U-4914

Feasibility Study

Improvements to NC 150
From West of NC 115 to the NC 150 / NC 152 Split

Town of Mooresville, Iredell County

Division 12
FS-0212A

Feasibility Studies Unit
Program Development Branch
N.C. Department of Transportation

Documentation Prepared by Stantec Consulting Services Inc.

G. Scott Boyles, PE
Project Manager, Stantec

Derrick W. Lewis, PE
Feasibility Studies Unit Head
NCDOT

Nicole M. Hackler
Feasibility Studies Engineer
NCDOT

9/20/2005
Date

Improvements to NC 150
From West of NC 115 to the NC 150/NC 152 Split

Town of Mooresville, Iredell County

FS-0212A

I. General Description

This feasibility study addresses the proposed multi-lane improvements to NC 150 from just west of NC 115 to the NC 150 / NC 152 split in Iredell County. The current cross section of this existing 2.8 mile facility varies from a short three-lane section at NC 115 to two 12-foot lanes with paved shoulders that vary from zero to two feet in width. Where the alignment runs concurrently with NC 152, the lane widths drop to 11-feet. Exhibit 1 shows the study segment of NC 150 which is located on the north side of Mooresville.

The roadway traverses relatively flat terrain and is lined with low density industrial and commercial development and several residential subdivisions. Existing traffic volumes approach or exceed the capacity of a two-lane road. Substantial growth is anticipated along this corridor and the associated traffic projections well exceed two-lane capacity. Therefore, the improvements discussed in this report are intended to increase safety and capacity by providing additional lanes and improved intersection configurations.

This study is the initial step in the planning and design process for this project and is not the product of exhaustive environmental or design investigations. The purpose of this study is to describe the proposed project, including costs, and to identify potential problems that should be considered in the planning and design phases.

II. Need for Project

The purpose of the project is to increase the safety and traffic capacity along the previously described segment of NC 150. For the study segment, NC 150 is classified as a minor arterial from the Mooresville City limits to NC 152 according to the North Carolina Statewide Functional Classification System. Inside the City limits it is not classified on the state system. The majority of the study section is currently a two-lane shoulder facility with eleven unsignalized intersections, four signalized intersections, and several commercial driveway entrances. The existing right-of-way is estimated to be approximately 100 feet with no access control.

The existing alignment is for the most part relatively straight, but has several driveways and unsignalized intersections that are associated with a lack of access control. The posted speed limit is 45 mph.

The unsignalized intersections along NC 150 include: Cascade Road, Goodwin Circle (SR 2445), Jennifer Jollies Drive, Anna's Grace Drive, Flowering Grove Lane, Cherry Grove Drive, Wiggins Road (SR 2399), NC 152 (two intersections), Alexander Acres, and Oak Meadow

The signalized intersections along NC 150 include: NC 115, Overhead Bridge Road (SR 2397), US 801, and Wiggins Road (SR 2399).

Land use along the corridor is composed of a mixture of isolated residences, subdivisions, light industry, and commercial properties. The densest development occurs at the NC 115 intersection where the existing five-lane section is lined on both sides by commercial and highway retail development. Anticipated growth along the corridor includes a programmed intermediate school scheduled to open in 2005. The Charlotte Area Transit System North Corridor Plan includes a transit station on NC 115 just east of NC 150 which would also serve as a park and ride location. Improving NC 150 would facilitate vehicular access to this potential site.

NC 150 crosses an abandoned railroad line immediately east of NC 115. It then crosses an active Norfolk Southern railroad line, carrying 2 trains per day, east of Goodwin Circle (SR 2445) via an at-grade intersection. There are no bridges along this section of NC 150. There are three culverts in this section. Two are 60-inch pipes located just east of Goodwin Circle (SR 2445) and just west of Overhead Bridge Road (SR 2397), respectively. Tributaries to Back Creek flow through each of these pipes. The third is a triple barrel reinforced concrete box culvert located east of US 801 which carries Back Creek beneath NC 150.

There are no programmed improvements in the 2006-2012 TIP in the immediate vicinity of this project.

An accident analysis was conducted for the study section of NC 150 for the period of June 1, 2000 through May 31, 2003. The results for this three year period included 97 reported crashes consisting of no fatal crashes, 54 non-fatal injury crashes, and 43 property damage only crashes. The total crash rate for the studied section of roadway is 290.47 crashes per 100 million vehicle miles which is substantially higher than the 2000-2002 Statewide crash rate of 123.32 for two-lane rural NC Routes.

The most predominant crash types were the "rear-end/slow/stop", the "left turn from different roadways", and "collisions with fixed objects." The "rear-end/slow/stop" collision was by far the most frequent and is indicative of a lack of turn lanes to separate vehicles waiting to make left turns from those moving through the corridor. Considering the fact that this corridor is lined with access points and that both the traffic volumes and amount of access is anticipated to increase substantially through the design period, continued high accident rates can be expected to occur. Provision of additional lanes and storage for left and right turning movements should substantially decrease the potential for accidents along this corridor.

III. Traffic Operations

The base year (2003) Average Annual Daily Traffic (AADT) along NC 150 is estimated to range between 10,600 vehicles per day (vpd) and 19,800 vpd. For the future year 2030, the estimated traffic volumes will range from 24,800 vpd to 44,000 vpd. Truck traffic is estimated to make up between nine and thirteen percent of daily traffic.

Traffic analyses were conducted for both signalized and unsignalized intersections along the corridor for which traffic projections are available. The following intersections with NC 150 were analyzed: NC 115, Goodwin Circle (SR 2445), Overhead Bridge Road (SR 2397), NC 801, and Wiggins Road (SR 2399).

For the 2003 base conditions, the intersection of NC 150 and NC 115 and the intersection of NC 150 and Overhead Bridge Road (SR 2397) operate at unacceptable levels of service

(LOS E or F) during the AM and PM peak hours. The remaining intersections operate at a LOS D or better during the AM and PM peak hours.

Because traffic volumes for the typical design year of 2030 were approaching the limits of acceptable capacity for a four-lane divided facility, specifically in the vicinity of the NC 115 intersection, the traffic analysis was conducted for a design year of 2035. The traffic forecast was revised from a 2030 design year to a 2035 design year through straight-line extrapolation. The result of the 2035 No-build scenario is level of service (LOS) F at all intersections with over 600 seconds of delay at the intersection of NC 150 and NC 115.

To improve operations, concepts were developed that would bring each intersection to a LOS D or better for projected 2035 traffic conditions. Prior to developing the alternatives described in the next section of this report, standard intersection improvements (e.g. addition of exclusive turn lanes) were evaluated. These improvements, combined with widening to a four-lane divided facility, were found to be effective at all intersections except for the intersection of NC 150 with NC 115.

Due to the heavy traffic volumes at the NC 115 intersection, four eastbound and four westbound through lanes, in addition to exclusive right and left turn lanes at each approach, would be necessary to obtain a LOS D in the design year 2035. In order to safely transition this eight-lane divided section back down to a four-lane divided section, and avoid a false capacity situation, a substantial amount of additional widening along NC 150 would be necessary. To avoid the additional right-of-way and impacts associated with this widening, the alternatives described in the following section incorporate one of two concepts at the NC 115 intersection. The concepts are either the inclusion of an interchange at NC 115, or the restriction of northbound and southbound left turns from NC 115 to NC 150.

IV. Alternatives

For the majority of the project, two through lanes in each direction with accommodations for turning vehicles are warranted by the traffic projections. Due to the rural low-density character along most of the roadway, sidewalks are not included in the recommended cross section. Therefore, a four-lane divided section with a 23-foot raised median was evaluated. For cost estimate purposes, a five-lane section was also evaluated and is included in the cost comparison table. Four alternatives, based on options at the NC 115 intersection and the railroad crossing, were investigated. The attached exhibits show the typical cross sections and plan view conceptual designs for the alternatives. Each of the alternatives are described below:

Alternative A – Alternative A begins at the five-lane section approximately 1,300 feet west of NC 115. Just west of Agape Drive, a median is proposed which continues east throughout the project. With the exception of the NC 115 intersection, the project will be a four-lane divided section with median openings at intersections. Because the highest traffic volumes along the study corridor occur at the NC 115 intersection, the proposed improvements transition to three through lanes in each direction through this intersection. In order to accommodate projected volumes at NC 115, it is proposed that the northbound and southbound left turns are eliminated from this intersection. The median will be extended into the intersection such that east- and westbound left turns are allowed, but left turns from NC 115 must make a right turn and U-turn. To accommodate the U-turn, bulb-outs are proposed adjacent to the first median break on either side of NC 115. By eliminating these left turns, the intersection is able to provide an acceptable LOS for the 2035 traffic flow.

The proposed improvements continue to the east where the project crosses the Norfolk Southern Railroad with an at-grade crossing. The alignment continues east through SR 2397, US 801 and SR 2399 before tying in to NC 152. The project runs concurrently with US 152 for a short distance before the routes split. East of the split, the improvements transition back down to existing two-lane sections along both NC 150 and NC 152. The proposed right-of-way width along the corridor is 150 feet. This alternative includes three stream crossings; two requiring extensions of 60-inch pipes, the third requiring extension of an existing triple barrel culvert (3 @ 12-feet x 10-feet).

Alternative B – Alternative B follows the same alignment as Alternative A. The only distinction between Alternatives A and B is that Alternative B includes a bridge over the Norfolk Southern Railroad. This structure provides a grade separation to increase safety by eliminating potential train-vehicle conflicts. Additional impacts associated with building up the slopes to this structure are primarily associated with providing access to nearby properties. The proposed right-of-way width along the corridor is 150 feet.

Alternative C – Alternative C follows the same alignment as Alternative A. The only distinction between Alternatives A and C is that Alternative C includes a half-cloverleaf interchange with NC 115 versus an at-grade intersection. All of the movements for the half-clover are proposed west of NC 115 so that they do not impact the abandoned railroad line. This interchange will improve traffic flow on NC 150 and provide a grade separation (dual bridges) over the abandoned rail line, which will be beneficial should rail service ever be restored to this line.

NC 150, through the controlled access portion, would require two through lanes in each direction. The remaining portion of NC 150 would provide two travel lanes and exclusive right- and left-turn lanes for east- and westbound NC 150. The proposed improvements for Alternative C include an at-grade crossing of the Norfolk Southern Railroad east of SR 2445. The proposed right-of-way width along the corridor is 150 feet. The right-of-way width is substantially greater at NC 115 to accommodate the proposed interchange.

Additional impacts associated with the footprint of the interchange are commercial properties in the northwest and southwest quadrants. In addition, two signalized intersections would be required along NC 115 versus the single existing signalized intersection. It is recommended that these signals be coordinated.

Alternative D – Alternative D follows the same alignment as Alternative A and includes both the railroad grade separation discussed in Alternative B and the half-cloverleaf interchange proposed in Alternative C. The proposed right-of-way width along the corridor is 150 feet. The right-of-way width is substantially greater at NC 115 to accommodate the proposed interchange.

The estimated relocations and cost breakdowns for the four alternatives are listed in the table on the following page.

V. Recommendations

As described in Section IV, there are four alternatives for this project. In addition, options of a four-lane divided versus a five-lane cross section were developed for cost comparison purposes. Because it would provide a safer facility and is considered feasible based on the existing access conditions, the four-lane divided cross section is recommended. All subsequent discussion of alternatives, therefore, assumes a four-lane divided section.

TABLE: COST COMPARISON OF ALTERNATIVES

		Alternative A	**Alternative B (Recommended)**	Alternative C	Alternative D
Major Design Features					
		• Restricted Lefts at NC 115 • At-grade RR X-ing	• Restricted LT's at NC 115 • Grade separated RR X-ing	• Interchange at NC 115 • At-grade RR X-ing	• Interchange at NC 115 • Grade separated RR X-ing
Relocations					
	Residences	3	3	3	3
	Businesses	3	3	19	19
Cost Estimates					
	Construction (4-lane divided)	$ 14,200,000	**$ 17,600,000**	$ 22,100,000	$ 24,100,000
	Construction (5-lane)	$ 13,800,000	$ 16,600,000	$ 21,400,000	$ 23,200,000
	Right-of-way	$ 8,300,000	**$ 8,300,000**	$ 19,600,000	$ 19,600,000
	TOTAL COST (4-lane divided)	$ 22,500,000	**$ 25,900,000**	$ 41,700,000	$ 43,700,000
	TOTAL COST (5-lane)	$ 22,100,000	$ 24,900,000	$ 41,000,000	$ 42,800,000

Alternative A was eliminated because it does not include a grade separation over the Norfolk Southern Rail line. Based on the exposure index at this crossing, a grade separation is warranted and construction is considered reasonable.

Alternative B, which includes an at-grade intersection with NC 115 and a grade separation over the Norfolk Southern Railroad line is the recommended alternative. Alternative B is proposed as a four-lane divided facility with a 23-foot raised median to allow for left-overs. The proposed right-of-way width along the corridor is 150 feet.

Alternatives C and D were not recommended due to the impacts and costs associated with the interchange at NC 115. The inclusion of an interchange will add 16 business relocations to the anticipated impacts of the project. Because design year traffic operations are acceptable with an at-grade signalized intersection as described previously, an interchange at NC 115 is not recommended.

In order to accommodate projected volumes at NC 115, it is proposed that the northbound and southbound left turns are eliminated from this intersection. The median will be extended into the intersection such that east-and westbound left turns are allowed, but left turns from NC 115 must make a right turn and U-turn. To accommodate the U-turn, bulb-outs are proposed adjacent to the first median break on either side of NC 115.

Based on the cost, impact to commercial properties, and fact that the existing rail line running along NC 115 is abandoned, the interchange option is currently not recommended. In addition, a signalized intersection with configuration as shown on the attached exhibit will operate at a LOS D or better during design year 2035 traffic conditions. Should plans be developed in the future to restore rail service along this line, the interchange options should be re-evaluated.

The exposure index at the NC 150 crossing of the Norfolk Southern Railroad line east of Goodwin Circle (SR 2445) is 62,400 (2 trains/day x 31,200 vehicles/day) which is well above the threshold for considering a grade separation. The impacts associated with constructing a bridge at this location are also not substantial and are primarily associated with access to nearby properties. Therefore, a grade separation over the Norfolk Southern Rail line is recommended.

The recommended Improvements (Alternative B) have a total estimated cost for construction and right-of-way of $25,900,000. In summary the recommended improvements and associated cost estimate include:

- Construction of a 4-lane divided facility with a 23-foot median from just west of NC 115 to the NC 152 split.
- A short six-lane section with a median that restricts northbound and southbound left turns at the NC 115 intersection.
- A proposed grade separation over the Norfolk Southern Railroad line east of Goodwin Circle (SR 2445).
- Extension of two 60-inch pipe culverts located just east of Goodwin Circle (SR 2445) and just west of Overhead Bridge Road (SR 2397), respectively.
- Extension of an existing triple barrel (3 @ 12-feet x 10-feet) culvert.

At the west terminus, the improvements described above will transition back to the existing five-lane section between Agape Drive and Emerson Drive. At the east terminus of the project, the improvements transition to the existing two-lane roadways of NC 150 and NC 152 just east of their respective split. Transitions to the existing cross sections will occur by a combination of tapers and conversion to exclusive turn lanes.

VI. Additional Comments

An exhaustive environmental screening was not conducted for this study. However, the following information summarizes conclusions about the project study area based on existing data.

There is one property listed on the National Register of Historic Places within the western vicinity of the project study area, located at 601 Williams Street between the railroad and NC 115. This property was listed on November 24, 1980 and is a Late Victorian house that was built in 1904. The property encompasses 21 acres with two outbuildings. It is not anticipated that the proposed improvements will impact any portion of this property.

There is one archeological site within the project study area that is the site of a late 19th/early 20th century home. A previous archeological survey indicates that the site was most likely

burned prior to being razed. As a result, the site has little research potential and is not considered eligible for the National Register.

According to the Natural Heritage Program (NHP) GIS database, there is one federally protected species listed for Iredell County. Southern populations of the bog turtle (*Clemmys muhlenbergii*) are listed as "threatened due to similar appearance [T(S/A)]" to provide protection to the northern bog turtle populations, which are in decline due to illegal collection and habitat alteration. The northern populations range from New York and Massachusetts south to Maryland. The T(S/A) status of the bog turtle in North Carolina does not require Section 7 consultation. In addition, the NHP database does not contain any recorded occurrences of the bog turtle within the project study area, therefore no impacts to threatened or endangered species are anticipated.

National Wetlands Inventory (NWI) mapping indicates the presence of bottomland forest wetland systems along Back Creek and the unnamed tributary to Back Creek. US Geological Society (USGS) topographical mapping and NWI mapping also indicate the presence of several ponds in the vicinity of the project study area. None of the these areas are within the anticipated footprint of the improvements. However, it should be noted that once the area is delineated, there is the possibility that fringe wetlands may exist along Back Creek and its tributaries in the vicinity of the roadway crossings. No substantial wetland impacts are anticipated.

The proposed improvements include two crossings of Back Creek and one crossing of its unnamed tributary. One of the Back Creek crossings would require a major drainage structure extension. This location is an existing crossing where the box culvert would be extended on both sides to accommodate the widening. Back Creek lies within the Yadkin-Peedee River Basin (DWQ Subbasin 03-07-06) and is classified as a water supply water (WS-II) and high quality water (HQW). WS-II waters are sources of potable water in predominantly undeveloped watersheds. HQW is a supplemental classification intended to protect waters with quality higher than state water quality standards. WS-II waters are HQWs by definition. Downstream of the project area, Back Creek is classified as a Critical Area (CA) for drinking water supplies.

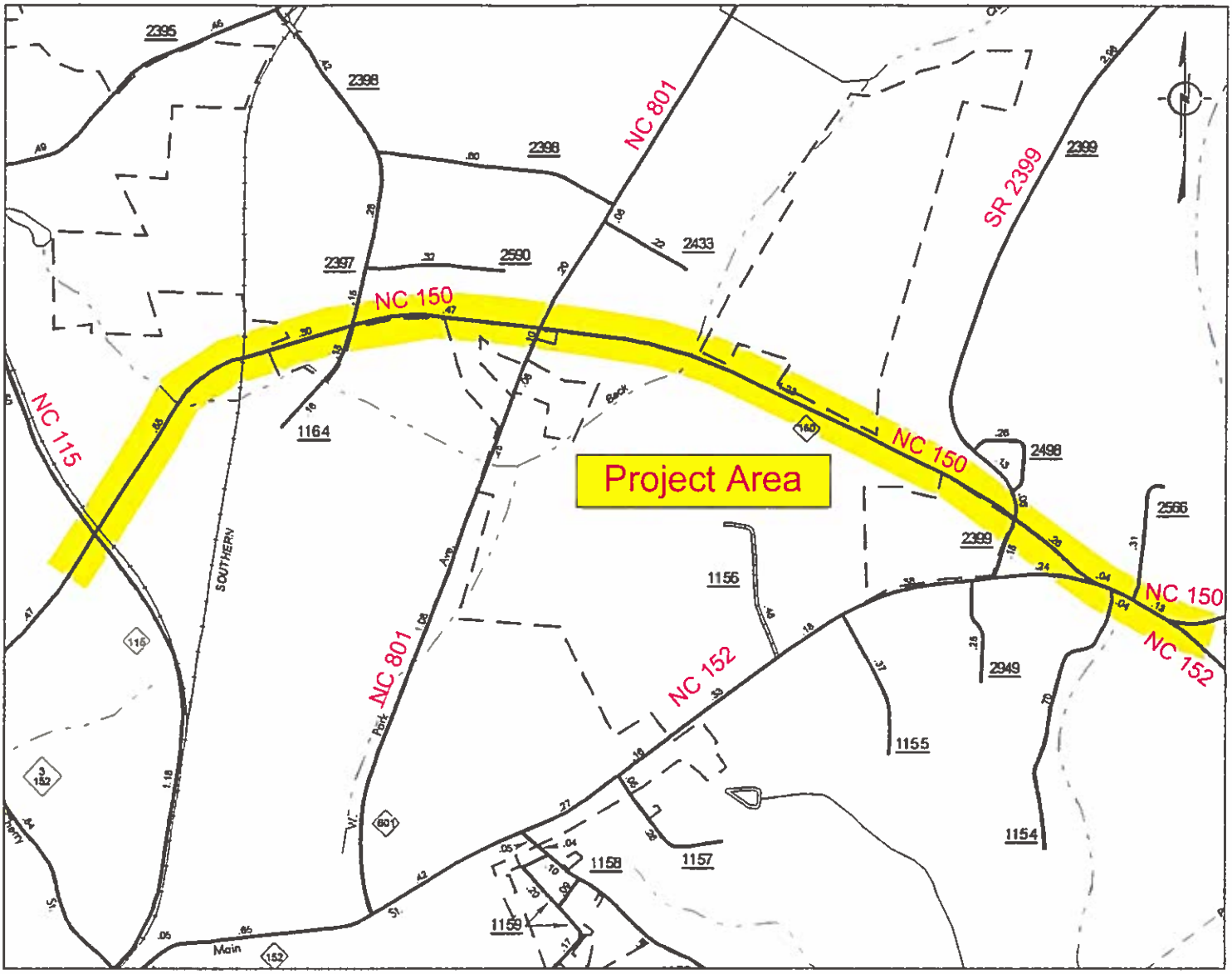

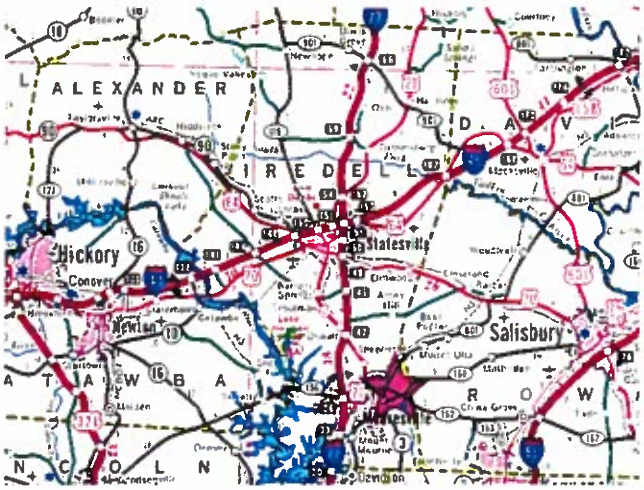

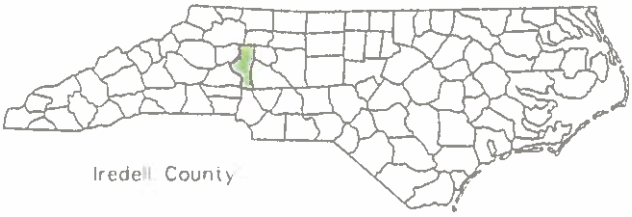

NC 150 Widening

NC 115 to NC 150/NC 152 Split - FS-0212A

Town of Mooresville, Iredell County, North Carolina

Project Location
NTS
Exhibit 1

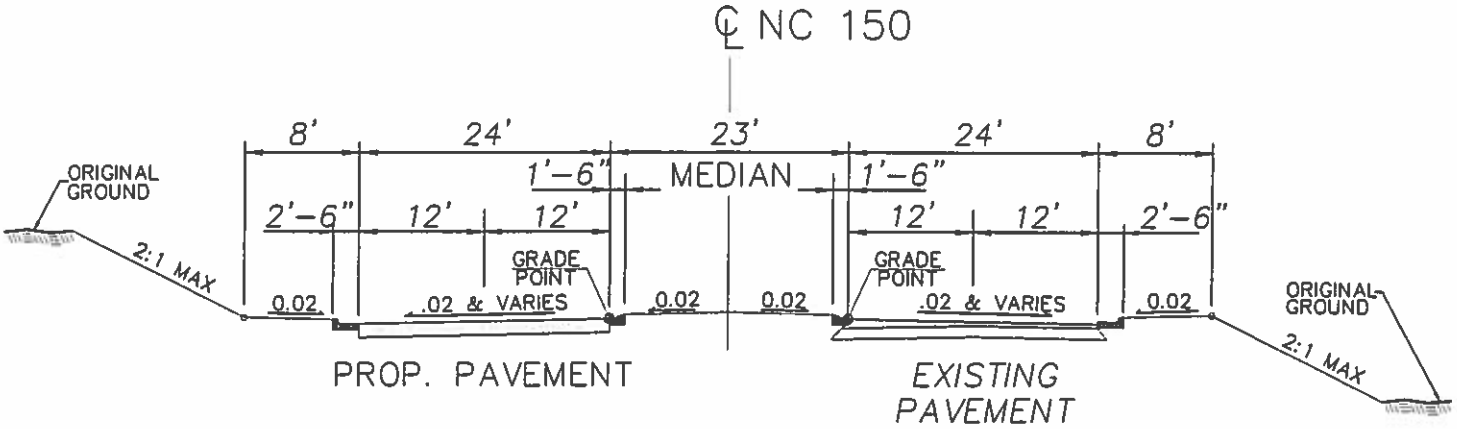

NC 115 TO NC 801

FOUR LANE DIVIDED SECTION
23' RAISED MEDIAN, CURB AND GUTTER

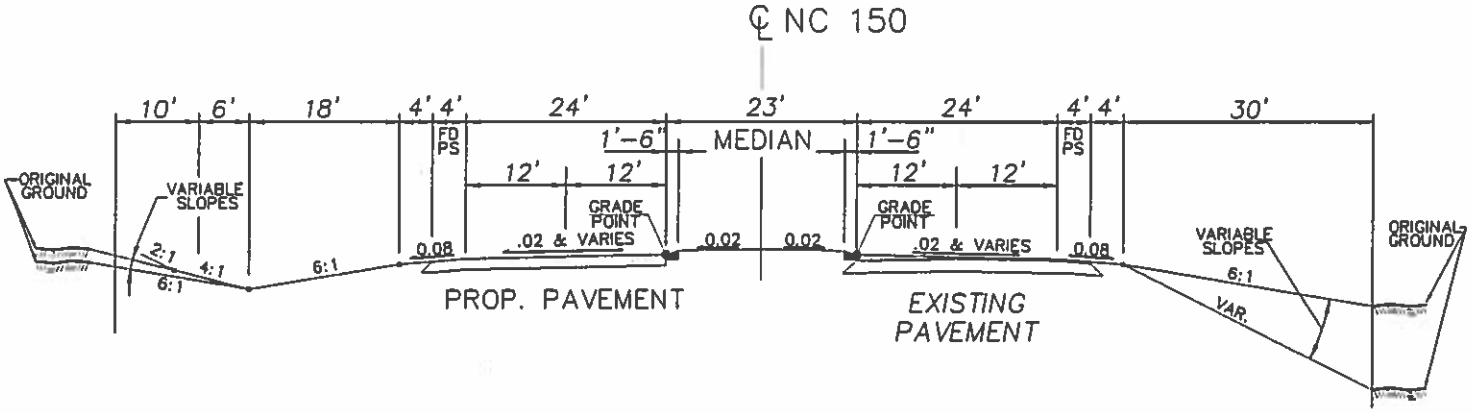

NC 801 TO 152 SPLIT

FOUR LANE DIVIDED SECTION
23' RAISED MEDIAN, SHOULDER SECTION

NC 150 Widening

NC 115 to NC 150/NC 152 Split - FS-0212A
Town of Mooresville, Iredell County, North Carolina

Typical Section
NTS
Exhibit 2

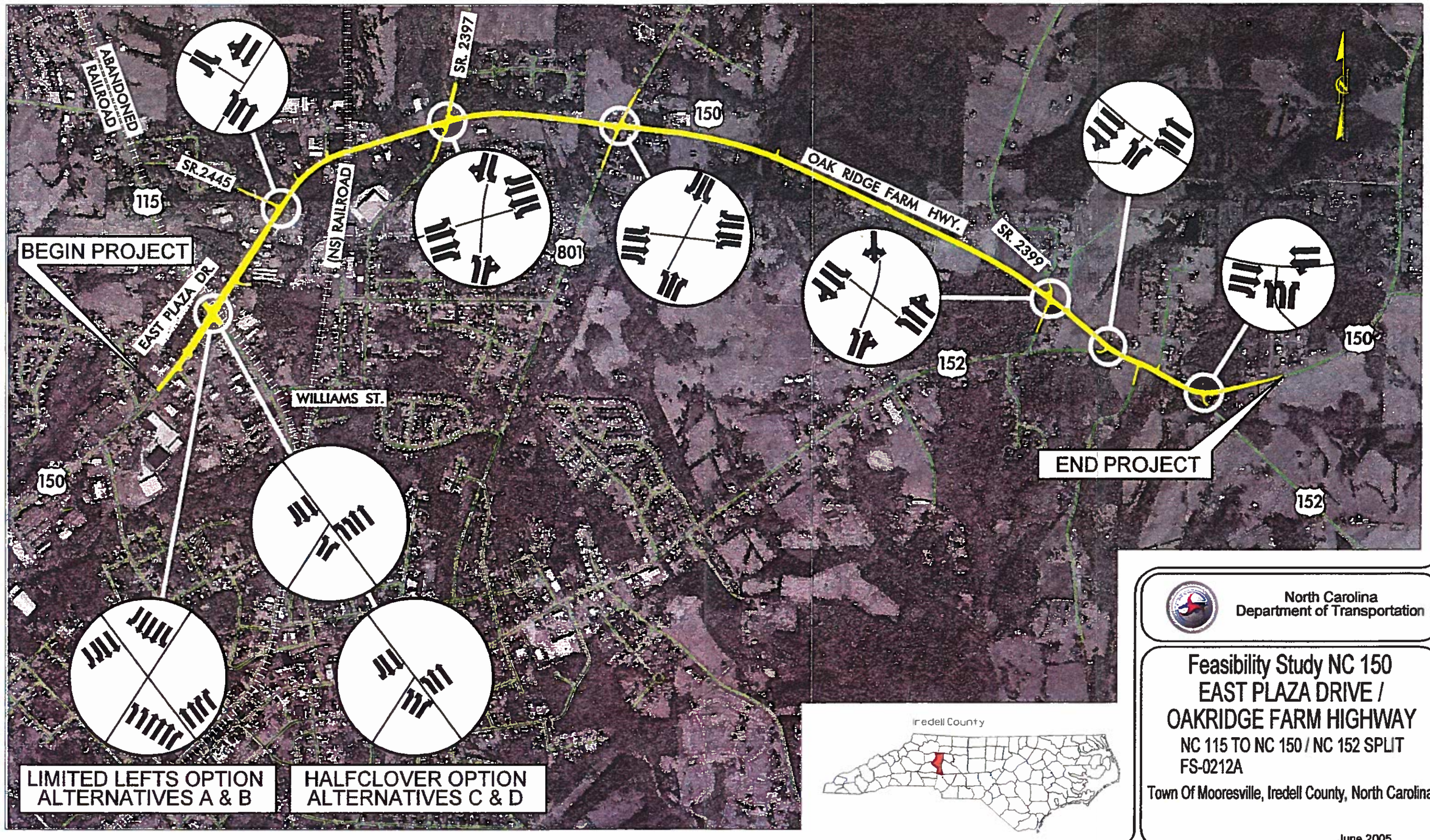

North Carolina
Department of Transportation

Feasibility Study NC 150
EAST PLAZA DRIVE / OAKRIDGE FARM HIGHWAY

NC 115 TO NC 150 / NC 152 SPLIT
FS-0212A

Town Of Mooresville, Iredell County, North Carolina

June 2005