NC DEPARTMENT OF TRANSPORTATION
DIVISION OF HIGHWAYS
STRUCTURE MANAGEMENT UNIT

ATTENTION: PARS ISSUED; VERTICAL CLEARANCE SKETCH UPDATED

Structure Safety Report

Routine Element Inspection - Contract

INSPECTION DATE: 02/12/2021

DIVISION: 14 **COUNTY:** HAYWOOD **STRUCTURE NUMBER:** 430243 **FREQUENCY:** 24 MONTHS

FACILITY CARRIED: I-40 **MILE POST:** 31.1

LOCATION: 3.8 MI.E.JCT.SR1660

FEATURE INTERSECTED: NC215

LATITUDE: 35° 33' 21.87" **LONGITUDE:** 82° 51' 4.55"

SUPERSTRUCTURE:

SUBSTRUCTURE:

SPANS: 3 SPANS. SEE SPAN PROFILE SHEET FOR SPAN DETAILS

☐ FRACTURE CRITICAL ☐ TEMPORARY SHORING ☐ SCOUR CRITICAL ☐ SCOUR PLAN OF ACTION

GRADES: (Inspector/NBI Coding) **DECK** 5 / 5 **SUPERSTRUCTURE** 5 / 5 **SUBSTRUCTURE** 5 / 5 **CULVERT** N / N

POSTED SV: Not Posted **POSTED TTST:** Not Posted

OTHER SIGNS PRESENT: NONE

LOOKING EAST

Sign noticed issued for		Number Required
NO	**WEIGHT LIMIT**	0
NO	**DELINEATORS**	0
NO	**NARROW BRIDGE**	0
NO	**ONE LANE BRIDGE**	0
NO	**LOW CLEARANCE**	0

DIRECTION OF INSPECTION W-E

DIRECTION MATCHES PLANS

INSPECTED BY	SIGNATURE	ASSISTED BY
Aaron Stroud	Aaron Stroud	David Ragan

NATIONAL BRIDGE INVENTROY ----- STRUCTURE INVENTORY AND APPRAISAL

03/22/2021

IDENTIFICATION

(1) STATE NAME NORTH CAROLINA BRIDGE **430243**
(8) STRUCTURE NUMBER (FEDERAL) **0870243**
(5) INVENTORY ROUTE (ON/UNDER) ON **111000400**
(2) STATE HIGHWAY DEPARTMENT DISTRICT **14**
(3) COUNTY CODE (FEDERAL) **87** (4) PLACE CODE **10240**
(6) FEATURE INTERSECTED **NC215**
(7) FACILITY CARRIED **I-40**
(9) LOCATION **3.8 MI.E.JCT.SR1660**
(11) MILEPOINT **31.1**
(12) BASE HIGHWAY NETWORK **1**
(13) LRS INVENTORY ROUTE & SUBROUTE **10040**
(16) LATITUDE **35° 33' 21.87"** (17) LONGITUDE **82° 51' 4.55"**
(98) BORDER BRIDGE STATE CODE PERCENT SHARED
(99) BORDER BRIDGE STRUCTURE NUMBER

STRUCTURE TYPE AND MATERIAL

(43) STRUCTURE TYPE MAIN **Steel**
TYPE **Stringer/Multi-beam or girder** CODE **302**
(44) STRUCTURE TYPE APPROACH
TYPE CODE
(45) NUMBER OF SPANS IN MAIN UNIT **3**
(46) NUMBER OF SPANS IN APPROACH **0**
(107) DECK STRUCTURE TYPE CODE **1**
(108)WEARING SURFACE/PROTECTIVE SYSTEM
(A) TYPE OF WEARING SURFACE CODE **6**
(B) TYPE OF MEMBRANE CODE **0**
(C) TYPE OF DECK PROTECTION CODE **0**

AGE AND SERVICE

(27) YEAR BUILT **1961**
(106) YEAR RECONSTRUCTED **1988**
(42) TYPE OF SERVICE ON - **Overpass Structure**
OFF - **Highway** CODE **61**
(28) LANES ON STRUCTURE **4** LANES UNDER STRUCTURE **3**
(29) AVERAGE DAILY TRAFFIC **56000**
(30) YEAR OF ADT **2019** (109) TRUCK ADT PCT **16**
(19) BYPASS OR DETOUR LENGTH **0.0**

GEOMETRIC DATA

(48) LENGTH OF MAXIMUM SPAN **52.0**
(49) STRUCTURE LENGTH **145.0**
(50) CURB OR SIDEWALK: LEFT **0.0** RIGHT **0.0**
(51) BRIDGE ROADWAY WIDTH, CURB TO CURB **68.0**
(52) DECK WIDTH OUT TO OUT **71.4**
(32) APPROACH ROADWAY WITH (W/ SHOULDERS) **69.0**
(33) BRIDGE MEDIAN **Closed median w/ non-mountable barriers** CODE **3**
(34) SKEW **15** (35) STRUCTURE FLARED **0**
(10) INVENTORY ROUTE MIN VERT CLEAR **999.9**
(47) INVENTORY ROUTE TOTAL HORIZ CLEAR **33.0**
(53) MIN VERT CLEAR OVER BRIDGE RDWY **999.9**
(54) MIN VERT UNDERCLEAR: REFERENCE **H** **15.1**
(55) MIN LAT UNDERCLEARANCE RT: REFERENCE **H** **2.5**
(56) MIN LAT UNDERCLEARANCE LT: **0.0**

NAVIGATION DATA

(38) NAVIGATION CONTROL - CODE **N**
(111) PIER PROTECTION CODE
(39) NAVIGATION VERTICAL CLEARANCE **0.0**
(116) VERT - LIFT BRIDGE NAV MIN VERT CLEAR **0.0**
(40) NAVIGATION HORIZONTAL CLEARANCE **0.0**

SUFFICIENCY RATING **77.00**
STATUS = **Functionally Obsolete**

CLASSIFICATION		CODE
(112) NBIS BRIDGE SYSTEM		**YES**
(104) HIGHWAY SYSTEM	**Inventory Route is on NHS**	**1**
(26) FUNCTIONAL CLASS	**Urban Principal Arterial - Interstate**	**11**
(100) STRAHNET HIGHWAY	**Interstate STRAHNET Route**	**1**
(101) PARALLEL STRUCTURE	**No parallel structure exists**	**N**
(102) DIRECTION OF TRAFFIC	**2-way traffic**	**2**
(103) TEMPORARY STRUCTURE		
(110) DESIGNATED NATIONAL NETWORK -	**on natiional network for trucks**	**1**
(20) TOLL	**On Free Road**	**3**
(21) MAINT -		**01**
(22) OWNER -		**01**
(37) HISTORICAL SIGNIFICANCE -		**5**

CONDITION	CODE
(58) DECK	**5**
(59) SUPERSTRUCTURE	**5**
(60) SUBSTRUCTURE	**5**
(61) CHANNEL & CHANNEL PROTECTION	**N**
(62) CULVERTS	**N**

LOAD RATING AND POSTING		CODE
(31) DESIGN LOAD	**H 20 + Mod**	**6**
(63) OPERATING RATING METHOD -	**Load Factor**	**1**
(64) OPERATING RATING -	**HS-38**	**68**
(65) INVENTORY RATING METHOD -		**1**
(66) INVENTORY RATING	**HS-23**	**41**
(70) BRIDGE POSTING	**No Posting Required**	**5**
(41) STRUCTURE OPEN, POSTED, OR CLOSED		**A**
DESCRIPTION	**Open, no restriction**	

APPRAISAL	CODE
(67) STRUCTURAL EVALUATION	**5**
(68) DECK GEOMETRY	**6**
(69) UNDERCLEARANCES, VERT & HORIZ	**3**
(71) WATERWAY ADEQUACY	**5**
(72) APPROACH ROADWAY ALIGNMENT	**6**
(36) TRAFFIC SAFETY FEATURES	**1111**
(113) SCOUR CRITICAL BRIDGES	**N**

PROPOSED IMPROVEMENTS

(75) TYPE OF WORK CODE
(76) LENGTH OF STRUCTURE IMPROVEMENT
(94) BRIDGE IMPROVEMENT COST
(95) ROADWAY IMPROVEMENT COST
(96) TOTAL PROJECT COST
(97) YEAR OF IMPROVEMENT COST ESTIMATE
(114) FUTURE ADT **112,000** YEAR OF FUTURE ADT **2040**

INSPECTION

(90) INSPECTION DATE **02/21** (91) FREQUENCY **24**
(92) CRITICAL FEATURE INSPECTION (93) CFI DATE
A) FRACTURE CRIT DETAIL A)
B) UNDERWATER INSP B)
C) OTHER SPECIAL INSP C)
SCOUR

Structure Number **430243** County **HAYWOOD** Run Date **03/22/2021**

Span Number	Facility Carried	Inventory Route	Maximum Minimum Vertical Clearance	Milepoint	Base Highway	LRS Inventory Route	Functional Classification	Number of Lanes	Average Daily Traffic	Year of Average Daily Traffic	Total Horizontal Clearance	*See Note Below*					STRAHNET Highway	Direction of Traffic	National Highway System	National Truck Network
												Reference Feature	Minimum Vertical Underclearance	Rigth Lateral Underclearance	Left Lateral Underclearance	Underclearance Appraisal Grade				
	7	5	10	11	12	13	26	28	29	30	47	54A	54	55	56	69	100	102	104	110
2	NC 215	31002150	16.3	0.0	0		16	3	12000	2016	42.3	H	15.1	2.5	3.8	3		2	☐	☐
2	NC 215	31002150	16.3		0		16	3	12000	2016	42.3	H	15.1	2.5		3	0	2	☐	☐

Note: Items 54, 55, and 56 are not reported FHWA under route data points but are collected for each under route to determine the minimum value for Underclearance Appraisal Item 69.

Superstructure Build Details

Span Number 1 **Span Length** 41.0000 **Skew** 105.0000

Number of Items	Type of Component	Element Name	Quantity		Protective System Applied	Quantity (Sq Ft)
2	Steel Rail	Metal Bridge Railing	82	Feet	Unknown	82
10	Movable Bearing	Movable Bearing	10	Each	Legacy Red Lead Primer Systems with Various Topcoats	20
10	Plate Girder	Steel Open Girder/Beam	410	Feet	Legacy Red Lead Primer Systems with Various Topcoats	3850
1	Reinforced Concrete Deck	Reinforced Concrete Deck	2929	Square Feet		
1	Asphalt Wearing Surface	Wearing Surface	2706	Square Feet		
10	Fixed Bearing	Fixed Bearing	10	Each	Legacy Red Lead Primer Systems with Various Topcoats	20
1	Concrete Railing	Reinforced Concrete Bridge Railing	41	Feet		

Span Number 2 **Span Length** 50.0000 **Skew** 105.0000

Number of Items	Type of Component	Element Name	Quantity		Protective System Applied	Quantity (Sq Ft)
10	Plate Girder	Steel Open Girder/Beam	500	Feet	Legacy Red Lead Primer Systems with Various Topcoats	4730
1	Reinforced Concrete Deck	Reinforced Concrete Deck	3571	Square Feet		
2	Steel Rail	Metal Bridge Railing	100	Feet	Unknown	100
10	Movable Bearing	Movable Bearing	10	Each	Legacy Red Lead Primer Systems with Various Topcoats	20
1	Standard Joint	Pourable Joint Seal	0	Feet		
10	Fixed Bearing	Fixed Bearing	10	Each	Legacy Red Lead Primer Systems with Various Topcoats	20
1	Asphalt Wearing Surface	Wearing Surface	3300	Square Feet		
1	Concrete Railing	Reinforced Concrete Bridge Railing	50	Feet		

Span Number 3 **Span Length** 54.0000 **Skew** 105.0000

Number of Items	Type of Component	Element Name	Quantity		Protective System Applied	Quantity (Sq Ft)
1	Asphalt Wearing Surface	Wearing Surface	3564	Square Feet		
10	Fixed Bearing	Fixed Bearing	10	Each	Legacy Red Lead Primer Systems with Various Topcoats	20

Superstructure Build Details

2	Steel Rail	Metal Bridge Railing	108	Feet	Unknown	108
10	Plate Girder	Steel Open Girder/Beam	540	Feet	Legacy Red Lead Primer Systems with Various Topcoats	5080
1	Reinforced Concrete Deck	Reinforced Concrete Deck	3857	Square Feet		
10	Movable Bearing	Movable Bearing	10	Each	Legacy Red Lead Primer Systems with Various Topcoats	20
1	Standard Joint	Pourable Joint Seal	0	Feet		
1	Concrete Railing	Reinforced Concrete Bridge Railing	54	Feet		

Structure Element Scoring

Structure Number: **430243**

Inspection Date **2/12/2021**

Element Number	Parent Number	Element Name	Location	Total Quantity	Level 1 Quantity	Level 2 Quantity	Level 3 Quantity	Level 4 Quantity
12	0	Reinforced Concrete Deck	Deck	10357	8594	1528	235	0
107	0	Steel Open Girder/Beam	Beam	1450	1	1403	42	4
515	107	Steel Protective Coating	Beam	13660	285	13290	1	84
205	0	Reinforced Concrete Column	Piles and Columns	8	5	0	3	0
215	0	Reinforced Concrete Abutment	Abutments	136	106	14	16	0
220	0	Reinforced Concrete Pile Cap/Footing	Footing	10	10	0	0	0
225	0	Steel Pile	Piles and Columns	28	28	0	0	0
234	0	Reinforced Concrete Pier Cap	Caps	294	157	10	127	0
301	0	Pourable Joint Seal	Expansion Joints	0	0	0	0	0
311	0	Movable Bearing	Bearing Device	30	0	7	23	0
515	311	Steel Protective Coating	Bearing Device	60	0	0	14	46
313	0	Fixed Bearing	Bearing Device	30	12	4	14	0
515	313	Steel Protective Coating	Bearing Device	60	27	0	5	28
330	0	Metal Bridge Railing	Bridge Rail	290	253	18	19	0
515	330	Steel Protective Coating	Bridge Rail	290	290	0	0	0
331	0	Reinforced Concrete Bridge Railing	Bridge Rail	145	0	145	0	0
510	0	Wearing Surface	Wearing Surfaces	9570	9356	2	212	0

Summary of Maintenance Needs

Maintenance By Defect

Structure Number: **430243** Inspection Date: **02/12/2021**

MMS Code	Element Name	Defect Name	Recommended Quantity
3326	Reinforced Concrete Deck	Cracking (RC and Other)	24 Square Feet
3326	Reinforced Concrete Deck	Exposed Rebar	30 Square Feet
3326	Reinforced Concrete Deck	Patched Areas	188 Square Feet
3326	Reinforced Concrete Deck	Delamination/Spall	33 Square Feet
3314	Steel Open Girder/Beam	Corrosion	65 Feet
3314	Steel Open Girder/Beam	Damage	2 Feet
3348	Reinforced Concrete Column	Cracking (RC and Other)	4 Each
3348	Reinforced Concrete Column	Delamination/Spall	29 Each
3350	Reinforced Concrete Abutment	Exposed Rebar	1 Feet
3350	Reinforced Concrete Abutment	Delamination/Spall	16 Feet
3350	Reinforced Concrete Abutment	Cracking (RC and Other)	1 Feet
3348	Reinforced Concrete Pier Cap	Patched Area	1 Feet
3348	Reinforced Concrete Pier Cap	Damage	1 Feet
3348	Reinforced Concrete Pier Cap	Exposed Rebar	9 Feet
3348	Reinforced Concrete Pier Cap	Delamination/Spall	176 Feet
3334	Movable Bearing	Corrosion	23 Each
3334	Fixed Bearing	Corrosion	14 Each
3322	Metal Bridge Railing	Damage	37 Feet
2816	Wearing Surface	Patched Area/Pothole (Wearing Surface)	2 Square Feet
2816	Wearing Surface	Crack (Wearing Surface)	210 Square Feet
3342	Steel Protective Coating	Effectiveness (Steel Protective Coatings)	13467 Square Feet

Element Structure Maintenance Quantities

Structure Number: **430243** Inspection Date **02/12/2021**

Location	MMS Code	Description	Maint Quantity	Total Quantity	Severe Quantity	Poor Quantity	Fair Quantity	Good Quantity
Abutments	3350	Maintenance of Concrete Wings and Wall	18	136	0	16	14	106
Beam	3314	Maintenance Steel Superstructure Components	67	1450	4	42	1403	1
Beam	3342	Clean and Paint Steel	13374	13660	84	1	13290	285
Bearing Device	3334	Bridge Bearing	37	60	0	37	11	12
Bearing Device	3342	Clean and Paint Steel	93	120	74	19	0	27
Bridge Rail	3318	Maintenance of Concrete Bridge Rail	0	145	0	0	145	0
Bridge Rail	3322	Maintenance of Steel Bridge Rail	37	290	0	19	18	253
Bridge Rail	3342	Clean and Paint Steel	0	290	0	0	0	290
Caps	3348	Maintenance of Concrete Substructure	187	294	0	127	10	157
Deck	3326	Maintenance of Concrete Deck	275	10357	0	235	1528	8594
Expansion Joints	3310	Maintenance of Standard Bridge Expansion Joints	0	0	0	0	0	0
Footing	3348	Maintenance of Concrete Substructure	0	10	0	0	0	10
Piles and Columns	3348	Maintenance of Concrete Substructure	33	8	0	3	0	5
Piles and Columns	3354	Maintenance of Steel Substructure Components	0	28	0	0	0	28
Wearing Surfaces	2816	Asphalt Surface Repair	212	9570	0	212	2	9356

Priority Actions Request

Structure Number **430243**

Span1

3314 **Beam 1** Plate Girder

Priority Level	Defect Type	Quantity	Defect Description
2	Corrosion	8	Span 1 Beam 1: CORROSION ON BOTTOM FLANGE, LOWER 4" OF WEB AND BEARING STIFFENER AT BENT 1 IN BAY 1 FOR 8 FT WITH SECTION LOSS. BOTTOM FLANGE HAS 7/16" SECTION REMAINING ACROSS FULL WIDTH OF FLANGE. WEB HAS 7/16" SECTION REMAINING FOR 5 FT. BEARING STIFFENER HAS 3/16" SECTION REMAINING ACROSS FULL BEARING AND UP 2.5", PAR

3314 **Beam 10** Plate Girder

Priority Level	Defect Type	Quantity	Defect Description
2	Corrosion	4	Span 1 Beam 10: CORROSION ON BOTTOM FLANGE AND WEB AT BENT 1 WITH SECTION LOSS FOR 4 FT. SECTION LOSS IN WEB UP TO 100% WITH A HOLE, 2" WIDE X 1/2" HIGH UNDER BENT DIAPHRAGM. BOTTOM FLANGE HAS 11/16" SECTION REMAINING OVER 4 FT AT BENT 1 ACROSS FULL WIDTH OF FLANGE, PAR
2	Corrosion	1	Span 1 Beam 10: CORROSION ON LEFT SIDE OF BOTTOM FLANGE AT END BENT 1 WITH SECTION LOSS, 6" LONG X FULL WIDTH OF FLANGE WITH 7/16" THICKNESS REMAINING, PAR
2	Corrosion	5	Span 1 Beam 10: CORROSION ON OUTSIDE FACE OF WEB AT END BENT 1 FOR 30" LONG X 12" HIGH THEN 24" LONG X 6" HIGH WITH SECTION LOSS UP TO 5/16" SECTION REMAINING IN WEB, PAR
2	Corrosion	1	Span 1 Beam 10: CORROSION WITH SECTION LOSS IN WEB AT BENT 1 BEHIND BEARING STIFFENER, 8" X 8" WITH UP TO 100% SECTION LOSS FOR 4" X 1/4", PAR

Span3

3314 **Beam 5** Plate Girder

Priority Level	Defect Type	Quantity	Defect Description
2	Corrosion	2	Span 3 Beam 5: CORROSION ON BOTTOM FLANGE FOR 2 FT AT BENT 2 WITH SECTION LOSS, BOTTOM FLANGE HAS 3/8" SECTION REMAINING FOR FULL WIDTH OF BOTTOM FLANGE, PAR
2	Corrosion	1	Span 3 Beam 5: CORROSION ON NORTH AND SOUTH BEARING STIFFENER AT BENT 2 WITH 5/16" SECTION REMAINING FOR LOWER 1" ACROSS BOTH STIFFENERS, PAR

Bent 1

3348 **Cap 1** Reinforced Concrete Pier Cap

Priority Level	Defect Type	Quantity	Defect Description
2	Delamination/Spall	9	Bent 1 Cap 1: SPALL, 9 FT X 15" X 1 FT ON EAST FACE OF CAP ON TOP UNDER GIRDER 1 WITH EXPOSED REBAR WITH UP TO 10% SECTION LOSS OF ONE MAIN REINFORCING BAR, PAR
2	Exposed Rebar	9	Bent 1 Cap 1: SPALL, 9 FT X 15" X 1 FT ON WEST FACE OF CAP ON TOP UNDER GIRDER 1 WITH EXPOSED REBAR WITH UP TO 10% SECTION LOSS OF ONE MAIN REINFORCING BAR, PAR

? Priority Action Request (PAR) 1 Assigned Routine Maintenance 2 Assigned Priority Maintenance 3 Assigned Critical Find

Priority Actions Request

Structure Number **430243**

2	Patched Area	1	Bent 1 Cap 1: UNSOUND PATCH ON SOUTH FACE, DELAMINATED FULL HEIGHT X FULL WIDTH WITH 1" CRACKING THROUGHOUT EXTENDING 18" ON WEST FACE AND 12" ON EAST FACE, PAR

Bent 2

3348 **Cap 1** Reinforced Concrete Pier Cap

Priority Level	Defect Type	Quantity	Defect Description
2	Delamination/Spall	6	Bent 2 Cap 1: SPALLED/DELAMINATED AREA, 6 FT X 18" X 1 FT ON EAST FACE OF CAP AT TOP WITH EXPOSED REBAR WITH UP TO 5% SECTION LOSS IN MAIN REINFORCEMENT, PAR

? Priority Action Request (PAR) 1 Assigned Routine Maintenance 2 Assigned Priority Maintenance 3 Assigned Critical Find

Element Condition and Maintenance Data

Structure Number: **430243** Inspection Date: **02/12/2021**

Span 1 Deck

Reinforced Concrete Deck

Element Number	Element Name	Total Qty	CS1 Qty	CS2 Qty	CS3 Qty	CS4 Qty	
12	Reinforced Concrete Deck	2,929	2,446	296	187	0	Square Feet

Element Number	Defect Type	Defect Description	CS	CS Qty	Maint Qty	
12	Delamination/Spall	DELAMINATION, 1 FT X 6" IN NORTH OVERHANG/DIAPHRAGM AT BENT 1 WITH RUST STAINING	3	1	1	Square Feet
12	Delamination/Spall	SPALL WITH EXPOSED REBAR, 18" X 18" X 3" DEEP ON UNDERSIDE OF RIGHT OVERHANG, 15 FT FROM BENT 1	3	3	3	Square Feet
12	Delamination/Spall	SPALL WITH EXPOSED REBAR, 22" X 7" X 1" DEEP ON UNDERSIDE OF DECK IN BAY 6, 10 FT FROM END BENT 1 WITH NO MEASUREABLE SECTION LOSS	3	2	2	Square Feet
12	Delamination/Spall	SPALL, 18" X 18" X 2" DEEP ON UNDERSIDE OF NORTH OVERHANG WITH EXPOSED REBAR, NEAR END BENT 1, NO SECTION LOSS	3	4	4	Square Feet
12	Delamination/Spall	SPALL, 18" X 6" X 4" DEEP IN UNDERSIDE OF SOUTH OVERHANG NEAR BENT 1 WITH EXPOSED REBAR, NO SECTION LOSS	3	2	2	Square Feet
12	Delamination/Spall	SPALL, 6" X 3" X 1.5" DEEP ON UNDERSIDE OF NORTH OVERHANG, 8 FT FROM END BENT 1 WITH EXPOSED REBAR, NO SECTION LOSS	3	1	1	Square Feet
12	Delamination/Spall	SPALL, 6" X 6" X 1.5" DEEP ON UNDERSIDE OF NORTH OVERHANG, 15 FT FROM END BENT 1 WITH EXPOSED REBAR, NO SECTION LOSS	3	1	1	Square Feet
12	Patched Areas	DELAMINATED PATCHES IN UNDERSIDE OF RIGHT OVERHANG FOR THE FULL LENGTH OF THE SPAN X FULL WIDTH OF OVERHANG	3	65	65	Square Feet
12	Patched Areas	PATCH, 2.5FT X 30 FT ON UNDERSIDE OF DECK IN BAY 8 ADJACENT TO BEAM 8. PATCH IS SOUND BUT HAS 4 TRANSVERSE HAIRLINE TRANSVERSE CRACKS WITH EFFLORESCENCE.	3	75	75	Square Feet
12	Patched Areas	SPALLED PATCHES IN UNDERSIDE OF RIGHT OVERHANG AT MIDSPAN 10 FT X 2 FT X UP TO 3" DEEP WITH EXPOSED REBAR, NO SECTION LOSS	3	20	20	Square Feet
12	Patched Areas	UNSOUND PATCH ON UNDERSIDE OF DECK IN BAY 5 AT BEAM 6, 12 FT FROM END BENT 1, 4 FT LONG X 1 FT WIDE	3	4	4	Square Feet
12	Patched Areas	UNSOUND PATCH, 36" X 28" ON UNDERSIDE OF DECK IN BAY 9 NEAR MIDSPAN WITH HAIRLINE CRACKS THROUGHOUT AND A DELAMINATION, 10" X 5".	3	9	9	Square Feet
12	Cracking (RC and Other)	3 DIAGONAL HAIRLINE CRACKS UP TO 8 FT LONG IN UNDERSIDE OF DECK IN BAY 7 AT END BENT 1 WITH EFFLORESCENCE	2	24	24	Square Feet
12	Cracking (RC and Other)	HAIRLINE TRANSVERSE CRACKS WITH EFFLORESCENCE IN THE UNDERSIDE OF THE DECK, FULL WIDTH OF BAYS, ALL BAYS	2	200		Square Feet
12	Patched Areas	SOUND PATCH, UNDERSIDE OF BAY 2 AT BEAM 3, 1 FT WIDE X 12FT LONG ON BOTH SIDES OF BEAM. SIMILAR AT BEAM 4 AND 5.	2	72		Square Feet

General Comments

Span 1 Beam 1

Plate Girder

Element Number	Element Name	Total Qty	CS1 Qty	CS2 Qty	CS3 Qty	CS4 Qty	
107	Steel Open Girder/Beam	41	0	28	13	0	Feet
515	Steel Protective Coating	385	0	371	0	14	Square Feet

Element Number	Defect Type	Defect Description	CS	CS Qty	Maint Qty

107	**Corrosion**	**CORROSION ON BOTTOM FLANGE, LOWER 4" OF WEB AND BEARING STIFFENER AT BENT 1 IN BAY 1 FOR 8 FT WITH SECTION LOSS. BOTTOM FLANGE HAS 7/16" SECTION REMAINING ACROSS FULL WIDTH OF FLANGE. WEB HAS 7/16" SECTION REMAINING FOR 5 FT. BEARING STIFFENER HAS 3/16" SECTION REMAINING ACROSS FULL BEARING AND UP 2.5", PAR**	3	8	8	Feet
107	**Corrosion**	**CORROSION WITH SECTION LOSS ON BOTTOM FLANGE AND WEB OF BEAM AT END BENT 1. WEB SECTION IS FULL HEIGHT X 2" LONG AT BACKWALL TRANSITIONING TO 3 FT LONG X 3" HIGH X 9/16" SECTION REMAINING. BOTTOM FLANGE HAS SECTION LOSS FOR 5 FT LONG X FULL WIDTH OF FLANGE X 9/16" SECTION REMAINING AT END BENT BACKWALL**	3	5	5	Feet
107	**Damage**	**DELAMINATION IN END DIAPHRAGM OUTSIDE BEAM 1, 8" X 3" X 3"**	3			Feet
107	**Corrosion**	**CORROSION ON BOTTOM FLANGE AND WEB AT BENT 1 WITH NO MEASUREBALE SECTION LOSS**	2	2		Feet
107	**Corrosion**	**SURFACE CORROSION ON TOP FLANGE AT END BENT 1 FOR 2 FT LONG X FULL WIDTH OF FLANGE, NO MEASUREABLE SECTION LOSS**	2			Feet
107	**Corrosion**	**SURFACE CORROSION THROUGHOUT TOP OF EXTERIOR BOTTOM FLANGE FOR FULL LENGTH OF BEAM, SCATTERED FRECKLED RUST THROUGHOUT WEB, TOP FLANGE AND INSIDE BOTTOM FLANGE, NO MEASUREABLE SECTION LOSS**	2	26		Feet
515	**Effectiveness (Steel Protective Coatings)**	**PROTECTIVE SYSTEM FAILED AT BEARINGS, RESULTING IN CORROSION WITH SECTION LOSS**	4	14	14	Square Feet
515	**Effectiveness (Steel Protective Coatings)**	**PROTECTIVE SYSTEM DETERIORATING ALLOWING FRECKLED RUST.**	2	371	371	Square Feet

General Comments

Span 1 Beam 2

Plate Girder

Element Number	Element Name	Total Qty	CS1 Qty	CS2 Qty	CS3 Qty	CS4 Qty	
107	Steel Open Girder/Beam	41	0	41	0	0	Feet
515	Steel Protective Coating	385	285	100	0	0	Square Feet

Element Number	Defect Type	Defect Description	CS	CS Qty	Maint Qty	
107	**Corrosion**	**CORROSION ON BOTTOM FLANGE AND WEB AT BEAM ENDS WITH NO MEASUREABLE SECTION LOSS**	2			Feet
107	**Corrosion**	**SCATTERED AREAS OF FRECKLED RUST THROUGHOUT BOTTOM FLANGE, WEB AND TOP FLANGE**	2	41		Feet
515	**Effectiveness (Steel Protective Coatings)**	**PROTECTIVE SYSTEM DETERIORATING, ALLOWING SCATTERED AREAS OF FRECKLED RUST THROUGHOUT THE BEAM**	2	100	100	Square Feet

General Comments

Span 1 Beam 3

Plate Girder

Element Number	Element Name	Total Qty	CS1 Qty	CS2 Qty	CS3 Qty	CS4 Qty	
107	Steel Open Girder/Beam	41	0	41	0	0	Feet
515	Steel Protective Coating	385	0	385	0	0	Square Feet

Element Number	Defect Type	Defect Description	CS	CS Qty	Maint Qty	
107	**Corrosion**	**CORROSION ON BOTTOM FLANGE AND WEB AT BEAM ENDS WITH NO MEASUREABLE SECTION LOSS**	2			Feet
107	**Corrosion**	**SCATTERED AREAS OF FRECKLED RUST THROUGHOUT BOTTOM FLANGE, WEB AND TOP FLANGE**	2	41		Feet

515	**Effectiveness (Steel Protective Coatings)**	**PROTECTIVE SYSTEM DETERIORATING, ALLOWING SCATTERED AREAS OF FRECKLED RUST THROUGHOUT THE BEAM**	2	385	385	Square Feet

General Comments

Span 1 Beam 4

Plate Girder

Element Number	Element Name	Total Qty	CS1 Qty	CS2 Qty	CS3 Qty	CS4 Qty	
107	Steel Open Girder/Beam	41	0	41	0	0	Feet
515	Steel Protective Coating	385	0	385	0	0	Square Feet

Element Number	Defect Type	Defect Description	CS	CS Qty	Maint Qty	
107	**Corrosion**	**CORROSION ON BOTTOM FLANGE AND WEB AT BEAM ENDS WITH NO MEASUREABLE SECTION LOSS**	2			Feet
107	**Corrosion**	**SCATTERED AREAS OF FRECKLED RUST THROUGHOUT BOTTOM FLANGE, WEB AND TOP FLANGE**	2	41		Feet
515	**Effectiveness (Steel Protective Coatings)**	**PROTECTIVE SYSTEM DETERIORATING, ALLOWING SCATTERED AREAS OF FRECKLED RUST THROUGHOUT THE BEAM**	2	385	385	Square Feet

General Comments

Span 1 Beam 5

Plate Girder

Element Number	Element Name	Total Qty	CS1 Qty	CS2 Qty	CS3 Qty	CS4 Qty	
107	Steel Open Girder/Beam	41	0	41	0	0	Feet
515	Steel Protective Coating	385	0	385	0	0	Square Feet

Element Number	Defect Type	Defect Description	CS	CS Qty	Maint Qty	
107	**Corrosion**	**CORROSION ON TOP OF BOTTOM FLANGE ON RIGHT SIDE AT BENT 1, 6" X 11 FT LONG WITH CORROSION IN RIGHT SIDE OF WEB AT BOTTOM FLANGE, 11 FT LONG X 2" HIGH WITH NO MEASUREABLE SECTION LOSS**	2	11		Feet
107	**Corrosion**	**SCATTERED AREAS OF FRECKLED RUST THROUGHOUT BOTTOM FLANGE, WEB AND TOP FLANGE**	2	29		Feet
107	**Corrosion**	**SURFACE CORROSION PRESENT ON BEARING PLATES**	2	1		Feet
515	**Effectiveness (Steel Protective Coatings)**	**PROTECTIVE SYSTEM DETERIORATING, ALLOWING SCATTERED AREAS OF FRECKLED RUST THROUGHOUT THE BEAM**	2	385	385	Square Feet

General Comments

Span 1 Beam 6

Plate Girder

Element Number	Element Name	Total Qty	CS1 Qty	CS2 Qty	CS3 Qty	CS4 Qty	
107	Steel Open Girder/Beam	41	0	41	0	0	Feet
515	Steel Protective Coating	385	0	385	0	0	Square Feet

Element Number	Defect Type	Defect Description	CS	CS Qty	Maint Qty	
107	**Corrosion**	**CORROSION ON TOP OF BOTTOM FLANGE ON RIGHT SIDE AT BENT 1, 6" X 4 FT LONG WITH CORROSION IN RIGHT SIDE OF WEB AT BOTTOM FLANGE, 4 FT LONG X 3" HIGH WITH NO MEASUREABLE SECTION LOSS**	2			Feet
107	**Corrosion**	**SCATTERED AREAS OF FRECKLED RUST THROUGHOUT BOTTOM FLANGE, WEB AND TOP FLANGE**	2	41		Feet

515	**Effectiveness (Steel Protective Coatings)**	**PROTECTIVE SYSTEM DETERIORATING, ALLOWING SCATTERED AREAS OF FRECKLED RUST THROUGHOUT THE BEAM**	2	385	385	Square Feet

General Comments

Span 1 Beam 7

Plate Girder

Element Number	Element Name	Total Qty	CS1 Qty	CS2 Qty	CS3 Qty	CS4 Qty	
107	Steel Open Girder/Beam	41	0	41	0	0	Feet
515	Steel Protective Coating	385	0	385	0	0	Square Feet

Element Number	Defect Type	Defect Description	CS	CS Qty	Maint Qty	
107	**Corrosion**	**CORROSION ON BOTTOM FLANGE AND WEB AT BEAM ENDS WITH NO MEASUREABLE SECTION LOSS**	2			Feet
107	**Corrosion**	**SCATTERED AREAS OF FRECKLED RUST THROUGHOUT BOTTOM FLANGE, WEB AND TOP FLANGE**	2	41		Feet
515	**Effectiveness (Steel Protective Coatings)**	**PROTECTIVE SYSTEM DETERIORATING, ALLOWING SCATTERED AREAS OF FRECKLED RUST THROUGHOUT THE BEAM**	2	385	385	Square Feet

General Comments

Span 1 Beam 8

Plate Girder

Element Number	Element Name	Total Qty	CS1 Qty	CS2 Qty	CS3 Qty	CS4 Qty	
107	Steel Open Girder/Beam	41	1	40	0	0	Feet
515	Steel Protective Coating	385	0	384	1	0	Square Feet

Element Number	Defect Type	Defect Description	CS	CS Qty	Maint Qty	
107	**Corrosion**	**CORROSION ON BOTTOM FLANGE AND WEB AT BEAM ENDS WITH NO MEASUREABLE SECTION LOSS**	2			Feet
107	**Corrosion**	**SCATTERED AREAS OF FRECKLED RUST THROUGHOUT BOTTOM FLANGE, WEB AND TOP FLANGE**	2	40		Feet
515	**Damage**	**EVIDENCE OF FIRE ON NORTH FACE OF WEB, BOTTOM FLANGE AND TOP FLANGE AT END BENT 1, NO DAMAGE TO PAINT OR STEEL**	3	1		Square Feet
515	**Effectiveness (Steel Protective Coatings)**	**PROTECTIVE SYSTEM DETERIORATING, ALLOWING SCATTERED AREAS OF FRECKLED RUST THROUGHOUT THE BEAM**	2	384	384	Square Feet

General Comments

Span 1 Beam 9

Plate Girder

Element Number	Element Name	Total Qty	CS1 Qty	CS2 Qty	CS3 Qty	CS4 Qty	
107	Steel Open Girder/Beam	41	0	41	0	0	Feet
515	Steel Protective Coating	385	0	385	0	0	Square Feet

Element Number	Defect Type	Defect Description	CS	CS Qty	Maint Qty	
107	**Corrosion**	**CORROSION ON BOTTOM FLANGE AND WEB AT BEAM ENDS WITH NO MEASUREABLE SECTION LOSS**	2			Feet
107	**Corrosion**	**SCATTERED AREAS OF FRECKLED RUST THROUGHOUT BOTTOM FLANGE, WEB AND TOP FLANGE**	2	41		Feet

515	**Effectiveness (Steel Protective Coatings)**	**PROTECTIVE SYSTEM DETERIORATING, ALLOWING SCATTERED AREAS OF FRECKLED RUST THROUGHOUT THE BEAM**	2	385	385	Square Feet

General Comments

Span 1 Beam 10

Plate Girder

Element Number	Element Name	Total Qty	CS1 Qty	CS2 Qty	CS3 Qty	CS4 Qty	
107	Steel Open Girder/Beam	41	0	28	9	4	Feet
515	Steel Protective Coating	385	0	371	0	14	Square Feet

Element Number	Defect Type	Defect Description	CS	CS Qty	Maint Qty	
107	**Corrosion**	**CORROSION ON BOTTOM FLANGE AND WEB AT BENT 1 WITH SECTION LOSS FOR 4 FT. SECTION LOSS IN BEARING STIFFENER UP TO 100% WITH A HOLE, 2" WIDE X 1/2" HIGH UNDER BENT DIAPHRAGM. BOTTOM FLANGE HAS 11/16" SECTION REMAINING OVER 4 FT AT BENT 1 ACROSS FULL WIDTH OF FLANGE, PAR**	4	4	4	Feet
107	**Corrosion**	**CORROSION ON BOTTOM FLANGE AND LOWER 8" OF WEB AT END BENT 1 WITH SECTION LOSS. WEB HAS 7/16" SECTION REMAINING FOR 2 FT OF LENGTH AT END BENT 1. BOTTOM FLANGE HAS 5/8" SECTION REMAINING ACROSS FULL WIDTH OF FLANGE FOR 4 FT AT END BENT 1**	3	4	4	Feet
107	**Corrosion**	**CORROSION ON LEFT SIDE OF BOTTOM FLANGE AT END BENT 1 WITH SECTION LOSS, 6" LONG X FULL WIDTH OF FLANGE WITH 7/16" THICKNESS REMAINING, PAR**	3	1	1	Feet
107	**Corrosion**	**CORROSION ON OUTSIDE FACE OF WEB AT END BENT 1 FOR 30" LONG X 12" HIGH THEN 24" LONG X 6" HIGH WITH SECTION LOSS UP TO 5/16" SECTION REMAINING IN WEB**	3	4	5	Feet
107	**Corrosion**	**CORROSION WITH SECTION LOSS IN WEB AT BENT 1 BEHIND BEARING STIFFENER, 8" X 8" WITH UP TO 100% SECTION LOSS, PAR**	3		11	Feet
107	**Corrosion**	**CORROSION WITH SECTION LOSS IN WEB FOR 6 FT X UP TO 4" HIGH AT BENT 1 WITH 7/16" SECTION REMAINING IN WEB.**	3		6	Feet
107	**Damage**	**SPALL WITH EXPOSED REBAR IN END DIAPHRAGM AT BENT 1 OUTSIDE BEAM 10, 18" X 1 FT X 8" WITH EXPOSED REBAR, NO MEASUREABLE SECTION LOSS**	3			Feet
107	**Corrosion**	**SURFACE CORROSION THROUGHOUT TOP OF EXTERIOR BOTTOM FLANGE FOR FULL LENGTH OF BEAM, SCATTERED FRECKLED RUST THROUGHOUT WEB, TOP FLANGE AND INSIDE BOTTOM FLANGE, NO MEASUREABLE SECTION LOSS**	2	28		Feet
515	**Effectiveness (Steel Protective Coatings)**	**PROTECTIVE SYSTEM FAILED AT BEARINGS, RESULTING IN CORROSION WITH SECTION LOSS**	4	14	14	Square Feet
515	**Effectiveness (Steel Protective Coatings)**	**PROTECTIVE SYSTEM DETERIORATING ALLOWING FRECKLED RUST.**	2	371	371	Square Feet

General Comments

Span 1 Wearing Surface

Asphalt Wearing Surface

Element Number	Element Name	Total Qty	CS1 Qty	CS2 Qty	CS3 Qty	CS4 Qty	
510	Wearing Surface	2,706	2,616	0	90	0	Square Feet

Element Number	Defect Type	Defect Description	CS	CS Qty	Maint Qty	
510	**Crack (Wearing Surface)**	**FULL WIDTH CRACKS UP TO 1/2" WIDE OVER END BENT 1, 2 FT WIDE AREA**	3	90	90	Square Feet

General Comments

Span 1 Left Bridge Rail

Steel Rail

Element Number	Element Name	Total Qty	CS1 Qty	CS2 Qty	CS3 Qty	CS4 Qty	
330	Metal Bridge Railing	41	38	0	3	0	Feet
515	Steel Protective Coating	41	41	0	0	0	Square Feet

Element Number	Defect Type	Defect Description	CS	CS Qty	Maint Qty	
330	**Damage**	**POOR CONCRETE QUALITY IN ORIGINAL BARRIER CURB (POSSIBLE ALKALI SILICA REACTION) AT END BENT 1 FOR 2.5 FT X FULL WIDTH X FULL DEPTH OF CURB WITH EXPOSED REBAR, NO SECTION LOSS. CONCRETE IS POWDERY AND DISINTEGRATING**	3	3	3	Feet

General Comments

Span 1 Median Rail

Concrete Railing

Element Number	Element Name	Total Qty	CS1 Qty	CS2 Qty	CS3 Qty	CS4 Qty	
331	Reinforced Concrete Bridge Railing	41	0	41	0	0	Feet

Element Number	Defect Type	Defect Description	CS	CS Qty	Maint Qty	
331	**Cracking (RC and Other)**	**HAIRLINE VERTICAL CRACKS UP TO FULL HEIGHT SPACED AT 1 FT FOR FULL LENGHT OF SPAN**	2	41		Feet

General Comments

Span 1 Near Bearing

Fixed Bearing

Element Number	Element Name	Total Qty	CS1 Qty	CS2 Qty	CS3 Qty	CS4 Qty	
313	Fixed Bearing	1	0	0	1	0	Each
515	Steel Protective Coating	2	0	0	0	2	Square Feet

Element Number	Defect Type	Defect Description	CS	CS Qty	Maint Qty	
313	**Corrosion**	**PACK RUST PRESENT ON BEARING PLATES**	3	1	1	Each
515	**Effectiveness (Steel Protective Coatings)**	**PROTECTIVE SYSTEM FAILED ALLOWING PACK RUST ON BEARING PLATES.**	4	2	2	Square Feet

General Comments

Span 1 Far Bearing

Movable Bearing

Element Number	Element Name	Total Qty	CS1 Qty	CS2 Qty	CS3 Qty	CS4 Qty	
311	Movable Bearing	1	0	0	1	0	Each
515	Steel Protective Coating	2	0	0	0	2	Square Feet

Element Number	Defect Type	Defect Description	CS	CS Qty	Maint Qty	
311	**Corrosion**	**PACK RUST PRESENT ON BEARING PLATES**	3	1	1	Each
515	**Effectiveness (Steel Protective Coatings)**	**PROTECTIVE SYSTEM FAILED ALLOWING PACK RUST ON BEARING PLATES.**	4	2	2	Square Feet

General Comments

Span 1 Far Bearing

Movable Bearing

Element Number	Element Name	Total Qty	CS1 Qty	CS2 Qty	CS3 Qty	CS4 Qty	
311	Movable Bearing	1	0	1	0	0	Each
515	Steel Protective Coating	2	0	0	2	0	Square Feet

Element Number	Defect Type	Defect Description	CS	CS Qty	Maint Qty	
311	**Corrosion**	**SURFACE CORROSION PRESENT ON BEARING PLATES**	2	1		Each
515	**Effectiveness (Steel Protective Coatings)**	**PROTECTIVE SYSTEM FAILED ALLOWING SURFACE CORROSION ON BEARING PLATES.**	3	2	2	Square Feet

General Comments

Span 1 Far Bearing

Movable Bearing

Element Number	Element Name	Total Qty	CS1 Qty	CS2 Qty	CS3 Qty	CS4 Qty	
311	Movable Bearing	1	0	1	0	0	Each
515	Steel Protective Coating	2	0	0	2	0	Square Feet

Element Number	Defect Type	Defect Description	CS	CS Qty	Maint Qty	
311	**Corrosion**	**SURFACE CORROSION PRESENT ON BEARING PLATES**	2	1		Each
515	**Effectiveness (Steel Protective Coatings)**	**PROTECTIVE SYSTEM FAILED ALLOWING SURFACE CORROSION ON BEARING PLATES.**	3	2	2	Square Feet

General Comments

Span 1 Far Bearing

Movable Bearing

Element Number	Element Name	Total Qty	CS1 Qty	CS2 Qty	CS3 Qty	CS4 Qty	
311	Movable Bearing	1	0	0	1	0	Each
515	Steel Protective Coating	2	0	0	0	2	Square Feet

Element Number	Defect Type	Defect Description	CS	CS Qty	Maint Qty	
311	**Corrosion**	**PACK RUST PRESENT ON BEARING PLATES**	3	1	1	Each
515	**Effectiveness (Steel Protective Coatings)**	**PROTECTIVE SYSTEM FAILED ALLOWING PACK RUST ON BEARING PLATES.**	4	2	2	Square Feet

General Comments

Span 1 Near Bearing

Fixed Bearing

Element Number	Element Name	Total Qty	CS1 Qty	CS2 Qty	CS3 Qty	CS4 Qty	
313	Fixed Bearing	1	0	1	0	0	Each
515	Steel Protective Coating	2	1	0	1	0	Square Feet

Element Number	Defect Type	Defect Description	CS	CS Qty	Maint Qty

313	**Corrosion**	**SURFACE CORROSION PRESENT ON BEARING PLATES**	2	1		Each
515	**Effectiveness (Steel Protective Coatings)**	**PROTECTIVE SYSTEM FAILED ALLOWING SURFACE CORROSION ON BEARING PLATES.**	3	1	1	Square Feet

General Comments

Span 1 Far Bearing

Movable Bearing

Element Number	Element Name	Total Qty	CS1 Qty	CS2 Qty	CS3 Qty	CS4 Qty	
311	Movable Bearing	1	0	1	0	0	Each
515	Steel Protective Coating	2	0	0	2	0	Square Feet

Element Number	Defect Type	Defect Description	CS	CS Qty	Maint Qty	
311	**Corrosion**	**SURFACE CORROSION PRESENT ON BEARING PLATES**	2	1		Each
515	**Effectiveness (Steel Protective Coatings)**	**PROTECTIVE SYSTEM FAILED ALLOWING SURFACE CORROSION ON BEARING PLATES.**	3	2	2	Square Feet

General Comments

Span 1 Near Bearing

Fixed Bearing

Element Number	Element Name	Total Qty	CS1 Qty	CS2 Qty	CS3 Qty	CS4 Qty	
313	Fixed Bearing	1	0	1	0	0	Each
515	Steel Protective Coating	2	1	0	1	0	Square Feet

Element Number	Defect Type	Defect Description	CS	CS Qty	Maint Qty	
313	**Corrosion**	**SURFACE CORROSION PRESENT ON BEARING PLATES**	2	1		Each
515	**Effectiveness (Steel Protective Coatings)**	**PROTECTIVE SYSTEM FAILED ALLOWING SURFACE CORROSION ON BEARING PLATES.**	3	1	1	Square Feet

General Comments

Span 1 Far Bearing

Movable Bearing

Element Number	Element Name	Total Qty	CS1 Qty	CS2 Qty	CS3 Qty	CS4 Qty	
311	Movable Bearing	1	0	1	0	0	Each
515	Steel Protective Coating	2	0	0	2	0	Square Feet

Element Number	Defect Type	Defect Description	CS	CS Qty	Maint Qty	
311	**Corrosion**	**SURFACE CORROSION PRESENT ON BEARING PLATES**	2	1		Each
515	**Effectiveness (Steel Protective Coatings)**	**PROTECTIVE SYSTEM FAILED ALLOWING SURFACE CORROSION ON BEARING PLATES.**	3	2	2	Square Feet

General Comments

Structure Number: **430243** Inspection Date: **02/12/2021**

Span 1 Near Bearing

Fixed Bearing

Element Number	Element Name	Total Qty	CS1 Qty	CS2 Qty	CS3 Qty	CS4 Qty	
313	Fixed Bearing	1	0	1	0	0	Each
515	Steel Protective Coating	2	1	0	1	0	Square Feet

Element Number	Defect Type	Defect Description	CS	CS Qty	Maint Qty	
313	**Corrosion**	**SURFACE CORROSION PRESENT ON BEARING PLATES**	2	1		Each
515	**Effectiveness (Steel Protective Coatings)**	**PROTECTIVE SYSTEM FAILED ALLOWING SURFACE CORROSION ON BEARING PLATES.**	3	1	1	Square Feet

General Comments

Span 1 Far Bearing

Movable Bearing

Element Number	Element Name	Total Qty	CS1 Qty	CS2 Qty	CS3 Qty	CS4 Qty	
311	Movable Bearing	1	0	1	0	0	Each
515	Steel Protective Coating	2	0	0	2	0	Square Feet

Element Number	Defect Type	Defect Description	CS	CS Qty	Maint Qty	
311	**Corrosion**	**SURFACE CORROSION PRESENT ON BEARING PLATES**	2	1		Each
515	**Effectiveness (Steel Protective Coatings)**	**PROTECTIVE SYSTEM FAILED ALLOWING SURFACE CORROSION ON BEARING PLATES.**	3	2	2	Square Feet

General Comments

Span 1 Near Bearing

Fixed Bearing

Element Number	Element Name	Total Qty	CS1 Qty	CS2 Qty	CS3 Qty	CS4 Qty	
313	Fixed Bearing	1	0	1	0	0	Each
515	Steel Protective Coating	2	0	0	2	0	Square Feet

Element Number	Defect Type	Defect Description	CS	CS Qty	Maint Qty	
313	**Corrosion**	**SURFACE CORROSION ON BEARING PLATES**	2	1		Each
515	**Effectiveness (Steel Protective Coatings)**	**PROTECTIVE SYSTEM DETERIORATING, ALLOWING SURFACE CORROSION.**	3	2	2	Square Feet

General Comments

Span 1 Far Bearing

Movable Bearing

Element Number	Element Name	Total Qty	CS1 Qty	CS2 Qty	CS3 Qty	CS4 Qty	
311	Movable Bearing	1	0	1	0	0	Each
515	Steel Protective Coating	2	0	0	2	0	Square Feet

Element Number	Defect Type	Defect Description	CS	CS Qty	Maint Qty	
311	**Corrosion**	**SURFACE CORROSION PRESENT ON BEARING PLATES**	2	1		Each
515	**Effectiveness (Steel Protective Coatings)**	**PROTECTIVE SYSTEM FAILED ALLOWING SURFACE CORROSION ON BEARING PLATES.**	3	2	2	Square Feet

General Comments

Span 1 Far Bearing

Movable Bearing

Element Number	Element Name	Total Qty	CS1 Qty	CS2 Qty	CS3 Qty	CS4 Qty	
311	Movable Bearing	1	0	1	0	0	Each
515	Steel Protective Coating	2	0	0	2	0	Square Feet

Element Number	Defect Type	Defect Description	CS	CS Qty	Maint Qty	
311	**Corrosion**	**SURFACE CORROSION PRESENT ON BEARING PLATES**	2	1		Each
515	**Effectiveness (Steel Protective Coatings)**	**PROTECTIVE SYSTEM FAILED ALLOWING SURFACE CORROSION ON BEARING PLATES.**	3	2	2	Square Feet

General Comments

Span 1 Near Bearing

Fixed Bearing

Element Number	Element Name	Total Qty	CS1 Qty	CS2 Qty	CS3 Qty	CS4 Qty	
313	Fixed Bearing	1	0	0	1	0	Each
515	Steel Protective Coating	2	0	0	0	2	Square Feet

Element Number	Defect Type	Defect Description	CS	CS Qty	Maint Qty	
313	**Corrosion**	**PACK RUST PRESENT ON BEARING PLATES**	3	1	1	Each
515	**Effectiveness (Steel Protective Coatings)**	**PROTECTIVE SYSTEM FAILED ALLOWING PACK RUST ON BEARING PLATES**	4	2	2	Square Feet

General Comments

Span 1 Far Bearing

Movable Bearing

Element Number	Element Name	Total Qty	CS1 Qty	CS2 Qty	CS3 Qty	CS4 Qty	
311	Movable Bearing	1	0	0	1	0	Each
515	Steel Protective Coating	2	0	0	0	2	Square Feet

Element Number	Defect Type	Defect Description	CS	CS Qty	Maint Qty	
311	**Corrosion**	**PACK RUST PRESENT ON BEARING PLATES**	3	1	1	Each
515	**Effectiveness (Steel Protective Coatings)**	**PROTECTIVE SYSTEM FAILED ALLOWING PACK RUST ON BEARING PLATES.**	4	2	2	Square Feet

General Comments

Span 2 Deck

Reinforced Concrete Deck

Element Number	Element Name	Total Qty	CS1 Qty	CS2 Qty	CS3 Qty	CS4 Qty	
12	Reinforced Concrete Deck	3,571	2,949	600	22	0	Square Feet

Element Number	Defect Type	Defect Description	CS	CS Qty	Maint Qty

12	**Delamination/Spall**	**SPALL, 2.5 FT X 1.5 FT X 3" DEEP ON UNDERSIDE OF NORTH OVERHANG AT MIDSPAN WITH EXPOSED REBAR, NO SECTION LOSS**	3	6	6	Square Feet
12	**Delamination/Spall**	**SPALL, FULL HEIGHT X 6" X 1.5" WIDE ON SOUTH END OF DECK/DIAPHRAGM WITH EXPOSED REBAR, NO SECTION LOSS**	3	1	1	Square Feet
12	**Patched Areas**	**UNSOUND PATCH, DELAMINATED, 5 FT X 3 FT IN UNDERSIDE OF SOUTH OVERHANG AT BENT 2 WITH A SPALL 2.5 FT X 2 FT X 2" DEEP WITH EXPOSED REBAR, NO SECTION LOSS**	3	15	15	Square Feet
12	**Cracking (RC and Other)**	**HAIRLINE TRANSVERSE CRACKS WITH EFFLORESCENCE IN THE UNDERSIDE OF THE DECK, FULL WIDTH OF BAY, ALL BAYS SIMILAR**	2	600		Square Feet

General Comments

Span 2 Beam 1

Plate Girder

Element Number	Element Name	Total Qty	CS1 Qty	CS2 Qty	CS3 Qty	CS4 Qty	
107	Steel Open Girder/Beam	50	0	46	4	0	Feet
515	Steel Protective Coating	473	0	459	0	14	Square Feet

Element Number	Defect Type	Defect Description	CS	CS Qty	Maint Qty	
107	**Corrosion**	**CORROSION ON BOTTOM FLANGE AND WEB AT BENT 1 FOR 4 FT WITH SECTION LOSS ON BOTTOM FLANGE. BOTTOM FLANGE HAS 7/16" REMAINING FOR 1 FT AT BENT 1 FOR FULL WIDTH OF FLANGE. NO MEASUREABLE SECTION LOSS IN WEB**	3	4	4	Feet
107	**Corrosion**	**CORROSION IN WEB AT BENT 1 FOR 3 FT X UP TO 12" IN HEIGHT WITH NO MEASUREABLE SECTION LOSS**	2			Feet
107	**Corrosion**	**PROTECTIVE SYSTEM DETERIORATING, ALLOWING FRECKLED RUST TO FORM ON THE WEB AND FLANGES THROUGHOUT. THE EXTERIOR HALF OF THE BOTTOM FLANGE, TOP FACE, HAS FULL LENGTH SURFACE CORROSION**	2	36		Feet
107	**Corrosion**	**SURFACE CORROSION ON BOTTOM FLANGE AND UP TO FULL HEIGHT OF WEB FOR 10 FT AT BENT 2 WITH FLAKING RUST, NO MEASUREABLE SECTION LOSS**	2	10		Feet
515	**Effectiveness (Steel Protective Coatings)**	**PROTECTIVE SYSTEM FAILED AT BEARINGS, RESULTING IN CORROSION WITH SECTION LOSS**	4	14	14	Square Feet
515	**Effectiveness (Steel Protective Coatings)**	**PROTECTIVE SYSTEM DETERIORATING ALLOWING FRECKLED RUST.**	2	459	459	Square Feet

General Comments

Span 2 Beam 2

Plate Girder

Element Number	Element Name	Total Qty	CS1 Qty	CS2 Qty	CS3 Qty	CS4 Qty	
107	Steel Open Girder/Beam	50	0	50	0	0	Feet
515	Steel Protective Coating	473	0	473	0	0	Square Feet

Element Number	Defect Type	Defect Description	CS	CS Qty	Maint Qty	
107	**Corrosion**	**CORROSION ON BOTTOM FLANGE AND WEB AT BEAM ENDS WITH NO MEASUREABLE SECTION LOSS, FRECKLED RUST SCATTERED THROUGHOUT REMAINDER OF BEAM**	2	50		Feet
515	**Effectiveness (Steel Protective Coatings)**	**PROTECTIVE SYSTEM DETERIORATING, ALLOWING FRECKLED RUST ALONG THE WEB AND FLANGES**	2	473	473	Square Feet

General Comments

Span 2 Beam 3

Plate Girder

Element Number	Element Name	Total Qty	CS1 Qty	CS2 Qty	CS3 Qty	CS4 Qty	
107	Steel Open Girder/Beam	50	0	50	0	0	Feet
515	Steel Protective Coating	473	0	473	0	0	Square Feet

Element Number	Defect Type	Defect Description	CS	CS Qty	Maint Qty	
107	**Corrosion**	**CORROSION ON BOTTOM FLANGE AND WEB AT BEAM ENDS WITH NO MEASUREABLE SECTION LOSS, FRECKLED RUST SCATTERED THROUGHOUT REMAINDER OF BEAM**	2	50		Feet
515	**Effectiveness (Steel Protective Coatings)**	**PROTECTIVE SYSTEM DETERIORATING, ALLOWING FRECKLED RUST ALONG THE WEB AND FLANGES**	2	473	473	Square Feet

General Comments

Span 2 Beam 4

Plate Girder

Element Number	Element Name	Total Qty	CS1 Qty	CS2 Qty	CS3 Qty	CS4 Qty	
107	Steel Open Girder/Beam	50	0	50	0	0	Feet
515	Steel Protective Coating	473	0	473	0	0	Square Feet

Element Number	Defect Type	Defect Description	CS	CS Qty	Maint Qty	
107	**Corrosion**	**CORROSION ON BOTTOM FLANGE AND WEB AT BEAM ENDS WITH NO MEASUREABLE SECTION LOSS, FRECKLED RUST SCATTERED THROUGHOUT REMAINDER OF BEAM**	2	49		Feet
107	**Corrosion**	**CORROSION ON BOTTOM FLANGE AND WEB AT BENT 2 AT BEARING FROM END OF BEAM TO BEARING STIFFENER, 6" LONG X 6" HIGH WITH NO MEASUREABLE SECTION LOSS**	2	1		Feet
515	**Effectiveness (Steel Protective Coatings)**	**PROTECTIVE SYSTEM DETERIORATING, ALLOWING FRECKLED RUST ALONG THE WEB AND FLANGES**	2	473	473	Square Feet

General Comments

Span 2 Beam 5

Plate Girder

Element Number	Element Name	Total Qty	CS1 Qty	CS2 Qty	CS3 Qty	CS4 Qty	
107	Steel Open Girder/Beam	50	0	50	0	0	Feet
515	Steel Protective Coating	473	0	473	0	0	Square Feet

Element Number	Defect Type	Defect Description	CS	CS Qty	Maint Qty	
107	**Corrosion**	**CORROSION ON BOTTOM FLANGE AND WEB AT BEAM ENDS WITH NO MEASUREABLE SECTION LOSS, FRECKLED RUST SCATTERED THROUGHOUT REMAINDER OF BEAM**	2	50		Feet
107	**Corrosion**	**SURFACE CORROSION ON BOTTOM FLANGE, BEARING STIFFENER AND FULL HEIGHT OF WEB FOR 3 FT AT BENT 2, NO MEASUREABLE SECTION LOSS**	2			Feet
515	**Effectiveness (Steel Protective Coatings)**	**PROTECTIVE SYSTEM DETERIORATING, ALLOWING FRECKLED RUST ALONG THE WEB AND FLANGES**	2	473	473	Square Feet

General Comments

Span 2 Beam 6

Plate Girder

Element Number	Element Name	Total Qty	CS1 Qty	CS2 Qty	CS3 Qty	CS4 Qty	
107	Steel Open Girder/Beam	50	0	50	0	0	Feet
515	Steel Protective Coating	473	0	473	0	0	Square Feet

Element Number	Defect Type	Defect Description	CS	CS Qty	Maint Qty	
107	**Corrosion**	**CORROSION ON BOTTOM FLANGE AND WEB AT BEAMS ENDS WITH NO MEASUREABLE SECTION LOSS, FRECKLED RUST SCATTERED THROUGHOUT REMAINDER OF BEAM**	2	50		Feet
515	**Effectiveness (Steel Protective Coatings)**	**PROTECTIVE SYSTEM DETERIORATING, ALLOWING FRECKLED RUST ALONG THE WEB AND FLANGES, AND CORROSION WITH 1/16" PITTING / SCALE LOSS FOR 1' AT THE ENDS OF THE BEAM.**	2	473	473	Square Feet

General Comments

Span 2 Beam 7

Plate Girder

Element Number	Element Name	Total Qty	CS1 Qty	CS2 Qty	CS3 Qty	CS4 Qty	
107	Steel Open Girder/Beam	50	0	50	0	0	Feet
515	Steel Protective Coating	473	0	473	0	0	Square Feet

Element Number	Defect Type	Defect Description	CS	CS Qty	Maint Qty	
107	**Corrosion**	**CORROSION ON BOTTOM FLANGE AND WEB AT BEAM ENDS WITH NO MEASUREABLE SECTION LOSS, FRECKLED RUST SCATTERED THROUGHOUT REMAINDER OF BEAM**	2	50		Feet
515	**Effectiveness (Steel Protective Coatings)**	**PROTECTIVE SYSTEM DETERIORATING, ALLOWING FRECKLED RUST ALONG THE WEB AND FLANGES**	2	473	473	Square Feet

General Comments

Span 2 Beam 8

Plate Girder

Element Number	Element Name	Total Qty	CS1 Qty	CS2 Qty	CS3 Qty	CS4 Qty	
107	Steel Open Girder/Beam	50	0	50	0	0	Feet
515	Steel Protective Coating	473	0	473	0	0	Square Feet

Element Number	Defect Type	Defect Description	CS	CS Qty	Maint Qty	
107	**Corrosion**	**CORROSION ON BOTTOM FLANGE AND WEB AT BEAM ENDS WITH NO MEASUREABLE SECTION LOSS, FRECKLED RUST SCATTERED THROUGHOUT REMAINDER OF BEAM**	2	50		Feet
515	**Effectiveness (Steel Protective Coatings)**	**PROTECTIVE SYSTEM DETERIORATING, ALLOWING FRECKLED RUST ALONG THE WEB AND FLANGES**	2	473	473	Square Feet

General Comments

Span 2 Beam 9

Plate Girder

Element Number	Element Name	Total Qty	CS1 Qty	CS2 Qty	CS3 Qty	CS4 Qty	
107	Steel Open Girder/Beam	50	0	50	0	0	Feet
515	Steel Protective Coating	473	0	473	0	0	Square Feet

Element Number	Defect Type	Defect Description	CS	CS Qty	Maint Qty	
107	**Corrosion**	**CORROSION ON BOTTOM FLANGE AND WEB AT BEAM ENDS WITH NO MEASUREABLE SECTION LOSS, FRECKLED RUST SCATTERED THROUGHOUT REMAINDER OF BEAM**	2	50		Feet
107	**Corrosion**	**SURFACE CORROSION ON BOTTOM FLANGE, BEARING STIFFENER AND FULL HEIGHT OF WEB FOR 4 FT AT BENT 2, NO MEASUREABLE SECTION LOSS**	2			Feet
515	**Effectiveness (Steel Protective Coatings)**	**PROTECTIVE SYSTEM DETERIORATING, ALLOWING FRECKLED RUST ALONG THE WEB AND FLANGES**	2	473	473	Square Feet

General Comments

Span 2 Beam 10

Plate Girder

Element Number	Element Name	Total Qty	CS1 Qty	CS2 Qty	CS3 Qty	CS4 Qty	
107	Steel Open Girder/Beam	50	0	46	4	0	Feet
515	Steel Protective Coating	473	0	459	0	14	Square Feet

Element Number	Defect Type	Defect Description	CS	CS Qty	Maint Qty	
107	**Corrosion**	**CORROSION ON BOTTOM FLANGE AND LOWER 4" OF WEB AT BENT 1 WITH NO MEASUREABLE SECTION LOSS FOR 4 FT**	3	4	4	Feet
107	**Damage**	**SPALL WITH EXPOSED REBAR IN END DIAPHRAGM AT BENT 1 OUTSIDE BEAM 10, 18" X 1 FT X 8" WITH EXPOSED REBAR, NO MEASUREABLE SECTION LOSS**	3			Feet
107	**Corrosion**	**PROTECTIVE SYSTEM DETERIORATING, ALLOWING FRECKLED RUST TO FORM ON THE WEB AND FLANGES THROUGHOUT. THE EXTERIOR HALF OF THE BOTTOM FLANGE, TOP FACE, HAS FULL LENGTH SURFACE CORROSION**	2	43		Feet
107	**Corrosion**	**SURFACE CORROSION ON BOTTOM FLANGE AND FULL HEIGHT OF WEB FOR 3 FT AT BENT 2, NO MEASUREABLE SECTION LOSS**	2	3		Feet
515	**Effectiveness (Steel Protective Coatings)**	**PROTECTIVE SYSTEM FAILED AT BEARINGS, RESULTING IN CORROSION WITH SECTION LOSS**	4	14	14	Square Feet
515	**Effectiveness (Steel Protective Coatings)**	**PROTECTIVE SYSTEM DETERIORATING ALLOWING FRECKLED RUST.**	2	459	459	Square Feet

General Comments

Span 2 Wearing Surface

Asphalt Wearing Surface

Element Number	Element Name	Total Qty	CS1 Qty	CS2 Qty	CS3 Qty	CS4 Qty	
510	Wearing Surface	3,300	3,239	1	60	0	Square Feet

Element Number	Defect Type	Defect Description	CS	CS Qty	Maint Qty	
510	**Crack (Wearing Surface)**	**FULL WIDTH CRACK UP TO 1/2" WIDE OVER BENT 1**	3	60	60	Square Feet
510	**Patched Area/Pothole (Wearing Surface)**	**6" LONG X 4" WIDE POTHOLE UP TO 1" DEEP IN WEARING SURFACE AT MIDSPAN IN EASTBOUND LANES**	2	1		Square Feet

General Comments

Span 2 Median Rail

Concrete Railing

Element Number	Element Name	Total Qty	CS1 Qty	CS2 Qty	CS3 Qty	CS4 Qty	
331	Reinforced Concrete Bridge Railing	50	0	50	0	0	Feet

Element Number	Defect Type	Defect Description	CS	CS Qty	Maint Qty	
331	**Cracking (RC and Other)**	**HAIRLINE VERTICAL CRACKS UP TO FULL HEIGHT SPACED AT 1 FT FOR FULL LENGHT OF SPAN**	2	50		Feet

General Comments

Span 2 Near Bearing

Fixed Bearing

Element Number	Element Name	Total Qty	CS1 Qty	CS2 Qty	CS3 Qty	CS4 Qty	
313	Fixed Bearing	1	0	0	1	0	Each
515	Steel Protective Coating	2	0	0	0	2	Square Feet

Element Number	Defect Type	Defect Description	CS	CS Qty	Maint Qty	
313	**Corrosion**	**PACK RUST PRESENT ON BEARING PLATES**	3	1	1	Each
515	**Effectiveness (Steel Protective Coatings)**	**PROTECTIVE SYSTEM FAILED ALLOWING PACK RUST ON BEARING PLATES.**	4	2	2	Square Feet

General Comments

Span 2 Far Bearing

Movable Bearing

Element Number	Element Name	Total Qty	CS1 Qty	CS2 Qty	CS3 Qty	CS4 Qty	
311	Movable Bearing	1	0	0	1	0	Each
515	Steel Protective Coating	2	0	0	0	2	Square Feet

Element Number	Defect Type	Defect Description	CS	CS Qty	Maint Qty	
311	**Corrosion**	**PACK RUST PRESENT ON BEARING PLATES**	3	1	1	Each
515	**Effectiveness (Steel Protective Coatings)**	**PROTECTIVE SYSTEM FAILED ALLOWING PACK RUST ON BEARING PLATES.**	4	2	2	Square Feet

General Comments

Span 2 Near Bearing

Fixed Bearing

Element Number	Element Name	Total Qty	CS1 Qty	CS2 Qty	CS3 Qty	CS4 Qty	
313	Fixed Bearing	1	0	0	1	0	Each
515	Steel Protective Coating	2	0	0	0	2	Square Feet

Element Number	Defect Type	Defect Description	CS	CS Qty	Maint Qty	
313	**Corrosion**	**PACK RUST PRESENT ON BEARING PLATES**	3	1	1	Each
515	**Effectiveness (Steel Protective Coatings)**	**PROTECTIVE SYSTEM FAILED ALLOWING PACK RUST ON BEARING PLATES.**	4	2	2	Square Feet

General Comments

Span 2 Far Bearing

Movable Bearing

Element Number	Element Name	Total Qty	CS1 Qty	CS2 Qty	CS3 Qty	CS4 Qty	
311	Movable Bearing	1	0	0	1	0	Each
515	Steel Protective Coating	2	0	0	0	2	Square Feet

Element Number	Defect Type	Defect Description	CS	CS Qty	Maint Qty	
311	**Corrosion**	**PACK RUST PRESENT ON BEARING PLATES**	3	1	1	Each
515	**Effectiveness (Steel Protective Coatings)**	**PROTECTIVE SYSTEM FAILED ALLOWING PACK RUST ON BEARING PLATES.**	4	2	2	Square Feet

General Comments

Span 2 Near Bearing

Fixed Bearing

Element Number	Element Name	Total Qty	CS1 Qty	CS2 Qty	CS3 Qty	CS4 Qty	
313	Fixed Bearing	1	0	0	1	0	Each
515	Steel Protective Coating	2	0	0	0	2	Square Feet

Element Number	Defect Type	Defect Description	CS	CS Qty	Maint Qty	
313	**Corrosion**	**PACK RUST PRESENT ON BEARING PLATES**	3	1	1	Each
515	**Effectiveness (Steel Protective Coatings)**	**PROTECTIVE SYSTEM FAILED ALLOWING PACK RUST ON BEARING PLATES.**	4	2	2	Square Feet

General Comments

Span 2 Far Bearing

Movable Bearing

Element Number	Element Name	Total Qty	CS1 Qty	CS2 Qty	CS3 Qty	CS4 Qty	
311	Movable Bearing	1	0	0	1	0	Each
515	Steel Protective Coating	2	0	0	0	2	Square Feet

Element Number	Defect Type	Defect Description	CS	CS Qty	Maint Qty	
311	**Corrosion**	**PACK RUST PRESENT ON BEARING PLATES**	3	1	1	Each
515	**Effectiveness (Steel Protective Coatings)**	**PROTECTIVE SYSTEM FAILED ALLOWING PACK RUST ON BEARING PLATES.**	4	2	2	Square Feet

General Comments

Span 2 Near Bearing

Fixed Bearing

Element Number	Element Name	Total Qty	CS1 Qty	CS2 Qty	CS3 Qty	CS4 Qty	
313	Fixed Bearing	1	0	0	1	0	Each
515	Steel Protective Coating	2	0	0	0	2	Square Feet

Element Number	Defect Type	Defect Description	CS	CS Qty	Maint Qty

313	**Corrosion**	**PACK RUST PRESENT ON BEARING PLATES**	3	1	1	Each
515	**Effectiveness (Steel Protective Coatings)**	**PROTECTIVE SYSTEM FAILED ALLOWING PACK RUST ON BEARING PLATES.**	4	2	2	Square Feet

General Comments

Span 2 Far Bearing

Movable Bearing

Element Number	Element Name	Total Qty	CS1 Qty	CS2 Qty	CS3 Qty	CS4 Qty	
311	Movable Bearing	1	0	0	1	0	Each
515	Steel Protective Coating	2	0	0	0	2	Square Feet

Element Number	Defect Type	Defect Description	CS	CS Qty	Maint Qty	
311	**Corrosion**	**PACK RUST PRESENT ON BEARING PLATES**	3	1	1	Each
515	**Effectiveness (Steel Protective Coatings)**	**PROTECTIVE SYSTEM FAILED ALLOWING PACK RUST ON BEARING PLATES.**	4	2	2	Square Feet

General Comments

Span 2 Near Bearing

Fixed Bearing

Element Number	Element Name	Total Qty	CS1 Qty	CS2 Qty	CS3 Qty	CS4 Qty	
313	Fixed Bearing	1	0	0	1	0	Each
515	Steel Protective Coating	2	0	0	0	2	Square Feet

Element Number	Defect Type	Defect Description	CS	CS Qty	Maint Qty	
313	**Corrosion**	**PACK RUST PRESENT ON BEARING PLATES**	3	1	1	Each
515	**Effectiveness (Steel Protective Coatings)**	**PROTECTIVE SYSTEM FAILED ALLOWING PACK RUST ON BEARING PLATES.**	4	2	2	Square Feet

General Comments

Span 2 Far Bearing

Movable Bearing

Element Number	Element Name	Total Qty	CS1 Qty	CS2 Qty	CS3 Qty	CS4 Qty	
311	Movable Bearing	1	0	0	1	0	Each
515	Steel Protective Coating	2	0	0	0	2	Square Feet

Element Number	Defect Type	Defect Description	CS	CS Qty	Maint Qty	
311	**Corrosion**	**PACK RUST PRESENT ON BEARING PLATES**	3	1	1	Each
515	**Effectiveness (Steel Protective Coatings)**	**PROTECTIVE SYSTEM FAILED ALLOWING PACK RUST ON BEARING PLATES.**	4	2	2	Square Feet

General Comments

Span 2 Near Bearing

Fixed Bearing

Element Number	Element Name	Total Qty	CS1 Qty	CS2 Qty	CS3 Qty	CS4 Qty	
313	Fixed Bearing	1	0	0	1	0	Each
515	Steel Protective Coating	2	0	0	0	2	Square Feet

Element Number	Defect Type	Defect Description	CS	CS Qty	Maint Qty	
313	**Corrosion**	**PACK RUST PRESENT ON BEARING PLATES**	3	1	1	Each
515	**Effectiveness (Steel Protective Coatings)**	**PROTECTIVE SYSTEM FAILED ALLOWING PACK RUST ON BEARING PLATES.**	4	2	2	Square Feet

General Comments

Span 2 Far Bearing

Movable Bearing

Element Number	Element Name	Total Qty	CS1 Qty	CS2 Qty	CS3 Qty	CS4 Qty	
311	Movable Bearing	1	0	0	1	0	Each
515	Steel Protective Coating	2	0	0	0	2	Square Feet

Element Number	Defect Type	Defect Description	CS	CS Qty	Maint Qty	
311	**Corrosion**	**PACK RUST PRESENT ON BEARING PLATES**	3	1	1	Each
515	**Effectiveness (Steel Protective Coatings)**	**PROTECTIVE SYSTEM FAILED ALLOWING PACK RUST ON BEARING PLATES.**	4	2	2	Square Feet

General Comments

Span 2 Near Bearing

Fixed Bearing

Element Number	Element Name	Total Qty	CS1 Qty	CS2 Qty	CS3 Qty	CS4 Qty	
313	Fixed Bearing	1	0	0	1	0	Each
515	Steel Protective Coating	2	0	0	0	2	Square Feet

Element Number	Defect Type	Defect Description	CS	CS Qty	Maint Qty	
313	**Corrosion**	**PACK RUST PRESENT ON BEARING PLATES**	3	1	1	Each
515	**Effectiveness (Steel Protective Coatings)**	**PROTECTIVE SYSTEM FAILED ALLOWING PACK RUST ON BEARING PLATES.**	4	2	2	Square Feet

General Comments

Span 2 Far Bearing

Movable Bearing

Element Number	Element Name	Total Qty	CS1 Qty	CS2 Qty	CS3 Qty	CS4 Qty	
311	Movable Bearing	1	0	0	1	0	Each
515	Steel Protective Coating	2	0	0	0	2	Square Feet

Element Number	Defect Type	Defect Description	CS	CS Qty	Maint Qty	
311	**Corrosion**	**PACK RUST PRESENT ON BEARING PLATES**	3	1	1	Each
515	**Effectiveness (Steel Protective Coatings)**	**PROTECTIVE SYSTEM FAILED ALLOWING PACK RUST ON BEARING PLATES.**	4	2	2	Square Feet

General Comments

Span 2 Near Bearing

Fixed Bearing

Element Number	Element Name	Total Qty	CS1 Qty	CS2 Qty	CS3 Qty	CS4 Qty	
313	Fixed Bearing	1	0	0	1	0	Each
515	Steel Protective Coating	2	0	0	0	2	Square Feet

Element Number	Defect Type	Defect Description	CS	CS Qty	Maint Qty	
313	**Corrosion**	**PACK RUST PRESENT ON BEARING PLATES**	3	1	1	Each
515	**Effectiveness (Steel Protective Coatings)**	**PROTECTIVE SYSTEM FAILED ALLOWING PACK RUST ON BEARING PLATES.**	4	2	2	Square Feet

General Comments

Span 2 Far Bearing

Movable Bearing

Element Number	Element Name	Total Qty	CS1 Qty	CS2 Qty	CS3 Qty	CS4 Qty	
311	Movable Bearing	1	0	0	1	0	Each
515	Steel Protective Coating	2	0	0	0	2	Square Feet

Element Number	Defect Type	Defect Description	CS	CS Qty	Maint Qty	
311	**Corrosion**	**PACK RUST PRESENT ON BEARING PLATES**	3	1	1	Each
515	**Effectiveness (Steel Protective Coatings)**	**PROTECTIVE SYSTEM FAILED ALLOWING PACK RUST ON BEARING PLATES.**	4	2	2	Square Feet

General Comments

Span 2 Near Bearing

Fixed Bearing

Element Number	Element Name	Total Qty	CS1 Qty	CS2 Qty	CS3 Qty	CS4 Qty	
313	Fixed Bearing	1	0	0	1	0	Each
515	Steel Protective Coating	2	0	0	0	2	Square Feet

Element Number	Defect Type	Defect Description	CS	CS Qty	Maint Qty	
313	**Corrosion**	**PACK RUST PRESENT ON BEARING PLATES**	3	1	1	Each
515	**Effectiveness (Steel Protective Coatings)**	**PROTECTIVE SYSTEM FAILED ALLOWING PACK RUST ON BEARING PLATES.**	4	2	2	Square Feet

General Comments

Span 2 Far Bearing

Movable Bearing

Element Number	Element Name	Total Qty	CS1 Qty	CS2 Qty	CS3 Qty	CS4 Qty	
311	Movable Bearing	1	0	0	1	0	Each
515	Steel Protective Coating	2	0	0	0	2	Square Feet

Element Number	Defect Type	Defect Description	CS	CS Qty	Maint Qty

311	**Corrosion**	**PACK RUST PRESENT ON BEARING PLATES**	3	1	1	Each
515	**Effectiveness (Steel Protective Coatings)**	**PROTECTIVE SYSTEM FAILED ALLOWING PACK RUST ON BEARING PLATES.**	4	2	2	Square Feet

General Comments

Span 2 Near Bearing

Fixed Bearing

Element Number	Element Name	Total Qty	CS1 Qty	CS2 Qty	CS3 Qty	CS4 Qty	
313	Fixed Bearing	1	0	0	1	0	Each
515	Steel Protective Coating	2	0	0	0	2	Square Feet

Element Number	Defect Type	Defect Description	CS	CS Qty	Maint Qty	
313	**Corrosion**	**PACK RUST PRESENT ON BEARING PLATES**	3	1	1	Each
515	**Effectiveness (Steel Protective Coatings)**	**PROTECTIVE SYSTEM FAILED ALLOWING PACK RUST ON BEARING PLATES.**	4	2	2	Square Feet

General Comments

Span 2 Far Bearing

Movable Bearing

Element Number	Element Name	Total Qty	CS1 Qty	CS2 Qty	CS3 Qty	CS4 Qty	
311	Movable Bearing	1	0	0	1	0	Each
515	Steel Protective Coating	2	0	0	0	2	Square Feet

Element Number	Defect Type	Defect Description	CS	CS Qty	Maint Qty	
311	**Corrosion**	**PACK RUST PRESENT ON BEARING PLATES**	3	1	1	Each
515	**Effectiveness (Steel Protective Coatings)**	**PROTECTIVE SYSTEM FAILED ALLOWING PACK RUST ON BEARING PLATES.**	4	2	2	Square Feet

General Comments

Span 3 Deck

Reinforced Concrete Deck

Element Number	Element Name	Total Qty	CS1 Qty	CS2 Qty	CS3 Qty	CS4 Qty	
12	Reinforced Concrete Deck	3,857	3,199	632	26	0	Square Feet

Element Number	Defect Type	Defect Description	CS	CS Qty	Maint Qty	
12	**Delamination/Spall**	**SPALL, 8" X 5" X 1/2" DEEP ON NORTH SIDE OF END OF DIAPHRAGM 2 WITH EXPOSED REBAR, NO SECTION LOSS**	3	1	1	Square Feet
12	**Delamination/Spall**	**SPALL/DELAMINATED AREA 4 FT LONG X 20" WIDE X 5" X 1" DEEP WITH NO EXPOSED REBAR IN RIGHT OVERHANG, AT END BENT 2**	3	4	4	Square Feet
12	**Delamination/Spall**	**SPALL/DELAMINATED AREA 6 FT LONG X 6" WIDE X 6" DEEP WITH EXPOSED REBAR WITH 5% SECTION LOSS IN RIGHT OVERHANG, 10 FT FROM END BENT 2**	3	6	6	Square Feet
12	**Exposed Rebar**	**SPALLED/DELAMINATED AREA ON OUTSIDE OF NORTH EDGE OF DECK, 15 FT LONG X FULL HEIGHT OF DECK X 3" DEEP AT BENT 2 WITH EXPOSED REBAR, NO MEASUREABLE SECTION LOSS**	3	15	30	Square Feet
12	**Abrasion/Wear (PSC/RC)**	**SCALING IN UNDERSIDE OF DECK, 2 FT X 2 FT X 1/4" DEEP IN BAY 5, 5 FT FROM END BENT 2 WITH NO EXPOSED REBAR**	2	4		Square Feet

12	**Cracking (RC and Other)**	**FULL HEIGHT VERTICAL HAIRLINE CRACKS IN EDGE OF DECK AT 2 FT SPACING FOR FULL LENGTH OF SPAN**	2	19		Square Feet
12	**Cracking (RC and Other)**	**HAIRLINE MAP CRACKING IN UNDERSIDE OF DECK IN BAY 1 AND 2**	2	400		Square Feet
12	**Delamination/Spall**	**6" DIAMETER X1" DEEP SPALL IN LEFT OVERHANG, 20 FT FROM END BENT 2 WITH EXPOSED REBAR, 5% SECTION LOSS**	2	1	1	Square Feet
12	**Efflorescence/Rust Staining**	**HAIRLINE TRANSVERSE AND MAP CRACKS WITH EFFLORESCENCE IN THE UNDERSIDE OF THE DECK, FULL WIDTH OF BAYS, ALL BAYS SIMILAR**	2	200		Square Feet
12	**Patched Areas**	**2 - SOUND PATCHES IN UNDERSIDE OF DECK IN BAY 2, UP TO 27" X 17"**	2	8		Square Feet

General Comments

Span 3 Beam 1

Plate Girder

Element Number	Element Name	Total Qty	CS1 Qty	CS2 Qty	CS3 Qty	CS4 Qty	
107	Steel Open Girder/Beam	54	0	51	3	0	Feet
515	Steel Protective Coating	508	0	494	0	14	Square Feet

Element Number	Defect Type	Defect Description	CS	CS Qty	Maint Qty	
107	**Corrosion**	**SURFACE CORROSION ON BOTTOM FLANGE AND FULL HEIGHT OF WEB AT BENT 2 FOR 3 FT WITH FLAKING OF STEEL. NO MEASUREABLE SECTION LOSS ON WEB OR BOTTOM FLANGE**	3	3	3	Feet
107	**Damage**	**2 FT HORIZONTAL CRACK IN BENT DIAPHRAGM AT BENT 2 UP TO 1/16" WIDE**	3			Feet
107	**Corrosion**	**SURFACE CORROSION THROUGHOUT TOP OF EXTERIOR BOTTOM FLANGE FOR FULL LENGTH OF BEAM, SCATTERED FRECKLED RUST THROUGHOUT WEB, TOP FLANGE AND INSIDE BOTTOM FLANGE, NO MEASUREABLE SECTION LOSS**	2	51		Feet
515	**Effectiveness (Steel Protective Coatings)**	**PROTECTIVE SYSTEM FAILED AT BEARINGS, RESULTING IN CORROSION WITH SECTION LOSS**	4	14	14	Square Feet
515	**Effectiveness (Steel Protective Coatings)**	**PROTECTIVE SYSTEM DETERIORATING ALLOWING FRECKLED RUST.**	2	494	494	Square Feet

General Comments

Span 3 Beam 2

Plate Girder

Element Number	Element Name	Total Qty	CS1 Qty	CS2 Qty	CS3 Qty	CS4 Qty	
107	Steel Open Girder/Beam	54	0	54	0	0	Feet
515	Steel Protective Coating	508	0	508	0	0	Square Feet

Element Number	Defect Type	Defect Description	CS	CS Qty	Maint Qty	
107	**Damage**	**SPALL, 18" X 3" X 2" ON BENT DIAPHRAGM IN BAY 2 AT BENT 2 WITH EXPOSED REBAR, NO SECTION LOSS**	3		2	Feet
107	**Corrosion**	**SCATTERED FRECKLED RUST THROUGHOUT WEB, TOP FLANGE AND BOTTOM FLANGE, NO MEASUREABLE SECTION LOSS**	2	54		Feet
515	**Effectiveness (Steel Protective Coatings)**	**PROTECTIVE SYSTEM DETERIORATING, ALLOWING FRECKLED RUST ALONG THE WEB AND FLANGES**	2	508	508	Square Feet

General Comments

Span 3 Beam 3

Plate Girder

Element Number	Element Name	Total Qty	CS1 Qty	CS2 Qty	CS3 Qty	CS4 Qty	
107	Steel Open Girder/Beam	54	0	53	1	0	Feet
515	Steel Protective Coating	508	0	508	0	0	Square Feet

Element Number	Defect Type	Defect Description	CS	CS Qty	Maint Qty	
107	**Corrosion**	**CORROSION ON BOTTOM FLANGE AND BEARING STIFFENER AT BENT 2 FOR 8" WITH 5/8" SECTION REMAINING ACROSS FULL FLANGE WIDTH AND 1/2" REMAINING FOR THE LOWER 2" OF BEARING STIFFENER ACROSS THE FULL STIFFENER**	3	1	1	Feet
107	**Corrosion**	**SCATTERED FRECKLED RUST THROUGHOUT WEB, TOP FLANGE AND BOTTOM FLANGE, NO MEASUREABLE SECTION LOSS**	2	53		Feet
515	**Effectiveness (Steel Protective Coatings)**	**PROTECTIVE SYSTEM DETERIORATING, ALLOWING FRECKLED RUST ALONG THE WEB AND FLANGES**	2	508	508	Square Feet

General Comments

Span 3 Beam 4

Plate Girder

Element Number	Element Name	Total Qty	CS1 Qty	CS2 Qty	CS3 Qty	CS4 Qty	
107	Steel Open Girder/Beam	54	0	53	1	0	Feet
515	Steel Protective Coating	508	0	508	0	0	Square Feet

Element Number	Defect Type	Defect Description	CS	CS Qty	Maint Qty	
107	**Corrosion**	**CORROSION ON BOTTOM FLANGE AT BENT 2 FOR 1 FT WITH 5/8" THICKNESS REMAINING ACROSS THE BOTTOM FLANGE**	3	1	1	Feet
107	**Corrosion**	**SCATTERED FRECKLED RUST THROUGHOUT WEB, TOP FLANGE AND BOTTOM FLANGE, NO MEASUREABLE SECTION LOSS**	2	53		Feet
515	**Effectiveness (Steel Protective Coatings)**	**PROTECTIVE SYSTEM DETERIORATING, ALLOWING FRECKLED RUST ALONG THE WEB AND FLANGES**	2	508	508	Square Feet

General Comments

Span 3 Beam 5

Plate Girder

Element Number	Element Name	Total Qty	CS1 Qty	CS2 Qty	CS3 Qty	CS4 Qty	
107	Steel Open Girder/Beam	54	0	52	2	0	Feet
515	Steel Protective Coating	508	0	508	0	0	Square Feet

Element Number	Defect Type	Defect Description	CS	CS Qty	Maint Qty	
107	**Corrosion**	**CORROSION ON BOTTOM FLANGE FOR 2 FT AT BENT 2 WITH SECTION LOSS, BOTTOM FLANGE HAS 3/8" SECTION REMAINING FOR FULL WIDTH OF BOTTOM FLANGE, PAR**	3	2	2	Feet
107	**Corrosion**	**CORROSION ON NORTH AND SOUTH BEARING STIFFENER AT BENT 2 WITH 5/16" SECTION REMAINING FOR LOWER 1" ACROSS BOTH STIFFENER, PAR**	3		1	Feet
107	**Corrosion**	**CORROSION ON BOTTOM FLANGE AND WEB, UP TO FULL HEIGHT AT BENT 2 WITH NO MEASUREABLE SECTION LOSS**	2	3		Feet

107	**Corrosion**	**SCATTERED FRECKLED RUST THROUGHOUT WEB, TOP FLANGE AND BOTTOM FLANGE, NO MEASUREABLE SECTION LOSS**	2	49		Feet
515	**Effectiveness (Steel Protective Coatings)**	**PROTECTIVE SYSTEM DETERIORATING, ALLOWING FRECKLED RUST ALONG THE WEB AND FLANGES**	2	508	508	Square Feet

General Comments

Span 3 Beam 6

Plate Girder

Element Number	Element Name	Total Qty	CS1 Qty	CS2 Qty	CS3 Qty	CS4 Qty	
107	Steel Open Girder/Beam	54	0	54	0	0	Feet
515	Steel Protective Coating	508	0	508	0	0	Square Feet

Element Number	Defect Type	Defect Description	CS	CS Qty	Maint Qty	
107	**Corrosion**	**SCATTERED FRECKLED RUST THROUGHOUT WEB, TOP FLANGE AND BOTTOM FLANGE, NO MEASUREABLE SECTION LOSS**	2	54		Feet
515	**Effectiveness (Steel Protective Coatings)**	**PROTECTIVE SYSTEM DETERIORATING, ALLOWING FRECKLED RUST ALONG THE WEB AND FLANGES**	2	508	508	Square Feet

General Comments

Span 3 Beam 7

Plate Girder

Element Number	Element Name	Total Qty	CS1 Qty	CS2 Qty	CS3 Qty	CS4 Qty	
107	Steel Open Girder/Beam	54	0	54	0	0	Feet
515	Steel Protective Coating	508	0	508	0	0	Square Feet

Element Number	Defect Type	Defect Description	CS	CS Qty	Maint Qty	
107	**Corrosion**	**SCATTERED FRECKLED RUST THROUGHOUT WEB, TOP FLANGE AND BOTTOM FLANGE, NO MEASUREABLE SECTION LOSS**	2	54		Feet
515	**Effectiveness (Steel Protective Coatings)**	**PROTECTIVE SYSTEM DETERIORATING, ALLOWING FRECKLED RUST ALONG THE WEB AND FLANGES**	2	508	508	Square Feet

General Comments

Span 3 Beam 8

Plate Girder

Element Number	Element Name	Total Qty	CS1 Qty	CS2 Qty	CS3 Qty	CS4 Qty	
107	Steel Open Girder/Beam	54	0	54	0	0	Feet
515	Steel Protective Coating	508	0	508	0	0	Square Feet

Element Number	Defect Type	Defect Description	CS	CS Qty	Maint Qty	
107	**Corrosion**	**SCATTERED FRECKLED RUST THROUGHOUT WEB, TOP FLANGE AND BOTTOM FLANGE, NO MEASUREABLE SECTION LOSS**	2	54		Feet
515	**Effectiveness (Steel Protective Coatings)**	**PROTECTIVE SYSTEM DETERIORATING, ALLOWING FRECKLED RUST ALONG THE WEB AND FLANGES**	2	508	508	Square Feet

General Comments

Span 3 Beam 9

Plate Girder

Element Number	Element Name	Total Qty	CS1 Qty	CS2 Qty	CS3 Qty	CS4 Qty	
107	Steel Open Girder/Beam	54	0	54	0	0	Feet
515	Steel Protective Coating	508	0	508	0	0	Square Feet

Element Number	Defect Type	Defect Description	CS	CS Qty	Maint Qty	
107	**Corrosion**	**SCATTERED FRECKLED RUST THROUGHOUT WEB, TOP FLANGE AND BOTTOM FLANGE, NO MEASUREABLE SECTION LOSS**	2	54		Feet
515	**Effectiveness (Steel Protective Coatings)**	**PROTECTIVE SYSTEM DETERIORATING, ALLOWING FRECKLED RUST ALONG THE WEB AND FLANGES**	2	508	508	Square Feet

General Comments

Span 3 Beam 10

Plate Girder

Element Number	Element Name	Total Qty	CS1 Qty	CS2 Qty	CS3 Qty	CS4 Qty	
107	Steel Open Girder/Beam	54	0	49	5	0	Feet
515	Steel Protective Coating	508	0	494	0	14	Square Feet

Element Number	Defect Type	Defect Description	CS	CS Qty	Maint Qty	
107	**Corrosion**	**CORROSION ON BOTTOM FLANGE AND LOWER 3" OF WEB AT END BENT 2 FOR 5 FT WITH NO MEASUREABLE SECTION LOSS**	3	5	5	Feet
107	**Corrosion**	**SURFACE CORROSION ON BOTTOM FLANGE AND FULL HEIGHT OF WEB AT BENT 2 FOR 3 FT WITH FLAKING OF STEEL. NO MEASUREABLE SECTION LOSS ON WEB OR BOTTOM FLANGE**	2	3		Feet
107	**Corrosion**	**SURFACE CORROSION THROUGHOUT TOP OF EXTERIOR BOTTOM FLANGE FOR FULL LENGTH OF BEAM, SCATTERED FRECKLED RUST THROUGHOUT WEB, TOP FLANGE AND INSIDE BOTTOM FLANGE, NO MEASUREABLE SECTION LOSS**	2	46		Feet
515	**Effectiveness (Steel Protective Coatings)**	**PROTECTIVE SYSTEM FAILED AT BEARINGS, RESULTING IN CORROSION WITH SECTION LOSS**	4	14	14	Square Feet
515	**Effectiveness (Steel Protective Coatings)**	**PROTECTIVE SYSTEM DETERIORATING ALLOWING FRECKLED RUST.**	2	494	494	Square Feet

General Comments

Span 3 Wearing Surface

Asphalt Wearing Surface

Element Number	Element Name	Total Qty	CS1 Qty	CS2 Qty	CS3 Qty	CS4 Qty	
510	Wearing Surface	3,564	3,501	1	62	0	Square Feet

Element Number	Defect Type	Defect Description	CS	CS Qty	Maint Qty	
510	**Crack (Wearing Surface)**	**FULL WIDTH CRACK UP TO 1/4" WIDE OVER BENT 2 WITH A SOUND PATCH, 4 FT X 2 FT IN RIGHT EAST BOUND TRAVEL LANE IN RIGHT WHEEL PATH**	3	60	60	Square Feet
510	**Patched Area/Pothole (Wearing Surface)**	**2 FT DIAMETER X 2" DEEP POTHOLE IN WEARING SURFACE IN RIGHT EASTBOUND LANE IN RIGHT WHEEL PATH AT END BENT 2**	3	2	2	Square Feet
510	**Patched Area/Pothole (Wearing Surface)**	**6" LONG X 4" WIDE POTHOLE UP TO 1" DEEP IN WEARING SURFACE IN EASTBOUND LANES, 5 FT FROM BENT 2.**	2	1		Square Feet

General Comments

Span 3 Left Bridge Rail

Steel Rail

Element Number	Element Name	Total Qty	CS1 Qty	CS2 Qty	CS3 Qty	CS4 Qty	
330	Metal Bridge Railing	54	38	0	16	0	Feet
515	Steel Protective Coating	54	54	0	0	0	Square Feet

Element Number	Defect Type	Defect Description	CS	CS Qty	Maint Qty	
330	**Damage**	**POOR CONCRETE QUALITY IN ORIGINAL BARRIER CURB (POSSIBLE ALKALI SILICA REACTION) AT BENT 2 FOR 16 FT X FULL WIDTH X FULL DEPTH OF CURB WITH EXPOSED REBAR, WITH UP TO 5% SECTION LOSS. CONCRETE IS POWDERY AND DISINTEGRATING, PM**	3	16	16	Feet

General Comments

Span 3 Right Bridge Rail

Steel Rail

Element Number	Element Name	Total Qty	CS1 Qty	CS2 Qty	CS3 Qty	CS4 Qty	
330	Metal Bridge Railing	54	36	18	0	0	Feet
515	Steel Protective Coating	54	54	0	0	0	Square Feet

Element Number	Defect Type	Defect Description	CS	CS Qty	Maint Qty	
330	**Damage**	**IMPACT DAMAGE TO METAL RAIL FOR 18 FT AT END BENT 2, SPACER PIPES ARE CRUSHED BUT RAIL IS STILL FUNCTIONAL**	2	18	18	Feet

General Comments

Span 3 Median Rail

Concrete Railing

Element Number	Element Name	Total Qty	CS1 Qty	CS2 Qty	CS3 Qty	CS4 Qty	
331	Reinforced Concrete Bridge Railing	54	0	54	0	0	Feet

Element Number	Defect Type	Defect Description	CS	CS Qty	Maint Qty	
331	**Cracking (RC and Other)**	**HAIRLINE VERTICAL CRACKS UP TO FULL HEIGHT SPACED AT 1 FT FOR FULL LENGHT OF SPAN**	2	54		Feet

General Comments

Span 3 Near Bearing

Movable Bearing

Element Number	Element Name	Total Qty	CS1 Qty	CS2 Qty	CS3 Qty	CS4 Qty	
311	Movable Bearing	1	0	0	1	0	Each
515	Steel Protective Coating	2	0	0	0	2	Square Feet

Element Number	Defect Type	Defect Description	CS	CS Qty	Maint Qty	
311	**Corrosion**	**PACK RUST PRESENT ON BEARING PLATES**	3	1	1	Each
515	**Effectiveness (Steel Protective Coatings)**	**PROTECTIVE SYSTEM FAILED ALLOWING PACK RUST ON BEARING PLATES.**	4	2	2	Square Feet

General Comments

Span 3 Far Bearing

Fixed Bearing

Element Number	Element Name	Total Qty	CS1 Qty	CS2 Qty	CS3 Qty	CS4 Qty	
313	Fixed Bearing	1	0	0	1	0	Each
515	Steel Protective Coating	2	0	0	0	2	Square Feet

Element Number	Defect Type	Defect Description	CS	CS Qty	Maint Qty	
313	**Corrosion**	**PACK RUST PRESENT ON BEARING PLATES**	3	1	1	Each
515	**Effectiveness (Steel Protective Coatings)**	**PROTECTIVE SYSTEM FAILED ALLOWING PACK RUST ON BEARING PLATES.**	4	2	2	Square Feet

General Comments

Span 3 Near Bearing

Movable Bearing

Element Number	Element Name	Total Qty	CS1 Qty	CS2 Qty	CS3 Qty	CS4 Qty	
311	Movable Bearing	1	0	0	1	0	Each
515	Steel Protective Coating	2	0	0	0	2	Square Feet

Element Number	Defect Type	Defect Description	CS	CS Qty	Maint Qty	
311	**Corrosion**	**PACK RUST PRESENT ON BEARING PLATES**	3	1	1	Each
515	**Effectiveness (Steel Protective Coatings)**	**PROTECTIVE SYSTEM FAILED ALLOWING PACK RUST ON BEARING PLATES.**	4	2	2	Square Feet

General Comments

Span 3 Near Bearing

Movable Bearing

Element Number	Element Name	Total Qty	CS1 Qty	CS2 Qty	CS3 Qty	CS4 Qty	
311	Movable Bearing	1	0	0	1	0	Each
515	Steel Protective Coating	2	0	0	0	2	Square Feet

Element Number	Defect Type	Defect Description	CS	CS Qty	Maint Qty	
311	**Corrosion**	**PACK RUST PRESENT ON BEARING PLATES**	3	1	1	Each
515	**Effectiveness (Steel Protective Coatings)**	**PROTECTIVE SYSTEM FAILED ALLOWING PACK RUST ON BEARING PLATES.**	4	2	2	Square Feet

General Comments

Span 3 Near Bearing

Movable Bearing

Element Number	Element Name	Total Qty	CS1 Qty	CS2 Qty	CS3 Qty	CS4 Qty	
311	Movable Bearing	1	0	0	1	0	Each
515	Steel Protective Coating	2	0	0	0	2	Square Feet

Element Number	Defect Type	Defect Description	CS	CS Qty	Maint Qty	
311	**Corrosion**	**PACK RUST PRESENT ON BEARING PLATES**	3	1	1	Each
515	**Effectiveness (Steel Protective Coatings)**	**PROTECTIVE SYSTEM FAILED ALLOWING PACK RUST ON BEARING PLATES.**	4	2	2	Square Feet

General Comments

Span 3 Near Bearing

Movable Bearing

Element Number	Element Name	Total Qty	CS1 Qty	CS2 Qty	CS3 Qty	CS4 Qty	
311	Movable Bearing	1	0	0	1	0	Each
515	Steel Protective Coating	2	0	0	0	2	Square Feet

Element Number	Defect Type	Defect Description	CS	CS Qty	Maint Qty	
311	**Corrosion**	**PACK RUST PRESENT ON BEARING PLATES**	3	1	1	Each
515	**Effectiveness (Steel Protective Coatings)**	**PROTECTIVE SYSTEM FAILED ALLOWING PACK RUST ON BEARING PLATES.**	4	2	2	Square Feet

General Comments

Span 3 Near Bearing

Movable Bearing

Element Number	Element Name	Total Qty	CS1 Qty	CS2 Qty	CS3 Qty	CS4 Qty	
311	Movable Bearing	1	0	0	1	0	Each
515	Steel Protective Coating	2	0	0	0	2	Square Feet

Element Number	Defect Type	Defect Description	CS	CS Qty	Maint Qty	
311	**Corrosion**	**PACK RUST PRESENT ON BEARING PLATES**	3	1	1	Each
515	**Effectiveness (Steel Protective Coatings)**	**PROTECTIVE SYSTEM FAILED ALLOWING PACK RUST ON BEARING PLATES.**	4	2	2	Square Feet

General Comments

Span 3 Near Bearing

Movable Bearing

Element Number	Element Name	Total Qty	CS1 Qty	CS2 Qty	CS3 Qty	CS4 Qty	
311	Movable Bearing	1	0	0	1	0	Each
515	Steel Protective Coating	2	0	0	0	2	Square Feet

Element Number	Defect Type	Defect Description	CS	CS Qty	Maint Qty	
311	**Corrosion**	**PACK RUST PRESENT ON BEARING PLATES**	3	1	1	Each
515	**Effectiveness (Steel Protective Coatings)**	**PROTECTIVE SYSTEM FAILED ALLOWING PACK RUST ON BEARING PLATES.**	4	2	2	Square Feet

General Comments

Span 3 Near Bearing

Movable Bearing

Element Number	Element Name	Total Qty	CS1 Qty	CS2 Qty	CS3 Qty	CS4 Qty	
311	Movable Bearing	1	0	0	1	0	Each
515	Steel Protective Coating	2	0	0	0	2	Square Feet

Element Number	Defect Type	Defect Description	CS	CS Qty	Maint Qty

311	**Corrosion**	**PACK RUST PRESENT ON BEARING PLATES**	3	1	1	Each
515	**Effectiveness (Steel Protective Coatings)**	**PROTECTIVE SYSTEM FAILED ALLOWING PACK RUST ON BEARING PLATES.**	4	2	2	Square Feet

General Comments

Span 3 Near Bearing

Movable Bearing

Element Number	Element Name	Total Qty	CS1 Qty	CS2 Qty	CS3 Qty	CS4 Qty	
311	Movable Bearing	1	0	0	1	0	Each
515	Steel Protective Coating	2	0	0	0	2	Square Feet

Element Number	Defect Type	Defect Description	CS	CS Qty	Maint Qty	
311	**Corrosion**	**PACK RUST PRESENT ON BEARING PLATES**	3	1	1	Each
515	**Effectiveness (Steel Protective Coatings)**	**PROTECTIVE SYSTEM FAILED ALLOWING PACK RUST ON BEARING PLATES.**	4	2	2	Square Feet

General Comments

Span 3 Near Bearing

Movable Bearing

Element Number	Element Name	Total Qty	CS1 Qty	CS2 Qty	CS3 Qty	CS4 Qty	
311	Movable Bearing	1	0	0	1	0	Each
515	Steel Protective Coating	2	0	0	0	2	Square Feet

Element Number	Defect Type	Defect Description	CS	CS Qty	Maint Qty	
311	**Corrosion**	**PACK RUST PRESENT ON BEARING PLATES**	3	1	1	Each
515	**Effectiveness (Steel Protective Coatings)**	**PROTECTIVE SYSTEM FAILED ALLOWING PACK RUST ON BEARING PLATES.**	4	2	2	Square Feet

General Comments

Span 3 Far Bearing

Fixed Bearing

Element Number	Element Name	Total Qty	CS1 Qty	CS2 Qty	CS3 Qty	CS4 Qty	
313	Fixed Bearing	1	0	0	1	0	Each
515	Steel Protective Coating	2	0	0	0	2	Square Feet

Element Number	Defect Type	Defect Description	CS	CS Qty	Maint Qty	
313	**Corrosion**	**PACK RUST PRESENT ON BEARING PLATES**	3	1	1	Each
515	**Effectiveness (Steel Protective Coatings)**	**PROTECTIVE SYSTEM FAILED ALLOWING PACK RUST ON BEARING PLATES.**	4	2	2	Square Feet

General Comments

End Bent 1 Cap 1

Reinforced Concrete Pier Cap

Element Number	Element Name	Total Qty	CS1 Qty	CS2 Qty	CS3 Qty	CS4 Qty	
234	Reinforced Concrete Pier Cap	76	76	0	0	0	Feet

Element Number	Defect Type	Defect Description	CS	CS Qty	Maint Qty	
234	**Damage**	**SITTING WATER ON CAP OUTSIDE GIRDER 10**	2		1	Feet

General Comments

Bent 1 Cap 1

Reinforced Concrete Pier Cap

Element Number	Element Name	Total Qty	CS1 Qty	CS2 Qty	CS3 Qty	CS4 Qty	
234	Reinforced Concrete Pier Cap	71	7	0	64	0	Feet

Element Number	Defect Type	Defect Description	CS	CS Qty	Maint Qty	
234	**Delamination/Spall**	**DELAMINATED/SPALLED AREA ON EAST FACE OF CAP AT TOP IN BAYS 2 AND 3 AND 2 FT INTO BAY 4 WITH A SPALL 2 FT X 6" X 1/2" DEEP WITH NO EXPOSED REBAR.**	3	7	7	Feet
234	**Delamination/Spall**	**DELAMINATION, 10 FT X 1 FT X 4" HIGH ON EAST FACE UNDER GIRDER 9 AT TOP EDGE**	3	10	10	Feet
234	**Delamination/Spall**	**DELAMINATION, 10 FT X 6" X 6" ON UNDERSIDE OF CAP BETWEEN COLUMNS 3 AND 4 EXTENDING UP WEST FACE**	3	10	10	Feet
234	**Delamination/Spall**	**DELAMINATION, 18" X 4" X 2" ON EAST FACE AT TOP OF CAP UNDER BAY 7**	3	2	2	Feet
234	**Delamination/Spall**	**DELAMINATION, 18" X 6" ON WEST FACE BELOW BAY 5**	3	2	2	Feet
234	**Delamination/Spall**	**DELAMINATION, 2 FT X 15" ON WEST FACE AT TOP IN BAY 5**	3	2	2	Feet
234	**Delamination/Spall**	**DELAMINATION, 3 FT X 18" ON EAST FACE BELOW BAY 6**	3	3	6	Feet
234	**Delamination/Spall**	**DELAMINATION, 8 FT LONG X FULL WIDTH OF CAP ON UNDERSIDE BETWEEN COLUMNS 2 AND 3**	3	8	24	Feet
234	**Delamination/Spall**	**DELAMINATION, 8 FT X 6" X 4" ON WEST FACE AT TOP OF CAP IN BAY 2**	3	8	8	Feet
234	**Delamination/Spall**	**DELAMINATION/SPALLED AREA, 6 FT X 2 FT X 8: ON WEST FACE AT TOP UNDER GIRDER 4 WITH A SPALL, 15" X 3" X 2" WITH EXPOSED REBAR, NO SECTION LOSS**	3		3	Feet
234	**Delamination/Spall**	**SPALL, 18" X 6" X 2" ON UNDERSIDE OF NORTH OVERHANG WITH EXPOSED REBAR, NO SECTION LOSS**	3	2	2	Feet
234	**Delamination/Spall**	**SPALL, 9 FT X 15" X 1 FT ON EAST FACE OF CAP ON TOP UNDER GIRDER 1 WITH EXPOSED REBAR WITH UP TO 10% SECTION LOSS OF ONE MAIN REINFORCING BAR, PAR**	3		9	Feet
234	**Exposed Rebar**	**SPALL, 9 FT X 15" X 1 FT ON WEST FACE OF CAP ON TOP UNDER GIRDER 1 WITH EXPOSED REBAR WITH UP TO 10% SECTION LOSS OF ONE MAIN REINFORCING BAR, PAR**	3	9	9	Feet
234	**Patched Area**	**UNSOUND PATCH ON SOUTH FACE, DELAMINATED FULL HEIGHT X FULL WIDTH WITH 1" CRACKING THROUGHOUT EXTENDING 18" ON WEST FACE AND 12" ON EAST FACE, PAR**	3	1	1	Feet

General Comments

Bent 1 Pile 1

Reinforced Concrete Column

Element Number	Element Name	Total Qty	CS1 Qty	CS2 Qty	CS3 Qty	CS4 Qty	
205	Reinforced Concrete Column	1	0	0	1	0	Each

Element Number	Defect Type	Defect Description	CS	CS Qty	Maint Qty	
205	**Cracking (RC and Other)**	**1 FT VERTICAL CRACK ON SOUTH FACE AT TOP UP TO 1/16" WIDE**	3		1	Each
205	**Delamination/Spall**	**DELAMINATION, 5 FT X 4" X 4" ON SOUTHWEST CORNER AT TOP**	3		5	Each
205	**Delamination/Spall**	**DELAMINATION, 6 FT X 1 FT X 6" ON NORTHEAST CORNER AT TOP WITH CRACKS UP TO 1/4" WIDE**	3	1	6	Each
205	**Delamination/Spall**	**DELAMINATION, 6 FT X 15" X 6" ON NORTHWEST CORNER AT TOP WITH CRACKS UP TO 1/4" WIDE**	3		12	Each
205	**Cracking (RC and Other)**	**HAIRLINE VERTICAL CRACKS IN THE WEST FACE.**	2			Each

General Comments

End Bent 1 Abutment

Reinforced Concrete Abutment

Element Number	Element Name	Total Qty	CS1 Qty	CS2 Qty	CS3 Qty	CS4 Qty	
215	Reinforced Concrete Abutment	68	42	12	14	0	Feet

Element Number	Defect Type	Defect Description	CS	CS Qty	Maint Qty	
215	**Delamination/Spall**	**DELAMINATION, 16" X 6" IN BACKWALL OF BAY 3 AT BEAM 3 ON BOTH SIDES OF BAY 3, SIMILAR IN BAY 2, BAY 4 AND BAY 6**	3	5	5	Feet
215	**Delamination/Spall**	**DELAMINATION, FULL HEIGHT OF BACKWALL X 6" WIDE IN BAY 9 AT BEAM 9**	3	1	1	Feet
215	**Delamination/Spall**	**SPALL, 12" WIDE X 18" HIGH X 1" DEEP IN BACKWALL OF BAY 8 WITH NO EXPOSED REBAR.**	3	1	1	Feet
215	**Delamination/Spall**	**SPALL, FULL HEIGHT X 1 FT WIDE X 2" DEEP ON BACKWALL ADJACENT TO GIRDER 7 WEB IN BAY 7 WITH EXPOSED REBAR, NO MEASUREABLE SECTION LOSS**	3	1	1	Feet
215	**Delamination/Spall**	**TWO DELAMINATIONS IN BAY 6 BACKWALL, 10" X 5", ALONG GIRDER 6 WEB, SIMILAR ON GIRDER 7, 8 AND 9 WEBS**	3	6	6	Feet
215	**Cracking (RC and Other)**	**SCATTERED FULL HEIGHT VERTICAL HAIRLINE CRACKS IN BACKWALL**	2	8		Feet
215	**Delamination/Spall**	**6" DIAMETER DELAMINATION IN BAY 5 BACKWALL AT BEAM 6**	2	1	1	Feet
215	**Delamination/Spall**	**SPALL AND DELAMINATED AREA, 4" X 4" X 1" DEEP ON BACKWALL OF BAY 2 AT BEAM 1 WITH NO EXPOSED REBAR, SIMILAR AT BAY 3, BEAM 3 AND BAY 5, BEAM 5**	2	3		Feet

General Comments

Bent 2 Cap 1

Reinforced Concrete Pier Cap

Element Number	Element Name	Total Qty	CS1 Qty	CS2 Qty	CS3 Qty	CS4 Qty	
234	Reinforced Concrete Pier Cap	71	8	2	61	0	Feet

Element Number	Defect Type	Defect Description	CS	CS Qty	Maint Qty	
234	**Delamination/Spall**	**DELAMINATION, 10 FT X 1 FT X 6" ON EAST FACE AT NORTH END**	3		10	Feet
234	**Delamination/Spall**	**DELAMINATION, 15 FT X FULL WIDTH ON UNDERSIDE OF CAP BETWEEN COLUMNS 2 AND 3**	3	15	15	Feet

234	**Delamination/Spall**	**DELAMINATION, 18" X 4FT ON WEST FACE BELOW GIRDER 7**	3	1	1	Feet
234	**Delamination/Spall**	**DELAMINATION, 3FT X 6" ON WEST FACE BELOW GIRDER 8**	3		1	Feet
234	**Delamination/Spall**	**DELAMINATION, 4 FT X 1 FT ON EAST FACE ABOVE COLUMN 4**	3	4	2	Feet
234	**Delamination/Spall**	**DELAMINATION, 5 FT X 1 FT ON WEST FACE BELOW BAY 5**	3	5	5	Feet
234	**Delamination/Spall**	**DELAMINATION, 5 FT X 4" X 6" ON EAST AND BOTTOM FACE BETWEEN COLUMN 1 AND 2**	3	5	5	Feet
234	**Delamination/Spall**	**DELAMINATION, 6 FT X 1 FT ON EAST FACE BELOW GIRDER 8**	3	3	6	Feet
234	**Delamination/Spall**	**DELAMINATION, 6 FT X 1 FT ON EAST FACE UNDER GIRDER 4**	3	6	6	Feet
234	**Delamination/Spall**	**DELAMINATION, 6 FT X FULL WIDTH UNDERSIDE OF CAP UNDER GIRDER 9**	3	6	6	Feet
234	**Delamination/Spall**	**DELAMINATION, 8 FT X 3" X 6" ON WEST FACE AT BOTTOM BETWEEN COLUMN 1 AND 2**	3		8	Feet
234	**Delamination/Spall**	**DELAMINATION, 8 FT X 6" ON WEST FACE AT TOP BELOW GIRDER 1**	3		6	Feet
234	**Delamination/Spall**	**SPALL, 12" X 9" X 6" ON EAST FACE OF CAP AND NORTH END AT TOP OF CAP WITH EXPOSED REBAR, NO SECTION LOSS**	3	1	1	Feet
234	**Delamination/Spall**	**SPALLED/DELAMINATED AREA, 6 FT X 18" X 1 FT ON EAST FACE AT TOP WITH EXPOSED REBAR WITH UP TO 5% SECTION LOSS IN MAIN REINFORCEMENT, PAR**	3	6	6	Feet
234	**Delamination/Spall**	**THE RIGHT END OF THE CAP HAS A FULL WIDTH X 3' LONG SPALL UP TO 3" DEEP WITH EXPOSED AND CORRODING REINFORCING STEEL TO THE UNDERSIDE OF THE CAP AND THE END OF THE CAP. MULTIPLE CRACKS UP TO 1/2" WIDE IN THE TOP FACE OF THE CAP, AND ALONG THE TOP EDGE OF THE CAP IN THE EAST FACE EXTENDING UNDERNEATH BEAM 10, AND UP TO BEAM 9, PAR**	3	9	9	Feet
234	**Delamination/Spall**	**DELAMINATION, 18" X 9" ON EAST FACE OF CAP UNDER BAY 2**	2	2	2	Feet

General Comments

Bent 2 Pile 1

Reinforced Concrete Column

Element Number	Element Name	Total Qty	CS1 Qty	CS2 Qty	CS3 Qty	CS4 Qty	
205	Reinforced Concrete Column	1	0	0	1	0	Each

Element Number	Defect Type	Defect Description	CS	CS Qty	Maint Qty	
205	**Cracking (RC and Other)**	**3 FT VERTICAL CRACK ON NORTHWEST CORNER AT TOP UP TO 1/16" WIDE**	3	1	3	Each

General Comments

Bent 2 Pile 4

Reinforced Concrete Column

Element Number	Element Name	Total Qty	CS1 Qty	CS2 Qty	CS3 Qty	CS4 Qty	
205	Reinforced Concrete Column	1	0	0	1	0	Each

Element Number	Defect Type	Defect Description	CS	CS Qty	Maint Qty	
205	**Delamination/Spall**	**DELAMINATION, 3 FT X 6" X 12" ON NORTHEAST CORNER AT TOP, SIMILAR ON SOUTHWEST CORNER AT TOP**	3	1	6	Each

General Comments

End Bent 2 Cap 1

Reinforced Concrete Pier Cap

Element Number	Element Name	Total Qty	CS1 Qty	CS2 Qty	CS3 Qty	CS4 Qty	
234	Reinforced Concrete Pier Cap	76	66	8	2	0	Feet

Element Number	Defect Type	Defect Description	CS	CS Qty	Maint Qty	
234	**Delamination/Spall**	**DELAMINATION, 2 FT X 6" ON FACE OF CAP IN BAY 9**	3	2	2	Feet
234	**Cracking (RC and Other)**	**FULL HEIGHT VERTICAL HAIRLINE CRACKS SCATTERED THROUGHOUT FACE OF CAP**	2	8		Feet

General Comments

End Bent 2 Abutment

Reinforced Concrete Abutment

Element Number	Element Name	Total Qty	CS1 Qty	CS2 Qty	CS3 Qty	CS4 Qty	
215	Reinforced Concrete Abutment	68	64	2	2	0	Feet

Element Number	Defect Type	Defect Description	CS	CS Qty	Maint Qty	
215	**Cracking (RC and Other)**	**FULL HEIGHT VERTICAL CRACK UP TO 1/32" WIDE IN BACKWALL OF BAY 5 WITH EFFLORESCENCE**	3	1	1	Feet
215	**Delamination/Spall**	**SPALL, 12" X 3" ON BACKWALL AT GIRDER 1 OUTSIDE FACE OF GIRDER WITH NO EXPOSED REBAR**	3	1	1	Feet
215	**Cracking (RC and Other)**	**FULL HEIGHT HAIRLINE VERTICAL CRACK IN BACKWALL OF BAY 4 WITH EFFLORESCENCE**	2	1		Feet
215	**Exposed Rebar**	**EXPOSED REBAR, 8" LONG IN BACKWALL OF BAY 3 AT GIRDER 4 BOTTOM FLANGE, WITH NO SECTION LOSS**	2	1	1	Feet

General Comments

Elements Verfied

Location	Name	Component	Element Name	Amount
Span 1	Deck	Reinforced Concrete Deck	Reinforced Concrete Deck	2929
Span 1	Beam 1	Plate Girder	Steel Open Girder/Beam	41
Span 1	Beam 2	Plate Girder	Steel Open Girder/Beam	41
Span 1	Beam 3	Plate Girder	Steel Open Girder/Beam	41
Span 1	Beam 4	Plate Girder	Steel Open Girder/Beam	41
Span 1	Beam 5	Plate Girder	Steel Open Girder/Beam	41
Span 1	Beam 6	Plate Girder	Steel Open Girder/Beam	41
Span 1	Beam 7	Plate Girder	Steel Open Girder/Beam	41
Span 1	Beam 8	Plate Girder	Steel Open Girder/Beam	41
Span 1	Beam 9	Plate Girder	Steel Open Girder/Beam	41
Span 1	Beam 10	Plate Girder	Steel Open Girder/Beam	41
Span 1	Left Bridge Rail	Steel Rail	Metal Bridge Railing	41
Span 1	Right Bridge Rail	Steel Rail	Metal Bridge Railing	41
Span 1	Median Rail	Concrete Railing	Reinforced Concrete Bridge Railing	41
Span 1	Wearing Surface	Asphalt Wearing Surface	Wearing Surface	2706
Span 1	Near Bearing	Fixed Bearing	Fixed Bearing	1
Span 1	Far Bearing	Movable Bearing	Movable Bearing	1
Span 1		Legacy Red Lead Primer Systems with Various Topcoats	Steel Protective Coating	2
Span 1	Far Bearing	Movable Bearing	Movable Bearing	1
Span 1	Near Bearing	Fixed Bearing	Fixed Bearing	1
Span 1	Near Bearing	Fixed Bearing	Fixed Bearing	1
Span 1	Far Bearing	Movable Bearing	Movable Bearing	1
Span 1	Far Bearing	Movable Bearing	Movable Bearing	1
Span 1	Near Bearing	Fixed Bearing	Fixed Bearing	1
Span 1	Near Bearing	Fixed Bearing	Fixed Bearing	1
Span 1	Far Bearing	Movable Bearing	Movable Bearing	1
Span 1	Far Bearing	Movable Bearing	Movable Bearing	1
Span 1	Near Bearing	Fixed Bearing	Fixed Bearing	1
Span 1	Near Bearing	Fixed Bearing	Fixed Bearing	1
Span 1	Far Bearing	Movable Bearing	Movable Bearing	1
Span 1	Far Bearing	Movable Bearing	Movable Bearing	1
Span 1	Near Bearing	Fixed Bearing	Fixed Bearing	1
Span 1	Near Bearing	Fixed Bearing	Fixed Bearing	1
Span 1	Far Bearing	Movable Bearing	Movable Bearing	1
Span 1	Far Bearing	Movable Bearing	Movable Bearing	1
Span 1	Near Bearing	Fixed Bearing	Fixed Bearing	1
Span 2	Deck	Reinforced Concrete Deck	Reinforced Concrete Deck	3571
Span 2	Beam 1	Plate Girder	Steel Open Girder/Beam	50
Span 2	Beam 2	Plate Girder	Steel Open Girder/Beam	50
Span 2	Beam 3	Plate Girder	Steel Open Girder/Beam	50
Span 2	Beam 4	Plate Girder	Steel Open Girder/Beam	50
Span 2	Beam 5	Plate Girder	Steel Open Girder/Beam	50
Span 2	Beam 6	Plate Girder	Steel Open Girder/Beam	50
Span 2	Beam 7	Plate Girder	Steel Open Girder/Beam	50

Elements Verfied

Location	Name	Component	Element Name	Amount
Span 2	Beam 8	Plate Girder	Steel Open Girder/Beam	50
Span 2	Beam 9	Plate Girder	Steel Open Girder/Beam	50
Span 2	Beam 10	Plate Girder	Steel Open Girder/Beam	50
Span 2	Left Bridge Rail	Steel Rail	Metal Bridge Railing	50
Span 2	Right Bridge Rail	Steel Rail	Metal Bridge Railing	50
Span 2	Median Rail	Concrete Railing	Reinforced Concrete Bridge Railing	50
Span 2	Expansion Joint	Standard Joint	Pourable Joint Seal	0
Span 2	Wearing Surface	Asphalt Wearing Surface	Wearing Surface	3300
Span 2	Far Bearing	Movable Bearing	Movable Bearing	1
Span 2	Near Bearing	Fixed Bearing	Fixed Bearing	1
Span 2	Near Bearing	Fixed Bearing	Fixed Bearing	1
Span 2	Far Bearing	Movable Bearing	Movable Bearing	1
Span 2	Far Bearing	Movable Bearing	Movable Bearing	1
Span 2	Near Bearing	Fixed Bearing	Fixed Bearing	1
Span 2	Near Bearing	Fixed Bearing	Fixed Bearing	1
Span 2	Far Bearing	Movable Bearing	Movable Bearing	1
Span 2	Far Bearing	Movable Bearing	Movable Bearing	1
Span 2	Near Bearing	Fixed Bearing	Fixed Bearing	1
Span 2	Near Bearing	Fixed Bearing	Fixed Bearing	1
Span 2	Far Bearing	Movable Bearing	Movable Bearing	1
Span 2	Far Bearing	Movable Bearing	Movable Bearing	1
Span 2	Near Bearing	Fixed Bearing	Fixed Bearing	1
Span 2	Near Bearing	Fixed Bearing	Fixed Bearing	1
Span 2	Far Bearing	Movable Bearing	Movable Bearing	1
Span 2	Far Bearing	Movable Bearing	Movable Bearing	1
Span 2	Near Bearing	Fixed Bearing	Fixed Bearing	1
Span 2	Near Bearing	Fixed Bearing	Fixed Bearing	1
Span 2	Far Bearing	Movable Bearing	Movable Bearing	1
Span 3	Deck	Reinforced Concrete Deck	Reinforced Concrete Deck	3857
Span 3	Beam 1	Plate Girder	Steel Open Girder/Beam	54
Span 3	Beam 2	Plate Girder	Steel Open Girder/Beam	54
Span 3	Beam 3	Plate Girder	Steel Open Girder/Beam	54
Span 3	Beam 4	Plate Girder	Steel Open Girder/Beam	54
Span 3	Beam 5	Plate Girder	Steel Open Girder/Beam	54
Span 3	Beam 6	Plate Girder	Steel Open Girder/Beam	54
Span 3	Beam 7	Plate Girder	Steel Open Girder/Beam	54
Span 3	Beam 8	Plate Girder	Steel Open Girder/Beam	54
Span 3	Beam 9	Plate Girder	Steel Open Girder/Beam	54
Span 3	Beam 10	Plate Girder	Steel Open Girder/Beam	54
Span 3	Left Bridge Rail	Steel Rail	Metal Bridge Railing	54
Span 3	Right Bridge Rail	Steel Rail	Metal Bridge Railing	54
Span 3	Median Rail	Concrete Railing	Reinforced Concrete Bridge Railing	54
Span 3	Expansion Joint	Standard Joint	Pourable Joint Seal	0
Span 3	Wearing Surface	Asphalt Wearing Surface	Wearing Surface	3564
Span 3	Far Bearing	Fixed Bearing	Fixed Bearing	1

Elements Verfied

Location	Name	Component	Element Name	Amount
Span 3	Near Bearing	Movable Bearing	Movable Bearing	1
Span 3	Near Bearing	Movable Bearing	Movable Bearing	1
Span 3	Far Bearing	Fixed Bearing	Fixed Bearing	1
Span 3	Far Bearing	Fixed Bearing	Fixed Bearing	1
Span 3	Near Bearing	Movable Bearing	Movable Bearing	1
Span 3	Near Bearing	Movable Bearing	Movable Bearing	1
Span 3	Far Bearing	Fixed Bearing	Fixed Bearing	1
Span 3	Far Bearing	Fixed Bearing	Fixed Bearing	1
Span 3	Near Bearing	Movable Bearing	Movable Bearing	1
Span 3	Near Bearing	Movable Bearing	Movable Bearing	1
Span 3	Far Bearing	Fixed Bearing	Fixed Bearing	1
Span 3	Far Bearing	Fixed Bearing	Fixed Bearing	1
Span 3	Near Bearing	Movable Bearing	Movable Bearing	1
Span 3	Near Bearing	Movable Bearing	Movable Bearing	1
Span 3	Far Bearing	Fixed Bearing	Fixed Bearing	1
Span 3	Far Bearing	Fixed Bearing	Fixed Bearing	1
Span 3	Near Bearing	Movable Bearing	Movable Bearing	1
Span 3	Near Bearing	Movable Bearing	Movable Bearing	1
Span 3	Far Bearing	Fixed Bearing	Fixed Bearing	1
Bent 1	Cap 1	Reinforced Concrete Pier Cap	Reinforced Concrete Pier Cap	71
Bent 1	Pile 1	Reinforced Concrete Column	Reinforced Concrete Column	1
Bent 1	Pile 2	Reinforced Concrete Column	Reinforced Concrete Column	1
Bent 1	Pile 3	Reinforced Concrete Column	Reinforced Concrete Column	1
Bent 1	Pile 4	Reinforced Concrete Column	Reinforced Concrete Column	1
End Bent 1	Cap 1	Reinforced Concrete Pier Cap	Reinforced Concrete Pier Cap	76
End Bent 1	Abutment	Reinforced Concrete Abutment	Reinforced Concrete Abutment	68
Bent 2	Cap 1	Reinforced Concrete Pier Cap	Reinforced Concrete Pier Cap	71
Bent 2	Pile 1	Reinforced Concrete Column	Reinforced Concrete Column	1
Bent 2	Pile 2	Reinforced Concrete Column	Reinforced Concrete Column	1
Bent 2	Pile 3	Reinforced Concrete Column	Reinforced Concrete Column	1
Bent 2	Pile 4	Reinforced Concrete Column	Reinforced Concrete Column	1
End Bent 2	Cap 1	Reinforced Concrete Pier Cap	Reinforced Concrete Pier Cap	76
End Bent 2	Abutment	Reinforced Concrete Abutment	Reinforced Concrete Abutment	68

General Inspection Notes

Bent 1	Footing
NOT VISIBLE	
Span 2	Expansion Joint
NOT VISIBLE DUE TO WEARING SURFACE	
Span 3	Expansion Joint
NOT VISIBLE DUE TO WEARING SURFACE.	

National Bridge and NC Inspection Items

Structure Number: 430243 **Inspection Date:** 02/12/2021

National Bridge Inventory Items

Item	Grade Scale	Grade
Item 58: Deck	0 - 9 , N	**5**
Item 59: Superstructure	0 - 9 , N	**5**
Item 60: Substructure	0 - 9 , N	**5**
Item 61: Channel and Channel Protection	0 - 9 , N	**N**
Item 62: Culvert	0 - 9 , N	**N**
Item 71: Waterway Adequacy	0 - 9 , N	**N**
Item 72: Approach Roadway Alignment	0 - 9 , N	**8**

Note: If NBI Inspection Item is not present, code NBI item with "N"

NC SMU Inspection Items

Item	Grade Scale	Grade	Maint. Qty.	Maint. Code
Deck Debris	G, F, P, or C	**G**	**0**	**3376**
Drainage System	G, F, P, or C	**G**	**0**	**3332**
Utilities	G, F, P, or C			
Slope Protection	G, F, P, or C		**0**	**3352**
Scour	G, F, P, or C			
Wingwall	G, F, P, or C	**G**	**0**	**3350**
Field Scour Evaluation				
Drift	G, F, P, or C		**0**	**3366**
Fender System	G, F, P, or C		**0**	**3364**
Movable Span Machinery	G, F, P, or C			
Response to Live Load	G, F, P, or C	**G**		
Superstructure Paint Code		**A**		

Note: If NC SMU Insepction Item is not present, leave NC SMU item blank

Inspection Information

Item	Grade Scale	Grade
Sign Noticed Issued	YES/NO	**N**
Priority Maintenance Request Submitted	YES/NO	**Y**
Inspection Time	Hours	**8**
Traffic Control Time	Hours	
Snooper Time	Hours	
Ladder Used	YES/NO	**Y**
Bucket Truck Used	YES/NO	**N**
Boat Used	YES/NO	**N**
Other Equipment Used	YES/NO	**N**
Portion of Structure in > 3' of water	YES/NO	**N**

National Bridge and NC SMU Inspection Item Details

Structure Number: 430243 **Inspection Date:** 02/12/2021

Item	Deck - Item 58	**Grade**	5	**Maint Code**		**Qty.**	0
Details	SPALLS AND DELAMINATIONS THROUGHOUT UNDERSIDE OF DECK						
Item	Superstructure - Item 59	**Grade**	5	**Maint Code**		**Qty.**	0
Details	CORROSION WITH SECTION LOSS ON VARIOUS BEAM ENDS THROUGHT SPAN						
Item	Substructure - Item 60	**Grade**	5	**Maint Code**		**Qty.**	0
Details	SPALLS, DELAMINATIONS AND CRACKING THROUGHOUT SUBSTRUCTURE ELEMENTS						
Item	Priority Maintenance Issued	**Grade**	Y	**Maint Code**		**Qty.**	0
Details	ISSUED FOR SPALLS IN SUBSTRUCTURE ELEMENTS WITH EXPOSED REBAR WITH SECTION LOSS AND SECTION LOSS IN BEAMS SCATTERED THROUGHOUT BRIDGE.						

Span 1 Beam 10: CORROSION ON LEFT SIDE OF BOTTOM FLANGE AT END BENT 1 WITH SECTION LOSS, 6" LONG X FULL WIDTH OF FLANGE WITH 7/16" THICKNESS REMAINING, PAR

Span 1 Beam 10: CORROSION ON OUTSIDE FACE OF WEB AT END BENT 1 FOR 30" LONG X 12" HIGH THEN 24" LONG X 6" HIGH WITH SECTION LOSS UP TO 5/16" SECTION REMAINING IN WEB

Span 1 Beam 10: CORROSION ON OUTSIDE FACE OF WEB AT END BENT 1 FOR 30" LONG X 12" HIGH THEN 24" LONG X 6" HIGH WITH SECTION LOSS UP TO 5/16" SECTION REMAINING IN WEB

Bent 1 Cap 1: SPALL, 9 FT X 15" X 1 FT ON EAST FACE OF CAP ON TOP UNDER GIRDER 1 WITH EXPOSED REBAR WITH UP TO 10% SECTION LOSS OF ONE MAIN REINFORCING BAR, PAR

Bent 1 Cap 1: SPALL, 9 FT X 15" X 1 FT ON WEST FACE OF CAP ON TOP UNDER GIRDER 1 WITH EXPOSED REBAR WITH UP TO 10% SECTION LOSS OF ONE MAIN REINFORCING BAR, PAR

Bent 1 Cap 1: UNSOUND PATCH ON SOUTH FACE, DELAMINATED FULL HEIGHT X FULL WIDTH WITH 1" CRACKING THROUGHOUT EXTENDING 18" ON WEST FACE AND 12" ON EAST FACE, PAR

Bent 2 Cap 1: THE RIGHT END OF THE CAP HAS A FULL WIDTH X 3' LONG SPALL UP TO 3" DEEP WITH EXPOSED AND CORRODING REINFORCING STEEL TO THE UNDERSIDE OF THE CAP AND THE END OF THE CAP. MULTIPLE CRACKS UP TO 1/2" WIDE IN THE TOP FACE OF THE CAP, AND ALONG THE TOP EDGE OF THE CAP IN THE EAST FACE EXTENDING UNDERNEATH BEAM 10, AND UP TO BEAM 9, PAR

Bent 2 Cap 1: THE RIGHT END OF THE CAP HAS A FULL WIDTH X 3' LONG SPALL UP TO 3" DEEP WITH EXPOSED AND CORRODING REINFORCING STEEL TO THE UNDERSIDE OF THE CAP AND THE END OF THE CAP. MULTIPLE CRACKS UP TO 1/2" WIDE IN THE TOP FACE OF THE CAP, AND ALONG THE TOP EDGE OF THE CAP IN THE EAST FACE EXTENDING UNDERNEATH BEAM 10, AND UP TO BEAM 9, PAR

Bent 2 Cap 1: SPALLED/DELAMINATED AREA, 6 FT X 18" X 1 FT ON EAST FACE AT TOP WITH EXPOSED REBAR WITH UP TO 5% SECTION LOSS IN MAIN REINFORCEMENT, PAR

Span 1 Beam 1: CORROSION WITH SECTION LOSS ON BOTTOM FLANGE AND WEB OF BEAM AT END BENT 1. WEB SECTION IS FULL HEIGHT X 2" LONG AT BACKWALL TRANSITIONING TO 3 FT LONG X 3" HIGH X 9/16" SECTION REMAINING. BOTTOM FLANGE HAS SECTION LOSS FOR 5 FT LONG X FULL WIDTH OF FLANGE X 9/16" SECTION REMAINING AT END BENT BACKWALL

Span 1 Beam 1: CORROSION WITH SECTION LOSS ON BOTTOM FLANGE AND WEB OF BEAM AT END BENT 1. WEB SECTION IS FULL HEIGHT X 2" LONG AT BACKWALL TRANSITIONING TO 3 FT LONG X 3" HIGH X 9/16" SECTION REMAINING. BOTTOM FLANGE HAS SECTION LOSS FOR 5 FT LONG X FULL WIDTH OF FLANGE X 9/16" SECTION REMAINING AT END BENT BACKWALL

Span 1 Beam 10: CORROSION ON BOTTOM FLANGE AND LOWER 8" OF WEB AT END BENT 1 WITH SECTION LOSS. WEB HAS 7/16" SECTION REMAINING FOR 2 FT OF LENGTH AT END BENT 1. BOTTOM FLANGE HAS 5/8" SECTION REMAINING ACROSS FULL WIDTH OF FLANGE FOR 4 FT AT END BENT 1

Span 1 Deck: HAIRLINE TRANSVERSE CRACKS WITH EFFLORESCENCE IN THE UNDERSIDE OF THE DECK, FULL WIDTH OF BAYS, ALL BAYS

Span 1 Deck: SPALL, 6" X 3" X 1.5" DEEP ON UNDERSIDE OF NORTH OVERHANG, 8 FT FROM END BENT 1 WITH EXPOSED REBAR, NO SECTION LOSS

Span 1 Deck: SOUND PATCH, UNDERSIDE OF BAY 2 AT BEAM 3, 1 FT WIDE X 12FT LONG ON BOTH SIDES OF BEAM. SIMILAR AT BEAM 4 AND 5.

Span 1 Deck: UNSOUND PATCH ON UNDERSIDE OF DECK IN BAY 5 AT BEAM 6, 12 FT FROM END BENT 1, 4 FT LONG X 1 FT WIDE

Span 1 Deck: SPALL WITH EXPOSED REBAR, 22" X 7" X 1" DEEP ON UNDERSIDE OF DECK IN BAY 6, 10 FT FROM END BENT 1 WITH NO MEASUREABLE SECTION LOSS

Span 1 Deck: 3 DIAGONAL HAIRLINE CRACKS UP TO 8 FT LONG IN UNDERSIDE OF DECK IN BAY 7 AT END BENT 1 WITH EFFLORESCENCE

Span 1 Deck: UNSOUND PATCH, 36" X 28" ON UNDERSIDE OF DECK IN BAY 9 NEAR MIDSPAN WITH HAIRLINE CRACKS THROUGHOUT AND A DELAMINATION 10" X 5".

End Bent 1 Abutment: SPALL AND DELAMINATED AREA, 4" X 4" X 1" DEEP ON BACKWALL OF BAY 2 AT BEAM 1 WITH NO EXPOSED REBAR, SIMILAR AT BAY 3, BEAM 3 AND BAY 5, BEAM 5

End Bent 1 Abutment: SCATTERED FULL HEIGHT VERTICAL HAIRLINE CRACKS IN BACKWALL

End Bent 1 Abutment: DELAMINATION, 16" X 6" IN BACKWALL OF BAY 3 AT BEAM 3 ON BOTH SIDES OF BAY 3, SIMILAR IN BAY 2, BAY 4 AND BAY 6

End Bent 1 Abutment: SPALL, FULL HEIGHT X 1 FT WIDE X 2" DEEP ON BACKWALL ADJACENT TO GIRDER 7 WEB IN BAY 7 WITH EXPOSED REBAR, NO MEASUREABLE SECTION LOSS

End Bent 1 Abutment: SPALL, 12" WIDE X 18" HIGH X 1" DEEP IN BACKWALL OF BAY 8 WITH NO EXPOSED REBAR.

End Bent 1 Abutment: DELAMINATION, FULL HEIGHT OF BACKWALL X 6" WIDE IN BAY 9 AT BEAM 9

Span 1 Beam 1: CORROSION ON BOTTOM FLANGE AND WEB AT BENT 1 WITH NO MEASUREBALE SECTION LOSS

Span 1 Beam 2: SCATTERED AREAS OF FRECKLED RUST THROUGHOUT BOTTOM FLANGE, WEB AND TOP FLANGE

Span 1 Beam 3: SCATTERED AREAS OF FRECKLED RUST THROUGHOUT BOTTOM FLANGE, WEB AND TOP FLANGE

Span 1 Deck: SPALL, 18" X 6" X 4" DEEP IN UNDERSIDE OF SOUTH OVERHANG NEAR BENT 1 WITH EXPOSED REBAR, NO SECTION LOSS

Span 1 Deck: SPALLED PATCHES IN UNDERSIDE OF RIGHT OVERHANG AT MIDSPAN 10 FT X 2 FT WITH EXPOSED REBAR, NO SECTION LOSS

Span 1 Deck: SPALL WITH EXPOSED REBAR, 18" X 18" X 3" DEEP ON UNDERSIDE OF RIGHT OVERHANG, 15 FT FROM BENT 1

Span 1 Beam 5: CORROSION ON TOP OF BOTTOM FLANGE ON RIGHT SIDE AT BENT 1, 6" X 11 FT LONG WITH CORROSION IN RIGHT SIDE OF WEB AT BOTTOM FLANGE, 11 FT LONG X 2" HIGH WITH NO MEASUREABLE SECTION LOSS

Span 1 Beam 10: SPALL WITH EXPOSED REBAR IN END DIAPHRAGM AT BENT 1 OUTSIDE BEAM 10, 18" X 1 FT X 8" WITH EXPOSED REBAR, NO MEASUREABLE SECTION LOSS

Span 2 Deck: SPALL, FULL HEIGHT X 6" X 1.5" WIDE ON SOUTH END OF DECK/DIAPHRAGM WITH EXPOSED REBAR, NO SECTION LOSS

Span 2 Deck: SPALL, 2.5 FT X 1.5 FT X 3" DEEP ON UNDERSIDE OF NORTH OVERHANG AT MIDSPAN WITH EXPOSED REBAR, NO SECTION LOSS

Span 3 Beam 1: SURFACE CORROSION THROUGHOUT TOP OF EXTERIOR BOTTOM FLANGE FOR FULL LENGTH OF BEAM, SCATTERED FRECKLED RUST THROUGHOUT WEB, TOP FLANGE AND INSIDE BOTTOM FLANGE, NO MEASUREABLE SECTION LOSS

Span 3 Beam 3: SCATTERED FRECKLED RUST THROUGHOUT WEB, TOP FLANGE AND BOTTOM FLANGE, NO MEASUREABLE SECTION LOSS

Span 3 Beam 10: SURFACE CORROSION THROUGHOUT TOP OF EXTERIOR BOTTOM FLANGE FOR FULL LENGTH OF BEAM, SCATTERED FRECKLED RUST THROUGHOUT WEB, TOP FLANGE AND INSIDE BOTTOM FLANGE, NO MEASUREABLE SECTION LOSS

Span 3 Deck: SPALL/DELAMINATED AREA 6 FT LONG X 6" WIDE X 6" DEEP WITH EXPOSED REBAR WITH 5% SECTION LOSS IN RIGHT OVERHANG, 10 FT FROM END BENT 2

Span 3 Deck: SPALL/DELAMINATED AREA 4 FT LONG X 20" WIDE X 5" X 1" DEEP WITH NO EXPOSED REBAR IN RIGHT OVERHANG, AT END BENT 2

Span 3 Deck: 2 - SOUND PATCHES IN UNDERSIDE OF DECK IN BAY 2, UP TO 27" X 17"

Span 3 Deck: HAIRLINE TRANSVERSE AND MAP CRACKS WITH EFFLORESCENCE IN THE UNDERSIDE OF THE DECK, FULL WIDTH OF BAYS, ALL BAYS SIMILAR

Span 3 Deck: HAIRLINE MAP CRACKING IN UNDERSIDE OF DECK IN BAY 1 AND 2

Span 3 Deck: SCALING IN UNDERSIDE OF DECK, 2 FT X 2 FT X 1/4" DEEP IN BAY 5, 5 FT FROM END BENT 2 WITH NO EXPOSED REBAR

Span 3 Deck: 6" DIAMETER X1" DEEP SPALL IN LEFT OVERHANG, 20 FT FROM END BENT 2 WITH EXPOSED REBAR, 5% SECTION LOSS

Span 3 Deck: FULL HEIGHT VERTICAL HAIRLINE CRACKS IN EDGE OF DECK AT 2 FT SPACING FOR FULL LENGTH OF SPAN

End Bent 2 Abutment: SPALL, 12" X 3" ON BACKWALL AT GIRDER 1 OUTSIDE FACE OF GIRDER WITH NO EXPOSED REBAR

End Bent 2 Abutment: EXPOSED REBAR, 8" LONG IN BACKWALL OF BAY 3 AT GIRDER 4 BOTTOM FLANGE, WITH NO SECTION LOSS

End Bent 2 Cap: FULL HEIGHT VERTICAL HAIRLINE CRACKS SCATTERED THROUGHOUT FACE OF CAP

End Bent 2 Abutment: FULL HEIGHT VERTICAL CRACK UP TO 1/32" WIDE IN BACKWALL OF BAY 5 WITH EFFLORESCENCE

End Bent 2 Cap 1: DELAMINATION, 2 FT X 6" ON FACE OF CAP IN BAY 9

Span 3 Far Bearing: PACK RUST PRESENT ON BEARING PLATES

Span 3 Beam 2: SPALL, 18" X 3" X 2" ON BENT DIAPHRAGM IN BAY 2 AT BENT 2 WITH EXPOSED REBAR, NO SECTION LOSS

Bent 1 Cap 1: DELAMINATION, 10 FT X 1 FT X 4" HIGH ON EAST FACE UNDER GIRDER 9 AT TOP EDGE

Bent 1 Cap 1: DELAMINATION/SPALLED AREA, 6 FT X 2 FT X 8: ON WEST FACE AT TOP UNDER GIRDER 4 WITH A SPALL, 15" X 3" X 2" WITH EXPOSED REBAR, NO SECTION LOSS

Bent 1 Cap 1: DELAMINATION, 8 FT LONG X FULL WIDTH OF CAP ON UNDERSIDE BETWEEN COLUMNS 2 AND 3

Bent 1 Pile 1: 1 FT VERTICAL CRACK ON SOUTH FACE AT TOP UP TO 1/16" WIDE

Bent 1 Pile 1: DELAMINATION, 6 FT X 1 FT X 6" ON NORTHEAST CORNER AT TOP WITH CRACKS UP TO 1/4" WIDE

Bent 1 Cap 1: DELAMINATED/SPALLED AREA ON EAST FACE OF CAP AT TOP IN BAYS 2 AND 3 AND 2 FT INTO BAY 4 WITH A SPALL 2 FT X 6" X 1/2" DEEP WITH NO EXPOSED REBAR.

Bent 2 Cap 1: DELAMINATION, 10 FT X 1 FT X 6" ON EAST FACE AT NORTH END

Bent 2 Cap 1: DELAMINATION, 15 FT X FULL WIDTH ON UNDERSIDE OF CAP BETWEEN COLUMNS 2 AND 3

Bent 2 Cap 1: DELAMINATION, 6 FT X 1 FT ON EAST FACE BELOW GIRDER 8

Bent 2 Pile 1: 3 FT VERTICAL CRACK ON NORTHWEST CORNER AT TOP UP TO 1/16" WIDE

Span 2 Beam 1: CORROSION ON BOTTOM FLANGE AND WEB AT BENT 1 FOR 4 FT WITH SECTION LOSS ON BOTTOM FLANGE. BOTTOM FLANGE HAS 7/16" REMAINING FOR 1 FT AT BENT 1 FOR FULL WIDTH OF FLANGE. NO MEASUREABLE SECTION LOSS IN WEB

Span 2 Beam 1: CORROSION IN WEB AT BENT 1 FOR 3 FT X UP TO 12" IN HEIGHT WITH NO MEASUREABLE SECTION LOSS

Bent 1 Cap 1: SPALL, 9 FT X 15" X 1 FT ON EAST FACE OF CAP ON TOP UNDER GIRDER 1 WITH EXPOSED REBAR WITH UP TO 10% SECTION LOSS OF ONE MAIN REINFORCING BAR, PAR

Span 1 Beam 1: CORROSION ON BOTTOM FLANGE, LOWER 4" OF WEB AND BEARING STIFFENER AT BENT 1 IN BAY 1 FOR 8 FT WITH SECTION LOSS. BOTTOM FLANGE HAS 7/16" SECTION REMAINING ACROSS FULL WIDTH OF FLANGE. WEB HAS 7/16" SECTION REMAINING FOR 5 FT. BEARING STIFFENER HAS 3/16" SECTION REMAINING ACROSS FULL BEARING AND UP 2.5", PAR

Span 1 Beam 1: CORROSION ON BOTTOM FLANGE, LOWER 4" OF WEB AND BEARING STIFFENER AT BENT 1 IN BAY 1 FOR 8 FT WITH SECTION LOSS. BOTTOM FLANGE HAS 7/16" SECTION REMAINING ACROSS FULL WIDTH OF FLANGE. WEB HAS 7/16" SECTION REMAINING FOR 5 FT. BEARING STIFFENER HAS 3/16" SECTION REMAINING ACROSS FULL BEARING AND UP 2.5", PAR

Span 1 Beam 10: CORROSION ON BOTTOM FLANGE AND WEB AT BENT 1 WITH SECTION LOSS FOR 4 FT. SECTION LOSS IN BEARING STIFFENER UP TO 100% WITH A HOLE, 2" WIDE X 1/2" HIGH UNDER BENT DIAPHRAGM. BOTTOM FLANGE HAS 11/16" SECTION REMAINING OVER 4 FT AT BENT 1 ACROSS FULL WIDTH OF FLANGE, PAR

Span 1 Beam 10: CORROSION WITH SECTION LOSS IN WEB AT BENT 1 BEHIND BEARING STIFFENER, 8" X 8" WITH UP TO 100% SECTION LOSS, PAR

Span 1 Beam 10: CORROSION WITH SECTION LOSS IN WEB FOR 6 FT X UP TO 4" HIGH AT BENT 1 WITH 7/16" SECTION REMAINING IN WEB.

Span 2 Beam 10: CORROSION ON BOTTOM FLANGE AND LOWER 4" OF WEB AT BENT 1 WITH NO MEASUREABLE SECTION LOSS FOR 4 FT

Span 2 Beam 10: PROTECTIVE SYSTEM DETERIORATING, ALLOWING FRECKLED RUST TO FORM ON THE WEB AND FLANGES THROUGHOUT. THE EXTERIOR HALF OF THE BOTTOM FLANGE, TOP FACE, HAS FULL LENGTH SURFACE CORROSION

Span 3 Beam 3: CORROSION ON BOTTOM FLANGE AND BEARING STIFFENER AT BENT 2 FOR 8" WITH 5/8" SECTION REMAINING ACROSS FULL FLANGE WIDTH AND 1/2" REMAINING FOR THE LOWER 2" OF BEARING STIFFENER ACROSS THE FULL STIFFENER

Span 3 Beam 3: CORROSION ON BOTTOM FLANGE AND BEARING STIFFENER AT BENT 2 FOR 8" WITH 5/8" SECTION REMAINING ACROSS FULL FLANGE WIDTH AND 1/2" REMAINING FOR THE LOWER 2" OF BEARING STIFFENER ACROSS THE FULL STIFFENER

Span 3 Beam 4: CORROSION ON BOTTOM FLANGE AT BENT 2 FOR 1 FT WITH 5/8" THICKNESS REMAINING ACROSS THE BOTTOM FLANGE

Span 3 Beam 5: CORROSION ON BOTTOM FLANGE FOR 2 FT AT BENT 2 WITH SECTION LOSS, BOTTOM FLANGE HAS 3/8" SECTION REMAINING FOR FULL WIDTH OF BOTTOM FLANGE, PAR

Span 3 Beam 5: CORROSION ON NORTH AND SOUTH BEARING STIFFENER AT BENT 2 WITH 5/16" SECTION REMAINING FOR LOWER 1" ACROSS BOTH STIFFENER, PAR

Span 3 Beam 10: SURFACE CORROSION ON BOTTOM FLANGE AND FULL HEIGHT OF WEB AT BENT 2 FOR 3 FT WITH FLAKING OF STEEL. NO MEASUREABLE SECTION LOSS ON WEB OR BOTTOM FLANGE

Span 1 Wearing Surface: FULL WIDTH CRACKS UP TO 1/2" WIDE OVER END BENT 1, 2 FT WIDE AREA

Span 1 Median Rail: HAIRLINE VERTICAL CRACKS UP TO FULL HEIGHT SPACED AT 1 FT FOR FULL LENGHT OF SPAN

Span 2 Wearing Surface: FULL WIDTH CRACK UP TO 1/2" WIDE OVER BENT 1

Span 3 Wearing Surface: FULL WIDTH CRACK UP TO 1/4" WIDE OVER BENT 2 WITH A SOUND PATCH, 4 FT X 2 FT IN RIGHT EAST BOUND TRAVEL LANE IN RIGHT WHEEL PATH

Span 2 Wearing Surface: 6" LONG X 4" WIDE POTHOLE UP TO 1" DEEP IN WEARING SURFACE AT MIDSPAN IN EASTBOUND LANES

Span 3 Wearing Surface: 2 FT DIAMETER X 2" DEEP POTHOLE IN WEARING SURFACE IN RIGHT EASTBOUND LANE IN RIGHT WHEEL PATH AT END BENT 2

Structure Data Worksheet

Span Profile

County: **HAYWOOD** Structure Number: **430243**

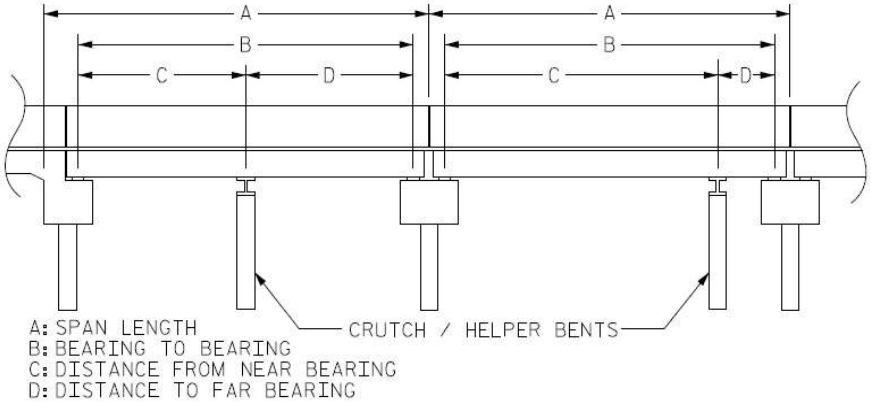

Span Number	Span Length	Bearing to Bearing	Crutch/ Helper Bent	Distance to Near Bearing	Distance to Far Bearing
1	41.000	39.000			
2	50.000	48.083			
3	54.000	52.000			

Structure Number: 430243 Span: 2 Route Name: NC 215

VERTICAL CLEARANCE LOOKING NORTH

Route Number: 31002150	**Route Name:** NC 215			**Reference Feature:** H
Minimum Vertical Clearance 15.083 feet	**Maximum Minimum Vertical Clearance** 16.291 feet			
Total Horizontal Clearance 42.300 feet	**Lateral Clearances: Left:** 3.800 feet **Right** 2.500 feet			
☐ **Base Highway Network**	**LRS Inventory Route, Sub Route Number**			
Milepost: 0.000	**Number of Lanes:** 3	**ADT:** 12000	**Year of ADT:** 2016	**Percentage of Trucks:** 6
☑ **National Highway System**			☐ **STRAHNET Highway Designator**	
Functional Classification 16 Local Minor Arterial			**Direction of Traffic:** 2 2 - way traffic	

WELDED STEEL PLATES ON TOP OF BOTTOM FLANGE AND BOTTOM OF TOP FLANGE, 3" WIDE X 1/2" THICK AT MIDSPAN STARTING AT 9 FT FROM END BENT 1, SIMILAR ON BEAMS 2, 3, 4, 7, 8, AND 9

WELDED STEEL PLATES ON TOP OF BOTTOM FLANGE AND BOTTOM OF TOP FLANGE, 3" WIDE X 1/2" THICK AT MIDSPAN STARTING AT 9 FT FROM END BENT 1, SIMILAR ON BEAMS 2, 3, 4, 7, 8 AND 9

NORTHEAST WINGWALL, OTHERS SIMILAR

TYPICAL END BENT BEARING

END BENT 2, END BENT 1 SIMILAR

BENT 1, BENT 2 SIMILAR

UNDERSIDE OF SUPERSTRUCTURE SPAN 2, SPAN 1 AND 3 SIMILAR

TYPICAL INTERMEDIATE DIAPHRAGM

VERTICAL CLEARANCE LOOKING NORTH

SOUTH PROFILE

VERTICAL CLEARANCE LOOKING SOUTH

NORTH END OF BENT 2 CAP, TYPICAL

NORTH PROFILE

LADDER PHOTO

TYPICAL BENT BEARING

LOOKING EAST

LOOKING WEST

WEST APPROACH LOOKING WEST

LEFT BARRIER RAIL, RIGHT SIMILAR

NORTHEAST GUARDRAIL ATTACHMENT, TYPICAL

NORTHEAST GUARDRAIL POST SPACING, TYPICAL

NORTHEAST GUARDRAIL TRANSITION, TYIPCAL

LOOKING NORTH

EAST APPROACH LOOKING EAST

NORTHEAST WINGWALL

APPROACH SLAB PAVED OVER

TYPICAL ASPHALT WEARING SURFACE

JOINT AT END BENT 2 PAVED OVER, END BENT 1 SIMILAR

JOINT AT BENT 2 PAVED OVER, BENT 1 SIMILAR

MEDIAN BARRIER

LOOKING SOUTH

BRIDGE INSPECTOR'S RECOMMENDATION FOR MAINTENANCE REPAIRS

Bridge: 430243 County HAYWOOD Date:

These Repairs Should Be Made Within Twelve Months From Date Of This Inspection

MMS Code	Description of Function	Unit	Quantity	Remarks	Est. Cost
3314	Maintain Steel Superstructure Components	LF	1	Span 1 Beam 10: CORROSION ON LEFT SIDE OF BOTTOM FLANGE AT END BENT 1 WITH SECTION LOSS, 6" LONG X FULL WIDTH OF FLANGE WITH 7/16" THICKNESS REMAINING, PAR	
3314	Maintain Steel Superstructure Components	LF	5	Span 1 Beam 10: CORROSION ON OUTSIDE FACE OF WEB AT END BENT 1 FOR 30" LONG X 12" HIGH THEN 24" LONG X 6" HIGH WITH SECTION LOSS UP TO 5/16" SECTION REMAINING IN WEB, PAR	
3314	Maintain Steel Superstructure Components	LF	8	Span 1 Beam 1: CORROSION ON BOTTOM FLANGE, LOWER 4" OF WEB AND BEARING STIFFENER AT BENT 1 IN BAY 1 FOR 8 FT WITH SECTION LOSS. BOTTOM FLANGE HAS 7/16" SECTION REMAINING ACROSS FULL WIDTH OF FLANGE. WEB HAS 7/16" SECTION REMAINING FOR 5 FT. BEARING STIFFENER HAS 3/16" SECTION REMAINING ACROSS FULL BEARING AND UP 2.5", PAR	
3314	Maintain Steel Superstructure Components	LF	1	Span 1 Beam 10: CORROSION WITH SECTION LOSS IN WEB AT BENT 1 BEHIND BEARING STIFFENER, 8" X 8" WITH UP TO 100% SECTION LOSS FOR 4" X 1/4", PAR	
3314	Maintain Steel Superstructure Components	LF	4	Span 1 Beam 10: CORROSION ON BOTTOM FLANGE AND WEB AT BENT 1 WITH SECTION LOSS FOR 4 FT. SECTION LOSS IN WEB UP TO 100% WITH A HOLE, 2" WIDE X 1/2" HIGH UNDER BENT DIAPHRAGM. BOTTOM FLANGE HAS 11/16" SECTION REMAINING OVER 4 FT AT BENT 1 ACROSS FULL WIDTH OF FLANGE, PAR	
3314	Maintain Steel Superstructure Components	LF	2	Span 3 Beam 5: CORROSION ON BOTTOM FLANGE FOR 2 FT AT BENT 2 WITH SECTION LOSS, BOTTOM FLANGE HAS 3/8" SECTION REMAINING FOR FULL WIDTH OF BOTTOM FLANGE, PAR	
3314	Maintain Steel Superstructure Components	LF	1	Span 3 Beam 5: CORROSION ON NORTH AND SOUTH BEARING STIFFENER AT BENT 2 WITH 5/16" SECTION REMAINING FOR LOWER 1" ACROSS BOTH STIFFENERS, PAR	

Key

Priority Maintenance Item Critical Finding Item Priority Maintenance Level Not Determined

BRIDGE INSPECTOR'S RECOMMENDATION FOR MAINTENANCE REPAIRS

Bridge: 430243 County HAYWOOD Date:

These Repairs Should Be Made Within Twelve Months From Date Of This Inspection

MMS Code	Description of Function	Unit	Quantity	Remarks	Est. Cost
3348	Maintain Concrete Substructure Components	LF	9	Bent 1 Cap 1: SPALL, 9 FT X 15" X 1 FT ON EAST FACE OF CAP ON TOP UNDER GIRDER 1 WITH EXPOSED REBAR WITH UP TO 10% SECTION LOSS OF ONE MAIN REINFORCING BAR, PAR	
3348	Maintain Concrete Substructure Components	LF	9	Bent 1 Cap 1: SPALL, 9 FT X 15" X 1 FT ON WEST FACE OF CAP ON TOP UNDER GIRDER 1 WITH EXPOSED REBAR WITH UP TO 10% SECTION LOSS OF ONE MAIN REINFORCING BAR, PAR	
3348	Maintain Concrete Substructure Components	LF	1	Bent 1 Cap 1: UNSOUND PATCH ON SOUTH FACE, DELAMINATED FULL HEIGHT X FULL WIDTH WITH 1" CRACKING THROUGHOUT EXTENDING 18" ON WEST FACE AND 12" ON EAST FACE, PAR	
3348	Maintain Concrete Substructure Components	LF	6	Bent 2 Cap 1: SPALLED/DELAMINATED AREA, 6 FT X 18" X 1 FT ON EAST FACE OF CAP AT TOP WITH EXPOSED REBAR WITH UP TO 5% SECTION LOSS IN MAIN REINFORCEMENT, PAR	

Key

Priority Maintenance Item Critical Finding Item Priority Maintenance Level Not Determined

BRIDGE INSPECTOR'S RECOMMENDATION FOR PRIORITY MAINTENANCE REPAIRS

Bridge: 430243 County HAYWOOD

THE FOLLOWING MAINTENANCE ITEMS HAVE BEEN SUBMITTED IN CONJUNCTION WITH A PRIORITY MAINTENANCE REQUEST

MMS Code	MMS Description	Quantity
3314	Maintain Steel Superstructure Components	1 LF

Location:		
Bent/Span No.		
Priority Level	Status	
Priority Maintenance	Division Bridge Maintenance Notification	
Submitted Date:	Submitted By:	Assisted By:
02/04/2021	DAVID RAGAN	

Details

Span 1 Beam 10: CORROSION ON LEFT SIDE OF BOTTOM FLANGE AT END BENT 1 WITH SECTION LOSS, 6" LONG X FULL WIDTH OF FLANGE WITH 7/16" THICKNESS REMAINING, PAR

MMS Code	MMS Description	Quantity
3314	Maintain Steel Superstructure Components	5 LF

Location:		
Bent/Span No.		
Priority Level	Status	
Priority Maintenance	Division Bridge Maintenance Notification	
Submitted Date:	Submitted By:	Assisted By:
02/04/2021	DAVID RAGAN	

Details

Span 1 Beam 10: CORROSION ON OUTSIDE FACE OF WEB AT END BENT 1 FOR 30" LONG X 12" HIGH THEN 24" LONG X 6" HIGH WITH SECTION LOSS UP TO 5/16" SECTION REMAINING IN WEB, PAR

BRIDGE INSPECTOR'S RECOMMENDATION FOR PRIORITY MAINTENANCE REPAIRS

Bridge: 430243 County HAYWOOD

THE FOLLOWING MAINTENANCE ITEMS HAVE BEEN SUBMITTED IN CONJUNCTION WITH A PRIORITY MAINTENANCE REQUEST

MMS Code	MMS Description	Quantity
3314	Maintain Steel Superstructure Components	8 LF

Location:
Bent/Span No.

Priority Level	Status
Priority Maintenance	Division Bridge Maintenance Notification

Submitted Date:	Submitted By:	Assisted By:
02/04/2021	DAVID RAGAN	

Details
Span 1 Beam 1: CORROSION ON BOTTOM FLANGE, LOWER 4" OF WEB AND BEARING STIFFENER AT BENT 1 IN BAY 1 FOR 8 FT WITH SECTION LOSS. BOTTOM FLANGE HAS 7/16" SECTION REMAINING ACROSS FULL WIDTH OF FLANGE. WEB HAS 7/16" SECTION REMAINING FOR 5 FT. BEARING STIFFENER HAS 3/16" SECTION REMAINING ACROSS FULL BEARING AND UP 2.5", PAR

MMS Code	MMS Description	Quantity
3314	Maintain Steel Superstructure Components	1 LF

Location:
Bent/Span No.

Priority Level	Status
Priority Maintenance	Division Bridge Maintenance Notification

Submitted Date:	Submitted By:	Assisted By:
02/04/2021	DAVID RAGAN	

Details
Span 1 Beam 10: CORROSION WITH SECTION LOSS IN WEB AT BENT 1 BEHIND BEARING STIFFENER, 8" X 8" WITH UP TO 100% SECTION LOSS FOR 4" X 1/4", PAR

BRIDGE INSPECTOR'S RECOMMENDATION FOR PRIORITY MAINTENANCE REPAIRS

Bridge: 430243 County HAYWOOD

THE FOLLOWING MAINTENANCE ITEMS HAVE BEEN SUBMITTED IN CONJUNCTION WITH A PRIORITY MAINTENANCE REQUEST

MMS Code	MMS Description	Quantity
3314	Maintain Steel Superstructure Components	4 LF

Location:		
Bent/Span No.		
Priority Level	Status	
Priority Maintenance	Division Bridge Maintenance Notification	
Submitted Date:	Submitted By:	Assisted By:
02/04/2021	DAVID RAGAN	

Details

Span 1 Beam 10: CORROSION ON BOTTOM FLANGE AND WEB AT BENT 1 WITH SECTION LOSS FOR 4 FT. SECTION LOSS IN WEB UP TO 100% WITH A HOLE, 2" WIDE X 1/2" HIGH UNDER BENT DIAPHRAGM. BOTTOM FLANGE HAS 11/16" SECTION REMAINING OVER 4 FT AT BENT 1 ACROSS FULL WIDTH OF FLANGE, PAR

MMS Code	MMS Description	Quantity
3314	Maintain Steel Superstructure Components	2 LF

Location:		
Bent/Span No.		
Priority Level	Status	
Priority Maintenance	Division Bridge Maintenance Notification	
Submitted Date:	Submitted By:	Assisted By:
02/04/2021	DAVID RAGAN	

Details

Span 3 Beam 5: CORROSION ON BOTTOM FLANGE FOR 2 FT AT BENT 2 WITH SECTION LOSS, BOTTOM FLANGE HAS 3/8" SECTION REMAINING FOR FULL WIDTH OF BOTTOM FLANGE, PAR

BRIDGE INSPECTOR'S RECOMMENDATION FOR PRIORITY MAINTENANCE REPAIRS

Bridge: 430243 County HAYWOOD

THE FOLLOWING MAINTENANCE ITEMS HAVE BEEN SUBMITTED IN CONJUNCTION WITH A PRIORITY MAINTENANCE REQUEST

MMS Code	MMS Description	Quantity
3314	Maintain Steel Superstructure Components	1 LF

Location:		
Bent/Span No.		
Priority Level	Status	
Priority Maintenance	Division Bridge Maintenance Notification	
Submitted Date:	Submitted By:	Assisted By:
02/04/2021	DAVID RAGAN	

Details

Span 3 Beam 5: CORROSION ON NORTH AND SOUTH BEARING STIFFENER AT BENT 2 WITH 5/16" SECTION REMAINING FOR LOWER 1" ACROSS BOTH STIFFENERS, PAR

MMS Code	MMS Description	Quantity
3348	Maintain Concrete Substructure Components	9 LF

Location:		
Bent/Span No.		
Priority Level	Status	
Priority Maintenance	Division Bridge Maintenance Notification	
Submitted Date:	Submitted By:	Assisted By:
02/04/2021	DAVID RAGAN	

Details

Bent 1 Cap 1: SPALL, 9 FT X 15" X 1 FT ON EAST FACE OF CAP ON TOP UNDER GIRDER 1 WITH EXPOSED REBAR WITH UP TO 10% SECTION LOSS OF ONE MAIN REINFORCING BAR, PAR

BRIDGE INSPECTOR'S RECOMMENDATION FOR PRIORITY MAINTENANCE REPAIRS

Bridge: 430243 County HAYWOOD

THE FOLLOWING MAINTENANCE ITEMS HAVE BEEN SUBMITTED IN CONJUNCTION WITH A PRIORITY MAINTENANCE REQUEST

MMS Code	MMS Description	Quantity
3348	Maintain Concrete Substructure Components	9 LF

Location:		
Bent/Span No.		
Priority Level	Status	
Priority Maintenance	Division Bridge Maintenance Notification	
Submitted Date:	Submitted By:	Assisted By:
02/04/2021	DAVID RAGAN	

Details

Bent 1 Cap 1: SPALL, 9 FT X 15" X 1 FT ON WEST FACE OF CAP ON TOP UNDER GIRDER 1 WITH EXPOSED REBAR WITH UP TO 10% SECTION LOSS OF ONE MAIN REINFORCING BAR, PAR

MMS Code	MMS Description	Quantity
3348	Maintain Concrete Substructure Components	1 LF

Location:		
Bent/Span No.		
Priority Level	Status	
Priority Maintenance	Division Bridge Maintenance Notification	
Submitted Date:	Submitted By:	Assisted By:
02/04/2021	DAVID RAGAN	

Details

Bent 1 Cap 1: UNSOUND PATCH ON SOUTH FACE, DELAMINATED FULL HEIGHT X FULL WIDTH WITH 1" CRACKING THROUGHOUT EXTENDING 18" ON WEST FACE AND 12" ON EAST FACE, PAR

BRIDGE INSPECTOR'S RECOMMENDATION FOR PRIORITY MAINTENANCE REPAIRS

Bridge: 430243 County HAYWOOD

THE FOLLOWING MAINTENANCE ITEMS HAVE BEEN SUBMITTED IN CONJUNCTION WITH A PRIORITY MAINTENANCE REQUEST

MMS Code	MMS Description	Quantity
3348	Maintain Concrete Substructure Components	6 LF

Location:
Bent/Span No.

Priority Level	Status
Priority Maintenance	Division Bridge Maintenance Notification

Submitted Date:	Submitted By:	Assisted By:
02/04/2021	DAVID RAGAN	

Details
Bent 2 Cap 1: SPALLED/DELAMINATED AREA, 6 FT X 18" X 1 FT ON EAST FACE OF CAP AT TOP WITH EXPOSED REBAR WITH UP TO 5% SECTION LOSS IN MAIN REINFORCEMENT, PAR

Bridge Inspection Field Sketch

Deck Width/Out to Out	71.417ft	Between Rails	68.000ft
Clear Roadway	66.000ft	Wearing Surface	0.083ft
Median Width	2.000ft	Median Height	2.833ft

Curb Height	Left	0.541ft	Right	0.541ft
Sidewalk Width	Left		Right	
Clear Roadway (Rail to Median)	Left	33.000ft	Right	33.000ft
Guardrail Width	Left	2.625ft	Right	2.625ft
Top of Rail to Deck/Wearing Surface	Left	2.500ft	Right	2.500ft
Bridge Rail	Left	Type 33	Right	Type 33

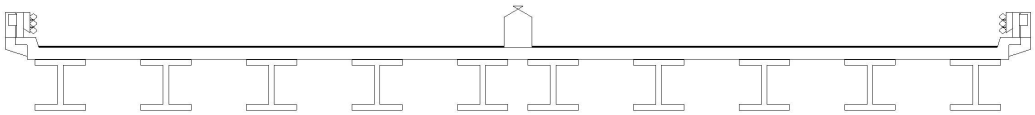

Measurements for Span #	1	ALL SPANS SIMILAR	
Deck Thickness	0.854	Left Overhang	3.208
Top of Rail to Bottom of Beam	6.187	Right Overhang	3.208

Beam Number	Beam Type	Spacing	Comments
1	Steel I Beam	7.500ft	
2	Steel I Beam	7.500ft	
3	Steel I Beam	7.500ft	
4	Steel I Beam	7.500ft	
5	Steel I Beam	5.000ft	
6	Steel I Beam	7.500ft	
7	Steel I Beam	7.500ft	
8	Steel I Beam	7.500ft	
9	Steel I Beam	7.500ft	
10	Steel I Beam	ft	

BEAMS

(NON-TAPERED FLANGES)

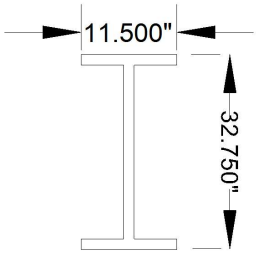

FLANGES = 11/16"
WEB = 1/2"

VERIFIED ON 2-12-21 BY ALS

Title	Description
Typical Section	Data Worksheet

Bridge No:	Drawn By:	Date:	File Name:
430243	Roy W. Shook	07/27/2005	S0106000214

Bridge Inspection Field Sketch

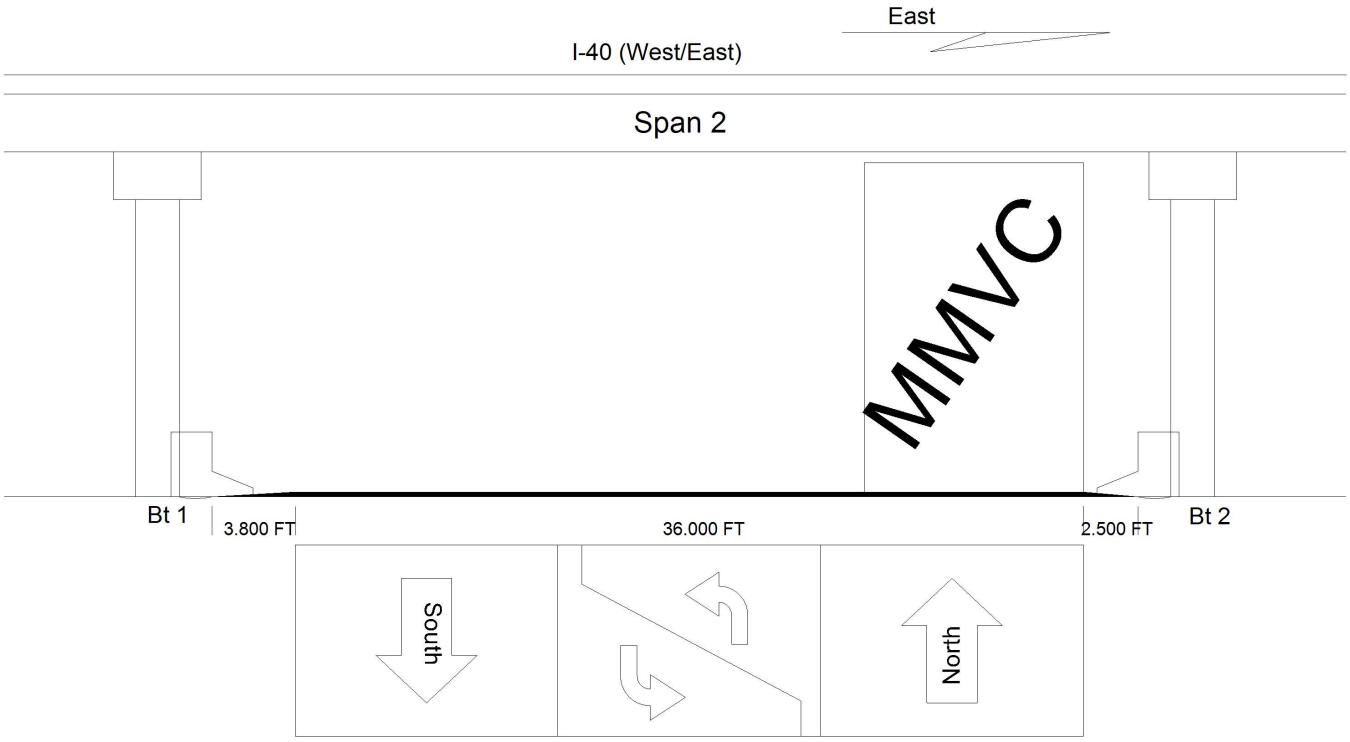

Roadway 1		Direction of Traffic	North South
Distance to Left Rail	3.800FT	Distance to Right Rail	2.500FT
Distance to Left Toe of Slope		Distance to Left Bent	5.300FT
Distance to Right Toe of Slope		Distance to Right Bent	4.000FT
MMVC	16.291 Ft at Beam 10, 10.000 FT from Right Edge of Roadway		
MVC	15.083 Ft at Beam 10, 0.100 FT from Left Edge of Roadway		

MODIFIED 2-12-21 BY ALS

Title	Description
Underclearance	Data Worksheet

Bridge No: 430243	Drawn By: Roy W. Shook	Date: 07/27/2005	File Name: S0106000215

Bridge Inspection Field Sketch

EAST APPROACH HAS GUARDRAIL AT BOTH CORNERS

MEASUREMENTS TAKEN 25.000 FT FROM END BENT 1

Left Lanes			
Roadway	24.000ft Wide	2 Paved Lanes	West Bound
Right Shoulder	6.500ft Wide	6.500ft Paved	
Left Shoulder	6.000ft Wide	6.000ft Paved	
Right Guardrail			
Left Guardrail			
Median	2.000ft Wide	2.800ft High	
Right Lanes			
Roadway	24.000ft Wide	2 Paved Lanes	East Bound
Left Shoulder	5.900ft Wide	5.900ft Paved	
Right Shoulder	2.200ft Wide	2.200ft Paved	
Left Guardrail	5.900ft from road		
Right Guardrail	2.200ft from road		

VERIFIED ON 2-12-21 BY ALS

Title	Description
Approach Roadway	Data Worksheet

Bridge No:	Drawn By:	Date:	File Name:
430243	DH/RS	07/27/2005	S0106000213

Bridge Inspection Field Sketch

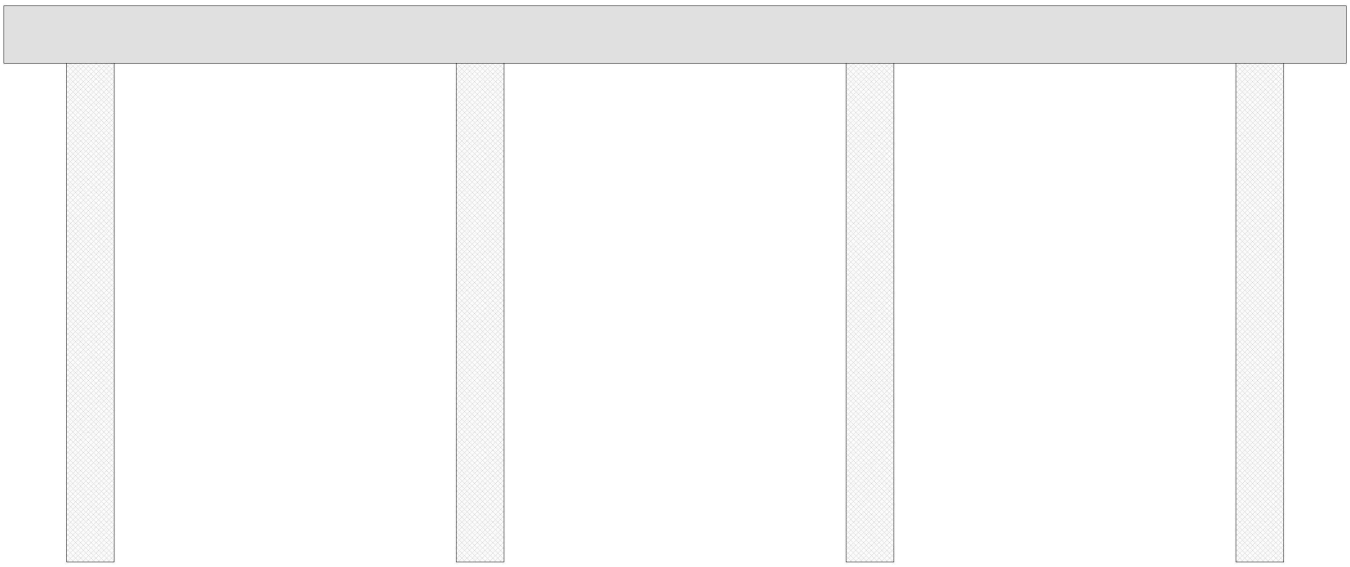

Cap Information			Material Cast-in-Place Concrete			
Length	Width	Height	Left Overhang	Right Overhang	Left Beam to End of Cap.	Right Beam to End of Cap.
70.000 ft.	3.000 ft.	3.000 ft.	4.500 ft.	4.500 ft.	1.833 ft.	1.833 ft.

Subcap Information			Material		
Length	Width	Height	Left Overhang	Right Overhang	Left Pile to Splice.

Sill Information			Material
Length	Width	Height	

Pile #	Material	Spacing	Width/Dia.	Height	Length	Orientation	Driven?	Replacement?	Removed?	Collar?
1	Concrete	20.333 ft.	2.500 ft.	3.000 ft.		Vertical	No	No	No	No
2	Concrete	20.333 ft.	2.500 ft.	3.000 ft.		Vertical	No	No	No	No
3	Concrete	20.333 ft.	2.500 ft.	3.000 ft.		Vertical	No	No	No	No
4	Concrete		2.500 ft.	3.000 ft.		Vertical	No	No	No	No

Bent/Abutment #: 1 Similar Bents: 2

Title VERIFIED 2-12-21 BY ALS
INTERIOR BENTS

Description
SUBSTRUCTURE DETAILS

Bridge No: 430243 **Drawn By:** JOE C. HUNTSINGER **Date:** 4/17/2013 **File Name:** S0106001607

Bridge Inspection Field Sketch

DIAPHRAGM DETAILS

LOCATIONS : MIDPOINTS OF SPANS

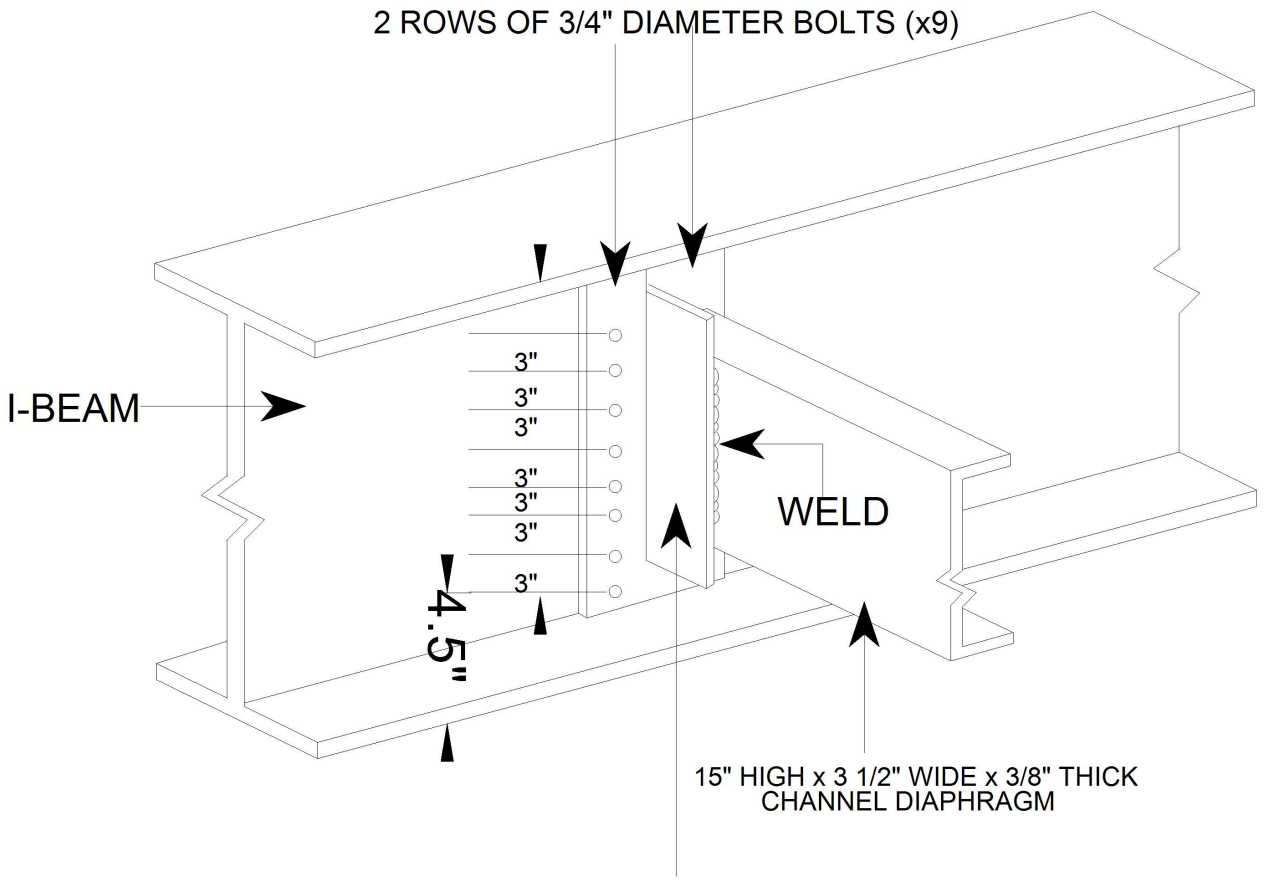

VERIFIED 2-12-21 BY ALS

Title	Description
INTERMEDIATE DIAPHRAGMS	SUPERSTRUCTURE DETAILS

Bridge No:	Drawn By:	Date:	File Name:
430243	JOE C. HUNTSINGER	4/17/2013	S0106001608