NC DEPARTMENT OF TRANSPORTATION
DIVISION OF HIGHWAYS
STRUCTURE MANAGEMENT UNIT

ATTENTION: PRIORITY ACTION REQUEST;

Structure Safety Report

Routine Element Inspection - Contract

INSPECTION DATE: 02/12/2021

DIVISION: 14 **COUNTY:** HAYWOOD **STRUCTURE NUMBER:** 430248 **FREQUENCY:** 24 MONTHS

FACILITY CARRIED: I-40 EBL **MILE POST:** 32.4

LOCATION: 1.1 MI.E.JCT.NC215

FEATURE INTERSECTED: SR1613

LATITUDE: 35° 33' 20.53" **LONGITUDE:** 82° 49' 50.99"

SUPERSTRUCTURE:

SUBSTRUCTURE:

SPANS: 3 SPANS. SEE SPAN PROFILE SHEET FOR SPAN DETAILS

☐ FRACTURE CRITICAL ☐ TEMPORARY SHORING ☐ SCOUR CRITICAL ☐ SCOUR PLAN OF ACTION

GRADES: (Inspector/NBI Coding) **DECK** 6 / 6 **SUPERSTRUCTURE** 6 / 6 **SUBSTRUCTURE** 6 / 6 **CULVERT** N / N

POSTED SV: Not Posted **POSTED TTST:** Not Posted

OTHER SIGNS PRESENT: NONE

LOOKING EAST

Sign noticed issued for		Number Required
NO	**WEIGHT LIMIT**	0
NO	**DELINEATORS**	0
NO	**NARROW BRIDGE**	0
NO	**ONE LANE BRIDGE**	0
NO	**LOW CLEARANCE**	0

DIRECTION OF INSPECTION W-E

DIRECTION MATCHES PLANS

INSPECTED BY	SIGNATURE	ASSISTED BY
JEREMY KEENE		MAYUR SHARMA

NATIONAL BRIDGE INVENTROY ----- STRUCTURE INVENTORY AND APPRAISAL

03/25/2021

IDENTIFICATION

(1) STATE NAME NORTH CAROLINA BRIDGE **430248**
(8) STRUCTURE NUMBER (FEDERAL) **0870248**
(5) INVENTORY ROUTE (ON/UNDER) ON **111000400**
(2) STATE HIGHWAY DEPARTMENT DISTRICT **14**
(3) COUNTY CODE (FEDERAL) **87** (4) PLACE CODE **10240**
(6) FEATURE INTERSECTED **SR1613**
(7) FACILITY CARRIED **I-40 EBL**
(9) LOCATION **1.1 MI.E.JCT.NC215**
(11) MILEPOINT **32.4**
(12) BASE HIGHWAY NETWORK **1**
(13) LRS INVENTORY ROUTE & SUBROUTE **10040**
(16) LATITUDE **35° 33' 20.53"** (17) LONGITUDE **82° 49' 50.99"**
(98) BORDER BRIDGE STATE CODE PERCENT SHARED
(99) BORDER BRIDGE STRUCTURE NUMBER

STRUCTURE TYPE AND MATERIAL

(43) STRUCTURE TYPE MAIN **Steel**
TYPE **Stringer/Multi-beam or girder** CODE **302**
(44) STRUCTURE TYPE APPROACH
TYPE CODE
(45) NUMBER OF SPANS IN MAIN UNIT **3**
(46) NUMBER OF SPANS IN APPROACH **0**
(107) DECK STRUCTURE TYPE CODE **1**
(108)WEARING SURFACE/PROTECTIVE SYSTEM
(A) TYPE OF WEARING SURFACE CODE **3**
(B) TYPE OF MEMBRANE CODE **0**
(C) TYPE OF DECK PROTECTION CODE **0**

AGE AND SERVICE

(27) YEAR BUILT **1961**
(106) YEAR RECONSTRUCTED **2011**
(42) TYPE OF SERVICE ON - **Highway**
OFF - **Highway** CODE **11**
(28) LANES ON STRUCTURE **2** LANES UNDER STRUCTURE **2**
(29) AVERAGE DAILY TRAFFIC **28000**
(30) YEAR OF ADT **2019** (109) TRUCK ADT PCT **16**
(19) BYPASS OR DETOUR LENGTH **1.0**

GEOMETRIC DATA

(48) LENGTH OF MAXIMUM SPAN **60.0**
(49) STRUCTURE LENGTH **174.0**
(50) CURB OR SIDEWALK: LEFT **0.0** RIGHT **0.0**
(51) BRIDGE ROADWAY WIDTH, CURB TO CURB **28.0**
(52) DECK WIDTH OUT TO OUT **31.4**
(32) APPROACH ROADWAY WITH (W/ SHOULDERS) **41.0**
(33) BRIDGE MEDIAN **Open median** CODE **1**
(34) SKEW **30** (35) STRUCTURE FLARED **0**
(10) INVENTORY ROUTE MIN VERT CLEAR **999.9**
(47) INVENTORY ROUTE TOTAL HORIZ CLEAR **28.0**
(53) MIN VERT CLEAR OVER BRIDGE RDWY **999.9**
(54) MIN VERT UNDERCLEAR: REFERENCE **H** **14.8**
(55) MIN LAT UNDERCLEARANCE RT: REFERENCE **H** **12.2**
(56) MIN LAT UNDERCLEARANCE LT: **0.0**

NAVIGATION DATA

(38) NAVIGATION CONTROL - CODE **N**
(111) PIER PROTECTION CODE
(39) NAVIGATION VERTICAL CLEARANCE **0.0**
(116) VERT - LIFT BRIDGE NAV MIN VERT CLEAR **0.0**
(40) NAVIGATION HORIZONTAL CLEARANCE **0.0**

SUFFICIENCY RATING **76.30**
STATUS = **Functionally Obsolete**

CLASSIFICATION		CODE
(112) NBIS BRIDGE SYSTEM		**YES**
(104) HIGHWAY SYSTEM	**Inventory Route is on NHS**	**1**
(26) FUNCTIONAL CLASS	**Urban Principal Arterial - Interstate**	**11**
(100) STRAHNET HIGHWAY	**Interstate STRAHNET Route**	**1**
(101) PARALLEL STRUCTURE	**The right structure of parallel bridges**	**R**
(102) DIRECTION OF TRAFFIC	**1-way traffic**	**1**
(103) TEMPORARY STRUCTURE		
(110) DESIGNATED NATIONAL NETWORK -	**on natiional network for trucks**	**1**
(20) TOLL	**On Free Road**	**3**
(21) MAINT -		**01**
(22) OWNER -		**01**
(37) HISTORICAL SIGNIFICANCE -		**5**

CONDITION	CODE
(58) DECK	**6**
(59) SUPERSTRUCTURE	**6**
(60) SUBSTRUCTURE	**6**
(61) CHANNEL & CHANNEL PROTECTION	**N**
(62) CULVERTS	**N**

LOAD RATING AND POSTING		CODE
(31) DESIGN LOAD	**H 20 + Mod**	**6**
(63) OPERATING RATING METHOD -	**Load Factor**	**1**
(64) OPERATING RATING -	**HS-51**	**91**
(65) INVENTORY RATING METHOD -		**1**
(66) INVENTORY RATING	**HS-30**	**54**
(70) BRIDGE POSTING	**No Posting Required**	**5**
(41) STRUCTURE OPEN, POSTED, OR CLOSED		**A**
DESCRIPTION	**Open, no restriction**	

APPRAISAL	CODE
(67) STRUCTURAL EVALUATION	**6**
(68) DECK GEOMETRY	**2**
(69) UNDERCLEARANCES, VERT & HORIZ	**6**
(71) WATERWAY ADEQUACY	**6**
(72) APPROACH ROADWAY ALIGNMENT	**2**
(36) TRAFFIC SAFETY FEATURES	**1111**
(113) SCOUR CRITICAL BRIDGES	**N**

PROPOSED IMPROVEMENTS

(75) TYPE OF WORK CODE
(76) LENGTH OF STRUCTURE IMPROVEMENT
(94) BRIDGE IMPROVEMENT COST
(95) ROADWAY IMPROVEMENT COST
(96) TOTAL PROJECT COST
(97) YEAR OF IMPROVEMENT COST ESTIMATE
(114) FUTURE ADT **56,000** YEAR OF FUTURE ADT **2040**

INSPECTION

(90) INSPECTION DATE **02/21** (91) FREQUENCY **24**
(92) CRITICAL FEATURE INSPECTION (93) CFI DATE
A) FRACTURE CRIT DETAIL A)
B) UNDERWATER INSP B)
C) OTHER SPECIAL INSP C)
SCOUR

Structure Number **430248** County **HAYWOOD** Run Date **03/25/2021**

Span Number	Facility Carried	Inventory Route	Maximum Minimum Vertical Clearance	Milepoint	Base Highway	LRS Inventory Route	Functional Classification	Number of Lanes	Average Daily Traffic	Year of Average Daily Traffic	Total Horizontal Clearance	*See Note Below*					STRAHNET Highway	Direction of Traffic	National Highway System	National Truck Network
												Reference Feature	Minimum Vertical Underclearance	Rigth Lateral Underclearance	Left Lateral Underclearance	Underclearance Appraisal Grade				
	7	5	10	11	12	13	26	28	29	30	47	54A	54	55	56	69	100	102	104	110
2	SR 1613	31016130	15.5	0.0	0		19	2	2600	2016	49.7	H	14.8	12.5	12.2	6		2	☐	☐
2	SR 1613	31016130	15.5		0		19	2	2600	2016	49.7	H	14.8	12.2		6	0	2	☐	☐

Note: Items 54, 55, and 56 are not reported FHWA under route data points but are collected for each under route to determine the minimum value for Underclearance Appraisal Item 69.

Superstructure Build Details

Span Number 1 **Span Length** 52.0940 **Skew** 62.0000

Number of Items	Type of Component	Element Name	Quantity		Protective System Applied	Quantity (Sq Ft)
1	Concrete Wearing Surface	Wearing Surface	1459	Square Feet		
4	Fixed Bearing	Fixed Bearing	4	Each	Legacy Red Lead Primer Systems with Various Topcoats	4
1	Compression Seal	Compression Joint Seal	36	Feet		
2	Concrete and Metal Railing	Other Bridge Railing	106	Feet	Unknown	106
4	Movable Bearing	Movable Bearing	4	Each	Legacy Red Lead Primer Systems with Various Topcoats	4
1	Reinforced Concrete Deck	Reinforced Concrete Deck	1637	Square Feet		
4	Plate Girder	Steel Open Girder/Beam	208	Feet	Legacy Red Lead Primer Systems with Various Topcoats	1896

Span Number 2 **Span Length** 60.5050 **Skew** 60.1570

Number of Items	Type of Component	Element Name	Quantity		Protective System Applied	Quantity (Sq Ft)
1	Compression Seal	Compression Joint Seal	36	Feet		
1	Concrete Wearing Surface	Wearing Surface	1695	Square Feet		
4	Plate Girder	Steel Open Girder/Beam	244	Feet	Legacy Red Lead Primer Systems with Various Topcoats	2220
2	Concrete and Metal Railing	Other Bridge Railing	122	Feet	Unknown	122
1	Reinforced Concrete Deck	Reinforced Concrete Deck	1902	Square Feet		
4	Fixed Bearing	Fixed Bearing	4	Each	Legacy Red Lead Primer Systems with Various Topcoats	4
4	Movable Bearing	Movable Bearing	4	Each	Legacy Non Lead Primer System with various Topcoats	4

Span Number 3 **Span Length** 61.0470 **Skew** 60.2500

Number of Items	Type of Component	Element Name	Quantity		Protective System Applied	Quantity (Sq Ft)
4	Movable Bearing	Movable Bearing	4	Each	Legacy Red Lead Primer Systems with Various Topcoats	4
2	Concrete and Metal Railing	Other Bridge Railing	124	Feet	Unknown	124
4	Plate Girder	Steel Open Girder/Beam	244	Feet	Legacy Red Lead Primer Systems with Various Topcoats	2224

Superstructure Build Details

2	Compression Seal	Compression Joint Seal	72	Feet		
4	Fixed Bearing	Fixed Bearing	4	Each	Legacy Red Lead Primer Systems with Various Topcoats	4
1	Concrete Wearing Surface	Wearing Surface	1710	Square Feet		
1	Reinforced Concrete Deck	Reinforced Concrete Deck	1919	Square Feet		

Structure Element Scoring

Structure Number: **430248**

Inspection Date **2/12/2021**

Element Number	Parent Number	Element Name	Location	Total Quantity	Level 1 Quantity	Level 2 Quantity	Level 3 Quantity	Level 4 Quantity
12	0	Reinforced Concrete Deck	Deck	5458	0	4053	1405	0
107	0	Steel Open Girder/Beam	Beam	696	75	621	0	0
515	107	Steel Protective Coating	Beam	6340	5470	61	809	0
205	0	Reinforced Concrete Column	Piles and Columns	4	2	2	0	0
215	0	Reinforced Concrete Abutment	Abutments	84	81	0	3	0
220	0	Reinforced Concrete Pile Cap/Footing	Footing	22	22	0	0	0
225	0	Steel Pile	Piles and Columns	12	12	0	0	0
234	0	Reinforced Concrete Pier Cap	Caps	137	71	60	6	0
302	0	Compression Joint Seal	Expansion Joints	144	137	2	5	0
311	0	Movable Bearing	Bearing Device	12	0	3	9	0
515	311	Steel Protective Coating	Bearing Device	12	0	0	5	7
313	0	Fixed Bearing	Bearing Device	12	0	8	4	0
515	313	Steel Protective Coating	Bearing Device	12	1	0	10	1
321	0	Reinforced Concrete Approach Slabs	Approaches	560	281	96	183	0
333	0	Other Bridge Railing	Bridge Rail	352	170	176	6	0
515	333	Steel Protective Coating	Bridge Rail	352	352	0	0	0
510	0	Wearing Surface	Wearing Surfaces	4864	4384	480	0	0

Summary of Maintenance Needs

Maintenance By Defect

Structure Number: **430248** Inspection Date: **02/12/2021**

MMS Code	Element Name	Defect Name	Recommended Quantity
3326	Reinforced Concrete Deck	Cracking (RC and Other)	1400 Square Feet
3326	Reinforced Concrete Deck	Delamination/Spall	5 Square Feet
3314	Steel Open Girder/Beam	Damage	1 Feet
3350	Reinforced Concrete Abutment	Cracking (RC and Other)	1 Feet
3350	Reinforced Concrete Abutment	Delamination/Spall	2 Feet
3348	Reinforced Concrete Pier Cap	Exposed Rebar	1 Feet
3348	Reinforced Concrete Pier Cap	Patched Area	6 Feet
3348	Reinforced Concrete Pier Cap	Delamination/Spall	6 Feet
3310	Compression Joint Seal	Adjacent Deck or Header	3 Feet
3334	Movable Bearing	Corrosion	9 Each
3334	Fixed Bearing	Corrosion	4 Each
3353	Reinforced Concrete Approach Slabs	Cracking (RC and Other)	171 Square Feet
3353	Reinforced Concrete Approach Slabs	Delamination/Spall	12 Square Feet
3318	Other Bridge Railing	Damage	123 Feet
3318	Other Bridge Railing	Delamination/Spall	6 Feet
3342	Steel Protective Coating	Peeling/Bubbling/Cracking (steel Protective Coatings)	200 Square Feet
3342	Steel Protective Coating	Effectiveness (Steel Protective Coatings)	694 Square Feet

Element Structure Maintenance Quantities

Structure Number: **430248** Inspection Date **02/12/2021**

Location	MMS Code	Description	Maint Quantity	Total Quantity	Severe Quantity	Poor Quantity	Fair Quantity	Good Quantity
Abutments	3350	Maintenance of Concrete Wings and Wall	3	84	0	3	0	81
Approaches	3353	Maintenance of Concrete Bridge Approach Slabs	183	560	0	183	96	281
Beam	3314	Maintenance Steel Superstructure Components	1	696	0	0	621	75
Beam	3342	Clean and Paint Steel	870	6340	0	809	61	5470
Bearing Device	3334	Bridge Bearing	13	24	0	13	11	0
Bearing Device	3342	Clean and Paint Steel	23	24	8	15	0	1
Bridge Rail	3318	Maintenance of Concrete Bridge Rail	129	352	0	6	176	170
Bridge Rail	3342	Clean and Paint Steel	0	352	0	0	0	352
Caps	3348	Maintenance of Concrete Substructure	13	137	0	6	60	71
Deck	3326	Maintenance of Concrete Deck	1405	5458	0	1405	4053	0
Expansion Joints	3310	Maintenance of Standard Bridge Expansion Joints	3	144	0	5	2	137
Footing	3348	Maintenance of Concrete Substructure	0	22	0	0	0	22
Piles and Columns	3348	Maintenance of Concrete Substructure	0	4	0	0	2	2
Piles and Columns	3354	Maintenance of Steel Substructure Components	0	12	0	0	0	12
Wearing Surfaces	2816	Asphalt Surface Repair	0	4864	0	0	480	4384

Priority Actions Request

Structure Number **430248**

Wingwalls

3350 **Wingwalls** Wingwalls

Priority Level	Defect Type	Quantity	Defect Description
1		2	SPALL IN SOUTHEAST WINGWALL, 15" x 8" x 5" WITH NO EXPOSED REBAR WITH BACKFILL SPILLING THROUGH, PAR

? Priority Action Request (PAR) 1 Assigned Routine Maintenance 2 Assigned Priority Maintenance 3 Assigned Critical Find

Element Condition and Maintenance Data

Structure Number: **430248** Inspection Date: **02/12/2021**

Span 1 Deck

Reinforced Concrete Deck

Element Number	Element Name	Total Qty	CS1 Qty	CS2 Qty	CS3 Qty	CS4 Qty	
12	Reinforced Concrete Deck	1,637	0	1,233	404	0	Square Feet

Element Number	Defect Type	Defect Description	CS	CS Qty	Maint Qty	
12	**Cracking (RC and Other)**	**LONGITUDINAL AND TRANSVERSE CRACKS UP TO 1/16" WIDE X UP TO FULL LENGTH AND FULL WIDTH SCATTERED THROUGHOUT SPAN ON TOP OF DECK**	3	400	400	Square Feet
12	**Delamination/Spall**	**TWO DELAMINATIONS, UP TO 2 FT X 1 FT IN UNDERSIDE OF RIGHT OVERHANG NEAR BENT 1**	3	4	4	Square Feet
12	**Abrasion/Wear (PSC/RC)**	**ABRASION AND WEAR THROUGHOUT TOP OF DECK, AGGREGATE IS SECURE**	2	1,022		Square Feet
12	**Cracking (RC and Other)**	**HAIRLINE MAP CRACKING WITH EFFLORESCENCE SCATTERED THROUGHOUT UNDERSIDE OF SPAN**	2			Square Feet
12	**Exposed Rebar**	**2 AREAS OF EXPOSED REBAR, 6" X 1" IN UNDERSIDE OF RIGHT OVERHANG NEAR END BENT 1, NO SECTION LOSS**	2	1		Square Feet
12	**Patched Areas**	**SOUND PATCHES UP TO 3.5FT WIDE X 4 FT LONG SCATTERED ALONG THE FULL LENGTH IN THE IN THE RIGHT LANE.**	2	210		Square Feet

General Comments

Span 1 Beam 1

Plate Girder

Element Number	Element Name	Total Qty	CS1 Qty	CS2 Qty	CS3 Qty	CS4 Qty	
107	Steel Open Girder/Beam	52	0	52	0	0	Feet
515	Steel Protective Coating	474	422	0	52	0	Square Feet

Element Number	Defect Type	Defect Description	CS	CS Qty	Maint Qty	
107	**Corrosion**	**CORROSION ON OUTSIDE OF BOTTOM FLANGE WITH FLAKING RUST, NO MEASUREABLE SECTION LOSS, FULL LENGTH OF GIRDER**	2	52		Feet
107	**Corrosion**	**CORROSION, NO MEASURABLE SECTION LOSS, IN THE BOTTOM FLANGE AND LOWER 6'' OF THE WEB BEHIND THE BEARING STIFFENER AT BENT 1 FOR 1 FT LONG.**	2			Feet
107	**Corrosion**	**FRECKLED RUST ON LOWER 8" OF WEB ON OUTSIDE FACE FOR FULL LENGTH OF GIRDER, NO MEASUREABLE SECTION LOSS**	2			Feet
515	**Effectiveness (Steel Protective Coatings)**	**LIMITED EFFECTIVENESS, WITH CORROSION COMING THROUGH COATING IN THE BOTTOM FLANGE AND WEB..**	3	52	52	Square Feet

General Comments

Span 1 Beam 2

Plate Girder

Element Number	Element Name	Total Qty	CS1 Qty	CS2 Qty	CS3 Qty	CS4 Qty	
107	Steel Open Girder/Beam	52	0	52	0	0	Feet
515	Steel Protective Coating	474	422	0	52	0	Square Feet

Element Number	Defect Type	Defect Description	CS	CS Qty	Maint Qty	
107	**Corrosion**	**SURFACE CORROSION ALONG THE BOTTOM FLANGE AND LOWER 2" OF THE WEB FOR THE FULL LENGTH, NO SECTION LOSS**	2	52		Feet

515	**Effectiveness (Steel Protective Coatings)**	**LIMITED EFFECTIVENESS WITH SURFACE CORROSION COMING THROUGH IN THE BOTTOM FLANGE AND WEB**	3	52	52	Square Feet

General Comments

Span 1 Beam 3

Plate Girder

Element Number	Element Name	Total Qty	CS1 Qty	CS2 Qty	CS3 Qty	CS4 Qty	
107	Steel Open Girder/Beam	52	26	26	0	0	Feet
515	Steel Protective Coating	474	448	0	26	0	Square Feet

Element Number	Defect Type	Defect Description	CS	CS Qty	Maint Qty	
107	**Corrosion**	**SURFACE CORROSION ON BOTTOM FLANGE SCATTERED THROUGHOUT SPAN, NO SECTION LOSS**	2	26		Feet
515	**Effectiveness (Steel Protective Coatings)**	**LIMITED EFFECTIVNESS WITH SURFACE CORROSION SCATTERED THROUGHOUT THE BOTTOM FLANGE**	3	26	26	Square Feet

General Comments

Span 1 Beam 4

Plate Girder

Element Number	Element Name	Total Qty	CS1 Qty	CS2 Qty	CS3 Qty	CS4 Qty	
107	Steel Open Girder/Beam	52	0	52	0	0	Feet
515	Steel Protective Coating	474	422	0	52	0	Square Feet

Element Number	Defect Type	Defect Description	CS	CS Qty	Maint Qty	
107	**Corrosion**	**SURFACE CORROSION ON BOTTOM FLANGE FOR FULL LENGTH OF SPAN, NO SECTION LOSS**	2	52		Feet
515	**Effectiveness (Steel Protective Coatings)**	**LIMITED EFFECTIVENESS WITH SURFACE CORROSION COMING THROUGH IN THE BOTTOM FLANGE**	3	52	52	Square Feet

General Comments

Span 1 Expansion Joint at End Bent 1

Compression Seal

Element Number	Element Name	Total Qty	CS1 Qty	CS2 Qty	CS3 Qty	CS4 Qty	
302	Compression Joint Seal	36	33	0	3	0	Feet

Element Number	Defect Type	Defect Description	CS	CS Qty	Maint Qty	
302	**Adjacent Deck or Header**	**SPAN 1 JOINT HEADERS ARE DELAMINATED FOR 3 FT LONG X FULL WIDTH WITH CRACKING UP TO 1" WIDE NEAR THE CENTERLINE.**	3	3	3	Feet

General Comments

Span 1 Left Bridge Rail

Concrete and Metal Railing

Element Number	Element Name	Total Qty	CS1 Qty	CS2 Qty	CS3 Qty	CS4 Qty	
333	Other Bridge Railing	53	0	53	0	0	Feet
515	Steel Protective Coating	53	53	0	0	0	Square Feet

Element Number	Defect Type	Defect Description	CS	CS Qty	Maint Qty

333	**Damage**	**THE LEFT RAIL HAS MINOR SCRAPE DAMAGE, WITH 2" X 2" TEARS IN THE STEEL FOR THE FULL LENGTH. GUARDRAIL CONTINUES TO FUNCTION.**	2	53	Feet

General Comments

Span 1 Near Bearing

Fixed Bearing

Element Number	Element Name	Total Qty	CS1 Qty	CS2 Qty	CS3 Qty	CS4 Qty	
313	Fixed Bearing	1	0	1	0	0	Each
515	Steel Protective Coating	1	0	0	1	0	Square Feet

Element Number	Defect Type	Defect Description	CS	CS Qty	Maint Qty	
313	**Corrosion**	**SURFACE CORROSION ON THE BEARING PLATES.**	2	1		Each
515	**Effectiveness (Steel Protective Coatings)**	**LOSS OF PAINT ALLOWING SURFACE CORROSION ON THE BEARING PLATES.**	3	1	1	Square Feet

General Comments

Span 1 Far Bearing

Movable Bearing

Element Number	Element Name	Total Qty	CS1 Qty	CS2 Qty	CS3 Qty	CS4 Qty	
311	Movable Bearing	1	0	1	0	0	Each
515	Steel Protective Coating	1	0	0	1	0	Square Feet

Element Number	Defect Type	Defect Description	CS	CS Qty	Maint Qty	
311	**Corrosion**	**SURFACE CORROSION ON THE BEARING PLATES.**	2	1		Each
515	**Effectiveness (Steel Protective Coatings)**	**LOSS OF PAINT ALLOWING SURFACE CORROSION ON THE BEARING PLATES.**	3	1	1	Square Feet

General Comments

Span 1 Near Bearing

Fixed Bearing

Element Number	Element Name	Total Qty	CS1 Qty	CS2 Qty	CS3 Qty	CS4 Qty	
313	Fixed Bearing	1	0	1	0	0	Each
515	Steel Protective Coating	1	0	0	1	0	Square Feet

Element Number	Defect Type	Defect Description	CS	CS Qty	Maint Qty	
313	**Corrosion**	**SURFACE CORROSION ON THE BEARING PLATES.**	2	1		Each
515	**Effectiveness (Steel Protective Coatings)**	**LOSS OF PAINT ALLOWING SURFACE CORROSION ON THE BEARING PLATES.**	3	1	1	Square Feet

General Comments

Span 1 Far Bearing

Movable Bearing

Element Number	Element Name	Total Qty	CS1 Qty	CS2 Qty	CS3 Qty	CS4 Qty	
311	Movable Bearing	1	0	1	0	0	Each
515	Steel Protective Coating	1	0	0	1	0	Square Feet

Element Number	Defect Type	Defect Description	CS	CS Qty	Maint Qty	
311	**Corrosion**	**SURFACE CORROSION ON THE BEARING PLATES.**	2	1		Each
515	**Effectiveness (Steel Protective Coatings)**	**LOSS OF PAINT ALLOWING SURFACE CORROSION ON THE BEARING PLATES.**	3	1	1	Square Feet

General Comments

Span 1 Near Bearing

Fixed Bearing

Element Number	Element Name	Total Qty	CS1 Qty	CS2 Qty	CS3 Qty	CS4 Qty	
313	Fixed Bearing	1	0	1	0	0	Each
515	Steel Protective Coating	1	0	0	1	0	Square Feet

Element Number	Defect Type	Defect Description	CS	CS Qty	Maint Qty	
313	**Corrosion**	**SURFACE CORROSION ON THE BEARING PLATES.**	2	1		Each
515	**Effectiveness (Steel Protective Coatings)**	**LOSS OF PAINT ALLOWING SURFACE CORROSION ON THE BEARING PLATES.**	3	1	1	Square Feet

General Comments

Span 1 Far Bearing

Movable Bearing

Element Number	Element Name	Total Qty	CS1 Qty	CS2 Qty	CS3 Qty	CS4 Qty	
311	Movable Bearing	1	0	1	0	0	Each
515	Steel Protective Coating	1	0	0	1	0	Square Feet

Element Number	Defect Type	Defect Description	CS	CS Qty	Maint Qty	
311	**Corrosion**	**SURFACE CORROSION ON THE BEARING PLATES.**	2	1		Each
515	**Effectiveness (Steel Protective Coatings)**	**LOSS OF PAINT ALLOWING SURFACE CORROSION ON THE BEARING PLATES.**	3	1	1	Square Feet

General Comments

Span 1 Near Bearing

Fixed Bearing

Element Number	Element Name	Total Qty	CS1 Qty	CS2 Qty	CS3 Qty	CS4 Qty	
313	Fixed Bearing	1	0	0	1	0	Each
515	Steel Protective Coating	1	1	0	0	0	Square Feet

Element Number	Defect Type	Defect Description	CS	CS Qty	Maint Qty	
313	**Corrosion**	**CORROSION WITH PACK RUST, NO MEASURABLE SECTION LOSS, ON THE BEARING PLATES.**	3	1	1	Each
515	**Effectiveness (Steel Protective Coatings)**	**COATING HAS FAILED.**	4	1	1	Square Feet

General Comments

Span 1 — Far Bearing

Movable Bearing

Element Number	Element Name	Total Qty	CS1 Qty	CS2 Qty	CS3 Qty	CS4 Qty	
311	Movable Bearing	1	0	0	1	0	Each
515	Steel Protective Coating	1	0	0	1	0	Square Feet

Element Number	Defect Type	Defect Description	CS	CS Qty	Maint Qty	
311	**Corrosion**	**CORROSION WITH PACK RUST, NO MEAURABLE SECTION LOSS, ON THE BEARING PLATES.**	3	1	1	Each
515	**Effectiveness (Steel Protective Coatings)**	**COATING HAS FAILED.**	3	1	1	Square Feet

General Comments

Span 1 — Latex Modified Concrete Wearing Surface

Concrete Wearing Surface

Element Number	Element Name	Total Qty	CS1 Qty	CS2 Qty	CS3 Qty	CS4 Qty	
510	Wearing Surface	1,459	1,279	180	0	0	Square Feet

Element Number	Defect Type	Defect Description	CS	CS Qty	Maint Qty	
510	**Crack (Wearing Surface)**	**WEARING SURFACE HAS SCATTERED MAP CRACKS UP TO 1/16" WIDE.**	2	150		Square Feet
510	**Patched Area/Pothole (Wearing Surface)**	**RIGHT LANE HAS A 5' WIDE X 6' LONG PATCH IN GOOD CONDITION.**	2	30		Square Feet

General Comments

Span 2 — Deck

Reinforced Concrete Deck

Element Number	Element Name	Total Qty	CS1 Qty	CS2 Qty	CS3 Qty	CS4 Qty	
12	Reinforced Concrete Deck	1,902	0	1,401	501	0	Square Feet

Element Number	Defect Type	Defect Description	CS	CS Qty	Maint Qty	
12	**Cracking (RC and Other)**	**LONGITUDINAL AND TRANSVERSE CRACKS UP TO 1/16" WIDE X UP TO FULL LENGTH AND FULL WIDTH SCATTERED THROUGHOUT SPAN ON TOP OF DECK**	3	500	500	Square Feet
12	**Delamination/Spall**	**SPALL, 6" X 4" X 1/2" DEEP IN UNDERSIDE OF LEFT OVERHANG AT BENT 1 WITH EXPOSED REBAR, NO SECTION LOSS**	3	1	1	Square Feet
12	**Abrasion/Wear (PSC/RC)**	**ABRASION AND WEAR THROUGHOUT TOP OF DECK, AGGREGATE IS SECURE**	2	1,397		Square Feet
12	**Cracking (RC and Other)**	**FULL WIDTH HAIRLINE TRANSVERSE CRACK WITH EFFLORESCENCE IN UNDERSIDE OF DECK IN BAY 3, 15 FT FROM BENT 1**	2			Square Feet
12	**Patched Areas**	**TOP OF DECK HAS A 2.5 FT X 1.5 FT SOUND CONCRETE PATCH IN THE RIGHT LANE AT BENT 2**	2	4		Square Feet

General Comments

Span 2 Beam 1

Plate Girder

Element Number	Element Name	Total Qty	CS1 Qty	CS2 Qty	CS3 Qty	CS4 Qty	
107	Steel Open Girder/Beam	61	0	61	0	0	Feet
515	Steel Protective Coating	555	444	61	50	0	Square Feet

Element Number	Defect Type	Defect Description	CS	CS Qty	Maint Qty	
107	**Corrosion**	**CORROSION ON BOTTOM FLANGE FOR FULL LENGTH OF BEAM, NO MEASUREABLE SECTION LOSS**	2	61		Feet
107	**Corrosion**	**SCATTERED SURFACE CORROSION ON LOWER 8" OF WEB THROUGHOUT THE FULL LENGTH, NO MEASUREABLE SECTION LOSS**	2			Feet
107	**Damage**	**SPAN 2 BENT 1 BAY 1 DIAPHRAGM HAS A FULL WIDTH X FULL LENGTH SOUND PATCHES IN THE UNDERSIDE; SIMILAR AT SPAN 2.**	2			Feet
515	**Peeling/Bubbling/Cracking (steel Protective Coatings)**	**PAINT PEELING, SURFACE AND BASE COATS, THROUGHOUT THE INSIDE FACE OF THE WEB.**	3	50	50	Square Feet
515	**Effectiveness (Steel Protective Coatings)**	**LIMITED EFFECTIVENESS WITH CORROSION COMING THROUGH IN THE BOTTOM FLANGE AND WEB**	2	61	61	Square Feet

General Comments

Span 2 Beam 2

Plate Girder

Element Number	Element Name	Total Qty	CS1 Qty	CS2 Qty	CS3 Qty	CS4 Qty	
107	Steel Open Girder/Beam	61	0	61	0	0	Feet
515	Steel Protective Coating	555	464	0	91	0	Square Feet

Element Number	Defect Type	Defect Description	CS	CS Qty	Maint Qty	
107	**Damage**	**BENT 2 BAY 2 DIAPHRAGM UNDERSIDE HAS A 3 FT LONG X FULL WIDTH UNSOUND, DELAMINATED PATCH WITH A FULL WIDTH X 1/8" WIDE HORIZONTAL CRACK.**	3			Feet
107	**Corrosion**	**CORROSION ON BOTTOM FLANGE FOR FULL LENGTH OF BEAM, NO MEASUREABLE SECTION LOSS**	2	61		Feet
107	**Corrosion**	**SCATTERED SURFACE CORROSION ON LOWER 8" OF WEB AND TOP FLANGE THROUGHOUT THE FULL LENGTH, NO MEASUREABLE SECTION LOSS**	2			Feet
107	**Damage**	**SPAN 2 BENT 1 BAY 2 DIAPHRAGM HAS A FULL WIDTH X FULL LENGTH SOUND PATCHES IN THE UNDERSIDE.**	2			Feet
515	**Effectiveness (Steel Protective Coatings)**	**LIMITED EFFECTIVENESS WITH CORROSION COMING THROUGH IN THE BOTTOM FLANGE AND WEB**	3	61	61	Square Feet
515	**Peeling/Bubbling/Cracking (steel Protective Coatings)**	**PAINT PEELING, SURFACE AND BASE COATS, SCATTERED THROGHOUT THE WEB, FULL LENGTH.**	3	30	30	Square Feet

General Comments

Span 2 Beam 3

Plate Girder

Element Number	Element Name	Total Qty	CS1 Qty	CS2 Qty	CS3 Qty	CS4 Qty	
107	Steel Open Girder/Beam	61	31	30	0	0	Feet
515	Steel Protective Coating	555	494	0	61	0	Square Feet

Element Number	Defect Type	Defect Description	CS	CS Qty	Maint Qty

107	**Corrosion**	**CORROSION ON BOTTOM FLANGE SCATTERED THROUGHOUT SPAN, NO MEASUREABLE SECTION LOSS**	2	30		Feet
107	**Damage**	**SPAN 2 BENT 1 BAY 2 DIAPHRAGM HAS A FULL WIDTH X FULL LENGTH SOUND PATCHES IN THE UNDERSIDE; SIMILAR AT SPAN 2.**	2			Feet
515	**Effectiveness (Steel Protective Coatings)**	**LIMITED EFFECTIVENESS WITH CORROSION COMING THROUGH IN THE BOTTOM FLANGE**	3	61	61	Square Feet

General Comments

Span 2 Beam 4

Plate Girder

Element Number	Element Name	Total Qty	CS1 Qty	CS2 Qty	CS3 Qty	CS4 Qty	
107	Steel Open Girder/Beam	61	0	61	0	0	Feet
515	Steel Protective Coating	555	494	0	61	0	Square Feet

Element Number	Defect Type	Defect Description	CS	CS Qty	Maint Qty	
107	**Damage**	**FULL HEIGHT VERTICAL CRACK UP TO 1/8" WIDE WITH RUST STAINING ON BENT DIAPHRAGM AT BENT 2, OUTSIDE GIRDER 4**	3		1	Feet
107	**Corrosion**	**CORROSION ON BOTTOM FLANGE AND LOWER 3" OF THE WEB SCATTERED THROUGHOUT SPAN, NO MEASUREABLE SECTION LOSS**	2	61		Feet
107	**Corrosion**	**SURFACE CORROSION UP TO THE FULL HEIGHT OF THE WEB AND BEARING STIFFENER FOR 6 FT AT BENT 1**	2			Feet
515	**Effectiveness (Steel Protective Coatings)**	**LIMITED EFFECTIVENESS WITH CORROSION COMING THROUGH IN THE BOTTOM FLANGE AND WEB**	3	61	61	Square Feet

General Comments

Span 2 Left Bridge Rail

Concrete and Metal Railing

Element Number	Element Name	Total Qty	CS1 Qty	CS2 Qty	CS3 Qty	CS4 Qty	
333	Other Bridge Railing	61	0	61	0	0	Feet
515	Steel Protective Coating	61	61	0	0	0	Square Feet

Element Number	Defect Type	Defect Description	CS	CS Qty	Maint Qty	
333	**Damage**	**THE LEFT RAIL HAS MINOR SCRAPE DAMAGE, WITH 2" X 2" TEARS IN THE STEEL FOR THE FULL LENGTH. GUARDRAIL CONTINUES TO FUNCTION.**	2	61	61	Feet

General Comments

Span 2 Near Bearing

Fixed Bearing

Element Number	Element Name	Total Qty	CS1 Qty	CS2 Qty	CS3 Qty	CS4 Qty	
313	Fixed Bearing	1	0	1	0	0	Each
515	Steel Protective Coating	1	0	0	1	0	Square Feet

Element Number	Defect Type	Defect Description	CS	CS Qty	Maint Qty	
313	**Corrosion**	**SURFACE CORROSION ON THE BEARING PLATES.**	2	1		Each
515	**Effectiveness (Steel Protective Coatings)**	**LOSS OF PAINT ALLOWING SURFACE CORROSION ON THE BEARING PLATES.**	3	1	1	Square Feet

General Comments

Span 2 Far Bearing

Movable Bearing

Element Number	Element Name	Total Qty	CS1 Qty	CS2 Qty	CS3 Qty	CS4 Qty	
311	Movable Bearing	1	0	0	1	0	Each
515	Steel Protective Coating	1	0	0	0	1	Square Feet

Element Number	Defect Type	Defect Description	CS	CS Qty	Maint Qty	
311	**Corrosion**	**CORROSION WITH PACK RUST, NO MEASURABLE SECTION LOSS, ON THE BEARING PLATES.**	3	1	1	Each
515	**Effectiveness (Steel Protective Coatings)**	**COATING HAS FAILED.**	4	1	1	Square Feet

General Comments

Span 2 Near Bearing

Fixed Bearing

Element Number	Element Name	Total Qty	CS1 Qty	CS2 Qty	CS3 Qty	CS4 Qty	
313	Fixed Bearing	1	0	1	0	0	Each
515	Steel Protective Coating	1	0	0	1	0	Square Feet

Element Number	Defect Type	Defect Description	CS	CS Qty	Maint Qty	
313	**Corrosion**	**SURFACE CORROSION ON THE BEARING PLATES.**	2	1		Each
515	**Effectiveness (Steel Protective Coatings)**	**LOSS OF PAINT ALLOWING SURFACE CORROSION ON THE BEARING PLATES.**	3	1	1	Square Feet

General Comments

Span 2 Far Bearing

Movable Bearing

Element Number	Element Name	Total Qty	CS1 Qty	CS2 Qty	CS3 Qty	CS4 Qty	
311	Movable Bearing	1	0	0	1	0	Each
515	Steel Protective Coating	1	0	0	0	1	Square Feet

Element Number	Defect Type	Defect Description	CS	CS Qty	Maint Qty	
311	**Corrosion**	**CORROSION WITH PACK RUST, NO MEASURABLE SECTION LOSS, ON THE BEARING PLATES.**	3	1	1	Each
515	**Effectiveness (Steel Protective Coatings)**	**COATING HAS FAILED.**	4	1	1	Square Feet

General Comments

Span 2 Near Bearing

Fixed Bearing

Element Number	Element Name	Total Qty	CS1 Qty	CS2 Qty	CS3 Qty	CS4 Qty	
313	Fixed Bearing	1	0	1	0	0	Each
515	Steel Protective Coating	1	0	0	1	0	Square Feet

Element Number	Defect Type	Defect Description	CS	CS Qty	Maint Qty	
313	**Corrosion**	**SURFACE CORROSION ON THE BEARING PLATES.**	2	1		Each

515	**Effectiveness (Steel Protective Coatings)**	**LOSS OF PAINT ALLOWING SURFACE CORROSION ON THE BEARING PLATES.**	3	1	1	Square Feet

General Comments

Span 2 Far Bearing

Movable Bearing

Element Number	Element Name	Total Qty	CS1 Qty	CS2 Qty	CS3 Qty	CS4 Qty	
311	Movable Bearing	1	0	0	1	0	Each
515	Steel Protective Coating	1	0	0	1	0	Square Feet

Element Number	Defect Type	Defect Description	CS	CS Qty	Maint Qty	
311	**Corrosion**	**CORROSION WITH PACK RUST, NO MEASURABLE SECTION LOSS, ON THE BEARING PLATES.**	3	1	1	Each
515	**Effectiveness (Steel Protective Coatings)**	**LOSS OF PAINT ALLOWING SURFACE CORROSION ON THE BEARING PLATES.**	3	1	1	Square Feet

General Comments

Span 2 Near Bearing

Fixed Bearing

Element Number	Element Name	Total Qty	CS1 Qty	CS2 Qty	CS3 Qty	CS4 Qty	
313	Fixed Bearing	1	0	0	1	0	Each
515	Steel Protective Coating	1	0	0	0	1	Square Feet

Element Number	Defect Type	Defect Description	CS	CS Qty	Maint Qty	
313	**Corrosion**	**CORROSION WITH PACK RUST, NO MEASURABLE SECTION LOSS, ON THE BEARING PLATES.**	3	1	1	Each
515	**Effectiveness (Steel Protective Coatings)**	**COATING HAS FAILED.**	4	1	1	Square Feet

General Comments

Span 2 Far Bearing

Movable Bearing

Element Number	Element Name	Total Qty	CS1 Qty	CS2 Qty	CS3 Qty	CS4 Qty	
311	Movable Bearing	1	0	0	1	0	Each
515	Steel Protective Coating	1	0	0	0	1	Square Feet

Element Number	Defect Type	Defect Description	CS	CS Qty	Maint Qty	
311	**Corrosion**	**CORROSION WITH PACK RUST, NO MEASURABLE SECTION LOSS, ON THE BEARING PLATES.**	3	1	1	Each
515	**Effectiveness (Steel Protective Coatings)**	**COATING HAS FAILED.**	4	1	1	Square Feet

General Comments

Span 2 Latex Modified Concrete Wearing Surface

Concrete Wearing Surface

Element Number	Element Name	Total Qty	CS1 Qty	CS2 Qty	CS3 Qty	CS4 Qty	
510	Wearing Surface	1,695	1,545	150	0	0	Square Feet

Element Number	Defect Type	Defect Description	CS	CS Qty	Maint Qty	
510	**Crack (Wearing Surface)**	**WEARING SURFACE HAS SCATTERED MAP CRACKS UP TO 1/16" WIDE.**	2	150		Square Feet

General Comments

Span 3 Deck

Reinforced Concrete Deck

Element Number	Element Name	Total Qty	CS1 Qty	CS2 Qty	CS3 Qty	CS4 Qty	
12	Reinforced Concrete Deck	1,919	0	1,419	500	0	Square Feet

Element Number	Defect Type	Defect Description	CS	CS Qty	Maint Qty	
12	**Cracking (RC and Other)**	**LONGITUDINAL AND TRANSVERSE CRACKS UP TO 1/16" WIDE X UP TO FULL WIDTH AND LENGTH SCATTERED THROUGHOUT SPAN ON TOP OF DECK**	3	500	500	Square Feet
12	**Abrasion/Wear (PSC/RC)**	**ABRASION AND WEAR THROUGHOUT TOP OF DECK, AGGREGATE IS SECURE**	2	1,419		Square Feet

General Comments

Span 3 Beam 1

Plate Girder

Element Number	Element Name	Total Qty	CS1 Qty	CS2 Qty	CS3 Qty	CS4 Qty	
107	Steel Open Girder/Beam	61	0	61	0	0	Feet
515	Steel Protective Coating	556	495	0	61	0	Square Feet

Element Number	Defect Type	Defect Description	CS	CS Qty	Maint Qty	
107	**Corrosion**	**CORROSION ON THE BOTTOM FLANGE FOR THE FULL LENGTH OF THE GIRDER, NO MEASUREABLE SECTION LOSS, SIMILAR ON THE TOP FLANGE FOR 10 FT SCATTERED THROUGHOUT SPAN**	2	61		Feet
515	**Effectiveness (Steel Protective Coatings)**	**LIMITED EFFECTIVENESS WITH CORROSION COMING THROUGH IN THE BOTTOM FLANGE AND TOP FLANGE**	3	61	61	Square Feet

General Comments

Span 3 Beam 2

Plate Girder

Element Number	Element Name	Total Qty	CS1 Qty	CS2 Qty	CS3 Qty	CS4 Qty	
107	Steel Open Girder/Beam	61	0	61	0	0	Feet
515	Steel Protective Coating	556	495	0	61	0	Square Feet

Element Number	Defect Type	Defect Description	CS	CS Qty	Maint Qty	
107	**Corrosion**	**CORROSION ON BOTTOM FLANGE FOR FULL LENGTH OF BEAM, NO MEASUREABLE SECTION LOSS**	2	61		Feet
515	**Effectiveness (Steel Protective Coatings)**	**LIMITED EFFECTIVENESS WITH CORROSION COMING THROUGH IN THE BOTTOM FLANGE**	3	61	61	Square Feet

General Comments

Span 3 Beam 3

Plate Girder

Element Number	Element Name	Total Qty	CS1 Qty	CS2 Qty	CS3 Qty	CS4 Qty	
107	Steel Open Girder/Beam	61	18	43	0	0	Feet
515	Steel Protective Coating	556	495	0	61	0	Square Feet

Element Number	Defect Type	Defect Description	CS	CS Qty	Maint Qty	
107	**Corrosion**	**CORROSION ON THE BOTTOM FLANGE FOR THE FULL LENGTH OF THE GIRDER, NO MEASUREABLE SECTION LOSS**	2	43		Feet
515	**Effectiveness (Steel Protective Coatings)**	**LIMITED EFFECTIVENESS WITH CORROSION COMING THROUGH IN THE BOTTOM FLANGE**	3	61	61	Square Feet

General Comments

Span 3 Beam 4

Plate Girder

Element Number	Element Name	Total Qty	CS1 Qty	CS2 Qty	CS3 Qty	CS4 Qty	
107	Steel Open Girder/Beam	61	0	61	0	0	Feet
515	Steel Protective Coating	556	375	0	181	0	Square Feet

Element Number	Defect Type	Defect Description	CS	CS Qty	Maint Qty	
107	**Damage**	**BENT 2 DIAPHRAGM OUTSIDE OF GIRDER 4 IN THE WEST FACE HAS A FULL HEIGHT VERTICAL CRACK UP TO 1/16" WIDE**	3			Feet
107	**Corrosion**	**CORROSION ON THE BOTTOM FLANGE FOR THE FULL LENGTH OF THE GIRDER, NO MEASUREABLE SECTION LOSS, SIMILAR ON THE OUTSIDE FACE OF THE WEB UP TO FULL HEIGHT, FULL LENGTH OF SPAN**	2	61		Feet
515	**Effectiveness (Steel Protective Coatings)**	**LIMITED EFFECTIVENESS WITH CORROSION COMING THROUGH IN THE BOTTOM FLANGE**	3	61	61	Square Feet
515	**Peeling/Bubbling/Cracking (steel Protective Coatings)**	**PAINT PEELING, SURFACE AND BASE COATS, THROUGHOUT THE WEB.**	3	120	120	Square Feet

General Comments

Span 3 Expansion Joint at Bent 2

Compression Seal

Element Number	Element Name	Total Qty	CS1 Qty	CS2 Qty	CS3 Qty	CS4 Qty	
302	Compression Joint Seal	36	34	0	2	0	Feet

Element Number	Defect Type	Defect Description	CS	CS Qty	Maint Qty	
302	**Seal Adhesion**	**ADHESION LOSS UP TO FULL DEPTH FOR 2 FT LONG IN THE RIGHT LANE AT THE GUTTER LINE**	3	2		Feet

General Comments

Span 3 — Expansion Joint at End Bent 2

Compression Seal

Element Number	Element Name	Total Qty	CS1 Qty	CS2 Qty	CS3 Qty	CS4 Qty	
302	Compression Joint Seal	36	34	2	0	0	Feet

Element Number	Defect Type	Defect Description	CS	CS Qty	Maint Qty	
302	**Adjacent Deck or Header**	**APPROACH SLAB HEADER HAS A SOUND PATCH, 16" X 24", AT THE CENTERLINE OF THE ROADWAY.**	2	2		Feet

General Comments

Span 3 — Left Bridge Rail

Concrete and Metal Railing

Element Number	Element Name	Total Qty	CS1 Qty	CS2 Qty	CS3 Qty	CS4 Qty	
333	Other Bridge Railing	62	0	62	0	0	Feet
515	Steel Protective Coating	62	62	0	0	0	Square Feet

Element Number	Defect Type	Defect Description	CS	CS Qty	Maint Qty	
333	**Damage**	**THE LEFT RAIL HAS MINOR SCRAPE DAMAGE, WITH 2" X 2" TEARS IN THE STEEL FOR THE FULL LENGTH. GUARDRAIL CONTINUES TO FUNCTION.**	2	62	62	Feet

General Comments

Span 3 — Right Bridge Rail

Concrete and Metal Railing

Element Number	Element Name	Total Qty	CS1 Qty	CS2 Qty	CS3 Qty	CS4 Qty	
333	Other Bridge Railing	62	56	0	6	0	Feet
515	Steel Protective Coating	62	62	0	0	0	Square Feet

Element Number	Defect Type	Defect Description	CS	CS Qty	Maint Qty	
333	**Delamination/Spall**	**SPALL, 6 FT X 5" X 1" ON FRONT FACE OF RAIL NEAR BENT 2 WITH NO EXPOSED REBAR, NO SECTION LOSS**	3	6	6	Feet

General Comments

Span 3 — Near Bearing

Movable Bearing

Element Number	Element Name	Total Qty	CS1 Qty	CS2 Qty	CS3 Qty	CS4 Qty	
311	Movable Bearing	1	0	0	1	0	Each
515	Steel Protective Coating	1	0	0	0	1	Square Feet

Element Number	Defect Type	Defect Description	CS	CS Qty	Maint Qty	
311	**Corrosion**	**CORROSION WITH PACK RUST, NO MEASURABLE SECTION LOSS, ON THE BEARING PLATES.**	3	1	1	Each
515	**Effectiveness (Steel Protective Coatings)**	**COATING HAS FAILED.**	4	1	1	Square Feet

General Comments

Span 3 Far Bearing

Fixed Bearing

Element Number	Element Name	Total Qty	CS1 Qty	CS2 Qty	CS3 Qty	CS4 Qty	
313	Fixed Bearing	1	0	0	1	0	Each
515	Steel Protective Coating	1	0	0	1	0	Square Feet

Element Number	Defect Type	Defect Description	CS	CS Qty	Maint Qty	
313	**Corrosion**	**CORROSION WITH PACK RUST, NO MEASURABLE SECTION LOSS, ON THE BEARING PLATES.**	3	1	1	Each
515	**Effectiveness (Steel Protective Coatings)**	**COATING HAS FAILED.**	3	1	1	Square Feet

General Comments

Span 3 Near Bearing

Movable Bearing

Element Number	Element Name	Total Qty	CS1 Qty	CS2 Qty	CS3 Qty	CS4 Qty	
311	Movable Bearing	1	0	0	1	0	Each
515	Steel Protective Coating	1	0	0	0	1	Square Feet

Element Number	Defect Type	Defect Description	CS	CS Qty	Maint Qty	
311	**Corrosion**	**CORROSION WITH PACK RUST, NO MEASURABLE SECTION LOSS, ON THE BEARING PLATES.**	3	1	1	Each
515	**Effectiveness (Steel Protective Coatings)**	**COATING HAS FAILED.**	4	1	1	Square Feet

General Comments

Span 3 Far Bearing

Fixed Bearing

Element Number	Element Name	Total Qty	CS1 Qty	CS2 Qty	CS3 Qty	CS4 Qty	
313	Fixed Bearing	1	0	1	0	0	Each
515	Steel Protective Coating	1	0	0	1	0	Square Feet

Element Number	Defect Type	Defect Description	CS	CS Qty	Maint Qty	
313	**Corrosion**	**SURFACE CORROSION ON THE BEARING PLATES.**	2	1		Each
515	**Effectiveness (Steel Protective Coatings)**	**LOSS OF PAINT ALLOWING SURFACE CORROSION ON THE BEARING PLATES.**	3	1	1	Square Feet

General Comments

Span 3 Near Bearing

Movable Bearing

Element Number	Element Name	Total Qty	CS1 Qty	CS2 Qty	CS3 Qty	CS4 Qty	
311	Movable Bearing	1	0	0	1	0	Each
515	Steel Protective Coating	1	0	0	0	1	Square Feet

Element Number	Defect Type	Defect Description	CS	CS Qty	Maint Qty	
311	**Corrosion**	**CORROSION WITH PACK RUST, NO MEASURABLE SECTION LOSS, ON THE BEARING PLATES.**	3	1	1	Each

515	**Effectiveness (Steel Protective Coatings)**	**COATING HAS FAILED.**	4	1	1	Square Feet

General Comments

Span 3 Far Bearing

Fixed Bearing

Element Number	Element Name	Total Qty	CS1 Qty	CS2 Qty	CS3 Qty	CS4 Qty	
313	Fixed Bearing	1	0	1	0	0	Each
515	Steel Protective Coating	1	0	0	1	0	Square Feet

Element Number	Defect Type	Defect Description	CS	CS Qty	Maint Qty	
313	**Corrosion**	**SURFACE CORROSION ON THE BEARING PLATES.**	2	1		Each
515	**Effectiveness (Steel Protective Coatings)**	**LOSS OF PAINT ALLOWING SURFACE CORROSION ON THE BEARING PLATES.**	3	1	1	Square Feet

General Comments

Span 3 Near Bearing

Movable Bearing

Element Number	Element Name	Total Qty	CS1 Qty	CS2 Qty	CS3 Qty	CS4 Qty	
311	Movable Bearing	1	0	0	1	0	Each
515	Steel Protective Coating	1	0	0	0	1	Square Feet

Element Number	Defect Type	Defect Description	CS	CS Qty	Maint Qty	
311	**Corrosion**	**CORROSION WITH PACK RUST, NO MEASURABLE SECTION LOSS, ON THE BEARING PLATES.**	3	1	1	Each
515	**Effectiveness (Steel Protective Coatings)**	**COATING HAS FAILED.**	4	1	1	Square Feet

General Comments

Span 3 Far Bearing

Fixed Bearing

Element Number	Element Name	Total Qty	CS1 Qty	CS2 Qty	CS3 Qty	CS4 Qty	
313	Fixed Bearing	1	0	0	1	0	Each
515	Steel Protective Coating	1	0	0	1	0	Square Feet

Element Number	Defect Type	Defect Description	CS	CS Qty	Maint Qty	
313	**Corrosion**	**CORROSION WITH PACK RUST, NO MEASURABLE SECTION LOSS, ON THE BEARING PLATES.**	3	1	1	Each
515	**Effectiveness (Steel Protective Coatings)**	**COATING HAS FAILED.**	3	1	1	Square Feet

General Comments

Span 3 — Latex Modified Concrete Wearing Surface

Concrete Wearing Surface

Element Number	Element Name	Total Qty	CS1 Qty	CS2 Qty	CS3 Qty	CS4 Qty	
510	Wearing Surface	1,710	1,560	150	0	0	Square Feet

Element Number	Defect Type	Defect Description	CS	CS Qty	Maint Qty	
510	**Crack (Wearing Surface)**	**WEARING SURFACE HAS SCATTERED MAP CRACKS UP TO 1/16" WIDE.**	2	150		Square Feet

General Comments

End Bent 1 — Abutment

Reinforced Concrete Abutment

Element Number	Element Name	Total Qty	CS1 Qty	CS2 Qty	CS3 Qty	CS4 Qty	
215	Reinforced Concrete Abutment	42	40	0	2	0	Feet

Element Number	Defect Type	Defect Description	CS	CS Qty	Maint Qty	
215	**Cracking (RC and Other)**	**6" DIAGONAL CRACK UP TO 1/16" WIDE IN BACKWALL OF BAY 3 AT GIRDER 4**	3	1	1	Feet
215	**Delamination/Spall**	**DELAMINATION, 1 FT X 6" IN BAY 2 BACKWALL AT GIRDER 3**	3	1	1	Feet

General Comments

End Bent 1 — Cap 1

Reinforced Concrete Pier Cap

Element Number	Element Name	Total Qty	CS1 Qty	CS2 Qty	CS3 Qty	CS4 Qty	
234	Reinforced Concrete Pier Cap	38	35	3	0	0	Feet

Element Number	Defect Type	Defect Description	CS	CS Qty	Maint Qty	
234	**Cracking (RC and Other)**	**3 FT HAIRLINE HORIZONTAL CRACK IN TOP OF CAP IN BAY 3**	2	3		Feet

General Comments

Bent 1 — Cap 1

Reinforced Concrete Pier Cap

Element Number	Element Name	Total Qty	CS1 Qty	CS2 Qty	CS3 Qty	CS4 Qty	
234	Reinforced Concrete Pier Cap	30	0	29	1	0	Feet

Element Number	Defect Type	Defect Description	CS	CS Qty	Maint Qty	
234	**Delamination/Spall**	**DELAMINATION, 12" DIAMETER ON SOUTH END OF CAP WITH CRACKING UP TO 1/16" WIDE AND THE FULL HEIGHT AND WIDTH OF CAP**	3	1	3	Feet
234	**Patched Area**	**1 FT LONG X 1 FT WIDE X 5" TALL SOUND PATCH IN THE TOP OF THE CAP BELOW GIRDER 2.**	2			Feet
234	**Patched Area**	**14 FT X FULL WIDTH SOUND PATCH IN THE UNDERSIDE OF THE CAP BETWEEN COLUMNS 1 AND 2.**	2	8		Feet
234	**Patched Area**	**2 SOUND PATCHES ON THE EAST FACE UNDER BEAM 1, 5.5 FT X 2.5 FT**	2	6		Feet
234	**Patched Area**	**SOUND PATCH IN THE WEST FACE OF THE CAP UNDER BAY 3 UP TO FULL HEIGHT X 10 FT LONG.**	2			Feet

234	**Patched Area**	**SOUND PATCH ON WEST FACE UNDER GIRDER 2, 6 FT X 2 FT; SIMILAR SOUND PATCHES UP TO 3 FT X 3 FT SCATTERED THROUGHOUT THE FACES OF THE CAP**	2	15	Feet

General Comments

Bent 1 Pile 2

Reinforced Concrete Column

Element Number	Element Name	Total Qty	CS1 Qty	CS2 Qty	CS3 Qty	CS4 Qty	
205	Reinforced Concrete Column	1	0	1	0	0	Each

Element Number	Defect Type	Defect Description	CS	CS Qty	Maint Qty	
205	**Patched Area**	**SOUND PATCH ON SOUTH FACE NEAR GROUND LINE, 4 FT HIGH X FULL WIDTH**	2	1		Each

General Comments

Bent 2 Cap 1

Reinforced Concrete Pier Cap

Element Number	Element Name	Total Qty	CS1 Qty	CS2 Qty	CS3 Qty	CS4 Qty	
234	Reinforced Concrete Pier Cap	30	8	17	5	0	Feet

Element Number	Defect Type	Defect Description	CS	CS Qty	Maint Qty	
234	**Delamination/Spall**	**DELAMINATION, 12" X 6" ON WEST FACE OF CAP BELOW BAY 3**	3	1	1	Feet
234	**Delamination/Spall**	**DELAMINATION, 15" X 8" ON UNDERSIDE OF CAP ADJACENT TO COLUMN 1 IN LEFT OVERHANG.**	3	1	2	Feet
234	**Patched Area**	**UNSOUND PATCH, 2.5 FT X 1.5 FT ON UNDERSIDE OF CAP UNDER BAY 2 WITH CRACKING UP TO 1/16" WIDE THROUGHOUT**	3	3	6	Feet
234	**Exposed Rebar**	**EXPOSED REBAR, 6" X 1" ON NORTH END OF CAP, NO SECTION LOSS**	2	1	1	Feet
234	**Patched Area**	**8 FT X 3 FT SOUND PATCH IN THE WEST FACE OF THE CAP BELOW GIRDER 2**	2	8		Feet
234	**Patched Area**	**FULL HEIGHT X 1 FT LONG SOUND PATCH IN THE END OF THE WEST FACE**	2	2		Feet
234	**Patched Area**	**FULL HEIGHT X 6 FT LONG SOUND PATCH IN THE EAST FACE BELOW GIRDER 4**	2	6		Feet

General Comments

Bent 2 Pile 1

Reinforced Concrete Column

Element Number	Element Name	Total Qty	CS1 Qty	CS2 Qty	CS3 Qty	CS4 Qty	
205	Reinforced Concrete Column	1	0	1	0	0	Each

Element Number	Defect Type	Defect Description	CS	CS Qty	Maint Qty	
205	**Cracking (RC and Other)**	**4 FT HAIRLINE VERTICAL CRACK ON WEST FACE OF COLUMN NEAR GROUNDLINE**	2	1		Each

General Comments

End Bent 2 Abutment

Reinforced Concrete Abutment

Element Number	Element Name	Total Qty	CS1 Qty	CS2 Qty	CS3 Qty	CS4 Qty	
215	Reinforced Concrete Abutment	42	41	0	1	0	Feet

Element Number	Defect Type	Defect Description	CS	CS Qty	Maint Qty	
215	**Delamination/Spall**	**DELAMINATION, 12" X 4" ON BACKWALL OF BAY 3 ADJACENT TO BOTTOM FLANGE OF GIRDER 3**	3	1	1	Feet

General Comments

End Bent 2 Cap 1

Reinforced Concrete Pier Cap

Element Number	Element Name	Total Qty	CS1 Qty	CS2 Qty	CS3 Qty	CS4 Qty	
234	Reinforced Concrete Pier Cap	39	28	11	0	0	Feet

Element Number	Defect Type	Defect Description	CS	CS Qty	Maint Qty	
234	**Patched Area**	**11' LONG X 2' HIGH PATCH ON THE RIGHT END OF THE END BENT CAP IS IN GOOD CONDITION.**	2	11		Feet

General Comments

Approach 1

Reinforced Concrete Approach Slab

Element Number	Element Name	Total Qty	CS1 Qty	CS2 Qty	CS3 Qty	CS4 Qty	
321	Reinforced Concrete Approach Slabs	280	218	24	38	0	Square Feet

Element Number	Defect Type	Defect Description	CS	CS Qty	Maint Qty	
321	**Cracking (RC and Other)**	**12" DIAGONAL CRACK UP TO 1/2" WIDE AT CENTERLINE OF WEST APPROACH SLAB**	3	1	1	Square Feet
321	**Cracking (RC and Other)**	**5 DIAGONAL CRACKS UP TO 1/16" WIDE AND UP TO 5 FT LONG SCATTERED THROUGHOUT, PERPENDICULAR TO JOINT.**	3	25	25	Square Feet
321	**Delamination/Spall**	**4 SPALLS UP TO 8" X 4" X 1.5" DEEP ALONG WEST END OF APPROACH SLAB AT APPROACH ROADWAY, NO EXPOSED REBAR**	3	4	4	Square Feet
321	**Delamination/Spall**	**TWO DELAMINATIONS IN THE LEFT LANE AT EDGE OF APPROACH ROADWAY UP TO 18"' X 24".**	3	8	8	Square Feet
321	**Patched Area**	**THE EAST APPROACH WEARING SURFACE AND APPROACH SLAB ARE PATCHED IN THE RIGHT LANE. PATCHES ARE IN GOOD CONDITION UP TO 4 FT X 6 FT**	2	24		Square Feet

General Comments

Approach 2

Reinforced Concrete Approach Slab

Element Number	Element Name	Total Qty	CS1 Qty	CS2 Qty	CS3 Qty	CS4 Qty	
321	Reinforced Concrete Approach Slabs	280	63	72	145	0	Square Feet

Element Number	Defect Type	Defect Description	CS	CS Qty	Maint Qty	
321	**Cracking (RC and Other)**	**SCATTERED MAP CRACKING UP TO 1/16" WIDE THROUGHOUT APPROACH SLAB**	3	70	70	Square Feet
321	**Cracking (RC and Other)**	**THREE FULL LENGTH LONGITUDINAL CRACKS UP TO 1/8" WIDE SACTTERED**	3	75	75	Square Feet

321	**Patched Area**	**THE EAST APPROACH WEARING SURFACE AND APPROACH SLAB ARE PATCHED IN THE RIGHT LANE. PATCHES ARE IN GOOD CONDITION, UP TO 12 FT X 6 FT**	2	72	Square Feet

General Comments

Elements Verfied

Location	Name	Component	Element Name	Amount
Span 1	Deck	Reinforced Concrete Deck	Reinforced Concrete Deck	1637
Span 1	Beam 1	Plate Girder	Steel Open Girder/Beam	52
Span 1	Beam 2	Plate Girder	Steel Open Girder/Beam	52
Span 1	Beam 3	Plate Girder	Steel Open Girder/Beam	52
Span 1	Beam 4	Plate Girder	Steel Open Girder/Beam	52
Span 1	Left Bridge Rail	Concrete and Metal Railing	Other Bridge Railing	53
Span 1	Right Bridge Rail	Concrete and Metal Railing	Other Bridge Railing	53
Span 1	Expansion Joint at End Bent 1	Compression Seal	Compression Joint Seal	36
Span 1	Latex Modified Concrete Wearing Surface	Concrete Wearing Surface	Wearing Surface	1459
Span 1	Far Bearing	Movable Bearing	Movable Bearing	1
Span 1	Near Bearing	Fixed Bearing	Fixed Bearing	1
Span 1	Near Bearing	Fixed Bearing	Fixed Bearing	1
Span 1	Far Bearing	Movable Bearing	Movable Bearing	1
Span 1	Far Bearing	Movable Bearing	Movable Bearing	1
Span 1	Near Bearing	Fixed Bearing	Fixed Bearing	1
Span 1	Near Bearing	Fixed Bearing	Fixed Bearing	1
Span 1	Far Bearing	Movable Bearing	Movable Bearing	1
Span 2	Deck	Reinforced Concrete Deck	Reinforced Concrete Deck	1902
Span 2	Beam 1	Plate Girder	Steel Open Girder/Beam	61
Span 2	Beam 2	Plate Girder	Steel Open Girder/Beam	61
Span 2	Beam 3	Plate Girder	Steel Open Girder/Beam	61
Span 2	Beam 4	Plate Girder	Steel Open Girder/Beam	61
Span 2	Left Bridge Rail	Concrete and Metal Railing	Other Bridge Railing	61
Span 2	Right Bridge Rail	Concrete and Metal Railing	Other Bridge Railing	61
Span 2	Expansion Joint at Bent 1	Compression Seal	Compression Joint Seal	36
Span 2	Latex Modified Concrete Wearing Surface	Concrete Wearing Surface	Wearing Surface	1695
Span 2	Far Bearing	Movable Bearing	Movable Bearing	1
Span 2	Near Bearing	Fixed Bearing	Fixed Bearing	1
Span 2	Near Bearing	Fixed Bearing	Fixed Bearing	1
Span 2	Far Bearing	Movable Bearing	Movable Bearing	1
Span 2	Far Bearing	Movable Bearing	Movable Bearing	1
Span 2	Near Bearing	Fixed Bearing	Fixed Bearing	1
Span 2	Near Bearing	Fixed Bearing	Fixed Bearing	1
Span 2	Far Bearing	Movable Bearing	Movable Bearing	1
Span 3	Deck	Reinforced Concrete Deck	Reinforced Concrete Deck	1919
Span 3	Beam 1	Plate Girder	Steel Open Girder/Beam	61
Span 3	Beam 2	Plate Girder	Steel Open Girder/Beam	61
Span 3	Beam 3	Plate Girder	Steel Open Girder/Beam	61
Span 3	Beam 4	Plate Girder	Steel Open Girder/Beam	61
Span 3	Left Bridge Rail	Concrete and Metal Railing	Other Bridge Railing	62
Span 3	Right Bridge Rail	Concrete and Metal Railing	Other Bridge Railing	62
Span 3	Expansion Joint at Bent 2	Compression Seal	Compression Joint Seal	36
Span 3	Expansion Joint at End Bent 2	Compression Seal	Compression Joint Seal	36

Elements Verfied

Location	Name	Component	Element Name	Amount
Span 3	Latex Modified Concrete Wearing Surface	Concrete Wearing Surface	Wearing Surface	1710
Span 3	Near Bearing	Movable Bearing	Movable Bearing	1
Span 3	Far Bearing	Fixed Bearing	Fixed Bearing	1
Span 3	Far Bearing	Fixed Bearing	Fixed Bearing	1
Span 3	Near Bearing	Movable Bearing	Movable Bearing	1
Span 3	Near Bearing	Movable Bearing	Movable Bearing	1
Span 3	Far Bearing	Fixed Bearing	Fixed Bearing	1
Span 3	Far Bearing	Fixed Bearing	Fixed Bearing	1
Span 3	Near Bearing	Movable Bearing	Movable Bearing	1
Bent 1	Cap 1	Reinforced Concrete Pier Cap	Reinforced Concrete Pier Cap	30
Bent 1	Pile 1	Reinforced Concrete Column	Reinforced Concrete Column	1
Bent 1	Pile 2	Reinforced Concrete Column	Reinforced Concrete Column	1
End Bent 1	Cap 1	Reinforced Concrete Pier Cap	Reinforced Concrete Pier Cap	38
End Bent 1	Abutment	Reinforced Concrete Abutment	Reinforced Concrete Abutment	42
Bent 2	Cap 1	Reinforced Concrete Pier Cap	Reinforced Concrete Pier Cap	30
Bent 2	Pile 1	Reinforced Concrete Column	Reinforced Concrete Column	1
Bent 2	Pile 2	Reinforced Concrete Column	Reinforced Concrete Column	1
End Bent 2	Cap 1	Reinforced Concrete Pier Cap	Reinforced Concrete Pier Cap	39
End Bent 2	Abutment	Reinforced Concrete Abutment	Reinforced Concrete Abutment	42
Approach1		Reinforced Concrete Approach Slab	Reinforced Concrete Approach Slabs	280
Approach2		Reinforced Concrete Approach Slab	Reinforced Concrete Approach Slabs	280

General Inspection Notes

Bent 1	Footing
NOT VISIBLE	
Bent 1	Pile 1
END BENT PILES ARE NOT VISIBLE	
Bent 2	Footing
NOT VISIBLE	
Bent 2	Pile 1
END BENT PILES ARE NOT VISIBLE.	

National Bridge and NC Inspection Items

Structure Number: 430248 **Inspection Date:** 02/12/2021

National Bridge Inventory Items

Item	Grade Scale	Grade
Item 58: Deck	0 - 9 , N	**6**
Item 59: Superstructure	0 - 9 , N	**6**
Item 60: Substructure	0 - 9 , N	**6**
Item 61: Channel and Channel Protection	0 - 9 , N	**N**
Item 62: Culvert	0 - 9 , N	**N**
Item 71: Waterway Adequacy	0 - 9 , N	**N**
Item 72: Approach Roadway Alignment	0 - 9 , N	**8**

Note: If NBI Inspection Item is not present, code NBI item with "N"

NC SMU Inspection Items

Item	Grade Scale	Grade	Maint. Qty.	Maint. Code
Deck Debris	G, F, P, or C	**G**	**0**	**3376**
Drainage System	G, F, P, or C	**G**	**0**	**3332**
Utilities	G, F, P, or C			
Slope Protection	G, F, P, or C		**0**	**3352**
Scour	G, F, P, or C			
Wingwall	G, F, P, or C	**F**	**2**	**3350**
Field Scour Evaluation				
Drift	G, F, P, or C		**0**	**3366**
Fender System	G, F, P, or C		**0**	**3364**
Movable Span Machinery	G, F, P, or C			
Response to Live Load	G, F, P, or C	**G**		
Superstructure Paint Code		**A**		

Note: If NC SMU Insepction Item is not present, leave NC SMU item blank

Inspection Information

Item	Grade Scale	Grade
Sign Noticed Issued	YES/NO	**N**
Priority Maintenance Request Submitted	YES/NO	**Y**
Inspection Time	Hours	**6**
Traffic Control Time	Hours	
Snooper Time	Hours	
Ladder Used	YES/NO	**Y**
Bucket Truck Used	YES/NO	**N**
Boat Used	YES/NO	**N**
Other Equipment Used	YES/NO	**N**
Portion of Structure in > 3' of water	YES/NO	**N**

National Bridge and NC SMU Inspection Item Details

Structure Number: 430248 **Inspection Date:** 02/12/2021

Item	Deck - Item 58	**Grade**	6	**Maint Code**		**Qty.**	0
Details	CRACKING AND ABRASION THROUGHOUT ALL SPANS.						
Item	Superstructure - Item 59	**Grade**	6	**Maint Code**		**Qty.**	0
Details	SURFACE CORROSION THROUGHOUT THE GIRDERS						
Item	Substructure - Item 60	**Grade**	6	**Maint Code**		**Qty.**	0
Details	DELAMINATIONS AND CRACKING THROUGHOUT THE SUBSTRUCTURE						
Item	Priority Maintenance Issued	**Grade**	Y	**Maint Code**		**Qty.**	0
Details	SPALL ON SOUTHEAST WINGWALL, 15" x 8" x 5" WITH NO EXPOSED REBAR WITH BACKFILL SPILLING THROUGH, PAR						
Item	Wingwalls	**Grade**	F	**Maint Code**	3350	**Qty.**	2
Details	SPALL ON SOUTHEAST WINGWALL, 15" x 8" x 5" WITH NO EXPOSED REBAR WITH BACKFILL SPILLING THROUGH, PAR						
Item	General Comments and Misc Items	**Grade**		**Maint Code**		**Qty.**	0
Details	WEST APPROACH ROADWAY NEAR THE CENTER OF TRAVEL LANES HAS A SOUND ASPHALT PATCH, 20 FT X 20 FT.						

SPALL ON SOUTHEAST WINGWALL, 15" x 8" x 5" WITH NO EXPOSED REBAR WITH BACKFILL SPILLING THROUGH, PAR

End Bent 2 Abutment: DELAMINATION, 12" X 4" ON BACKWALL OF BAY 3 ADJACENT TO BOTTOM FLANGE OF GIRDER 3

Span 3 Deck: LONGITUDINAL AND TRANSVERSE CRACKS UP TO 1/16" WIDE X UP TO FULL WIDTH AND LENGTH SCATTERED THROUGHOUT SPAN ON TOP OF DECK

Span 3 Beam 4: CORROSION ON THE BOTTOM FLANGE FOR THE FULL LENGTH OF THE GIRDER, NO MEASUREABLE SECTION LOSS, SIMILAR ON THE OUTSIDE FACE OF THE WEB UP TO FULL HEIGHT, FULL LENGTH OF SPAN

Span 3 Expansion Joint at Bent 2: ADHESION LOSS UP TO FULL DEPTH FOR 2 FT LONG IN THE RIGHT LANE AT THE GUTTER LINE

Span 2 Deck: TOP OF DECK HAS A 2.5 FT X 1.5 FT SOUND CONCRETE PATCH IN THE RIGHT LANE AT BENT 2

Span 1 Left Bridge Rail: THE LEFT RAIL HAS MINOR SCRAPE DAMAGE, WITH 2" X 2" TEARS IN THE STEEL FOR THE FULL LENGTH. GUARDRAIL CONTINUES TO FUNCTION.

Approach 1 : THE EAST APPROACH WEARING SURFACE AND APPROACH SLAB ARE PATCHED IN THE RIGHT LANE. PATCHES ARE IN GOOD CONDITION UP TO 4 FT X 6 FT

Approach 1 : TWO DELAMINATIONS IN THE LEFT LANE AT EDGE OF APPROACH ROADWAY UP TO 18"' X 24".

WEST APPROACH ROADWAY NEAR THE CENTER OF TRAVEL LANES HAS A SOUND ASPHALT PATCH, 20 FT X 20 FT.

Span 1 Deck: SOUND PATCHES UP TO 3.5FT WIDE X 4 FT LONG SCATTERED ALONG THE FULL LENGTH IN THE IN THE RIGHT LANE.

Span 1 Deck: SOUND PATCHES UP TO 3.5FT WIDE X 4 FT LONG SCATTERED ALONG THE FULL LENGTH IN THE IN THE RIGHT LANE.

Span 1 Deck: TWO DELAMINATIONS, UP TO 2 FT X 1 FT IN UNDERSIDE OF RIGHT OVERHANG NEAR BENT 1

Span 1 Deck: HAIRLINE MAP CRACKING WITH EFFLORESCENCE SCATTERED THROUGHOUT UNDERSIDE OF SPAN

Span 1 Deck: 2 AREAS OF EXPOSED REBAR, 6" X 1" IN UNDERSIDE OF RIGHT OVERHANG NEAR END BENT 1, NO SECTION LOSS

Span 1 Expansion Joint at End Bent 1: SPAN 1 JOINT HEADERS ARE DELAMINATED FOR 3 FT LONG X FULL WIDTH WITH CRACKING UP TO 1" WIDE NEAR THE CENTERLINE.

Approach 2 : THE EAST APPROACH WEARING SURFACE AND APPROACH SLAB ARE PATCHED IN THE RIGHT LANE. PATCHES ARE IN GOOD CONDITION, UP TO 12 FT X 6 FT

Span 3 Expansion Joint at End Bent 2: APPROACH SLAB HEADER HAS A SOUND PATCH, 16" X 24", AT THE CENTERLINE OF THE ROADWAY.

Bent 2 Cap 1: DELAMINATION, 12" X 6" ON WEST FACE OF CAP BELOW BAY 3

Bent 2 Cap 1: DELAMINATION, 15" X 8" ON UNDERSIDE OF CAP ADJACENT TO COLUMN 1 IN LEFT OVERHANG.

Bent 2 Cap 1: UNSOUND PATCH, 2.5 FT X 1.5 FT ON UNDERSIDE OF CAP UNDER BAY 2 WITH CRACKING UP TO 1/16" WIDE THROUGHOUT

Bent 2 Cap 1: EXPOSED REBAR, 6" X 1" ON NORTH END OF CAP, NO SECTION LOSS

Bent 1 Cap 1: DELAMINATION, 12" DIAMETER ON SOUTH END OF CAP WITH CRACKING UP TO 1/16" WIDE AND THE FULL HEIGHT AND WIDTH OF CAP

Bent 1 Cap 1: 2 SOUND PATCHES ON THE EAST FACE UNDER BEAM 1, 5.5 FT X 2.5 FT

Bent 1 Cap 1: SOUND PATCH ON WEST FACE UNDER GIRDER 2, 6 FT X 2 FT; SIMILAR SOUND PATCHES UP TC 3 FT X 3 FT SCATTERED THROUGHOUT THE FACES OF THE CAP

Bent 1 Pile 2: SOUND PATCH ON SOUTH FACE NEAR GROUND LINE, 4 FT HIGH X FULL WIDTH

Span 3 Beam 2: CORROSION ON BOTTOM FLANGE FOR FULL LENGTH OF BEAM, NO MEASUREABLE SECTION LOSS

Span 2 Beam 2: CORROSION ON BOTTOM FLANGE FOR FULL LENGTH OF BEAM, NO MEASUREABLE SECTION LOSS

Span 2 Beam 2: BENT 2 BAY 2 DIAPHRAGM UNDERSIDE HAS A 3 FT LONG X FULL WIDTH UNSOUND, DELAMINATED PATCH WITH A FULL WIDTH X 1/8" WIDE HORIZONTAL CRACK.

Span 2 Beam 4: CORROSION ON BOTTOM FLANGE SCATTERED THROUGHOUT SPAN, NO MEASUREABLE SECTION LOSS

Span 3 Beam 4: CORROSION ON THE BOTTOM FLANGE FOR THE FULL LENGTH OF THE GIRDER, NO MEASUREABLE SECTION LOSS, SIMILAR ON THE OUTSIDE FACE OF THE WEB UP TO FULL HEIGHT, FULL LENGTH OF SPAN

Span 3 Beam 4: BENT 2 DIAPHRAGM OUTSIDE OF GIRDER 4 IN THE WEST FACE HAS A FULL HEIGHT VERTICAL CRACK UP TO 1/16" WIDE

Span 1 Beam 1: FRECKLED RUST ON LOWER 8" OF WEB ON OUTSIDE FACE FOR FULL LENGTH OF GIRDER, NO MEASUREABLE SECTION LOSS

Span 2 Beam 4: CORROSION ON BOTTOM FLANGE AND LOWER 3" OF THE WEB SCATTERED THROUGHOUT SPAN, NO MEASUREABLE SECTION LOSS

Span 1 Beam 1: CORROSION, NO MEASURABLE SECTION LOSS, IN THE BOTTOM FLANGE AND LOWER 6" OF THE WEB BEHIND THE BEARING STIFFENER AT BENT 1 FOR 1 FT LONG.

Span 2 Beam 4: SURFACE CORROSION UP TO THE FULL HEIGHT OF THE WEB AND BEARING STIFFENER FOR 6 FT AT BENT 1

Bent 1 Cap 1: 14 FT X FULL WIDTH SOUND PATCH IN THE UNDERSIDE OF THE CAP BETWEEN COLUMNS 1 AND 2.

Bent 1 Cap 1: SOUND PATCH IN THE WEST FACE OF THE CAP UNDER BAY 3 UP TO FULL HEIGHT X 10 FT LONG.

Span 2 Beam 1: SPAN 2 BENT 1 BAY 1 DIAPHRAGM HAS A FULL WIDTH X FULL LENGTH SOUND PATCHES IN THE UNDERSIDE; SIMILAR AT SPAN 2.

Bent 1 Cap 1: 1 FT LONG X 1 FT WIDE X 5" TALL SOUND PATCH IN THE TOP OF THE CAP BELOW GIRDER 2.

Bent 2 Cap 1: 8 FT X 3 FT SOUND PATCH IN THE WEST FACE OF THE CAP BELOW GIRDER 2

Bent 2 Cap 1: FULL HEIGHT X 1 FT LONG SOUND PATCH IN THE END OF THE WEST FACE

Structure Data Worksheet

Span Profile

County: **HAYWOOD** Structure Number: **430248**

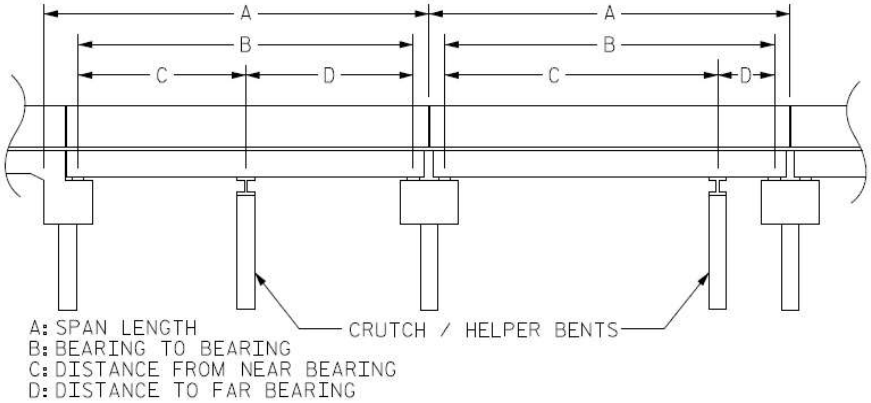

Span Number	Span Length	Bearing to Bearing	Crutch/ Helper Bent	Distance to Near Bearing	Distance to Far Bearing
1	52.094	49.667			
2	60.505	59.500			
3	61.047	58.750			

Structure Number: 430248 Span: 2 Route Name: SR 1613

VERTICAL CLEARANCE IN SPAN 2 LOOKING SOUTH

Route Number: 31016130	**Route Name:** SR 1613			**Reference Feature:** H
Minimum Vertical Clearance 14.833 feet	**Maximum Minimum Vertical Clearance** 15.517 feet			
Total Horizontal Clearance 49.700 feet	**Lateral Clearances: Left:** 12.200 feet **Right** 12.500 feet			
☐ **Base Highway Network**	**LRS Inventory Route, Sub Route Number**			
Milepost: 0.000	**Number of Lanes:** 2	**ADT:** 2600	**Year of ADT:** 2016	**Percentage of Trucks:** 7
☐ **National Highway System**			☐ **STRAHNET Highway Designator**	
Functional Classification 19 Local Other			**Direction of Traffic:** 2 2 - way traffic	

LOOKING EAST

WEST APPROACH LOOKING WEST

SOUTHWEST GUARDRAIL POST SPACING (TYPICAL)

SOUTHWEST GUARDRAIL TRANSITION (TYPICAL)

LEFT BARRIER RAIL (RIGHT SIMILAR)

SOUTHWEST GUARDRAIL ATTACHMENT (TYPICAL)

APPROACH SLAB 1

JOINT AT END BENT 1 (JOINT AT END BENT 2 SIMILAR)

CONCRETE DECK, SPAN 1 (TYPICAL)

SOUTH PROFILE

JOINT AT BENT 1 (BENT 2 SIMILAR)

LOOKING SOUTH

LOOKING NORTH

EAST APPROACH LOOKING EAST

NORTH PROFILE

APPROACH SLAB 2

LOOKING WEST

VERTICAL CLEARANCE IN SPAN 2 LOOKING SOUTH

VERTICAL CLEARANCE IN SPAN 2 LOOKING SOUTH

SOUTHWEST WINGWALL (TYPICAL)

TYPICAL END BENT BEARING

END BENT 1 (END BENT 2 SIMILAR)

TYPICAL INTERMEDIATE DIAPHRAGM

UNDERSIDE OF SUPERSTRUCTURE, SPAN 1 (TYPICAL)

BENT 2 (BENT 1 SIMILAR)

BENT 1 GIRDER 3 BEARING (TYPICAL)

BENT 2 SOUTH END OF CAP (TYPICAL)

BRIDGE INSPECTOR'S RECOMMENDATION FOR MAINTENANCE REPAIRS

Bridge: 430248 County HAYWOOD Date:

These Repairs Should Be Made Within Twelve Months From Date Of This Inspection

MMS Code	Description of Function	Unit	Quantity	Remarks	Est. Cost
3350	Maint R C Wings and Walls	SF	2	SPALL IN SOUTHEAST WINGWALL, 15" x 8" x 5" WITH NO EXPOSED REBAR WITH BACKFILL SPILLING THROUGH, PAR	

Key

Priority Maintenance Item Critical Finding Item Priority Maintenance Level Not Determined

BRIDGE INSPECTOR'S RECOMMENDATION FOR PRIORITY MAINTENANCE REPAIRS

Bridge: 430248 County HAYWOOD

THE FOLLOWING MAINTENANCE ITEMS HAVE BEEN SUBMITTED IN CONJUNCTION WITH A PRIORITY MAINTENANCE REQUEST

MMS Code	MMS Description	Quantity
3350	Maint R C Wings and Walls	2 SF

Location:
Bent/Span No.

Priority Level	Status
Recommended	Routine Maintenance

Submitted Date:	Submitted By:	Assisted By:
02/12/2021	JEREMY KEENE	

Details
SPALL IN SOUTHEAST WINGWALL, 15" x 8" x 5" WITH NO EXPOSED REBAR WITH BACKFILL SPILLING THROUGH, PAR

Bridge Inspection Field Sketch

Deck Width/Out to Out	31.417ft	Wearing Surface	
Between Rails	28.000ft	Median Width	
Curb Height	0.750ft	Median Height	
Top Rail to Deck/Wearing Surface	2.667ft	Left Guardrail Width	
Clear Roadway	28.000ft	Right Guardrail Width	
Left Bridge Rail	Type 33	Right Bridge Rail	Type 33

Measurements for Span #	1	SPANS 2 AND 3 SIMILAR	
Deck Thickness	0.750	Left Overhang	3.667
Top of Rail to Bottom of Beam	8.083	Right Overhang	3.667

Beam No	Beam Type	Spacing
1 thru 4	Steel I Beam	8.000ft

BEAMS
(NON-TAPERED FLANGES)

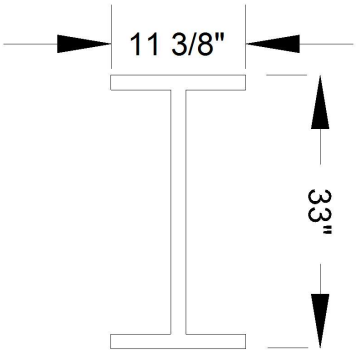

1/2" COVER PLATES LOCATED ON TOP AND BOTTOM OF BOTTOM FLANGE

TOP PLATES = 3" X 1/2" BEGIN 7 FT FROM EB1
BOT PLATE = 10" X 1/2" BEGIN 13 FT FROM EB1

FLANGES = 7/8"
WEB = 5/8"

VERIFIED BY JEK ON 2/12/2021

Title	Description
Typical Section	Data Worksheet

Bridge No:	Drawn By:	Date:	File Name:
430248	Roy W. Shook	07/29/2005	S0106000222

Bridge Inspection Field Sketch

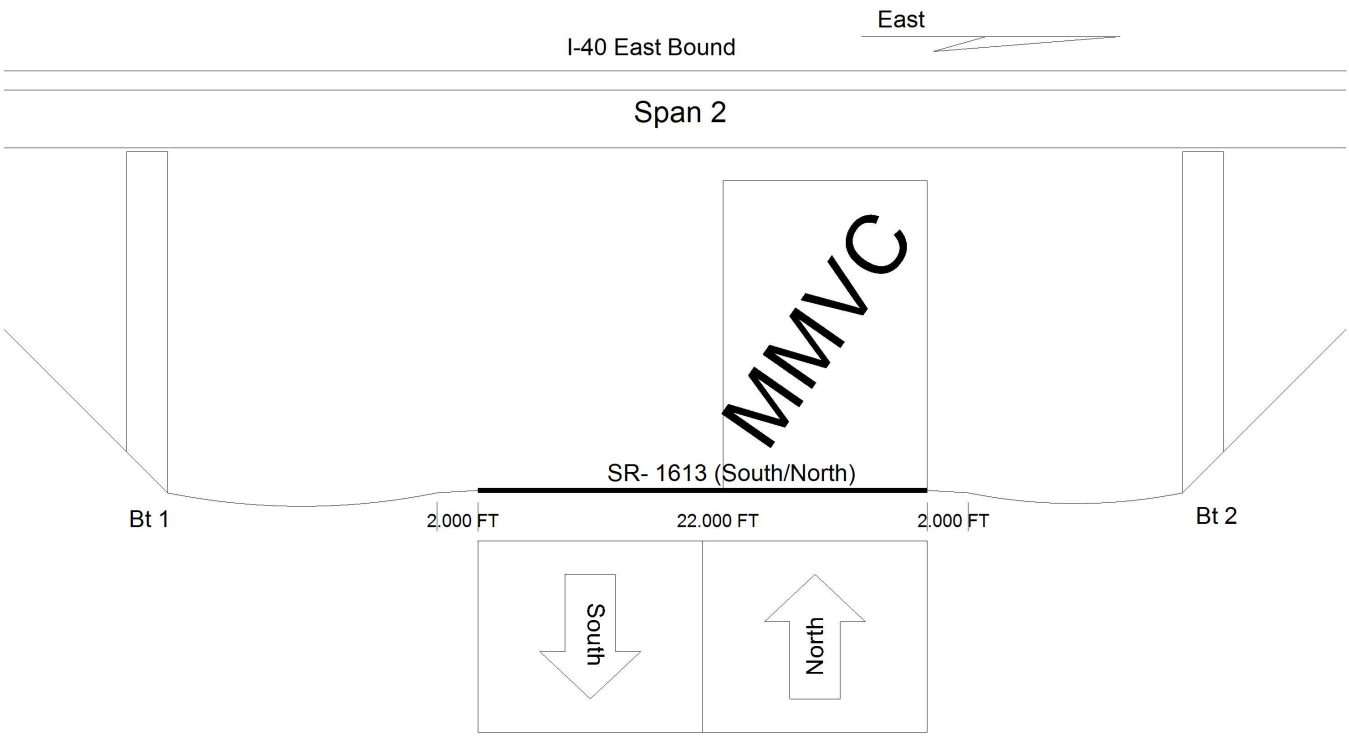

Roadway 1		Direction of Traffic	North South
Distance to Left Rail		Distance to Right Rail	
Distance to Left Toe of Slope	15.200FT	Distance to Left Bent	15.200FT
Distance to Right Toe of Slope	12.500FT	Distance to Right Bent	12.500FT
MMVC	15.517 Ft at Beam 4, 10.000 FT from Right Edge of Roadway		
MVC	14.833 Ft at Beam 4, 0.100 FT from Left Edge of Roadway		

VERIFIED BY JEK ON 2/12/2021

Title	**Description**
Underclearance	Data Worksheet

Bridge No: 430248	**Drawn By:** Roy W. Shook	**Date:** 07/29/2005	**File Name:** S0106000223

Bridge Inspection Field Sketch

Roadway	24.000ft Wide	2 Paved Lanes	Looking East
Left Shoulder	7.000ft Wide	7.000ft Paved	
Right Shoulder	10.100ft Wide	9.800ft Paved	0.300ft Unpaved
Left Guardrail	7.000ft from road		
Right Guardrail	10.100ft from road		

MEASUREMENTS TAKEN 50.000 FT FROM WEST APPROACH

VERIFIED ON BY JEK ON 2/12/2021

Title	**Description**
Approach Roadway	Data Worksheet

Bridge No: 430248	**Drawn By:** Roy W. Shook	**Date:** 07/29/2005	**File Name:** S0106000221

Bridge Inspection Field Sketch

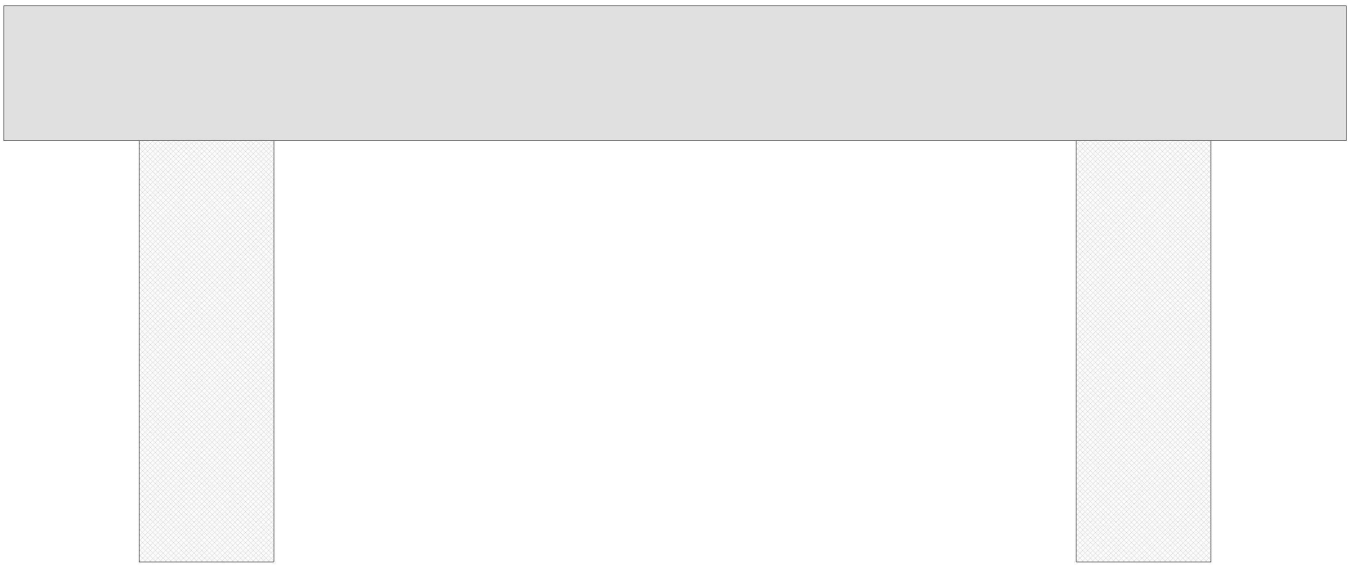

Cap Information			Material Cast-in-Place Concrete			
Length	Width	Height	Left Overhang	Right Overhang	Left Beam to End of Cap.	Right Beam to End of Cap.
29.833 ft.	3.000 ft.	3.000 ft.	4.500 ft.	4.500 ft.	1.833 ft.	1.833 ft.

Subcap Information			Material		
Length	Width	Height	Left Overhang	Right Overhang	Left Pile to Splice.

Sill Information			Material
Length	Width	Height	

Pile #	Material	Spacing	Width/Dia.	Height	Length	Orientation	Driven?	Replacement?	Removed?	Collar?
1	Concrete	20.833 ft.	3.000 ft.	3.000 ft.		Vertical	No	No	No	No
2	Concrete		3.000 ft.	3.000 ft.		Vertical	No	No	No	No

VERIFIED BY JEK ON 2/12/2021

Bent/Abutment #: 1 Similar Bents: 2

Title	Description
INTERIOR BENTS	SUBSTRUCTURE DETAILS

Bridge No:	Drawn By:	Date:	File Name:
430248	JOE C. HUNTSINGER	4/22/2013	S0106001610

Bridge Inspection Field Sketch

DIAPHRAGM DETAILS

LOCATED AT THE 1/3 POINTS OF ALL SPANS

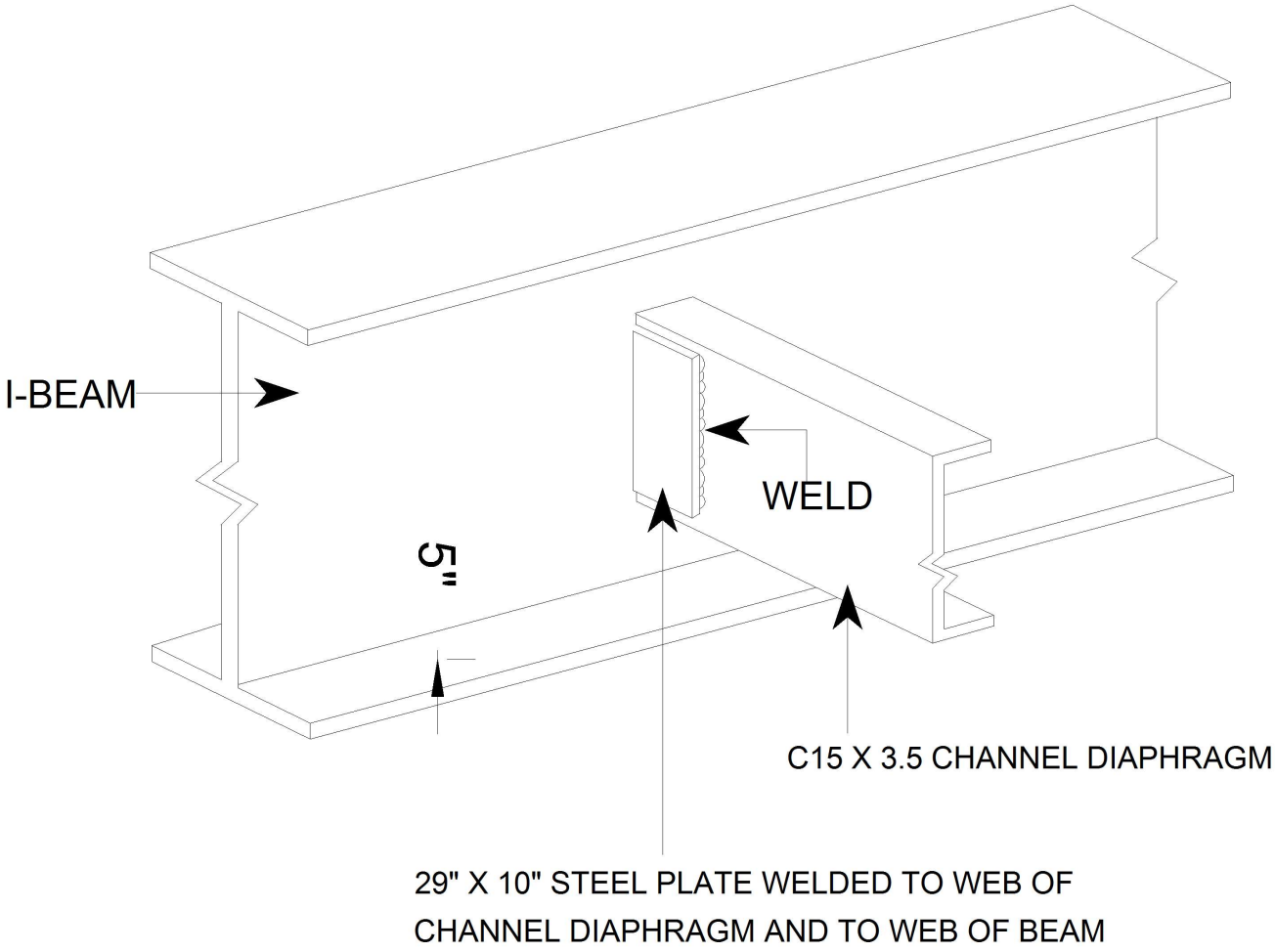

VERIFIED BY JEK ON 2/12/2021

Title	Description
INTERMEDIATE DIAPHRAGMS	SUPERSTRUCTURE DETAILS

Bridge No:	Drawn By:	Date:	File Name:
430248	JOE C. HUNTSINGER	4/22/2013	S0106001613