STATE OF NORTH CAROLINA
DEPARTMENT OF TRANSPORTATION

PAT L. MCCRORY
GOVERNOR

ANTHONY J. TATA
SECRETARY

June 19, 2013

U.S. Army Corps of Engineers
Regulatory Field Office
2407 West 5th Street
Washington, NC 27889

Attention: Mr. Tom Steffens
NCDOT Coordinator

Dear Sir:

Subject: **Application for Section 404 Nationwide Permit (NWP) 23, Section 401 Water Quality Certification and Tar-Pamlico Buffer Authorization** for the construction of a new rest area along US 17 near Chocowinity in Beaufort County; TIP Project K-3800; Federal Project No. NHS-17(32); Debit $240 from WBS No. 38748.1.1.

Please find enclosed PCN, permit drawings, buffer drawings, stormwater management plan, roadway plans and US 17 Rest Area Onsite Stream and Buffer Mitigation Plan for the above referenced project proposed by the North Carolina Department of Transportation (NCDOT). A Categorical Exclusion (CE) was completed for this project on January 8, 2009 and distributed shortly thereafter. Additional copies are available upon request. The NCDOT proposes to construct a new rest area along US 17 in Beaufort County. The project is located on the east side of US 17, just north of the SR 1150 (Harding Road) intersection, near Chocowinity, North Carolina. The proposed rest area will be accessed via SR 1150.

The developed site area is approximately 8.5 acres, and will provide parking for approximately 17 trucks and 61 cars. The proposed access roadways and parking areas utilize a curb and gutter section throughout. The site contains no wetlands and no perennial streams.

There is one intermittent jurisdictional stream that originates 50 feet downstream of the existing pipe culvert on Harding Road. Site work will involve 269 feet of permanent impacts to stream channels, and 60 feet of temporary impacts. Impacts to riparian buffers total 12,021 sq. ft. of allowable impacts to Zone 1, 7,766 sq. ft. of allowable Zone 2 impacts, and 961 sq. ft. of mitigable Zone 2 impacts. There are no expected impacts to streams or buffers due to utilities. The attached Stormwater Management Plan details attempts to minimize streams and buffers, and a summary of the on-site mitigation plan.

MAILING ADDRESS:
NC DEPARTMENT OF TRANSPORTATION
PROJECT DEVELOPMENT & ENVIRONMENTAL ANALYSIS UNIT
1598 MAIL SERVICE CENTER
RALEIGH NC 27699-1548

TELEPHONE: 919-707-6000
FAX: 919-212-5785

WEBSITE:NCDOT.GOV

LOCATION:
CENTURY CENTER, BUILDING B
1020 BIRCH RIDGE DRIVE
RALEIGH NC 27610

This project calls for a letting date of January 21, 2014 and a review date of December 3, 2013; however, the let date may advance as additional funding becomes available.

Regulatory Approvals

Section 404 Permit: All aspects of this project are being processed by the Federal Highway Administration as a "Categorical Exclusion" in accordance with 23 CFR 771.115(b). The NCDOT requests that the project be authorized by NWP 23.

Section 401 Certification: We anticipate 401 General Certification number 3891 will apply to this project. NCDOT is requesting written concurrence from the North Carolina Department of Environmental and Natural Resources, Division of Water Quality for compliance with Section 401.

Tar-Pamlico Riparian Buffer Authorization: This project is located in the Tar-Pamlico river basin and is subject to the buffer rules for this basin. NCDOT is requesting written concurrence from the North Carolina Department of Environmental and Natural Resources, Division of Water Quality for compliance with Tar-Pamlico Riparian Buffer Rules.

A copy of this permit application and its distribution list will be posted on the NCDOT website at https://connect.ncdot.gov/resources/Environmental/Pages/default.aspx

If you have any questions or need additional information, please contact Gordon Cashin at (919) 707-6107.

Sincerely,

E. L. Lusk

for Gregory J. Thorpe, Ph.D., Manager
Project Development and Environmental Analysis Unit

cc

NCDOT Permit Application Standard Distribution List.

Office Use Only:
Corps action ID no. _____
DWQ project no. _____
Form Version 1.3 Dec 10 2008

Pre-Construction Notification (PCN) Form

A. Applicant Information

1. Processing

1a. Type(s) of approval sought from the Corps:	☒ Section 404 Permit ☐ Section 10 Permit	
1b. Specify Nationwide Permit (NWP) number: 23	or General Permit (GP) number:	
1c. Has the NWP or GP number been verified by the Corps?	☐ Yes	☒ No
1d. Type(s) of approval sought from the DWQ (check all that apply): ☒ 401 Water Quality Certification – Regular ☐ Non-404 Jurisdictional General Permit ☐ 401 Water Quality Certification – Express ☐ Riparian Buffer Authorization		
1e. Is this notification solely for the record because written approval is not required?	For the record only for DWQ 401 Certification: ☐ Yes ☒ No	For the record only for Corps Permit: ☒ Yes ☐ No
1f. Is payment into a mitigation bank or in-lieu fee program proposed for mitigation of impacts? If so, attach the acceptance letter from mitigation bank or in-lieu fee program.	☐ Yes	☒ No
1g. Is the project located in any of NC's twenty coastal counties? If yes, answer 1h below.	☒ Yes	☐ No
1h. Is the project located within a NC DCM Area of Environmental Concern (AEC)?	☐ Yes	☒ No

2. Project Information

2a. Name of project:	Construction of a rest area on US 17 south of Chocowinity
2b. County:	Beaufort
2c. Nearest municipality / town:	Chocowinity
2d. Subdivision name:	*not applicable*
2e. NCDOT only, T.I.P. or state project no:	K-3800

3. Owner Information

3a. Name(s) on Recorded Deed:	North Carolina Department of Transportation
3b. Deed Book and Page No.	*not applicable*
3c. Responsible Party (for LLC i f applicable):	*not applicable*
3d. Street address:	1598 Mail Service Center
3e. City, state, zip:	Raleigh, NC 27699-1598
3f. Telephone no.:	(919) 707-6107
3g. Fax no.:	(919) 250-4224
3h. Email address:	gcashin@ncdot.gov

4. Applicant Information (if different from owner)	
4a. Applicant is:	☐ Agent ☐ Other, specify:
4b. Name:	*not applicable*
4c. Business name (if applicable):	
4d. Street address:	
4e. City, state, zip:	
4f. Telephone no.:	
4g. Fax no.:	
4h. Email address:	
5. Agent/Consultant Information (if applicable)	
5a. Name:	*not applicable*
5b. Business name (if applicable):	
5c. Street address:	
5d. City, state, zip:	
5e. Telephone no.:	
5f. Fax no.:	
5g. Email address:	

B. Project Information and Prior Project History	
1. Property Identification	
1a. Property identification no. (tax PIN or parcel ID):	*not applicable*
1b. Site coordinates (in decimal degrees):	Latitude: 35.491005 (DD.DDDDDD) Longitude: -77.105913 (-DD.DDDDDD)
1c. Property size:	8.5 acres
2. Surface Waters	
2a. Name of nearest body of water (stream, river, etc.) to proposed project:	UT to Maple Branch
2b. Water Quality Classification of nearest receiving water:	C Sw NSW
2c. River basin:	Tar-Pamlico
3. Project Description	
3a. Describe the existing conditions on the site and the general land use in the vicinity of the project at the time of this application: The site consists of maintained roadsides and culitvated cropland.	
3b. List the total estimated acreage of all existing wetlands on the property: 0	
3c. List the total estimated linear feet of all existing streams (intermittent and perennial) on the property: ??	
3d. Explain the purpose of the proposed project: To construct a new rest area on US 17	
3e. Describe the overall project in detail, including the type of equipment to be used: A new rest area will be constructed on the east side of US 17, just north of SR 1150 (Harding Road). Standard construction equipment will be used, such as trucks, dozers, and graders.	
4. Jurisdictional Determinations	
4a. Have jurisdictional wetland or stream determinations by the Corps or State been requested or obtained for this property / project (including all prior phases) in the past? Comments:	☒ Yes ☐ No ☐ Unknown
4b. If the Corps made the jurisdictional determination, what type of determination was made?	☐ Preliminary ☐ Final
4c. If yes, who delineated the jurisdictional areas? Name (if known): Chris Underwood	Agency/Consultant Company: NCDOT Other:
4d. If yes, list the dates of the Corps jurisdictional determinations or State determinations and attach documentation. Garcy Ward of the NC Division of Water Quality determined on March 13, 2013 that the intermittent stream was subject to the riparian buffer rules.	
5. Project History	
5a. Have permits or certifications been requested or obtained for this project (including all prior phases) in the past?	☐ Yes ☒ No ☐ Unknown
5b. If yes, explain in detail according to "help file" instructions.	
6. Future Project Plans	
6a. Is this a phased project?	☐ Yes ☒ No
6b. If yes, explain.	

C. Proposed Impacts Inventory

1. Impacts Summary

1a. Which sections were completed below for your project (check all that apply):

☐ Wetlands ☒ Streams - tributaries ☒ Buffers

☐ Open Waters ☐ Pond Construction

2. Wetland Impacts

If there are wetland impacts proposed on the site, then complete this question for each wetland area impacted.

2a. Wetland impact number – Permanent (P) or Temporary (T)	2b. Type of impact	2c. Type of wetland (if known)	2d. Forested	2e. Type of jurisdiction (Corps - 404, 10 DWQ – non-404, other)	2f. Area of impact (acres)
Site 1 ☐ P ☐ T			☐ Yes ☐ No	☐ Corps ☐ DWQ	
Site 2 ☐ P ☐ T			☐ Yes ☐ No	☐ Corps ☐ DWQ	
Site 3 ☐ P ☐ T			☐ Yes ☐ No	☐ Corps ☐ DWQ	
				2g. **Total wetland impacts**	

2h. Comments:

3. Stream Impacts

If there are perennial or intermittent stream impacts (including temporary impacts) proposed on the site, then complete this question for all stream sites impacted.

3a. Stream impact number - Permanent (P) or Temporary (T)	3b. Type of impact	3c. Stream name	3d. Perennial (PER) or intermittent (INT)?	3e. Type of jurisdiction (Corps - 404, 10 DWQ – non-404, other)	3f. Average stream width (feet)	3g. Impact length (linear feet)
Site 1 ☒ P ☒ T	Perm. Temp.	UT to Maple Branch	☐ PER ☒ INT	☐ Corps ☒ DWQ		128 30
Site 2 ☒ P ☒ T	Perm. Temp.	UT to Maple Branch	☐ PER ☒ INT	☐ Corps ☒ DWQ		141 20
Site 3 ☐ P ☐ T			☐ PER ☐ INT	☐ Corps ☐ DWQ		
Site 4 ☐ P ☐ T			☐ PER ☐ INT	☐ Corps ☐ DWQ		
Site 5 ☐ P ☐ T			☐ PER ☐ INT	☐ Corps ☐ DWQ		
Site 6 ☐ P ☐ T			☐ PER ☐ INT	☐ Corps ☐ DWQ		
					3h. **Total stream and tributary impacts**	269 Perm 60 Temp

3i. Comments:

4. Open Water Impacts

If there are proposed impacts to lakes, ponds, estuaries, tributaries, sounds, the Atlantic Ocean, or any other open water of the U.S. then individually list all open water impacts below.

4a. Open water impact number – Permanent (P) or Temporary (T)	4b. Name of waterbody (if applicable)	4c. Type of impact	4d. Waterbody type	4e. Area of impact (acres)
O1 ☐ P ☐ T				
O2 ☐ P ☐ T				
O3 ☐ P ☐ T				
O4 ☐ P ☐ T				
			4f. Total open water impacts	

4g. Comments:

5. Pond or Lake Construction

If pond or lake construction proposed, then complete the chart below.

5a. Pond ID number	5b. Proposed use or purpose of pond	5c. Wetland Impacts (acres)			5d. Stream Impacts (feet)			5e. Upland (acres)
		Flooded	Filled	Excavated	Flooded	Filled	Excavated	Flooded
P1								
P2								
	5f. Total							

5g. Comments:

5h. Is a dam high hazard permit required?	☐ Yes ☐ No If yes, permit ID no:
5i. Expected pond surface area (acres):	
5j. Size of pond watershed (acres):	
5k. Method of construction:	

6. Buffer Impacts (for DWQ)

If project will impact a protected riparian buffer, then complete the chart below. If yes, then individually list all buffer impacts below. If any impacts require mitigation, then you **MUST** fill out Section D of this form.

6a. Project is in which protected basin?			☐ Neuse ☐ Catawba	☒ Tar-Pamlico ☐ Randleman	☐ Other:
6b. Buffer impact number – Permanent (P) or Temporary (T)	6c. Reason for impact	6d. Stream name	6e. Buffer mitigation required?	6f. Zone 1 impact (square feet)	6g. Zone 2 impact (square feet)
B1 ☒ P ☐ T	60" RCP	UT to Maple Branch	☐ Yes ☒ No	5304	3462
B2 ☒ P ☐ T	60" RCP	UT to Maple Branch	☐ Yes ☒ No	6717	4304
B3 ☒ P ☐ T	Roadway Fill	UT to Maple Branch	☒ Yes ☐ No		961
			6h. **Total buffer impacts**	12021	8727

6i. Comments:

D. Impact Justification and Mitigation

1. Avoidance and Minimization

1a. Specifically describe measures taken to avoid or minimize the proposed impacts in designing project.

The site was chosen from six alternatives due to the minimal environmental impacts. Multiple design changes were implemented to avoid buffer zone 1 and minimize buffer zone 2 impacts. The entire building site, truck and car parking areas were moved westward away from the jurisdictional stream. The rest area entrance was also shifted eastward along Harding Road and away from the stream so that the access road paralleled the stream, avoided buffer zone 1 and minimized buffer zone 2 impacts. The roadway horizontal radii of the -L- and –Y2- lines were also adjusted to minimize stream crossing impacts.

1b. Specifically describe measures taken to avoid or minimize the proposed impacts through construction techniques.

See detailed stormwater management plan.

2. Compensatory Mitigation for Impacts to Waters of the U.S. or Waters of the State

2a. Does the project require Compensatory Mitigation for impacts to Waters of the U.S. or Waters of the State?	☒ Yes ☐ No If no, explain: See detailed on-site mitigation plan.
2b. If yes, mitigation is required by (check all that apply):	☒ DWQ ☒ Corps
2c. If yes, which mitigat ion option will be used for this project?	☐ Mitigation bank ☐ Payment to in-lieu fee program ☒ Permittee Responsible Mitigation

3. Complete if Using a Mitigation Bank

3a. Name of Mitigation Bank: not applicable

3b. Credits Purchased (attach receipt and letter)	Type	Quantity

3c. Comments:

4. Complete if Making a Payment to In-lieu Fee Program

4a. Approval letter from in-lieu fee program is attached.	☐ Yes
4b. Stream mitigation requested:	linear feet
4c. If using stream mitigation, stream temperature:	☐ warm ☐ cool ☐ cold
4d. Buffer mitigation requested (DWQ only):	square feet
4e. Riparian wetland mitigation requested:	acres
4f. Non-riparian wetland mitigation requested:	acres
4g. Coastal (tidal) wetland mitigation requested:	acres

4h. Comments:

5. Complete if Using a Permittee Responsible Mitigation Plan

5a. If using a permittee responsible mitigation plan, provide a description of the proposed mitigation plan.

6. Buffer Mitigation (State Regulated Riparian Buffer Rules) – required by DWQ	
6a. Will the project result in an impact within a protected riparian buffer that requires buffer mitigation?	☒ Yes ☐ No

6b. If yes, then identify the square feet of impact to each zone of the riparian buffer that requires mitigation. Calculate the amount of mitigation required.

Zone	6c. Reason for impact	6d. Total impact (square feet)	Multiplier	6e. Required mitigation (square feet)
Zone 1		0	3 (2 for Catawba)	
Zone 2	Roadway fill	961	1.5	1441.5
		6f. **Total buffer mitigation required:**		

6g. If buffer mitigation is required, discuss what type of mitigation is proposed (e.g., payment to private mitigation bank, permittee responsible riparian buffer restoration, payment into an approved in-lieu fee fund).

Permittee responsible riparian buffer restoration at the project site.

6h. Comments:

E. Stormwater Management and Diffuse Flow Plan (required by DWQ)	
1. Diffuse Flow Plan	
1a. Does the project include or is it adjacent to protected riparian buffers identified within one of the NC Riparian Buffer Protection Rules?	☒ Yes ☐ No
1b. If yes, then is a diffuse flow plan included? If not, explain why. Comments:	☒ Yes ☐ No
2. Stormwater Management Plan	
2a. What is the overall percent imperviousness of this project?	N/A
2b. Does this project require a Stormwater Management Plan?	☒ Yes ☐ No
2c. If this project DOES NOT require a Stormwater Management Plan, explain why:	
2d. If this project DOES require a Stormwater Management Plan, then provide a brief, narrative description of the plan: See attached permit drawings and stormwater management plan.	
2e. Who will be responsible for the review of the Stormwater Management Plan?	☐ Certified Local Government ☐ DWQ Stormwater Program ☒ DWQ 401 Unit
3. Certified Local Government Stormwater Review	
3a. In which local government's jurisdiction is this project?	not applicable
3b. Which of the following locally-implemented stormwater management programs apply (check all that apply):	☐ Phase II ☐ NSW ☐ USMP ☐ Water Supply Watershed ☐ Other:
3c. Has the approved Stormwater Management Plan with proof of approval been attached?	☐ Yes ☐ No
4. DWQ Stormwater Program Review	
4a. Which of the following state-implemented stormwater management programs apply (check all that apply):	☐ Coastal counties ☐ HQW ☐ ORW ☐ Session Law 2006-246 ☐ Other:
4b. Has the approved Stormwater Management Plan with proof of approval been attached?	☒ Yes ☐ No
5. DWQ 401 Unit Stormwater Review	
5a. Does the Stormwater Management Plan meet the appropriate requirements?	☐ Yes ☐ No N/A
5b. Have all of the 401 Unit submittal requirements been met?	☐ Yes ☐ No N/A

F. Supplementary Information		
1. Environmental Documentation (DWQ Requirement)		
1a. Does the project involve an expenditure of public (federal/state/local) funds or the use of public (federal/state) land?	☒ Yes	☐ No
1b. If you answered "yes" to the above, does the project require preparation of an environmental document pursuant to the requirements of the National or State (North Carolina) Environmental Policy Act (NEPA/SEPA)?	☒ Yes	☐ No
1c. If you answered "yes" to the above, has the document review been finalized by the State Clearing House? (If so, attach a copy of the NEPA or SEPA final approval letter.) Comments:	☒ Yes	☐ No
2. Violations (DWQ Requirement)		
2a. Is the site in violation of DWQ Wetland Rules (15A NCAC 2H .0500), Isolated Wetland Rules (15A NCAC 2H .1300), DWQ Surface Water or Wetland Standards, or Riparian Buffer Rules (15A NCAC 2B .0200)?	☐ Yes	☒ No
2b. Is this an after-the-fact permit application?	☐ Yes	☒ No
2c. If you answered "yes" to one or both of the above questions, provide an explanation of the violation(s):		
3. Cumulative Impacts (DWQ Requirement)		
3a. Will this project (based on past and reasonably anticipated future impacts) result in additional development, which could impact nearby downstream water quality?	☐ Yes ☒ No	
3b. If you answered "yes" to the above, submit a qualitative or quantitative cumulative impact analysis in accordance with the most recent DWQ policy. If you answered "no," provide a short narrative description. Due to the minimal transportation impact resulting from construction of this rest area, this project will neither influence nearby land uses nor stimulate growth. Therefore, a detailed indirect or cumulative effects study will not be necessary.		
4. Sewage Disposal (DWQ Requirement)		
4a. Clearly detail the ultimate treatment methods and disposition (non-discharge or discharge) of wastewater generated from the proposed project, or available capacity of the subject facility. not applicable		

5. Endangered Species and Designated Critical Habitat (Corps Requirement)	
5a. Will this project occur in or near an area with federally protected species or habitat?	☒ Yes ☐ No
5b. Have you checked with the USFWS concerning Endangered Species Act impacts?	☐ Yes ☒ No
5c. If yes, ind icate the USFWS Field Office you have contacted.	☐ Raleigh ☐ Asheville
5d. What data sources did you use to determine whether your site would impact Endangered Species or Designated Critical Habitat? NCNHP, USFWS, field surveys	
6. Essential Fish Habitat (Corps Requirement)	
6a. Will this project occur in or near an area designated as essential fish habitat?	☐ Yes ☒ No
6b. What data sources did you use to determine whether your site would impact Essential Fish Habitat? NMFS County Index	
7. Historic or Prehistoric Cultural Resources (Corps Requirement)	
7a. Will this project occur in or near an area that the state, federal or tribal governments have designated as having historic or cultural preservation status (e.g., National Historic Trust designation or properties significant in North Carolina history and archaeology)?	☐ Yes ☒ No
7b. What data sources did you use to determine whether your site would impact historic or archeological resources? NEPA Documentation	
8. Flood Zone Designation (Corps Requirement)	
8a. Will this project occur in a FEMA-designated 100-year floodplain?	☒ Yes ☐ No
8b. If yes, explain how project meets FEMA requirements: NCDOT Hydraulics Unit coordination with FEMA	
8c. What source(s) did you use to make the floodplain determination? FEMA Maps	

Dr. Gregory J. Thorpe, Ph D Applicant/Agent's Printed Name	E. L. Luck Applicant/Agent's Signature (Agent's signature is valid only if an authorization letter from the applicant is provided.)	6·19·13 Date

US 17 Rest Area Onsite Stream and Buffer Mitigation Plan
Beaufort County
K-3800
WBS 38748.1.1

The proposed roadway project, K-3800, is to construct a new rest area along US 17 in Beaufort County. The project is located on the east side of US 17 at the intersection with Harding Road, south of Chocowinity. NCDOT proposes to provide onsite mitigation by restoring an estimated 815 feet of intermittent stream, preserving 623 feet of stream, and restoring 81,457.2 sq. feet of buffer on site. Mitigation is required for 269 feet of intermittent stream impact (1:1 ratio) and 961 sq. feet of Zone 2 buffer impact (1.5:1 ratio). This will leave approximately 546 feet of intermittent stream restoration, 623 feet of stream preservation, and 80,015.7 sq. feet of buffer mitigation assets available subject to agency approval.

Existing Conditions

The project site is approximately 20 acres and consists mainly of agricultural fields. The intermittent channel enters the southern end of the site through a culvert under Harding Road, flowing generally northward through the agricultural field for 1000 feet. The channel flows for 600 feet in a small wooded area before exiting the northern end of the site. A ditch carrying flow from US 17 enters the site from the west and flows directly into the channel 650 feet downstream of Harding Road.

The channel was determined to be jurisdictional approximately 50 feet downstream of the culvert under Harding Road. The channel is 1 – 2 feet wide at the base and highly incised. The channel has been straightened, dredged, and regularly mowed in the past for agricultural purposes.

The primary degrading factors of the channel are direct runoff from the agricultural field, mowing of the buffer, and dredging of the channel. Even though the channel is incised, the banks are not experiencing major erosion, most likely due to the heavy herbaceous growth, lack of flow in the channel and lack of direct impacts to the bank.

Proposed Conditions

NCDOT proposes to restore the intermittent channel to more natural conditions by removing the degrading factors on the site.

The proposed design removes the agricultural inputs into the channel and redirects flow away from the channel through a fore bay and stormwater retention system. The flow will exit the stormwater system over a berm and sheetflow through a vegetated buffer before entering the channel. The ditch carrying flow from US 17 will also be redirected into a 250 feet grassed swale before entering the channel.

Localized spots of erosion along the channel banks will be stabilized during construction. The banks will be planted on 4 foot centers with a mix of silky dogwood and buttonbush livestakes. The buffer areas on both sides of the channel will be planted on 20 foot centers with 3 to 5 gallon containerized trees from a mix of cherrybark oak, sycamore, green ash, and willow oak.

Monitoring and Success Criteria

NCDOT shall monitor the site by visual observation and photo points for survival and aerial cover of vegetation. NCDOT shall monitor the site for a minimum of three years or until the site is deemed successful. Monitoring will be initiated upon completion of the site planting.

Long term Management

The site will be removed from agricultural use and protected in perpetuity in its restored state. The site will be held by NCDOT and placed on the NES mitigation geodatabase. Once monitoring is completed and the site is closed out, it will be managed according to NCDOT's Stewardship process for long term maintenance and protection.

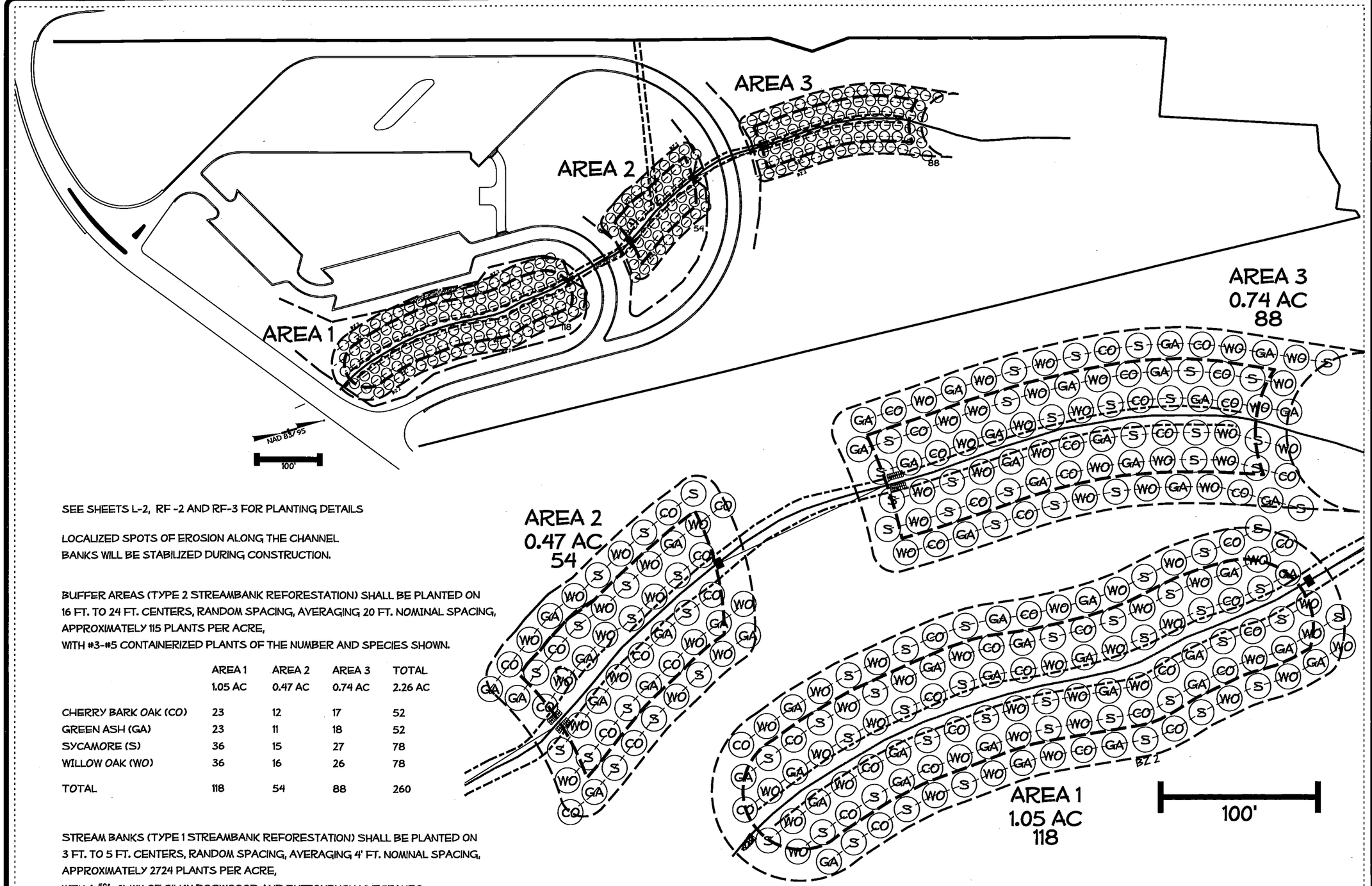

SEE SHEETS L-2, RF -2 AND RF-3 FOR PLANTING DETAILS

LOCALIZED SPOTS OF EROSION ALONG THE CHANNEL BANKS WILL BE STABILIZED DURING CONSTRUCTION.

BUFFER AREAS (TYPE 2 STREAMBANK REFORESTATION) SHALL BE PLANTED ON 16 FT. TO 24 FT. CENTERS, RANDOM SPACING, AVERAGING 20 FT. NOMINAL SPACING, APPROXIMATELY 115 PLANTS PER ACRE,
WITH #3-#5 CONTAINERIZED PLANTS OF THE NUMBER AND SPECIES SHOWN.

	AREA 1	AREA 2	AREA 3	TOTAL
	1.05 AC	0.47 AC	0.74 AC	2.26 AC
CHERRY BARK OAK (CO)	23	12	17	52
GREEN ASH (GA)	23	11	18	52
SYCAMORE (S)	36	15	27	78
WILLOW OAK (WO)	36	16	26	78
TOTAL	118	54	88	260

STREAM BANKS (TYPE 1 STREAMBANK REFORESTATION) SHALL BE PLANTED ON 3 FT. TO 5 FT. CENTERS, RANDOM SPACING, AVERAGING 4' FT. NOMINAL SPACING, APPROXIMATELY 2724 PLANTS PER ACRE,
WITH A 50/50 % MIX OF SILKY DOGWOOD AND BUTTONBUSH LIVESTAKES.

STATE W.B.S. # 38748.1.1
T.I.P. # K-3800
FED. PROJ. # NES-00-0000000

STATE OF NORTH CAROLINA DEPARTMENT OF TRANSPORTATION

LANDSCAPE DESIGN & DEVELOPMENT SECTION
NCDOT ROADSIDE ENVIRONMENTAL UNIT
1557 MAIL SERVICE CENTER
RALEIGH NC 27699 919-707-2920

PLAN : Stream Buffer Reforestation

PROJECT DESCRIPTION : US 17, Beaufort County, Rest Area

DESIGNED BY: dlw
DRAWN BY: dlw
DATE 05/28/13
SCALE as shown
SHEET # -
OF -

SYSTIME DGN
USERNAME

STORMWATER MANAGEMENT PLAN

Project: K-3800 (38748.1.1) March 28, 2013
County: Beaufort
Hydraulics Project Manager: John W. Twisdale, Jr., PE

ROADWAY DESCRIPTION

The project involves construction of a new rest area to be located in the northeast corner of the US 17 (Washington Bypass) and SR 1150 (Harding Rd) intersection. This site is south of Chocowinity in a mostly rural area of the county. Roadway improvements are proposed along Harding Rd and US 17. The purpose of the project is to provide public services to motorists traveling along US 17. The proposed access is along Harding Rd. The developed site area is approximately 8.5 acres. The facility provides parking for approximately 17 trucks and 61 cars. The proposed access roadways and parking areas utilize a curb and gutter section throughout. There are no major stream crossings.

ENVIRONMENTAL DESCRIPTION

The project is located in the Tar-Pamlico River Basin, in Beaufort County, which is also a CAMA county. This site was chosen from six alternatives, due to the minimal quantity of environmental impacts. There are no wetland impacts, 303d involvement, nor is this site within a critical water supply watershed. No significant adverse environmental effects are expected. A hazardous spill basin is proposed because this rest area has truck parking.

There is one intermittent jurisdictional stream (UT-1 to Maple Branch) that originates 50 ft downstream of the existing pipe culvert on Harding Rd. This stream requires protection of riparian buffers. There is also a non-jurisdictional ditch that outlets into UT-1 in the middle of this site. Preliminary approval has been granted to fill in this ditch and route offsite flows north and eastward, around the rest area perimeter drive.

STORMWATER CONTROLS

Structural and non-structural stormwater controls were implemented in this project to prevent or reduce stormwater pollution. The measures taken to reduce stormwater impacts are listed below. All stormwater discharged to the buffers is either diffuse flow or has been treated prior to entering the buffers.

ROADWAY DESIGN CHANGES:

Multiple design changes were implemented to avoid buffer zone 1 and minimize buffer zone 2 impacts. The entire building site, truck, and car parking areas were moved westward away from the jurisdictional stream. The entrance to the rest area was also shifted eastward along Harding Road and away from UT-1. This provides an access road that parallels the stream, avoids buffer zone 1 and minimizes buffer zone 2 impacts

of the existing ditch that currently outlets into UT-1. This allows outflow from the site to UT-1 without the need for a newly constructed outfall ditch. This grass swale is located from -Y2- Sta.16+96.4, 99.9' Lt. to -L- Sta. 20+01.4, 116.7' Rt. to -L- Sta. 20+66.0, 106.6' Rt. Other grass swales used to treat roadway runoff include:

-Y1- Sta. 11+00 Lt. to -L- Sta. 10+75 Lt.
-Y1- Sta. 15+33 Lt. to -Y1- Sta. 18+92 Lt.
-L- Sta. 21+00 Lt. to -L- Sta. 21+60 Lt.
-US 17- Sta. 202+00 to -Y1- Sta. 18+42 Rt.
-Y1- Sta. 18+63 to -Y1- Sta. 22+08 Rt.
-L- Sta. 20+80 Rt., L=35', (not 50', due to space constraints)
-L- Sta. 26+77 Rt., L=50'
-Y2- Sta. 18+20.6 Lt., L=50'

PREFORMED SCOUR HOLES:

Preformed scour holes were added as outlet devices to diffuse flow collected from parts of the site perimeter roadway. All are located outside Buffer Zone 1 & 2 as follows:

-L- Sta. 19+00 Rt. (Pretreatment in Hazardous Spill/Bioretention Basin)
-Y2- Sta. 16+27.7 Lt. (Pretreatment in Hazardous Spill/Bioretention Basin)
-L- Sta. 22+50 Lt.
-L- Sta. 23+84.84 Lt.

MISCELLANEOUS:

A series of four 3' long curb depressions or "curb cuts" are provided between -Y2- Sta. 10+78 and Sta. 12+18 Rt. to allow the southern parking area runoff to obtain grass shoulder and grass swale treatment along left side of -Y1- (Harding Road).

A cistern is proposed to collect the roof runoff from the main building. This stormwater will be reused to irrigate the grass areas around the main building.

ON-SITE MITIGATION:

NCDOT proposes to restore the intermittent stream, UT-1 to more natural conditions by removing the degrading factors on the site. The untreated runoff from the existing agricultural inputs will be removed from the stream. The ditch carrying the treated runoff from US 17 will also be redirected outside the perimeter drive through a ditch, then a 60' grass swale before entering UT-1.

Although this overall change in land use includes impervious pavement, all impervious areas obtain some type of treatment, via hazardous spill/bioretention basin/level spreader/ grass filter strip/grass swale arrangement, or by other treatment, including grass swales, grass shoulders, preformed scour holes or cistern irrigation.

Localized spots of erosion along the existing channel banks of UT-1 will be stabilized during construction by planting a mix of silky dogwood and buttonbush livestakes on 4

TIP PROJECT: K-3800

CONTRACT:

See Sheet 1-A For Index of Sheets
See Sheet 1-B For Conventional Symbols

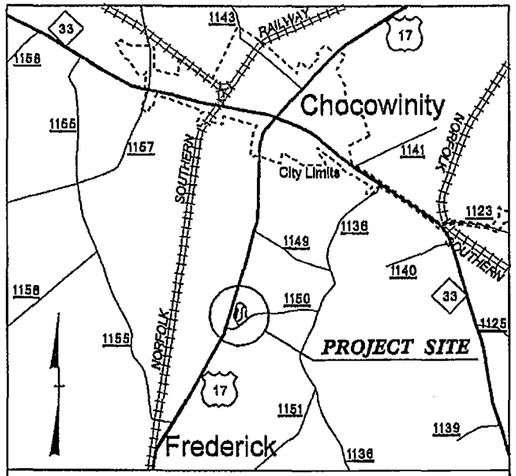

VICINITY MAP

STATE OF NORTH CAROLINA
DIVISION OF HIGHWAYS

BEAUFORT COUNTY

STATE	STATE PROJECT REFERENCE NO.	SHEET NO.	TOTAL SHEETS
N.C.	K-3800	1	

STATE PROJ. NO.	F.A. PROJ. NO.	DESCRIPTION
38748.1.1	NHS-17(32)	PE
38748.2.1	NHS-17(32)	ROW, UTIL

Permit Drawing
Sheet 1 of 10

WETLAND AND SURFACE WATER IMPACTS PERMIT

PERMIT DRAWING SHEET 1 OF 10

LOCATION: US 17 REST AREA

TYPE OF WORK: GRADING, PAVING, DRAINAGE, LIGHTING, REST AREA AND FACILITIES

WETLAND & STREAM IMPACTS

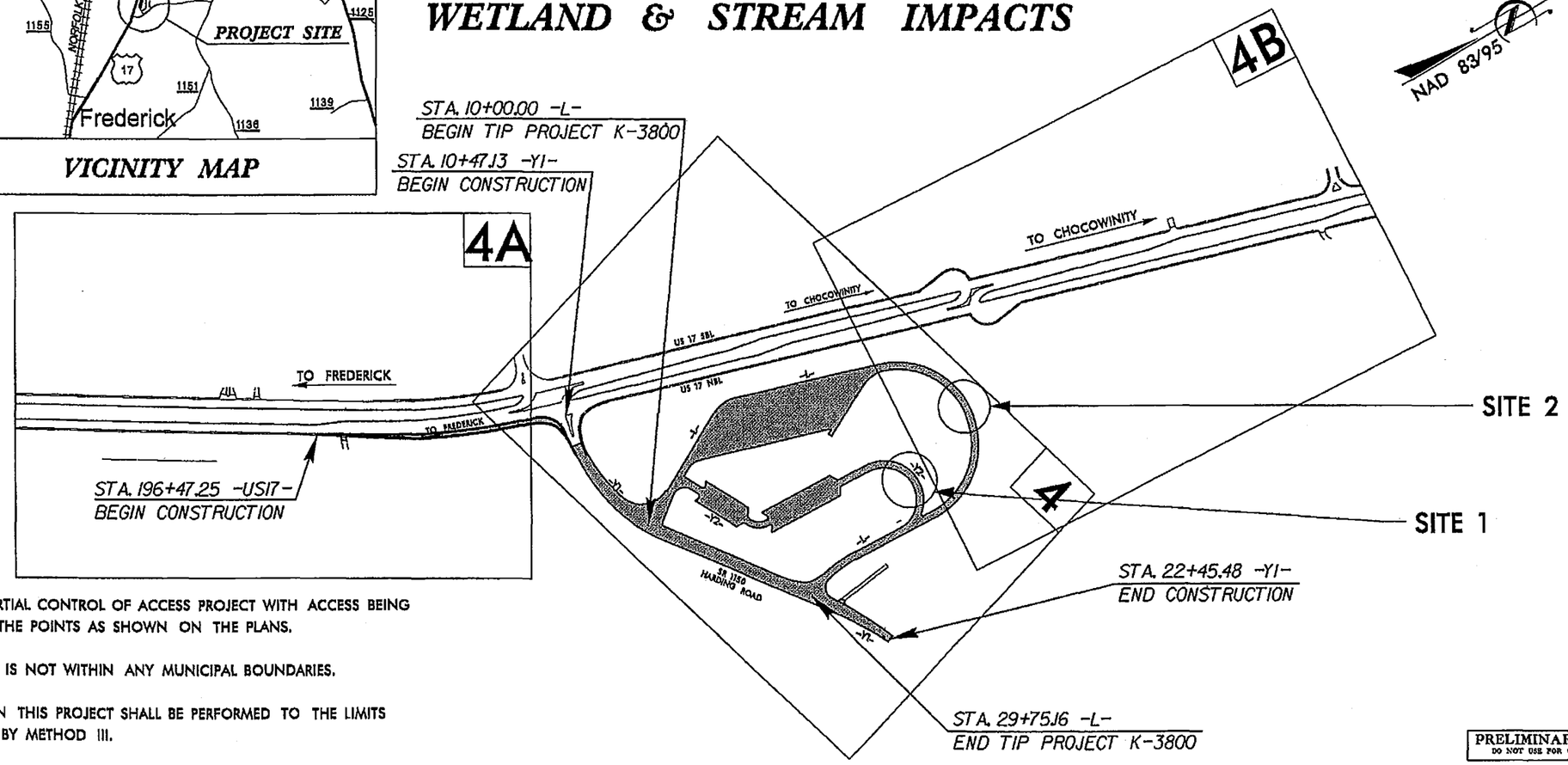

THIS IS A PARTIAL CONTROL OF ACCESS PROJECT WITH ACCESS BEING LIMITED TO THE POINTS AS SHOWN ON THE PLANS.

THIS PROJECT IS NOT WITHIN ANY MUNICIPAL BOUNDARIES.

CLEARING ON THIS PROJECT SHALL BE PERFORMED TO THE LIMITS ESTABLISHED BY METHOD III.

PRELIMINARY PLANS
DO NOT USE FOR CONSTRUCTION

GRAPHIC SCALES

50 25 0 50 100
PLANS

50 25 0 50 100
PROFILE (HORIZONTAL)

10 5 0 10 20
PROFILE (VERTICAL)

DESIGN DATA

ADT 2011 = 864
ADT 2031 = 1,352
DHV = N/A %
D = N/A%
T = 12 %
V = 20 MPH

PROJECT LENGTH

LENGTH ROADWAY TIP PROJECT K-3800 = 0.374 MILES
TOTAL LENGTH TIP PROJECT K-3800 = 0.374 MILES

Prepared in the Office of:
DIVISION OF HIGHWAYS
1000 Birch Ridge Dr., Raleigh NC, 27610

2012 STANDARD SPECIFICATIONS

RIGHT OF WAY DATE:
NOVEMBER 20, 2009

LETTING DATE:
JANUARY 21, 2014

G. E. BREW, PE
PROJECT ENGINEER

THAD F. DUNCAN, PE
PROJECT DESIGN ENGINEER

HYDRAULICS ENGINEER

SIGNATURE: P.E.

ROADWAY DESIGN ENGINEER

SIGNATURE: P.E.

DIVISION OF HIGHWAYS
STATE OF NORTH CAROLINA

STATE HIGHWAY DESIGN ENGINEER P.E.

09/06/99
4/9/2013
kmjohns
K:\Hydraulics\PERMITS_Environmental\Drawings\wetlandsstream pdg\k3800_hyd_wet_tsh.dgn
$$$$$$SYSTIME$$$$$
$$$$$$$$$$$$$$$$$$DGN$$$$$$$$$$$$$$$$$$$$
$$$$USERNAME$$$$

8/17/99

PROJECT REFERENCE NO.	SHEET NO.
K-3800	4
R/W SHEET NO.	
ROADWAY DESIGN ENGINEER	HYDRAULICS ENGINEER

Permit Drawing
Sheet 2 of 10
~~PRELIMINARY PLANS~~
DO NOT USE FOR CONSTRUCTION

WETLAND AND SURFACE WATER IMPACTS PERMIT

PERMIT DRAWING SHEET 2 OF 10

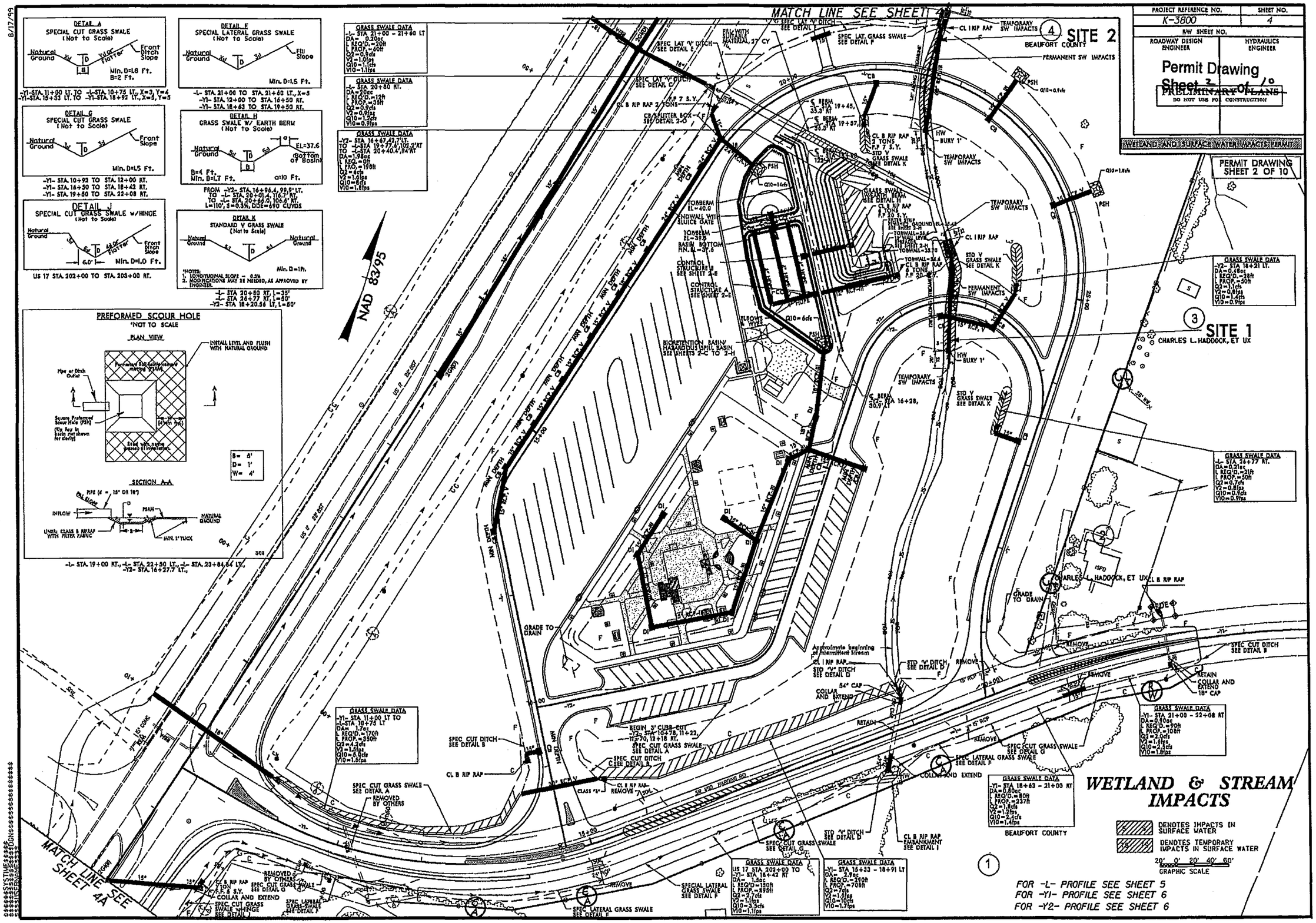

8/17/99

PROJECT REFERENCE NO.	SHEET NO.
K-3800	4
R/W SHEET NO.	
ROADWAY DESIGN ENGINEER	HYDRAULICS ENGINEER

Permit Drawing
Sheet 3 of 10

PRELIMINARY PLANS
DO NOT USE FOR CONSTRUCTION

WETLANDS AND SURFACE WATER IMPACTS PERMIT

PERMIT DRAWING SHEET 3 OF 10

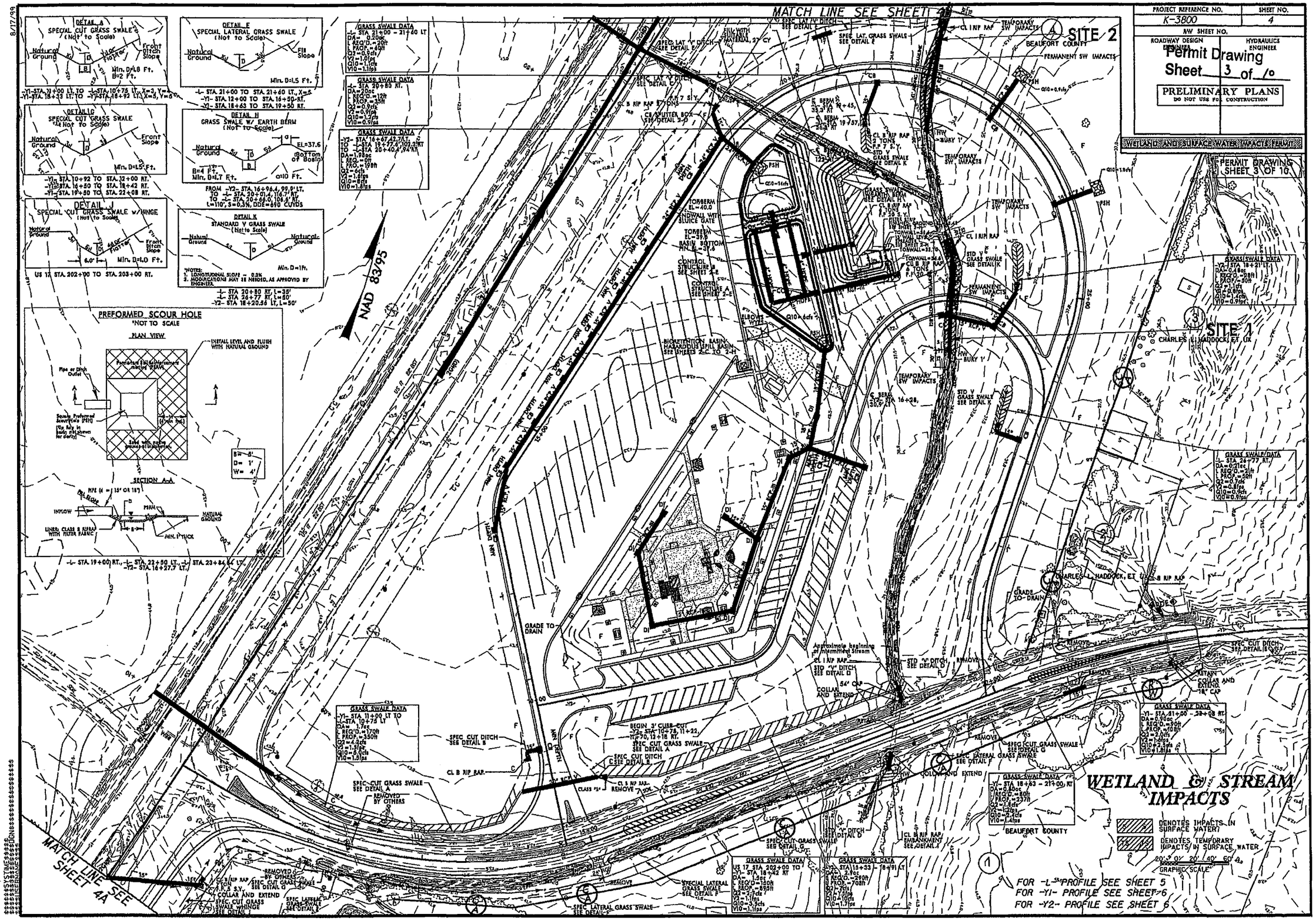

WETLAND AND SURFACE WATER IMPACTS PERMIT	PROJECT REFERENCE NO.	SHEET NO.
	K-3800	2-C
		PERMIT DRAWING SHEET 4 OF 10

MATERIALS

A	GEOTEXTILE FOR SUBSURFACE DRAINS, TYPE 1
B	24" RCP INLET PIPE
C	18" RCP EQUALIZER PIPE
D	12" RCP OUTFALL PIPE TO LEVEL SPREADER (SHT 2-H)
E	OUTLET CONTROL STRUCTURE A W/ SLUICE GATE (SHT 2-E)
F	OUTLET CONTROL BYPASS STRUCTURE B W/ SLUICE GATE (SHT 2-E)
G	24" RCP BYPASS OUTLET PIPE TO GRASS SWALE (SHT 2-F,DETAIL H)
H	TOP SOIL AND ½ CUT BERMUDA SOD
I	CLASS B RIP RAP
J	END WALL WITH 18" SLUICE GATE (STD 838.02)
K	4" UNDERDRAIN PERFORATED PIPE 3 @ 80', 20' SPACING WRAPPED IN FILTER FABRIC
L	CLEAN WASHED #57 STONE ENVELOPE (SHT 2-G, DETAIL A)
M	30mil IMPERVIOUS MEMBRANE LINER (SHT 2-G DETAIL A)
N	CLEAN SAND (SHT 2-G DETAIL A)

NOTES:
1. SEE PLAN SHEET #4 FOR SHAPE AND SIZE OF BASIN.
2. BOTTOM OF BIORETENTION BASIN SURFACE AREA AT EL 37.6 = 6,858 SF. SEE SHT 4 FOR H&B GRADING PLAN
3. ALL FILL MATERIAL SHALL BE COMPACTED AND TESTED IN ACCORDANCE WITH NCDOT STD SPEC 235.
4. INSTALL SOD ON BERM AND BASIN BOTTOM AND ANY EXPOSED SURFACE THAT NEEDS TO BE PROTECTED AGAINST IMMEDIATE POTENTIAL STORM EVENT.
5. THE SURVEYOR SHALL CREATE A DTM FILE SUITABLE TO VERIFY BASIN CAPACITY TO THE ENGINEER, INCLUDING VERIFICATION OF INVERTS AND ELEVATIONS AT THE FOLLOWING POINTS:
   - -CB SPLITTER BOX WEIR ELEVATION.
   - -ALL TOP OF DRAINAGE STRUCTURE AND PIPE INVERT ELEVATIONS.
   - -BOTTOM OF BASIN AREA, LOCATION AND ELEVATIONS.
   - -TOP OF BERM WIDTH, LOCATION AND ELEVATIONS.
6. THE BERM SHALL BE CONSTRUCTED WITH SUITABLE FILL MATERIAL PER THE ENGINEER.
7. PREFORMED SCOUR HOLE AND SPLITTER BOX REQUIRES REGULAR MAINTENANCE TO REMAIN EFFECTIVE.
8. INSTALL UNDERDRAIN CLEANOUTS, WYES, AND ELBOWS PER LOCATIONS ON SHT 4

Permit Drawing Sheet 4 of 10

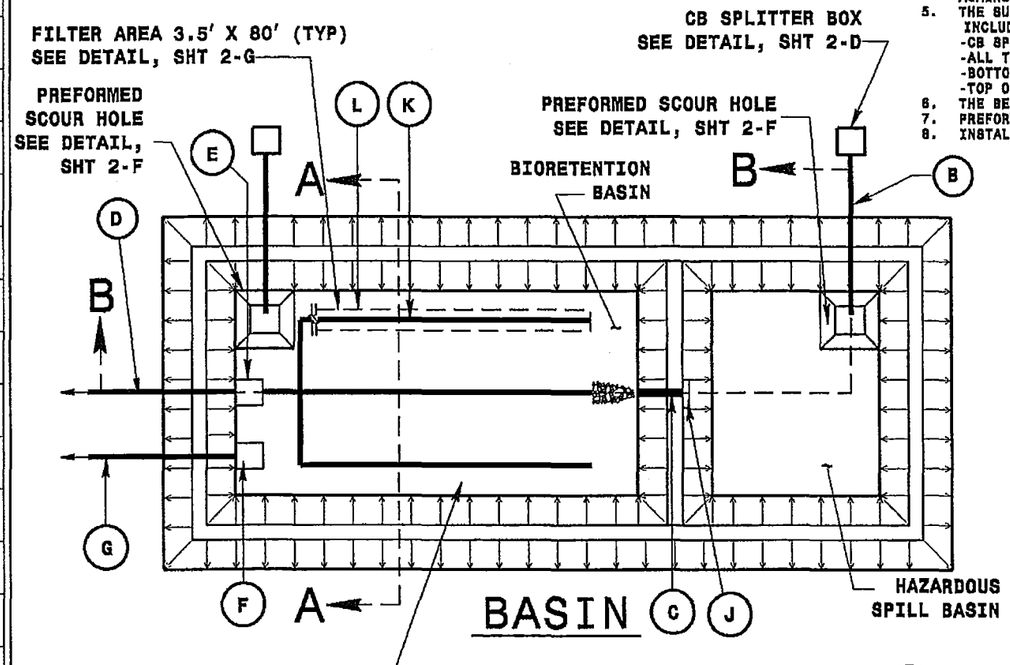

CONSTRUCTION SEQUENCE:

1. RELOCATE UTILITY LINES.
2. PUT IN ALL EROSION CONTROL MEASURES (AS NEEDED THROUGH CONSTRUCTION STAGES).
3. CONSTRUCT AND INSTALL BOXES, CREATE OPENINGS IN BOXES AND INSTALL PIPES.
4. EXCAVATE FOR THE BASIN AND PREPARE THE BASIN FLOOR AT THE GIVEN ELEVATION TO ALLOW FOR 4" SOIL AND BERMUDA SOD.
5. EXCAVATE AND CONSTRUCT PREFORMED SCOUR HOLE.
6. CONSTRUCT BERM AROUND BASIN.
7. INSTALL PREFORMED SCOUR HOLE RIP RAP.
8. LAY SOD.
9. ADD GRATES ON ALL BOXES.
10. TEMPORARILY BYPASS USAGE OF BASINS DURING CONSTRUCTION UNTIL VEGETATION IS ESTABLISHED AND CONSTRUCTION IS COMPLETE. (CAN BE OBTAINED BY BLOCKING PIPE IN SPLITTER BOX)

HAZARDOUS SPILL BIORETENTION BASIN

- -BIORETENTION BASIN FINISHED BOTTOM EL = 37.6
- -BASIN TOP OF BERM EL = 40.00
- -BASIN DIVIDER TOP OF BERM EL = 39.50
- -SPLITTER BOX WEIR EL = 40.93
- -DESIGN STORM = RUNOFF GENERATED BY FIRST 1.5" RAINFALL
- -DESIGN VOLUME = 13,191 CF
- -VOLUME PROVIDED = 13,242 CF
- -DOE = 725 CY
- -BERM FILL = 220 CY
- -UNDERDRAIN FILTER SURFACE AREA NOT TO EXCEED 840 SF

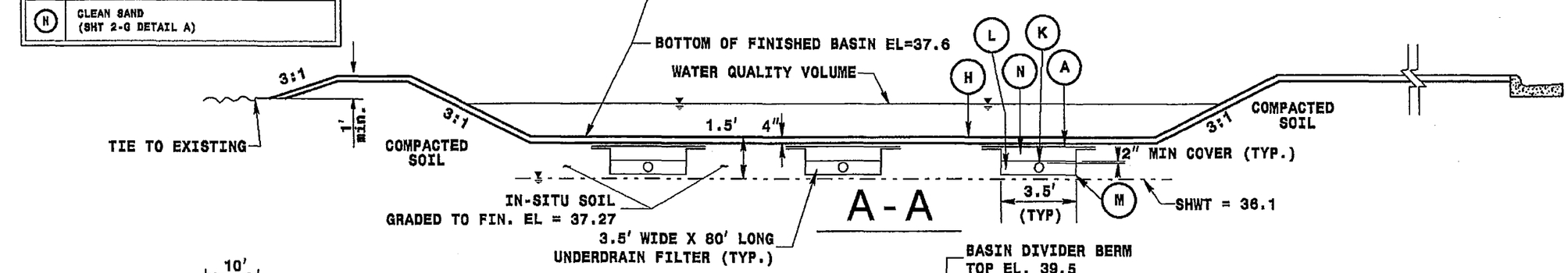

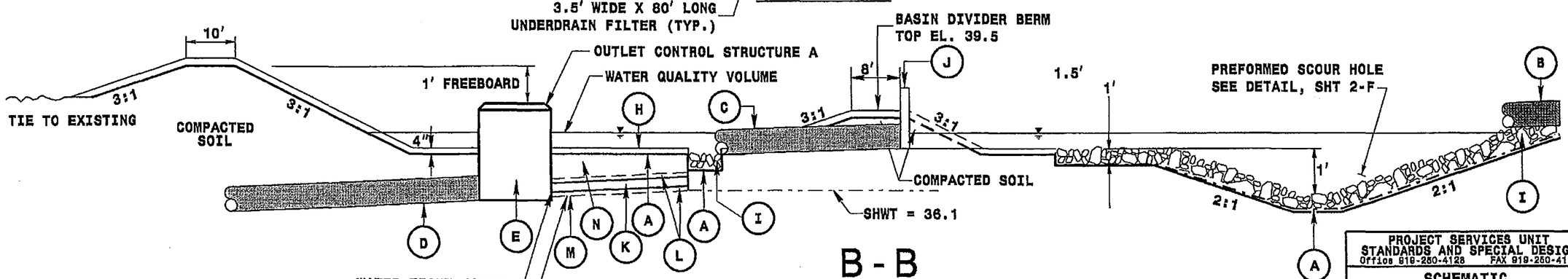

TYPICAL SECTIONS

*NOT TO SCALE

PROJECT SERVICES UNIT
STANDARDS AND SPECIAL DESIGN
Office 919-250-4128 FAX 919-250-4119

SCHEMATIC
HAZARDOUS SPILL BASIN
BIORETENTION BASIN

ORIGINAL BY: DATE:
MODIFIED BY: LWJ DATE: 7-20-09
CHECKED BY: DATE:
FILE SPEC.:

5/28/99

4/9/2013
lwjohns
R:\Hydraulics\PERMITS_Environmental\Drawings\K3800_HSB_Bland_Schematic_Outlet_Control_SH_2C_2E.dgn
$$$$$$$$SYSTIME$$$$$$
$$$$$$$$$$$$$$$$$$$$USERNAME$$$$$$$$

PROJECT REFERENCE NO.	SHEET NO.
K-3800	2-D

WETLAND AND SURFACE WATER IMPACTS PERMIT

PERMIT DRAWING SHEET 5 OF 10

Permit Drawing
Sheet 5 of 10

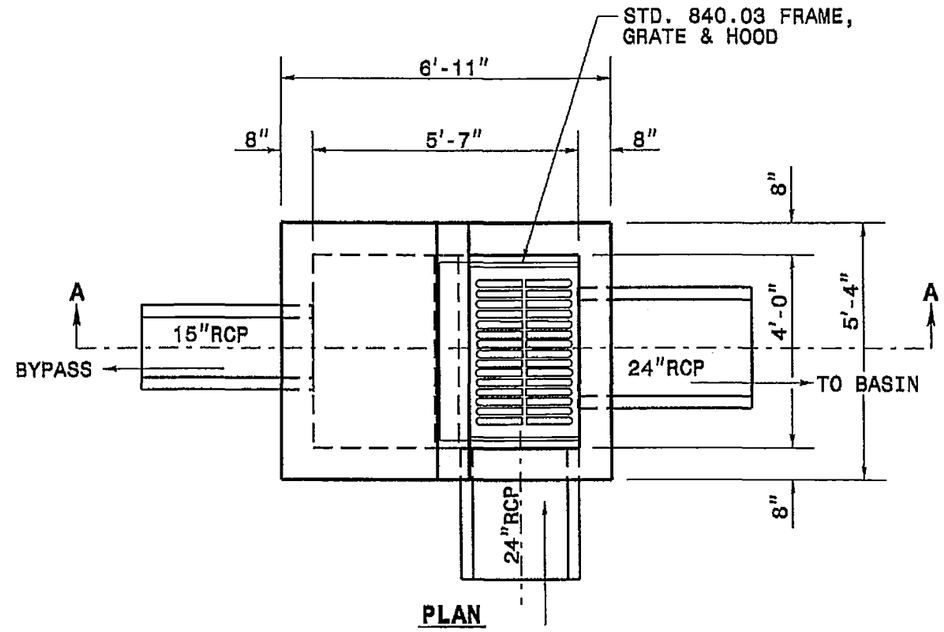

PLAN

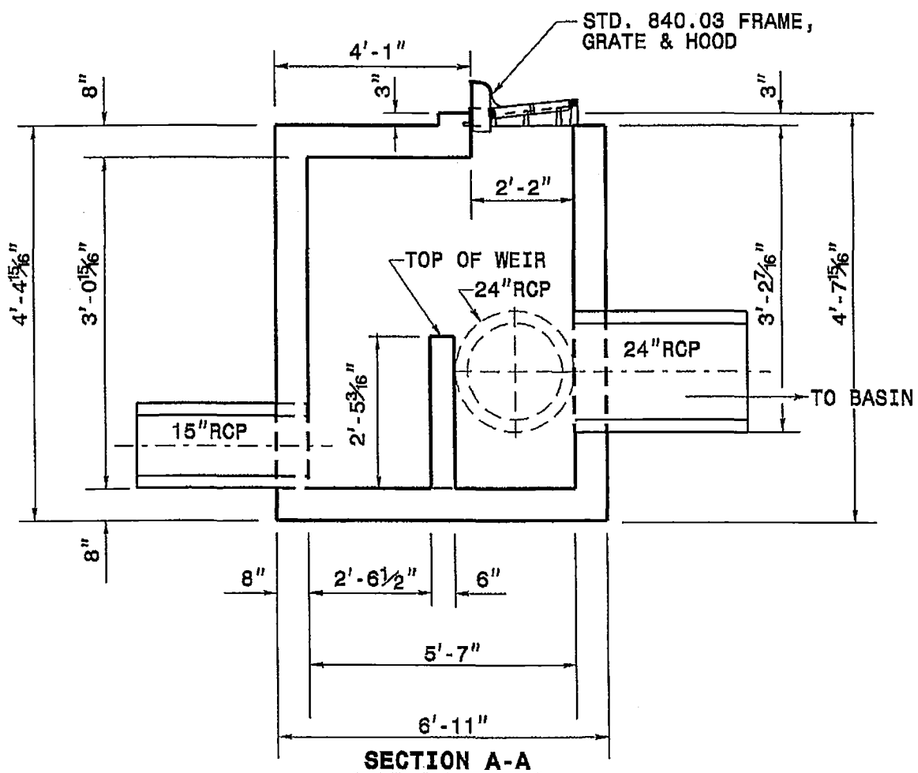

SECTION A-A

PROJECT SERVICES UNIT
STANDARDS AND SPECIAL DESIGN
Office 919-250-4128 FAX 919-250-4119

CATCH BASIN
SPLITTER BOX

ORIGINAL BY: DATE:
MODIFIED BY: DATE:
CHECKED BY: DATE:
FILE SPEC.: details\kkesof\english\splitter2box.dgn

5/16/99

3/28/2013
kmjohns
E:\Hydraulics\PERMITS_Environmental\Drawings\K3800_CB_splitterbox_2D.dgn

$$$$$$SYSTEM$$$$$
$$$$$$SYSTEM$$$$$
$$$$$$DESIGN$$$$$$$$$$$$$$$$$$$$
$$$$USERNAME$$$$

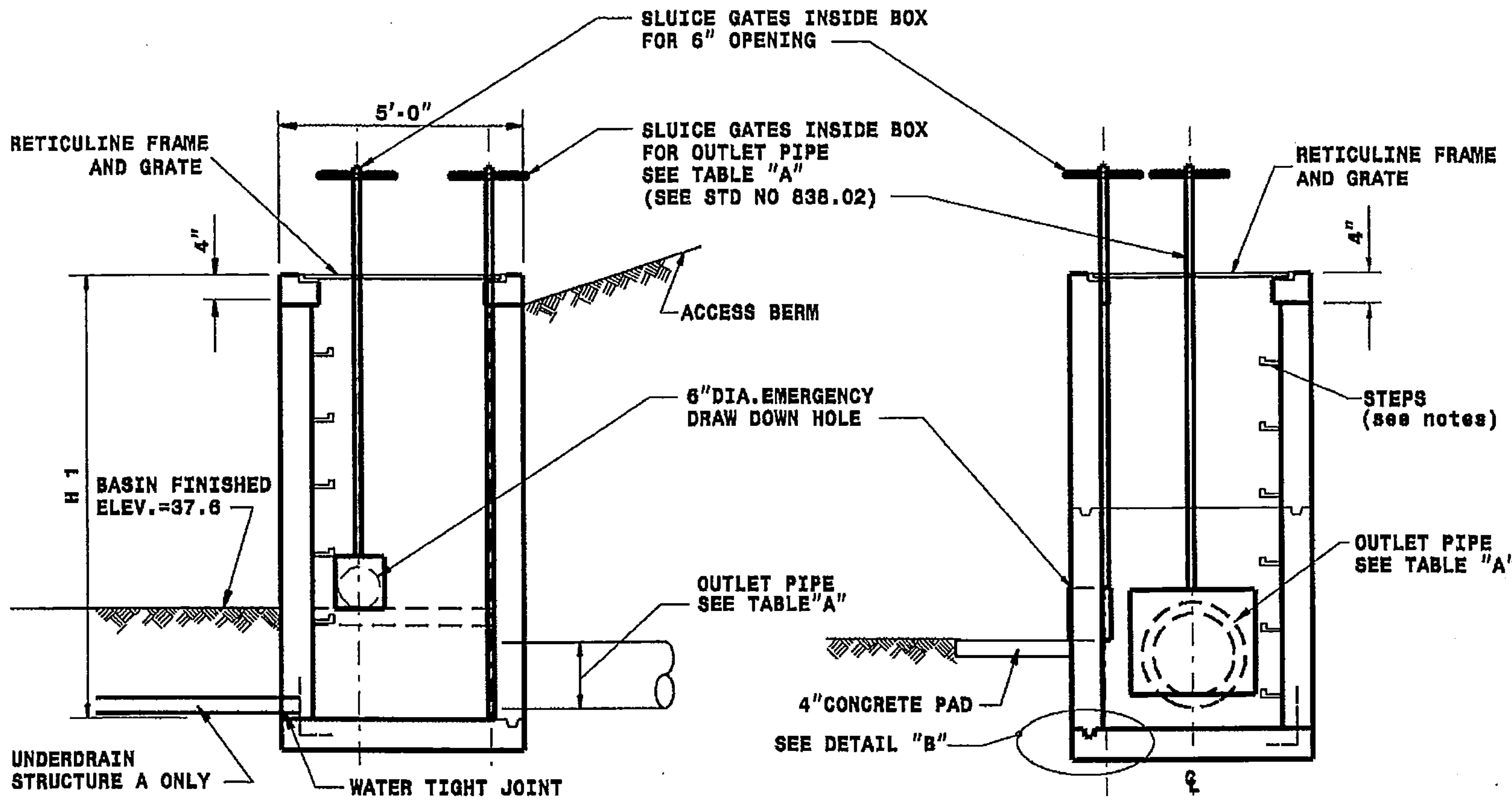

STRUCTURE SIDE 1

STRUCTURE SIDE 2

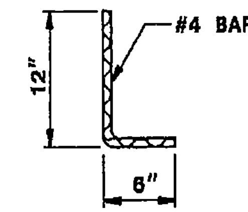

DOWEL

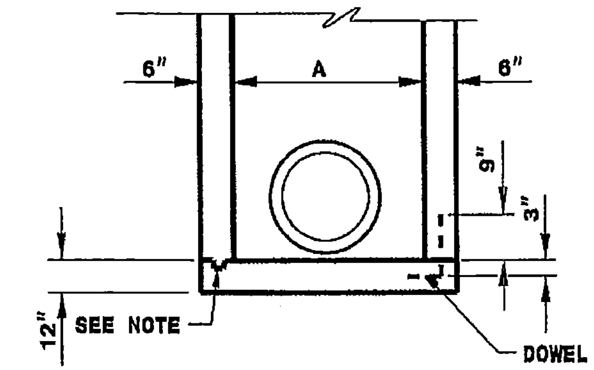

DETAIL 'B'

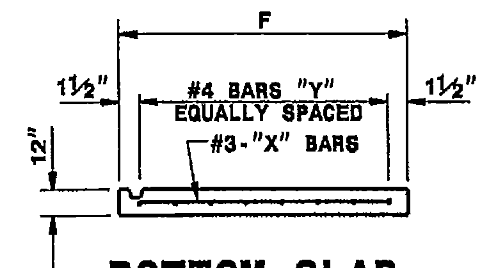

BOTTOM SLAB

TABLE "A"

MINIMUM DIMENSIONS FOR OUTLET CONTROL STRUCTURE									
CONTROL STRUCT.	BASIN	PIPE D	OUTLET PIPE INVERT	BOX HEIGHT H1	TOP OF GRATE ELEV.	UNDER DRAIN INVERT	UNDERDRAIN PIPE D	POOL BASIN ELEV. @ ORFICE PAD	OUTLET PIPE SLUICE GATE
A	-Y2- STA 16+58.5,88' LT	12"	36.25	2.92	39.0	36.25	4"	37.6	12"
B	-Y2- STA 16+71,126.7' LT	24"	34.25	4.50	38.50	N/A	N/A	37.6	24"

CONTROL STRUCT.	PIPE D	"A"	BARS-X		BARS-Y		"F"	TOTAL CONCRETE QUANTITIES
			QTY.	LENGTH	QTY.	LENGTH		
A	12"	4'-0"	6	4'-9"	6	4'-9"	5'-0"	2.0 CU.YDS.
B	24"	4'-0"	6	4'-9"	6	4'-9"	5'-0"	2.5 CU.YDS.

GENERAL NOTES:

* CHANGES IN ELEVATIONS MUST BE APPROVED BY THE ENGINEER.
* CLASS 'B' CONCRETE TO BE USED THROUGHOUT. PRECAST CONCRETE STRUCTURES TO BE SUBMITTED FOR APPROVAL. USE STD 840.45.
* OPTIONAL CONSTRUCTION - MONOLITHIC POUR, 2 INCH KEYWAY, OR #4 BAR DOWELS AT 12 INCH CENTERS, AS DIRECTED BY THE ENGINEER.
* FORMS ARE TO BE USED FOR THE CONSTRUCTION OF THE BOTTOM SLAB.
* IF REINFORCED CONCRETE PIPE IS SET IN BASE SLAB OF BOX, ADD TO BASE AS SHOWN ON STANDARD 840.00.
* ALL DRAWDOWN STRUCTURES OVER 3 FEET IN DEPTH TO BE PROVIDED WITH STEPS 12 INCH ON CENTERS. STEPS SHALL BE INSTALLED IN ACCORDANCE WITH STANDARD 840.66.
* FOR 8'-0" IN HEIGHT OR LESS USE 6 INCH WALLS AND BOTTOM SLAB. OVER 8'-0" IN HEIGHT USE 12" WALLS TO 6'-0" FROM TOP OF WALL AND USE 6 INCH THICK WALLS FOR THE REMAINING 6'-0". ADJUST QUANTITIES ACCORDINGLY
* RETICULINE FRAME AND GRATE TO BE APPROVED BY THE ENGINEER.

PROJECT SERVICES UNIT
STANDARDS AND SPECIAL DESIGN
Office 919-250-4128 FAX 919-250-4119

DETAIL OF OUTLET CONTROL STRUCTURES A AND B

ORIGINAL BY: ______ DATE: ______
MODIFIED BY: LNJ DATE: 7-20-09
CHECKED BY: ______ DATE: ______
FILE SPEC.: kkempf/english/k3800_hsbandoutlet_control

8/17/99

WETLAND AND SURFACE WATER IMPACTS PERMIT

PROJECT REFERENCE NO.	SHEET NO.
K-3800	2-F
R/W SHEET NO.	
ROADWAY DESIGN ENGINEER	HYDRAULICS ENGINEER

Permit Drawing
Sheet 7 of 10

PRELIMINARY PLANS
DO NOT USE FOR CONSTRUCTION

PERMIT DRAWING
SHEET 7 OF 10

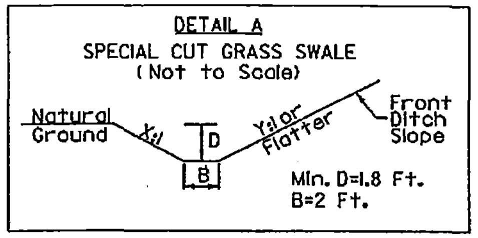

-Y1-STA. 11+00 LT. TO -L-STA. 10+75 LT., X=3, Y=4
-Y1-STA. 15+33 LT. TO -Y1-STA. 18+92 LT., X=5, Y=5

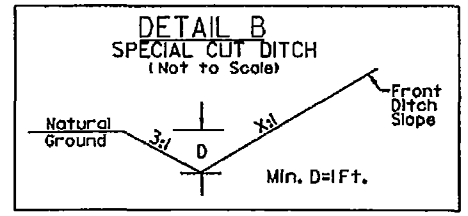

-L- STA. 10+75 TO STA. 11+50 LT., X=4
-L- STA. 10+75 TO STA. 11+22.5 RT., X=4
-Y1- STA. 22+08 TO STA. 22+54 RT., X=3

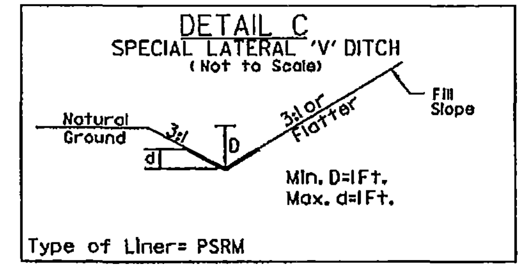

-L- STA. 19+13 TO STA. 19+36.74 LT.

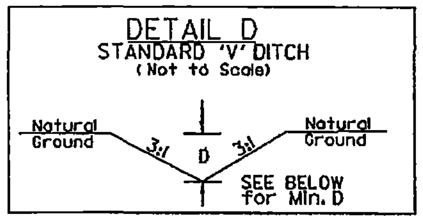

-Y1- STA. 18+37.49' TO STA. 18+54.38' RT., D=1.5', L=20', s=5.15%, DDE=40 CY
-Y1- STA. 18+97.6,35' TO STA. 18+97.4,55' LT., D=1.8', L=20', s=0.75%, DDE=11 CY

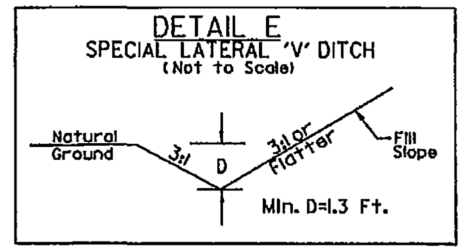

-L- STA. 19+36.74 TO STA. 21+00 LT.

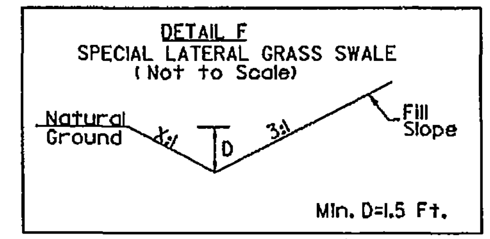

-L- STA. 21+00 TO STA. 21+60 LT., X=5
-Y1- STA. 12+00 TO STA. 16+50 RT., X=3
-Y1- STA. 18+63 TO STA. 19+50 RT., X=3

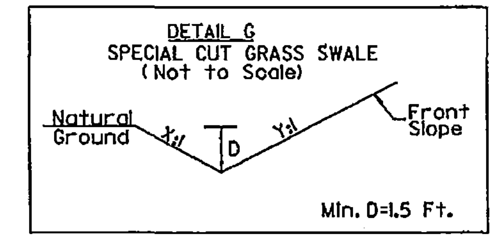

-Y1- STA. 10+92 RT. TO -Y1-STA. 12+00 RT., X=3, Y=4
-Y1- STA. 16+50 TO STA. 18+42 RT., X=3, Y=3
-Y1- STA. 19+50 TO STA. 22+08 RT., X=3, Y=3

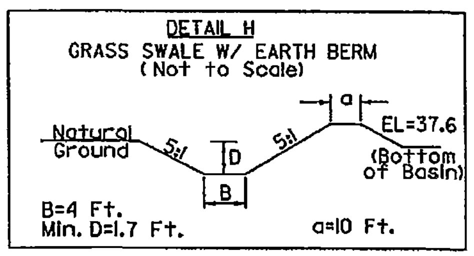

FROM -Y2- STA. 16+96.4, 99.9' LT.
TO -L- STA. 20+01.4, 116.7' RT.
TO -L- STA. 20+66.0, 106.6' RT.
L=110', S=0.3%, DDE=690 CUYDS

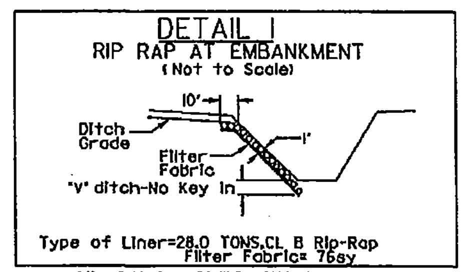

-Y1- STA. 18+31 TO STA. 18+73 RT.

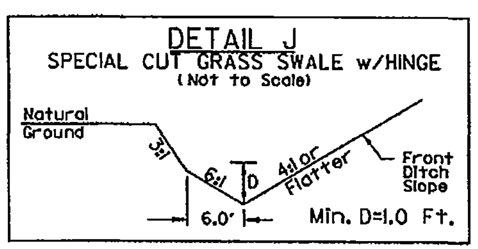

US 17 STA. 202+00 TO STA. 203+00 RT.

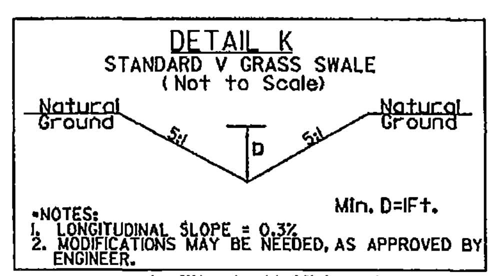

*NOTES:
1. LONGITUDINAL SLOPE = 0.3%
2. MODIFICATIONS MAY BE NEEDED, AS APPROVED BY ENGINEER.

-L- STA 20+80 RT, L=35'
-L- STA 26+77 RT, L=50'
-Y2- STA 18+20.56 LT, L=50'

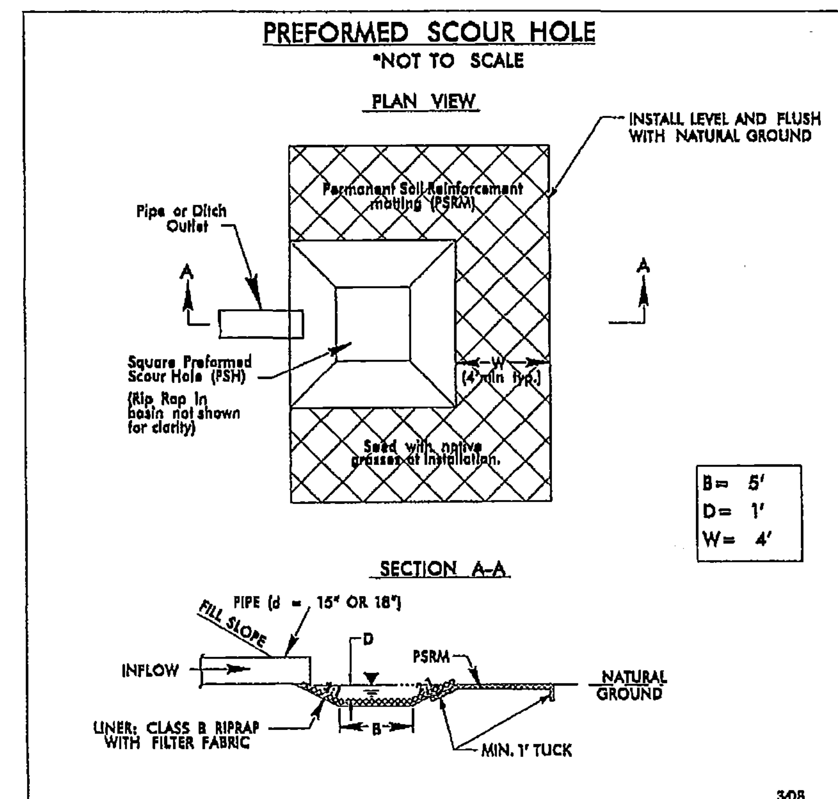

-L- STA. 19+00 RT., -L- STA. 22+50 LT., -L- STA. 23+84.84 LT.,
-Y2- STA. 16+27.7' LT.

PROJECT REFERENCE NO.	SHEET NO.
K-3800	2-G
R/W SHEET NO.	
ROADWAY DESIGN ENGINEER	HYDRAULICS ENGINEER

Permit Drawing
Sheet 8 of 10

PRELIMINARY PLANS
DO NOT USE FOR CONSTRUCTION

WETLAND AND SURFACE WATER IMPACTS PERMIT

PERMIT DRAWING
SHEET 8 OF 10

BIORETENTION/HAZARDOUS SPILL BASIN

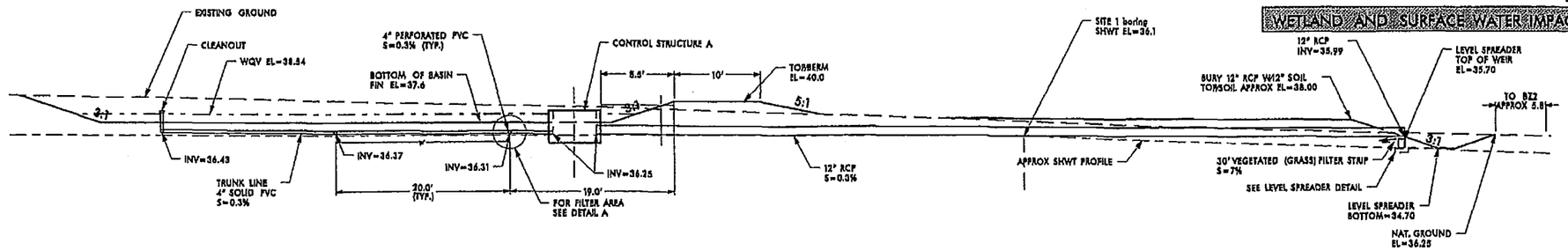

CROSS SECTION AT CONTROL STRUCTURE A

SCALE: HORIZ: 1"=10'
VERT: 1"=10'

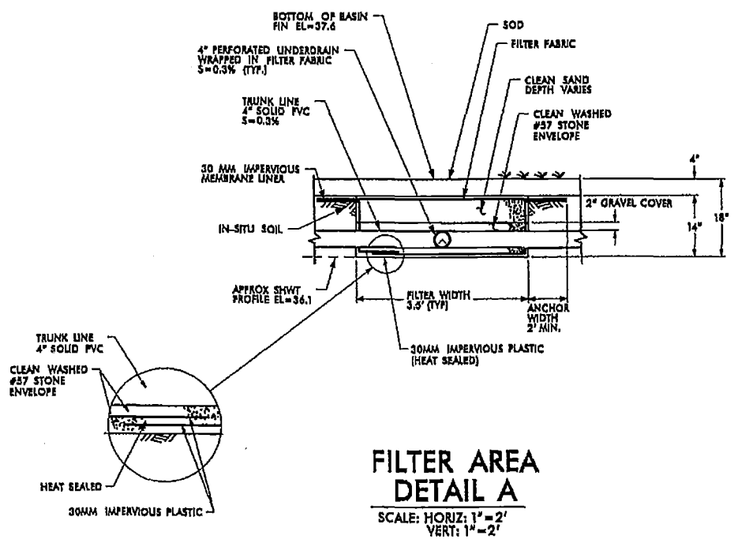

FILTER AREA DETAIL A

SCALE: HORIZ: 1"=2'
VERT: 1"=2'

NOTES:
1. 4" PERFORATED PIPE MINIMUM INLET AREA = 4.0sq in/ft
2. EDGE OF PLASTIC LINING SHOULD BE ANCHORED IN TO THE GROUND A MINIMUM OF 2.0'
3. IF A JOINT IN THE PLASTIC LINING IS REQUIRED, IT SHOULD BE HEAT SEALED TO PREVENT LEAKAGE.

END CLEANOUT

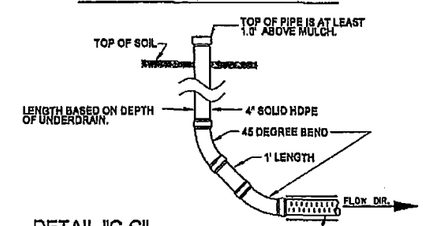

DETAIL "C-C"

NOTE: ONLY UNDERDRAIN PIPE SHOULD BE PERFORATED

*NOT TO SCALE

UNDERDRAIN TRANSITION INTO TRUNK LINE

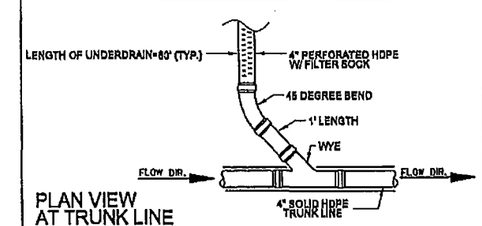

PLAN VIEW AT TRUNK LINE

NOTE: ONLY UNDERDRAIN PIPE SHOULD BE PERFORATED

*NOT TO SCALE

SAND SPECIFICATIONS

WASHED ASTM C33 OR AASHTO M-6 FINE AGGREGATE CONCRETE SAND. IN ADDITION TO THESE SPECIFICATIONS, SAND MUST MEET ALL THE FOLLOWING CONDITIONS:

1. SAND MUST BE SILICA BASED. NO LIMESTONE BASED PRODUCTS MAY BE USED. IF THE MATERIAL IS WHITE OR GRAY IN COLOR, IT IS PROBABLY NOT ACCEPTABLE.
2. SAND MUST BE CLEAN. NATURAL UNWASHED SAND DEPOSITS MAY NOT BE USED. LIKEWISE, SAND THAT HAS BECOME CONTAMINATED BY IMPROPER STORAGE OR INSTALLATION PRACTICES SHALL BE REJECTED.
3. MANUFACTURED SAND OR STONE DUST IS NOT ACCEPTABLE UNDER ANY CIRCUMSTANCES.

8/17/99

7/10

PROJECT REFERENCE NO.	SHEET NO.
K-3800	2-H
R/W SHEET NO.	
ROADWAY DESIGN ENGINEER	HYDRAULICS ENGINEER

Permit Drawing
Sheet 9 of 10

PRELIMINARY PLANS
DO NOT USE FOR CONSTRUCTION

WETLAND AND SURFACE WATER IMPACTS PERMIT

PERMIT DRAWING SHEET 9 OF 10

WALL LEVEL SPREADER DETAIL

(NOT TO SCALE)
FROM -Y2- STA. 17+11 TO STA. 17+15 LT.

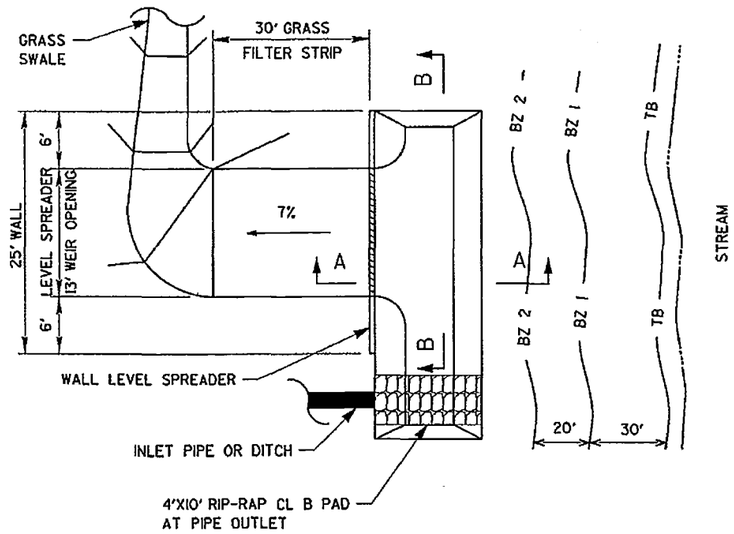

PLAN

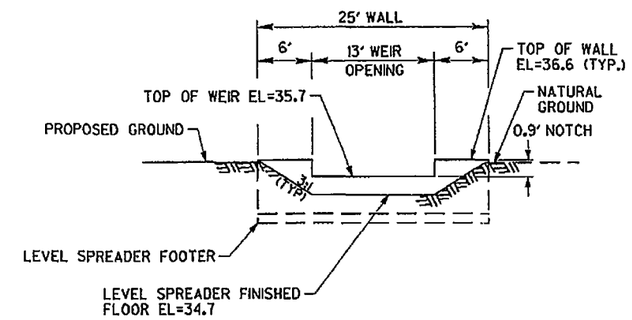

FACE OF WALL SECTION-BB

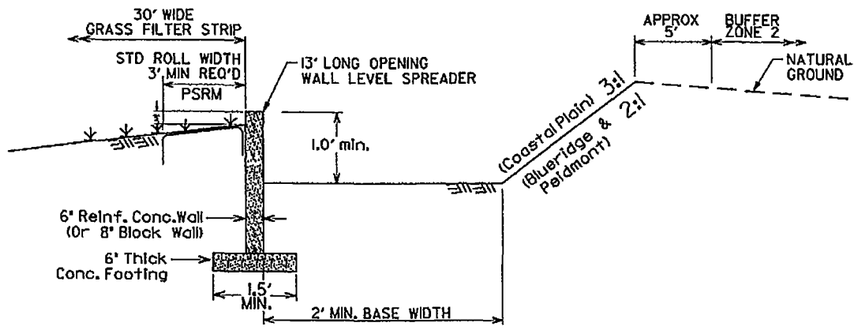

DDE=220 CY

SECTION-AA

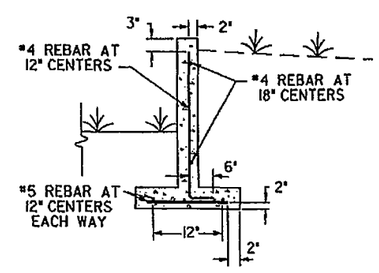

SECTION-AA REINFORCEMENT

NOTES:

1. THE REINFORCING SHALL BE #4 BARS AT 12" CENTERS ALONG THE LENGTH OF THE WALL STEM AND #4 BARS AT 18" CENTERS FOR THE HEIGHT OF THE WALL.
2. THE BENT REBAR AT THE ENDS OF THE #4 BARS AT 18" CENTERS SHALL BE PLACED IN AN ALTERNATING PATTERN.
3. AT THE CORNERS OF THE CONNECTING WALL STEMS, THE #4 AT 12" CENTER REBARS ALONG THE LENGTH OF THE WALL SHALL BE BENT AND EXTENDED INTO THE WALLS BY 1'-4" TYPICAL.
4. FOR THE FOOTING ITSELF THE REINFORCING SHALL BE #5 BARS AT 12" CENTERS EACH WAY.
5. SEE NCDOT STANDARD 850.01 FOR USE IN CONSTRUCTING CONCRETE TROUGH.

7/10

8/17/99

3/25/2003
$$$$$$$SYSTIME$$$$$$
$$$$$$$USERID$$$$$$
$$$$$$$DGN$$$$$$$$$$$$$$$$$$$$
$$$$$$$USERNAME$$$$$$

WETLAND PERMIT IMPACT SUMMARY

			WETLAND IMPACTS					SURFACE WATER IMPACTS				
Site No.	Station (From/To)	Structure Size / Type	Permanent Fill In Wetlands (ac)	Temp. Fill In Wetlands (ac)	Excavation in Wetlands (ac)	Mechanized Clearing in Wetlands (ac)	Hand Clearing in Wetlands (ac)	Permanent SW impacts (ac)	Temp. SW impacts (ac)	Existing Channel Impacts Permanent (ft)	Existing Channel Impacts Temp. (ft)	Natural Stream Design (ft)
1	-Y2- 17+59	60" RCP	-	-	-	-	-	< 0.01	< 0.01	128	30	
2	-L- 21+68	60" RCP	-	-	-	-	-	< 0.01	< 0.01	141	30	
TOTALS:								0.01	< 0.01	269	60	

NC DEPARTMENT OF TRANSPORTATION
DIVISION OF HIGHWAYS

BEAUFORT COUNTY
WBS - 38748.1.1 (K-3800)
3/28/2013
SHEET 10 OF 10

ATN Revised 3/31/05

Permit Drawing
Sheet 10 of 10

See Sheet 1-A For Index of Sheets
See Sheet 1-B For Conventional Symbols

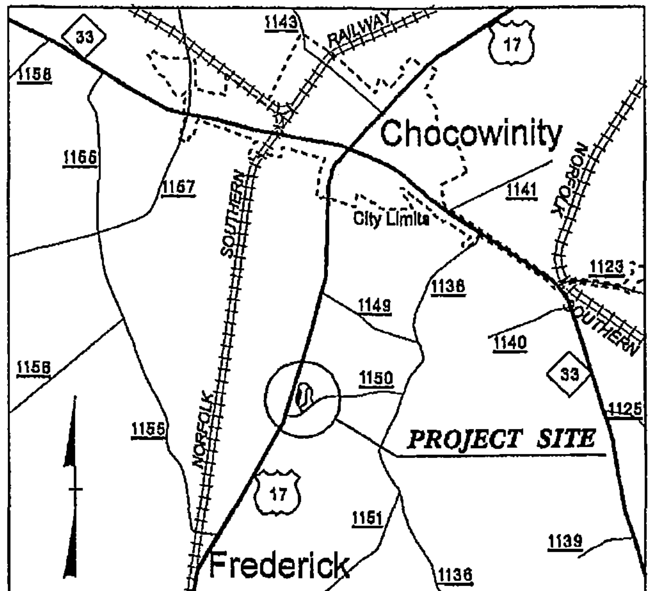

VICINITY MAP

STATE OF NORTH CAROLINA
DIVISION OF HIGHWAYS

BEAUFORT COUNTY

LOCATION: US 17 REST AREA

TYPE OF WORK: GRADING, PAVING, DRAINAGE, LIGHTING, REST AREA AND FACILITIES

BUFFER IMPACTS

STATE	STATE PROJECT REFERENCE NO.	SHEET NO.	TOTAL SHEETS
N.C.	K-3800	1	

STATE PROJ. NO.	F.A. PROJ. NO.	DESCRIPTION
38748.1.1	NHS-17(32)	PE
38748.2.1	NHS-17(32)	ROW, UTIL

Buffer Drawing
Sheet 1 of 10

BUFFER IMPACTS PERMIT

BUFFER DRAWING
SHEET 1 OF 10

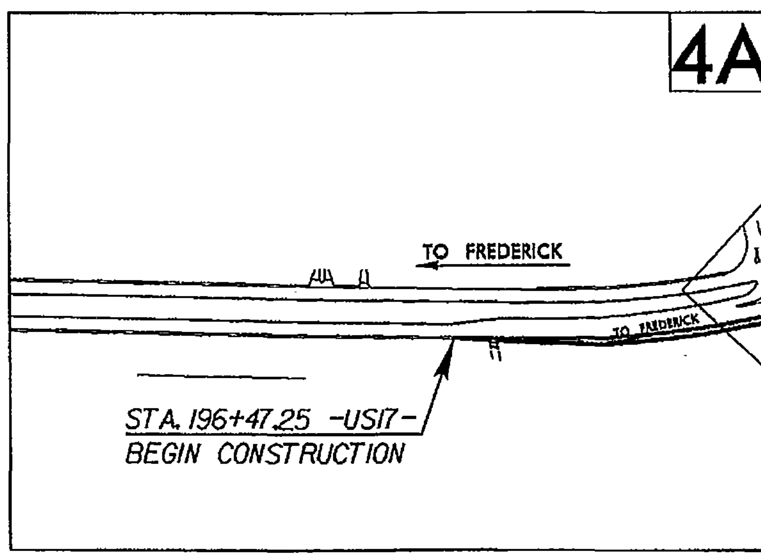

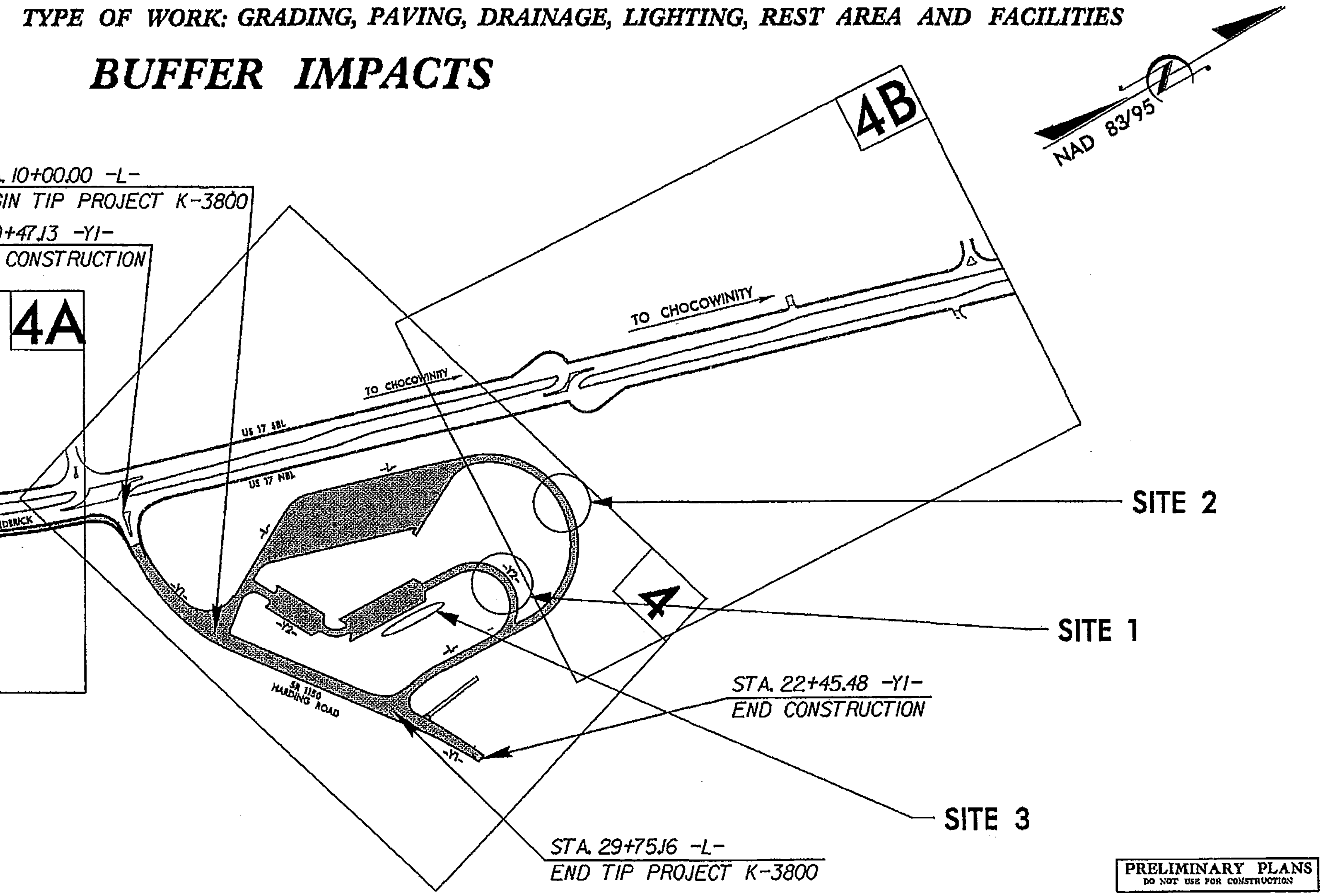

THIS IS A PARTIAL CONTROL OF ACCESS PROJECT WITH ACCESS BEING LIMITED TO THE POINTS AS SHOWN ON THE PLANS.

THIS PROJECT IS NOT WITHIN ANY MUNICIPAL BOUNDARIES.

CLEARING ON THIS PROJECT SHALL BE PERFORMED TO THE LIMITS ESTABLISHED BY METHOD III.

PRELIMINARY PLANS
DO NOT USE FOR CONSTRUCTION

TIP PROJECT: K-3800

CONTRACT:

GRAPHIC SCALES

50 25 0 50 100
PLANS

50 25 0 50 100
PROFILE (HORIZONTAL)

10 5 0 10 20
PROFILE (VERTICAL)

DESIGN DATA

ADT 2011 = 864
ADT 2031 = 1,352
DHV = N/A %
D = N/A%
T = 12 %
V = 20 MPH

PROJECT LENGTH

LENGTH ROADWAY TIP PROJECT K-3800 = 0.374 MILES
TOTAL LENGTH TIP PROJECT K-3800 = 0.374 MILES

Prepared in the Office of:
DIVISION OF HIGHWAYS
1000 Birch Ridge Dr., Raleigh NC, 27610

2012 STANDARD SPECIFICATIONS

RIGHT OF WAY DATE:
NOVEMBER 20, 2009

LETTING DATE:
JANUARY 21, 2014

G. E. BREW, PE
PROJECT ENGINEER

THAD F. DUNCAN, PE
PROJECT DESIGN ENGINEER

HYDRAULICS ENGINEER

SIGNATURE: P.E.

ROADWAY DESIGN ENGINEER

SIGNATURE: P.E.

DIVISION OF HIGHWAYS
STATE OF NORTH CAROLINA

STATE HIGHWAY DESIGN ENGINEER P.E.

09/08/99

$$$$SYSTIME$$$$ $$$$USERNAME$$$$ $$$$DGN$$$$$$$$$$$$$$$$$$$$$$$$

8/17/99

PROJECT REFERENCE NO.	SHEET NO.
K-3800	4

R/W SHEET NO.

ROADWAY DESIGN ENGINEER | HYDRAULICS ENGINEER

Buffer Drawing
Sheet 2 of 10

PRELIMINARY PLANS
DO NOT USE FOR CONSTRUCTION

BUFFER IMPACTS PERMIT

BUFFER DRAWING SHEET 2 OF 10

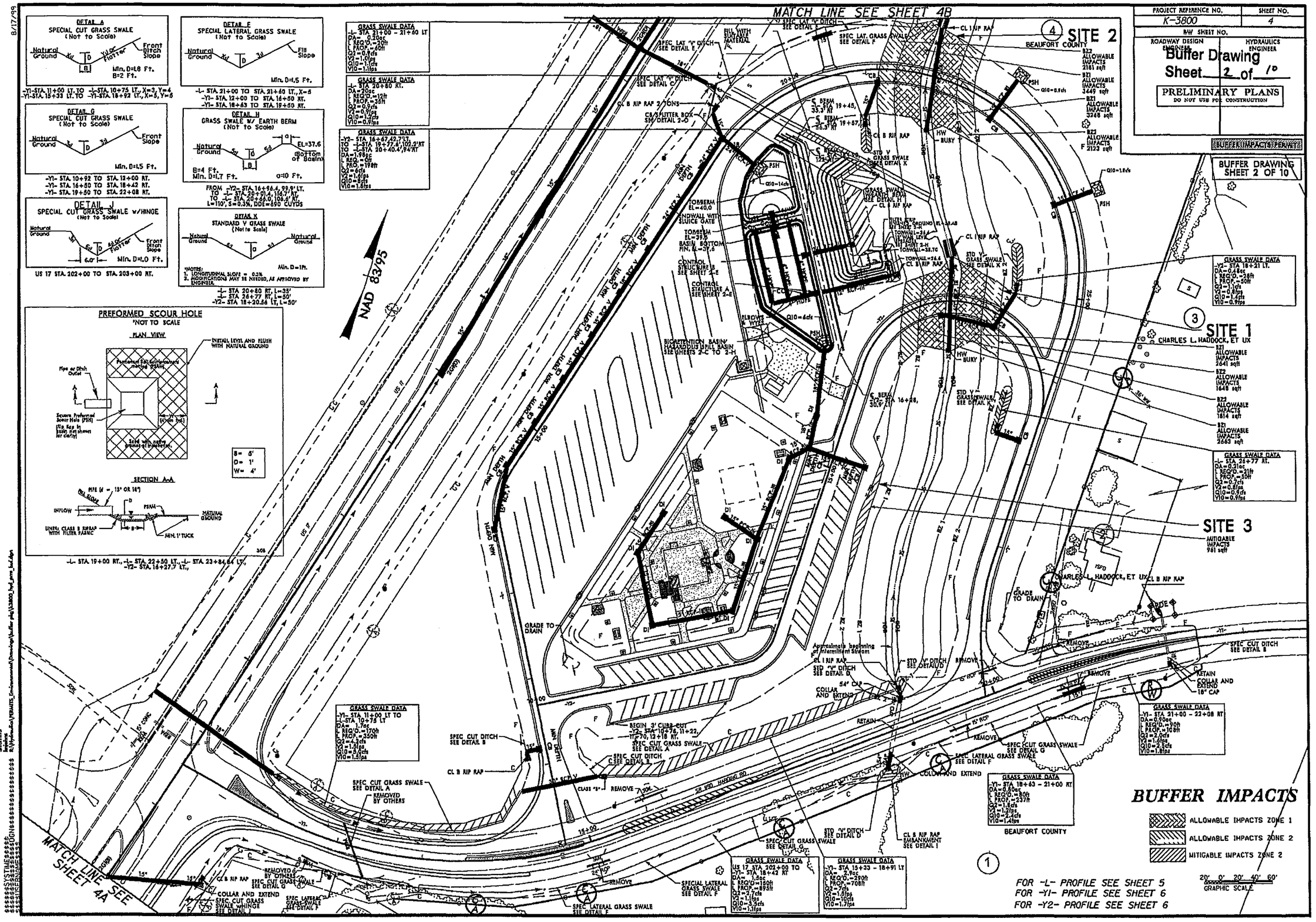

PROJECT REFERENCE NO.	SHEET NO.
K-3800	4
R/W SHEET NO.	
ROADWAY DESIGN ENGINEER	HYDRAULICS ENGINEER

Buffer Drawing
Sheet 3 of 10

PRELIMINARY PLANS
DO NOT USE FOR CONSTRUCTION

BUFFER IMPACTS PENNITZ

BUFFER DRAWING SHEET 3 OF 10

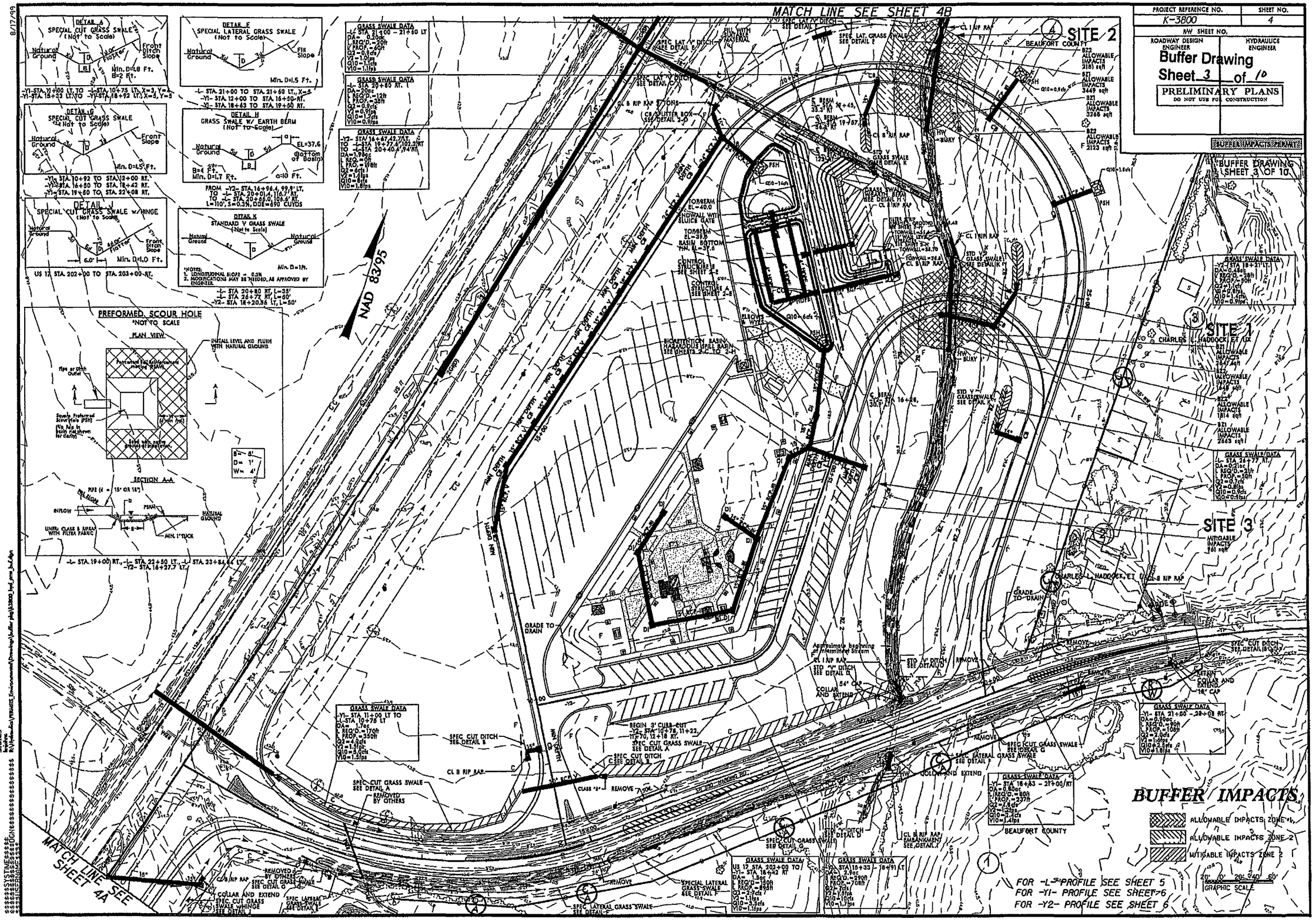

MATERIALS

A	GEOTEXTILE FOR SUBSURFACE DRAINS, TYPE 1
B	24" RCP INLET PIPE
C	18" RCP EQUALIZER PIPE
D	12" RCP OUTFALL PIPE TO LEVEL SPREADER (SHT 2-H)
E	OUTLET CONTROL STRUCTURE A W/ SLUICE GATE (SHT 2-E)
F	OUTLET CONTROL BYPASS STRUCTURE B W/ SLUICE GATE (SHT 2-E)
G	24" RCP BYPASS OUTLET PIPE TO GRASS SWALE (SHT 2-F,DETAIL H)
H	TOP SOIL AND ½ CUT BERMUDA SOD
I	CLASS B RIP RAP
J	END WALL WITH 18" SLUICE GATE (STD 838.02)
K	4" UNDERDRAIN PERFORATED PIPE 3 @ 80', 20' SPACING WRAPPED IN FILTER FABRIC
L	CLEAN WASHED #57 STONE ENVELOPE (SHT 2-G, DETAIL A)
M	30mil IMPERVIOUS MEMBRANE LINER (SHT 2-G DETAIL A)
N	CLEAN SAND (SHT 2-G DETAIL A)

NOTES:
1. SEE PLAN SHEET #4 FOR SHAPE AND SIZE OF BASIN.
2. BOTTOM OF BIORETENTION BASIN SURFACE AREA AT EL 37.6 = 6,858 SF. SEE SHT 4 FOR HSB GRADING PLAN
3. ALL FILL MATERIAL SHALL BE COMPACTED AND TESTED IN ACCORDANCE WITH NCDOT STD SPEC 235.
4. INSTALL SOD ON BERM AND BASIN BOTTOM AND ANY EXPOSED SURFACE THAT NEEDS TO BE PROTECTED AGAINST IMMEDIATE POTENTIAL STORM EVENT.
5. THE SURVEYOR SHALL CREATE A DTM FILE SUITABLE TO VERIFY BASIN CAPACITY TO THE ENGINEER, INCLUDING VERIFICATION OF INVERTS AND ELEVATIONS AT THE FOLLOWING POINTS:
   - CB SPLITTER BOX WEIR ELEVATION.
   - ALL TOP OF DRAINAGE STRUCTURE AND PIPE INVERT ELEVATIONS.
   - BOTTOM OF BASIN AREA, LOCATION AND ELEVATIONS.
   - TOP OF BERM WIDTH, LOCATION AND ELEVATIONS.
6. THE BERM SHALL BE CONSTRUCTED WITH SUITABLE FILL MATERIAL PER THE ENGINEER.
7. PREFORMED SCOUR HOLE AND SPLITTER BOX REQUIRES REGULAR MAINTENANCE TO REMAIN EFFECTIVE.
8. INSTALL UNDERDRAIN CLEANOUTS, WYES, AND ELBOWS PER LOCATIONS ON SHT 4

CONSTRUCTION SEQUENCE:

1. RELOCATE UTILITY LINES.
2. PUT IN ALL EROSION CONTROL MEASURES (AS NEEDED THROUGH CONSTRUCTION STAGES).
3. CONSTRUCT AND INSTALL BOXES, CREATE OPENINGS IN BOXES AND INSTALL PIPES.
4. EXCAVATE FOR THE BASIN AND PREPARE THE BASIN FLOOR AT THE GIVEN ELEVATION TO ALLOW FOR 4" SOIL AND BERMUDA SOD.
5. EXCAVATE AND CONSTRUCT PREFORMED SCOUR HOLE.
6. CONSTRUCT BERM AROUND BASIN.
7. INSTALL PREFORMED SCOUR HOLE RIP RAP.
8. LAY SOD.
9. ADD GRATES ON ALL BOXES.
10. TEMPORARILY BYPASS USAGE OF BASINS DURING CONSTRUCTION UNTIL VEGETATION IS ESTABLISHED AND CONSTRUCTION IS COMPLETE. (CAN BE OBTAINED BY BLOCKING PIPE IN SPLITTER BOX)

HAZARDOUS SPILL BIORETENTION BASIN

- BIORETENTION BASIN FINISHED BOTTOM EL = 37.6
- BASIN TOP OF BERM EL = 40.00
- BASIN DIVIDER TOP OF BERM EL = 39.50
- SPLITTER BOX WEIR EL = 40.93
- DESIGN STORM = RUNOFF GENERATED BY FIRST 1.5" RAINFALL
- DESIGN VOLUME = 13,191 CF
- VOLUME PROVIDED = 13,242 CF
- DDE = 725 CY
- BERM FILL = 220 CY
- UNDERDRAIN FILTER SURFACE AREA NOT TO EXCEED 840 SF

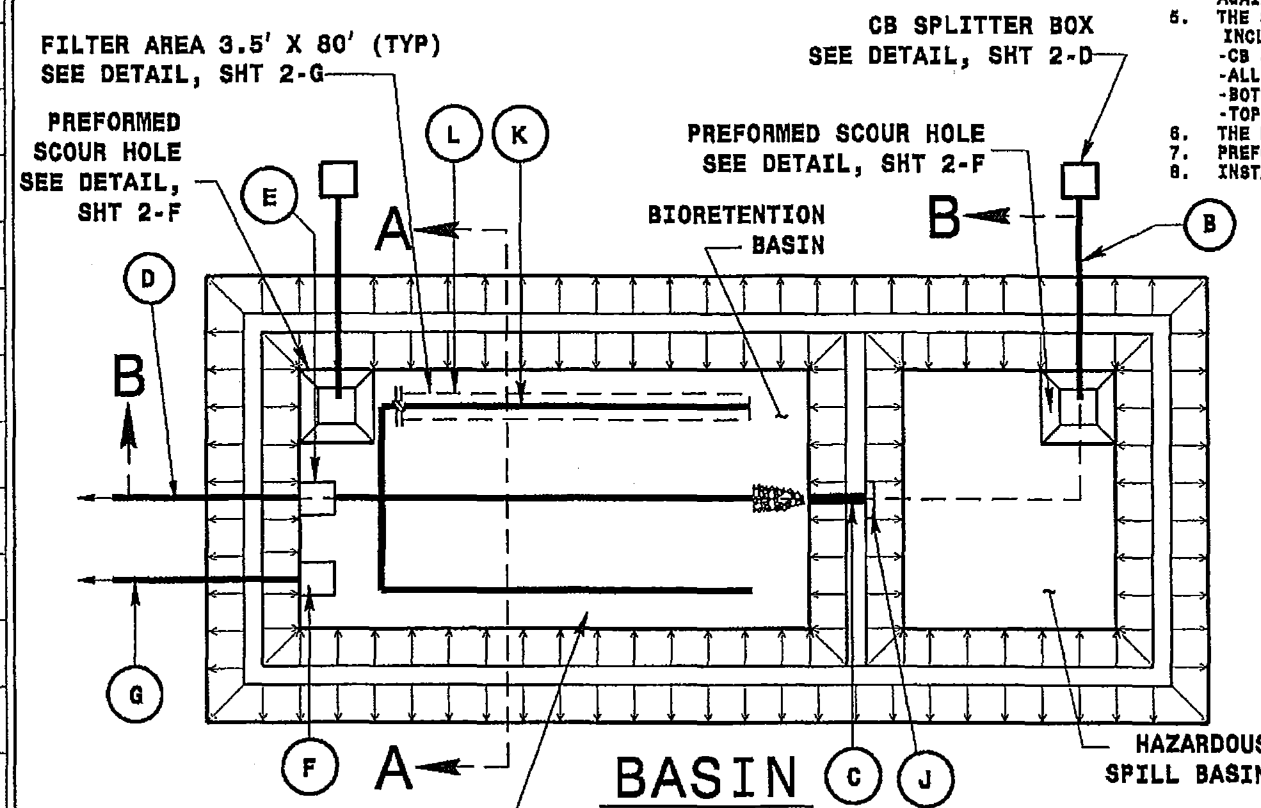

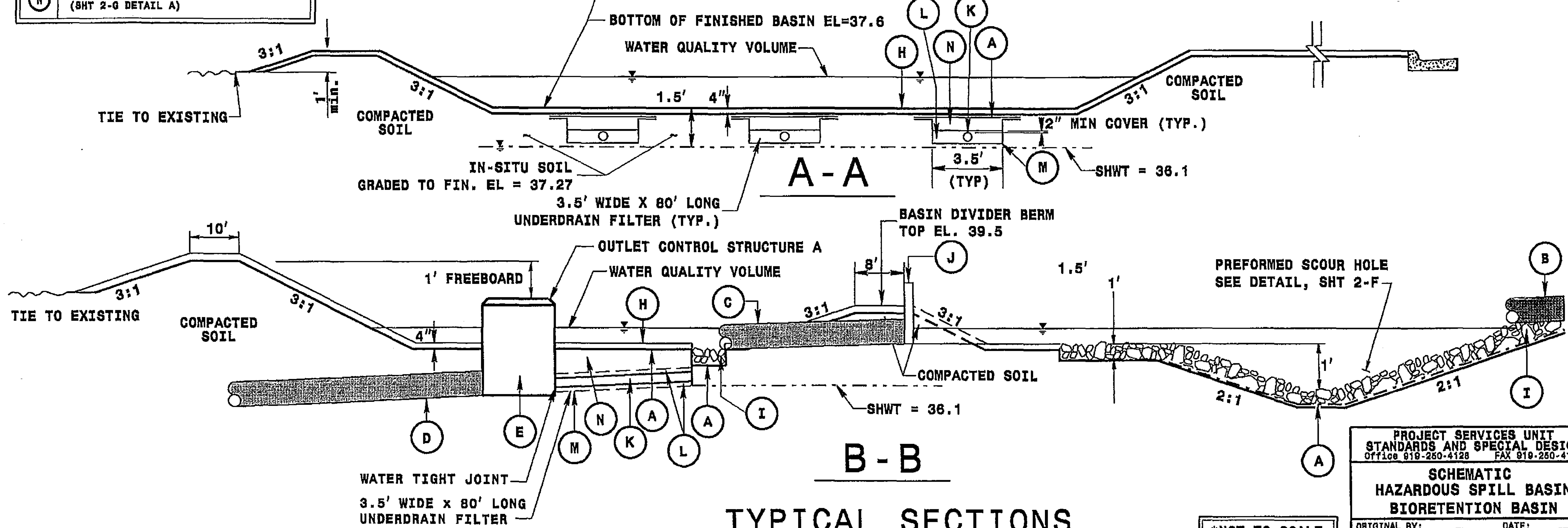

TYPICAL SECTIONS

*NOT TO SCALE

PROJECT SERVICES UNIT
STANDARDS AND SPECIAL DESIGN
Office 919-250-4128 FAX 919-250-4119

SCHEMATIC
HAZARDOUS SPILL BASIN
BIORETENTION BASIN

ORIGINAL BY: ______ DATE: ______
MODIFIED BY: LMJ DATE: 7-20-09
CHECKED BY: ______ DATE: ______
FILE SPEC.: ______

PROJECT REFERENCE NO.	SHEET NO.
K-3800	2-D

BUFFER IMPACTS PERMIT | BUFFER DRAWING SHEET 5 OF 10

Buffer Drawing
Sheet 5 of 10

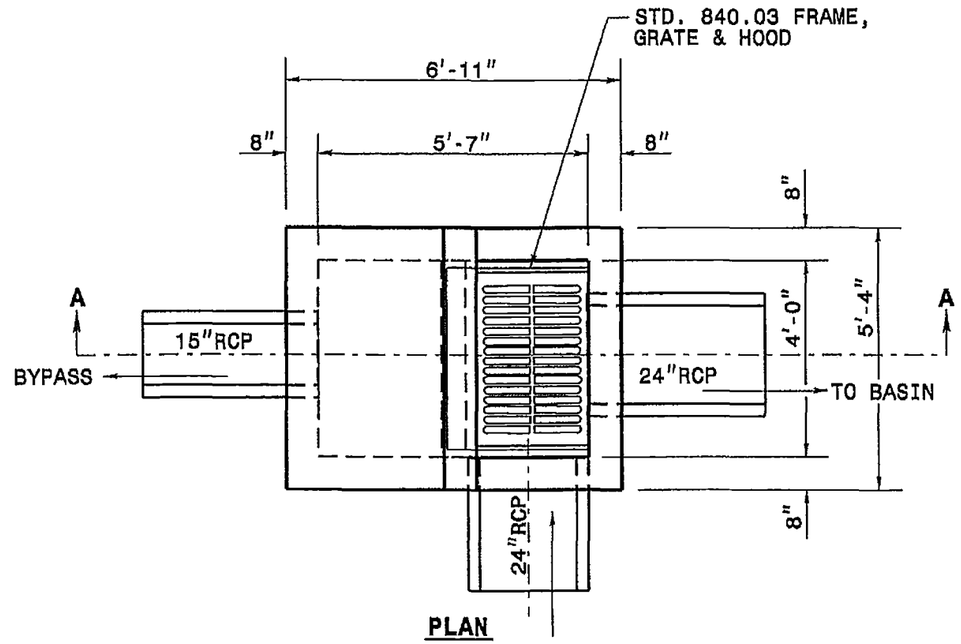

PLAN

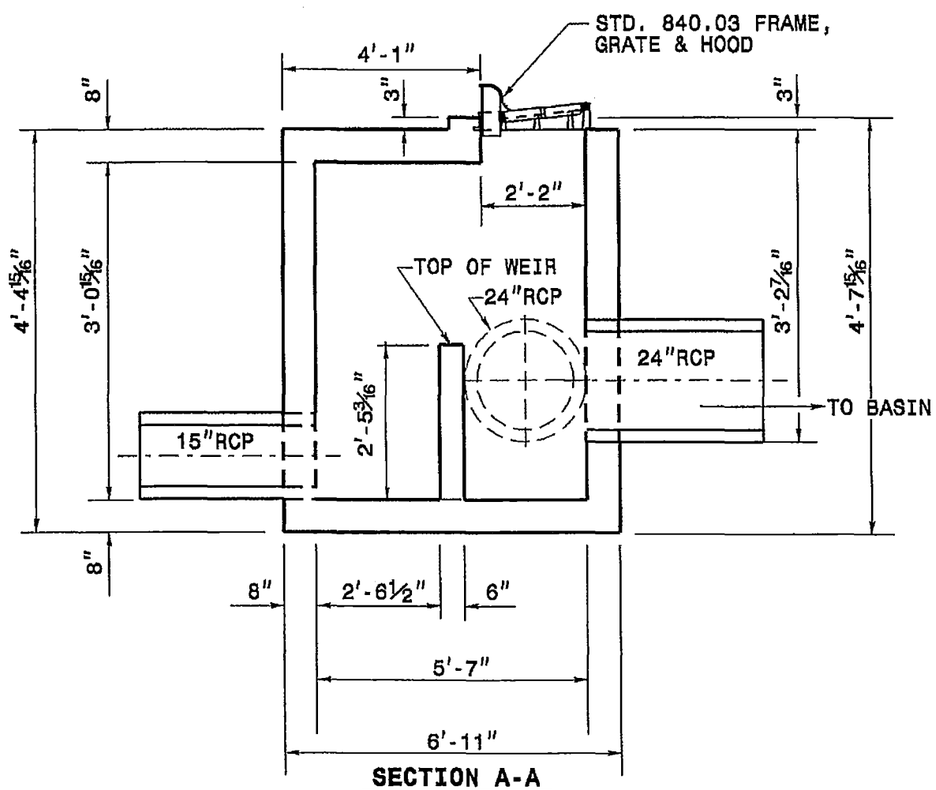

SECTION A-A

PROJECT SERVICES UNIT
STANDARDS AND SPECIAL DESIGN
Office 919-250-4128 FAX 919-250-4119

CATCH BASIN
SPLITTER BOX

ORIGINAL BY: DATE:
MODIFIED BY: DATE:
CHECKED BY: DATE:
FILE SPEC.: details\kkemp1\english\splitter2box.dgn

5/14/98

3/28/2013
lmjones
R:\Hydraulics\PERMITS_Environmental\Drawings\K3800_CB_splitterbox_2D.dgn

$$$$$$SYSTUNE$$$$$
$$$$$$$$$$$$$$$$$$DGNS$$$$$$$$$$$$$$$$$$
$$$$USERNAME$$$$

PROJECT REFERENCE NO.	SHEET NO.
K-3800	2-E

BUFFER IMPACTS PERMIT | BUFFER DRAWING SHEET 6 OF 10

Buffer Drawing
Sheet 6 of 10

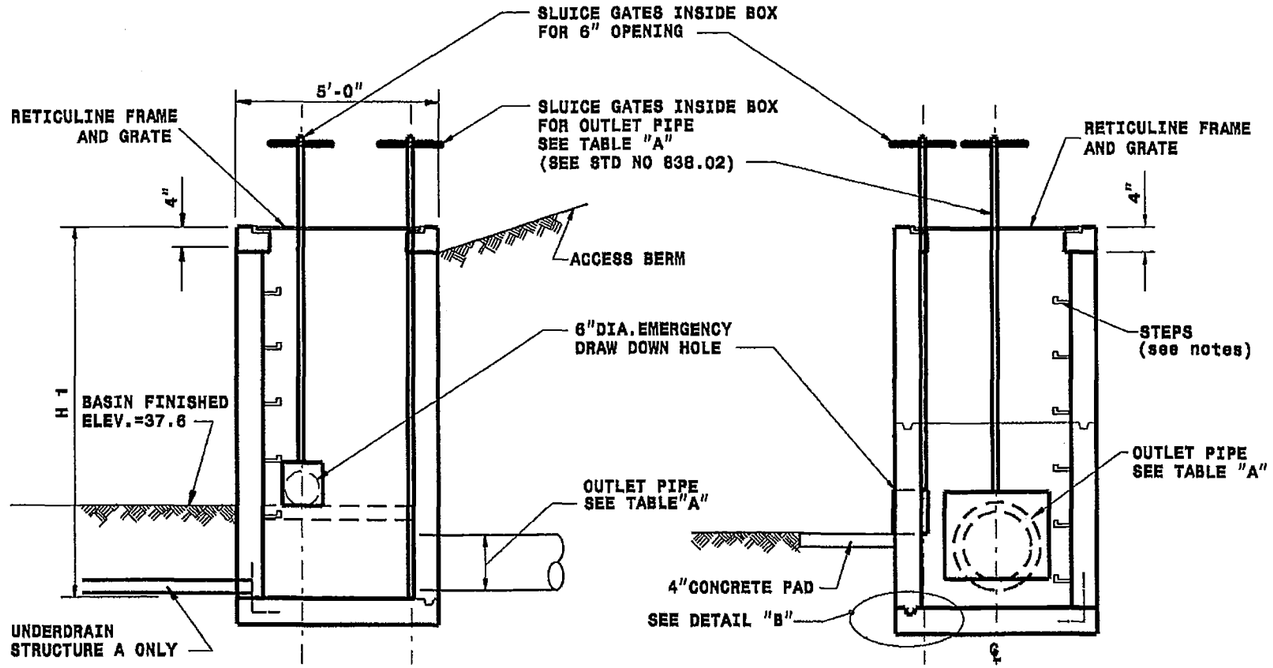

STRUCTURE SIDE 1

STRUCTURE SIDE 2

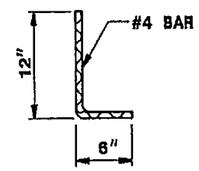

DOWEL

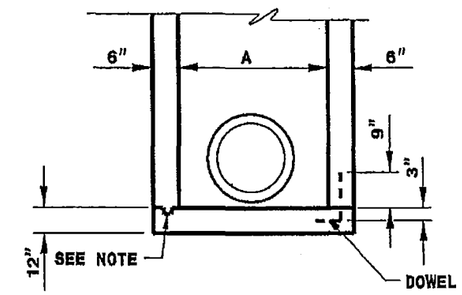

DETAIL 'B'

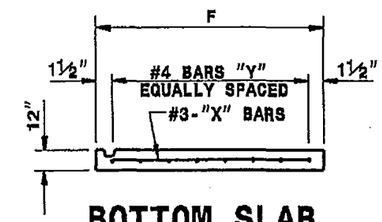

BOTTOM SLAB

TABLE "A"

MINIMUM DIMENSIONS FOR OUTLET CONTROL STRUCTURE

CONTROL STRUCT.	BASIN	PIPE D	OUTLET PIPE INVERT	BOX HEIGHT H1	TOP OF GRATE ELEV.	UNDER DRAIN INVERT	UNDERDRAIN PIPE D	POOL BASIN ELEV. @ ORFICE PAD	OUTLET PIPE SLUICE GATE
A	-Y2- STA 18+38.5,88' LT	12"	36.25	2.92	39.0	36.25	4"	37.6	12"
B	-Y2- STA 16+71,126.7' LT	24"	34.25	4.50	38.50	N/A	N/A	37.6	24"

CONTROL STRUCT.	PIPE D	"A"	BARS-X		BARS-Y		"F"	TOTAL CONCRETE QUANTITIES
			QTY.	LENGTH	QTY.	LENGTH		
A	12"	4'-0"	6	4'-9"	6	4'-9"	5'-0"	2.0 CU.YDS.
B	24"	4'-0"	6	4'-9"	6	4'-9"	5'-0"	2.5 CU.YDS.

GENERAL NOTES:

* CHANGES IN ELEVATIONS MUST BE APPROVED BY THE ENGINEER.
* CLASS 'B' CONCRETE TO BE USED THROUGHOUT. PRECAST CONCRETE STRUCTURES TO BE SUBMITTED FOR APPROVAL. USE STD 840.45.
* OPTIONAL CONSTRUCTION - MONOLITHIC POUR, 2 INCH KEYWAY, OR #4 BAR DOWELS AT 12 INCH CENTERS, AS DIRECTED BY THE ENGINEER.
* FORMS ARE TO BE USED FOR THE CONSTRUCTION OF THE BOTTOM SLAB.
* IF REINFORCED CONCRETE PIPE IS SET IN BASE SLAB OF BOX, ADD TO BASE AS SHOWN ON STANDARD 840.00.
* ALL DRAWDOWN STRUCTURES OVER 3 FEET IN DEPTH TO BE PROVIDED WITH STEPS 12 INCH ON CENTERS. STEPS SHALL BE INSTALLED IN ACCORDANCE WITH STANDARD 840.66.
* FOR 8'-0" IN HEIGHT OR LESS USE 6 INCH WALLS AND BOTTOM SLAB. OVER 8'-0" IN HEIGHT USE 12" WALLS TO 6'-0" FROM TOP OF WALL AND USE 6 INCH THICK WALLS FOR THE REMAINING 8'-0". ADJUST QUANTITIES ACCORDINGLY
* RETICULINE FRAME AND GRATE TO BE APPROVED BY THE ENGINEER.

PROJECT SERVICES UNIT
STANDARDS AND SPECIAL DESIGN
Office 919-250-4128 FAX 919-250-4119

DETAIL OF OUTLET CONTROL STRUCTURES A AND B

ORIGINAL BY: DATE:
MODIFIED BY: LWJ DATE: 7-20-09
CHECKED BY: DATE:
FILE SPEC.:

$$$$$SYSTIME$$$$$
$$$$$DGNFILE$$$$$
$$$$$USERNAME$$$$$

PROJECT REFERENCE NO.	SHEET NO.
K-3800	2-F
R/W SHEET NO.	
ROADWAY DESIGN ENGINEER	HYDRAULICS ENGINEER

Buffer Drawing
Sheet 7 of 10

PRELIMINARY PLANS
DO NOT USE FOR CONSTRUCTION

BUFFER IMPACTS PERMIT

BUFFER DRAWING SHEET 7 OF 10

DETAIL A
SPECIAL CUT GRASS SWALE
(Not to Scale)

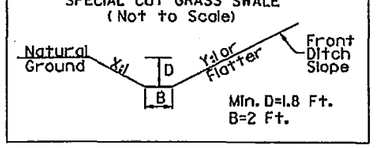

-Y1-STA. 11+00 LT. TO -L-STA. 10+75 LT., X=3, Y=4
-Y1-STA. 15+33 LT. TO -Y1-STA. 18+92 LT., X=5, Y=5

DETAIL B
SPECIAL CUT DITCH
(Not to Scale)

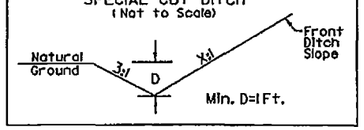

-L- STA. 10+75 TO STA. 11+50 LT., X=4
-L- STA. 10+75 TO STA. 11+22.5 RT., X=4
-Y1- STA. 22+08 TO STA. 22+54 RT., X=3

DETAIL C
SPECIAL LATERAL 'V' DITCH
(Not to Scale)

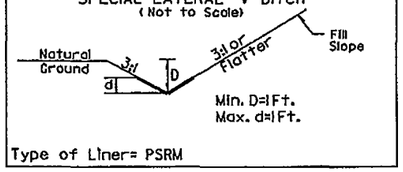

-L- STA. 19+13 TO STA. 19+36.74 LT.

DETAIL D
STANDARD 'V' DITCH
(Not to Scale)

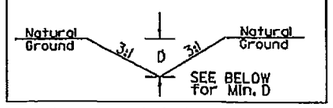

-Y1- STA. 18+37.49' TO STA. 18+54.38' RT.,
D=1.5', L=20', s=5.15%, DDE=40 CY
-Y1- STA. 18+97.6.45' TO STA. 18+97.4.55' LT.,
D=1.8', L=20', s=0.75%, DDE=11 CY

DETAIL E
SPECIAL LATERAL 'V' DITCH
(Not to Scale)

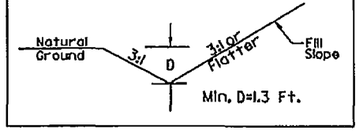

-L- STA. 19+36.74 TO STA. 21+00 LT.

DETAIL F
SPECIAL LATERAL GRASS SWALE
(Not to Scale)

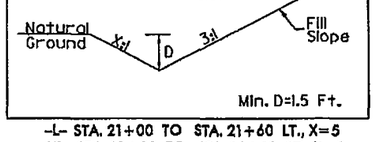

-L- STA. 21+00 TO STA. 21+60 LT., X=5
-Y1- STA. 12+00 TO STA. 16+50 RT., X=3
-Y1- STA. 18+63 TO STA. 19+50 RT., X=3

DETAIL G
SPECIAL CUT GRASS SWALE
(Not to Scale)

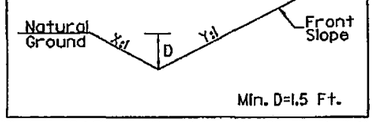

-Y1- STA. 10+92 RT. TO -Y1-STA. 12+00 RT., X=3, Y=4
-Y1- STA. 16+50 TO STA. 18+42 RT., X=3, Y=3
-Y1- STA. 19+50 TO STA. 22+08 RT., X=3, Y=3

DETAIL H
GRASS SWALE W/ EARTH BERM
(Not to Scale)

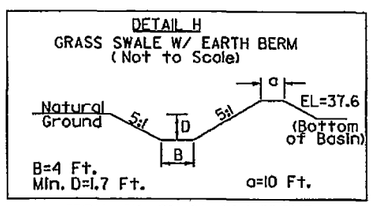

FROM -Y2- STA. 16+96.4, 99.9' LT.
TO -L- STA. 20+01.4, 116.7' RT.
TO -L- STA. 20+66.0, 106.6' RT.
L=110', S=0.3%, DDE=690 CUYDS

DETAIL I
RIP RAP AT EMBANKMENT
(Not to Scale)

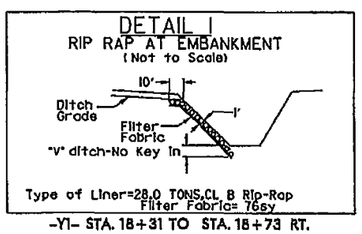

-Y1- STA. 18+31 TO STA. 18+73 RT.

PREFORMED SCOUR HOLE
*NOT TO SCALE

PLAN VIEW

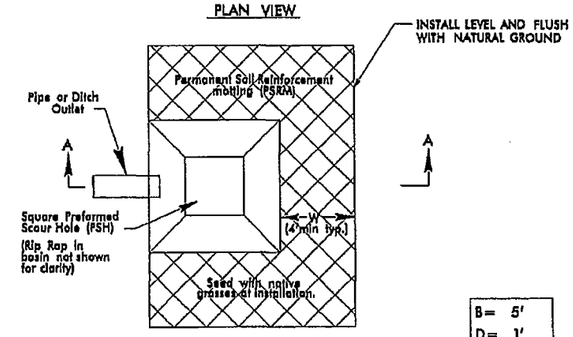

B=	5'
D=	1'
W=	4'

SECTION A-A

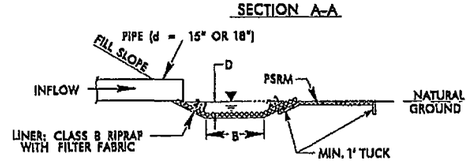

308

-L- STA. 19+00 RT., -L- STA. 22+50 LT., -L- STA. 23+84.84 LT.,
-Y2- STA. 16+27.7 LT.

DETAIL J
SPECIAL CUT GRASS SWALE w/HINGE
(Not to Scale)

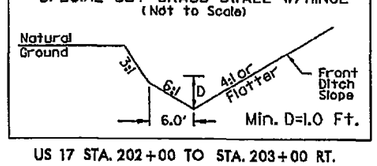

US 17 STA. 202+00 TO STA. 203+00 RT.

DETAIL K
STANDARD V GRASS SWALE
(Not to Scale)

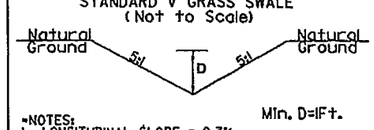

*NOTES:
1. LONGITUDINAL SLOPE = 0.3%
2. MODIFICATIONS MAY BE NEEDED, AS APPROVED BY ENGINEER.

-L- STA 20+80 RT, L=35'
-L- STA 26+77 RT, L=50'
-Y2- STA 18+20.56 LT, L=50'

8/17/99

2/28/2013
Hydraulics
E:\Hydraulics\HSDATA_Environmental\Drawings\K-3800_rdy_dft_2f.dgn

$$$$$$$SYSTIME$$$$$$$
$$$$$$$USERNAME$$$$$$$

8/17/99

PROJECT REFERENCE NO.	SHEET NO.
K-3800	2-G
R/W SHEET NO.	
ROADWAY DESIGN ENGINEER	HYDRAULICS ENGINEER

Buffer Drawing Sheet 8 of 10

PRELIMINARY PLANS
DO NOT USE FOR CONSTRUCTION

BUFFER IMPACTS PERMIT

BUFFER DRAWING SHEET 8 OF 10

BIORETENTION/HAZARDOUS SPILL BASIN

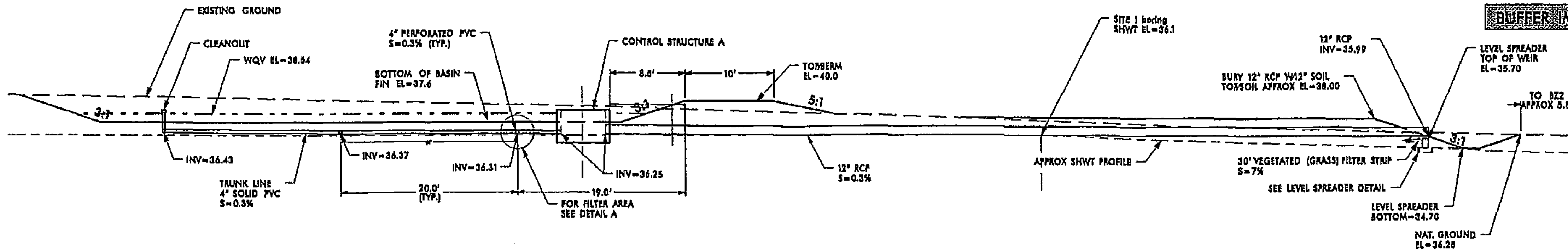

CROSS SECTION AT CONTROL STRUCTURE A

SCALE: HORIZ: 1"=10'
VERT: 1"=10'

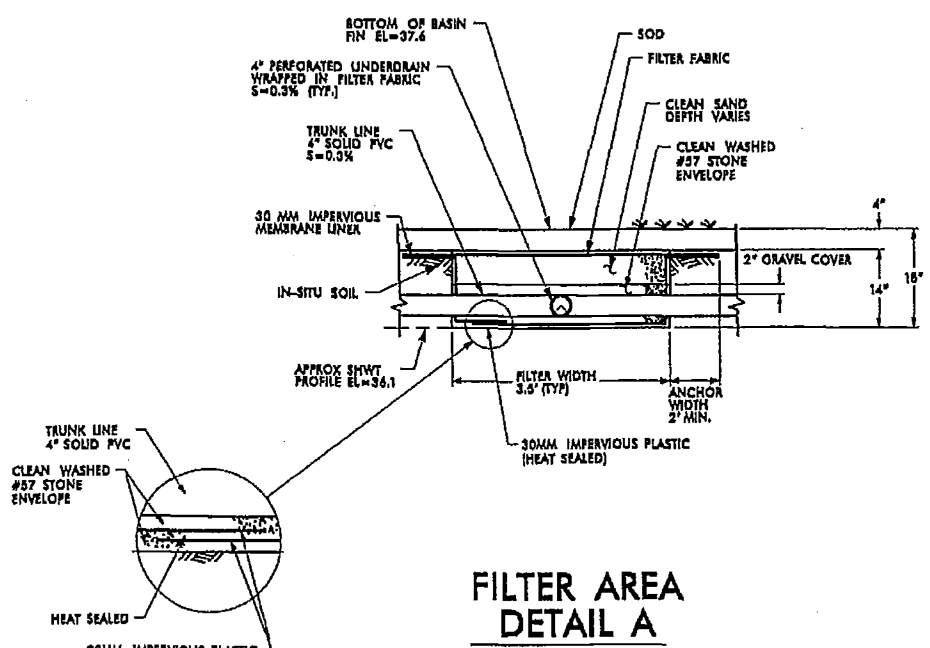

FILTER AREA DETAIL A

SCALE: HORIZ: 1"=2'
VERT: 1"=2'

NOTES:
1. 4" PERFORATED PIPE MINIMUM INLET AREA = 4.0sq in/ft
2. EDGE OF PLASTIC LINING SHOULD BE ANCHORED IN TO THE GROUND A MINIMUM OF 2.0'
3. IF A JOINT IN THE PLASTIC LINING IS REQUIRED, IT SHOULD BE HEAT SEALED TO PREVENT LEAKAGE.

END CLEANOUT

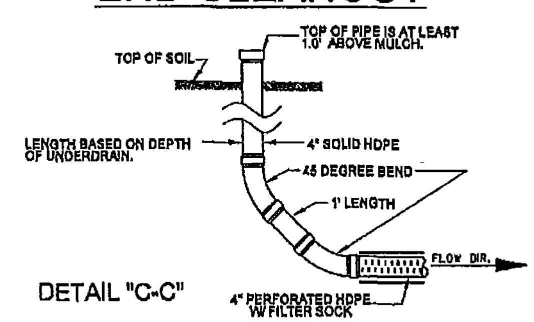

DETAIL "C-C"

NOTE: ONLY UNDERDRAIN PIPE SHOULD BE PERFORATED   *NOT TO SCALE

UNDERDRAIN TRANSITION INTO TRUNK LINE

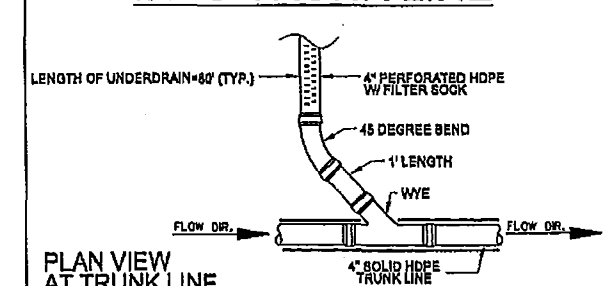

PLAN VIEW AT TRUNK LINE

NOTE: ONLY UNDERDRAIN PIPE SHOULD BE PERFORATED   *NOT TO SCALE

SAND SPECIFICATIONS

WASHED ASTM C33 OR AASHTO M-6 FINE AGGREGATE CONCRETE SAND. IN ADDITION TO THESE SPECIFICATIONS, SAND MUST MEET ALL THE FOLLOWING CONDITIONS:

1. SAND MUST BE SILICA BASED. NO LIMESTONE BASED PRODUCTS MAY BE USED. IF THE MATERIAL IS WHITE OR GRAY IN COLOR, IT IS PROBABLY NOT ACCEPTABLE.
2. SAND MUST BE CLEAN. NATURAL UNWASHED SAND DEPOSITS MAY NOT BE USED. LIKEWISE, SAND THAT HAS BECOME CONTAMINATED BY IMPROPER STORAGE OR INSTALLATION PRACTICES SHALL BE REJECTED.
3. MANUFACTURED SAND OR STONE DUST IS NOT ACCEPTABLE UNDER ANY CIRCUMSTANCES.

8/17/99

WALL LEVEL SPREADER DETAIL

(NOT TO SCALE)
FROM -Y2- STA. 17+11 TO STA. 17+15 LT.

BUFFER IMPACTS PERMIT

BUFFER DRAWING SHEET 9 OF 10

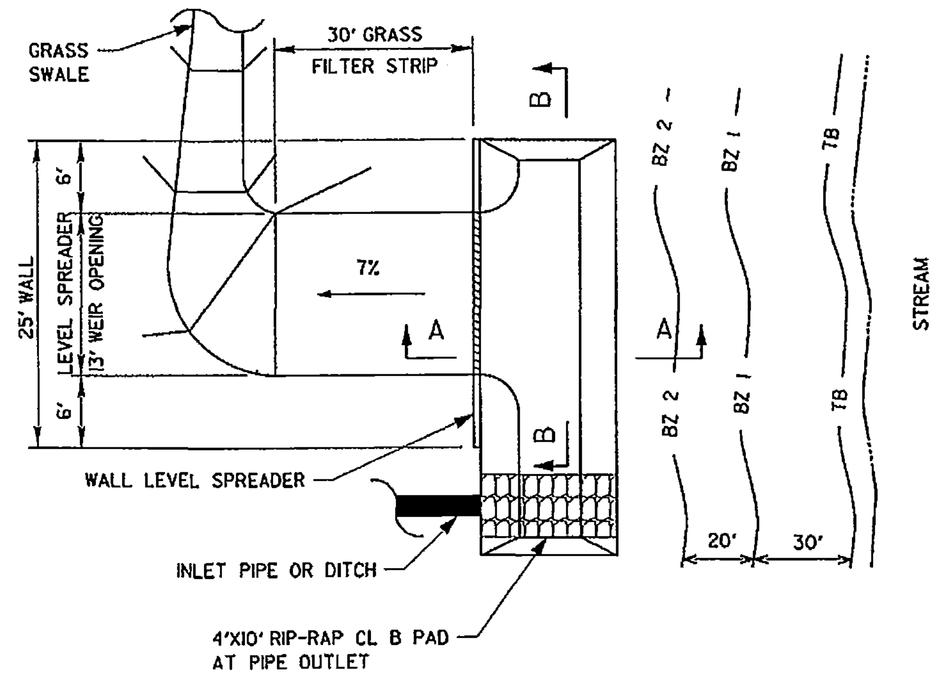

PLAN

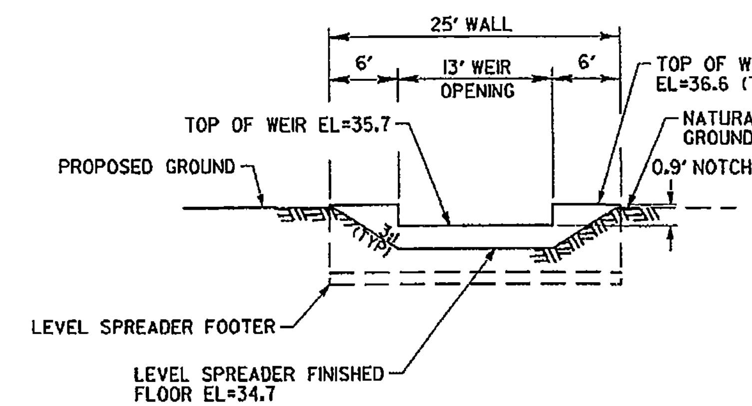

FACE OF WALL
SECTION-BB

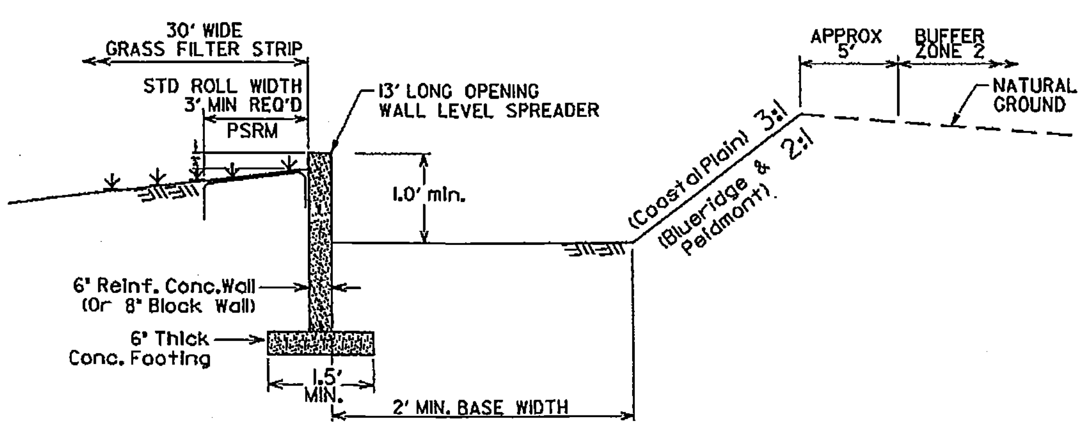

DDE=220 CY

SECTION-AA

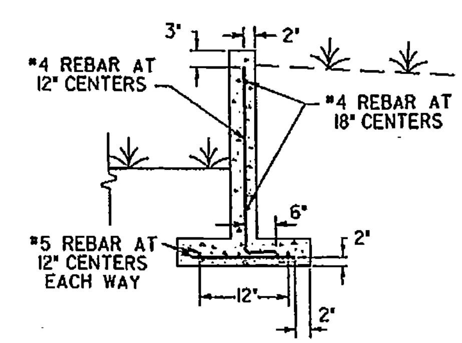

SECTION-AA
REINFORCEMENT

NOTES:

1. THE REINFORCING SHALL BE #4 BARS AT 12" CENTERS ALONG THE LENGTH OF THE WALL STEM AND #4 BARS AT 18" CENTERS FOR THE HEIGHT OF THE WALL.
2. THE BENT REBAR AT THE ENDS OF THE #4 BARS AT 18" CENTERS SHALL BE PLACED IN AN ALTERNATING PATTERN.
3. AT THE CORNERS OF THE CONNECTING WALL STEMS, THE #4 AT 12" CENTER REBARS ALONG THE LENGTH OF THE WALL SHALL BE BENT AND EXTENDED INTO THE WALLS BY 1'-4" TYPICAL.
4. FOR THE FOOTING ITSELF THE REINFORCING SHALL BE #5 BARS AT 12" CENTERS EACH WAY.
5. SEE NCDOT STANDARD 850.01 FOR USE IN CONSTRUCTING CONCRETE TROUGH.

BUFFER IMPACTS SUMMARY

			IMPACT									BUFFER REPLACEMENT	
			TYPE			ALLOWABLE			MITIGABLE				
SITE NO.	STRUCTURE SIZE / TYPE	STATION (FROM/TO)	ROAD CROSSING	BRIDGE	PARALLEL IMPACT	ZONE 1 (ft^2)	ZONE 2 (ft^2)	TOTAL (ft^2)	ZONE 1 (ft^2)	ZONE 2 (ft^2)	TOTAL (ft^2)	ZONE 1 (ft^2)	ZONE 2 (ft^2)
1	60" RCP	-Y2- 17+59	X			5304	3462	8766					
2	60" RCP	-L- 21+66	X			6717	4304	11021					
3	Roadway Fill in BZ 2	-Y2- 13+81 to 15+29, Rt			X					961	961		
TOTAL:						12,021	7,766	19,787	0	961	961		

N.C. DEPT. OF TRANSPORTATION
DIVISION OF HIGHWAYS

BEAUFORT COUNTY
PROJECT: 38748.1.1 (K-3800)

3/28/2013
SHEET 10 OF 10

Rev. May 2006

Buffer Drawing
Sheet 10 of 10

09/08/99

TIP PROJECT: K-3800

CONTRACT:

See Sheet 1-A For Index of Sheets
See Sheet 1-B For Conventional Symbols

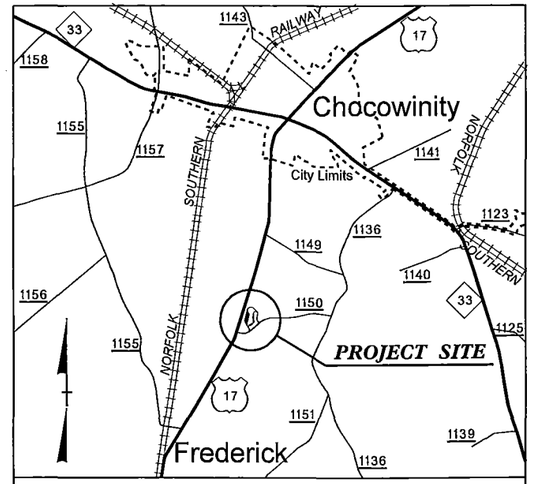

VICINITY MAP

STATE OF NORTH CAROLINA
DIVISION OF HIGHWAYS

BEAUFORT COUNTY

STATE	STATE PROJECT REFERENCE NO.	SHEET NO.	TOTAL SHEETS
N.C.	K-3800	1	

STATE PROJ. NO.	F.A. PROJ. NO.	DESCRIPTION
38748.1.1	NHS-17(32)	PE
38748.2.1	NHS-17(32)	ROW, UTIL

LOCATION: US 17 REST AREA

TYPE OF WORK: GRADING, PAVING, DRAINAGE, LIGHTING, REST AREA AND FACILITIES

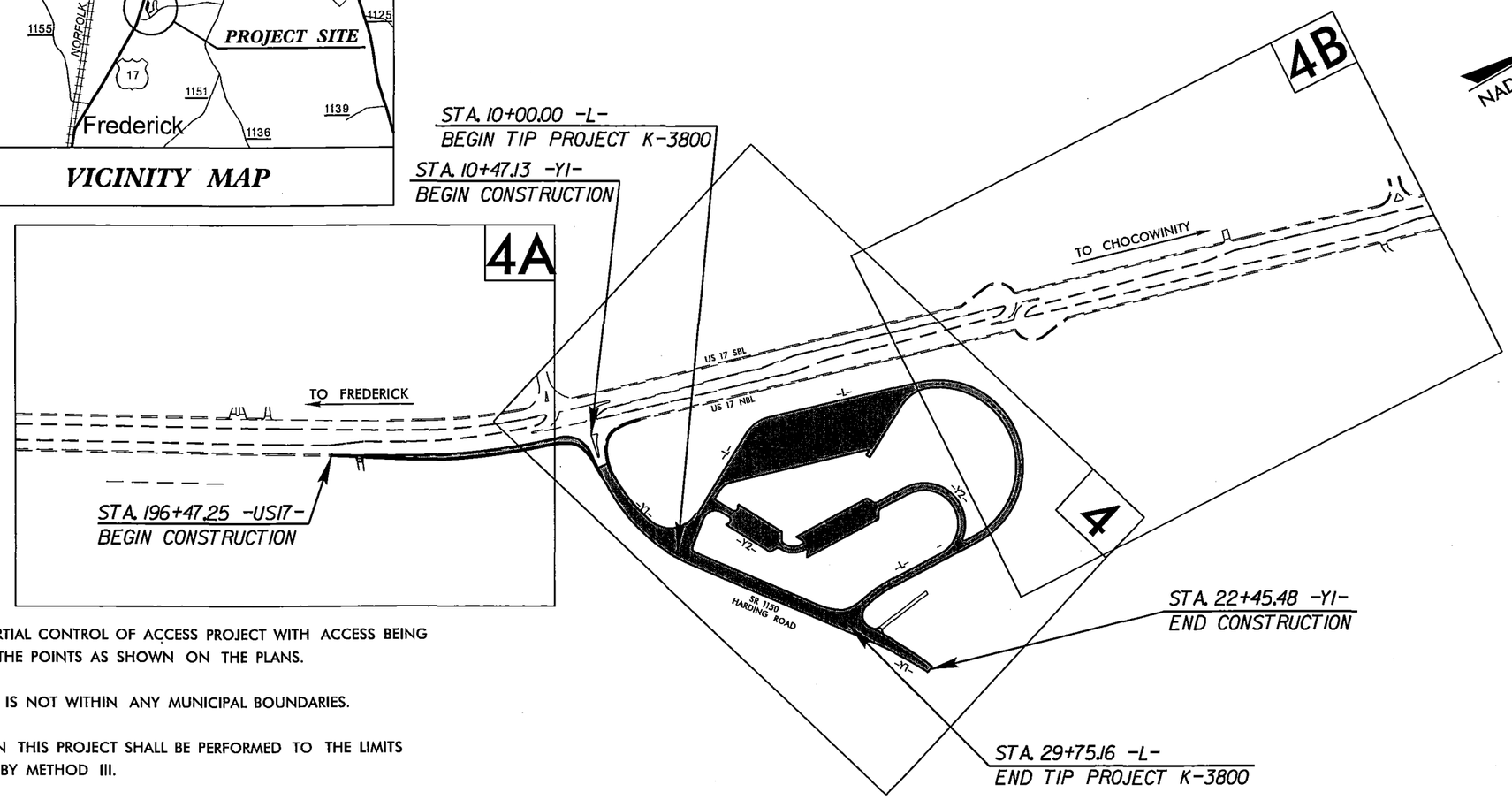

THIS IS A PARTIAL CONTROL OF ACCESS PROJECT WITH ACCESS BEING LIMITED TO THE POINTS AS SHOWN ON THE PLANS.

THIS PROJECT IS NOT WITHIN ANY MUNICIPAL BOUNDARIES.

CLEARING ON THIS PROJECT SHALL BE PERFORMED TO THE LIMITS ESTABLISHED BY METHOD III.

PRELIMINARY PLANS
DO NOT USE FOR CONSTRUCTION

GRAPHIC SCALES

50 25 0 50 100
PLANS

50 25 0 50 100
PROFILE (HORIZONTAL)

10 5 0 10 20
PROFILE (VERTICAL)

DESIGN DATA

ADT 2011 = 864
ADT 2031 = 1,352
DHV = N/A %
D = N/A%
T = 12 %
V = 20 MPH

PROJECT LENGTH

LENGTH ROADWAY TIP PROJECT K-3800 = 0.374 MILES
TOTAL LENGTH TIP PROJECT K-3800 = 0.374 MILES

Prepared In the Office of:
DIVISION OF HIGHWAYS
1000 Birch Ridge Dr., Raleigh NC, 27610

2006 STANDARD SPECIFICATIONS

RIGHT OF WAY DATE:
NOVEMBER 20, 2009

LETTING DATE:
AUGUST 20, 2013

BRENDA MOORE, P.E.
PROJECT ENGINEER

THAD F. DUNCAN, P.E.
PROJECT DESIGN ENGINEER

HYDRAULICS ENGINEER

SIGNATURE: P.E.

ROADWAY DESIGN ENGINEER

SIGNATURE: P.E.

DIVISION OF HIGHWAYS
STATE OF NORTH CAROLINA

STATE OF NORTH CAROLINA DEPARTMENT OF TRANSPORTATION

P.E.
STATE HIGHWAY DESIGN ENGINEER

23-JAN-2013 15:27
f:\rocowx\projects\k3800_rdy_tsh.dgn
$$$$USERNAME$$$$

09/08/09

PROJECT REFERENCE NO.	SHEET NO.
K-3800	1-B

Note: Not to Scale

**S.U.E. = Subsurface Utility Engineering*

STATE OF NORTH CAROLINA
DIVISION OF HIGHWAYS

CONVENTIONAL PLAN SHEET SYMBOLS

BOUNDARIES AND PROPERTY:

- State Line
- County Line
- Township Line
- City Line
- Reservation Line
- Property Line
- Existing Iron Pin — EIP
- Property Corner
- Property Monument — ECM
- Parcel/Sequence Number — 123
- Existing Fence Line
- Proposed Woven Wire Fence
- Proposed Chain Link Fence
- Proposed Barbed Wire Fence
- Existing Wetland Boundary — WLB
- Proposed Wetland Boundary — WLB
- Existing Endangered Animal Boundary — EAB
- Existing Endangered Plant Boundary — EPB

BUILDINGS AND OTHER CULTURE:

- Gas Pump Vent or U/G Tank Cap
- Sign — S
- Well — W
- Small Mine
- Foundation
- Area Outline
- Cemetery
- Building
- School
- Church
- Dam

HYDROLOGY:

- Stream or Body of Water
- Hydro, Pool or Reservoir
- Jurisdictional Stream — JS
- Buffer Zone 1 — BZ 1
- Buffer Zone 2 — BZ 2
- Flow Arrow
- Disappearing Stream
- Spring
- Wetland
- Proposed Lateral, Tail, Head Ditch — FLOW
- False Sump

RAILROADS:

- Standard Gauge — CSX TRANSPORTATION
- RR Signal Milepost — MILEPOST 35
- Switch — SWITCH
- RR Abandoned
- RR Dismantled

RIGHT OF WAY:

- Baseline Control Point
- Existing Right of Way Marker
- Existing Right of Way Line
- Proposed Right of Way Line
- Proposed Right of Way Line with Iron Pin and Cap Marker
- Proposed Right of Way Line with Concrete or Granite Marker
- Existing Control of Access — CA
- Proposed Control of Access — CA
- Existing Easement Line — E
- Proposed Temporary Construction Easement — E
- Proposed Temporary Drainage Easement — TDE
- Proposed Permanent Drainage Easement — PDE
- Proposed Permanent Drainage / Utility Easement — DUE
- Proposed Permanent Utility Easement — PUE
- Proposed Temporary Utility Easement — TUE
- Proposed Permanent Easement with Iron Pin and Cap Marker

ROADS AND RELATED FEATURES:

- Existing Edge of Pavement
- Existing Curb
- Proposed Slope Stakes Cut — C
- Proposed Slope Stakes Fill — F
- Proposed Wheel Chair Ramp — WCR
- Existing Metal Guardrail
- Proposed Guardrail
- Existing Cable Guiderail
- Proposed Cable Guiderail
- Equality Symbol
- Pavement Removal

VEGETATION:

- Single Tree
- Single Shrub
- Hedge
- Woods Line
- Orchard
- Vineyard — Vineyard

EXISTING STRUCTURES:

MAJOR:

- Bridge, Tunnel or Box Culvert — CONC
- Bridge Wing Wall, Head Wall and End Wall — CONC WW

MINOR:

- Head and End Wall — CONC HW
- Pipe Culvert
- Footbridge
- Drainage Box: Catch Basin, DI or JB — CB
- Paved Ditch Gutter
- Storm Sewer Manhole — S
- Storm Sewer — S

UTILITIES:

POWER:

- Existing Power Pole
- Proposed Power Pole
- Existing Joint Use Pole
- Proposed Joint Use Pole
- Power Manhole — P
- Power Line Tower
- Power Transformer
- U/G Power Cable Hand Hole — HH
- H-Frame Pole
- Recorded U/G Power Line — P
- Designated U/G Power Line (S.U.E.*) — P

TELEPHONE:

- Existing Telephone Pole
- Proposed Telephone Pole
- Telephone Manhole — T
- Telephone Booth
- Telephone Pedestal — T
- Telephone Cell Tower
- U/G Telephone Cable Hand Hole — HH
- Recorded U/G Telephone Cable — T
- Designated U/G Telephone Cable (S.U.E.*) — T
- Recorded U/G Telephone Conduit — TC
- Designated U/G Telephone Conduit (S.U.E.*) — TC
- Recorded U/G Fiber Optics Cable — T FO
- Designated U/G Fiber Optics Cable (S.U.E.*) — T FO

WATER:

- Water Manhole — W
- Water Meter
- Water Valve
- Water Hydrant
- Recorded U/G Water Line — W
- Designated U/G Water Line (S.U.E.*) — W
- Above Ground Water Line — A/G Water

TV:

- TV Satellite Dish
- TV Pedestal — C
- TV Tower
- U/G TV Cable Hand Hole — HH
- Recorded U/G TV Cable — TV
- Designated U/G TV Cable (S.U.E.*) — TV
- Recorded U/G Fiber Optic Cable — TV FO
- Designated U/G Fiber Optic Cable (S.U.E.*) — TV FO

GAS:

- Gas Valve
- Gas Meter
- Recorded U/G Gas Line — G
- Designated U/G Gas Line (S.U.E.*) — G
- Above Ground Gas Line — A/G Gas

SANITARY SEWER:

- Sanitary Sewer Manhole
- Sanitary Sewer Cleanout
- U/G Sanitary Sewer Line — SS
- Above Ground Sanitary Sewer — A/G Sanitary Sewer
- Recorded SS Forced Main Line — FSS
- Designated SS Forced Main Line (S.U.E.*) — FSS

MISCELLANEOUS:

- Utility Pole
- Utility Pole with Base
- Utility Located Object
- Utility Traffic Signal Box — S
- Utility Unknown U/G Line — ?UTL
- U/G Tank; Water, Gas, Oil
- A/G Tank; Water, Gas, Oil
- U/G Test Hole (S.U.E.*)
- Abandoned According to Utility Records — AATUR
- End of Information — E.O.I.

PROJECT REFERENCE NO.	SHEET NO.
K-3800	2
ROADWAY DESIGN ENGINEER	PAVEMENT DESIGN ENGINEER

PRELIMINARY PLANS
DO NOT USE FOR CONSTRUCTION

PAVEMENT SCHEDULE

(PRELIMINARY PAVEMENT DESIGN)

C1	PROP. APPROX. 3" ASPHALT CONCRETE SURFACE COURSE, TYPE S9.5B, AT AN AVERAGE RATE OF 168 LBS. PER SQ. YD. IN EACH OF TWO LAYERS.
C2	PROP. APPROX. 3" ASPHALT CONCRETE SURFACE COURSE, TYPE S9.5C, AT AN AVERAGE RATE OF 168 LBS. PER SQ. YD. IN EACH OF TWO LAYERS.
C3	PROP. VAR. DEPTH ASPHALT CONCRETE SURFACE COURSE, TYPE S9.5B, AT AN AVERAGE RATE OF 112 LBS. PER SQ. YD. PER 1" DEPTH. TO BE PLACED IN LAYERS NOT TO EXCEED 2" IN DEPTH.
C4	PROP. VAR. DEPTH ASPHALT CONCRETE SURFACE COURSE, TYPE S9.5C, AT AN AVERAGE RATE OF 112 LBS. PER SQ. YD. PER 1" DEPTH. TO BE PLACED IN LAYERS NOT TO EXCEED 2" IN DEPTH.
D1	PROP. APPROX. 2½" ASPHALT CONCRETE INTERMEDIATE COURSE, TYPE I19.0B, AT AN AVERAGE RATE OF 285 LBS. PER SQ. YD.
D2	PROP. APPROX. 3½" ASPHALT CONCRETE INTERMEDIATE COURSE, TYPE I19.0C, AT AN AVERAGE RATE OF 399 LBS. PER SQ. YD.
D3	PROP. VAR. DEPTH ASPHALT CONCRETE INTERMEDIATE COURSE, TYPE I19.0B, AT AN AVERAGE RATE OF 114 LBS. PER SQ. YD. PER 1" DEPTH, TO BE PLACED IN LAYERS NOT LESS THAN 2½" IN DEPTH OR GREATER THAN 4" IN DEPTH.
D4	PROP. VAR. DEPTH ASPHALT CONCRETE INTERMEDIATE COURSE, TYPE I19.0C, AT AN AVERAGE RATE OF 114 LBS. PER SQ. YD. PER 1" DEPTH, TO BE PLACED IN LAYERS NOT LESS THAN 2½" IN DEPTH OR GREATER THAN 4" IN DEPTH.
E1	PROP. APPROX. 5½" ASPHALT CONCRETE BASE COURSE, TYPE B25.0C, AT AN AVERAGE RATE OF 627 LBS. PER SQ. YD.
E2	PROP. VAR. DEPTH ASPHALT CONCRETE BASE COURSE, TYPE B25.0C, AT AN AVERAGE RATE OF 114 LBS. PER SQ. YD. PER 1" DEPTH. TO BE PLACED IN LAYERS NOT LESS THAN 3" IN DEPTH OR GREATER THAN 5½" IN DEPTH.
J1	PROP. 8" AGGREGATE BASE COURSE.
J2	PROP. VAR. DEPTH AGGREGATE BASE COURSE.
S	4" CONCRETE SIDEWALK.
R1	2'-6" CONCRETE CURB AND GUTTER.
T	EARTH MATERIAL.
U	EXISTING PAVEMENT.
W	VARIABLE DEPTH ASPHALT PAVEMENT (SEE WEDGING DETAIL)

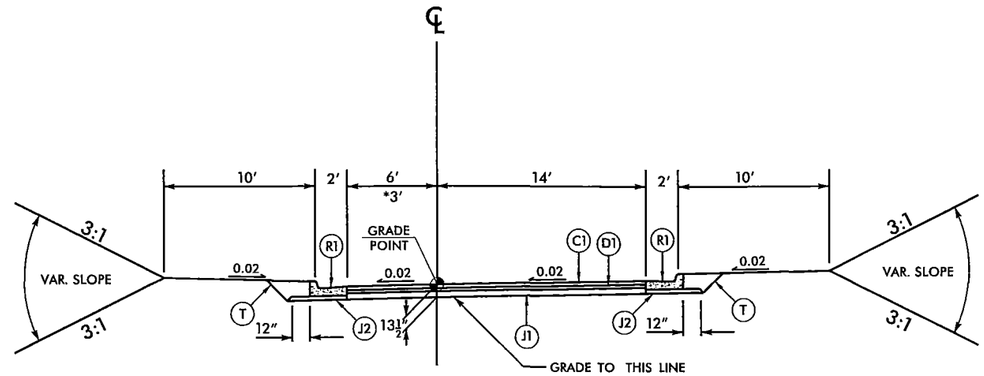

TYPICAL SECTION NO. 1

USE TYPICAL SECTION NO. 1

–L– STA. 10+18.02 TO –L– STA. 11+14.38 TRANSITION FROM EXIST.
–L– STA. 11+14.38 TO –L– STA. 12+03.04
–L– STA. 18+99.81 TO –L– STA. 28+88.02
–L– STA. 28+88.02 TO –L– STA. 29+56.53 TRANSITION TO EXIST.
–Y2– STA. 10+14.00 TO –Y2– STA. 10+73.49
*–Y2– STA. 12+43.68 TO –Y2– STA. 12+96.06
–Y2– STA. 15+36.77 TO –Y2– STA. 19+06.72

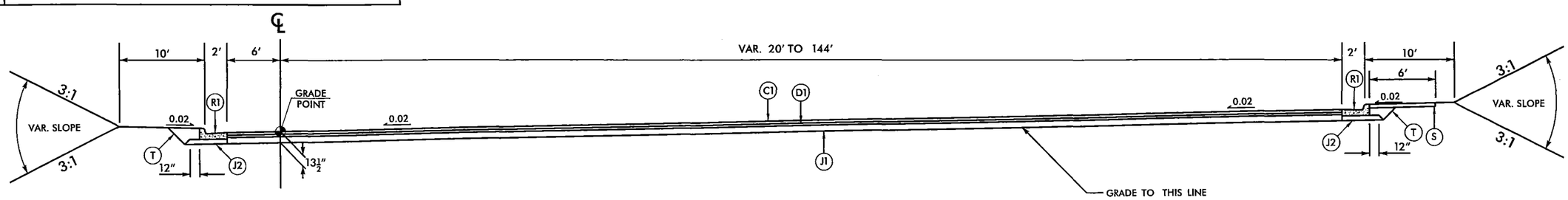

TYPICAL SECTION NO. 2

USE TYPICAL SECTION NO. 2

–L– STA. 12+03.04 TO –L– STA. 18+99.81

6/2/99

23-JAN-2013 15:27
z:\roadway\k3800_rdy_typ.dgn
$$$$USERNAME$$$$

PROJECT REFERENCE NO.	SHEET NO.
K-3800	2-A
ROADWAY DESIGN ENGINEER	PAVEMENT DESIGN ENGINEER

PRELIMINARY PLANS
DO NOT USE FOR CONSTRUCTION

PAVEMENT SCHEDULE (PRELIMINARY PAVEMENT DESIGN)	
C1	3" S9.5B
C2	3" S9.5C
D1	2½" I19.0B
D2	3½" I19.0C
E1	5½" B25.0C
J1	8" ABC
J2	VAR. ABC
S	SIDEWALK
R1	2'-6" C & G
T	EARTH MATERIAL

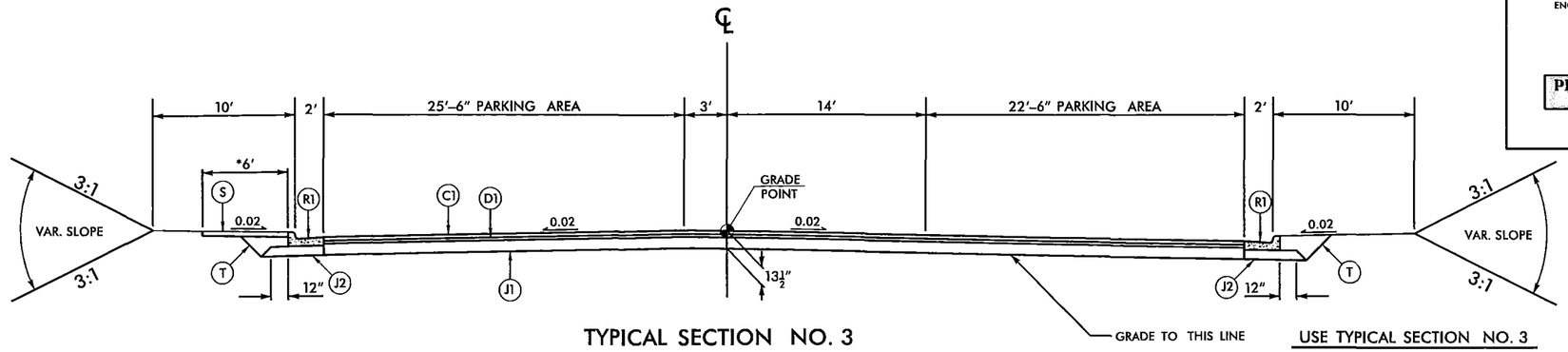

TYPICAL SECTION NO. 3

USE TYPICAL SECTION NO. 3

–Y2– STA. 10+73.49 TO –Y2– STA. 12+43.68

–Y2– STA. 12+96.06 TO –Y2– STA. 15+36.77

* USE 9' CONCRETE SIDEWALK FOR HANDICAP ACCESS
–Y2– STA. 12+77.15 TO –Y2– STA. 13+59.18

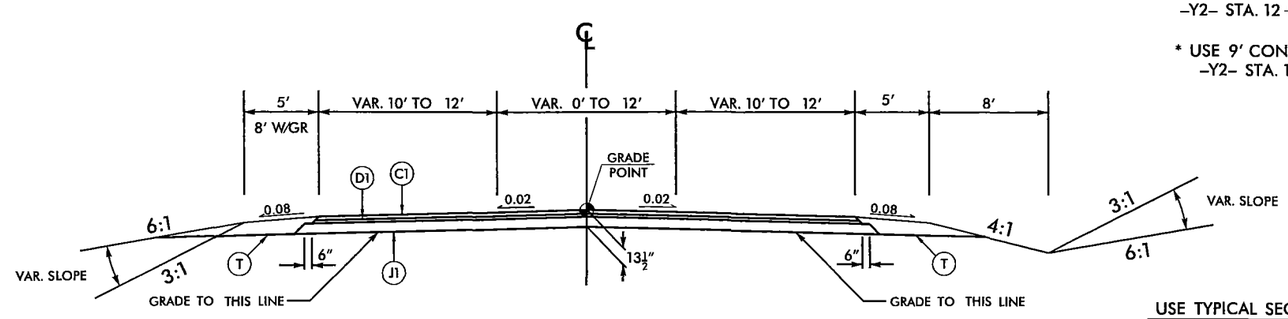

TYPICAL SECTION NO. 4

USE TYPICAL SECTION NO. 4

–Y1– STA. 11+51.53 TO –Y1– STA. 14+22.73 TAPER FROM EXIST.
–Y1– STA. 14+22.73 TO –Y1– STA. 20+45.48
–Y1– STA. 20+45.48 TO –Y1– STA. 22+45.48 TAPER TO EXIST.

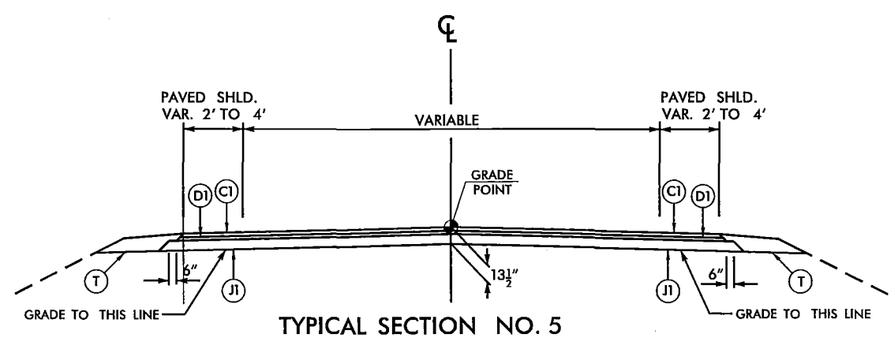

TYPICAL SECTION NO. 5

USE TYPICAL SECTION NO. 5

–Y1– STA. 10+47.13 TO –Y1– STA. 11+51.53

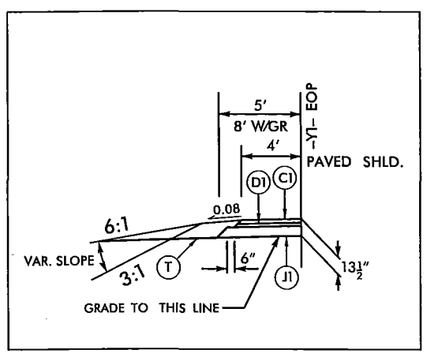

INSET NO. 1

USE WITH TYPICAL SECTION NO. 4
–Y1– STA. 11+51.53 LT TO –Y1– STA. 15+33.99 LT

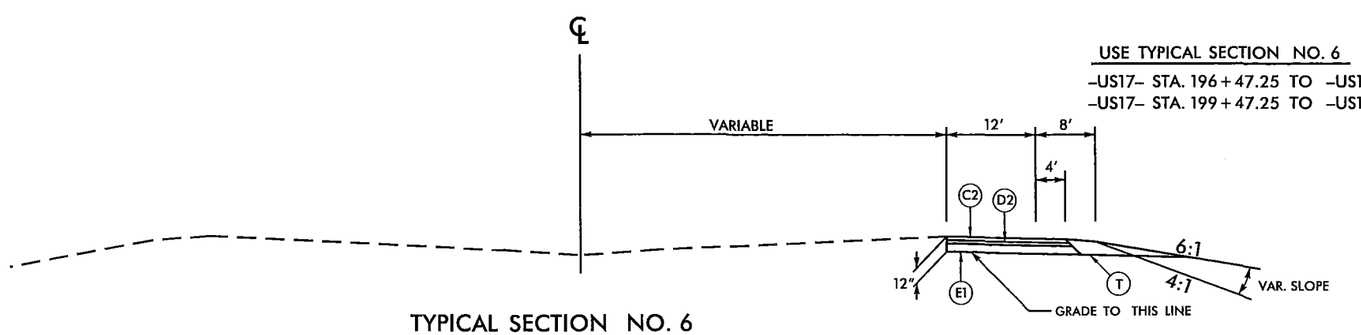

TYPICAL SECTION NO. 6

USE TYPICAL SECTION NO. 6

–US17– STA. 196+47.25 TO –US17– STA. 199+47.25 TAPER FROM EXIST.
–US17– STA. 199+47.25 TO –US17– STA. 202+47.25

6/2/99

23-JAN-2013 15:27
C:\Users\jpcrawford\Appdata\Local\Temp\AcPublish_6664\k3800_rdy_typ.dgn

PROJECT REFERENCE NO.	SHEET NO.
K-3800	2-B
R/W SHEET NO.	
ROADWAY DESIGN ENGINEER	HYDRAULICS ENGINEER

INCOMPLETE PLANS
DO NOT USE FOR R/W ACQUISITION
PRELIMINARY PLANS
DO NOT USE FOR CONSTRUCTION

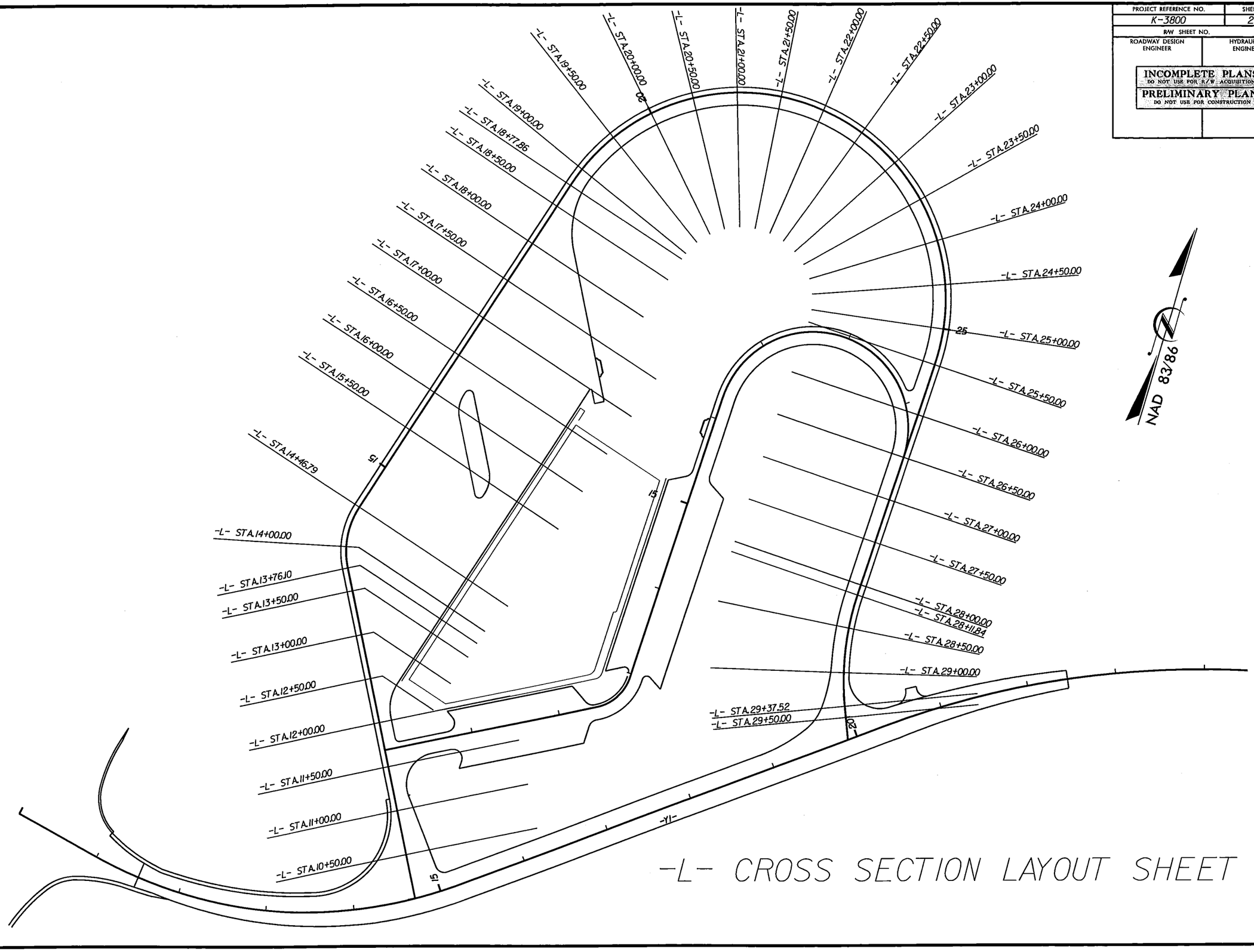

-L- CROSS SECTION LAYOUT SHEET

8/17/99

23-JAN-2013 15:27
r:\proj\k3800_rdy_dtl_2b.dgn
essingerpw:essingerpw

PROJECT REFERENCE NO.	SHEET NO.
K-3800	2-F
R/W SHEET NO.	
ROADWAY DESIGN ENGINEER	HYDRAULICS ENGINEER

PRELIMINARY PLANS
DO NOT USE FOR CONSTRUCTION

8/17/99

DETAIL A
SPECIAL CUT GRASS SWALE
(Not to Scale)

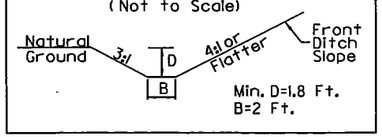

-Y1- STA. 11+00 LT. TO -L- STA. 10+75 LT.
-Y1- STA. 15+33 LT. TO STA. 18+91 LT.

DETAIL B
SPECIAL CUT DITCH
(Not to Scale)

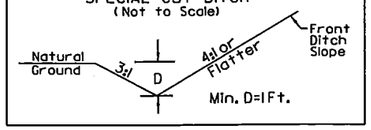

-L- STA. 10+75 TO STA. 11+50 LT.
-L- STA. 10+75 TO STA. 11+22.5 RT.
-Y1- STA. 22+08 TO STA. 22+54 RT. 3:1, 3:1 Side slopes

DETAIL C
SPECIAL LATERAL 'V' DITCH
(Not to Scale)

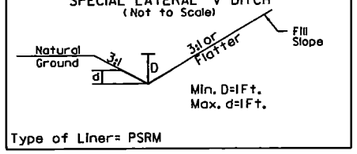

-L- STA. 19+13 TO STA. 19+36.74 LT.

DETAIL D
STANDARD 'V' DITCH
(Not to Scale)

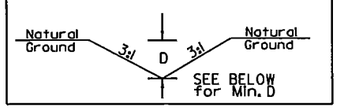

-Y1- STA. 18+37, 49' TO STA. 18+54, 38' RT.,
D=1.5', L=20', s=5.15%, DDE=40 CY
-Y1- STA. 18+97.6, 35' TO STA. 18+97.4, 55' LT.,
D=1.8', L=20', s=0.75%, DDE=11 CY

DETAIL E
SPECIAL LATERAL 'V' DITCH
(Not to Scale)

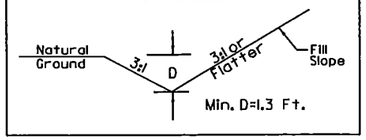

-L- STA. 19+36.74 TO STA. 21+00 LT.

DETAIL F
SPECIAL LATERAL GRASS SWALE
(Not to Scale)

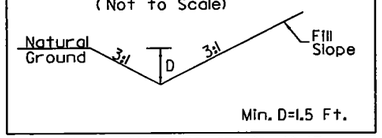

-L- STA. 21+00 TO STA. 21+60 LT.
-Y1- STA. 11+00 TO STA. 18+42 RT.
-Y1- STA. 18+63 TO STA. 19+50 RT.

DETAIL G
SPECIAL CUT GRASS SWALE
(Not to Scale)

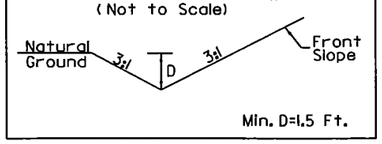

-Y1- STA. 16+50 TO STA. 18+42 RT.
-Y1- STA. 19+50 TO STA. 22+08 RT.

DETAIL H
GRASS SWALE W/ EARTH BERM
(Not to Scale)

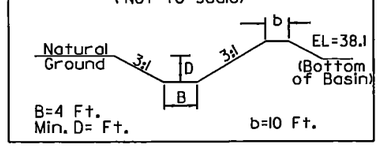

FROM -Y2- STA. 16+67, 42.7' LT.
TO -L- STA. 19+77.6', 102.2' RT
TO -L- STA. 20+40.4', 94' RT
L=198', S=0.65%, DDE=700 CUYDS

PREFORMED SCOUR HOLE
*NOT TO SCALE

PLAN VIEW

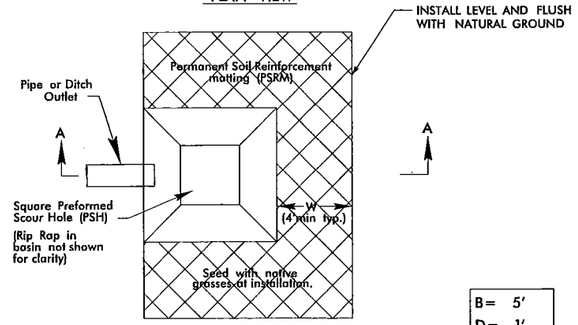

B= 5'
D= 1'
W= 4'

SECTION A-A

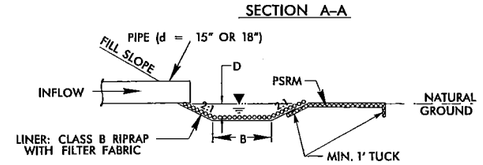

3/08

-L- STA. 19+00 RT., -L- STA. 22+50 LT., -L- STA. 23+84.84 LT., -L- STA. 26+77 RT.,
-Y2- STA. 18+20.56 LT.

DETAIL I
RIP RAP AT EMBANKMENT
(Not to Scale)

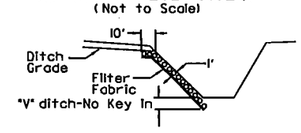

Type of Liner=28.0 TONS,CL. B Rip-Rap
Filter Fabric= 76sy

-Y1- STA. 18+31 TO STA. 18+73 RT.

DETAIL J
SPECIAL CUT GRASS SWALE w/HINGE
(Not to Scale)

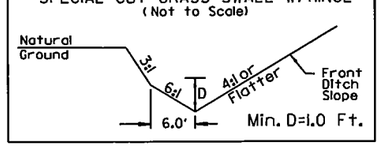

US 17 STA. 202+00 TO STA. 203+00 RT.

23-JAN-2013 15:27
K:\STIPP\DGNS\K-3800_rdy_dtl2f.dgn
$$$$USERNAME$$$$

PROJECT REFERENCE NO.	SHEET NO.
K-3800	4A
R/W SHEET NO.	
ROADWAY DESIGN ENGINEER	HYDRAULICS ENGINEER

PRELIMINARY PLANS
DO NOT USE FOR CONSTRUCTION

NAD 83/95

-US17-

PIs Sta 198+55.77	PI Sta 200+49.67
θs = 3°00' 28.9"	Δ = 8°19' 10.0" (LT)
Ls = 189.00'	D = 3°10' 59.2"
LT = 126.02'	L = 261.36'
ST = 63.02'	T = 130.91'
	R = 1,800.00'
	SE= SEE PLANS

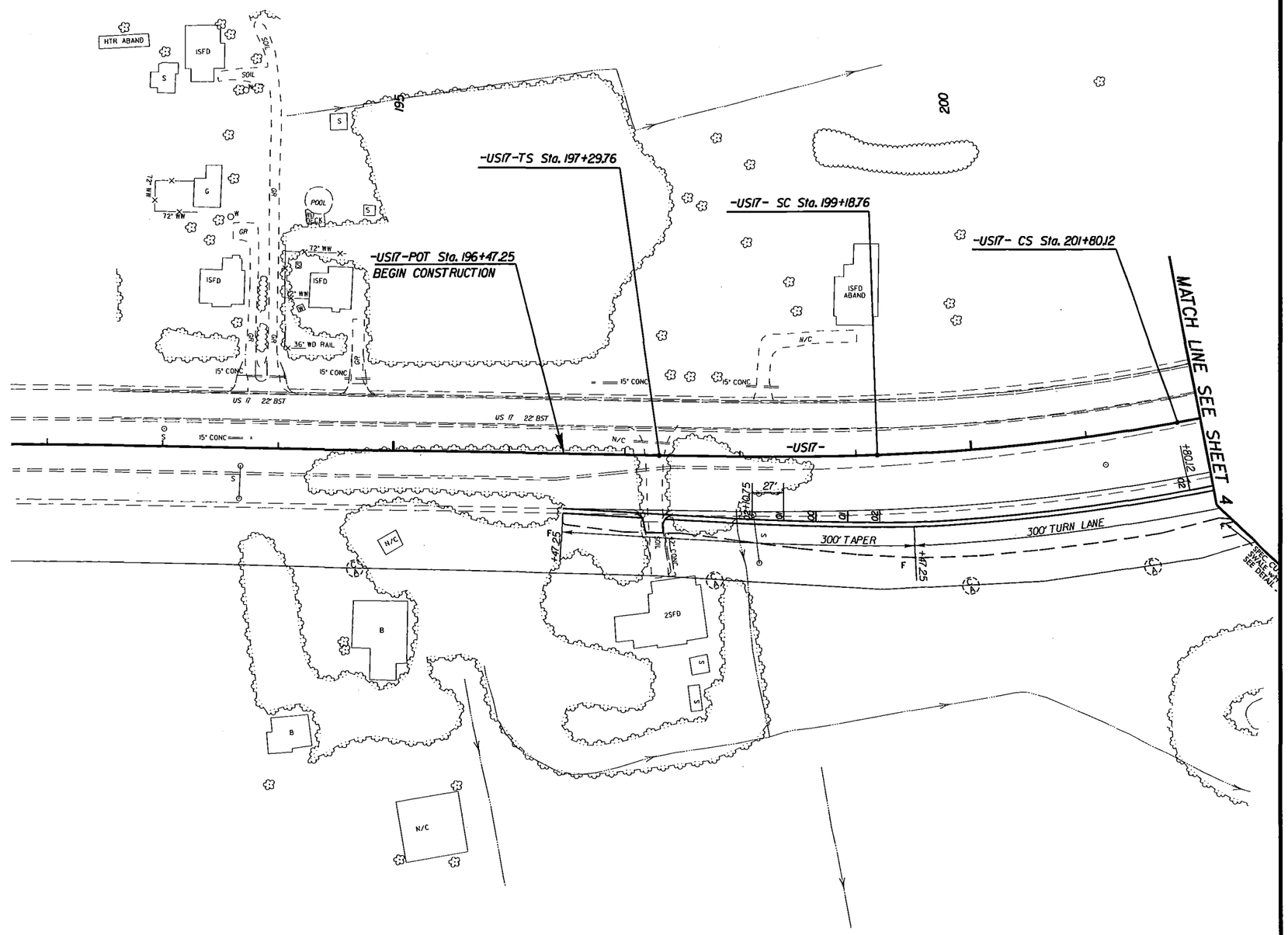

8/17/99

23-JAN-2013 15:27
R:\Active Projects\k_3800_rdy_psh4a.dgn
$$$$USERNAME$$$$

8/17/99

PROJECT REFERENCE NO.	SHEET NO.
K-3800	4
R/W SHEET NO.	
ROADWAY DESIGN ENGINEER	HYDRAULICS ENGINEER

PRELIMINARY PLANS
DO NOT USE FOR CONSTRUCTION

-L-

PI Sta 14+13.38	PI Sta 36+54.01	PI Sta 28+75.62
Δ = 45° 00' 20.0" (RT)	Δ = 165° 14' 35.9" (RT)	Δ = 24° 00' 09.0" (LT)
D = 63° 39' 43.1"	D = 24° 54' 40.4"	D = 19° 05' 54.9"
L = 70.69'	L = 663.33'	L = 125.68'
T = 37.28'	T = 1,776.16'	T = 63.77'
R = 90.00'	R = 230.00'	R = 300.00'
SE= SEE PLANS	SE= 02	SE= SEE PLANS
RO= SEE PLANS	RO= SEE PLANS	RO= SEE PLANS

-Y1-

PI Sta 13+24.30	PI Sta 23+76.02
Δ = 49° 26' 44.9" (LT)	Δ = 37° 03' 50.6" (RT)
D = 11° 41' 34.9"	D = 5° 33' 45.7"
L = 422.87'	L = 666.30'
T = 225.61'	T = 345.27'
R = 490.00'	R = 1,030.00'
SE= 06	SE= 06
RO = 126'	RO = 150'

-Y2-

PI Sta 12+72.63	PI Sta 16+51.25	PI Sta 21+13.28
Δ = 60° 06' 48.3" (LT)	Δ = 27° 50' 46.3" (RT)	Δ = 152° 24' 47.7" (RT)
D = 114° 35' 29.6"	D = 52° 05' 13.5"	D = 53° 32' 50.8"
L = 52.46'	L = 53.46'	L = 284.63'
T = 28.93'	T = 27.27'	T = 435.84'
R = 50.00'	R = 110.00'	R = 107.00'
SE= SEE PLANS	SE= SEE PLANS	SE= SEE PLANS

-US 17-

PI Sta 200+49.67	PIs Sta 202+43.14
Δ = 8° 19' 10.0" (LT)	Θs = 3° 00' 28.9"
D = 3° 10' 59.2"	Ls = 189.00'
L = 261.36'	LT = 126.02'
T = 130.91'	ST = 63.02'
R = 1,800.00'	
SE= SEE PLANS	

SPECIAL CUT GRASS SWALE w/HINGE
(Not to Scale)

Natural Ground; 3:1; 4:1 or Flatter; Front Ditch Slope; 6.0'; Min. D=1.0 Ft.

US 17 STA. 202+00 TO STA. 203+00 RT.

11,800 / 18,600 — 11,900 / 18,800
US 17 — US 17
100 / 200 — 200 / 400
200 / 500
ADT 2011 / 2031
HARDING RD (SR 1150)

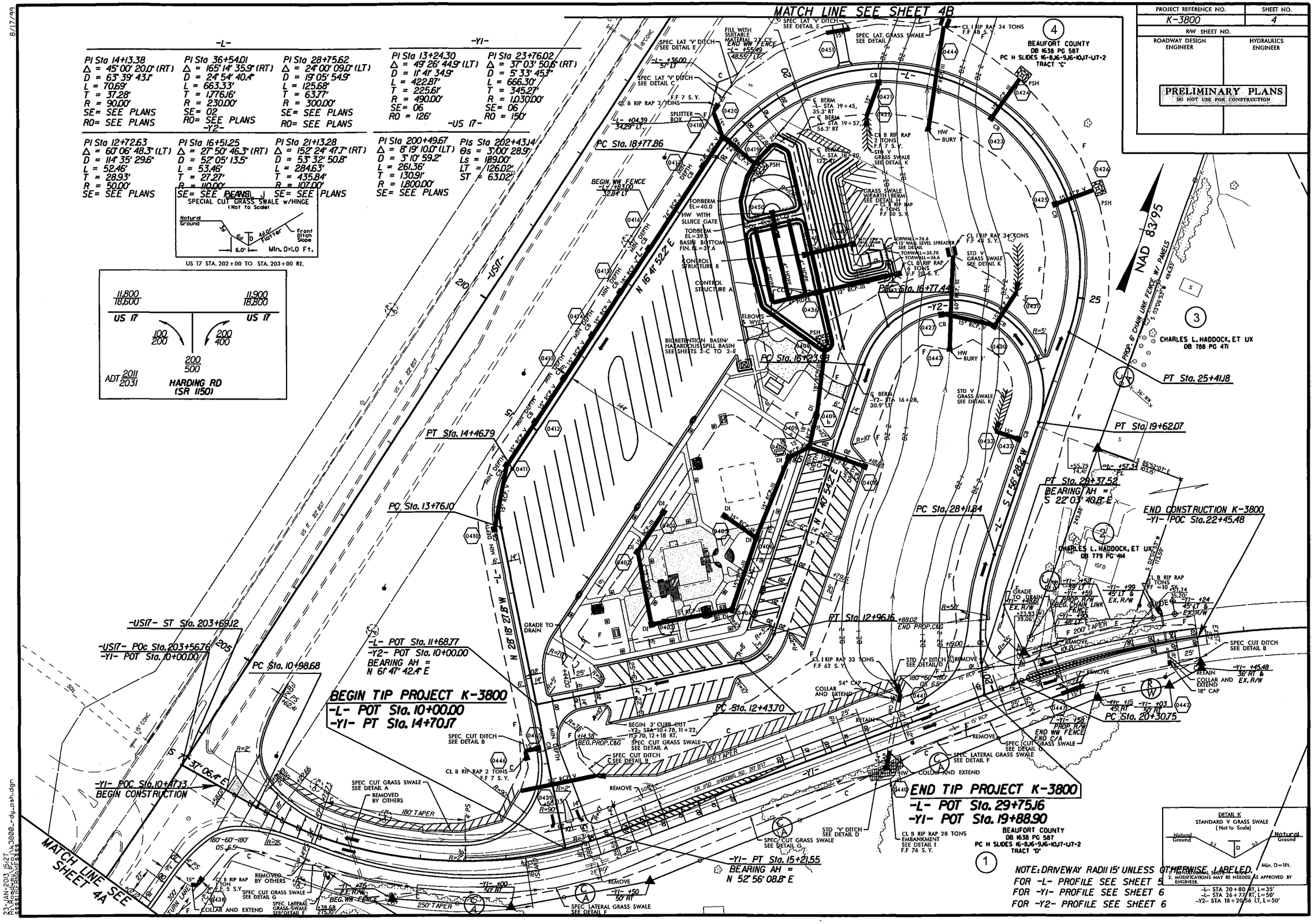

23-JAN-2013 15:27
R:\Hydraulics\Divisions\K3800_r-dy_psh.dgn
$$$$USERNAME$$$$

PROJECT REFERENCE NO.	SHEET NO.
K-3800	4B
R/W SHEET NO.	
ROADWAY DESIGN ENGINEER	HYDRAULICS ENGINEER

PRELIMINARY PLANS
DO NOT USE FOR CONSTRUCTION

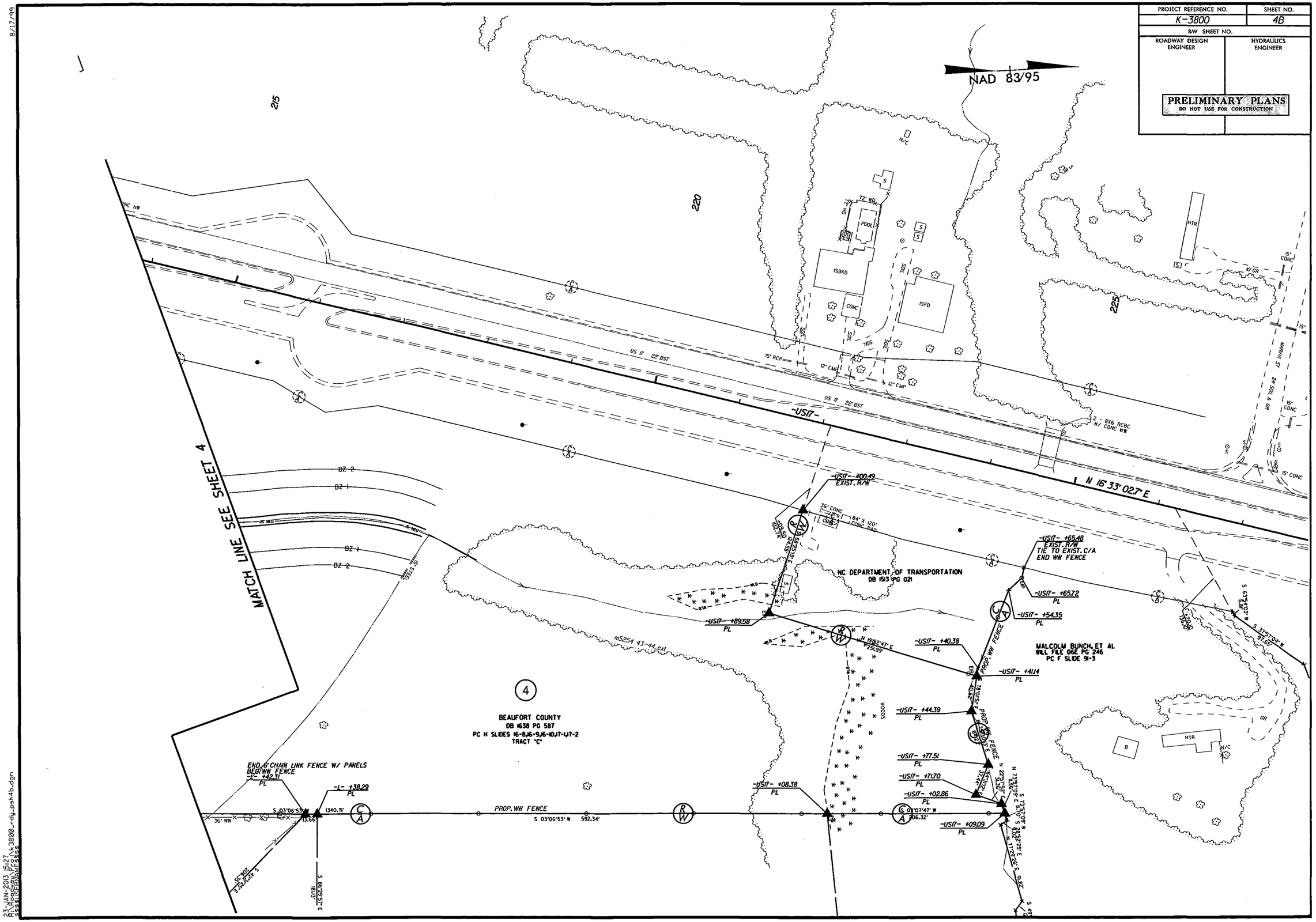

23-JAN-2013 15:27
R:\Roadway\PFOA\k3800_rdy_psh4b.dgn
$$$$USERNAME$$$$

8/17/99

5/28/99

PROJECT REFERENCE NO.	SHEET NO.
K-3800	5
ROADWAY DESIGN ENGINEER	HYDRAULICS ENGINEER

PRELIMINARY PLANS
DO NOT USE FOR CONSTRUCTION

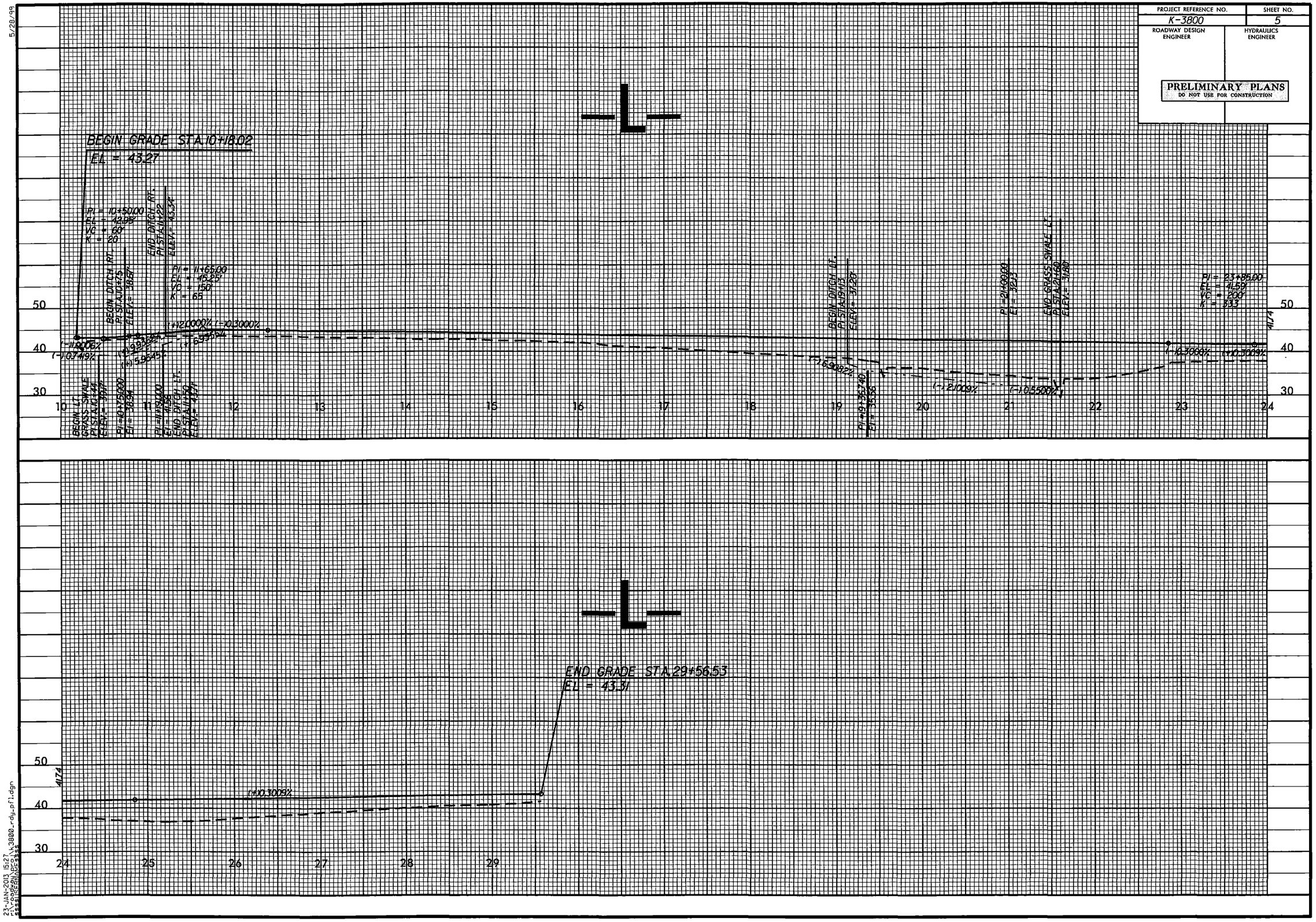

23-JAN-2013 15:27
F:\roadway\projects\k3800-rdy_pfl.dgn
$$$$$IEGRADE$$$$

PROJECT REFERENCE NO.	SHEET NO.
K-3800	6
ROADWAY DESIGN ENGINEER	HYDRAULICS ENGINEER

PRELIMINARY PLANS
DO NOT USE FOR CONSTRUCTION

5/28/99

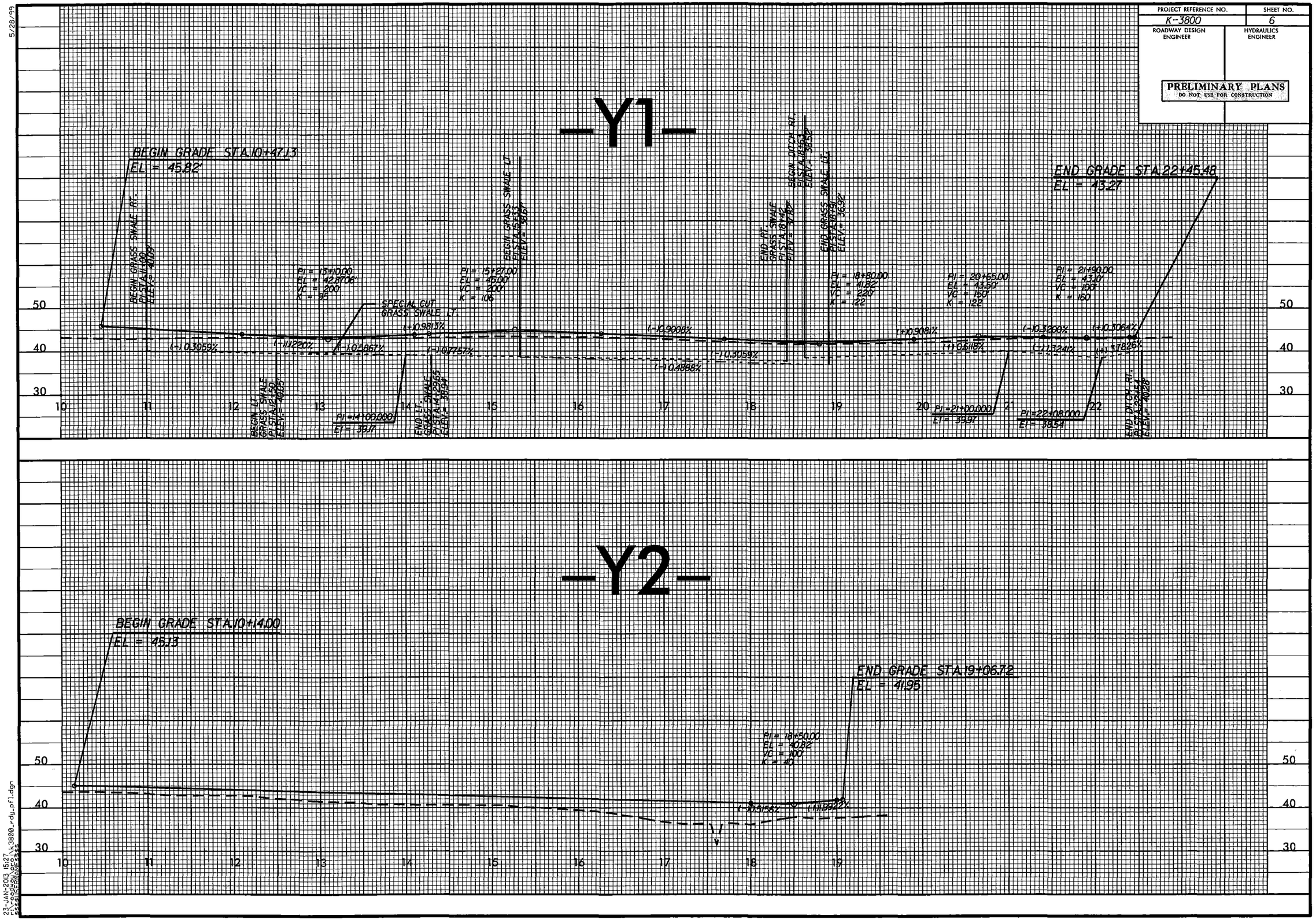

23-JAN-2013 15:27
F:\r-ceqeu\k3800_rdy_pfl.dgn
$$$$USERNAME$$$$

8/23/99

PROJ. REFERENCE NO.	SHEET NO.
K-3800	X-1

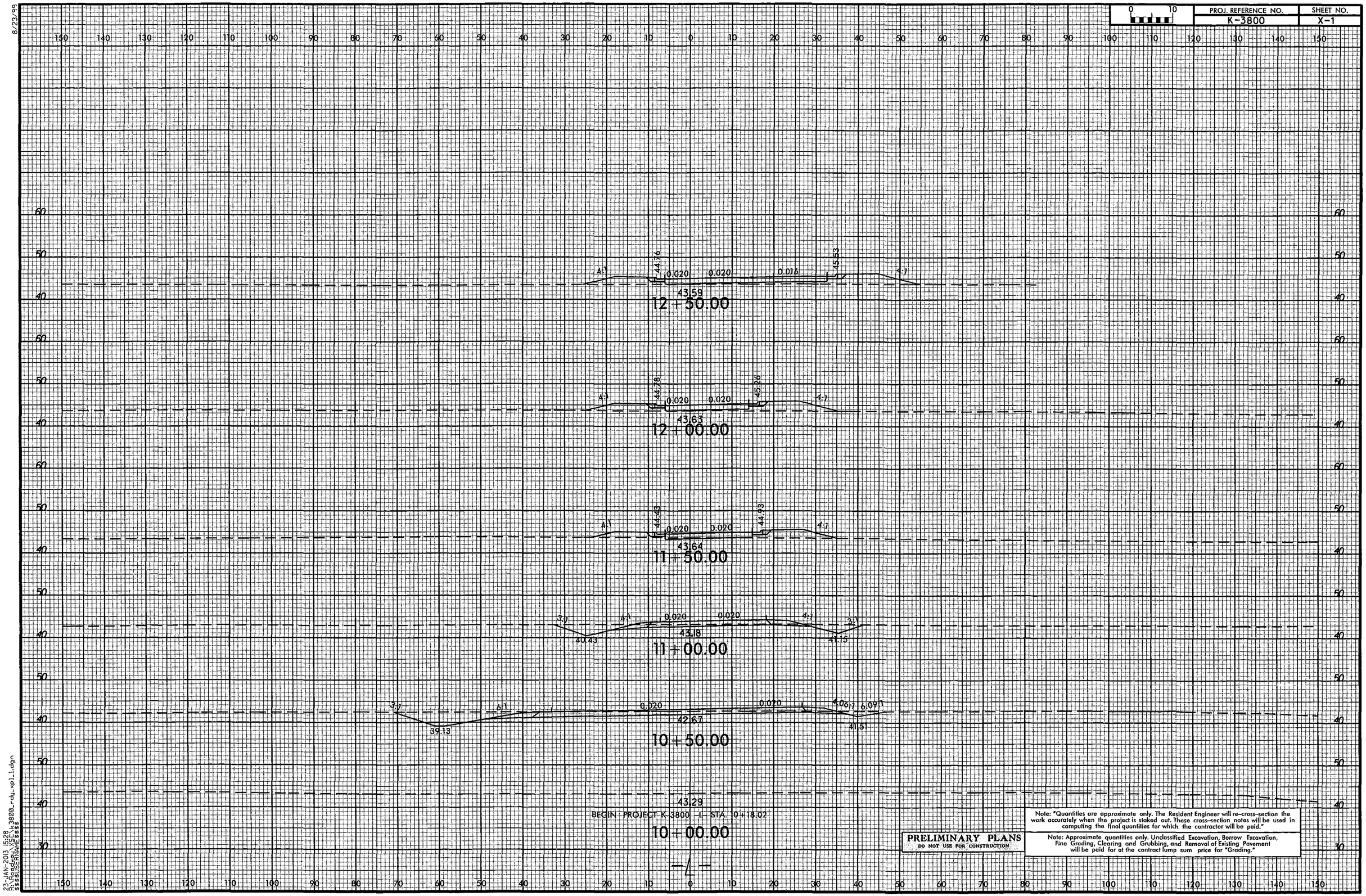

Note: "Quantities are approximate only. The Resident Engineer will re-cross-section the work accurately when the project is staked out. These cross-section notes will be used in computing the final quantities for which the contractor will be paid."

Note: Approximate quantities only. Unclassified Excavation, Borrow Excavation, Fine Grading, Clearing and Grubbing, and Removal of Existing Pavement will be paid for at the contract lump sum price for "Grading."

23-JAN-2013 15:28
R:\Roadway\Proj\k3800_rdy_xp1_1.dgn
$$$$USERNAME$$$$

8/23/99

PROJ. REFERENCE NO.	SHEET NO.
K-3800	X-2

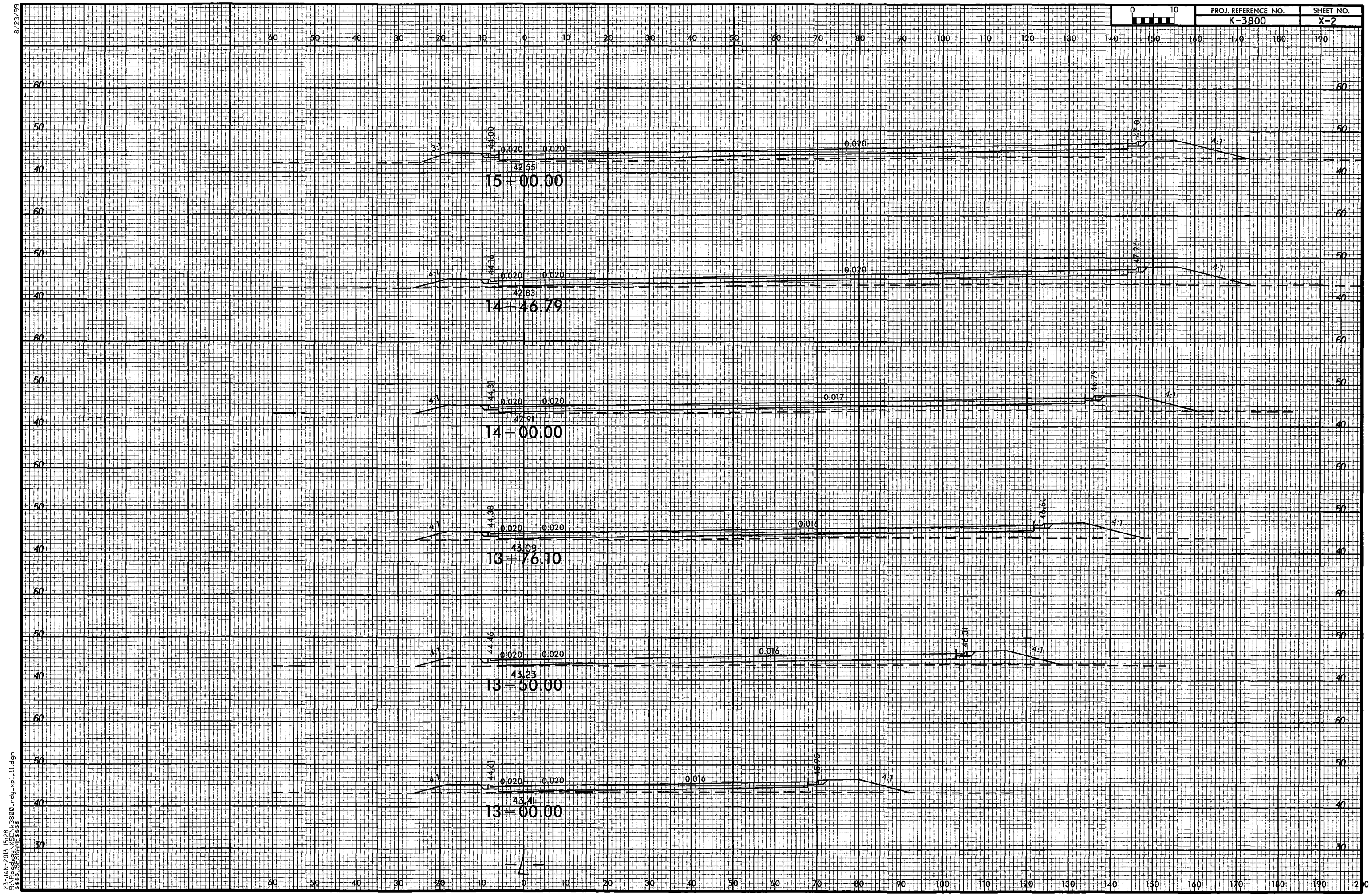

23-JAN-2013 15:28
R:\Roadway\Sec\k3800_rdy_xpl11.dgn
$$$$USERNAME$$$$

8/23/99

0 10	PROJ. REFERENCE NO.	SHEET NO.
	K-3800	X-3

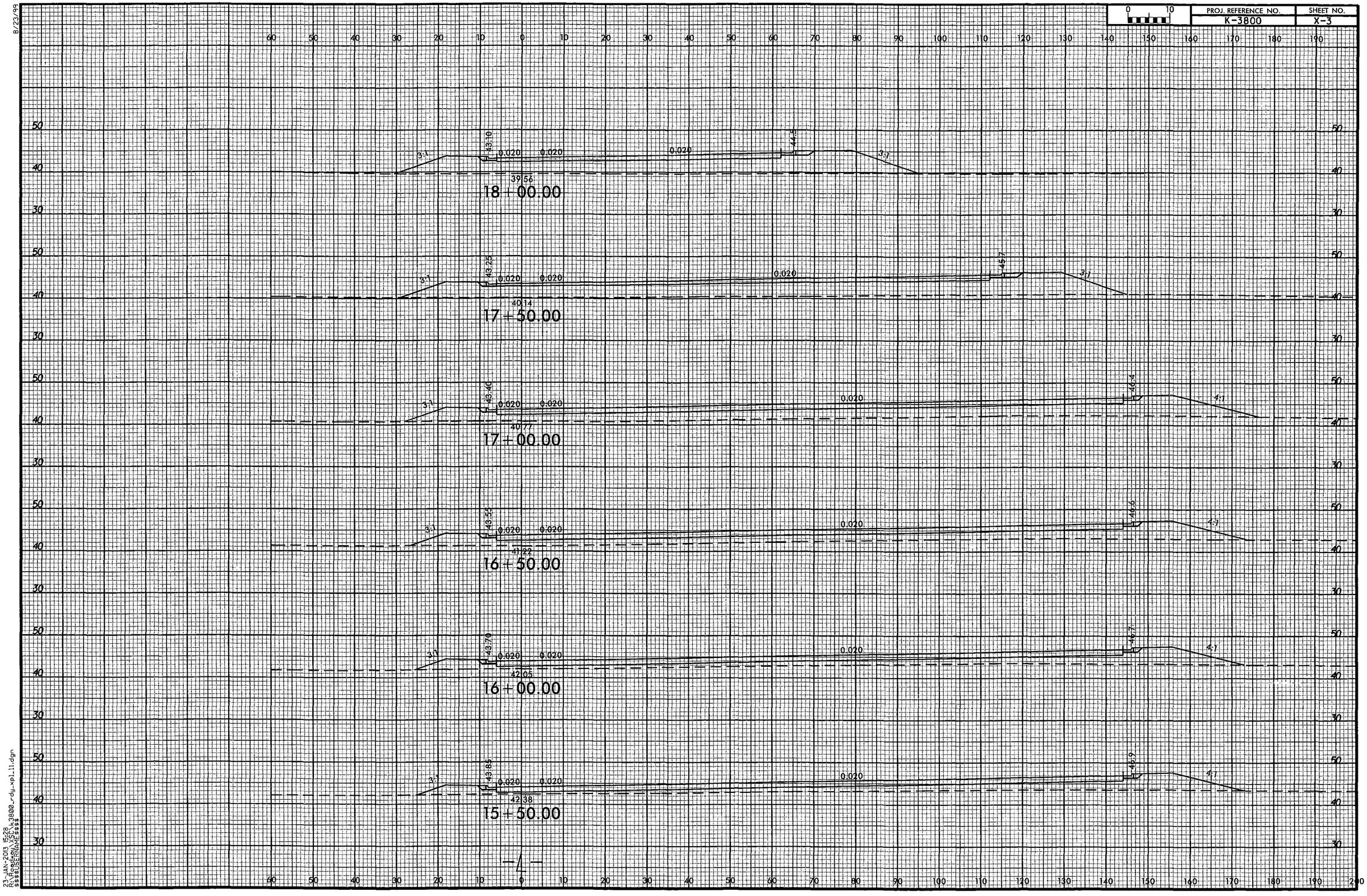

23-JAN-2013 15:28
R:\Roadway\Sec\k3800_rdy_xpl_11.dgn
$$$$USERNAME$$$$

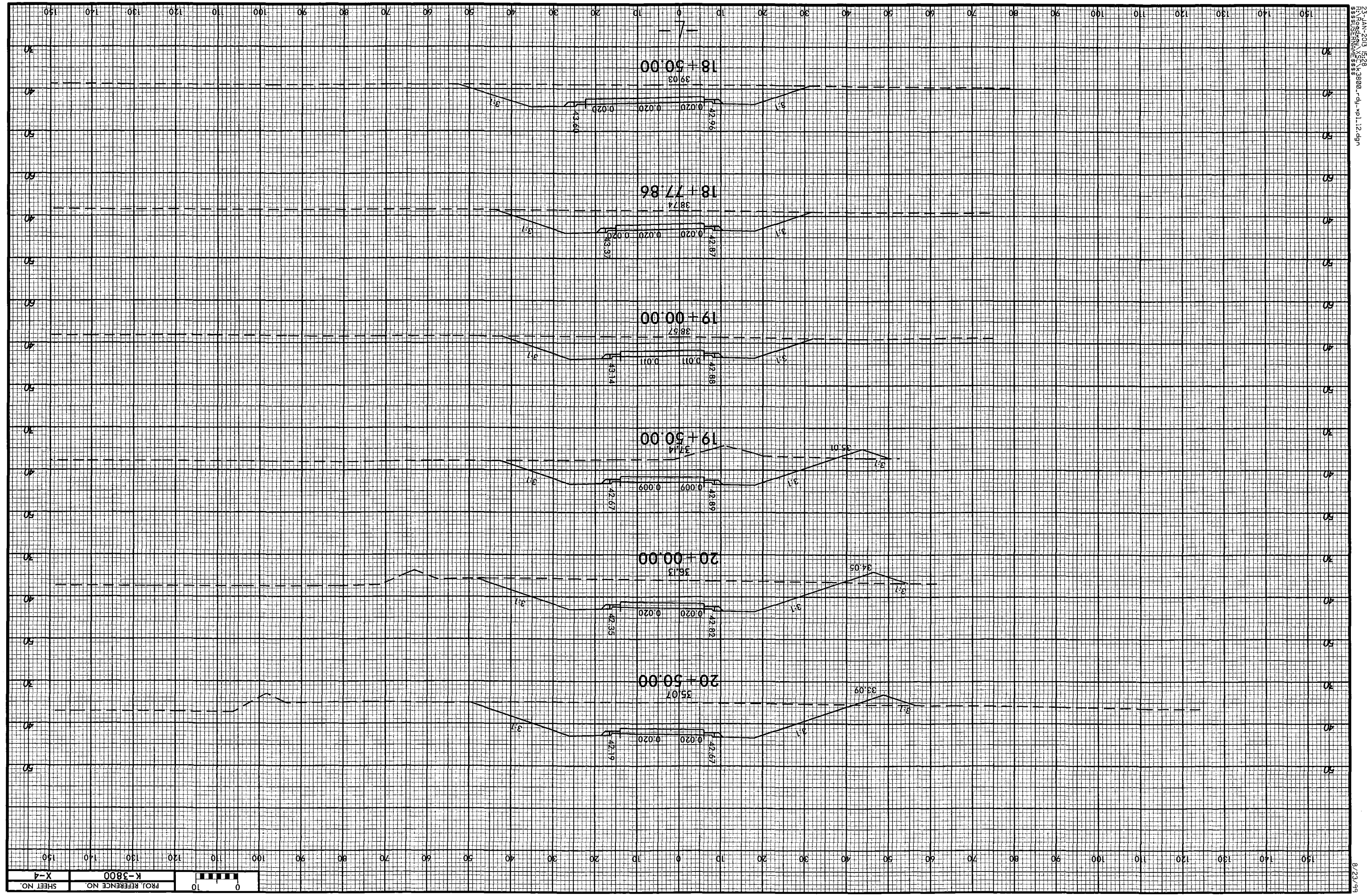
23-JAN-2013 15:28
R:\Tom\K3800_rdy_xpl12.dgn
$$$$USERNAME$$$$
-L-
18+50.00
39.03
42.96
42.67
0.020
0.020
3:1
3:1
18+77.86
38.74
42.87
42.34
0.020
0.020
3:1
3:1
19+00.00
38.57
42.88
43.14
0.011
3:1
3:1
19+50.00
37.14
35.01
42.89
42.67
0.009
0.009
3:1
3:1
20+00.00
36.13
34.05
42.82
42.35
0.020
0.020
3:1
3:1
20+50.00
35.07
33.09
42.67
42.19
0.020
0.020
3:1
3:1
0 10
PROJ. REFERENCE NO.
K-3800
SHEET NO.
X-4
8/23/99

8/23/99

0 10	PROJ. REFERENCE NO.	SHEET NO.
	K-3800	X-5

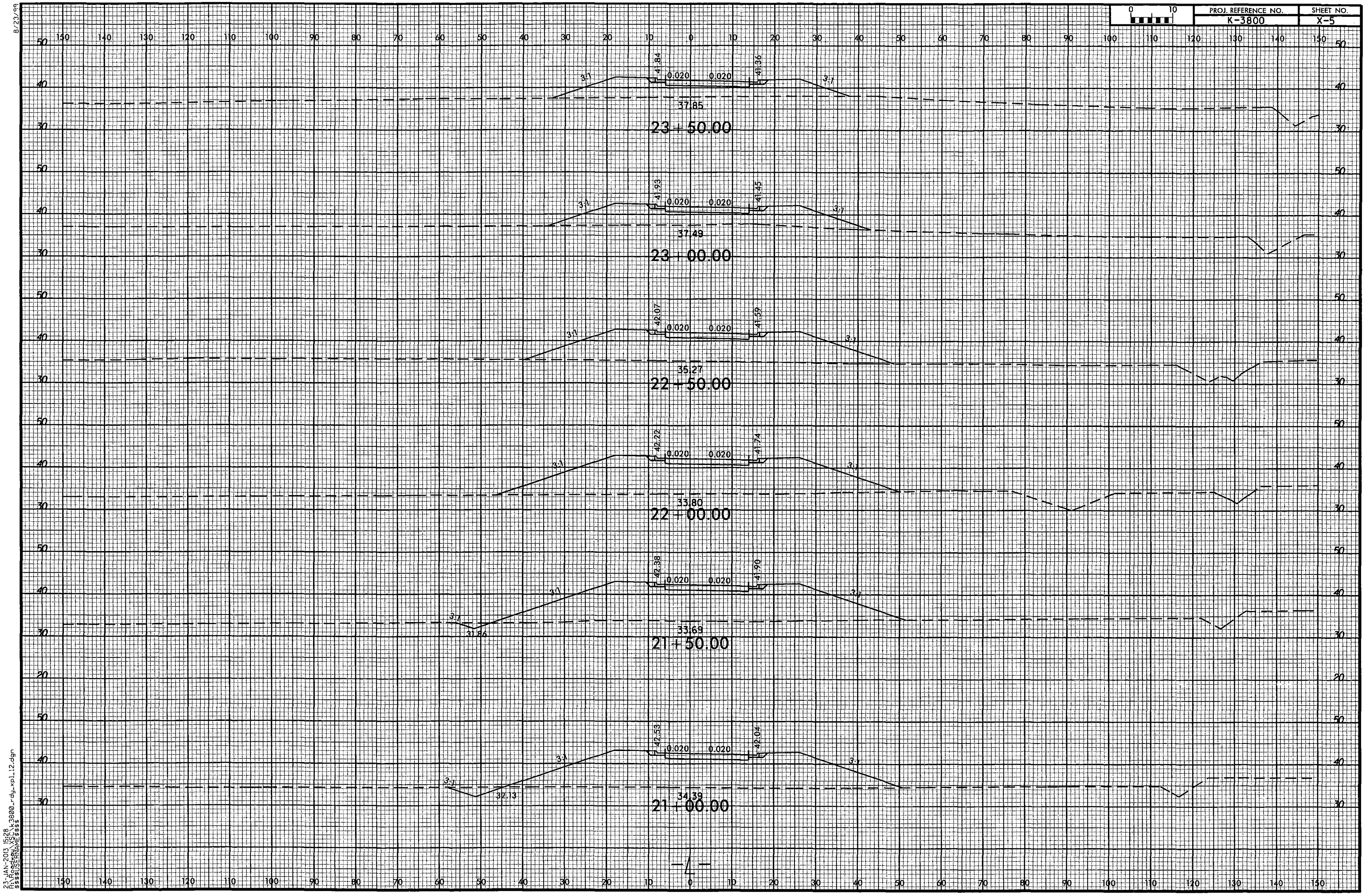

23-JAN-2013 15:28
R:\Roadway\k3800_rdy_xpl12.dgn
$$$$USERNAME$$$$

8/23/99

PROJ. REFERENCE NO.	SHEET NO.
K-3800	X-6

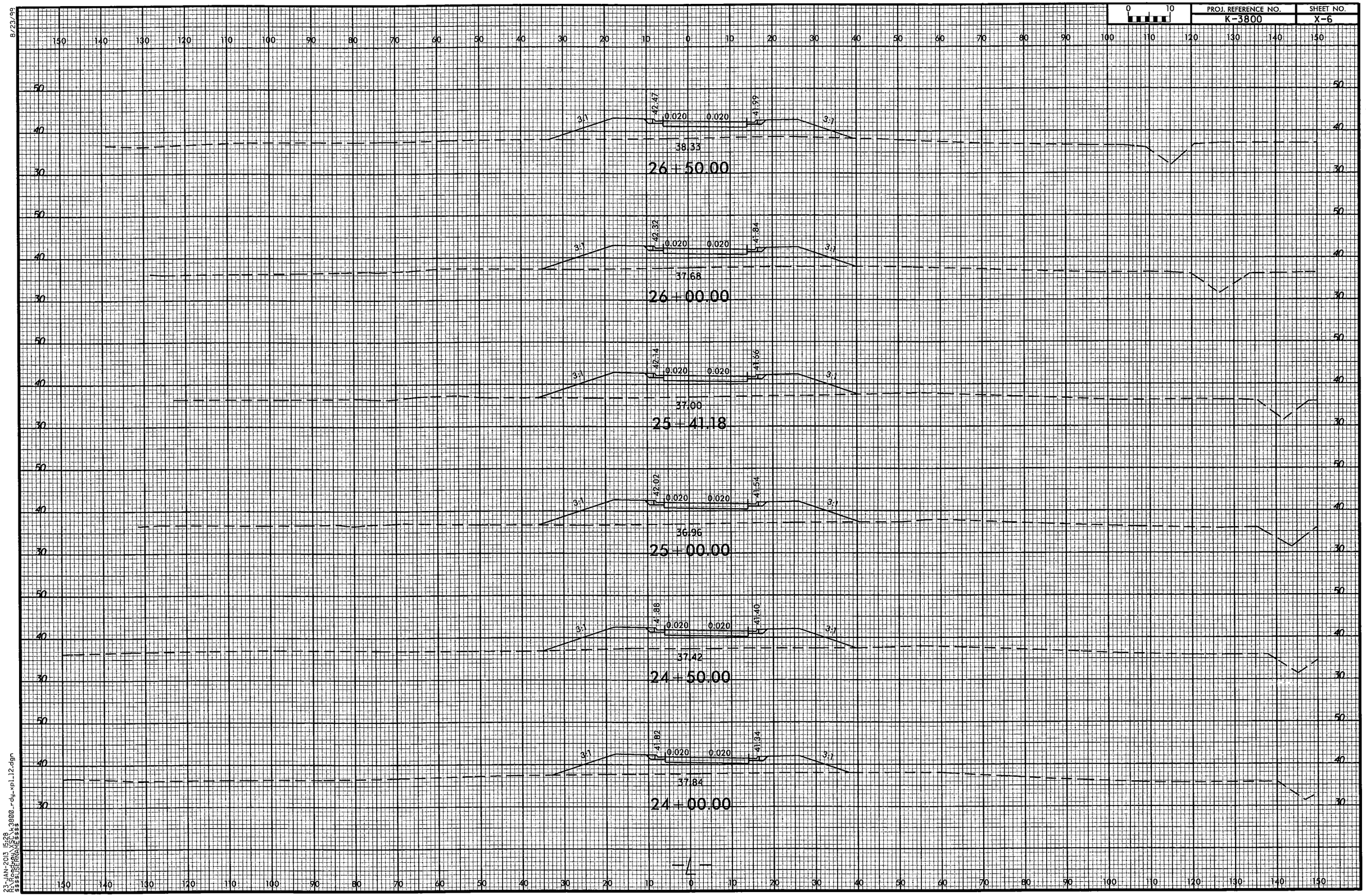

23-JAN-2013 15:29
$$$$USERNAME$$$$
k3800_rdy-xpl12.dgn

8/23/99

PROJ. REFERENCE NO.	SHEET NO.
K-3800	X-7

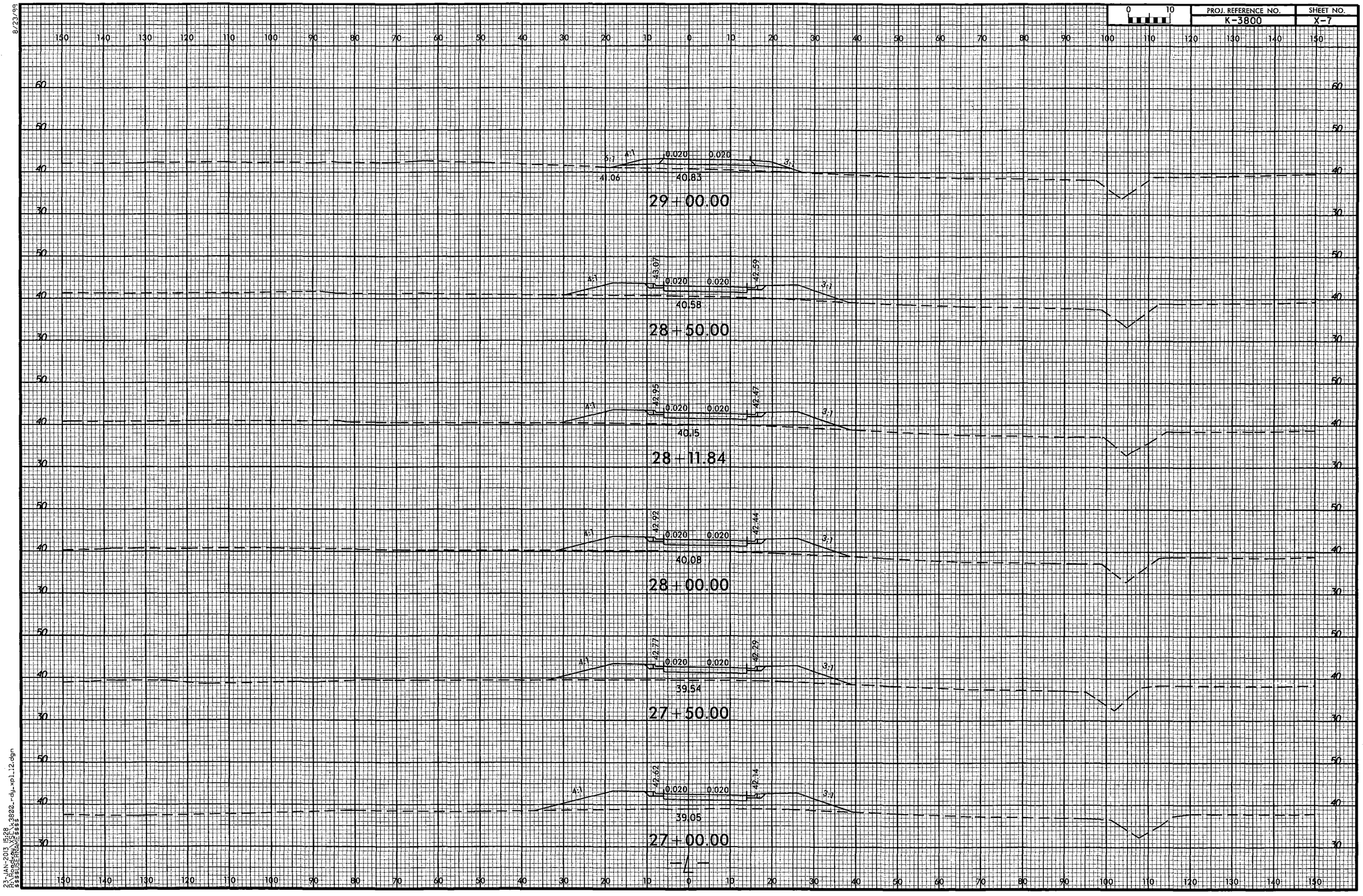

23-JAN-2013 15:28
R:\00000fil\k3800_rdy_xp1_12.dgn
$$$$USERNAME$$$$

8/23/99

0 10	PROJ. REFERENCE NO.	SHEET NO.
	K-3800	X-8

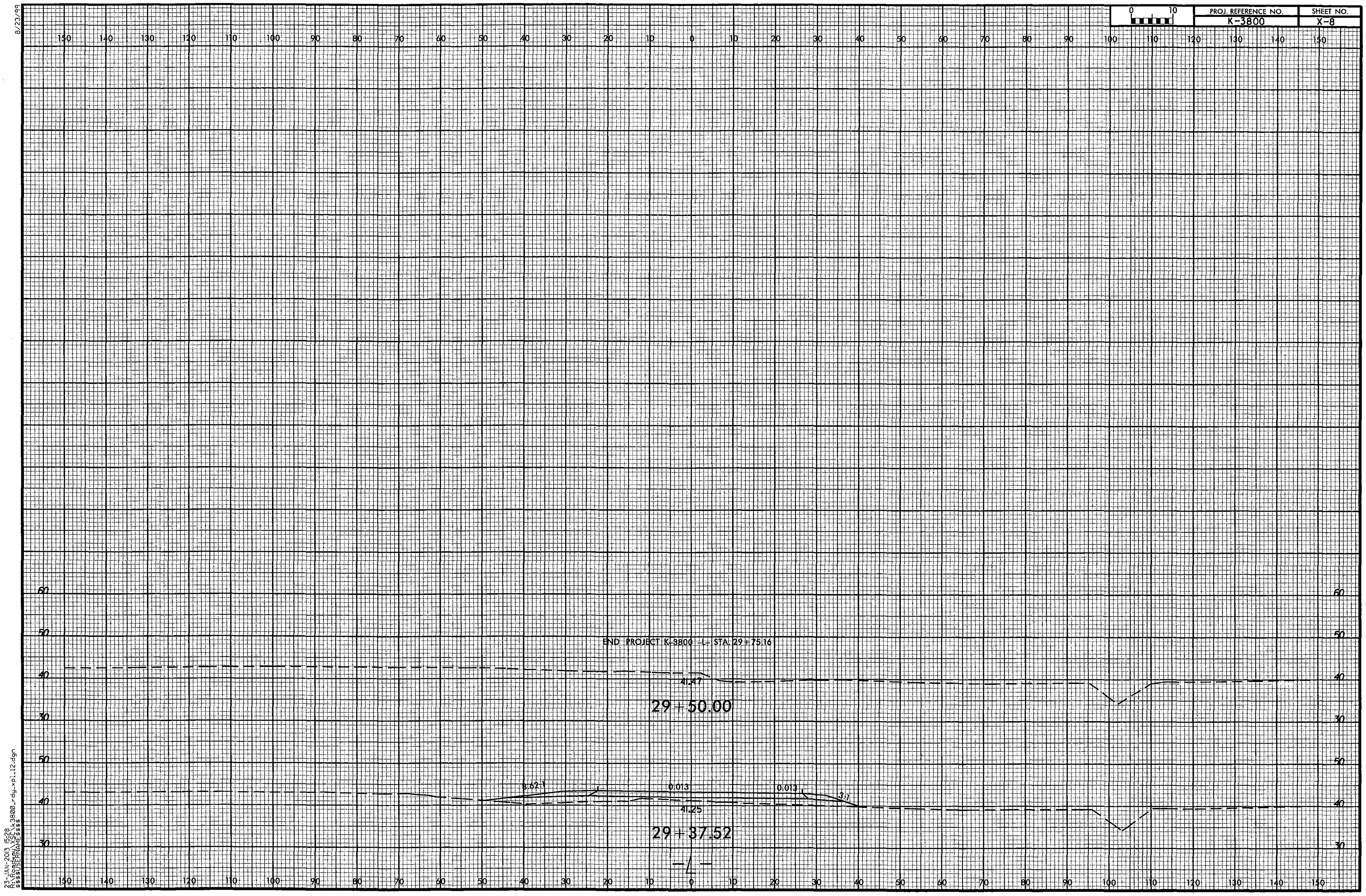

23-JAN-2013 15:28
R:\Roadway\Sec\k3800_rdy_xpl12.dgn
$$$$USERNAME$$$$

8/23/99

0 10	PROJ. REFERENCE NO.	SHEET NO.
	K-3800	X-9

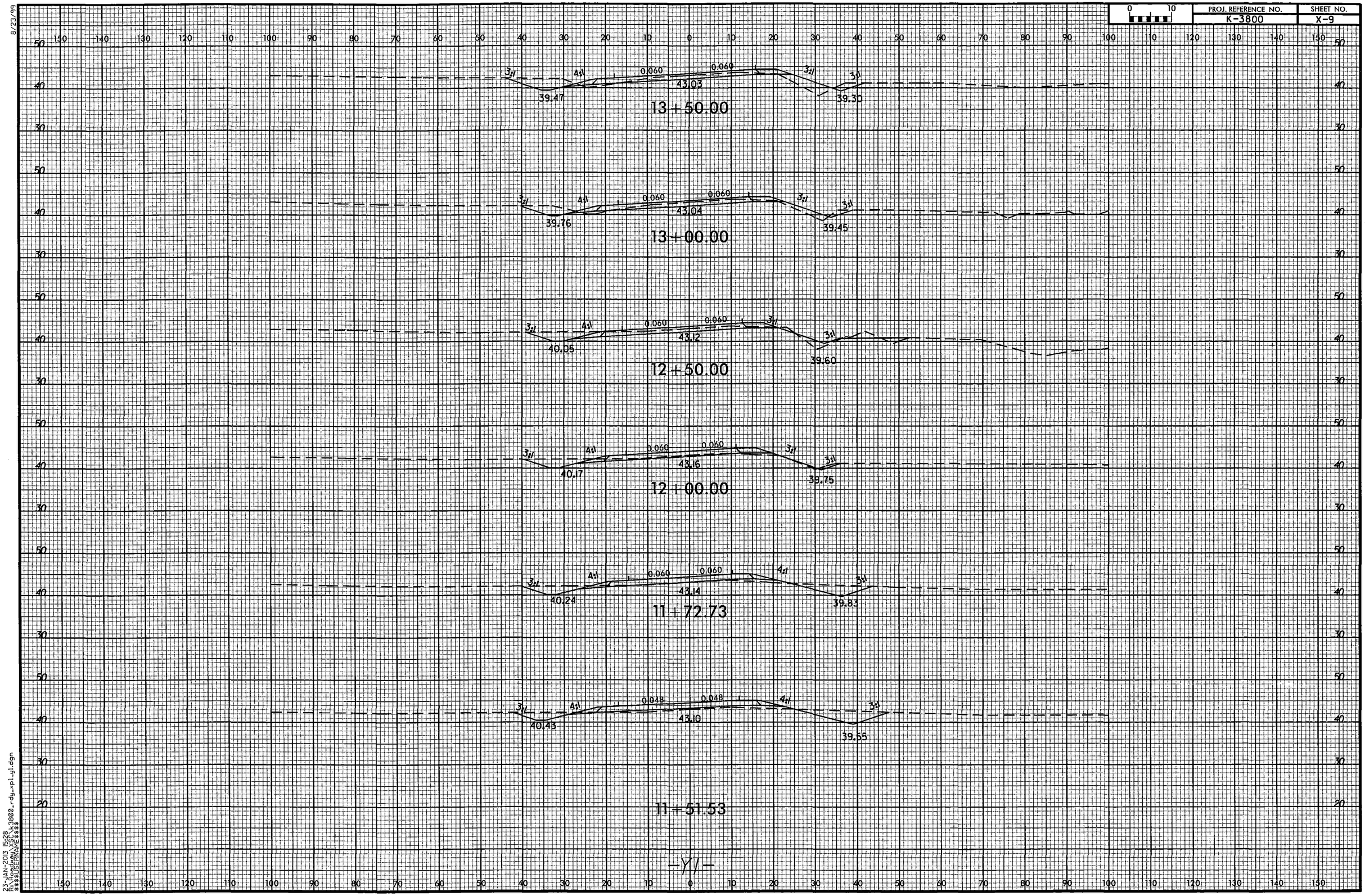

23-JAN-2013 15:28
R:\k3800_rdy_xpl_y1.dgn
$$$$USERNAME$$$$

8/23/99

0 10	PROJ. REFERENCE NO.	SHEET NO.
	K-3800	X-10

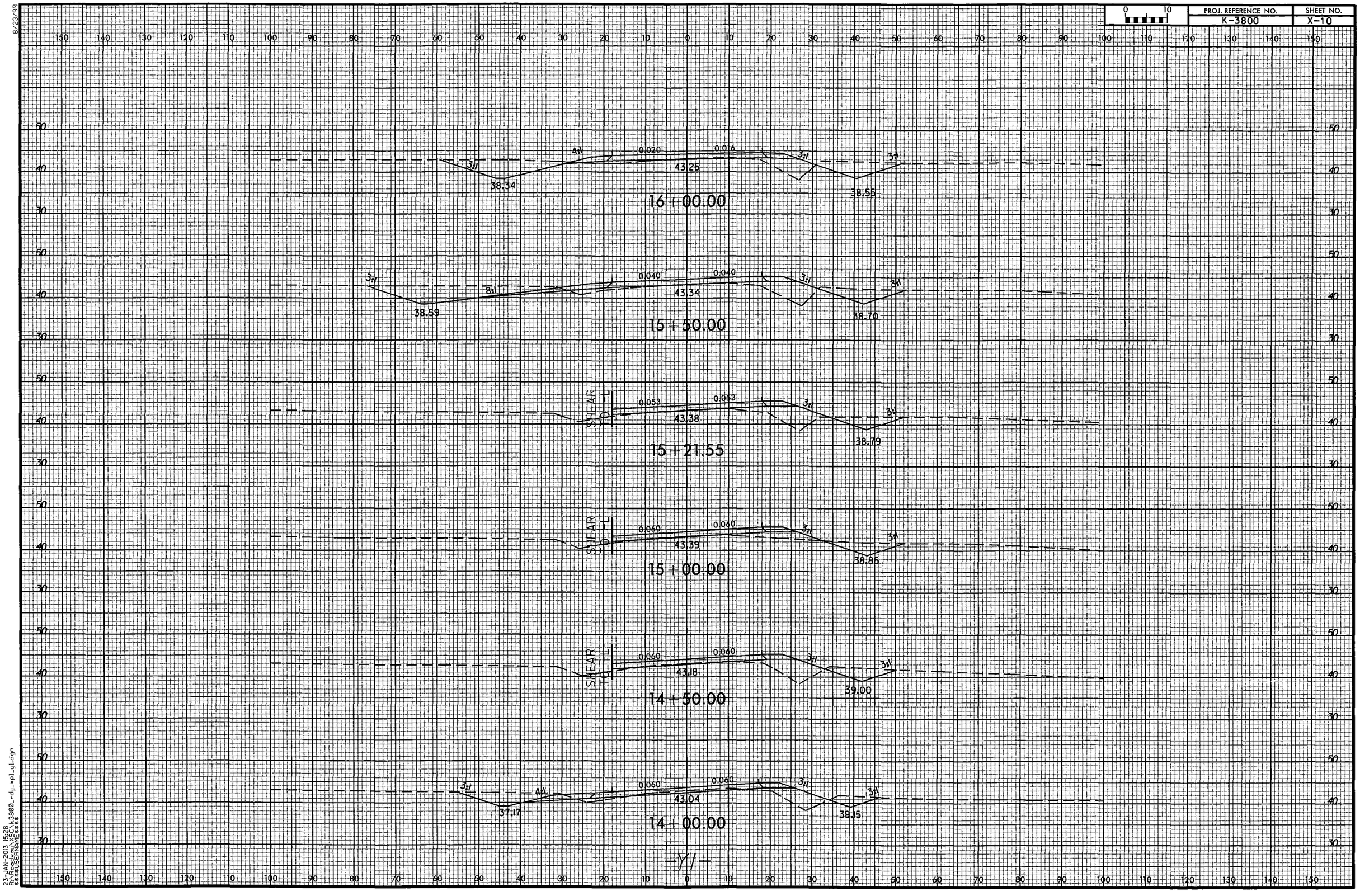

23-JAN-2013 15:28
R:\Roadway\k3800_rdy_xpl_y1.dgn
$$$$USERNAME$$$$

8/23/99

PROJ. REFERENCE NO.	SHEET NO.
K-3800	X-11

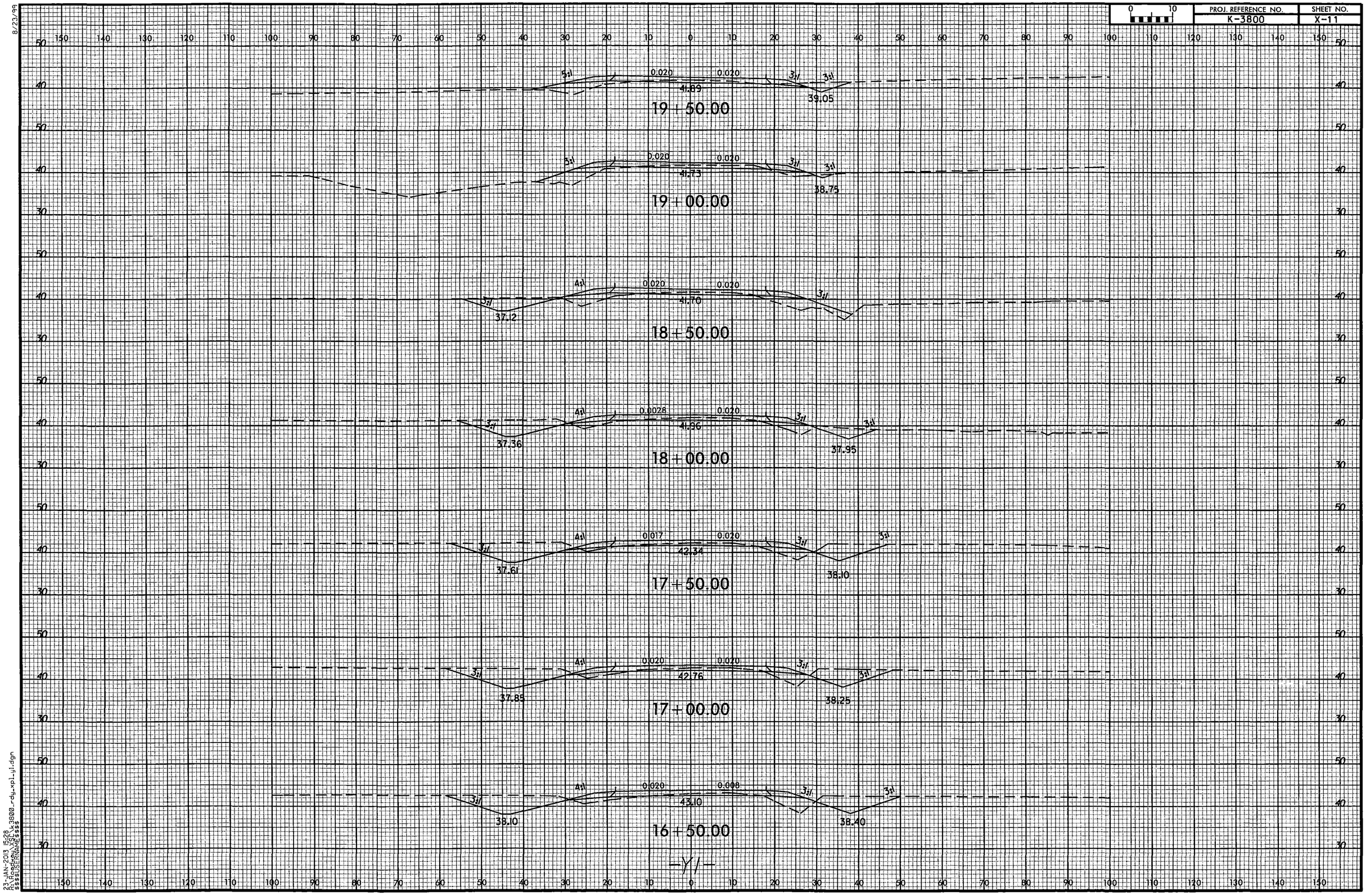

23-JAN-2013 15:28
R:\Active\K3800\rdy_xpl_yl.dgn
$$$$USERNAME$$$$

8/23/99

PROJ. REFERENCE NO.	SHEET NO.
K-3800	X-12

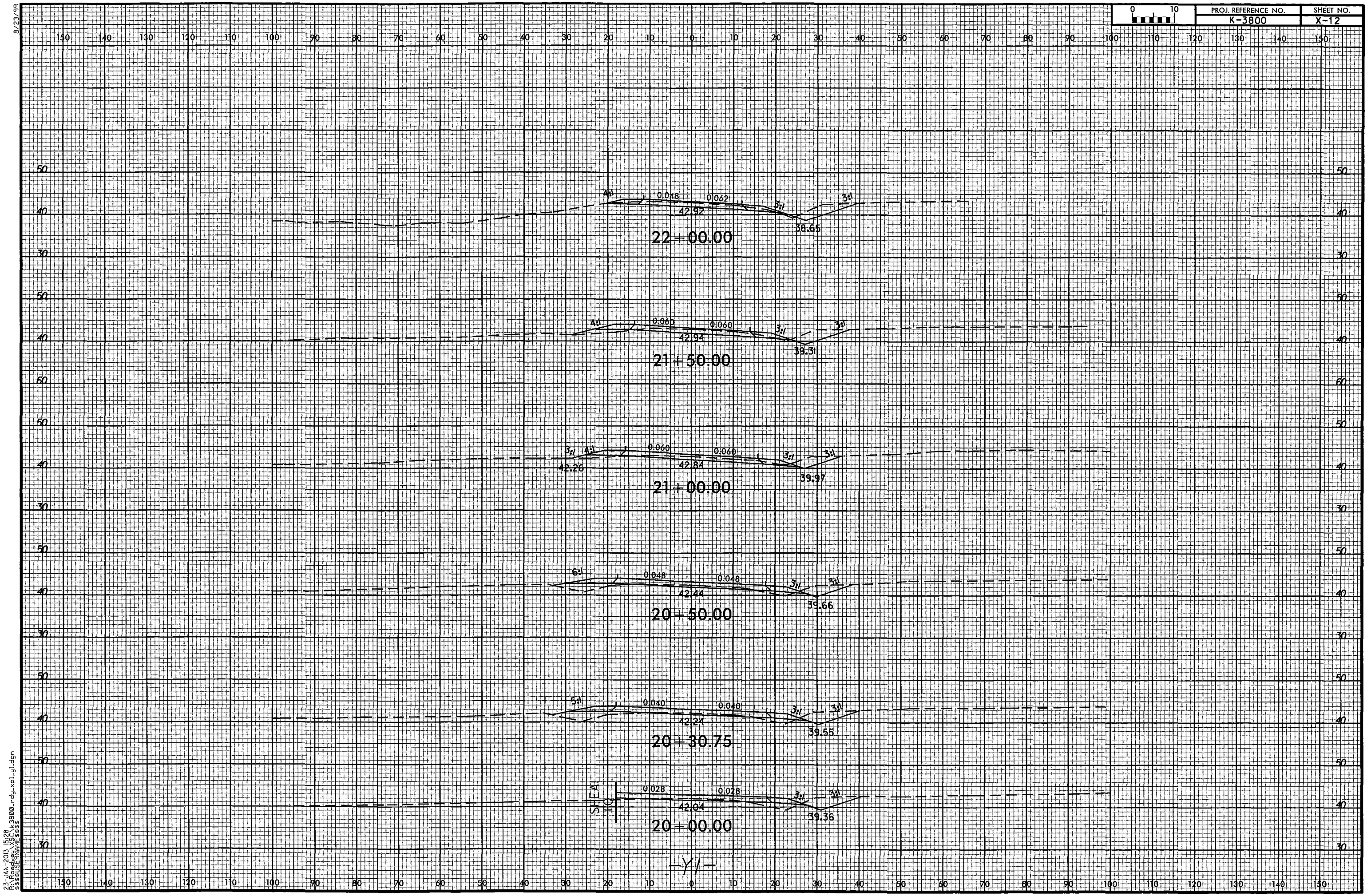

23-JAN-2013 15:28
R:\Roadway\SECtk3800_rdy_xpl_byl.dgn
$$$$USERNAME$$$$

8/23/99

0 10	PROJ. REFERENCE NO.	SHEET NO.
	K-3800	X-13

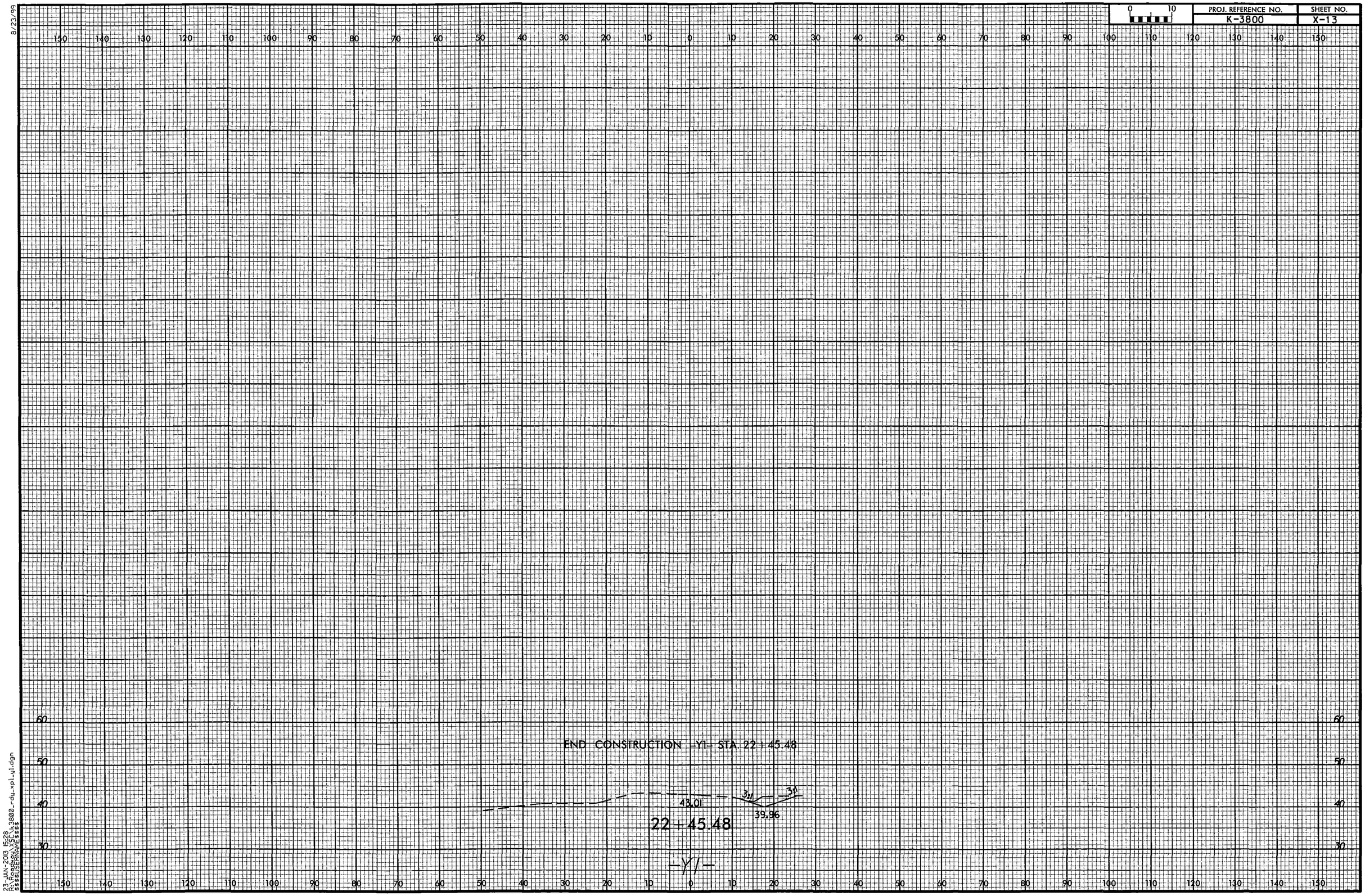

23-JAN-2013 15:28
K:\DGN\K3800_rdy_xpl_yl.dgn
$$$$USERNAME$$$$

8/23/99

PROJ. REFERENCE NO.	SHEET NO.
K-3800	X-14

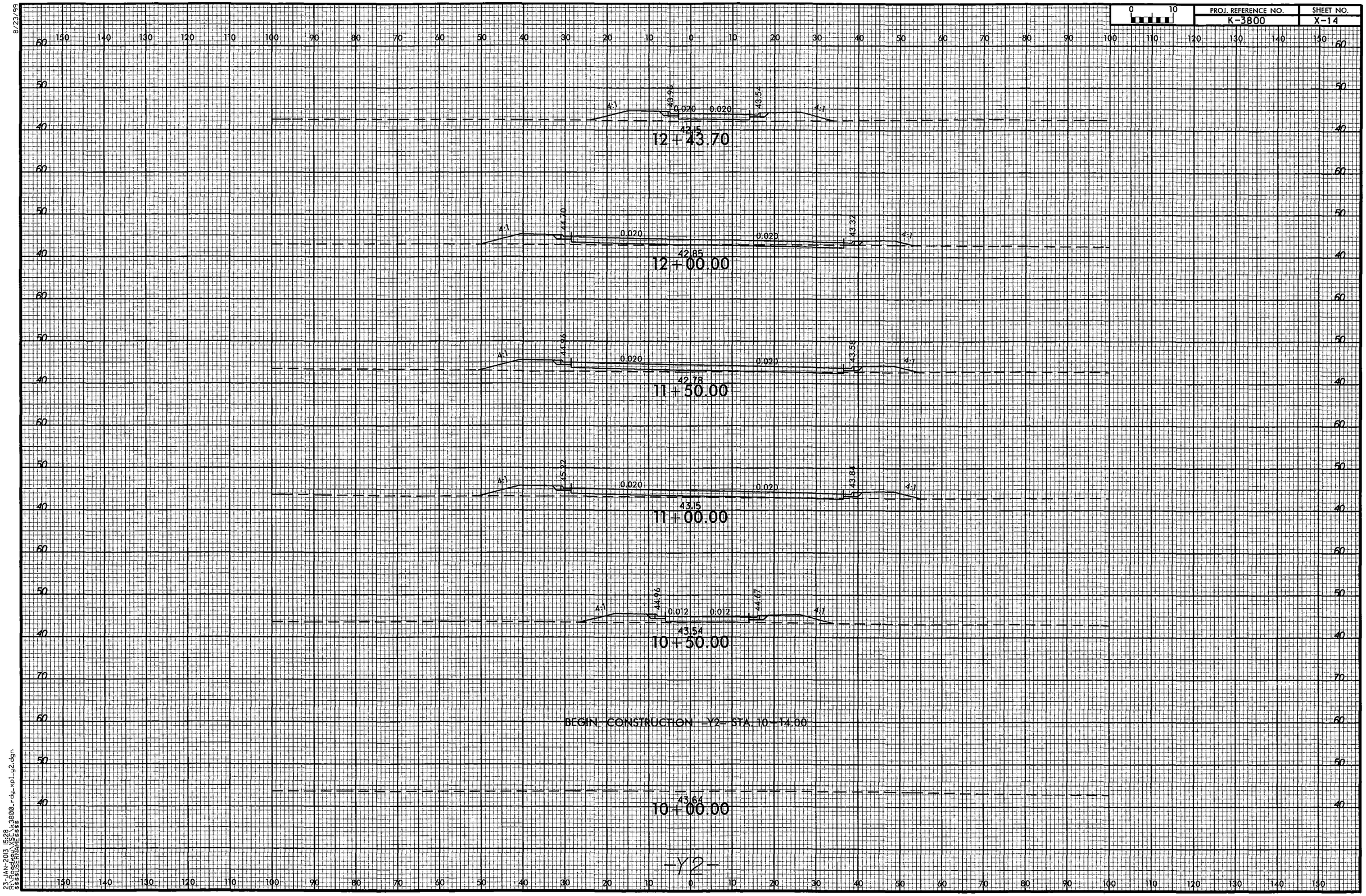

23-JAN-2013 15:28
R:\k3800_rdy_xp1_y2.dgn
$$$$USERNAME$$$$

8/23/99

0 10	PROJ. REFERENCE NO.	SHEET NO.
	K-3800	X-15

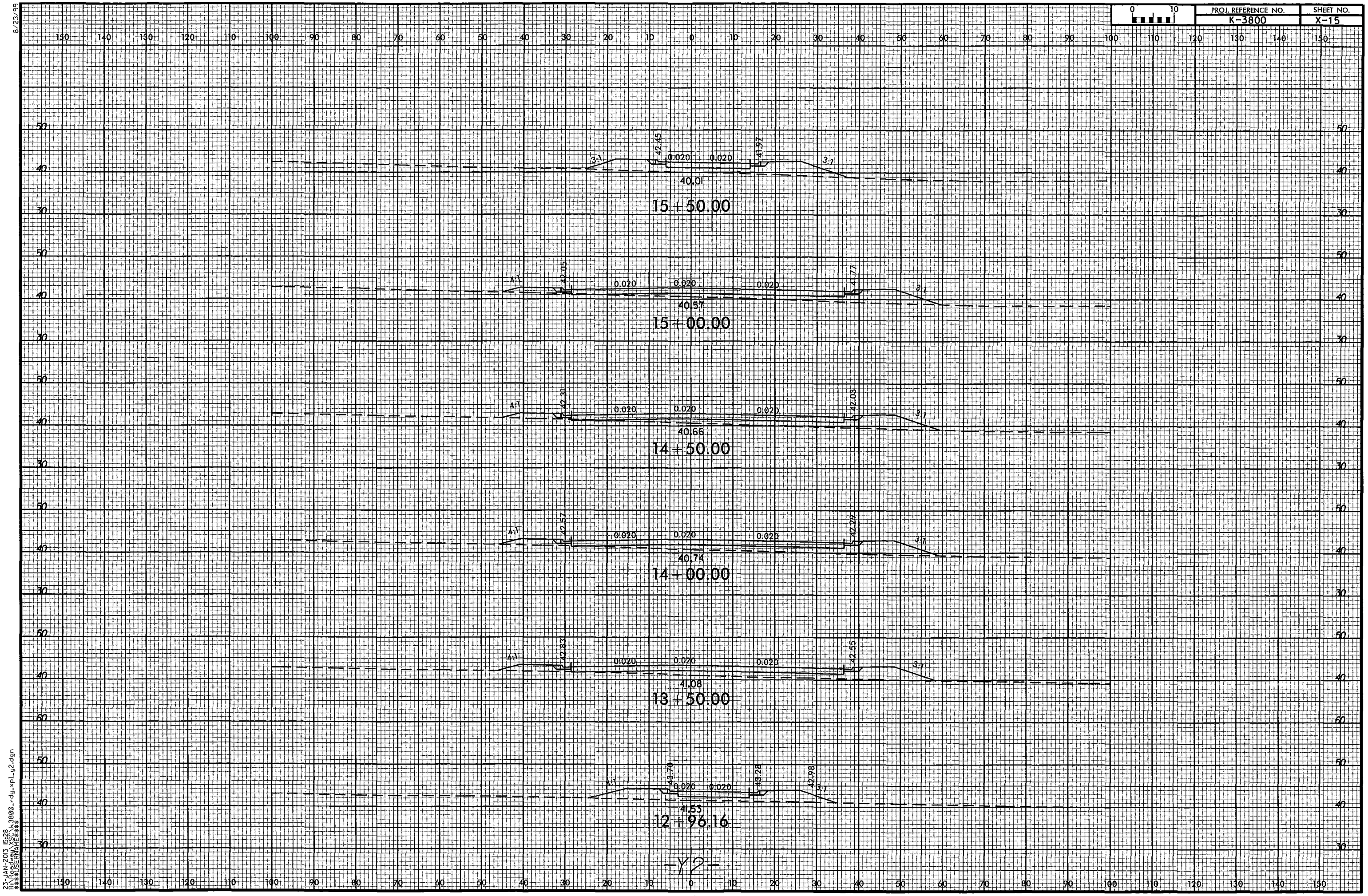

23-JAN-2013 15:28
R:\Roadway\Sck\k3800_rdy_xpl_y2.dgn
$$$$USERNAME$$$$

8/23/99

0 10	PROJ. REFERENCE NO.	SHEET NO.
	K-3800	X-16

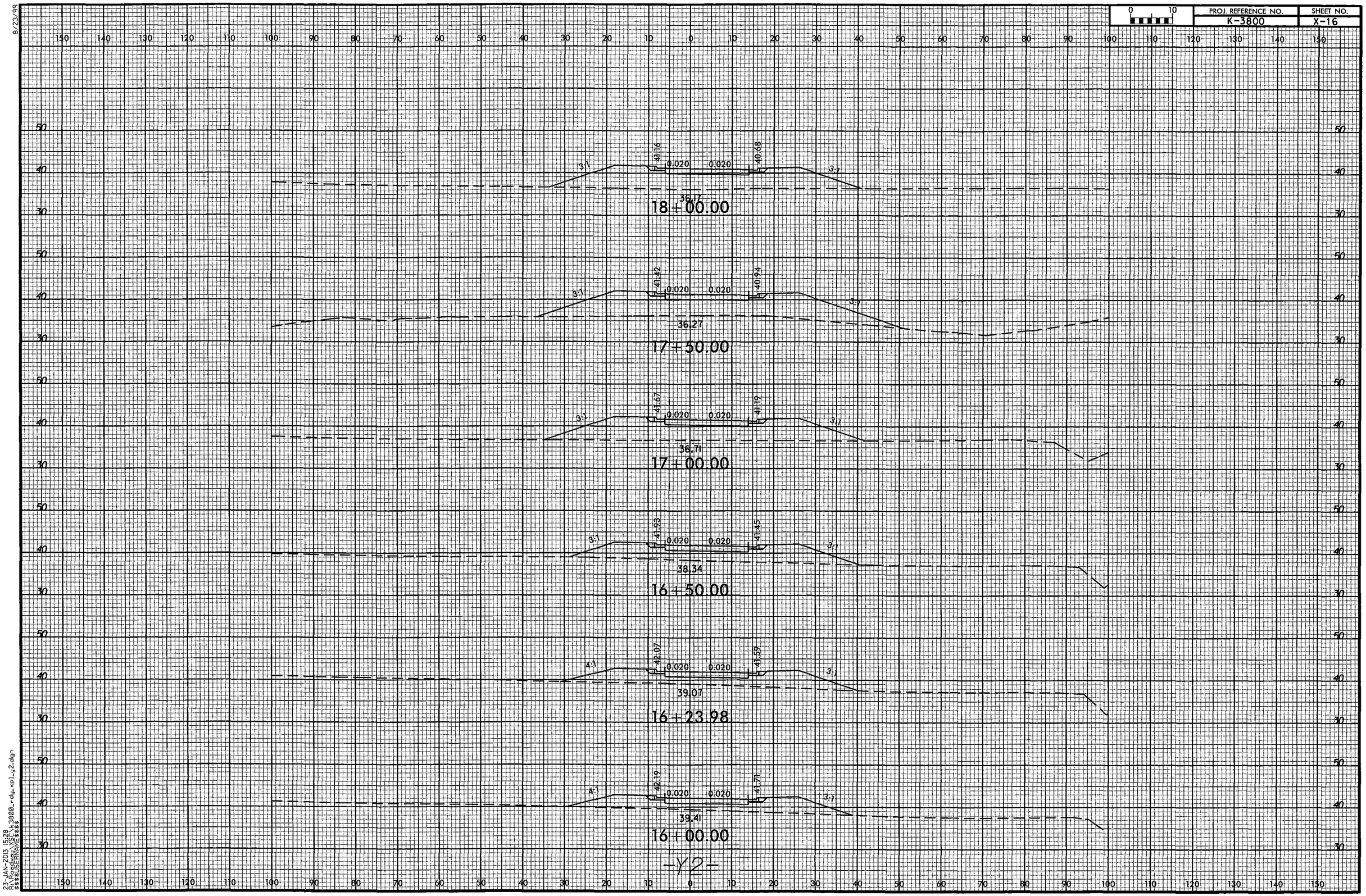

23-JAN-2013 15:28
R:\Geodata\Proj\k3800_rdy_xpl_y2.dgn
$$$$USERNAME$$$$

8/23/99

PROJ. REFERENCE NO.	SHEET NO.
K-3800	X-17

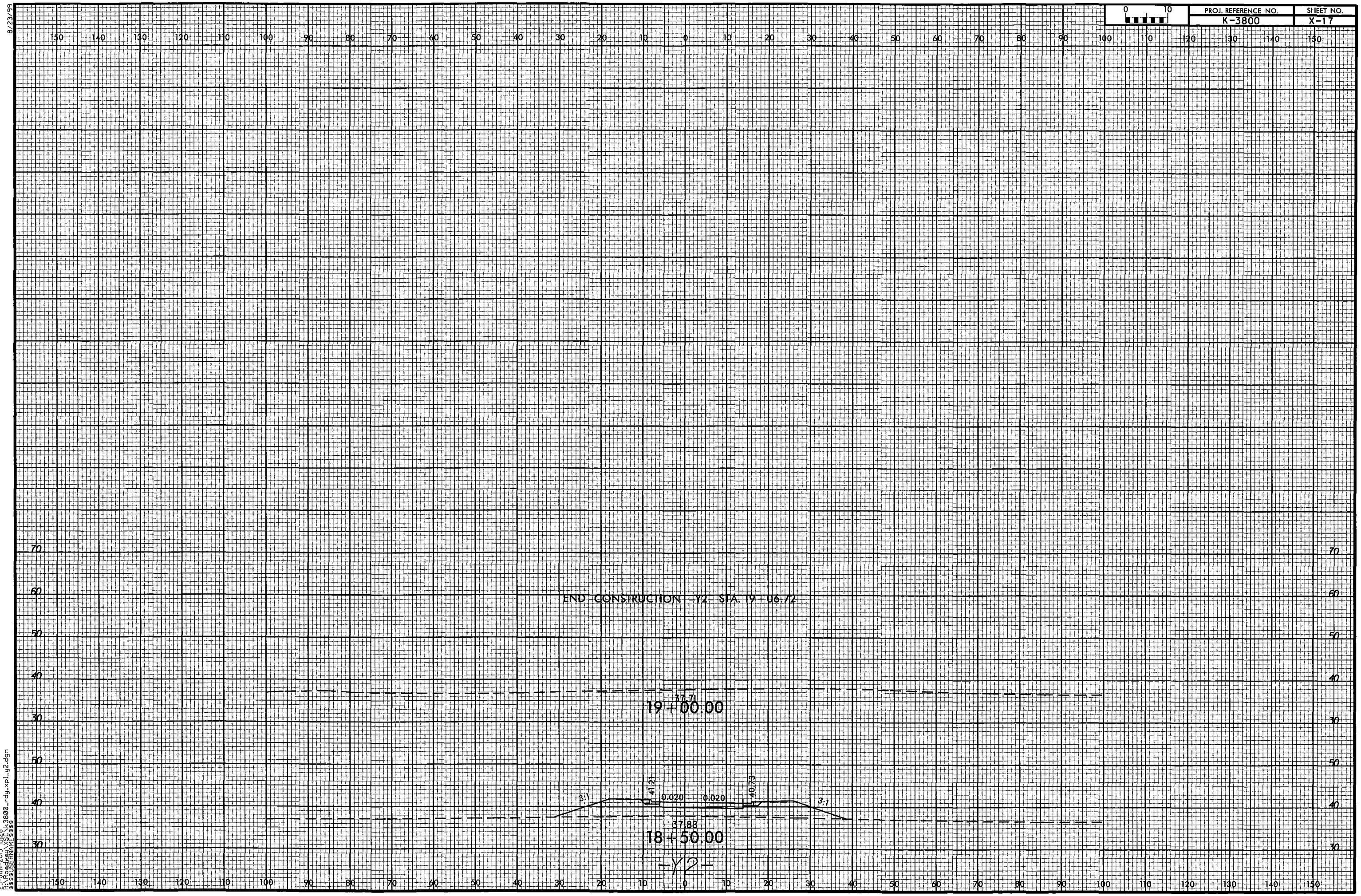

23-JAN-2013 15:28
R:\Roadway\SEN\k3800_rdy_xpl_y2.dgn
$$$$USERNAME$$$$

8/23/99

0 10	PROJ. REFERENCE NO.	SHEET NO.
	K-3800	X-18

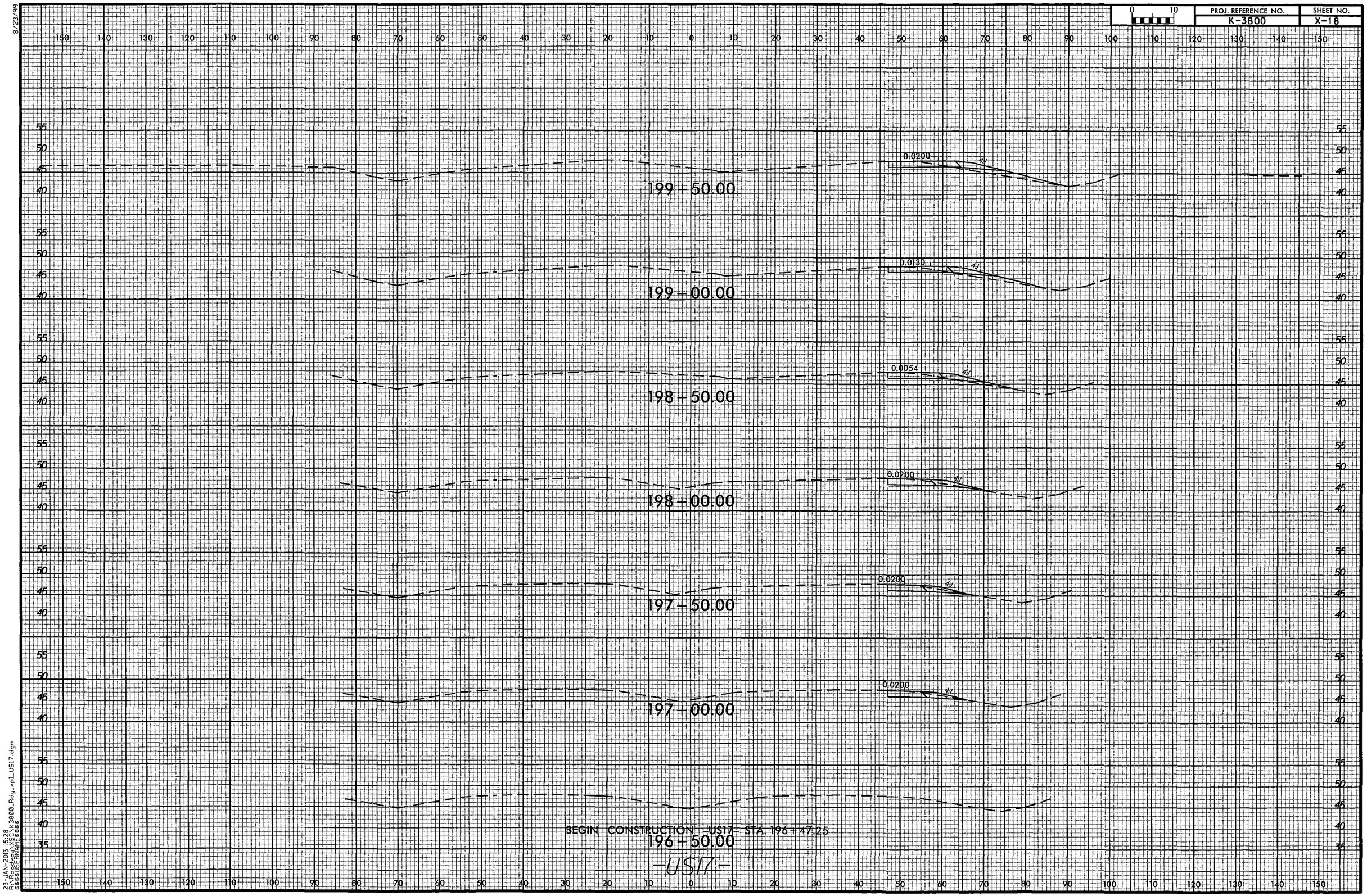

23-JAN-2013 15:28
R:\Roadway\K3800_Rdy_xpl_US17.dgn
$$$$USERNAME$$$$

8/23/99

0 10	PROJ. REFERENCE NO.	SHEET NO.
	K-3800	X-19

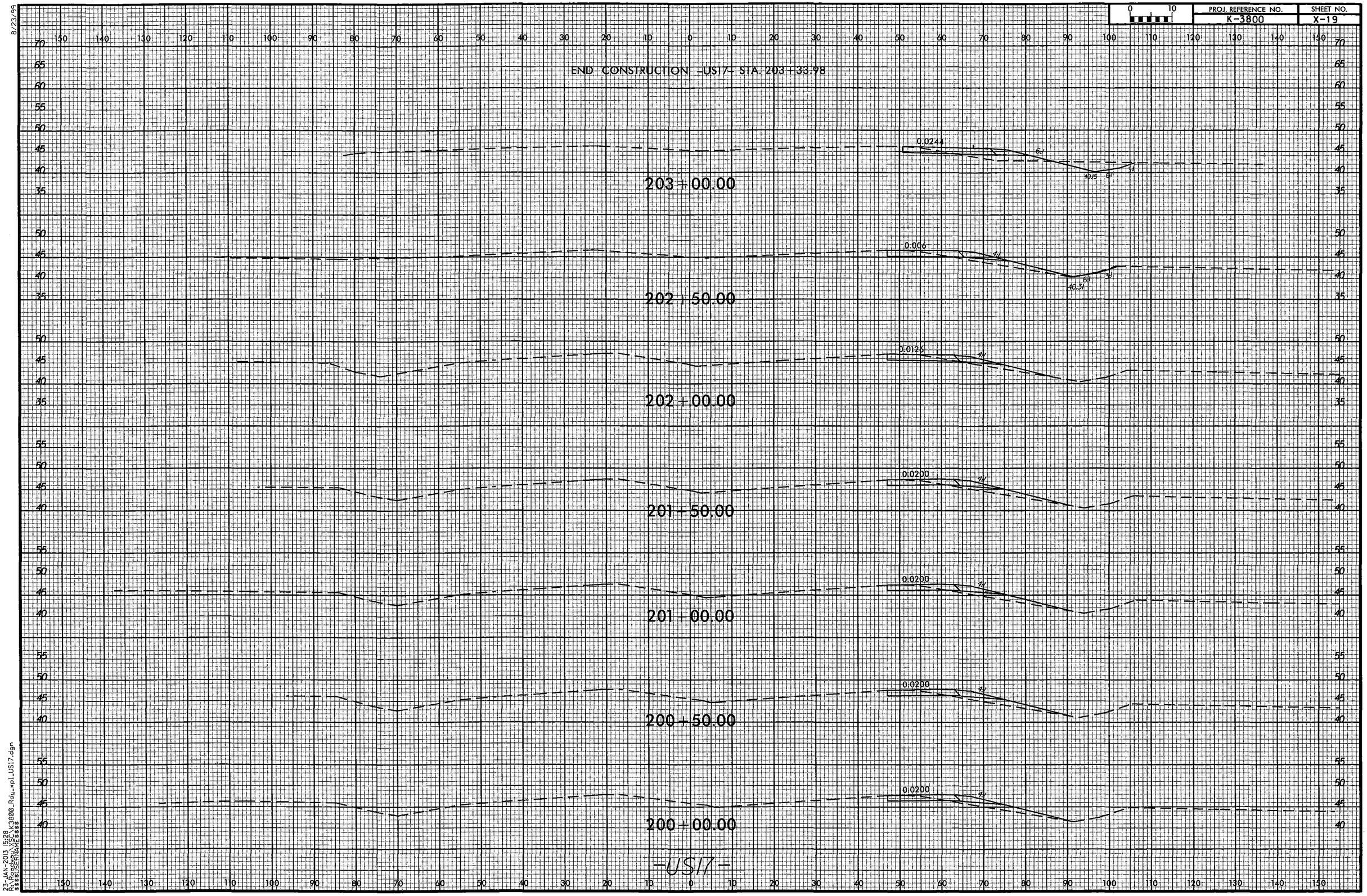

23-JAN-2013 15:28
V:\DGN\K3800_Rdy_xpl_US17.dgn
$$$$USERNAME$$$$