Block Dimensions
Classic 8

General Information

Absorption...Meets or exceeds ASTM C90-75 standards

Compressive strength...3000 PSI Approximate minimum (unless otherwise specified)

Composition . . . High strength, high density, "0" slump concrete

Unit Information

Beveled Classic Unit:

8"H X 18"W X 12"D, 78 Lbs. Approx. . . . . 1.00 Sq. Ft. Face

Straight Classic Unit:

8"H X 18"W X 12"D, 78 Lbs. Approx. . . . . 1.00 Sq. Ft. Face

Colonial 18 Unit:

8"H X 18"W X 12"D, 78 Lbs. Approx. . . . . 1.00 Sq. Ft. Face

Colonial 6/12 Unit:

8"H X 6"/12"W X 12"D, 78 Lbs. Approx. . . . . 1.00 Sq. Ft. Face

Universal Cap

4"H X 18"W Front and 4"H X 14"W Back, 54 Lbs. Approx.
0.50 Sq. Ft. Front, 0.39 Sq. Ft.Back
Average running length is 16" (see installation manual)

Face Options

Face Patterns . . . . Beveled Split Face
Straight Split Face
Colonial Split Face

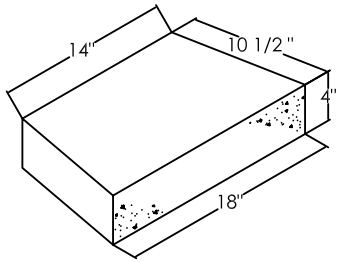

Universal Cap - front

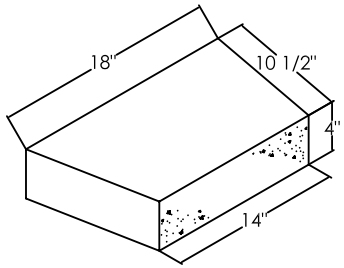

Universal Cap - Back

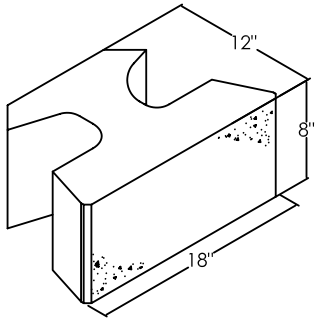

Classic 8 Unit (Straight)

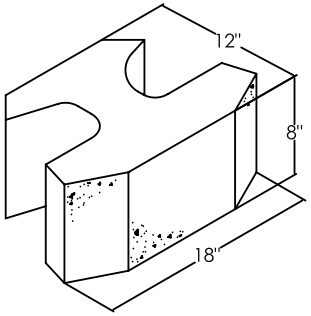

Classic 8 Unit (Beveled)

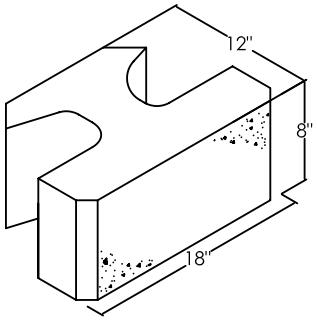

Classic 8 Colonial (18 Unit)

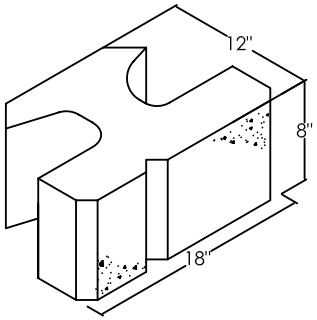

Classic 8 Colonial (6/12 Unit)

This drawing is furnished for preliminary design purposes only, and should not be used for final design drawings or construction drawings without the certification of a professional engineer registered in the state in which the wall will be constructed

No.	Date.	Revision.	By.

Prepared by:

ROCKWOOD® RETAINING WALLS
A better way.

Legend

Impermeable Compacted Fill
Compacted Fill
Native Soil
3/4" Crushed Stone
Leveling Pad
Geogrid

Project Name: XX
Project Location: YY
Drawing Description: Block Dimensions

Prepared For: CCC DDD
Drawn By:
Checked By:
Sheet # Of $
Date: MM/DD/YYYY
Project Number: WWWPRO#