Block Dimensions
Legend® with PCS

General Information

Absorption...meets or exceeds astm c90-75 standards

Compressive strength...3000 psi approximate minimum (Unless otherwise specified)

Composition . . . hight strength, high density, "0" slump concrete

Unit Information

Beveled Legend Unit:

8"H X 18"W X 22"D, 110 lbs. approx. . . . . 1.00 sq. ft. face

Straight Legend Unit:

8"H X 18"W X 22"D, 110 LBS. approx. . . . . 1.00 sq. ft. face

Universal cap

4"H X 18"W Front and 4"H X 14"W back, 54 lbs. approx.
0.50 sq. ft. front, 0.39 sq. ft. back
Average running length is 16" (See installation manual)

Face Options

Face Patterns . . . . Beveled split face
Straight split face

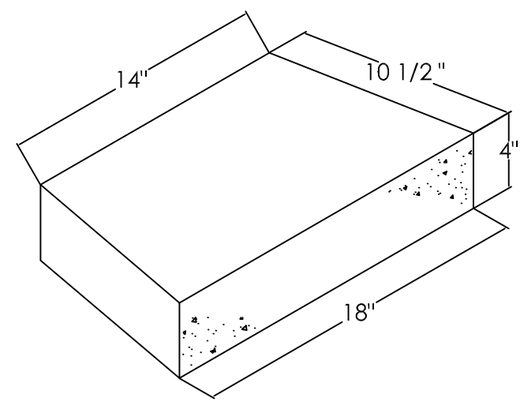

Universal Cap - front

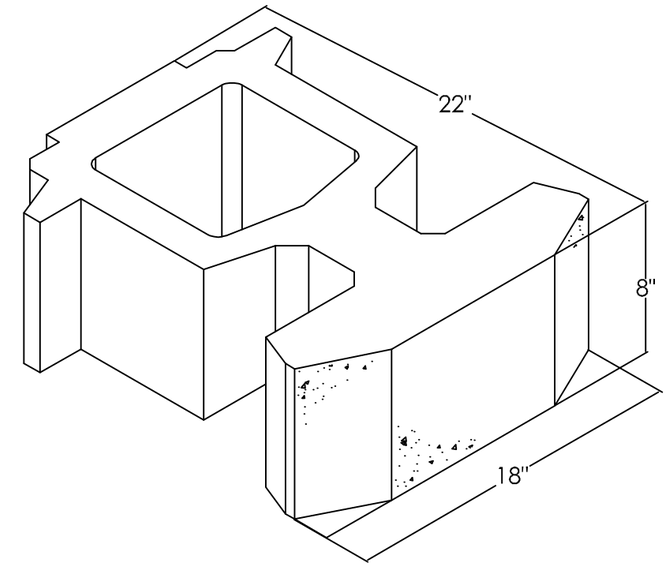

Legend with PCS (Beveled)

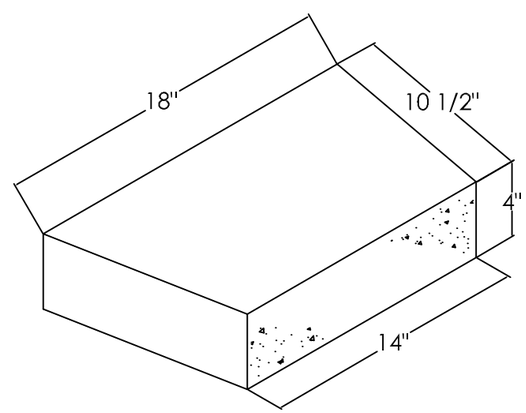

Universal Cap - back

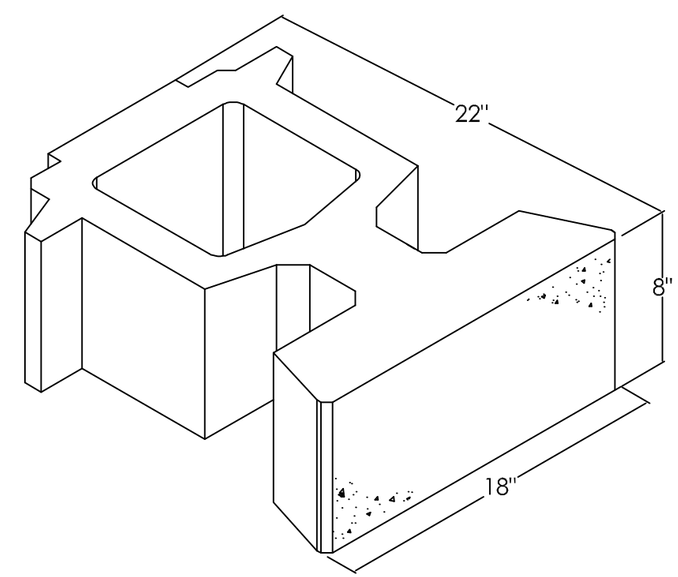

Legend with PCS (Straight)

This drawing is furnished for preliminary design purposes only, and should not be used for final design drawings or construction drawings without the certification of a professional engineer registered in the state in which the wall will be constructed

No.	Date.	Revision.	By.

PREPARED BY:

ROCKWOOD® RETAINING WALLS
A better way.™

Legend

Compacted fill
Native soil
Crushed Rock
Leveling pad
Geogrid

Project Name: XX
Project Location: YY
Drawing Description: Block Dimensions

Prepared for: CCC DDD
Drawn by:
Checked by:
Sheet # of $
Date: MM/DD/YYYY
File/Dwg code: WWWPRO#