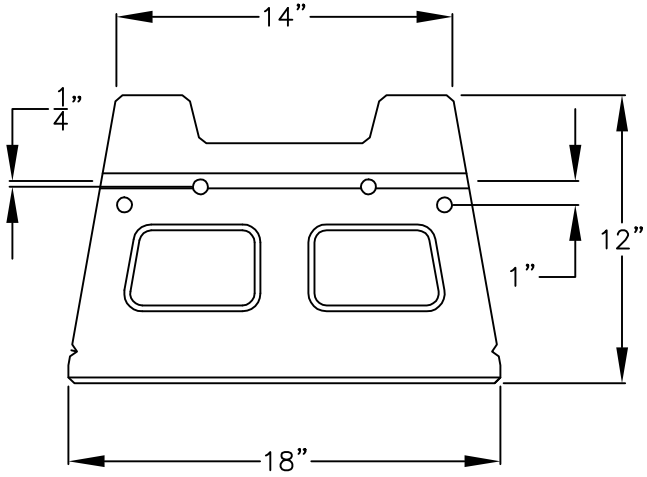

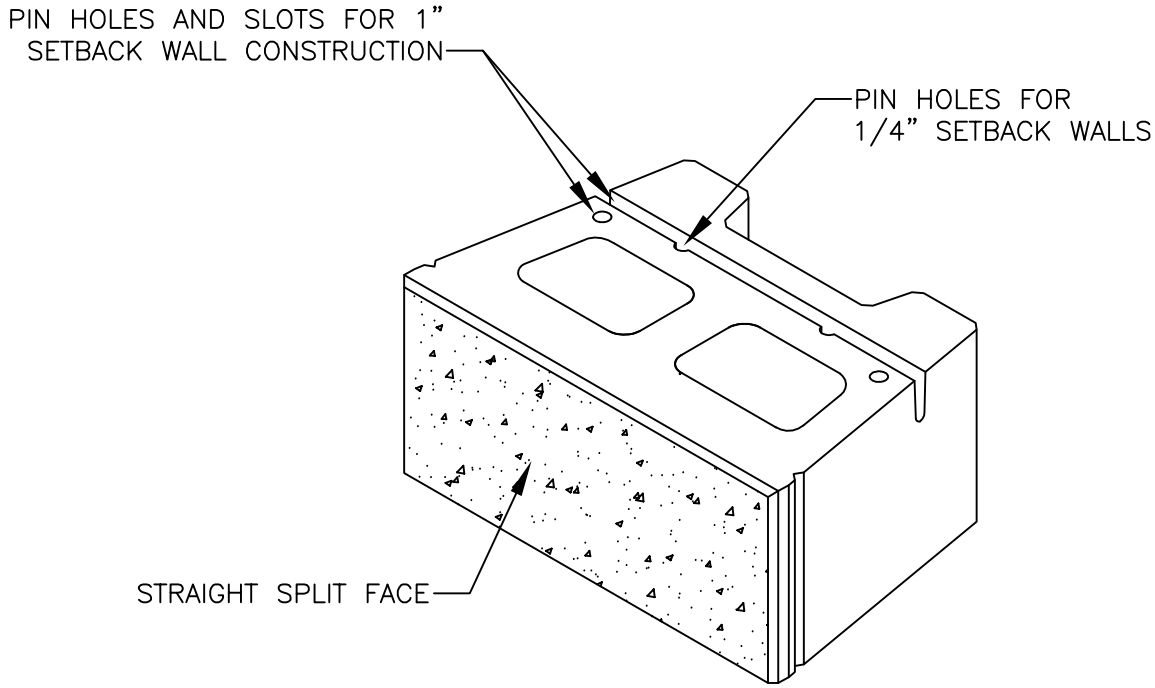

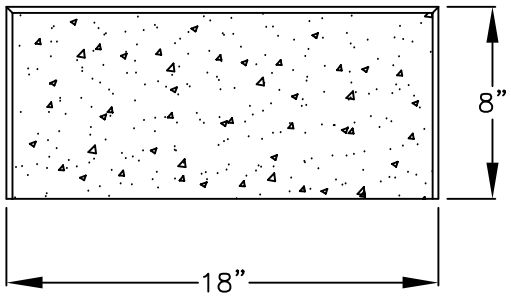

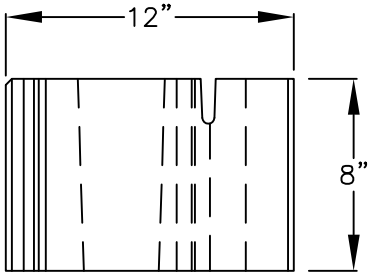

VERSA–LOK SQUARE FOOT UNIT

UNIT DIMENSIONS

SCALE: NONE

THESE PRELIMINARY DETAILS ARE INTENDED AS AN AID IN DESIGNING ATTRACTIVE, DURABLE RETAINING WALLS WITH VERSA–LOK UNITS. FINAL DETERMINATION OF THE SUITABILITY OF ANY INFORMATION OR MATERIAL FOR THE USE CONTEMPLATED, AND ITS MANNER OF USE, IS THE SOLE RESPONSIBILITY OF THE USER. A FINAL PROJECT SPECIFIC DESIGN SHOULD BE PREPARED BY A QUALIFIED, LICENSED, PROFESSIONAL ENGINEER.

VERSA-LOK®
Retaining Wall Systems
(800)770–4525 fax(651)770–4089
6348 Hwy36 Ste1, Oakdale,MN 55128
Solid Solutions.™

VERSA–LOK SQUARE FOOT DETAILS

SQUARE FOOT UNIT

SCALE:	1 1/2"=1'
DRAWN BY:	PPS
CHECKED BY:	
DATE:	10/2007
DWG. NO.	square foot unit