GROUND TO SKY PROJECT

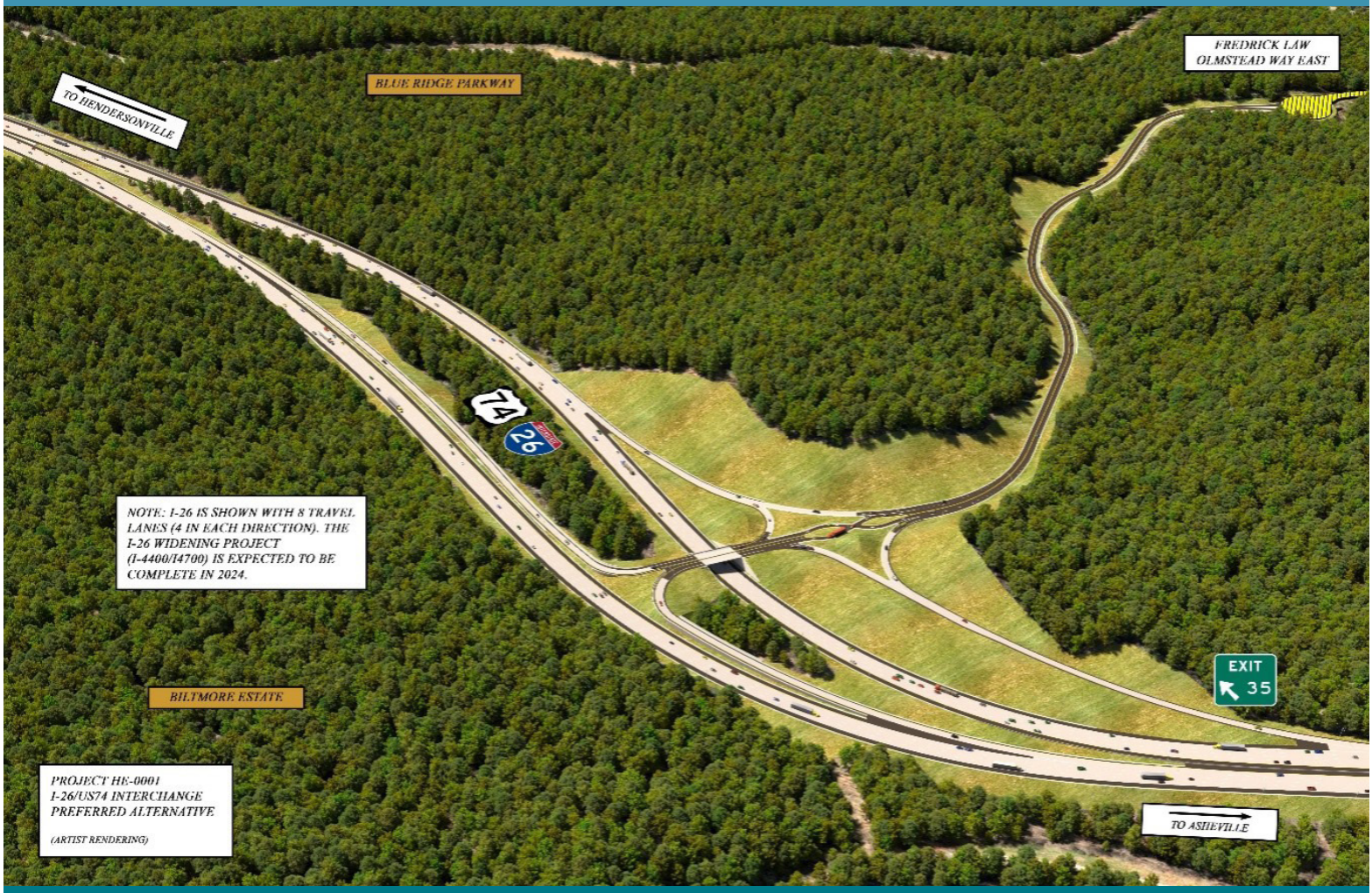

Traffic Analyses

MPDG FFY 2023 and 2024

GRANT APPLICATION

AUGUST 2023

STATE OF NORTH CAROLINA DEPARTMENT OF TRANSPORTATION

Proposed New Interchange on I-26 (Exit 35)

Buncombe County

STIP Project No. HE-0001

WBS No. 49473



Traffic Forecast Report

(This Traffic Forecast Report Replaces the Traffic Forecast approved on June 29, 2021



Prepared For:

North Carolina Department of Transportation

Prepared By:

Patriot Transportation Engineering, PLLC

April 2022

TRAFFIC FORECAST COVER LETTER

April 11, 2022

MEMORANDUM TO: H. McCray Coates
NCDOT Division 13 Project Manager

FROM: Peter Trencansky, PE, PTOE, AICP
Patriot Transportation Engineering, PLLC

SUBJECT: Traffic Forecast for HE-0001
Buncombe County
I-26, Proposed New Interchange (Exit 35) at NC 191 Connector

This forecast has been reviewed and approved by the NCDOT Transportation Planning Division on April 11, 2022. This forecast replaces the traffic forecast approved on June 29, 2021.

Please find attached the 2021 and 2045 traffic forecast for STIP Project HE-0001 in Buncombe County Counties. The proposed project, HE-0001, would provide direct access to I-26 and a connection to the roadway under construction from NC 191 to the future site of the Pratt & Whitney manufacturing facility. This traffic forecast for this project was requested by NCDOT Division 13 in support of project development activities, including environmental documentation and design for the project.

The project is located within the boundaries of the French Broad River Metropolitan Planning Organization (FBRMPO). The following four scenarios are provided in this forecast:

- 2021 Base Year (Existing Conditions)
- 2021 Base Year Build Alternative
- 2045 Future Year No-Build
- 2045 Future Year Build Alternative

Fiscal Constraint

The project is located within the FBRMPO boundaries; therefore, the travel demand model and traffic forecast are fiscally constrained to match the assumptions of the corresponding Metropolitan Transportation Plan (MTP).

The study project was added on January 27,2022, as Amendment #2, to the *French Broad River MPO Metropolitan Transportation Plan 2045* (originally adopted on September 24, 2020).

The 2045 MTP includes the following projects in the area which are anticipated to affect travel patterns on the subject project and are described as follows:

- HS4502 (I-4700) – I-26 Widening from NC 280 to I-40
- HR4514 (I-4400) – I-26 Widening from US 25 to NC 280
- HS4506 (I-2513C) – I-26/I-40/I-240 interchange improvement
- HR4501 (I-2513A) – I-26/I-240 Widening from I-40 to Haywood Rd
- HR4505 (I-2513B) – I-26 Connector from Haywood Rd to Broadway

Patriot Transportation Engineering, PLLC
3008 Anderson Drive, Suite 220
Raleigh, North Carolina 27609
Phone: 919.977.9125

- HR4507 (U-3403B) – NC 191 Widening from Ledbetter Rd to North of Blue Ridge Parkway
- HR4515 (U-3403A) – NC 191 Widening from NC 146 to NC 280
- HD134510 (U-6047) - NC 112 (Sand Hill/Sardis) Widening from NC 191 to US 19/23
- HR4509 (U-2801A) – US 25A (Sweeten Creek Rd) Widening from Rock Hill Road to US 25 (Hendersonville Rd)
- HD134517 – US 25 (Hendersonville Rd) from I-40 to Blue Ridge Parkway – Access Management
- HR4516 – US 25 (Hendersonville Rd) from Blue Ridge Parkway to NC 146 (Long Shoals Rd) – Access Management
- HR4517 – US 25 (Hendersonville Rd) from NC 146 (Long Shoals Rd) to NC 280 (Airport Rd) – Access Management
- HS4510 (I-6054C) – I-40 Widening from SR 1200 (Wiggins Rd) to SR 1224 Monte Vista Rd

Travel Demand Model

A revised version of the French Broad River MPO Travel Demand Model (2015/2045 FBRMPO TDM v1.1, issued 4/28/21), developed in TransCAD version 8 Build 22360 (provided by NCDOT), was utilized as a tool in the development of the forecast.

Forecast Methodology

The 2021 Base Year No-Build traffic volumes and design factors were developed based upon current counts, historic counts and historic AADT trend projections. The 2045 future year no-build traffic volumes generally included the development of compound annual growth rates between two model years. The build alternative volumes generally included the development of diversion rates between like model years with different scenarios. The compound annual growth rates or diversion rates were then applied to the AADT volumes from another scenario to develop initial volumes for each scenario. Engineering judgment adjustments were applied as needed in finalizing the volumes in order to develop a balanced forecast.

Interpolation/Extrapolation

To estimate AADT volumes between 2021 and 2045, straight line interpolation between the 2021 and the 2045 scenarios is acceptable. AADT volumes may be extrapolated for up to two years immediately following 2045. If it is determined that any of these assumptions have become inconsistent with the project and surrounding area activity, please request updated projections at this location.

COVID-19 Pandemic Considerations

Until the effects of COVID-19 on travel patterns and traffic volumes are known, a methodology to project future traffic volumes is needed to allow for the planning and design of projects. At this point the most reasonable approach is to determine the current traffic volumes in the study area and compare them against Pre-COVID data sets. As an additional point of comparison in developing current traffic volumes during the pandemic, the volumes will be normalized to pre-COVID volumes based on a comparison of volume data collected from StreetLight Data, Inc. The normalized volumes provide another measure to compare against when utilizing engineering judgment in the traffic forecasting process. The normalized volumes will essentially equate the current volumes back to pre-pandemic volume based on a comparison of current and pre-COVID traffic volumes.

The effect of this methodology will essentially freeze volumes at their pre-pandemic volume from early-2020 through the end of 2021 (or roughly a 2-year period). The forecast will then project growth based on the currently adopted local plans and travel demand model between 2022 and 2045.

cc: Steve Cannon, Division 13, Division Project Development Engineer (slcannon@ncdot.gov)
NCDOT Traffic Forecast Engineer (trafficforecast@ncdot.gov)
Daniel Sellers, NCDOT Transportation Planning Unit MPO Contact (dcsellers1@ncdot.gov)

Patriot Transportation Engineering, PLLC
3008 Anderson Drive, Suite 220
Raleigh, North Carolina 27609
Phone: 919.977.9125

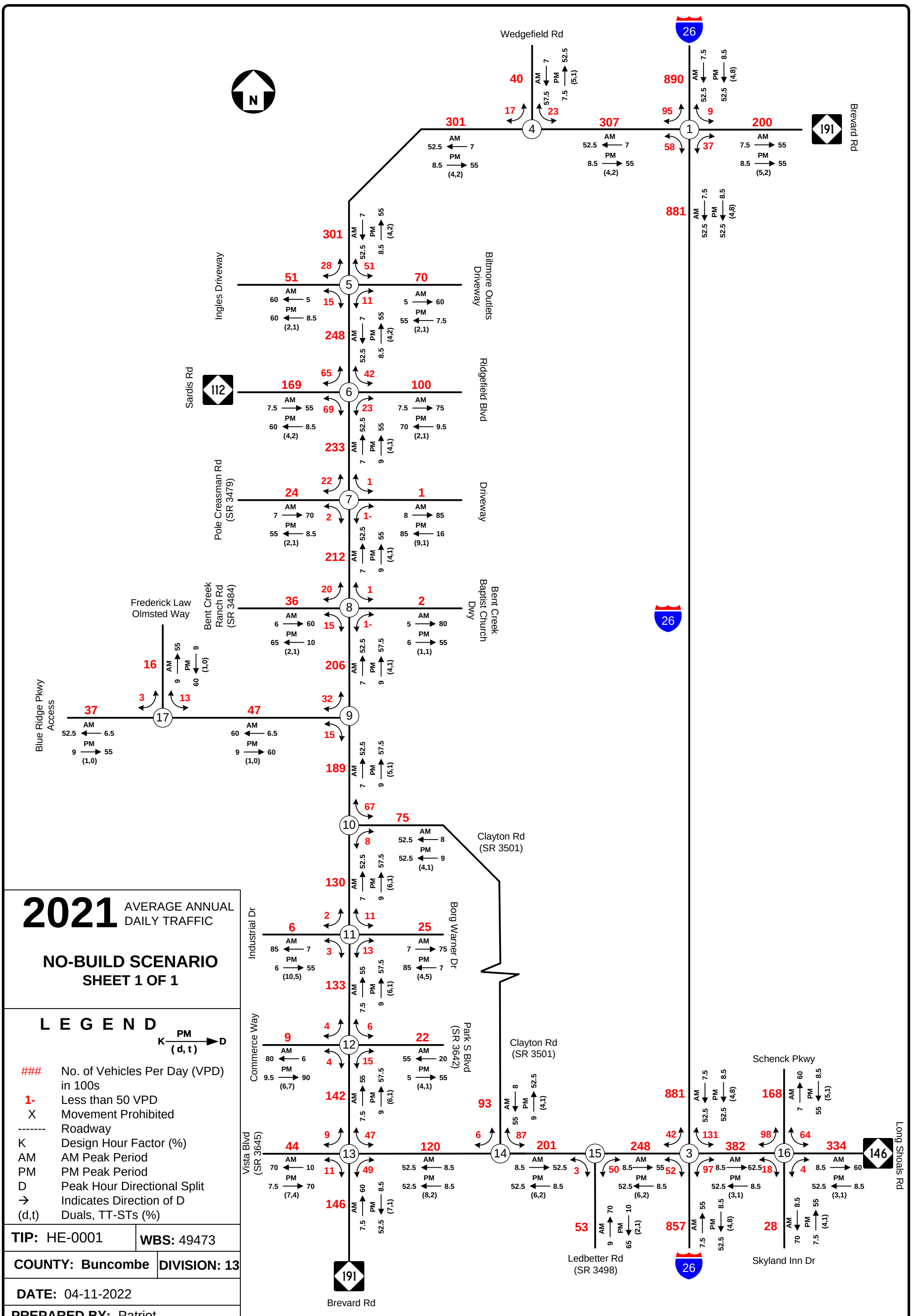

2021 AVERAGE ANNUAL DAILY TRAFFIC

NO-BUILD SCENARIO

SHEET 1 OF 1

L E G E N D

PM
K → D
(d, t)

###	No. of Vehicles Per Day (VPD) in 100s
1-	Less than 50 VPD
X	Movement Prohibited
-------	Roadway
K	Design Hour Factor (%)
AM	AM Peak Period
PM	PM Peak Period
D	Peak Hour Directional Split
→	Indicates Direction of D
(d,t)	Duals, TT-STs (%)

TIP: HE-0001 **WBS:** 49473

COUNTY: Buncombe **DIVISION:** 13

DATE: 04-11-2022

PREPARED BY: Patriot Transportation Engineering, PLLC

LOCATION: I-26/NC 191 Connector

PROJECT: I-26 Future Interchange at NC 191 Connector (Exit 35)

Note: Based on a review of the count data and coordination with the Congestion Management Section the peak hour truck percentages for the peak periods are very similar to the daily percentages; therefore, the unadjusted truck percentages included in this forecast should be used for the traffic analysis.

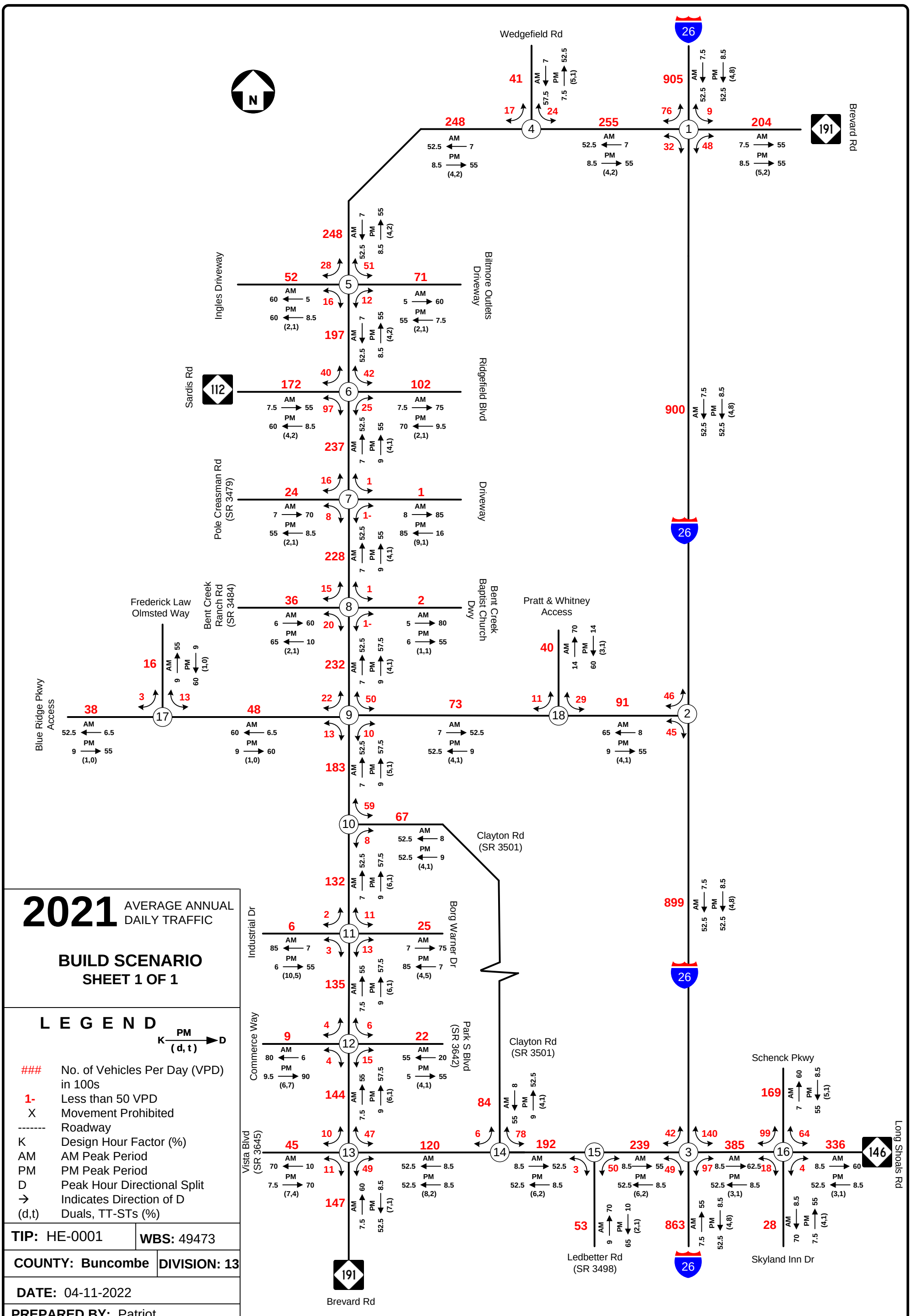

2021 AVERAGE ANNUAL DAILY TRAFFIC

BUILD SCENARIO
SHEET 1 OF 1

L E G E N D

K — PM (d, t) → D

###	No. of Vehicles Per Day (VPD) in 100s
1-	Less than 50 VPD
X	Movement Prohibited
-------	Roadway
K	Design Hour Factor (%)
AM	AM Peak Period
PM	PM Peak Period
D	Peak Hour Directional Split
→	Indicates Direction of D
(d,t)	Duals, TT-STs (%)

TIP: HE-0001 | **WBS:** 49473

COUNTY: Buncombe | **DIVISION:** 13

DATE: 04-11-2022

PREPARED BY: Patriot Transportation Engineering, PLLC

LOCATION: I-26/NC 191 Connector

PROJECT: I-26 Future Interchange at NC 191 Connector (Exit 35)

Note: Based on a review of the count data and coordination with the Congestion Management Section the peak hour truck percentages for the peak periods are very similar to the daily percentages; therefore, the unadjusted truck percentages included in this forecast should be used for the traffic analysis.

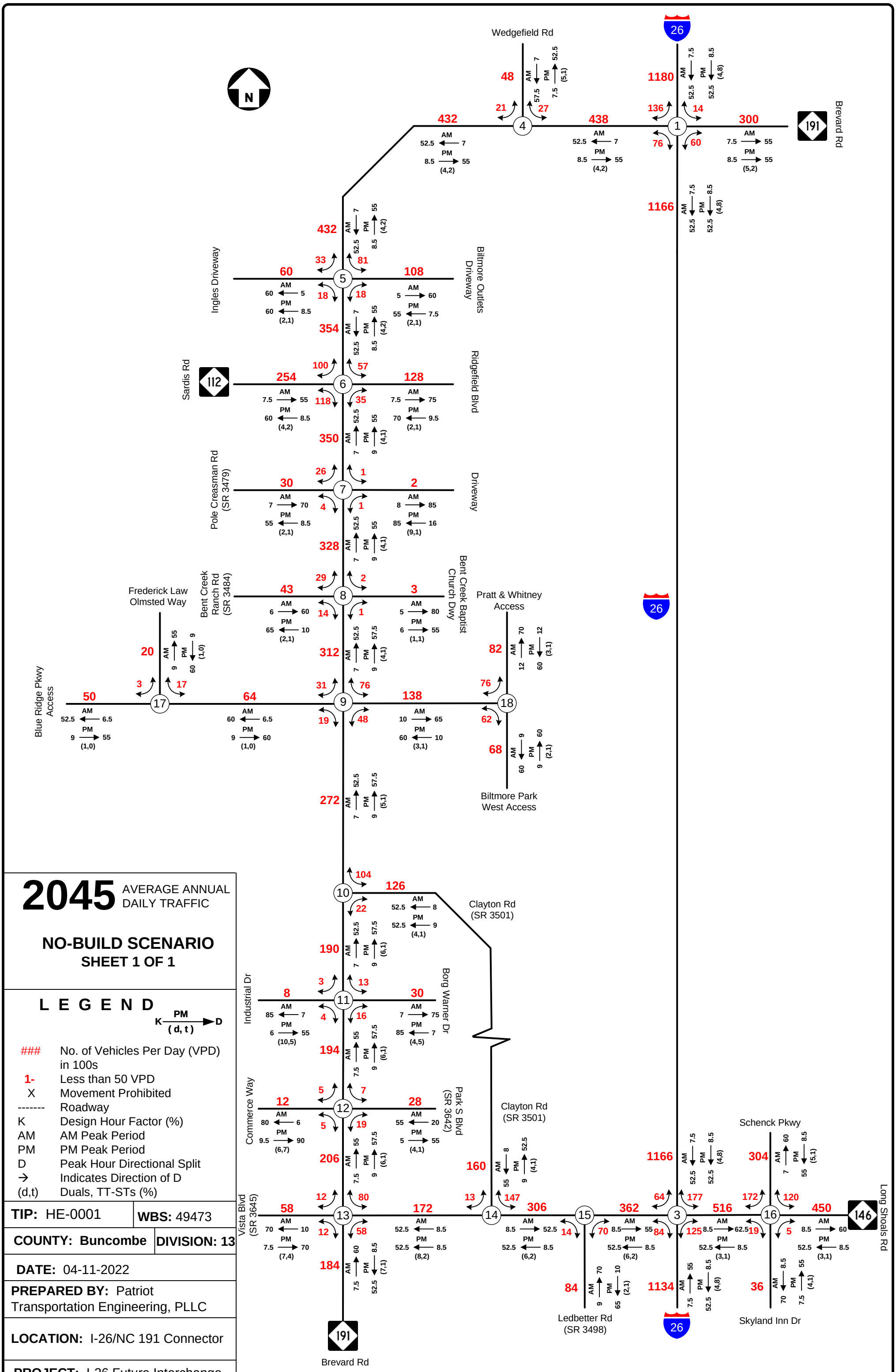

Note: Based on a review of the count data and coordination with the Congestion Management Section the peak hour truck percentages for the peak periods are very similar to the daily percentages; therefore, the unadjusted truck percentages included in this forecast should be used for the traffic analysis.

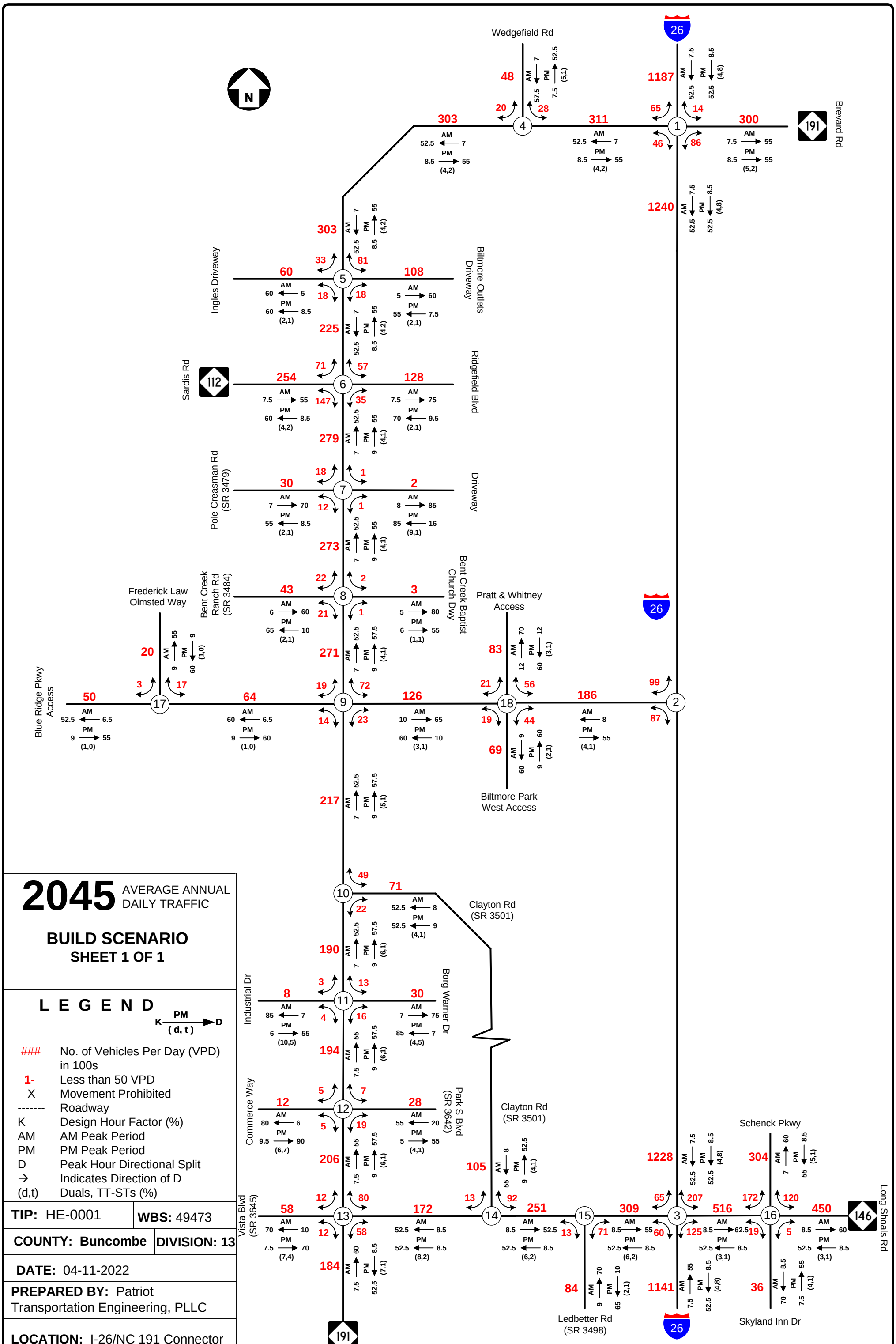

2045 AVERAGE ANNUAL DAILY TRAFFIC

BUILD SCENARIO

SHEET 1 OF 1

L E G E N D

K PM (d, t) D

###	No. of Vehicles Per Day (VPD) in 100s
1-	Less than 50 VPD
X	Movement Prohibited
-------	Roadway
K	Design Hour Factor (%)
AM	AM Peak Period
PM	PM Peak Period
D	Peak Hour Directional Split
→	Indicates Direction of D
(d,t)	Duals, TT-STs (%)

TIP: HE-0001 **WBS:** 49473

COUNTY: Buncombe **DIVISION:** 13

DATE: 04-11-2022

PREPARED BY: Patriot Transportation Engineering, PLLC

LOCATION: I-26/NC 191 Connector

PROJECT: I-26 Future Interchange at NC 191 Connector (Exit 35)

Note: Based on a review of the count data and coordination with the Congestion Management Section the peak hour truck percentages for the peak periods are very similar to the daily percentages; therefore, the unadjusted truck percentages included in this forecast should be used for the traffic analysis.

TABLE OF CONTENTS

1. Project Background 3
1.1 COVID-19 Pandemic Considerations 3
1.2 Project Request Information 3
1.3 Forecast History 4
1.4 Project Description 4
1.5 Area Information 4
1.6 Route Information 4
1.7 Future Area Roadway Improvements – Fiscal Constraint 6
2. Sources of Information and Data 7
2.1 Related Forecasts 7
2.2 Historic AADT 7
2.3 Field Data Collection 7
2.4 Volume Normalization For Effects of COVID-19 10
2.5 Field Investigation 11
2.6 Information from Local Planners 11
2.7 Other Sources 12
3. Base Year 2021 No-Build Traffic Estimate 13
3.1 Methodology 13
3.2 Design Factors 13
3.2.1 Truck Percentages 13
3.2.2 Directional Distribution 14
3.2.3 Design Hour Factor 14
3.3 Traffic Estimate Volumes 15
4. Model Data 17
5. Base Year 2021 Build Traffic Forecasts 19
5.1 Assumptions 19
5.2 Methodology 19
5.3 Design Factors 19
5.4 Traffic Forecast Volumes 20
6. Future Year 2045 No-Build Traffic Forecast 21
6.1 Assumptions 21
6.2 Methodology 22
6.3 Design Factors 22
6.4 Traffic Forecast Volumes 22
7. Future Year 2045 Build Traffic Forecasts 24
7.1 Assumptions 24
7.2 Methodology 24
7.3 Design Factors 24
7.4 Traffic Forecast Volumes 24

LIST OF TABLES

Table 2-1: Collected Traffic Count Locations **9**
Table 4-1: Population Projection Comparison **17**
Table A1: NCDOT Historic AADT **A-3**
Table C1: 2021 Base Year No-Build Traffic Volumes **C-3**
Table C2: 2021 Base Year No-Build Design Data – Truck Percentages **C-5**
Table C3: 2021 Base Year No-Build Design Data – Directional Distribution **C-7**
Table C4: 2021 Base Year No-Build Design Data – Design Hour Factor **C-9**
Table C5: Model Validation **C-11**
Table C6: 2021 Build Traffic Volumes **C-12**
Table C7: 2045 No-Build Traffic Volumes **C-14**
Table C8: 2045 Build Traffic Volumes **C-16**

LIST OF FIGURES

Figure 1-1: Project Vicinity Map **5**
Figure 2-1: Traffic Volume Data Locations **8**

LIST OF APPENDICES

Appendix A: Historic AADT Count Data
Appendix B: Project Correspondence
Appendix C: Traffic Forecast Tables
Appendix D: French Broad River MPO Travel Demand Model Revisions
Appendix E: HE-0001 Traffic Forecast Trip Diversion Figures

1. PROJECT BACKGROUND

Patriot Transportation Engineering, PLLC (Patriot) has been contracted by the North Carolina Department of Transportation (NCDOT) to develop base and future year traffic forecasts for NCDOT State Transportation Improvement Program (STIP) Project HE-0001 (New Interchange on I-26 (Exit 35) at NC 191 Connector) in Buncombe County.

1.1 COVID-19 PANDEMIC CONSIDERATIONS

This forecast was developed during the ongoing COVID-19 pandemic that began in March 2020 and was ongoing during the completion of the forecast. At this time, the long-term effect on traffic volumes and travel patterns is largely unknown. As of February 2021, FHWA reported that traffic was approximately 8.2 percent lower in February 2021 than it was in the month proceeding the pandemic in February 2020 (https://www.fhwa.dot.gov/policyinformation/travel_monitoring/21febtvt/21febtvt.pdf).

Prior to the pandemic VMT had been increasing steadily since 2014 (as shown in the graphic at right). According to the National Bureau of Economic Research (NBER) the US economy was in the midst of an economic expansion from June 2009 through February 2020 and entered a recession at the beginning of the COVID pandemic through April 2021.

Figure - 1. Moving 12-Month Total on ALL Roads Page 9

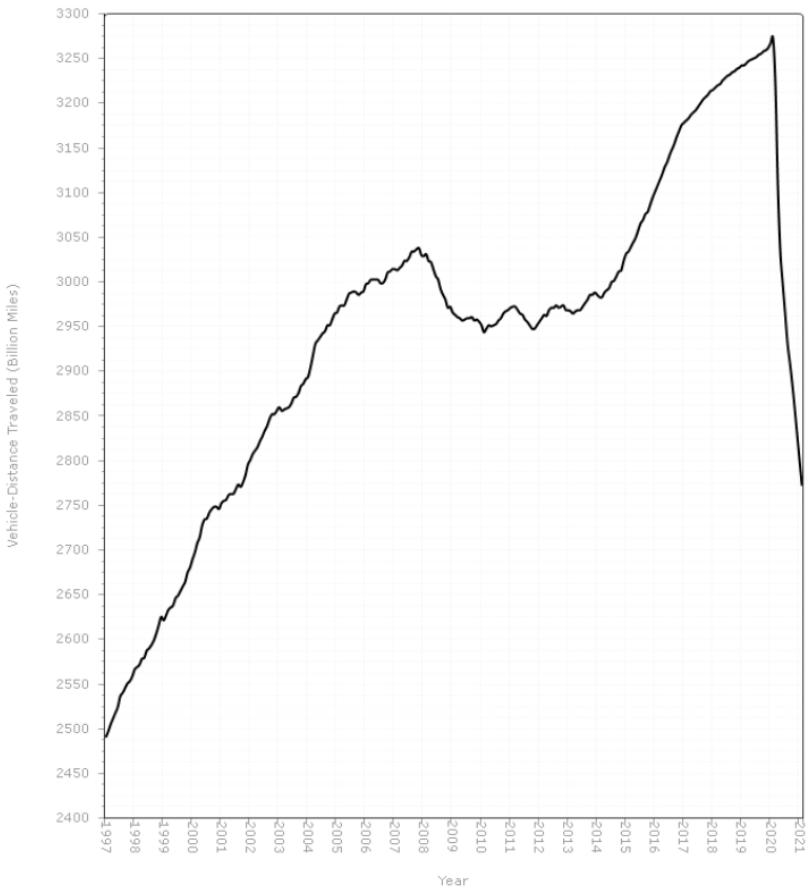

Until the effects of COVID-19 on travel patterns and traffic volumes are known, a methodology to project future traffic volumes is needed to allow for the planning and design of projects. At this point the most reasonable approach is to determine the current traffic volumes in the study area and compare them against Pre-COVID data sets. As an additional point of comparison in developing current traffic volumes during the pandemic, the volumes will be normalized to pre-COVID volumes based on a comparison of volume data collected from StreetLight Data, Inc. The normalized volumes provide another measure to compare against when utilizing engineering judgment in the traffic forecasting process. The normalized volumes will essentially equate the current volumes back to pre-pandemic volume based on a comparison of current and pre-COVID traffic volumes.

The effect of this methodology will essentially freeze volumes at their pre-pandemic volume from early-2020 through the end of 2021 (or roughly a 2-year period). The forecast will then project growth based on the currently adopted local plans and travel demand model between 2022 and 2045.

1.2 PROJECT REQUEST INFORMATION

The traffic forecast for this project was requested by NCDOT Division 13 in support of project development activities, including environmental documentation and design for the project. The scope of work for the original traffic forecast

was finalized in April 2021 with the traffic forecast being completed in June 2021. The update to the forecast was scoped in March 2022.

For the purposes of the environmental document, it was decided through project scoping with NCDOT that Base Year scenarios would use 2021 and Future Year scenarios would use 2045. The 2021 Base Year includes the No-Build traffic estimate and Build traffic forecast for a single alternative, and the 2045 Future Year traffic forecast includes No-Build for one scenario and a Build scenario for a single alternative.

1.3 FORECAST HISTORY

This is an update to the first forecast for the proposed project that was developed in June 2021 and includes the same base year data with the future year forecast being updated based on the FBRMPO TDM v 1.2.

1.4 PROJECT DESCRIPTION

With HE-0001, NCDOT proposes to provide direct access to I-26 and a connection to the roadway under construction from NC 191 to the future site of the Pratt & Whitney manufacturing facility. The study project was added on January 27,2022, as Amendment #2, to the *French Broad River MPO Metropolitan Transportation Plan 2045* (originally adopted on September 24, 2020).

1.5 AREA INFORMATION

Buncombe County has an estimated population of 238,300 citizens based on 2010 census data and a projected 2019 population of 262,700 according to the North Carolina Office of State Budget and Management (NCOSBM). The county covers approximately 660 square miles and consists of several cities and towns including; Asheville, Biltmore Forest, Black Mountain, Montreat, Weaverville, and Woodfin. Asheville is the county seat of Buncombe County.

The project area is in the southern portion of Buncombe County, just north of the Buncombe-Henderson County line. The project location map for the HE-0001 forecast is shown on Figure 1-1: Project Vicinity Map.

1.6 ROUTE INFORMATION

The following roadways within the study area are classified by the Federal Highway Administration (FHWA):

I-26 is classified as an Interstate through the study area. I-26 runs from Charleston, SC to Kingsport, TN including approximately 30 miles in Buncombe County. The study area includes interchanges at Brevard Road (NC 191) (Exit 33) and Long Shoals Rd (NC 146) (Exit 37). The speed limit along I-26 is 60 mph.

Brevard Road (NC 191) is classified as a minor arterial within the study area and begins at an intersection with US 25 Business (Asheville Highway) in the city of Hendersonville in Henderson County and ends at US 19 Business/US 23 Business (Haywood Road) in the city of Asheville in Buncombe County. The speed limit along Brevard Road (NC 191) is 45 mph.

Sardis Road (NC 112) is classified as minor arterial within the study area and begins at its western end at US 19/US 23 (Smokey Park Highway) in Enka and ends at Brevard Road (NC 191) within the study area. The speed limit along Sardis Rd (NC 112) is 45 mph.

Long Shoals Road (NC 146) is classified as a minor arterial within the study area and begins at NC 191 and runs for 3.5 miles before reaching its eastern end at U.S. Route 25. The speed limit along Long Shoals Road (NC 146) is 35 mph west of Clayton Road and 45 mph east of Clayton Road.

The **Blue Ridge Parkway** is classified as a minor arterial within the study area and is a federal roadway that begins at US 441 in Swain County, NC and runs for 469 miles to its terminus at US 250 in Rockfish Gap, VA. The Parkway has an entrance from Brevard Road (NC 191) within the study area, prohibits commercial vehicles, and has a speed limit of 45 mph.

All other roadways included in the project forecast are classified as *Local Roads*.

Figure 1-1: Project Vicinity Map

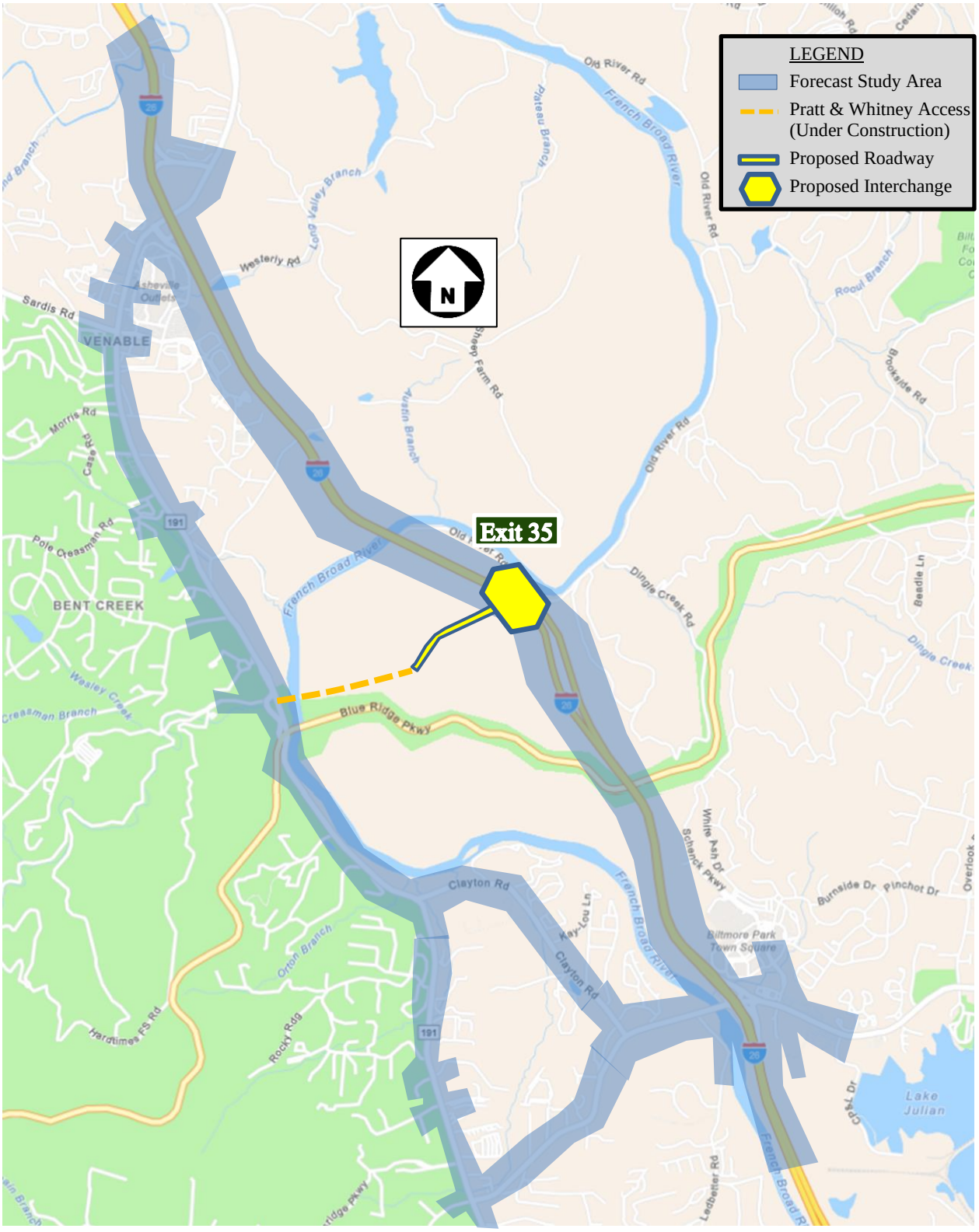

1.7 FUTURE AREA ROADWAY IMPROVEMENTS – FISCAL CONSTRAINT

The project is located within the French Broad River Metropolitan Planning Organization (FBRMPO) boundaries; therefore, the travel demand model and traffic forecast are fiscally constrained to match the assumptions of the corresponding Metropolitan Transportation Plan (MTP).

The *French Broad River MPO Metropolitan Transportation Plan 2045* (adopted on September 24, 2020 and amended on January 27, 2022) (2045 MTP) includes the following projects in the area which are anticipated to affect travel patterns on the subject project and are described as follows:

- HS4502 (I-4700) – I-26 Widening from NC 280 to I-40
- HR4514 (I-4400) – I-26 Widening from US 25 to NC 280
- HS4506 (I-2513C) – I-26/I-40/I-240 interchange improvement
- HR4501 (I-2513A) – I-26/I-240 Widening from I-40 to Haywood Rd
- HR4505 (I-2513B) – I-26 Connector from Haywood Rd to Broadway
- HR4507 (U-3403B) – NC 191 Widening from Ledbetter Rd to North of Blue Ridge Parkway
- HR4515 (U-3403A) – NC 191 Widening from NC 146 to NC 280
- HD134510 (U-6047) - NC 112 (Sand Hill/Sardis) Widening from NC 191 to US 19/23
- HR4509 (U-2801A) – US 25A (Sweeten Creek Rd) Widening from Rock Hill Road to US 25 (Hendersonville Rd)
- HD134517 – US 25 (Hendersonville Rd) from I-40 to Blue Ridge Parkway – Access Management
- HR4516 – US 25 (Hendersonville Rd) from Blue Ridge Parkway to NC 146 (Long Shoals Rd) – Access Management
- HR4517 – US 25 (Hendersonville Rd) from NC 146 (Long Shoals Rd) to NC 280 (Airport Rd) – Access Management
- HS4510 (I-6054C) – I-40 Widening from SR 1200 (Wiggins Rd) to SR 1224 Monte Vista Rd

2. SOURCES OF INFORMATION AND DATA

The following sections describe the various information and data sources used in the development of the traffic forecast.

2.1 RELATED FORECASTS

Past traffic forecasts in the vicinity of the proposed project can potentially be utilized as a tool when preparing the traffic forecast. The following recent forecasts were identified and considered in the development of this forecast:

- I-2513 – I-26 Asheville Connector from I-40 to US 19-23-70 (2016)
- I-4400/I-4700 – I-26 Widening from US 25 to I-40 (2019)
- U-3403A/B – NC 191 Widening from NC 280 to North of Blue Ridge Parkway (2017)
- U-6047 – NC 112 Widening from SR 3446 (Enka Lake Rd) to NC 191 (2017)

2.2 HISTORIC AADT

Existing traffic count data for study area roadways from 1990 to 2019 was provided by the NCDOT Traffic Survey Group (TSG). Data sources included:

- NCDOT TSG Average Annual Daily Traffic (AADT) history from 1990 to 2018

The locations of the historic traffic data counts are shown in Figure 2-1.

The complete 20-year AADT history for each location is found in Appendix A.

2.3 FIELD DATA COLLECTION

Project-specific counts were taken on April 20, 2021 by Quality Counts, LLC and included seventeen 13-hour turning movement counts and three 14-hour manual classification counts. Due to the counts being collected during a period that was still experiencing the effects of the COVID-19 pandemic, historic traffic counts within the study area were also collected from publicly available sources. The traffic count locations are listed in Table 2-1 and are displayed in Figure 2-1.

The traffic count locations fall under the following TSG ATR classifications:

- ATR Group 1 (The most dominant group in the State. Mostly rural in nature and is predominantly used for count locations on nonurban primary routes and all rural and most urban secondary roads).
- ATR Group 4 (predominantly found in areas where land use is characterized as urban, with dense, mixed development. Factors from this group are predominantly applied to urban primary routes and higher volume secondary and local routes in large urban areas).
- ATR Group 11 (applies to urban interstate and some rural locations strongly influenced by nearby large urban areas).

The ATR categories for each count were reviewed through the NCDOT GIS mapping application. The 48-hour vehicle classification counts (VSCs) were converted to 24-Hour volumes by dividing the 48-Hour counts by two and then applying the correct seasonal adjustment factors. The turning movement counts (TMCs) were converted to 24-Hour volumes by utilizing the NCDOT Traffic Survey Partial Weekday Count Expansion Factors (November 2015). The count expansion factors were also compared to the count data from the 48-hour count data and determined to be adequate.

Figure 2-1: Traffic Volume Data Locations

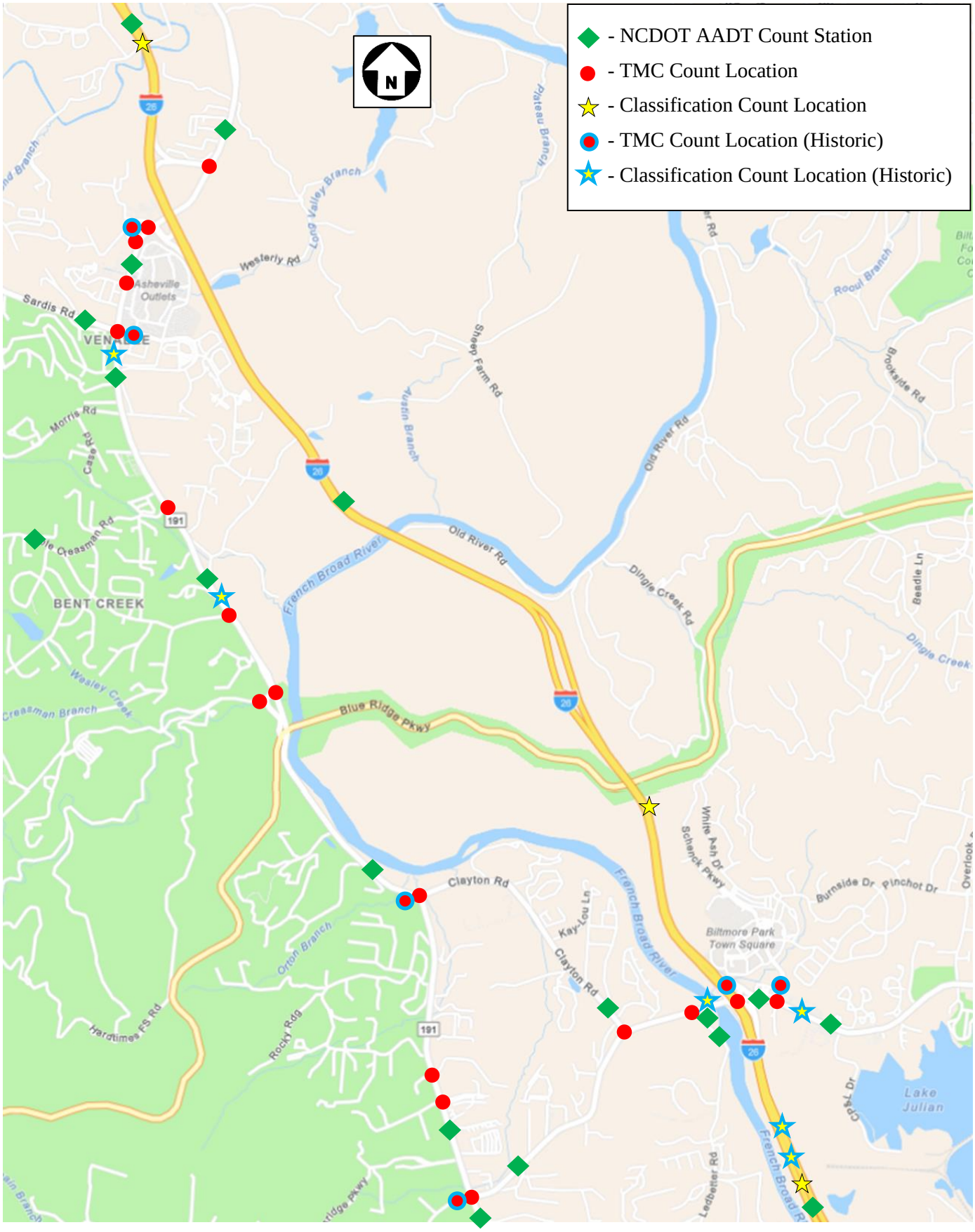

Table 2-1: Collected Traffic Count Locations

Project Specific Count Data							
Location	**Count Type**	**Date(s)**	**County**	**Count ID**	**Count Firm**	**ATR Group**	**Seasonal Adjustment Factor**
I-26 WB Ramps @ Brevard Rd (NC 191)	13-hr TMC	4/20/2021	Buncombe	15411701	Quality Counts	11 / 4	0.97 / 0.89
I-26 EB Ramps @ Brevard Rd (NC 191)	13-hr TMC	4/20/2021	Buncombe	15411702	Quality Counts	11 / 4	0.97 / 0.89
I-26 @ Long Shoals Rd (NC 146)	13-hr TMC	4/20/2021	Buncombe	15411703	Quality Counts	11 / 1	0.97 / 0.99
Brevard Rd (NC 191) @ Wedgefield Rd	13-hr TMC	4/20/2021	Buncombe	15411704	Quality Counts	4 / 1	0.89 / 0.99
Brevard Rd (NC191) @ Biltmore Outlets Dwy/Ingles Dwy	13-hr TMC	4/20/2021	Buncombe	15411705	Quality Counts	4 / 1	0.89 / 0.99
Brevard Rd (NC 191) @ Sardis Rd (NC 112)/Ridgefield Blvd	13-hr TMC	4/20/2021	Buncombe	15411706	Quality Counts	4 / 1	0.89 / 0.99
Brevard Rd (NC 191) @ Pole Creasman Road (SR 3479)	13-hr TMC	4/20/2021	Buncombe	15411707	Quality Counts	4 / 1	0.89 / 0.99
Brevard Rd (NC 191) @ Bent Creek Ranch Road (SR 3484)	13-hr TMC	4/20/2021	Buncombe	15411708	Quality Counts	4 / 1	0.89 / 0.99
Brevard Rd (NC 191) @ Blue Ridge Parkway Access	13-hr TMC	4/20/2021	Buncombe	15411709	Quality Counts	4 / 1	0.89 / 0.99
Brevard Rd (NC 191) @ Clayton Rd (SR 3501)	13-hr TMC	4/20/2021	Buncombe	15411711	Quality Counts	4 / 1	0.89 / 0.99
Brevard Rd (NC 191) @ Industrial Drive/Borg Warner Drive	13-hr TMC	4/20/2021	Buncombe	15411712	Quality Counts	1	0.99
Brevard Rd (NC 191) @ Commerce Way/Park S Blvd (SR 3642)	13-hr TMC	4/20/2021	Buncombe	15411713	Quality Counts	1	0.99
Brevard Rd (NC 191) @ Long Shoals Rd (NC 146)/Vista Blvd	13-hr TMC	4/20/2021	Buncombe	15411714	Quality Counts	1	0.99
Long Shoals Road (NC 146) @ Clayton Road (SR 3501)	13-hr TMC	4/20/2021	Buncombe	15411715	Quality Counts	1	0.99
Long Shoals Road (NC 146) @ Ledbetter Rd (SR 3498)	13-hr TMC	4/20/2021	Buncombe	15411716	Quality Counts	1	0.99
Long Shoals Rd (NC 146) @ Schenck Pkwy/Skyland Inn Dr	13-hr TMC	4/20/2021	Buncombe	15411717	Quality Counts	1	0.99
Blue Ridge Parkway Access @ Fredrick Law Olmstead Way	13-hr TMC	4/20/2021	Buncombe	15411710	Quality Counts	1	0.99
I-26 North of Brevard Rd (NC 191)	14-hr MC	4/20/2021	Buncombe	15411718	Quality Counts	11	0.97
I-26 between Brevard Rd (NC 191) and Long Shoals Rd (NC 146)	14-hr MC	4/20/2021	Buncombe	15411719	Quality Counts	11	0.97
I-26 South of Long Shoals Rd (NC 146)	14-hr MC	4/20/2021	Buncombe	15411720	Quality Counts	11	0.97
Historic Count Data							
Location	**Count Type**	**Date(s)**	**County**	**Count ID**	**Count Firm**	**ATR Group**	**Seasonal Adjustment Factor***
Brevard Rd (NC 191) @ Clayton Rd (SR 3501)	13-hr TMC	3/24/2016	Buncombe	16-14252	The Traffic Group	1	0.99
Brevard Rd (NC 191) @ Long Shoals Rd (NC 146)/Vista Blvd (SR 3645)	13-hr TMC	9/22/2016	Buncombe	1616078	V&M	1	0.94

I-26 Ramp @ Brevard Rd (NC 191)/Rocky River Ridge	13-hr TMC	1/27/2017	Buncombe	17-06097	Mattern & Craig	4 / 1	0.99 / 0.86
Brevard Rd (NC 191) @ Sardis Road (NC 112)/Ridgefield Boulevard	13-hr TMC	5/23/2017	Buncombe	17-14638	The Traffic Group	4 / 1	10.2 / 0.97
I-26 @ Long Shoals Rd (NC 146)	13-hr TMC	17-14722	Buncombe	17-14722	The Traffic Group	11 / 1	0.95 / 0.97
Long Shoals Road (NC 146) and Schenck Parkway/Skyland Inn Drive	13-hr TMC	8/30/2017	Buncombe	17-14723	The Traffic Group	1	0.97
I-26 - South of Long Shoals Rd (NC 146)	14-hr MC	7/6/2017	Buncombe	17-03416	Greenlight Traffic Services, Inc	11	0.92
I-26 - South of Long Shoals Rd (NC 146)	14-hr MC	3/19/2018	Buncombe	18-14278	The Traffic Group	11	1.00
Brevard Rd (NC 191) - South of NC 112	48-hr VSC	4/24/18-4/25/18	Buncombe	110000098	NCDOT	4	0.89 / 0.88
Brevard Rd (NC 191) - North of Bent Creek Ranch Rd	48-hr VSC	4/30/18-5/1/18	Buncombe	110000173	NCDOT	4	0.90 / 0.89
Long Shoals Rd (NC 146) - East of Ledbetter Rd (SR 3498)	48-hr VSC	2/25/20-2/26/20	Buncombe	110000149	NCDOT	1	1.07 / 1.06
Long Shoals Rd (NC 146) - East of Skyland Inn Dr	48-hr VSC	2/25/20-2/26/20	Buncombe	110000689	NCDOT	1	1.07 / 1.06

Note: TMC = turning movement count; MC = manual classification count; VSC = volumes, speed, classification count

2.4 VOLUME NORMALIZATION FOR EFFECTS OF COVID-19

Due to the project specific counts being collected while the effects of the COVID-19 pandemic were ongoing, the count data was normalized to pre-COVID levels as a basis of comparison to historic trends and counts taken before the onset of the pandemic. The methodology to normalize the count data included comparison of volume data for comparable periods both before COVID and when the counts were collected. Data from StreetLight Data, Inc. was utilized to determine the normalization factors.

Traffic data for the study area was extracted from StreetLight Data for March 2019 and March 2021. The timeframes selected are based on March 1-15, 2021 being the most recent data set that is currently available at the individual roadway level. The best means of comparison is to compare it to the same month in a previous year; however, the effects of the pandemic began in March 2020; therefore, March 2019 was determined to be the most appropriate data set for comparison.

The StreetLight Data comparison for the study area shows the following by Facility Type:

Facility Type	March 2019 Volume	March 2021 Volume	Normalization Factor
Interstate	136,653	113,030	1.209
Arterial	113,788	96,582	1.178
Local	31,431	27,318	1.151

In addition to the March 1-15, 2021 data for the study area, StreetLight Data has County level data for Vehicle Miles Traveled (VMT) for each day. On March 23, 2020, Governor Roy Cooper issued Executive Order No. 204 *Further Easing of Restrictions on Businesses and Gatherings*. Therefore, as a further normalization method the VMT in Buncombe County for the week of March 7-13, 2021 was compared to the VMT the week that the counts were taken, April 18-24, 2021 and are summarized in the following table:

Vehicle Miles Traveled (VMT)	March 7-13, 2021	April 18-24, 2021	Normalization Factor
Buncombe County	12,484,300	13,014,300	0.959

Therefore, combining the two normalization factors into a single normalization factor normalizes the April 2021 project specific counts to those from before the pandemic began in 2019. The overall normalization factor shown in the following table is multiplied by the 2021 collected AADT to determine the COVID Normalized AADT:

Facility Type	March 2019 to March 2021 Traffic Factor	March 2021 to April 2021 VMT Factor	Normalization Factor
Interstate	1.209	0.959	1.160
Arterial	1.178	0.959	1.130
Local	1.151	0.959	1.104

Source: StreetLight Data, Inc. Insight (Data Collected May 3, 2021)

2.5 FIELD INVESTIGATION

An orientation field visit was taken as part of the traffic forecast initiation process. The field visit was taken on April 23, 2021. The following observations were noted:

- The land use along Brevard Rd (NC 191) is primarily commercial on the north end with some residential approaching the Blue Ridge Parkway. Between the Blue Ridge Parkway and Long Shoals Rd (NC 146) the land use is a mix of residential, commercial, and industrial.
- The land use along Long Shoals Rd (NC 146) is primarily residential to the east of Brevard Rd (NC 191) and mostly commercial approaching and at the I-26 interchange.
- There are several new apartment complexes being built along the project corridor. One is on Brevard Rd (NC 191) just north of Long Shoals Rd (NC 146) and two are on Long Shoals Rd (NC 146) on both sides of the road about a half mile east of Brevard Rd (NC 191).
- The main gated access to The Cliffs at Walnut Cove, golf course and luxury home, is on Brevard Rd (NC 191) just north of Long Shoals Rd (NC 146).
- There is a large apartment complex and a new housing development, as well as a large church complex on Clayton Rd between Brevard Rd (NC 191) and Long Shoals Rd (NC 146).
- The traffic flow was evenly distributed in both the southbound and northbound directions on Brevard Rd (NC 191). Approaching the I-26 interchange at the north of the project, traffic did become a little heavier in the northbound direction.

2.6 INFORMATION FROM LOCAL PLANNERS

Questionnaires were sent to, completed by or discussed with the following individuals to assist in understanding the project and traffic forecast study area:

- *Steve Cannon, Division 13, Division Project Development Engineer
- *Brendan Merithew, Division 13 Project Team Lead
- H. McCray Coates, Division 13 Division Project Manager

- *Anna Henderson, Division 13, Division Traffic Engineer
- Christopher Medlin, Division 13, District 2 Engineer
- James Upchurch, NCDOT Transportation Planning Division (Mountains Group)
- *Daniel Sellers, NCDOT Transportation Planning Division
- *Tristan Winkler, FBRMPO, Director
- Nick Kroncke, FBRMPO, Transportation Planner
- *Nathan Pennington, Buncombe County, Planning & Development Director
- *William High, Buncombe County, Planning & Development
- *Ken Putnam, City of Asheville, Transportation Department Director
- *Todd Okolichany, City of Asheville, Planning and Urban Design Director
- *Shannon Tuch, City of Asheville Principal Planner
- *Stacy Merten, City of Asheville Principal Long Range Planner
- *Stephanie Dahl, City of Asheville Director of Strategic Development

Individuals who provided a response are denoted with an *. Detailed information from the questionnaires is included in Appendix B.

2.7 OTHER SOURCES

Data sources used that are not listed in Sections 2.1 through 2.6 include:

North Carolina Department of Transportation. *State Transportation Improvement Program.* April 2021. Available: https://connect.ncdot.gov/projects/planning/STIPDocuments1/NCDOT%20Current%20STIP.pdf

French Broad River Metropolitan Planning Organization. *The French Broad River MPO Metropolitan Transportation Plan 2045.* Adopted September 24, 2020. Available: http://frenchbroadrivermpo.org/wp-content/uploads/2020/07/MTP_2045_Web.pdf

French Broad River Metropolitan Planning Organization. *Interactive Project Map.* Available: https://arcg.is/fG81S

NCDOT Functional Classification Maps. Available: http://ncdot.maps.arcgis.com/home/webmap/viewer.html?layers=029a9a9fe26e43d687d30cd3c08b1792

NCDOT AADT Mapping Application. Available: http://ncdot.maps.arcgis.com/apps/webappviewer/index.html?id=5f6fe58c1d90482ab9107ccc03026280

North Carolina Office of State Budget and Management, County/State Population Projections. Available: https://www.osbm.nc.gov/facts-figures/population-demographics/state-demographer/countystate-population-projections/

3. BASE YEAR 2021 NO-BUILD TRAFFIC ESTIMATE

3.1 METHODOLOGY

A review of previous traffic forecasts, field-collected traffic counts (both as collected and normalized for COVID), area AADT history, historic count data and engineering judgment serve as the basis for the 2021 Base Year No-Build traffic estimate. After careful review for reasonableness checks, the 14-Hour manual classification counts and 13-Hour TMCs were first converted to AADT volumes by using the appropriate NCDOT TSG seasonal adjustment factors and seasonal adjustment factors. The project specific count data was all converted to a normalized volume that equated it back to the conditions that existed pre-COVID based on the normalization factor discussed in Section 2.4.

A variation of the NCDOT Traffic Forecast Utility (TFU) spreadsheet was also a major tool used in the determination of the traffic estimate volumes. The NCDOT TFU spreadsheet includes an evaluation of the input design factors, balanced turn volumes, and resultant AADTs for each intersection. All factors, turns, and AADTs were determined to be valid. Ultimately, the approach volumes and factors were selected based on engineering judgment such that the AADTs and turning movements can be converted to peak hour volumes.

The data from the field-collected traffic counts were incorporated into the spreadsheet to replicate volumes as closely as possible for each intersection in the traffic estimate. The traffic estimate volumes in the 2021 Base-Year traffic estimate mimic the observed patterns as closely as possible. Once the traffic estimate volumes were determined, they were compared to historic AADT trends and interpolated model volumes for reasonableness. Table C1 found in Appendix C provides a comparison of historic AADT trends, field collected data, interpolated model volumes, and the selected traffic estimate volumes for all locations within the study area.

3.2 DESIGN FACTORS

Design factors are a very important aspect of traffic forecasting. The truck percentages, design hour factor (or K-Factor), and directional distribution are all used along with forecasted traffic volumes when designing a roadway. The methodology and chosen values for each of the factors are described below.

3.2.1 TRUCK PERCENTAGES

Truck Percentages were determined using the 14-Hour mainline classification count data and the 13-Hour TMC data, historic count data, previous traffic forecasts and the NCDOT GIS mapping. Overall truck percentages were then separated into the two NCDOT standard classifications: Duals (single-unit trucks with at least one dual-tire axle) and TTSTs (multi-unit trucks with single or twin trailers). Attempts were made to maintain consistent truck percentages along a roadway facility unless circumstances warranted a change. Data used to determine the truck percentages and the chosen values are found in Table C2 in Appendix C. A discussion of the truck percentages for the project is also included as follows:

- Along the I-26 corridor the truck percentages from the project specific count data totaled 13-15%, which is slightly higher than historic count data (9-12%) previous forecasts (11-14%) and the NCDOT GIS Data (10%). The selected truck percentages along I-26 relied more heavily on the historic data, previous forecasts and historic count data than the project specific counts. The StreetLight Data showed that volumes on the Interstate were the most affected by the COVID pandemic and it is reasonable to conclude that slightly higher percentages are due to truck traffic not being as affected (or possibly increased) due to COVID. Therefore, the full extent of the I-26 corridor was determined to have a truck percentage of 12%, with 4% Duals and 8% TTSTs.

- The truck percentages along Brevard Road NC 191 were generally consistent between all the data sets with the project specific data ranging from 5-8% which was similar to the historic count data (4-5%) previous forecasts (4-7%) and the NCDOT GIS Data (5-6%).

- The truck percentages for the Blue Ridge Parkway Access and Fredrick Law Olmstead Way collected as part of the project specific counts showed 1% Duals and 0% TTSTs. Commercial vehicles are prohibited on the Blue Ridge Parkway; however, motor homes and RVs are allowed (classified as Duals). Therefore, the selected truck percentage of 1% Duals and 0% TTSTs is reasonable.

- Truck percentages for Long Shoals Road (NC 146) west of I-26 ranged from 6-12% for the project specific counts. The truck percentages were slightly lower for historic count data (5%), previous forecasts (5-9%), and the NCDOT GIS Data (7%). The selected truck percentages of 8-10% was slightly lower than the project specific count data and slightly higher than the historic data.

- Y-lines – Most of the truck percentages collected for the Y-lines showed truck percentages that ranged from 1-15%. The truck percentages in the estimate utilizes truck percentages that are consistent with the count percentages as much as possible, although engineering judgment was used to determine the final truck percentages.

3.2.2 DIRECTIONAL DISTRIBUTION

The directional distribution (D) provides information on the direction of traffic flow in the peak period and is a percentage (rounded to the nearest 2.5 percent) based on the percent of traffic traveling in each direction along the roadway. In addition to the directional distribution percentage, the direction of the peak travel during the AM and PM peak periods are selected and included on the forecast figures. For I-26 the traffic was fairly balanced with the count data showing a range of 50.4 to 55.9 percent. Brevard Road (NC 191) showed similar trends with relatively balanced traffic volumes with distributions ranging from 50.2 to 60.7 percent with the most balanced traffic occurring at the northern end of the corridor. The D values for the y-lines varied greatly by location and land use. The D values were measured from as low as 51% (Clayton Rd between Brevard Road and Long Shoals Road) to as high as 100% (Carolina Metalworks Driveway – a low-volume access to a business). Table C3 in Appendix C provides the D value information used for this traffic estimate. A discussion of the D values for the project is also included as follows:

- The I-26 Corridor is relatively balanced with AM percentages ranging from 56% SB to 54% NB. The selected directional distribution in the AM peak includes a distribution of 52.5% SB from north of Brevard Road to the Long Shoals Road interchange and 55% NB south of the Long Shoals Road interchange. The PM peak shows a consistent SB direction with counts ranging from 51-54% with the selected distribution being 52.5% in the SB direction.

- The Brevard Road (NC 191) corridor is relatively balanced during the AM peak with selected percentages between I-26 and Long Shoals Road (NC 146) ranging from 52.5% SB to 55% NB. During the PM peak the selected percentages between I-26 and Long Shoals Rd (NC 146) range from 55% NB to 57.5% NB.

- The Long Shoals Road (NC 146) corridor has selected percentages west of I-26 that range from 52.5% WB to 55% EB in the AM peak and are 52.5% WB during the PM peak. East of I-26 the selected percentages range from 60% EB to 62.5% EB in the AM peak and are 52.5% WB during the PM peak.

- Y-lines along study area – the directional distributions for Y-lines along the study area ranged from 51 to 100 percent. Wherever possible the selected directional distributions were in line with the turning movement count percentages.

3.2.3 DESIGN HOUR FACTOR

The design hour factor (K) is the percentage of AADT that occurs during the peak time period of the day. The K-factor is meant to approximate what percentage of daily traffic would be present during the 30th highest design hour of a given year, which is commonly referred to as K30. To determine the K-value for the classification counts, the highest hourly volume was divided by the 24-Hour count. For turning movement counts the K-factor was developed by dividing the design hour of the count by the daily volume. The calculated AM Peak K-factors in this traffic estimate

range from 4% (in the case of a roadway serving a church) to 29% (for a roadway that serves Avery's Creek Elementary School). The calculated PM Peak K-factors range from 3% (for a roadway serving an industrial park) to 18% (for a driveway serving a business). The K-factor information used for this estimate is found in Table C4 in Appendix C. A discussion of the K values for the project is also included as follows:

- The K-factor from the project specific counts for the I-26 corridor range from 6.9-7.5% during the AM peak and 7.2-7.5% during the PM peak. Historic counts show K-factors ranging from 6.4-7.6% in the AM and 7.2-8.0% in the PM peak. Previous forecasts showed 7% in the AM peak and 8-9% in the PM peak. Studies have shown that COVID has had the effect of decreasing the intensity of the AM peak and spreading out the PM peak slightly. Based on the historic count data, previous forecasts and project specific count data, the selected K-factors for I-26 are 7.5% in the AM peak and 8.5% in the PM peak.

- The Brevard Road (NC 191) corridor showed K-values from the project specific counts ranging from 5.9-8.7% in the AM peak with the majority in the 6.5-7.5% range. The PM peak counts showed K-factors of 8.4-9.0% with a majority of counts in the 8.7-9.0% range. Historic counts showed AM peak K-factors of 7.5-8.6% and PM peak K-factors of 8.5-9.4%. Previous forecasts showed AM peak K-factors of 7% and PM peak K-factors of 9-10%. Based on the historic count data, previous forecasts and project specific count data, the selected K-factors for Brevard Road are 7.0% from east of I-26 through Industrial Drive/Borg Warner Drive and 7.5% to south of Long Shoals Road for the AM peak. The selected K-factors for the PM peak are 8.5% from east of I-26 through Sardis Road (NC 112) and 9.0% for the remainder of the corridor south through Long Shoals Road.

- The Long Shoals Road (NC 146) corridor showed K-values from the project specific counts ranging from 8.2-8.5% in the AM peak. The PM peak counts showed K-factors of 7.4-8.1%. Historic counts showed AM peak K-factors of 8.0-9.4% and PM peak K-factors of 7.8-9.4%. Previous forecasts showed AM peak K-factors of 8% and PM peak K-factors of 9%. Based on the historic count data, previous forecasts and project specific count data, the selected K-factors for Long Shoals Road are 8.5% for both the AM and PM peak periods.

- Select Y-lines were reviewed and adjusted based on engineering judgment and field observations.

    - Ridgefield Drive, east of Brevard Road serves land use including commercial and office space, both of which have been reduced during COVID. The project specific counts show an AM peak of 4.4%, while the selected value for the AM peak was increased to 7.5%.

    - The counts for Borg Warner Drive showed K-factors of 5.1% (AM) and 5.7% (PM) while Industrial Drive showed K-factors of 5.2% (AM) and 2.8% (PM). The land uses of these roadways are industrial in nature which has been shown to have reduced activity during COVID; therefore, the selected K-values were increased to 6-7%.

    - The counts for Park S. Boulevard showed an AM K-factor of 29.3%; however, this roadway serves all traffic to Avery's Creek Elementary School. The school re-opened in early-April 2021 following COVID and it is likely that there is a greater portion of parents dropping students off at school and less carpooling and bus riding; therefore, the K-factor was reduced to 20% for the AM peak based on engineering judgment and field observations.

- Remaining Y-lines along the corridor – at the Y-lines, all design hour factors were measured between 4-18%. The K factors selected for the estimate were largely in line with the count percentages from the counts.

3.3 TRAFFIC ESTIMATE VOLUMES

Based on the methodology described in Section 3.1, traffic estimates for the 2021 Base Year No-Build Scenario were calculated. Adjusted counts were compared to trend line analyses and the extrapolation of data to 2021 during the process. Utilizing a variation of the NCDOT Traffic Forecast Utility spreadsheet, bidirectional turning movements were

also estimated at intersections to replicate observed daily turning movement volumes as closely as possible. Comparisons of trend line analyses, volume extrapolation, observed counts, and selected estimate volumes are shown in Table C1 in Appendix C. A discussion of the traffic estimate volumes is included as follows:

- The AADT on I-26 was developed based on considering the 2019 AADT count, historic count data, previous forecast volumes and the project specific count data (both standard and normalized for COVID) and range from 85,700 south of the Long Shoals Rd (NC 146) interchange to 89,000 north of the Brevard Rd (NC 191) interchange. These volumes align reasonably with all the data sets and produce 2021 volumes that are largely in line with pre-COVID data.

- The AADT on Brevard Road (NC 191) was developed based on all the available data and range from 20,600 to 30,700 on the multilane portion between I-26 and the Blue Ridge Parkway and with volumes ranging from 13,000 to 18,900 on the existing two-lane roadway between the Blue Ridge Parkway access and Long Shoals Road (NC 146). These volumes largely align with the available data and produce 2021 volumes that are largely in line with pre-COVID data.

- The AADT for the Biltmore Outlet Driveway was reviewed based on the project specific counts and the 2018 volume from the I-4700 traffic forecast. Retail locations have reduced traffic due to the COVID pandemic and it is likely that some the shift in how people shop may remain after the pandemic; therefore, the selected AADT was selected to be closer to the I-4700 forecast volume.

- The AADT for Ridgefield Drive was reviewed based on the project specific counts, historic counts and previous forecasts. Ridgefield Drive largely serves retail locations and office space, both of which have experienced decreases in traffic volumes during COVID; therefore, the selected AADT of 10,000 is closer to the historic count data and previous forecast volumes than the project specific data.

- Borg Warner Drive, Industrial Drive and Park S. Drive all provide access to industrial land uses that have been shown to have reduced demand during the COVID pandemic; therefore, engineering judgment was utilized and the selected AADT volumes are slightly higher than project specific count data.

- The project specific count data for the Blue Ridge Parkway Access and Fredrick Law Olmstead Way (that accesses the NC Arboretum) show traffic volumes that are notably higher than previous forecasts and the AADT volume on the Blue Ridge Parkway (2,100-3,000 in 2019). It is assumed that the demand may be higher than normal due to the relaxing of restrictions on outdoor activities and the likelihood that attendance increases during the spring when plants in the arboretum are beginning to bloom. Based on this and engineering judgment the selected AADT volumes were reduced slightly to account for the likely higher than normal demand.

- The AADT on Long Shoals Road (NC 146) was developed based on all the available data and range from 12,000 to 38,200 and fit well in comparison with the historic count data and previous forecast. These volumes largely align with the available data and produce 2021 volumes that are largely in line with pre-COVID trend data.

4. MODEL DATA

A revised version of the French Broad River MPO Travel Demand Model (2015/2045 FBRMPO TDM v1.1, issued 4/28/21), provided by NCDOT, was utilized as a tool in the development of the forecast.

The study area for the forecast is included the French Broad River MPO Travel Demand Model (FBRTDM). The FBRTDM was developed in TransCAD (version 8 Build 22360) and was calibrated based on a base year of 2015 and has a future year of 2045 with no intermediate years.

Table 4-1 presents a comparison of the future population totals, for Buncombe County, found within the FBRTDM and from the North Carolina Office of State Budget and Management population projections. A direct future year comparison is not possible, but the OSBM and FBRTDM predict similar compound annual growth rates.

Table 4-1: Population Projection Comparison

	Total Population			CAGR (%)
	2015	2038	2045	
OSBM - Buncombe County	254,496	324,573	--	1.1%
FBRTDM - Buncombe County	254,596	--	384,009	1.4%

Source: website https://www.osbm.nc.gov/ on 05/27/2021

The study area is located in the central area of the model and has good connectivity, with the model including all of the major roadways (I-26, Brevard Road (NC 191), and Long Shoals Road (NC 146)), and several of the minor y-line roadways.

However, the model travel analysis zones (TAZs) in the study area are large and often feature single centroid connections to the model network. To improve the model results in the vicinity of the study area, a number of revisions were made to the TAZ structure and centroid loading:

- One of the primary locations of proposed economic development is within TAZ 243, which is primarily home to the Biltmore Estate. The centroid loading for this TAZ is only onto US 25, north of I-40. The southwest region of the TAZ, where the proposed economic development is (and where the existing Pratt & Whitney plant is) is west of I-26 and cannot access the original loading point. Therefore, the TAZ was split at the I-26 alignment to create a new TAZ (TAZ 652) which could then have centroid connections added to Brevard Road (NC 191) (and to the proposed new I-26 interchange as part of the Build scenarios). This allows for better local vehicle loading with direct connection to study roadways.
- TAZ 406, to the west of Brevard Road (NC 191) and north of Sardis Road, originally only loaded onto Sardis Road. Because of the amount of economic activity on Brevard Road (NC 191), a centroid connection was added to connect to Brevard Road (NC 191) and the centroid itself was moved to direct the majority of vehicle loading onto Brevard Road (NC 191) while still maintaining some loading onto Sardis Road.
- The centroid was also moved for TAZ 367. This TAZ is located west of Brevard Road (NC 191) and south of Sardis Road and has existing centroid connections to both Brevard Road (NC 191) and Sardis Road. The centroid was moved closer to Brevard Road (NC 191) to direct the majority of vehicle loading onto Brevard Road (NC 191) while still maintaining some loading onto Sardis Road.
- TAZ 241, to the east of Brevard Road (NC 191) and to the west of I-26 (and south of the Brevard Road (NC 191) interchange at I-26), originally only loaded at one location onto Brevard Road (NC 191) well south of the area of largest economic activity. To more properly reflect the vehicular activity on Brevard Road (NC 191), two centroid connections were added to Brevard Road (NC 191). The centroid was also relocated to allow for better vehicle loading.
- TAZ 236, to the west of Brevard Road (NC 191) and to the east and south of Blue Ridge Parkway, is a large TAZ with a single loading point onto NC 191 between Long Shoals Road (NC 146) and Avery Creek Road. Two

centroid connections were added onto Brevard Road (NC 191) between Long Shoals Road (NC 146) and Clayton Road to facilitate vehicle loading along Brevard Road (NC 191).

A more detailed explanation of the changes made to the FBRMPO can be found in Appendix D.

Table C5 can be found in Appendix C and displays the model performance for the 2015 model against 2015 AADTs, the 2045 model volumes, and an extrapolated volume for 2021 based on the 2015 and 2045 model output. In general, the model volumes are lower than the observed AADTs in the study area. A discussion of the model performance for the project study area corridors is included below:

- Brevard Road (NC 191) study corridor – the 2015 model volumes are consistently lower than the corresponding AADTs along the study corridor. The 2015 model highway assignment is lower than the observed AADT by 3,000 to 12,000 vehicles per day (vpd). The magnitude of the difference fluctuates along the length of the corridor.
- I-26 study – North of Brevard Road (NC 191), the 2015 model volumes are very close to the corresponding AADT (only about 300 vpd less than the AADT). South of Brevard Road (NC 191), however, the 2015 model volumes are lower than the corresponding AADT by about 9,000-13,000 vpd.
- Long Shoals Road (NC 146) – West of I-26, the 2015 model volumes are lower than the corresponding AADTs by about 3,000 to 10,000 vpd. East of I-26, the 2015 model volume is lower than the AADT by about 8,000-12,000 vpd.
- Y-lines – the only y-line with an AADT value is Sardis Road (NC 112). The 2015 model volume is around 8,000 vpd lower than the AADT.

5. BASE YEAR 2021 BUILD TRAFFIC FORECASTS

5.1 ASSUMPTIONS

The 2021 Build traffic forecast utilizes the existing roadway network from the 2021 No-Build traffic estimate along with the addition of the completed construction of the Pratt & Whitney manufacturing site and the proposed project (HE-0001).

The FBRMPO Travel Demand Model (FBRMPO TDM) network was revised to reflect the base year Build scenario, including the addition of an additional Traffic Analysis Zone (TAZ) for the proposed project that generated the same number of trips that were included in the *Biltmore Park West Development Traffic Impact Analysis* (VHB Engineering NC, PC, March 2021) that is projected to be completed in late-2021. A new interchange on I-26 was coded into the model and a new 35-mph connector roadway was added from the proposed interchange to Brevard Road (NC 191).

5.2 METHODOLOGY

The FBRMPO TDM, StreetLight Data origin-destination data and engineering judgment were heavily relied upon in the calculation of the 2021 Base Year Build traffic volumes. Once the travel demand model was run to include the changes listed above, model volumes were extracted for each location included in the evaluation. Model volumes from the 2021 No-Build and the Build were compared in order to calculate a diversion percentage between the two scenarios. These diversion percentages were then reviewed for reasonableness. The FBRMPO TDM has several very large TAZs and the centroid connector locations make it difficult to accurately model the variations in travel patterns from the proposed project. Therefore, a more detailed review of travel patterns was conducted utilizing O-D data from StreetLight Data to determine the percentage of trips for select O-D pairs that would likely choose the proposed interchange as an alternative route. Based on the StreetLight Data and engineering judgment the trips were manually re-routed trips. The re-routing of trips is described in greater detail in Section 5.4 and Appendix E.

5.3 DESIGN FACTORS

All the design factors used for the 2021 No-Build estimate were deemed adequate for the 2021 Build scenario. The Build scenario includes three new roadway segments that require design factors.

The design factors for the Pratt & Whitney Access were selected based on a review of the data included in the TIA and engineering judgment. The TIA included K-values of 19% with D-values ranging from 57% to 72%. Because the manufacturing facility will include three shifts, the D-values appeared to be reasonable and were chosen to be 70% into the facility in the AM peak and 60% out of the facility in the PM peak. The K-values for both the AM and PM peaks were selected to be 14% in each peak. These factors are higher than nearly all other locations included in the forecast; however, they are lower than the percentages included in the TIA. The selection of 14% seems reasonable as the trips will be more concentrated due to shift work having less flexibility in scheduling, but also occurring partially outside the overall peak periods for the network.

The design factors for the NC 191 Connector roadway segments between the proposed interchange and Brevard Road (NC 191) were selected based on the roadways they serve and the trips they divert using engineering judgment. The K-values for the AM peak range from 7% to 8% while the PM peak has a selected K-value of 9%. The selected K-values are comparable to the NC 191 and I-26 corridors. The D-values for the new Connector roadway are nearly balanced with a 52.5% D-value west of the Pratt & Whitney Access which is reasonable based on the 52.5%-55% factors along I-26 and NC 191. The D-value for the segment between the Pratt & Whitney Access and I-26 is more directional to account for the higher percentage of traffic entering the Pratt & Whitney site. The D-value for the segment was determined to be 65% WB in the AM peak and 55 EB in the PM peak.

The truck percentages for the new roadway were based on engineering judgment and discussions with the Pratt & Whitney developers that stated that the site was not anticipated to generate substantial amounts of truck traffic. Therefore, the Pratt & Whitney site was estimated as having 3% duals and 1% TTSTs while the NC 191 Connector was estimates at 4% duals and 1% TTSTs which aligns with percentages along Brevard Road (NC 191).

5.4 TRAFFIC FORECAST VOLUMES

Based on the methodology described in Section 5.2, traffic volumes for the 2021 Base Year Build scenario were calculated. Table C6 in Appendix C show the comparisons of model output, diversion percentages, volume deltas, and selected volumes for the 2021 Base Year Build scenario. A summary of the trip diversion for the 2021 Build scenario are included in Appendix E.

A brief summary of the key observations and considerations from the development of the 2021 Build volumes are as follows:

- Based on the available data it was clear that the FBRMPO TDM would provide a solid basis for overall traffic patterns in the area and general ideas of where traffic was expected to divert the most; however, the growth rates at the link-by-link level would not be reliable. Therefore, the development of the 2021 Base Year Build forecast was developed based on the following travel patterns derived from StreetLight Data and overall traffic volumes in the study area:
    - The 2021 Build volumes were based on estimating the likely changes due to the proposed projects and diverting the trips throughout the network to arrive at the final 2021 Build forecast. The following steps (graphics included in Appendix E) were included in the development of the 2021 Build volumes:
    - Step 1: The volumes to and from the proposed Pratt & Whitney manufacturing site were distributed throughout the network. The 4,000 daily trips were distributed with 70% to the north and 30% to the south based on the assumed traffic distribution from the site's TIA document. The allocation of the trips was then determined based on engineering judgment considering the land uses and overall volume of each external link in the forecast.
    - Step 2: The volumes to and from I-26 north of the Brevard Road (NC 191) interchange were reviewed and trips to and from select destinations were diverted based on percentages of the overall traffic derived from the StreetLight Data O-D data. A total of 1,500 trips were diverted to the new facility.
    - Step 3: The volumes to and from Brevard Road (NC 191) east of the I-26 interchange were reviewed and trips to and from select destinations were diverted based on percentages of the overall traffic derived from the StreetLight Data O-D data. A total of 1,100 trips were diverted to the new facility.
    - Step 4: The volumes to and from Schenck Parkway were reviewed and trips to and from select destinations were diverted based on percentages of the overall traffic derived from the StreetLight Data O-D data. A total of 400 trips were diverted to the new facility.
    - Step 5: The volumes to and from Long Shoals Rd (NC 146) east of the I-26 interchange were reviewed and trips to and from select destinations were diverted based on percentages of the overall traffic derived from the StreetLight Data O-D data. A total of 1,300 trips were diverted to the new facility.
    - Step 6: The volumes to and from I-26 south of the Long Shoals Road (NC 146) interchange were reviewed and trips to and from select destinations were diverted based on percentages of the overall traffic derived from the StreetLight Data O-D data. A total of 1,500 trips were diverted to the new facility.

The following table provides as summary of the diversion for both segments of the NC 191 Connector:

2021 Build – Diversion Summary

Roadway Segment	Step 1	Step 2	Step 3	Step 4	Step 5	Step 6	Total
NC 191 Connector, Brevard Road to Pratt & Whitney Access	2900	1500	1100	400	1300	1900	**9100**
NC 191 Connector, Pratt & Whitney Access to I-26	1100	1500	1100	400	1300	1900	**7300**

6. FUTURE YEAR 2045 NO-BUILD TRAFFIC FORECAST

6.1 ASSUMPTIONS

A Future Year of 2045 was chosen for HE-0001 traffic volume examination as it is the latest year available in the FBRMPO Travel Demand Model (FBRMPO TDM) and to correspond with the horizon year of the 2045 MTP. All 2045 fiscally-constrained projects, with the exception of HE-0001, listed in *The French Broad River MPO Metropolitan Transportation Plan 2045* (2045 MTP) were included in the 2045 No-Build alternative model run.

Previous forecasts within the study area have included a new access to Biltmore Estate, known as the "West Gate" in the forecast. Based on correspondence with local planners, they are not aware of Biltmore Estate pursuing this option at this time. A previously developed Traffic Impact Analysis for the West Gate was prepared in November 2010; however, it was never approved, and no current plans are in place to pursue its construction. Therefore, it is assumed that there will be no change in access to and from the Biltmore Estate and that a West Gate will not be constructed prior to 2045.

The FBRMPO TDM did not include the proposed project until January 2022. The socioeconomic data included in the FBRMPO TDM does not appear to include the proposed development for the area west of I-26 and east of the French Broad River and north of the Blue Ridge Parkway. Additionally, the socioeconomic data appears to underestimate the magnitude of development for Biltmore Farm and the proposed Biltmore Farm West development on the west side of I-26, south of the Blue Ridge Parkway. Based on the differences between the assumptions in the 2045 MTP and FBRMPO TDM the following additional assumptions were made:

- The study area includes several very large Traffic Analysis Zones (TAZs) that load traffic through a single centroid connector onto the roadway network. The large TAZs make it more difficult to accurately represent the traffic volumes on individual links within the study area.
- A single TAZ includes both the Biltmore Estate and the location of the Pratt & Whitney (P&W) manufacturing facility. All traffic from this TAZ currently loads onto US 25 at the entrance to Biltmore. Due to this, the TAZ was split into two separate TAZs with one loading onto US 25 for Biltmore and a second TAZ west of I-26 that includes the P&W facility and future development of Biltmore Park West loading onto NC 191. While the precise development plan is not yet known for this location, based on conversations with the developer and local planners the following general land uses are assumed:
  - Industrial: 1.7 million square feet
  - Residential: 300 dwelling units
  - Retail/Office/Institutional: 180,000 square feet
  - Lodging: 120 rooms
  - **Total Trip Generation: 13,500-14,500**
- A second TAZ includes the Biltmore Park area and the area west of I-26 and south of the Blue Ridge Parkway that has access under I-26. The 2045 socioeconomic data includes this TAZ as having an increase of about 1,250 housing units and about 2,600 jobs between 2015 and 2045. Based on conversations with the developer and local planners the expected development is focused a little more on residential with the following general land uses being assumed for the future development of the entire TAZ (Biltmore Park, Biltmore Park West and The Ramble Biltmore Forest):
  - Industrial: 400,000 square feet
  - Residential: 2,500 dwelling units
  - Retail/Office/Institutional: 70,000 square feet
  - Lodging: 120 rooms
  - **Total Trip Generation: 21,500-23,000**

6.2 METHODOLOGY

The FBRMPO TDM was utilized as a tool in the development of the 2045 Future Year No-Build traffic volumes.

2045 Future Year No-Build model runs were completed without the proposed project in place. The Compound Annual Growth Rate (CAGR) for each traffic volume location was calculated using the following equation:

((2045 Model Value/2015 Model Value) ^1/30) -1

Additionally, the raw model volumes were compared to determine the total change in model volume between 2021 (interpolated) and 2045. The CAGR rates and total volume changes were reviewed and adjusted during this phase using engineering judgment where needed. The selected CAGR rates were then determined and applied to the 2021 No-Build traffic volumes and extrapolated to determine the 2045 traffic volumes.

6.3 DESIGN FACTORS

The design factors used for the 2021 No-Build estimate and the 2021 Build scenario were reviewed. Based on the review the only segments that would likely change between 2021 and 2045 are for the roadways associated with Biltmore Park West and the Pratt & Whitney manufacturing facility and ancillary development. The 2045 Future Year No-Build includes the development of the Biltmore Park West development north of the Blue Ridge Parkway. Based on discussions with the developers and local planners the proposed land uses will result in the following sets of design factors:

- The Pratt & Whitney Access segment which includes the manufacturing facility and 500,000 square feet of additional industrial development and roughly 100 dwelling units resulting in selected k-values of 12%in both the AM and PM peaks due to large amount of shift-based employment. The D-values include 70% into the site during the AM peak and 60% out of the site during the PM peak based on the industrial land uses. The selected truck percentages are 3% duals and 1% TTSTs.

- The Biltmore Park West Access that serves the remainder of the parcel includes a mix of retail, office and residential land uses. The review of the proposed land uses resulted in selected K-values of 9% in both the AM and PM peaks. The D-values include 60% into the site during the AM peak and 60% out of the site during the PM peak based on the mix of land uses. The selected truck percentages are 2% duals and 1% TTSTs.

- The design factors for the segment between the two links described above and Brevard Road (NC 191) is a blend of the above factors to produce balanced peak hour volumes. The review of the proposed land uses resulted in selected K-values of 10% in both the AM and PM peaks. The D-values include 65% into the site during the AM peak and 60% out of the site during the PM peak based on the mix of land uses. The selected truck percentages are 3% duals and 1% TTSTs.

6.4 TRAFFIC FORECAST VOLUMES

Based on the methodology described in Section 6.2, traffic volumes for the 2045 Future Year No-Build Scenario were calculated for both Scenario 1 and Scenario 2. Table C7 in Appendix C show the comparisons of historic growth rates, model output, CAGRs, and selected volumes. Some of the volumes were modified slightly to allow for the development of a balanced network.

A brief summary of the key observations and considerations from the development of the 2045 No-Build volumes are as follows:

- As noted in Section 4 the FBRMPO TDM produces volumes that are substantially lower than the corresponding AADT data; therefore, it was more challenging to determine the future year growth rates. Based on the model volumes being lower, both the CAGR and raw model volume delta were considered in determining the future

year volumes. Also, the locations of centroid connectors appear to be affecting volumes along the corridors; therefore, the selected growth rates are based primarily on consideration of the growth rate along longer stretches of the corridor.

- A growth rate of 1.17%-1.18% per year was chosen for the I-26 corridor and are slightly lower than the model CAGR but produce volumes that are slightly higher than the raw increase in model volume from the model.
- A growth rate of 1.49%-1.84% per year was chosen along the Brevard Road (NC 191) corridor and generally corresponds with the average growth rate along the corridor with consideration to the raw increase in model volumes.
- A growth rate of 1.25%-1.77% per year was chosen along the Long Shoals Road (NC 146) corridor and generally corresponds with the average growth rate along the corridor.
- The proposed Biltmore Park West development includes 13,800 daily trips.

7. FUTURE YEAR 2045 BUILD TRAFFIC FORECASTS

7.1 ASSUMPTIONS

The 2045 Build traffic forecasts contain all of the assumptions found in the 2045 No-Build traffic volume network discussed in Section 6.1 along with the addition of the proposed interchange on I-26 and a connection to the NC 191 Connector roadway.

7.2 METHODOLOGY

The French Broad River MPO Travel Demand Model (FBRMPO TDM), StreetLight Data, Inc. origin-destination data and engineering judgment were heavily relied upon in the calculation of the 2045 Future Year Build traffic volumes. Once the travel demand model was run to include the proposed project (HE-0001), model volumes were extracted for each location included in the evaluation. Model volumes from the 2045 No-Build and the Build Scenario were compared in order to calculate a diversion percentage between the two scenarios. These diversion percentages were then reviewed for reasonableness. The FBRMPO TDM has several very large TAZs and the centroid connector locations make it difficult to accurately model the variations in travel patterns from the proposed project. Therefore, a more detailed review of travel patterns was conducted utilizing O-D data from StreetLight Data to determine the percentage of trips for select O-D pairs that would likely choose the proposed interchange as an alternative route. Based on the StreetLight Data and engineering judgment the trips were manually re-routed trips.

7.3 DESIGN FACTORS

The 2045 model network was reviewed to see if any of the corridors experienced changes in the percent of traffic occurring in the peak hour, direction of peak travel, or directional split when compared to the 2045 No-Build model runs. The selection of design factors for the 2045 Build scenario was similar to the evaluations discussed for the 2045 No-Build, with nearly all the selected values being the same as those selected for the 2045 No-Build scenario discussed in Section 6.3.

All of the design factors used for the 2045 No-Build forecast were deemed adequate for the 2045 Build Alternative with the exception of the NC 191 Connector roadway between the new interchange and Brevard Road (NC 191). The traffic patterns on this roadway will be modified under the build scenario due to the additional connectivity to I-26. Based on a review of the diverted trips and trips from the Biltmore Park West/Pratt& Whitney access points, the design factors were revised to better replicate the anticipated use of the roadway. The review of the proposed changes on travel patterns resulted in selected K-values of 8% in the AM peak and 9% in the PM peak. The D-values include 60% into the site during the AM peak and 55-60% out of the site during the PM peak based on the mix of land uses and traffic diverting through the network. The selected truck percentages are 4% duals and 1% TTSTs which blends the lower percentages within the development with the higher percentages on I-26 and Brevard Road.

7.4 TRAFFIC FORECAST VOLUMES

Based on the methodology described in Section 7.2, traffic volumes for the 2045 Future Year Build scenario were calculated. Table C8 in Appendix C shows the comparisons of model output, diversion percentages, volume deltas, and selected volumes for the 2045 Future Year Build scenario. A summary of the trip diversion for the 2045 Build scenario are included in Appendix E.

A brief summary of the key observations and considerations from the development of the 2045 Build volumes are as follows:

- Based on the available data it was clear that the FBRMPO TDM would provide a solid basis for overall traffic patterns in the area and general ideas of where traffic was expected to divert the most; however, the growth rates at the link-by-link level would not be reliable. Therefore, the development of the 2045 Future Year Build forecast was developed based on the following travel patterns derived from StreetLight Data and overall traffic volumes in the study area:

- The 2045 Build volumes were based on estimating the likely changes due to the proposed projects and diverting the trips from the 2045 No-Build Scenario 2 forecast throughout the network to arrive at the final 2045 Build forecast. The following steps (graphics included in Appendix E) were included in the development of the 2045 Build volumes:

- Step 1: The volumes to and from the proposed Biltmore Park West and Pratt & Whitney manufacturing site were distributed throughout the network. The 13,800 daily trips were distributed based on which trip patterns would be re-routed due to the construction of the interchange. The allocation of the trips was then determined based on engineering judgment considering the likely travel times and overall volume of each external link in the forecast. A total of 9,800 trips were diverted.

- Step 2: The volumes to and from I-26 north of the Brevard Road (NC 191) interchange were reviewed and trips to and from select destinations were diverted based on percentages of the overall traffic derived from the StreetLight Data O-D data. A total of 1,800 trips were diverted to the new facility.

- Step 3: The volumes to and from Brevard Road (NC 191) east of the I-26 interchange were reviewed and trips to and from select destinations were diverted based on percentages of the overall traffic derived from the StreetLight Data O-D data. A total of 1,500 trips were diverted to the new facility.

- Step 4: The volumes to and from Schenck Parkway were reviewed and trips to and from select destinations were diverted based on percentages of the overall traffic derived from the StreetLight Data O-D data. A total of 800 trips were diverted to the new facility.

- Step 5: The volumes to and from Long Shoals Rd (NC 146) east of the I-26 interchange were reviewed and trips to and from select destinations were diverted based on percentages of the overall traffic derived from the StreetLight Data O-D data. A total of 1,900 trips were diverted to the new facility.

- Step 6: The volumes to and from I-26 south of the Long Shoals Road (NC 146) interchange were reviewed and trips to and from select destinations were diverted based on percentages of the overall traffic derived from the StreetLight Data O-D data. A total of 2,600 trips were diverted to the new facility.

- Step 7: The model data shows an increase in traffic volume along I-26. It is likely that the improved connectivity slightly changes travel patterns, and the improved connectivity draws additional trips along I-26 into the study area that would not occur without the project being constructed. A total of 800 additional trips were added to the forecast.

The following table provides as summary of the diversion for both segments of the NC 191 Connector:

2045 Build – Diversion Summary

Roadway Segment	2045 No-Build Volume	Step 1	Step 2	Step 3	Step 4	Step 5	Step 6	Step 7	Total
NC 191 Connector, Brevard Road to Pratt & Whitney Access	13800	-9800	1800	1500	800	1900	2600	0	**12,600**
NC 191 Connector, Pratt & Whitney Access to I-26	0	9800	1800	1500	800	1900	2600	200	**18,600**

APPENDIX A:

HISTORIC AADT COUNT DATA

Table A1: NCDOT Historic AADT

Location	2019	2018	2017	2016	2015	2014	2013	2012	2011	2010
I-26 - North of Brevard Rd (NC 191)	89,000	80,500	84,000	*75,000*	81,000	*86,000*	80,000	79,000	78,000	80,000
I-26 - South of Brevard Rd (NC 191)	86,000	79,500	85,000	*75,000*	78,000	82,000	78,000	76,000	75,000	74,000
I-26 - North of Long Shoals Rd (NC 146)	86,000	79,500	85,000	*75,000*	78,000	82,000	78,000	76,000	75,000	74,000
I-26 - South of Long Shoals Rd (NC 146)	80,000	75,000	*82,000*	72,000	72,000	75,000	72,000	72,000	72,000	69,000
Brevard Rd (NC 191) - East of I-26				16,000		13,000		12,000		
Brevard Rd (NC 191) - West of Wedgefield Rd				27,000		22,000		23,000		28,000
Brevard Rd (NC 191) - South of Ridgefield Blvd/Sardis Rd (NC 112)		20,000		20,000		19,000		18,000		19,000
Brevard Rd (NC 191) - North of Bent Creek Ranch Road (SR 3484)		19,000		15,000		14,000		12,000		16,000
Brevard Rd (NC 191) - North of Clayton Rd (SR 3501)		16,500		15,000		13,000		12,000		12,000
Brevard Rd (NC 191) - South of Park S Blvd (SR 3642)/Commerce Way		12,000		12,000		11,000		10,000		
Brevard Rd (NC 191) - South of Long Shoals Rd (NC 146)/Vista Blvd (SR 3645)		12,000		12,000		11,000		11,000		10,000
Sardis Road (NC 112) - West of Brevard Rd (NC 191)		13,000		14,000		12,000		12,000		14,000
Pole Creasman Road (SR 3479) - West of Brevard Rd (NC 191)				1,000		970		880		910
Clayton Road (SR 3501) - North of Long Shoals Road (NC 146)						5,900		4,700		*3,200*
Long Shoals Rd (NC 146) - East of Brevard Rd (NC 191)		9,100		9,400		8,700		8,400		*7,000*
Long Shoals Road (NC 146) - East of Ledbetter Rd (SR 3498)		22,000		22,000		19,000		*16,000*		
Long Shoals Rd (NC 146) - East of I-26				37,000		34,000		30,000		
Long Shoals Road (NC 146) - East of Schenck Pkwy/Skyland Inn Dr		32,000		32,000		30,000		27,000		25,000
Ledbetter Rd (SR 3498) - South of Long Shoals Road (NC 146)				4,700		4,000		3,700		3,600

Table A1: NCDOT Historic AADT

Location	2009	2008	2007	2006	2005	2004	2003	2002	2001	2000
I-26 - North of Brevard Rd (NC 191)	76,000	74,000	74,000	72,000	72,000	69,000	70,000	67,000	66,000	67,000
I-26 - South of Brevard Rd (NC 191)	71,000	70,000	71,000	68,000	68,000	67,000	67,000	62,000	63,000	64,000
I-26 - North of Long Shoals Rd (NC 146)	71,000	70,000	71,000	68,000	68,000	67,000	67,000	62,000	63,000	64,000
I-26 - South of Long Shoals Rd (NC 146)	66,000	67,000	69,000	66,000	63,000	64,000	64,000	59,000	60,000	60,000
Brevard Rd (NC 191) - East of I-26		12,000		12,000		9,900		12,000		10,000
Brevard Rd (NC 191) - West of Wedgefield Rd		26,000		27,000		22,000		23,000		24,000
Brevard Rd (NC 191) - South of Ridgefield Blvd/Sardis Rd (NC 112)		19,000		*21,000*				16,000		15,000
Brevard Rd (NC 191) - North of Bent Creek Ranch Road (SR 3484)		13,000		15,000		12,000		10,000		10,000
Brevard Rd (NC 191) - North of Clayton Rd (SR 3501)		13,000		13,000		10,000		10,000		10,000
Brevard Rd (NC 191) - South of Park S Blvd (SR 3642)/Commerce Way		11,000		11,000		9,200		8,900		8,200
Brevard Rd (NC 191) - South of Long Shoals Rd (NC 146)/Vista Blvd (SR 3645)		11,000		*12,000*		10,000		9,900		10,000
Sardis Road (NC 112) - West of Brevard Rd (NC 191)		15,000		*17,000*		12,000		11,000		11,000
Pole Creasman Road (SR 3479) - West of Brevard Rd (NC 191)		990		990		1,000		1,000		1,100
Clayton Road (SR 3501) - North of Long Shoals Road (NC 146)		4,900		4,700		3,700		3,400		3,200
Long Shoals Rd (NC 146) - East of Brevard Rd (NC 191)		8,100		7,700		8,000		7,100		6,000
Long Shoals Road (NC 146) - East of Ledbetter Rd (SR 3498)				15,000		14,000		12,000		12,000
Long Shoals Rd (NC 146) - East of I-26						22,000		15,000		
Long Shoals Road (NC 146) - East of Schenck Pkwy/Skyland Inn Dr		24,000				19,000				
Ledbetter Rd (SR 3498) - South of Long Shoals Road (NC 146)		3,200		2,700		2,100		1,400		1,300

Note: *Red Italics* denote numbers removed from data set due to being greater than two standard deviations away from the trend line data.

APPENDIX B:

PROJECT CORRESPONDENCE

Study Area Questionnaire Sent to Local Planners

Patriot Transportation Engineering is currently in the process of developing a traffic forecast for NCDOT STIP Project No. HE-0001, which would add an interchange to I-26 (proposed Exit 35) in Buncombe County. The forecast study area is shown in the following figure (with the approximate location of the proposed interchange marked with the star below):

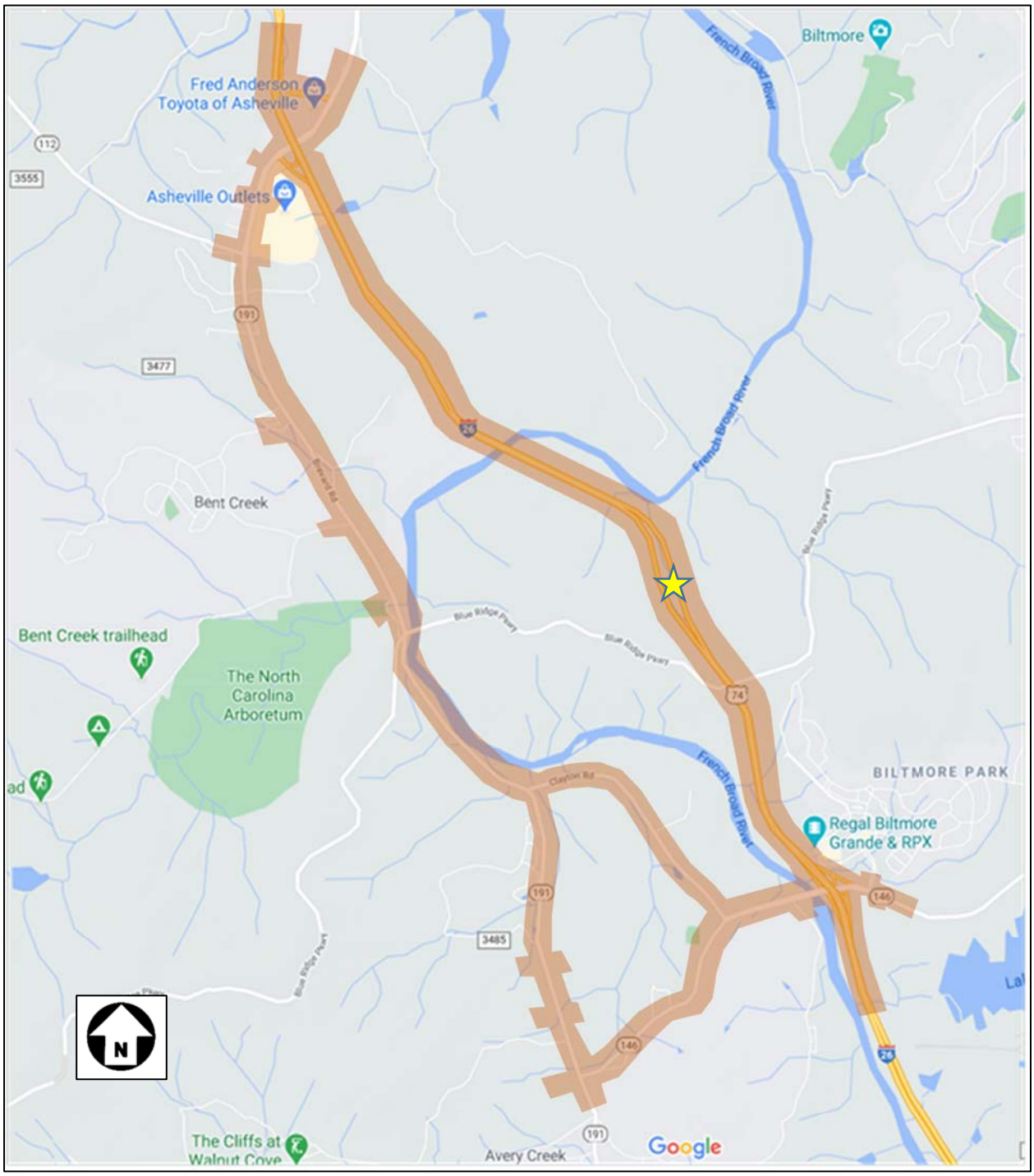

Study Area Questionnaire Sent to Local Planners

We have reviewed the French Broad River Metropolitan Planning Organization (FBRMPO) *Metropolitan Transportation Plan 2045* (2045 MTP), and are seeking input from local planners and engineers who are familiar with the area. We have identified you as a local representative. I have listed a few questions below that will help us in the development of the traffic forecast. We would greatly appreciate your time in answering these questions. You may answer the questions in text format below and return them to me at: lee@pt-engineering.net.

If you would rather discuss the questions over the phone, I will be following up with a phone call early next week. Thank you in advance for your time and please let me know if you have any questions.

1) Current and historical traffic trends indicate that the traffic growth over the last 20 years along I-26 in the study area has generally increased overall, although traffic levels appeared to remain mostly stable from 2011 through 2015. Thus, the 10-year growth rates across the study roadway (which include the slower growth) are lower than the 20-year growth rates. The 20-year growth rates on I-26 range from 1.3% to 1.6% per year (and average 1.4%), and the 10-year growth rates range from 0.5% to 1.3% per year (and average 0.8%).

   Current and historical traffic trends on NC 191 (Brevard Rd) show a general increase of traffic, although traffic levels appeared to decline around the year 2007 and from there either remained relatively stable or slowly increased from the 2007 levels. Thus, the 20-year growth rates across NC 191 (which include the traffic decrease) are lower than the more recent 10-year growth rates (which generally feature stable volumes or recovery from the 2007 decrease). The 20-year growth rates on NC 191 range from 0.4% to 2.8% per year (and average 1.8%), and the 10-year growth rates range from -0.8% to 7.6% per year (and average 3.0%). Of note, the 10-year growth rate on NC 191 northeast of I-26 (7.6%), which was widened in 2010, is noticeably higher than the rest of the corridor. Without that portion of NC 191, the corridor's average 10-year growth rate is 2.2%.

   The historic volumes on NC 146 (Long Shoals Rd) in the study area show steady growth throughout the last 20 years. The 20-year growth rates range from 3.7% to 5.8% per year (and average 4.58%), and the 10-year growth rates range from 3.3% to 5.4% per year (and average 4.1%).

   The growth rates on the other roads connecting to the study corridor generally show similar historic trends in accordance with their geographic location within the study area. That is, the roads connecting to NC 191 show slow but steady growth, while the roads connecting to NC 146 show more robust growth rates. The roads connecting to NC 191 have an average 20-year growth rate of 0.9% per year and an average 10-year growth rate of 0.0% per year. For the roads connecting to NC 146, the average growth rates are 6.3% (20 year) and 8.3% (10 year).
   a. Do you agree with the growth patterns described?

   b. What growth patterns have you noticed?

   c. Would you expect the growth rate to change substantially in the next 20 years?

   d. Do you expect the growth rate to increase in the future? If so, by what percent per year?

2) The traffic forecast will include developing volumes for the average traffic situation. Aside from school being in session and the summer tourist season, are there any noticeable seasonal differences in traffic? Are there specific variations in seasonal visitor traffic to be aware of?

Study Area Questionnaire Sent to Local Planners

3) According to the North Carolina Office of State Budget and Management (OSBM) the population of Buncombe County was approximately 262,659 in 2019 and is projected to grow by 0.68% per year to around 313,400 in 2045. The population projections for the French Broad River MPO area that are contained within the 2045 MTP show a growth rate of 1.19% per year, with population projected to grow from 247,000 in 2015 to 353,000 in 2045.
    a. Do you think that the 0.68% to 1.19% population growth rate is reasonable for the project study area or do you think it will be higher or lower?

    b. Do you know of any other population projections for this area that may be helpful as we review the growth in the area?

4) The latest version of the FBRMPO Travel Demand Model shows that between 2015 and 2045, I-26 has a growth rate of roughly 1.7% per year. NC 191 shows a growth rate of approximately 1.0% per year south of the I-26 interchange and 3.2% per year north of the interchange. NC 146 shows a growth rate of approximately 1.9% per year. For the roads connecting to NC 191 and NC 146, the model shows growth rates of around 1.9% per year.
    a. Do you think that these traffic growth rates are reasonable for the project study area or do you think they will be higher or lower?

5) The 2045 MTP includes the following projects in the vicinity of the forecast.
    - MTP ID HS4502 (STIP I-4700) – I-26 Widening from NC 280 to I-40
    - MTP ID HR4514 (STIP I-4400) – I-26 Widening from US 25 to NC 280
    - MTP ID HS4506 (STIP I-2513C) – I-26/I-40/I-240 interchange improvement
    - MTP ID HR4501 (STIP I-2513A) – I-26/I-240 Widening from I-40 to Haywood Rd
    - MTP ID HR4505 (STIP I-2513B) – I-26 Connector from Haywood Rd to Broadway
    - MTP ID HR4507 (STIP U-3403B) – NC 191 Widening from Ledbetter Rd to North of Blue Ridge Parkway
    - MTP ID HR4515 (STIP U-3403A) – NC 191 Widening from NC 146 to NC 280
    - MTP ID HD134510 (STIP U-6047) - NC 112 (Sand Hill/Sardis) Widening from NC 191 to US 19/23

    a. What affect, if any, do you believe this project will have on the traffic volumes in the study area?

    b. Do you know of any reasonably foreseeable transportation projects that are not identified above that may affect traffic volumes in the traffic forecast study area?

6) There are existing forecasts for STIP projects I-4400/I-4700, I-2513, U-6047, and U-3403 that cover portions of the same study area as this forecast. Are you aware of any other previous traffic forecasts that were performed in or near the study area?

7) A preliminary review of data on municipal and county websites found current development information for Buncombe County (https://www.buncombecounty.org/governing/depts/planning/development-projects.aspx). Among the projects listed in the area are:
    - The Farm at Pond Road – 687 DU
    - Busbee at Sweeten Creek – 852 DU
    - MHO, Lakeshore Villas – 120 DU

    Do you know of any specific ongoing or planned developments in the vicinity of the traffic forecast area of which we should be made especially aware? And if so, could you provide information on those developments (type, accessibility, size, timeframe, etc)?

Study Area Questionnaire Sent to Local Planners

8) The proposed project will provide additional access to the Pratt & Whitney manufacturing center that is currently under construction and scheduled for completion in 2022. The proposed plant is anticipated to have 800 employees at a 1 million square foot facility. Are you aware of any projections or have any knowledge of any secondary development that may result due to the new manufacturing center?

9) Do you have any additional comments that would be helpful in our development of the traffic forecast?

10) This questionnaire is being sent to the following individuals:

   i. Steve Cannon, Division 13, Division Project Development Engineer (slcannon@ncdot.gov)
   ii. Brendan Merithew, Division 13 Project Team Lead (bemerithew@ncdot.gov)
   iii. H. McCray Coates, Division 13 Division Project Manager (hmcoates@ncdot.gov)
   iv. Anna Henderson, Division 13, Division Traffic Engineer (aghenderson@ncdot.gov)
   v. Christopher Medlin, Division 13, District 2 Engineer (cdmedlin@ncdot.gov)
   vi. Pam Cook, NCDOT Transportation Planning Division (Mountains Group) (prcook@ncdot.gov)
   vii. Daniel Sellers, NCDOT Transportation Planning Division (dcsellers1@ncdot.gov)
   viii. Tristan Winkler, FBRMPO, Director (tristan@landofsky.org)
   ix. Nick Kroncke, FBR MPO, Transportation Planner (nick@landofsky.org)
   x. Nathan Pennington, Buncombe County, Planning & Development Director (zoningquestions@buncombecounty.org)
   xi. Ken Putnam, City of Asheville, Transportation Department Director (kputnam@ashevillenc.gov)
   xii. Todd Okolichany, City of Asheville, Planning and Urban Design Director (tokolichany@ashevillenc.gov)
   xiii. Shannon Tuch, City of Asheville Principal Planner (stuch@ashevillenc.gov)
   xiv. Stacy Merten, City of Asheville Principal Long Range Planner (smerten@ashevillenc.gov)
   xv. Stephanie Dahl, City of Asheville Director of Strategic Development (sdahl@ashevillenc.gov)

   a. Are there any other individuals whom you think we should contact to discuss this forecast?

Comments completed by City of Asheville staff via link to Google Doc – 05/06/2021

Patriot Transportation Engineering is currently in the process of developing a traffic forecast for NCDOT STIP Project No. HE-0001, which would add an interchange to I-26 (proposed Exit 35) in Buncombe County. The forecast study area is shown in the following figure (with the approximate location of the proposed interchange marked with the star below):

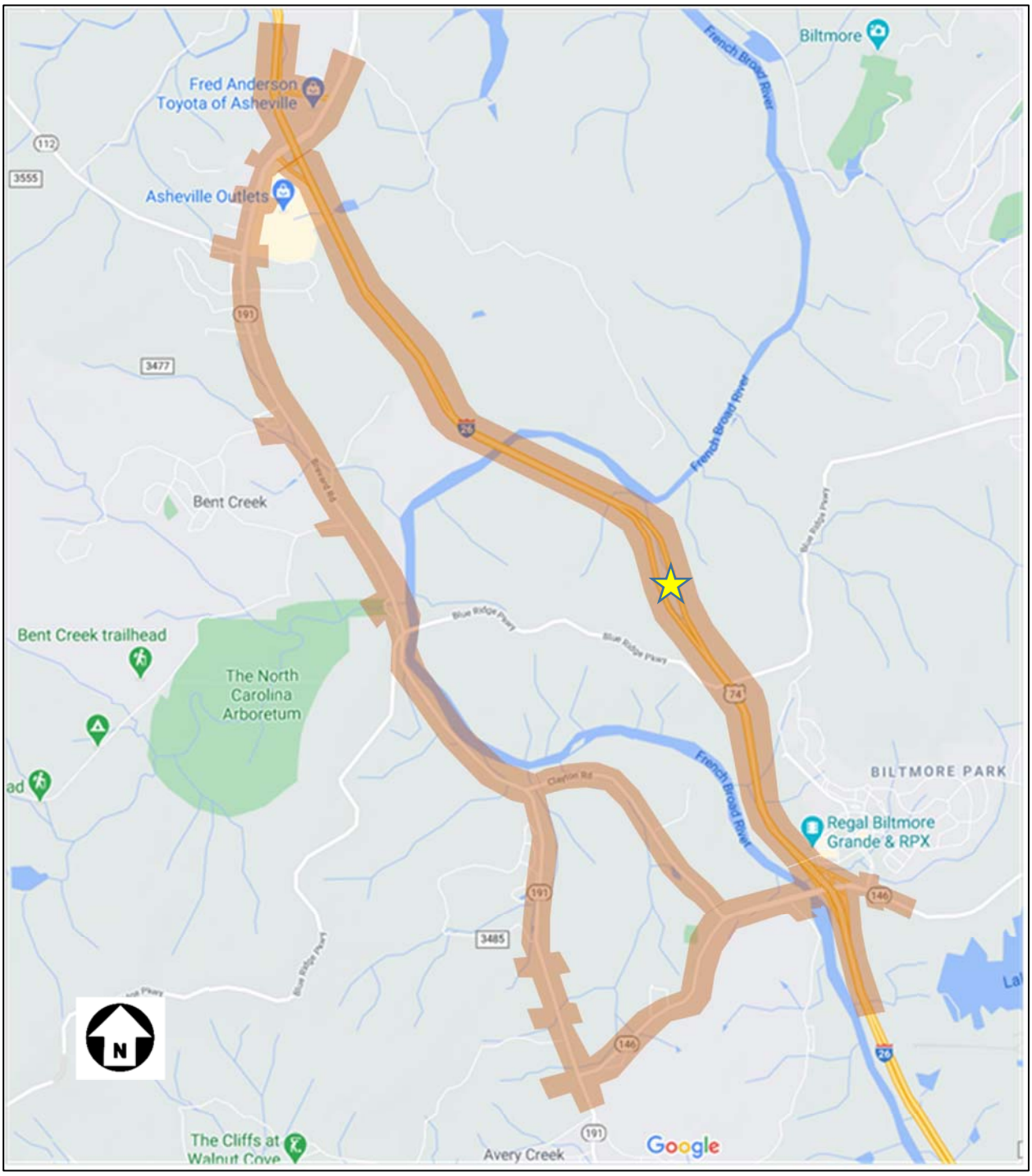

Comments completed by City of Asheville staff via link to Google Doc – 05/06/2021

We have reviewed the French Broad River Metropolitan Planning Organization (FBRMPO) *Metropolitan Transportation Plan 2045* (2045 MTP), and are seeking input from local planners and engineers who are familiar with the area. We have identified you as a local representative. I have listed a few questions below that will help us in the development of the traffic forecast. We would greatly appreciate your time in answering these questions. You may answer the questions in text format below and return them to me at: lee@pt-engineering.net.

If you would rather discuss the questions over the phone, I will be following up with a phone call early next week. Thank you in advance for your time and please let me know if you have any questions.

1) Current and historical traffic trends indicate that the traffic growth over the last 20 years along I-26 in the study area has generally increased overall, although traffic levels appeared to remain mostly stable from 2011 through 2015. Thus, the 10-year growth rates across the study roadway (which include the slower growth) are lower than the 20-year growth rates. The 20-year growth rates on I-26 range from 1.3% to 1.6% per year (and average 1.4%), and the 10-year growth rates range from 0.5% to 1.3% per year (and average 0.8%).

   Current and historical traffic trends on NC 191 (Brevard Rd) show a general increase of traffic, although traffic levels appeared to decline around the year 2007 and from there either remained relatively stable or slowly increased from the 2007 levels. Thus, the 20-year growth rates across NC 191 (which include the traffic decrease) are lower than the more recent 10-year growth rates (which generally feature stable volumes or recovery from the 2007 decrease). The 20-year growth rates on NC 191 range from 0.4% to 2.8% per year (and average 1.8%), and the 10-year growth rates range from -0.8% to 7.6% per year (and average 3.0%). Of note, the 10-year growth rate on NC 191 northeast of I-26 (7.6%), which was widened in 2010, is noticeably higher than the rest of the corridor. Without that portion of NC 191, the corridor's average 10-year growth rate is 2.2%.

   The historic volumes on NC 146 (Long Shoals Rd) in the study area show steady growth throughout the last 20 years. The 20-year growth rates range from 3.7% to 5.8% per year (and average 4.58%), and the 10-year growth rates range from 3.3% to 5.4% per year (and average 4.1%).

   The growth rates on the other roads connecting to the study corridor generally show similar historic trends in accordance with their geographic location within the study area. That is, the roads connecting to NC 191 show slow but steady growth, while the roads connecting to NC 146 show more robust growth rates. The roads connecting to NC 191 have an average 20-year growth rate of 0.9% per year and an average 10-year growth rate of 0.0% per year. For the roads connecting to NC 146, the average growth rates are 6.3% (20 year) and 8.3% (10 year).
   a. Do you agree with the growth patterns described? **The City of Asheville's Transportation Department agrees with the growth patterns described.**

   b. What growth patterns have you noticed? **N/A**

   c. Would you expect the growth rate to change substantially in the next 20 years? **N/A**

   d. Do you expect the growth rate to increase in the future? **N/A** If so, by what percent per year? **N/A**

2) The traffic forecast will include developing volumes for the average traffic situation. Aside from school being in session and the summer tourist season, are there any noticeable seasonal differences in traffic? Are there specific variations in seasonal visitor traffic to be aware of?

Comments completed by City of Asheville staff via link to Google Doc – 05/06/2021

Based on hotel occupancy rates from 2015-2019 Asheville and Buncombe County have become more of a year round destinations for tourists and other visitors. As you can see from the graph below, there was a slow down during the winter months, but the autumn peak, especially, was similar to the summer months. While there was a slow down during the Covid-19 Pandemic, visitation is expected to quickly rebound to pre-Covid levels.

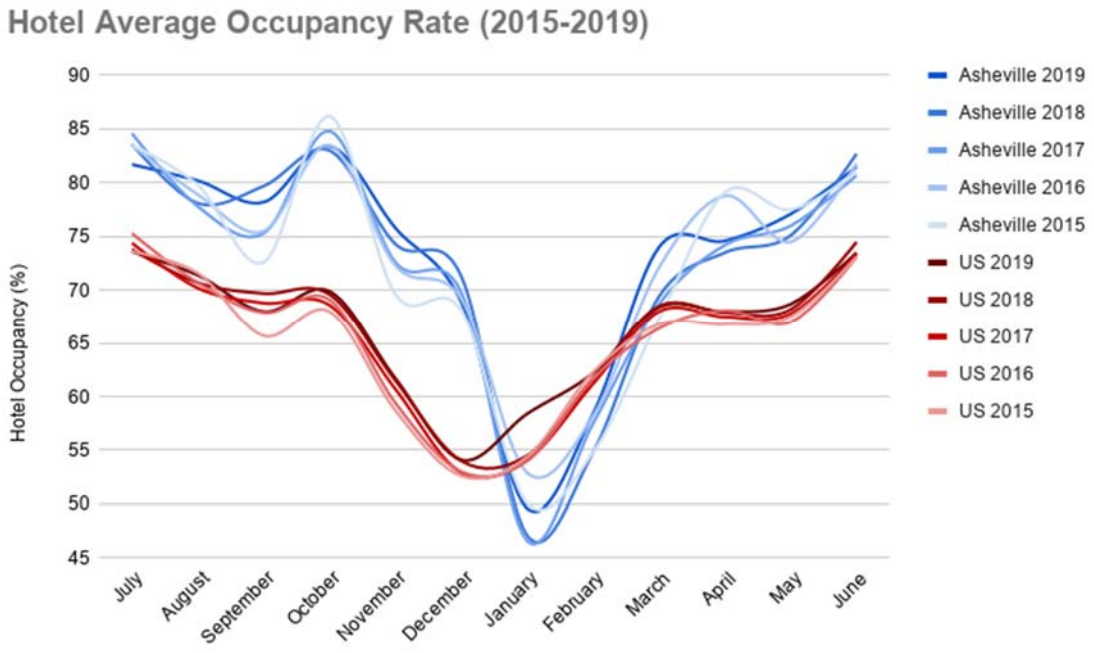

3) According to the North Carolina Office of State Budget and Management (OSBM) the population of Buncombe County was approximately 262,659 in 2019 and is projected to grow by 0.68% per year to around 313,400 in 2045. The population projections for the French Broad River MPO area that are contained within the 2045 MTP show a growth rate of 1.19% per year, with population projected to grow from 247,000 in 2015 to 353,000 in 2045.
   a. Do you think that the 0.68% to 1.19% population growth rate is reasonable for the project study area or do you think it will be higher or lower? See link below.

   b. Do you know of any other population projections for this area that may be helpful as we review the growth in the area?
   Please reference this link to population, trends and population heat map from the Asheville Comprehensive Plan.

4) The latest version of the FBRMPO Travel Demand Model shows that between 2015 and 2045, I-26 has a growth rate of roughly 1.7% per year. NC 191 shows a growth rate of approximately 1.0% per year south of the I-26 interchange and 3.2% per year north of the interchange. NC 146 shows a growth rate of approximately 1.9% per year. For the roads connecting to NC 191 and NC 146, the model shows growth rates of around 1.9% per year.
   a. Do you think that these traffic growth rates are reasonable for the project study area or do you think they will be higher or lower? **The City of Asheville's Transportation Department agrees with the growth patterns described.**

Comments completed by City of Asheville staff via link to Google Doc – 05/06/2021

5) The 2045 MTP includes the following projects in the vicinity of the forecast.
    - MTP ID HS4502 (STIP I-4700) – I-26 Widening from NC 280 to I-40
    - MTP ID HR4514 (STIP I-4400) – I-26 Widening from US 25 to NC 280
    - MTP ID HS4506 (STIP I-2513C) – I-26/I-40/I-240 interchange improvement
    - MTP ID HR4501 (STIP I-2513A) – I-26/I-240 Widening from I-40 to Haywood Rd
    - MTP ID HR4505 (STIP I-2513B) – I-26 Connector from Haywood Rd to Broadway
    - MTP ID HR4507 (STIP U-3403B) – NC 191 Widening from Ledbetter Rd to North of Blue Ridge Parkway
    - MTP ID HR4515 (STIP U-3403A) – NC 191 Widening from NC 146 to NC 280
    - MTP ID HD134510 (STIP U-6047) - NC 112 (Sand Hill/Sardis) Widening from NC 191 to US 19/23

    a. What affect, if any, do you believe this project will have on the traffic volumes in the study area? **Probably would increase the traffic volumes in the study area.**

    b. Do you know of any reasonably foreseeable transportation projects that are not identified above that may affect traffic volumes in the traffic forecast study area? **No**

6) There are existing forecasts for STIP projects I-4400/I-4700, I-2513, U-6047, and U-3403 that cover portions of the same study area as this forecast. Are you aware of any other previous traffic forecasts that were performed in or near the study area? **No**

7) A preliminary review of data on municipal and county websites found current development information for Buncombe County (https://www.buncombecounty.org/governing/depts/planning/development-projects.aspx). Among the projects listed in the area are:
    - The Farm at Pond Road – 687 DU
    - Busbee at Sweeten Creek – 852 DU
    - MHO, Lakeshore Villas – 120 DU

    Do you know of any specific ongoing or planned developments in the vicinity of the traffic forecast area of which we should be made especially aware? And if so, could you provide information on those developments (type, accessibility, size, timeframe, etc)?

    There was a proposed development on a 137 acre site located on Ferry Road. Although the developer pulled out there is still significant potential for development on this site. For more information contact Timothy Love, Director of Economic Development and Community Relations(Timothy.Love@buncombecounty.org) or Nate Pennington (nathan.pennington@buncombecounty.org)

    You may also want to review the Simplicity web site for more information on approved development within the City of Asheville in the vicinity of this project.

8) The proposed project will provide additional access to the Pratt & Whitney manufacturing center that is currently under construction and scheduled for completion in 2022. The proposed plant is anticipated to have 800 employees at a 1 million square foot facility. Are you aware of any projections or have any knowledge of any secondary development that may result due to the new manufacturing center? **No**

9) Do you have any additional comments that would be helpful in our development of the traffic forecast? **No**

10) This questionnaire is being sent to the following individuals:

Comments completed by City of Asheville staff via link to Google Doc – 05/06/2021

i. Steve Cannon, Division 13, Division Project Development Engineer (slcannon@ncdot.gov)
ii. Brendan Merithew, Division 13 Project Team Lead (bemerithew@ncdot.gov)
iii. H. McCray Coates, Division 13 Division Project Manager (hmcoates@ncdot.gov)
iv. Anna Henderson, Division 13, Division Traffic Engineer (aghenderson@ncdot.gov)
v. Christopher Medlin, Division 13, District 2 Engineer (cdmedlin@ncdot.gov)
vi. Pam Cook, NCDOT Transportation Planning Division (Mountains Group) (prcook@ncdot.gov)
vii. Daniel Sellers, NCDOT Transportation Planning Division (dcsellers1@ncdot.gov)
viii. Tristan Winkler, FBRMPO, Director (tristan@landofsky.org)
ix. Nick Kroncke, FBR MPO, Transportation Planner (nick@landofsky.org)
x. Nathan Pennington, Buncombe County, Planning & Development Director (zoningquestions@buncombecounty.org)
xi. Ken Putnam, City of Asheville, Transportation Department Director (kputnam@ashevillenc.gov)
xii. Todd Okolichany, City of Asheville, Planning and Urban Design Director (tokolichany@ashevillenc.gov)
xiii. Shannon Tuch, City of Asheville Principal Planner (stuch@ashevillenc.gov)
xiv. Stacy Merten, City of Asheville Principal Long Range Planner (smerten@ashevillenc.gov)
xv. Stephanie Dahl, City of Asheville Director of Strategic Development (sdahl@ashevillenc.gov)

a. Are there any other individuals whom you think we should contact to discuss this forecast?

Comments completed by Brendan Merithew via email – 05/10/2021

Patriot Transportation Engineering is currently in the process of developing a traffic forecast for NCDOT STIP Project No. HE-0001, which would add an interchange to I-26 (proposed Exit 35) in Buncombe County. The forecast study area is shown in the following figure (with the approximate location of the proposed interchange marked with the star below):

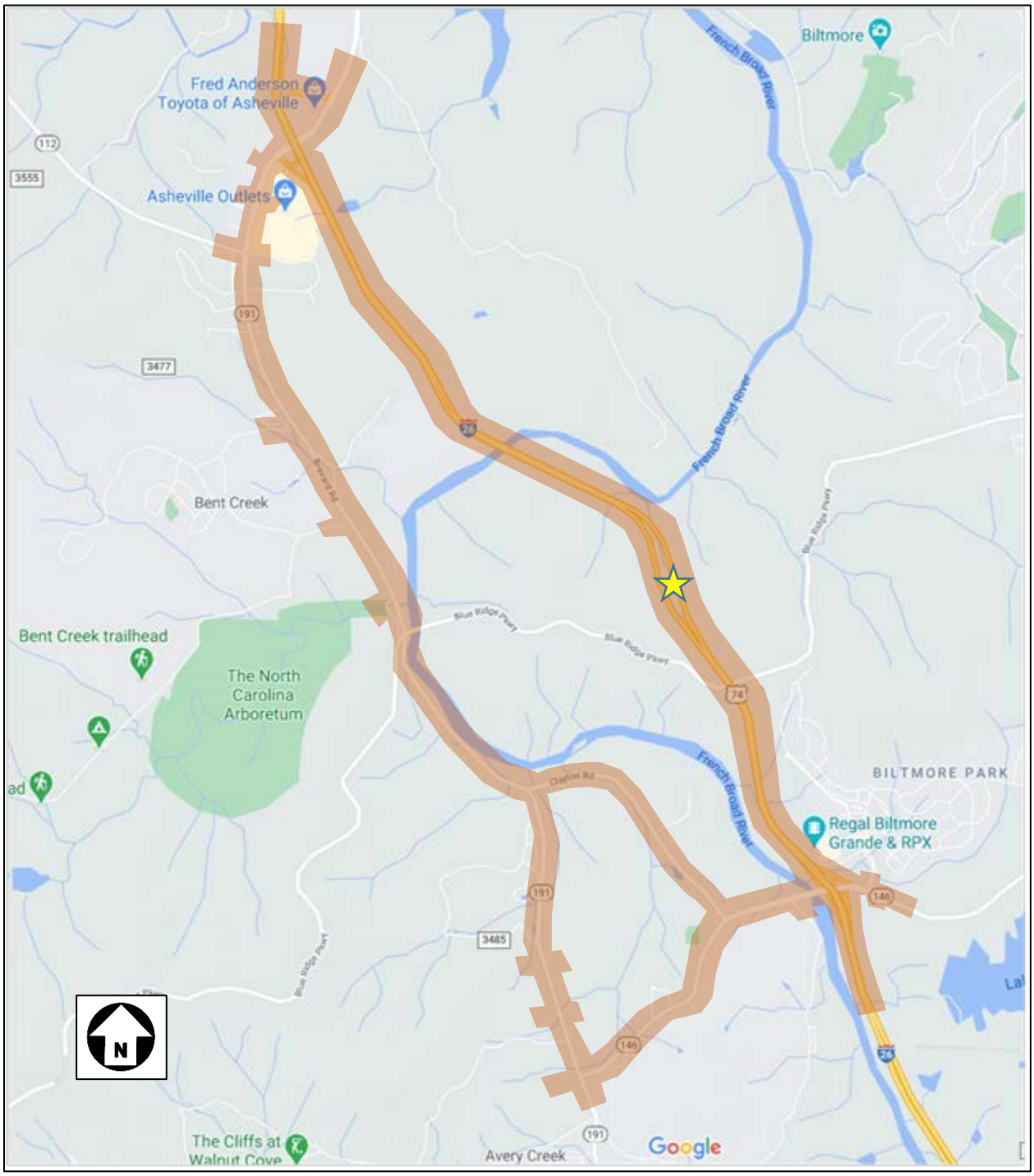

Comments completed by Brendan Merithew via email – 05/10/2021

We have reviewed the French Broad River Metropolitan Planning Organization (FBRMPO) *Metropolitan Transportation Plan 2045* (2045 MTP), and are seeking input from local planners and engineers who are familiar with the area. We have identified you as a local representative. I have listed a few questions below that will help us in the development of the traffic forecast. We would greatly appreciate your time in answering these questions. You may answer the questions in text format below and return them to me at: lee@pt-engineering.net.

If you would rather discuss the questions over the phone, I will be following up with a phone call early next week. Thank you in advance for your time and please let me know if you have any questions.

1) Current and historical traffic trends indicate that the traffic growth over the last 20 years along I-26 in the study area has generally increased overall, although traffic levels appeared to remain mostly stable from 2011 through 2015. Thus, the 10-year growth rates across the study roadway (which include the slower growth) are lower than the 20-year growth rates. The 20-year growth rates on I-26 range from 1.3% to 1.6% per year (and average 1.4%), and the 10-year growth rates range from 0.5% to 1.3% per year (and average 0.8%).

   Current and historical traffic trends on NC 191 (Brevard Rd) show a general increase of traffic, although traffic levels appeared to decline around the year 2007 and from there either remained relatively stable or slowly increased from the 2007 levels. Thus, the 20-year growth rates across NC 191 (which include the traffic decrease) are lower than the more recent 10-year growth rates (which generally feature stable volumes or recovery from the 2007 decrease). The 20-year growth rates on NC 191 range from 0.4% to 2.8% per year (and average 1.8%), and the 10-year growth rates range from -0.8% to 7.6% per year (and average 3.0%). Of note, the 10-year growth rate on NC 191 northeast of I-26 (7.6%), which was widened in 2010, is noticeably higher than the rest of the corridor. Without that portion of NC 191, the corridor's average 10-year growth rate is 2.2%.

   The historic volumes on NC 146 (Long Shoals Rd) in the study area show steady growth throughout the last 20 years. The 20-year growth rates range from 3.7% to 5.8% per year (and average 4.58%), and the 10-year growth rates range from 3.3% to 5.4% per year (and average 4.1%).

   The growth rates on the other roads connecting to the study corridor generally show similar historic trends in accordance with their geographic location within the study area. That is, the roads connecting to NC 191 show slow but steady growth, while the roads connecting to NC 146 show more robust growth rates. The roads connecting to NC 191 have an average 20-year growth rate of 0.9% per year and an average 10-year growth rate of 0.0% per year. For the roads connecting to NC 146, the average growth rates are 6.3% (20 year) and 8.3% (10 year).
   a. Do you agree with the growth patterns described? In general, I agree with the growth patterns. The figures in the 6-8% range seem high, and I would suspect these do not stay that high over time.

   b. What growth patterns have you noticed? The project area for the interchange (South Asheville in general) appears to have had significant increases in residential and commercial development in the past 10 years.

   c. Would you expect the growth rate to change substantially in the next 20 years? The past few years seem to have had significant growth in the area. This may continue at a high rate over the next few years, but I would expect the long-term growth rate to reach and sustain a level over somewhere in the 1-3% range in the future.

Comments completed by Brendan Merithew via email – 05/10/2021

   d. Do you expect the growth rate to increase in the future? If so, by what percent per year? I would expect it to be in the 1-3% range.

2) The traffic forecast will include developing volumes for the average traffic situation. Aside from school being in session and the summer tourist season, are there any noticeable seasonal differences in traffic? Are there specific variations in seasonal visitor traffic to be aware of? There is also the fall "leaf season" to be aware of, and spring often sees a general spike in visitor activity.

3) According to the North Carolina Office of State Budget and Management (OSBM) the population of Buncombe County was approximately 262,659 in 2019 and is projected to grow by 0.68% per year to around 313,400 in 2045. The population projections for the French Broad River MPO area that are contained within the 2045 MTP show a growth rate of 1.19% per year, with population projected to grow from 247,000 in 2015 to 353,000 in 2045.
   a. Do you think that the 0.68% to 1.19% population growth rate is reasonable for the project study area or do you think it will be higher or lower? I think the 1% range may be reasonable looking at the period from the last several years to 2045, however it may be that the rate in the earlier years of that range, from a few years ago to a few years from now, would be significantly higher than 1%, leveling of to around 1 or below for the remainder of the period.

   b. Do you know of any other population projections for this area that may be helpful as we review the growth in the area? No

4) The latest version of the FBRMPO Travel Demand Model shows that between 2015 and 2045, I-26 has a growth rate of roughly 1.7% per year. NC 191 shows a growth rate of approximately 1.0% per year south of the I-26 interchange and 3.2% per year north of the interchange. NC 146 shows a growth rate of approximately 1.9% per year. For the roads connecting to NC 191 and NC 146, the model shows growth rates of around 1.9% per year.
   a. Do you think that these traffic growth rates are reasonable for the project study area or do you think they will be higher or lower? Rates in the 1-3% range seem reasonable.

5) The 2045 MTP includes the following projects in the vicinity of the forecast.
   - MTP ID HS4502 (STIP I-4700) – I-26 Widening from NC 280 to I-40
   - MTP ID HR4514 (STIP I-4400) – I-26 Widening from US 25 to NC 280
   - MTP ID HS4506 (STIP I-2513C) – I-26/I-40/I-240 interchange improvement
   - MTP ID HR4501 (STIP I-2513A) – I-26/I-240 Widening from I-40 to Haywood Rd
   - MTP ID HR4505 (STIP I-2513B) – I-26 Connector from Haywood Rd to Broadway
   - MTP ID HR4507 (STIP U-3403B) – NC 191 Widening from Ledbetter Rd to North of Blue Ridge Parkway
   - MTP ID HR4515 (STIP U-3403A) – NC 191 Widening from NC 146 to NC 280
   - MTP ID HD134510 (STIP U-6047) - NC 112 (Sand Hill/Sardis) Widening from NC 191 to US 19/23

   a. What affect, if any, do you believe this project will have on the traffic volumes in the study area? The project may contribute to and help sustain the current projected traffic growth.

   b. Do you know of any reasonably foreseeable transportation projects that are not identified above that may affect traffic volumes in the traffic forecast study area? No

Comments completed by Brendan Merithew via email – 05/10/2021

6) There are existing forecasts for STIP projects I-4400/I-4700, I-2513, U-6047, and U-3403 that cover portions of the same study area as this forecast. Are you aware of any other previous traffic forecasts that were performed in or near the study area? There were forecasts developed for routes near and/or parallel to I-26 in the vicinity, such as U-2801A (improvements to Sweeten Creek Road) and U-5834, improvements to Mills Gap Road.

7) A preliminary review of data on municipal and county websites found current development information for Buncombe County (https://www.buncombecounty.org/governing/depts/planning/development-projects.aspx). Among the projects listed in the area are:
   - The Farm at Pond Road – 687 DU
   - Busbee at Sweeten Creek – 852 DU
   - MHO, Lakeshore Villas – 120 DU

   Do you know of any specific ongoing or planned developments in the vicinity of the traffic forecast area of which we should be made especially aware? And if so, could you provide information on those developments (type, accessibility, size, timeframe, etc)? No

8) The proposed project will provide additional access to the Pratt & Whitney manufacturing center that is currently under construction and scheduled for completion in 2022. The proposed plant is anticipated to have 800 employees at a 1 million square foot facility. Are you aware of any projections or have any knowledge of any secondary development that may result due to the new manufacturing center? No

9) Do you have any additional comments that would be helpful in our development of the traffic forecast? No

10) This questionnaire is being sent to the following individuals:

   i. Steve Cannon, Division 13, Division Project Development Engineer (slcannon@ncdot.gov)
   ii. Brendan Merithew, Division 13 Project Team Lead (bemerithew@ncdot.gov)
   iii. H. McCray Coates, Division 13 Division Project Manager (hmcoates@ncdot.gov)
   iv. Anna Henderson, Division 13, Division Traffic Engineer (aghenderson@ncdot.gov)
   v. Christopher Medlin, Division 13, District 2 Engineer (cdmedlin@ncdot.gov)
   vi. Pam Cook, NCDOT Transportation Planning Division (Mountains Group) (prcook@ncdot.gov)
   vii. Daniel Sellers, NCDOT Transportation Planning Division (dcsellers1@ncdot.gov)
   viii. Tristan Winkler, FBRMPO, Director (tristan@landofsky.org)
   ix. Nick Kroncke, FBR MPO, Transportation Planner (nick@landofsky.org)
   x. Nathan Pennington, Buncombe County, Planning & Development Director (zoningquestions@buncombecounty.org)
   xi. Ken Putnam, City of Asheville, Transportation Department Director (kputnam@ashevillenc.gov)
   xii. Todd Okolichany, City of Asheville, Planning and Urban Design Director (tokolichany@ashevillenc.gov)
   xiii. Shannon Tuch, City of Asheville Principal Planner (stuch@ashevillenc.gov)
   xiv. Stacy Merten, City of Asheville Principal Long Range Planner (smerten@ashevillenc.gov)
   xv. Stephanie Dahl, City of Asheville Director of Strategic Development (sdahl@ashevillenc.gov)

   a. Are there any other individuals whom you think we should contact to discuss this forecast?

Comments completed by Daniel Sellers via email – 05/02/2021

Patriot Transportation Engineering is currently in the process of developing a traffic forecast for NCDOT STIP Project No. HE-0001, which would add an interchange to I-26 (proposed Exit 35) in Buncombe County. The forecast study area is shown in the following figure (with the approximate location of the proposed interchange marked with the star below):

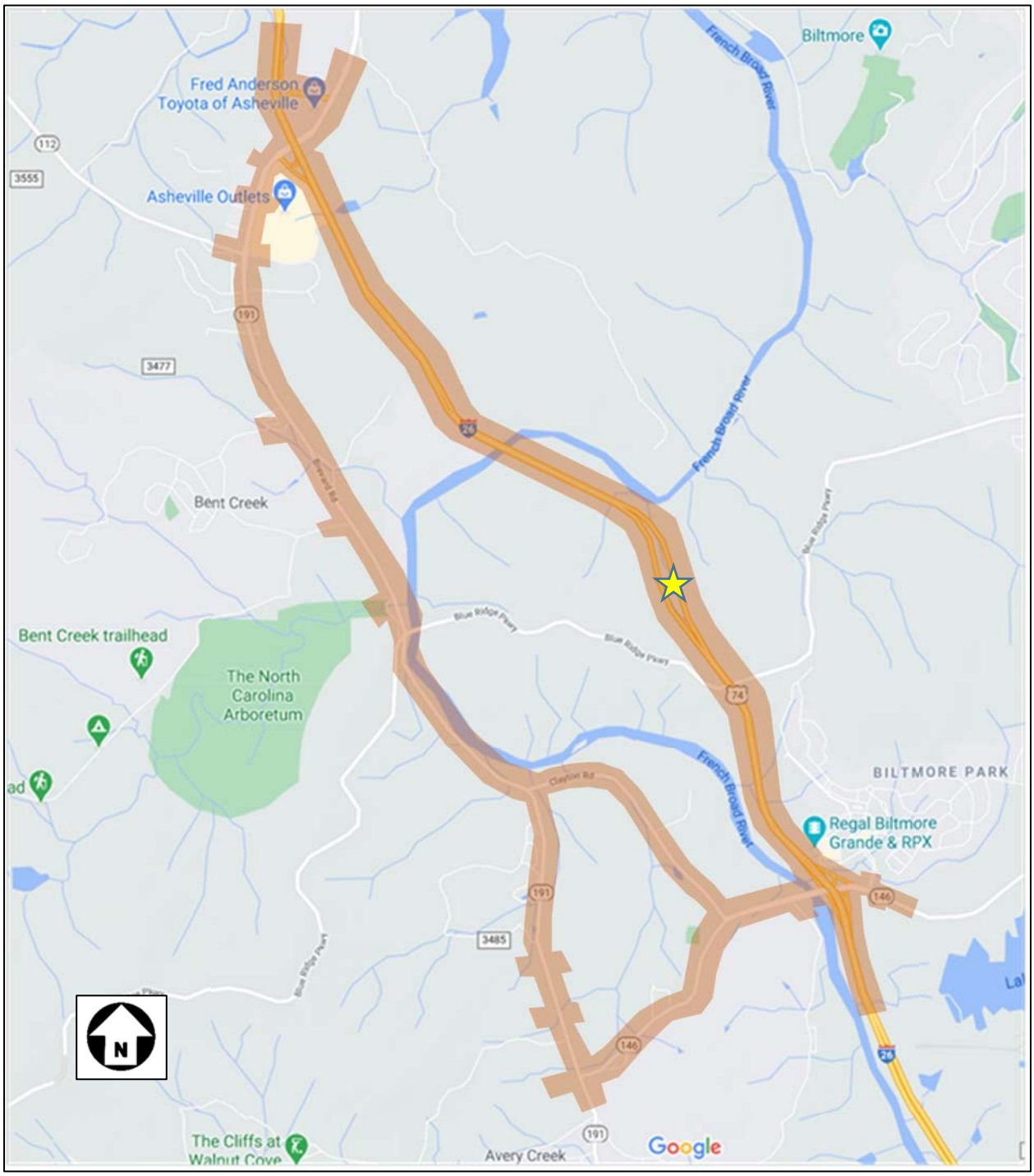

Comments completed by Daniel Sellers via email – 05/02/2021

We have reviewed the French Broad River Metropolitan Planning Organization (FBRMPO) *Metropolitan Transportation Plan 2045* (2045 MTP), and are seeking input from local planners and engineers who are familiar with the area. We have identified you as a local representative. I have listed a few questions below that will help us in the development of the traffic forecast. We would greatly appreciate your time in answering these questions. You may answer the questions in text format below and return them to me at: lee@pt-engineering.net.

If you would rather discuss the questions over the phone, I will be following up with a phone call early next week. Thank you in advance for your time and please let me know if you have any questions.

1) Current and historical traffic trends indicate that the traffic growth over the last 20 years along I-26 in the study area has generally increased overall, although traffic levels appeared to remain mostly stable from 2011 through 2015. Thus, the 10-year growth rates across the study roadway (which include the slower growth) are lower than the 20-year growth rates. The 20-year growth rates on I-26 range from 1.3% to 1.6% per year (and average 1.4%), and the 10-year growth rates range from 0.5% to 1.3% per year (and average 0.8%).

   Current and historical traffic trends on NC 191 (Brevard Rd) show a general increase of traffic, although traffic levels appeared to decline around the year 2007 and from there either remained relatively stable or slowly increased from the 2007 levels. Thus, the 20-year growth rates across NC 191 (which include the traffic decrease) are lower than the more recent 10-year growth rates (which generally feature stable volumes or recovery from the 2007 decrease). The 20-year growth rates on NC 191 range from 0.4% to 2.8% per year (and average 1.8%), and the 10-year growth rates range from -0.8% to 7.6% per year (and average 3.0%). Of note, the 10-year growth rate on NC 191 northeast of I-26 (7.6%), which was widened in 2010, is noticeably higher than the rest of the corridor. Without that portion of NC 191, the corridor's average 10-year growth rate is 2.2%.

   The historic volumes on NC 146 (Long Shoals Rd) in the study area show steady growth throughout the last 20 years. The 20-year growth rates range from 3.7% to 5.8% per year (and average 4.58%), and the 10-year growth rates range from 3.3% to 5.4% per year (and average 4.1%).

   The growth rates on the other roads connecting to the study corridor generally show similar historic trends in accordance with their geographic location within the study area. That is, the roads connecting to NC 191 show slow but steady growth, while the roads connecting to NC 146 show more robust growth rates. The roads connecting to NC 191 have an average 20-year growth rate of 0.9% per year and an average 10-year growth rate of 0.0% per year. For the roads connecting to NC 146, the average growth rates are 6.3% (20 year) and 8.3% (10 year).

   a. Do you agree with the growth patterns described?

      I'm confident you pulled the data correctly. The low growth rates on I-26 surprise me. Without check, my first question is weather there is existing capacity constraint. Since there are relatively few NS corridors in this area and they area all nearing capacity.

   b. What growth patterns have you noticed?

      The area along the Buncombe and Henderson County line has been experiencing much infill and is projected to be one of the highest development areas in the region over the next 20 years.

   c. Would you expect the growth rate to change substantially in the next 20 years?

Comments completed by Daniel Sellers via email – 05/02/2021

Per my comment in part A. As I-26 is widened, induced demand will be a factor in future traffic projections.

d. Do you expect the growth rate to increase in the future? If so, by what percent per year?

For the roads that are not I-26, continued development will probably happen at pace. The FBRMPO TDM will have the latest LU projections. This project has direct trip generation, but also presents a potential for secondary development that may or may not be in excess of that LU projection.

2) The traffic forecast will include developing volumes for the average traffic situation. Aside from school being in session and the summer tourist season, are there any noticeable seasonal differences in traffic? Are there specific variations in seasonal visitor traffic to be aware of?

The MPO probably has this data in a convenient format. But the Leaf Season peak in this area is quite substantial. That makes October the highest month for traffic counts. I believe the North side of NC 191 has the farmers market which may have some additional seasonal variation. And the Arboretum's event calendar is also worth checking.

3) According to the North Carolina Office of State Budget and Management (OSBM) the population of Buncombe County was approximately 262,659 in 2019 and is projected to grow by 0.68% per year to around 313,400 in 2045. The population projections for the French Broad River MPO area that are contained within the 2045 MTP show a growth rate of 1.19% per year, with population projected to grow from 247,000 in 2015 to 353,000 in 2045.

a. Do you think that the 0.68% to 1.19% population growth rate is reasonable for the project study area or do you think it will be higher or lower?

Check the LU technical memo, but I thought the projections were calibrated against the county projections from the state demographer. Incidentally, the demographer uses a historical linear projection to estimate the FY populations. And the attractiveness of the FBR region has been increasing, so I would expect a higher growth. I think the final Tech memo will show that the FBMRPO choice to control for the regional population, and then used the LU model (Rent-Bid) to distribute that growth. Otherwise weird incongruities happened at the county lines, including Henderson-Buncombe.

b. Do you know of any other population projections for this area that may be helpful as we review the growth in the area?

I'm pretty sure those (FBRMPO TDM LU) are the newest and best.

4) The latest version of the FBRMPO Travel Demand Model shows that between 2015 and 2045, I-26 has a growth rate of roughly 1.7% per year. NC 191 shows a growth rate of approximately 1.0% per year south of the I-26 interchange and 3.2% per year north of the interchange. NC 146 shows a growth rate of approximately 1.9% per year. For the roads connecting to NC 191 and NC 146, the model shows growth rates of around 1.9% per year.

a. Do you think that these traffic growth rates are reasonable for the project study area or do you think they will be higher or lower?

Those sound fine. The one that draws my eye is NC 191 North of I-26. I wonder if the model is bypassing the interchange to I-440?

5) The 2045 MTP includes the following projects in the vicinity of the forecast.

- MTP ID HS4502 (STIP I-4700) – I-26 Widening from NC 280 to I-40
- MTP ID HR4514 (STIP I-4400) – I-26 Widening from US 25 to NC 280
- MTP ID HS4506 (STIP I-2513C) – I-26/I-40/I-240 interchange improvement

Comments completed by Daniel Sellers via email – 05/02/2021

- MTP ID HR4501 (STIP I-2513A) – I-26/I-240 Widening from I-40 to Haywood Rd
- MTP ID HR4505 (STIP I-2513B) – I-26 Connector from Haywood Rd to Broadway
- MTP ID HR4507 (STIP U-3403B) – NC 191 Widening from Ledbetter Rd to North of Blue Ridge Parkway
- MTP ID HR4515 (STIP U-3403A) – NC 191 Widening from NC 146 to NC 280
- MTP ID HD134510 (STIP U-6047) - NC 112 (Sand Hill/Sardis) Widening from NC 191 to US 19/23

a. What affect, if any, do you believe this project will have on the traffic volumes in the study area?

b. Do you know of any reasonably foreseeable transportation projects that are not identified above that may affect traffic volumes in the traffic forecast study area?
The major widening projects to the east of I-26 will be shifting traffic. Sweeten Creek Road, and Hendersonville rd.

6) There are existing forecasts for STIP projects I-4400/I-4700, I-2513, U-6047, and U-3403 that cover portions of the same study area as this forecast. Are you aware of any other previous traffic forecasts that were performed in or near the study area?
See 5 b

7) A preliminary review of data on municipal and county websites found current development information for Buncombe County (https://www.buncombecounty.org/governing/depts/planning/development-projects.aspx). Among the projects listed in the area are:
   - The Farm at Pond Road – 687 DU
   - Busbee at Sweeten Creek – 852 DU
   - MHO, Lakeshore Villas – 120 DU

   Do you know of any specific ongoing or planned developments in the vicinity of the traffic forecast area of which we should be made especially aware? And if so, could you provide information on those developments (type, accessibility, size, timeframe, etc)?
   I am not aware of any residential Developments. The Enka Village development is industrial and mixed use.

8) The proposed project will provide additional access to the Pratt & Whitney manufacturing center that is currently under construction and scheduled for completion in 2022. The proposed plant is anticipated to have 800 employees at a 1 million square foot facility. Are you aware of any projections or have any knowledge of any secondary development that may result due to the new manufacturing center?
The build out site plan for this property is the only thing I'm aware of at this point.

9) Do you have any additional comments that would be helpful in our development of the traffic forecast?

10) This questionnaire is being sent to the following individuals:

i. Steve Cannon, Division 13, Division Project Development Engineer (slcannon@ncdot.gov)
ii. Brendan Merithew, Division 13 Project Team Lead (bemerithew@ncdot.gov)
iii. H. McCray Coates, Division 13 Division Project Manager (hmcoates@ncdot.gov)
iv. Anna Henderson, Division 13, Division Traffic Engineer (aghenderson@ncdot.gov)

Comments completed by Daniel Sellers via email – 05/02/2021

v. Christopher Medlin, Division 13, District 2 Engineer (cdmedlin@ncdot.gov)
vi. Pam Cook, NCDOT Transportation Planning Division (Mountains Group) (prcook@ncdot.gov)
vii. Daniel Sellers, NCDOT Transportation Planning Division (dcsellers1@ncdot.gov)
viii. Tristan Winkler, FBRMPO, Director (tristan@landofsky.org)
ix. Nick Kroncke, FBR MPO, Transportation Planner (nick@landofsky.org)
x. Nathan Pennington, Buncombe County, Planning & Development Director (zoningquestions@buncombecounty.org)
xi. Ken Putnam, City of Asheville, Transportation Department Director (kputnam@ashevillenc.gov)
xii. Todd Okolichany, City of Asheville, Planning and Urban Design Director (tokolichany@ashevillenc.gov)
xiii. Shannon Tuch, City of Asheville Principal Planner (stuch@ashevillenc.gov)
xiv. Stacy Merten, City of Asheville Principal Long Range Planner (smerten@ashevillenc.gov)
xv. Stephanie Dahl, City of Asheville Director of Strategic Development (sdahl@ashevillenc.gov)

a. Are there any other individuals whom you think we should contact to discuss this forecast?

Comments completed by Steve Cannon via email – 05/07/2021

Patriot Transportation Engineering is currently in the process of developing a traffic forecast for NCDOT STIP Project No. HE-0001, which would add an interchange to I-26 (proposed Exit 35) in Buncombe County. The forecast study area is shown in the following figure (with the approximate location of the proposed interchange marked with the star below):

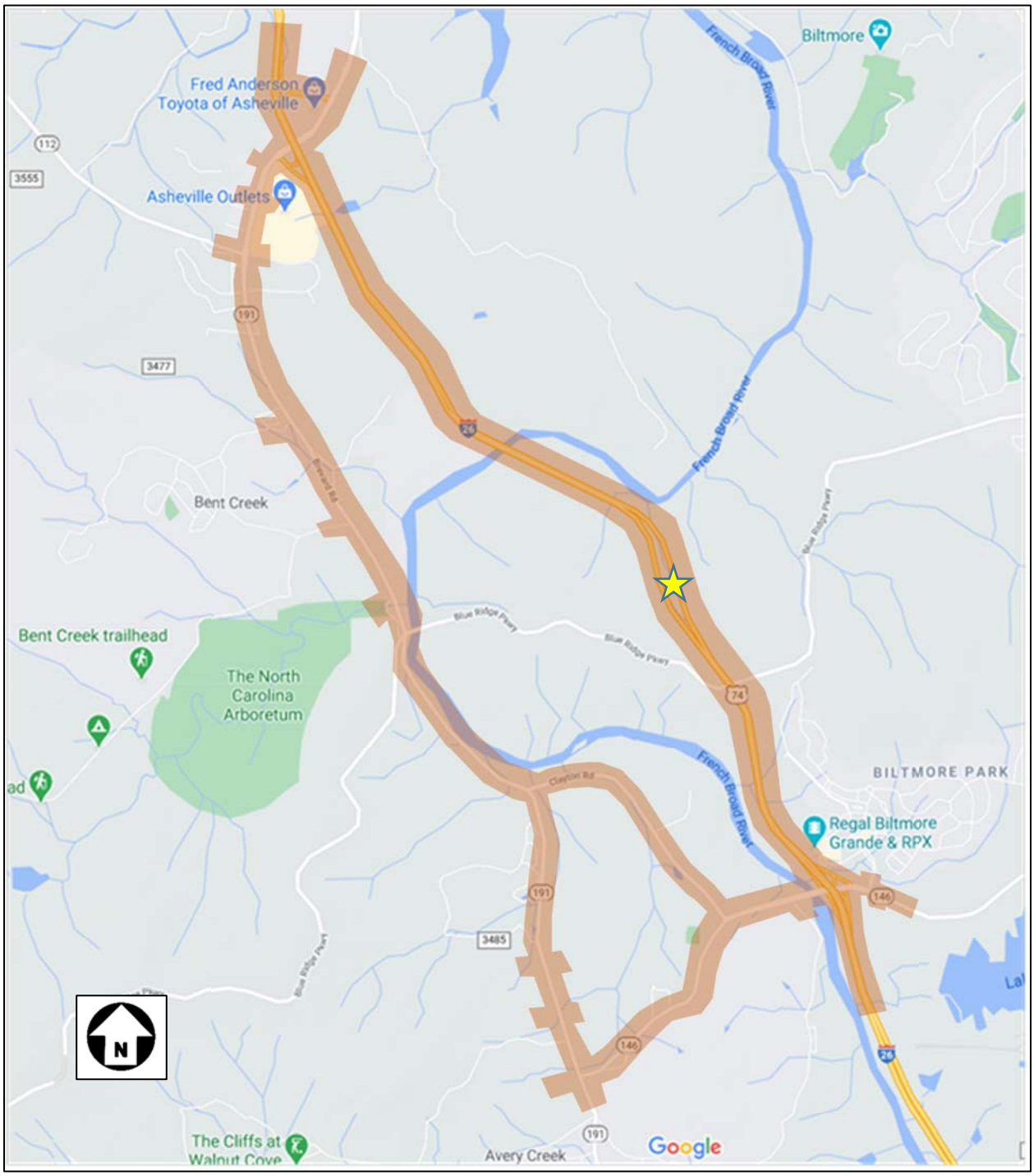

Comments completed by Steve Cannon via email – 05/07/2021

We have reviewed the French Broad River Metropolitan Planning Organization (FBRMPO) *Metropolitan Transportation Plan 2045* (2045 MTP), and are seeking input from local planners and engineers who are familiar with the area. We have identified you as a local representative. I have listed a few questions below that will help us in the development of the traffic forecast. We would greatly appreciate your time in answering these questions. You may answer the questions in text format below and return them to me at: lee@pt-engineering.net.

If you would rather discuss the questions over the phone, I will be following up with a phone call early next week. Thank you in advance for your time and please let me know if you have any questions.

1) Current and historical traffic trends indicate that the traffic growth over the last 20 years along I-26 in the study area has generally increased overall, although traffic levels appeared to remain mostly stable from 2011 through 2015. Thus, the 10-year growth rates across the study roadway (which include the slower growth) are lower than the 20-year growth rates. The 20-year growth rates on I-26 range from 1.3% to 1.6% per year (and average 1.4%), and the 10-year growth rates range from 0.5% to 1.3% per year (and average 0.8%).

   Current and historical traffic trends on NC 191 (Brevard Rd) show a general increase of traffic, although traffic levels appeared to decline around the year 2007 and from there either remained relatively stable or slowly increased from the 2007 levels. Thus, the 20-year growth rates across NC 191 (which include the traffic decrease) are lower than the more recent 10-year growth rates (which generally feature stable volumes or recovery from the 2007 decrease). The 20-year growth rates on NC 191 range from 0.4% to 2.8% per year (and average 1.8%), and the 10-year growth rates range from -0.8% to 7.6% per year (and average 3.0%). Of note, the 10-year growth rate on NC 191 northeast of I-26 (7.6%), which was widened in 2010, is noticeably higher than the rest of the corridor. Without that portion of NC 191, the corridor's average 10-year growth rate is 2.2%.

   The historic volumes on NC 146 (Long Shoals Rd) in the study area show steady growth throughout the last 20 years. The 20-year growth rates range from 3.7% to 5.8% per year (and average 4.58%), and the 10-year growth rates range from 3.3% to 5.4% per year (and average 4.1%).

   The growth rates on the other roads connecting to the study corridor generally show similar historic trends in accordance with their geographic location within the study area. That is, the roads connecting to NC 191 show slow but steady growth, while the roads connecting to NC 146 show more robust growth rates. The roads connecting to NC 191 have an average 20-year growth rate of 0.9% per year and an average 10-year growth rate of 0.0% per year. For the roads connecting to NC 146, the average growth rates are 6.3% (20 year) and 8.3% (10 year).

   a. Do you agree with the growth patterns described? I did not expect the I-26 growth rate for 10 yr to be below 1%. Otherwise, the rates seem reasonable for the area.

   b. What growth patterns have you noticed? Increased traffic volumes consistently throughout the year as opposed to seasonal fluctuations. Increased commuter traffic volumes.

   c. Would you expect the growth rate to change substantially in the next 20 years? I would anticipate some increase in growth rate, but would not say substantial.

   d. Do you expect the growth rate to increase in the future? Yes. If so, by what percent per year? 2%

Comments completed by Steve Cannon via email – 05/07/2021

2) The traffic forecast will include developing volumes for the average traffic situation. Aside from school being in session and the summer tourist season, are there any noticeable seasonal differences in traffic? Typically see peaks in Fall leaf viewing season. Slight decrease in winter months. Are there specific variations in seasonal visitor traffic to be aware of? Fall leaf season.

3) According to the North Carolina Office of State Budget and Management (OSBM) the population of Buncombe County was approximately 262,659 in 2019 and is projected to grow by 0.68% per year to around 313,400 in 2045. The population projections for the French Broad River MPO area that are contained within the 2045 MTP show a growth rate of 1.19% per year, with population projected to grow from 247,000 in 2015 to 353,000 in 2045.
   a. Do you think that the 0.68% to 1.19% population growth rate is reasonable for the project study area or do you think it will be higher or lower?

   b. Do you know of any other population projections for this area that may be helpful as we review the growth in the area?

4) The latest version of the FBRMPO Travel Demand Model shows that between 2015 and 2045, I-26 has a growth rate of roughly 1.7% per year. NC 191 shows a growth rate of approximately 1.0% per year south of the I-26 interchange and 3.2% per year north of the interchange. NC 146 shows a growth rate of approximately 1.9% per year. For the roads connecting to NC 191 and NC 146, the model shows growth rates of around 1.9% per year.
   a. Do you think that these traffic growth rates are reasonable for the project study area or do you think they will be higher or lower? Reasonable

5) The 2045 MTP includes the following projects in the vicinity of the forecast.
   - MTP ID HS4502 (STIP I-4700) – I-26 Widening from NC 280 to I-40
   - MTP ID HR4514 (STIP I-4400) – I-26 Widening from US 25 to NC 280
   - MTP ID HS4506 (STIP I-2513C) – I-26/I-40/I-240 interchange improvement
   - MTP ID HR4501 (STIP I-2513A) – I-26/I-240 Widening from I-40 to Haywood Rd
   - MTP ID HR4505 (STIP I-2513B) – I-26 Connector from Haywood Rd to Broadway
   - MTP ID HR4507 (STIP U-3403B) – NC 191 Widening from Ledbetter Rd to North of Blue Ridge Parkway
   - MTP ID HR4515 (STIP U-3403A) – NC 191 Widening from NC 146 to NC 280
   - MTP ID HD134510 (STIP U-6047) - NC 112 (Sand Hill/Sardis) Widening from NC 191 to US 19/23

   a. What affect, if any, do you believe this project will have on the traffic volumes in the study area? Slight increase in destination traffic (employee/shipping). May result in decrease at adjacent interchanges due to more direct access to BRP and NC Arboretum. Would not expect substantial changes.

   b. Do you know of any reasonably foreseeable transportation projects that are not identified above that may affect traffic volumes in the traffic forecast study area? U-2801A, though traffic there is mostly destination

6) There are existing forecasts for STIP projects I-4400/I-4700, I-2513, U-6047, and U-3403 that cover portions of the same study area as this forecast. Are you aware of any other previous traffic forecasts that were performed in or near the study area? No. U-2801A forecast does not cover this area.

Comments completed by Steve Cannon via email – 05/07/2021

7) A preliminary review of data on municipal and county websites found current development information for Buncombe County (https://www.buncombecounty.org/governing/depts/planning/development-projects.aspx). Among the projects listed in the area are:
    - The Farm at Pond Road – 687 DU
    - Busbee at Sweeten Creek – 852 DU
    - MHO, Lakeshore Villas – 120 DU

   Do you know of any specific ongoing or planned developments in the vicinity of the traffic forecast area of which we should be made especially aware? And if so, could you provide information on those developments (type, accessibility, size, timeframe, etc)?

8) The proposed project will provide additional access to the Pratt & Whitney manufacturing center that is currently under construction and scheduled for completion in 2022. The proposed plant is anticipated to have 800 employees at a 1 million square foot facility. Are you aware of any projections or have any knowledge of any secondary development that may result due to the new manufacturing center?

9) Do you have any additional comments that would be helpful in our development of the traffic forecast?

10) This questionnaire is being sent to the following individuals:

    i. Steve Cannon, Division 13, Division Project Development Engineer (slcannon@ncdot.gov)
    ii. Brendan Merithew, Division 13 Project Team Lead (bemerithew@ncdot.gov)
    iii. H. McCray Coates, Division 13 Division Project Manager (hmcoates@ncdot.gov)
    iv. Anna Henderson, Division 13, Division Traffic Engineer (aghenderson@ncdot.gov)
    v. Christopher Medlin, Division 13, District 2 Engineer (cdmedlin@ncdot.gov)
    vi. Pam Cook, NCDOT Transportation Planning Division (Mountains Group) (prcook@ncdot.gov)
    vii. Daniel Sellers, NCDOT Transportation Planning Division (dcsellers1@ncdot.gov)
    viii. Tristan Winkler, FBRMPO, Director (tristan@landofsky.org)
    ix. Nick Kroncke, FBR MPO, Transportation Planner (nick@landofsky.org)
    x. Nathan Pennington, Buncombe County, Planning & Development Director (zoningquestions@buncombecounty.org)
    xi. Ken Putnam, City of Asheville, Transportation Department Director (kputnam@ashevillenc.gov)
    xii. Todd Okolichany, City of Asheville, Planning and Urban Design Director (tokolichany@ashevillenc.gov)
    xiii. Shannon Tuch, City of Asheville Principal Planner (stuch@ashevillenc.gov)
    xiv. Stacy Merten, City of Asheville Principal Long Range Planner (smerten@ashevillenc.gov)
    xv. Stephanie Dahl, City of Asheville Director of Strategic Development (sdahl@ashevillenc.gov)

    a. Are there any other individuals whom you think we should contact to discuss this forecast?

Comments completed by William High (and Nathan Pennington) via email – 05/07/2021

Patriot Transportation Engineering is currently in the process of developing a traffic forecast for NCDOT STIP Project No. HE-0001, which would add an interchange to I-26 (proposed Exit 35) in Buncombe County. The forecast study area is shown in the following figure (with the approximate location of the proposed interchange marked with the star below):

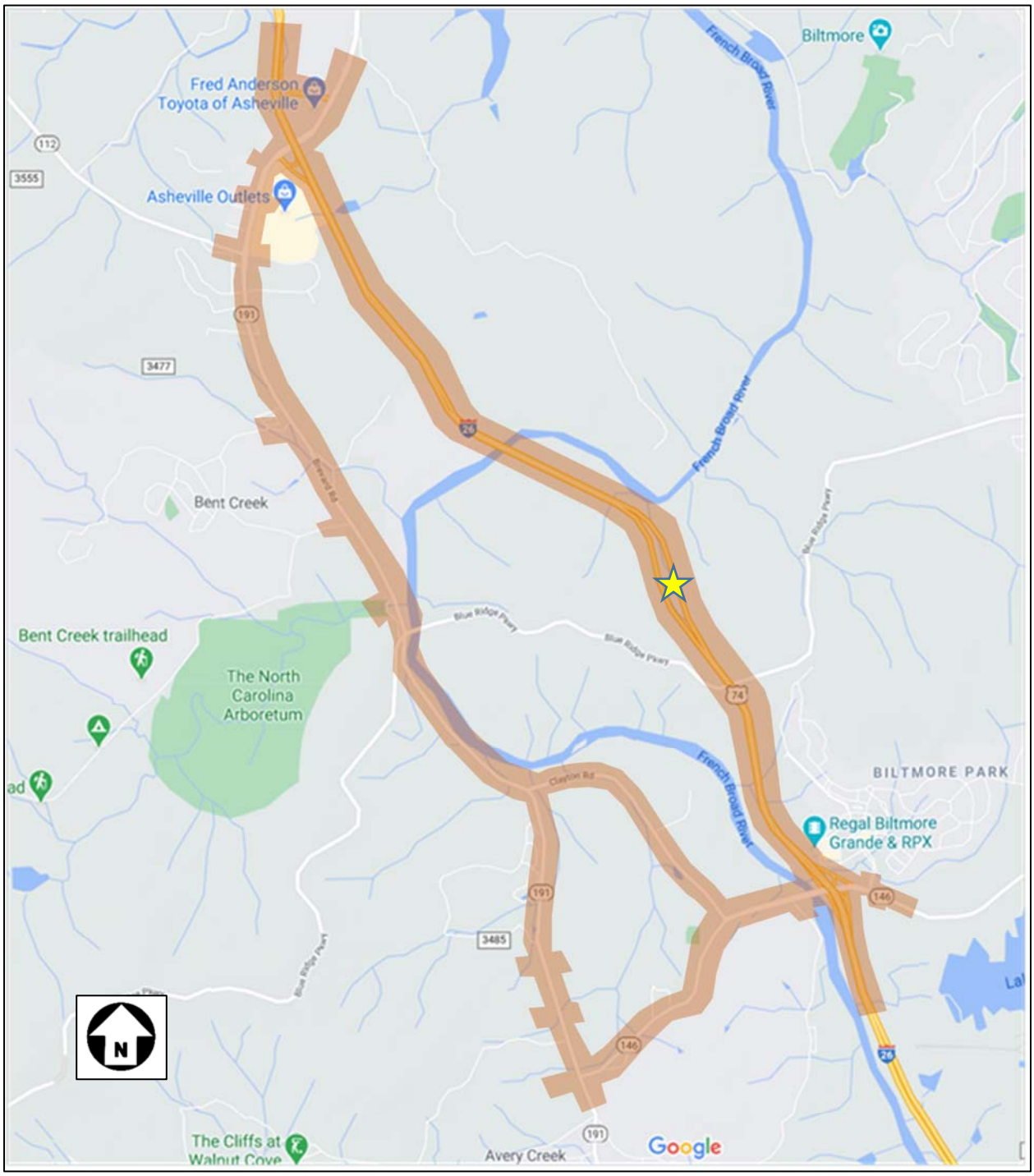

Comments completed by William High (and Nathan Pennington) via email – 05/07/2021

We have reviewed the French Broad River Metropolitan Planning Organization (FBRMPO) *Metropolitan Transportation Plan 2045* (2045 MTP), and are seeking input from local planners and engineers who are familiar with the area. We have identified you as a local representative. I have listed a few questions below that will help us in the development of the traffic forecast. We would greatly appreciate your time in answering these questions. You may answer the questions in text format below and return them to me at: lee@pt-engineering.net.

If you would rather discuss the questions over the phone, I will be following up with a phone call early next week. Thank you in advance for your time and please let me know if you have any questions.

1) Current and historical traffic trends indicate that the traffic growth over the last 20 years along I-26 in the study area has generally increased overall, although traffic levels appeared to remain mostly stable from 2011 through 2015. Thus, the 10-year growth rates across the study roadway (which include the slower growth) are lower than the 20-year growth rates. The 20-year growth rates on I-26 range from 1.3% to 1.6% per year (and average 1.4%), and the 10-year growth rates range from 0.5% to 1.3% per year (and average 0.8%).

   Current and historical traffic trends on NC 191 (Brevard Rd) show a general increase of traffic, although traffic levels appeared to decline around the year 2007 and from there either remained relatively stable or slowly increased from the 2007 levels. Thus, the 20-year growth rates across NC 191 (which include the traffic decrease) are lower than the more recent 10-year growth rates (which generally feature stable volumes or recovery from the 2007 decrease). The 20-year growth rates on NC 191 range from 0.4% to 2.8% per year (and average 1.8%), and the 10-year growth rates range from -0.8% to 7.6% per year (and average 3.0%). Of note, the 10-year growth rate on NC 191 northeast of I-26 (7.6%), which was widened in 2010, is noticeably higher than the rest of the corridor. Without that portion of NC 191, the corridor's average 10-year growth rate is 2.2%.

   The historic volumes on NC 146 (Long Shoals Rd) in the study area show steady growth throughout the last 20 years. The 20-year growth rates range from 3.7% to 5.8% per year (and average 4.58%), and the 10-year growth rates range from 3.3% to 5.4% per year (and average 4.1%).

   The growth rates on the other roads connecting to the study corridor generally show similar historic trends in accordance with their geographic location within the study area. That is, the roads connecting to NC 191 show slow but steady growth, while the roads connecting to NC 146 show more robust growth rates. The roads connecting to NC 191 have an average 20-year growth rate of 0.9% per year and an average 10-year growth rate of 0.0% per year. For the roads connecting to NC 146, the average growth rates are 6.3% (20 year) and 8.3% (10 year).
   a. Do you agree with the growth patterns described?
      Yes
   b. What growth patterns have you noticed?
      None
   c. Would you expect the growth rate to change substantially in the next 20 years?
      Not from what is currently occurring
   d. Do you expect the growth rate to increase in the future? If so, by what percent per year?
      No. We don't see an increasing rate of development in the service area that might increase the rate of growth.

Comments completed by William High (and Nathan Pennington) via email – 05/07/2021

2) The traffic forecast will include developing volumes for the average traffic situation. Aside from school being in session and the summer tourist season, are there any noticeable seasonal differences in traffic? Are there specific variations in seasonal visitor traffic to be aware of?
Higher volumes are likely to be present from roughly April or May onto December. Tourist season in the area is really summer and fall. Some of the higher volumes on the corridor, outside of peak commute hours, occur when tourists are going in and out of WNC.

3) According to the North Carolina Office of State Budget and Management (OSBM) the population of Buncombe County was approximately 262,659 in 2019 and is projected to grow by 0.68% per year to around 313,400 in 2045. The population projections for the French Broad River MPO area that are contained within the 2045 MTP show a growth rate of 1.19% per year, with population projected to grow from 247,000 in 2015 to 353,000 in 2045.
    a. Do you think that the 0.68% to 1.19% population growth rate is reasonable for the project study area or do you think it will be higher or lower?
    I have no compelling reason to argue for a higher or lower growth rate.
    b. Do you know of any other population projections for this area that may be helpful as we review the growth in the area?
    No

4) The latest version of the FBRMPO Travel Demand Model shows that between 2015 and 2045, I-26 has a growth rate of roughly 1.7% per year. NC 191 shows a growth rate of approximately 1.0% per year south of the I-26 interchange and 3.2% per year north of the interchange. NC 146 shows a growth rate of approximately 1.9% per year. For the roads connecting to NC 191 and NC 146, the model shows growth rates of around 1.9% per year.
    a. Do you think that these traffic growth rates are reasonable for the project study area or do you think they will be higher or lower?
    Uncertain. I would highly encourage exploring older traffic forecasts and compare them to observed patterns.

5) The 2045 MTP includes the following projects in the vicinity of the forecast.
    - MTP ID HS4502 (STIP I-4700) – I-26 Widening from NC 280 to I-40
    - MTP ID HR4514 (STIP I-4400) – I-26 Widening from US 25 to NC 280
    - MTP ID HS4506 (STIP I-2513C) – I-26/I-40/I-240 interchange improvement
    - MTP ID HR4501 (STIP I-2513A) – I-26/I-240 Widening from I-40 to Haywood Rd
    - MTP ID HR4505 (STIP I-2513B) – I-26 Connector from Haywood Rd to Broadway
    - MTP ID HR4507 (STIP U-3403B) – NC 191 Widening from Ledbetter Rd to North of Blue Ridge Parkway
    - MTP ID HR4515 (STIP U-3403A) – NC 191 Widening from NC 146 to NC 280
    - MTP ID HD134510 (STIP U-6047) - NC 112 (Sand Hill/Sardis) Widening from NC 191 to US 19/23

    a. What affect, if any, do you believe this project will have on the traffic volumes in the study area?
    A small increase in volumes

    b. Do you know of any reasonably foreseeable transportation projects that are not identified above that may affect traffic volumes in the traffic forecast study area?
    No

6) There are existing forecasts for STIP projects I-4400/I-4700, I-2513, U-6047, and U-3403 that cover portions of the same study area as this forecast. Are you aware of any other previous traffic forecasts that were performed in or near the study area?

Comments completed by William High (and Nathan Pennington) via email – 05/07/2021

No

7) A preliminary review of data on municipal and county websites found current development information for Buncombe County (https://www.buncombecounty.org/governing/depts/planning/development-projects.aspx). Among the projects listed in the area are:
    - The Farm at Pond Road – 687 DU
    - Busbee at Sweeten Creek – 852 DU
    - MHO, Lakeshore Villas – 120 DU

   Do you know of any specific ongoing or planned developments in the vicinity of the traffic forecast area of which we should be made especially aware? And if so, could you provide information on those developments (type, accessibility, size, timeframe, etc)?
   No

8) The proposed project will provide additional access to the Pratt & Whitney manufacturing center that is currently under construction and scheduled for completion in 2022. The proposed plant is anticipated to have 800 employees at a 1 million square foot facility. Are you aware of any projections or have any knowledge of any secondary development that may result due to the new manufacturing center?
   There is a possibility that Biltmore Farms may further devlop their remaining property adjacent to the P&W site.

9) Do you have any additional comments that would be helpful in our development of the traffic forecast?
   Buncombe County owns property on Ferry Road. I would encourage you reach out to Tim Love (Timothy.love@buncombecounty.org) regarding any potential future developments.

10) This questionnaire is being sent to the following individuals:

    i. Steve Cannon, Division 13, Division Project Development Engineer (slcannon@ncdot.gov)
    ii. Brendan Merithew, Division 13 Project Team Lead (bemerithew@ncdot.gov)
    iii. H. McCray Coates, Division 13 Division Project Manager (hmcoates@ncdot.gov)
    iv. Anna Henderson, Division 13, Division Traffic Engineer (aghenderson@ncdot.gov)
    v. Christopher Medlin, Division 13, District 2 Engineer (cdmedlin@ncdot.gov)
    vi. Pam Cook, NCDOT Transportation Planning Division (Mountains Group) (prcook@ncdot.gov)
    vii. Daniel Sellers, NCDOT Transportation Planning Division (dcsellers1@ncdot.gov)
    viii. Tristan Winkler, FBRMPO, Director (tristan@landofsky.org)
    ix. Nick Kroncke, FBR MPO, Transportation Planner (nick@landofsky.org)
    x. Nathan Pennington, Buncombe County, Planning & Development Director (zoningquestions@buncombecounty.org)
    xi. Ken Putnam, City of Asheville, Transportation Department Director (kputnam@ashevillenc.gov)
    xii. Todd Okolichany, City of Asheville, Planning and Urban Design Director (tokolichany@ashevillenc.gov)
    xiii. Shannon Tuch, City of Asheville Principal Planner (stuch@ashevillenc.gov)
    xiv. Stacy Merten, City of Asheville Principal Long Range Planner (smerten@ashevillenc.gov)
    xv. Stephanie Dahl, City of Asheville Director of Strategic Development (sdahl@ashevillenc.gov)

Comments completed by William High (and Nathan Pennington) via email – 05/07/2021

a. Are there any other individuals whom you think we should contact to discuss this forecast?

From: Henderson, Anna G
To: Lee Klieman
Subject: RE: [External] NCDOT STIP HE-0001 Traffic Forecast Questionnaire
Date: Tuesday, May 11, 2021 10:15:19 AM
Attachments: image001.png

Lee:

Sorry for the delayed response. There is just a lot going on right now. The only comment that I would have is that during tourist season May – Nov, traffic volumes on I-26 swell considerably on Fridays, Saturdays, and Sundays. If you schedule any counts, you will definitely want to capture the weekend traffic data as well.

Thanks!

Anna

Anna G. Henderson, PE
Division Traffic Engineer
Division 13
N. C. Department of Transportation

828 250 3000 office
aghenderson@ncdot.gov

55 Orange Street
Asheville, NC 28801



From: Lee Klieman <Lee@pt-engineering.net>
Sent: Monday, April 26, 2021 3:25 PM
To: Cannon, Steven L <slcannon@ncdot.gov>; bemerithew@ncdot.gov; Coates, McCray <hmcoates@ncdot.gov>; Henderson, Anna G <aghenderson@ncdot.gov>; Medlin, Christopher D <cdmedlin@ncdot.gov>; Cook, Pamela R <prcook@ncdot.gov>; Sellers, Daniel C <dcsellers1@ncdot.gov>; tristan@landofsky.org; Kroncke, Nick <nick@landofsky.org>; zoningquestions@buncombecounty.org; Putnam, Kenneth J <kputnam@ashevillenc.gov>; tokolichany@ashevillenc.gov; stuch@ashevillenc.gov; smerten@ashevillenc.gov; sdahl@ashevillenc.gov
Cc: Peter Trencansky <peter@pt-engineering.net>
Subject: [External] NCDOT STIP HE-0001 Traffic Forecast Questionnaire

CAUTION: External email. Do not click links or open attachments unless you verify. Send all suspicious email as an attachment to Report Spam.

My name is Lee Klieman and my firm, Patriot Transportation Engineering, is in the process of preparing a traffic forecast for NCDOT STIP Project No. HE-0001, which would add an interchange to I-26 (proposed Exit 35) in Buncombe County. During the development of the forecast we utilize numerous resources, one of which is to gain a better understanding of the study area through discussing the project with local planners and engineers. I have attached a brief questionnaire that will help us gain a better understanding of the study area as we prepare the forecast. Besides local knowledge (represented by responses to the questionnaire), several other data sources will be consulted in shaping the forecast, so that engineering judgment will sometimes be necessary in determining the traffic forecast submitted to NCDOT. The questionnaire was written with a variety of questions because it is being sent to a wide variety of people – you should not feel the need to respond to every question.

If you would please review the attached questionnaire, we would greatly appreciate your time in answering these questions. You may answer the questions in text format in the attached file (or simply within an email) and return them to me at: lee@pt-engineering.net. If you would rather discuss the questions over the phone, I will be following up with a phone call next week. Thank you in advance for your time and please let me know if you have any questions. We need a response by **May 7th** in order for any responses to be considered in the forecast development.

Lee Klieman, P.E., PTOE

_____

Patriot Transportation Engineering, PLLC
3008 Anderson Drive
Suite 220
Raleigh, NC 27609

lee@pt-engineering.net
Office: 919.336.9342

Email correspondence to and from this sender is subject to the N.C. Public Records Law and may be disclosed to third parties.

Comments completed by Tristan Winkler via email – 05/21/2021

Patriot Transportation Engineering is currently in the process of developing a traffic forecast for NCDOT STIP Project No. HE-0001, which would add an interchange to I-26 (proposed Exit 35) in Buncombe County. The forecast study area is shown in the following figure (with the approximate location of the proposed interchange marked with the star below):

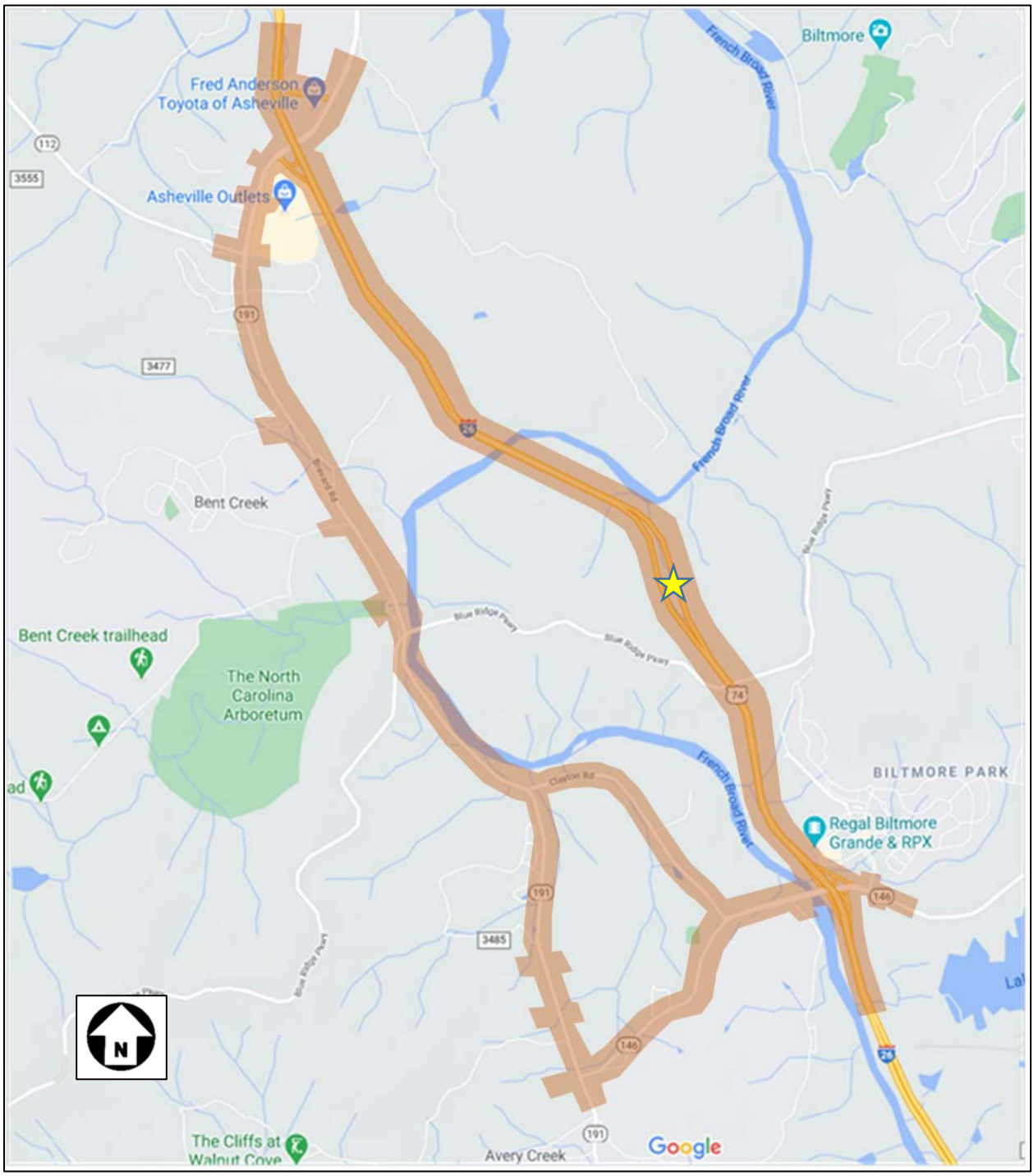

Comments completed by Tristan Winkler via email – 05/21/2021

We have reviewed the French Broad River Metropolitan Planning Organization (FBRMPO) *Metropolitan Transportation Plan 2045* (2045 MTP), and are seeking input from local planners and engineers who are familiar with the area. We have identified you as a local representative. I have listed a few questions below that will help us in the development of the traffic forecast. We would greatly appreciate your time in answering these questions. You may answer the questions in text format below and return them to me at: lee@pt-engineering.net.

If you would rather discuss the questions over the phone, I will be following up with a phone call early next week. Thank you in advance for your time and please let me know if you have any questions.

1) Current and historical traffic trends indicate that the traffic growth over the last 20 years along I-26 in the study area has generally increased overall, although traffic levels appeared to remain mostly stable from 2011 through 2015. Thus, the 10-year growth rates across the study roadway (which include the slower growth) are lower than the 20-year growth rates. The 20-year growth rates on I-26 range from 1.3% to 1.6% per year (and average 1.4%), and the 10-year growth rates range from 0.5% to 1.3% per year (and average 0.8%).

   Current and historical traffic trends on NC 191 (Brevard Rd) show a general increase of traffic, although traffic levels appeared to decline around the year 2007 and from there either remained relatively stable or slowly increased from the 2007 levels. Thus, the 20-year growth rates across NC 191 (which include the traffic decrease) are lower than the more recent 10-year growth rates (which generally feature stable volumes or recovery from the 2007 decrease). The 20-year growth rates on NC 191 range from 0.4% to 2.8% per year (and average 1.8%), and the 10-year growth rates range from -0.8% to 7.6% per year (and average 3.0%). Of note, the 10-year growth rate on NC 191 northeast of I-26 (7.6%), which was widened in 2010, is noticeably higher than the rest of the corridor. Without that portion of NC 191, the corridor's average 10-year growth rate is 2.2%.

   The historic volumes on NC 146 (Long Shoals Rd) in the study area show steady growth throughout the last 20 years. The 20-year growth rates range from 3.7% to 5.8% per year (and average 4.58%), and the 10-year growth rates range from 3.3% to 5.4% per year (and average 4.1%).

   The growth rates on the other roads connecting to the study corridor generally show similar historic trends in accordance with their geographic location within the study area. That is, the roads connecting to NC 191 show slow but steady growth, while the roads connecting to NC 146 show more robust growth rates. The roads connecting to NC 191 have an average 20-year growth rate of 0.9% per year and an average 10-year growth rate of 0.0% per year. For the roads connecting to NC 146, the average growth rates are 6.3% (20 year) and 8.3% (10 year).

   a. Do you agree with the growth patterns described?

Yes, those rates make sense and are in-line with observed patterns.

   b. What growth patterns have you noticed?

Beyond AADT, the distribution of traffic appears to be getting more concentrated in the PM peak as well as specific days (Thursday and Friday afternoons as well as Sunday afternoon for EB I-26 traffic) which tends to be typical of tourist destinations and traffic.

   c. Would you expect the growth rate to change substantially in the next 20 years?

I would not anticipate the AADT growth rate to change substantially in the next 20 years but I would expect a continued redistribution of daily traffic to be redistributed throughout the day.

Comments completed by Tristan Winkler via email – 05/21/2021

d. Do you expect the growth rate to increase in the future? If so, by what percent per year?

No.

2) The traffic forecast will include developing volumes for the average traffic situation. Aside from school being in session and the summer tourist season, are there any noticeable seasonal differences in traffic? Are there specific variations in seasonal visitor traffic to be aware of?

October tends to be the peak, winter tends to have less traffic overall. The tourist peak appears to have elongated from April-ish to November.

3) According to the North Carolina Office of State Budget and Management (OSBM) the population of Buncombe County was approximately 262,659 in 2019 and is projected to grow by 0.68% per year to around 313,400 in 2045. The population projections for the French Broad River MPO area that are contained within the 2045 MTP show a growth rate of 1.19% per year, with population projected to grow from 247,000 in 2015 to 353,000 in 2045.

a. Do you think that the 0.68% to 1.19% population growth rate is reasonable for the project study area or do you think it will be higher or lower?

I would be less surprised if it is higher rather than lower.

b. Do you know of any other population projections for this area that may be helpful as we review the growth in the area?

No.

4) The latest version of the FBRMPO Travel Demand Model shows that between 2015 and 2045, I-26 has a growth rate of roughly 1.7% per year. NC 191 shows a growth rate of approximately 1.0% per year south of the I-26 interchange and 3.2% per year north of the interchange. NC 146 shows a growth rate of approximately 1.9% per year. For the roads connecting to NC 191 and NC 146, the model shows growth rates of around 1.9% per year.

a. Do you think that these traffic growth rates are reasonable for the project study area or do you think they will be higher or lower?

Those rates do not take into account the addition of a new interchange so I would anticipate considerably lower growth rates, especially at NC 191 and NC 146 interchanges. Also, the MPO's model does tend to slightly overestimate interstate travel.

5) The 2045 MTP includes the following projects in the vicinity of the forecast.

- MTP ID HS4502 (STIP I-4700) – I-26 Widening from NC 280 to I-40
- MTP ID HR4514 (STIP I-4400) – I-26 Widening from US 25 to NC 280
- MTP ID HS4506 (STIP I-2513C) – I-26/I-40/I-240 interchange improvement
- MTP ID HR4501 (STIP I-2513A) – I-26/I-240 Widening from I-40 to Haywood Rd
- MTP ID HR4505 (STIP I-2513B) – I-26 Connector from Haywood Rd to Broadway
- MTP ID HR4507 (STIP U-3403B) – NC 191 Widening from Ledbetter Rd to North of Blue Ridge Parkway
- MTP ID HR4515 (STIP U-3403A) – NC 191 Widening from NC 146 to NC 280
- MTP ID HD134510 (STIP U-6047) - NC 112 (Sand Hill/Sardis) Widening from NC 191 to US 19/23

a. What affect, if any, do you believe this project will have on the traffic volumes in the study area?

It will most likely take traffic off of some stretches of I-26 between NC 191 and NC 146 and serve as a "relief" valve for either NC 191, I-26, NC 112, and NC 146 when incidents occur.

Comments completed by Tristan Winkler via email – 05/21/2021

b. Do you know of any reasonably foreseeable transportation projects that are not identified above that may affect traffic volumes in the traffic forecast study area?

No.

6) There are existing forecasts for STIP projects I-4400/I-4700, I-2513, U-6047, and U-3403 that cover portions of the same study area as this forecast. Are you aware of any other previous traffic forecasts that were performed in or near the study area?

No.

7) A preliminary review of data on municipal and county websites found current development information for Buncombe County (https://www.buncombecounty.org/governing/depts/planning/development-projects.aspx). Among the projects listed in the area are:
   - The Farm at Pond Road – 687 DU
   - Busbee at Sweeten Creek – 852 DU
   - MHO, Lakeshore Villas – 120 DU

   Do you know of any specific ongoing or planned developments in the vicinity of the traffic forecast area of which we should be made especially aware? And if so, could you provide information on those developments (type, accessibility, size, timeframe, etc)?

Buncombe County is studying a parcel off of Ferry Road near NC 191.

8) The proposed project will provide additional access to the Pratt & Whitney manufacturing center that is currently under construction and scheduled for completion in 2022. The proposed plant is anticipated to have 800 employees at a 1 million square foot facility. Are you aware of any projections or have any knowledge of any secondary development that may result due to the new manufacturing center?

I would anticipate additional development in the immediate area at some point in the future.

9) Do you have any additional comments that would be helpful in our development of the traffic forecast?

The hourly distribution of traffic in our region is changing pretty rapidly and not just because of the pandemic- this has been observed pre-2020. That should be accounted for when developing peak-hour LOS.

10) This questionnaire is being sent to the following individuals:

i. Steve Cannon, Division 13, Division Project Development Engineer (slcannon@ncdot.gov)
ii. Brendan Merithew, Division 13 Project Team Lead (bemerithew@ncdot.gov)
iii. H. McCray Coates, Division 13 Division Project Manager (hmcoates@ncdot.gov)
iv. Anna Henderson, Division 13, Division Traffic Engineer (aghenderson@ncdot.gov)
v. Christopher Medlin, Division 13, District 2 Engineer (cdmedlin@ncdot.gov)
vi. Pam Cook, NCDOT Transportation Planning Division (Mountains Group) (prcook@ncdot.gov)
vii. Daniel Sellers, NCDOT Transportation Planning Division (dcsellers1@ncdot.gov)
viii. Tristan Winkler, FBRMPO, Director (tristan@landofsky.org)
ix. Nick Kroncke, FBR MPO, Transportation Planner (nick@landofsky.org)
x. Nathan Pennington, Buncombe County, Planning & Development Director (zoningquestions@buncombecounty.org)
xi. Ken Putnam, City of Asheville, Transportation Department Director (kputnam@ashevillenc.gov)

Comments completed by Tristan Winkler via email – 05/21/2021

xii. Todd Okolichany, City of Asheville, Planning and Urban Design Director (tokolichany@ashevillenc.gov)
xiii. Shannon Tuch, City of Asheville Principal Planner (stuch@ashevillenc.gov)
xiv. Stacy Merten, City of Asheville Principal Long Range Planner (smerten@ashevillenc.gov)
xv. Stephanie Dahl, City of Asheville Director of Strategic Development (sdahl@ashevillenc.gov)

a. Are there any other individuals whom you think we should contact to discuss this forecast?

APPENDIX C:

TRAFFIC FORECAST TABLES

Table C1: 2021 Base Year No-Build Traffic Volumes

Forecast Location	NCDOT Historic Count Data								AADT Exptrapolated to 2021 (1)	Previous Forecasts				Historic Count Data[3]		Project Specific Count Data[4]		Project Specific Count Data - COVID Normalized [5]		2021 No-Build Traffic Forecast
	2012	2013	2014	2015	2016	2017	2018	2019		I-2513 (2015)	U-3403 (2017)	U-6047 (2017)	I-4700 (2018)	TMC	Mainline	TMC	Mainline	TMC	Mainline	
I-26 - North of Brevard Rd (NC 191)	79,000	80,000	86,000	81,000	75,000	84,000	80,500	89,000	86,700	88,200			85,000			77,700 (6)	75,600 (7)	90,100	87,700	**89,000**
I-26 - Brevard Rd (NC 191) to Long Shoals Rd (NC 146)	76,000	78,000	82,000	78,000	75,000	85,000	79,500	86,000	87,000	84,200			82,800			76,500 (6) (6)	75,600 (7)	88,700	87,600	**88,100**
I-26 - South of Long Shoals Rd (NC 146)	72,000	72,000	75,000	72,000	72,000	82,000	75,000	80,000	78,700				79,500		79,700/ 79,500 (2017)/(2018)	74,700 (6)	72,400 (7)	86,600	83,900	**85,700**
Brevard Rd (NC 191) - East of I-26	12,000		13,000		16,000				20,700	20,200			17,000			18,200 (6)		20,500		**20,000**
Brevard Rd (NC 191) - I-26 to Wedgefield Rd										30,600			29,800			27,300 (6) 27,000 (6)		30,800 30,500		**30,700**
Brevard Rd (NC 191) - Wedgefield Rd to Biltmore Outlets Dwy/Ingles Dwy	23,000		22,000		27,000				23,400	29,400			29,000	28,900 (2017)		26,600 (6) 26,700 (6)		30,100 30,100		**30,100**
Brevard Rd (NC 191) - Biltmore Outlets Dwy/Ingles Dwy to Ridgefield Boulevard/Sardis Road (NC 112)												26,000	24,600 23,100	27,300 (2017)		23,000 (6) 22,100 (6)		25,900 24,900		**24,800**
Brevard Rd (NC 191) - Ridgefield Boulevard/Sardis Road (NC 112) to Pole Creasman Road (SR 3479)	18,000		19,000		20,000		20,000		20,600			23,000	21,200	24,100 (2017)	21,000 (2018)	22,500 (6) 20,700 (6)		25,500 23,400		**23,300**
Brevard Rd (NC 191) - Pole Creasman Road (SR 3479) to Bent Creek Baptist Church Dwy/Bent Creek Ranch Road (SR 3484)	12,000		14,000		15,000		19,000		18,400						18,000 (2018)	19,300 (6) 18,600 (6)		21,800 21,000		**21,200**
Brevard Rd (NC 191) - Bent Creek Baptist Church Dwy/Bent Creek Ranch Road (SR 3484) to Blue Ridge Parkway Access											17,200					18,200 (6) 18,200 (6)		20,500 20,500		**20,600**
Brevard Rd (NC 191) - Blue Ridge Parkway Access to Clayton Rd (SR 3501)	12,000		13,000		15,000		16,500		17,900		16,300			16,900 (2019)		16,600 (6) 18,400 (6)		18,700 20,700		**18,900**
Brevard Rd (NC 191) - Clayton Rd (SR 3501) to Borg Warner Drive/Industrial Drive											11,700			12,400 (2019)		12,900 (6) 12,500 (6)		14,600 14,100		**13,000**
Brevard Rd (NC 191) - Borg Warner Drive/Industrial Drive to Park S Blvd (SR 3642)/Commerce Way																12,600 (6) 12,600 (6)		14,200 14,200		**13,300**
Brevard Rd (NC 191) - Park S Blvd (SR 3642)/Commerce Way to Long Shoals Rd (NC 146)/Vista Blvd (SR 3645)	10,000		11,000		12,000		12,000		13,400		11,700			13,200 (2016)		13,400 (6) 14,900 (6)		15,100 16,800		**14,200**
Brevard Rd (NC 191) - South of Long Shoals Rd (NC 146)/Vista Blvd (SR 3645)	11,000		11,000		12,000		12,000		13,000		12,500			13,800 (2016)		15,100 (6)		17,000		**14,600**
Wedgefield Rd - North of Brevard Rd (NC 191)										3,600			3,000	3,200 (2017)		3,800 (6)		4,200		**4,000**
Biltmore Outlets Dwy - East of Brevard Rd (NC191)/Brevard Rd (NC 191)													7,600			5,900 (6)		6,500		**7,000**
Ingles Dwy - West of Brevard Rd (NC191)/Brevard Rd (NC 191)													5,400			4,600 (6)		5,000		**5,100**
Ridgefield Boulevard - East of Brevard Rd (NC 191)												11,200	10,700	11,200 (2017)		6,600 (6)		7,300		**10,000**
Sardis Road (NC 112) - West of Brevard Rd (NC 191)	12,000		12,000		14,000		13,000		13,000			16,000	16,000	16,800 (2017)		15,800 (6)		17,800		**16,900**
Carolina Metal Dwy - East of Brevard Rd (NC 191)																100 (6)		100		**100**
Pole Creasman Road (SR 3479) - West of Brevard Rd (NC 191)	880		970		1,000				1,100							2,300 (6)		2,500		**2,400**
Bent Creek Baptist Church Dwy - East of Brevard Rd (NC 191)																200 (6)		200		**200**
Bent Creek Ranch Road (SR 3484) - West of Brevard Rd (NC 191)											6,200					3,300 (6)		3,600		**3,600**
Clayton Road (SR 3501) - East of Brevard Rd (NC 191)														6,500 (2019)		7,000 (6)		7,700		**7,500**
Clayton Road (SR 3501) - North of Long Shoals Road (NC 146)	4,700		5,900						10,100							9,000 (6)		9,900		**9,300**
Borg Warner Drive - East of Brevard Rd (NC 191)																1,400 (6)		1,500		**2,500**
Industrial Drive - West of Brevard Rd (NC 191)																300 (6)		300		**600**
Park S Blvd (SR 3642) - East of Brevard Rd (NC 191)																1,700 (6)		1,900		**2,200**
Commerce Way - West of Brevard Rd (NC 191)																800 (6)		900		**900**
Blue Ridge Parkway Access - West of Fredrick Law Olmstead Way											3,100					4,100 (6)		4,500		**3,700**
Blue Ridge Parkway Access - Fredrick Law Olmstead Way to Brevard Rd (NC 191)											3,500					5,200 (6) 5,200 (6)		5,700 5,700		**4,700**

Table C1: 2021 Base Year No-Build Traffic Volumes

Forecast Location	NCDOT Historic Count Data								AADT Exptrapolated to 2021 (1)	Previous Forecasts				Historic Count Data[3]		Project Specific Count Data[4]		Project Specific Count Data - COVID Normalized [5]		2021 No-Build Traffic Forecast
	2012	2013	2014	2015	2016	2017	2018	2019		I-2513 (2015)	U-3403 (2017)	U-6047 (2017)	I-4700 (2018)	TMC	Mainline	TMC	Mainline	TMC	Mainline	
Vista Blvd (SR 3645) - West of Brevard Rd (NC 191)											2,800			6,400 (2016)		2,800 (6)		3,000		**4,400**
Long Shoals Road (NC 146) - Brevard Rd (NC 191) to Clayton Road (SR 3501)	8,400		8,700		9,400		9,100		9,700		8,800			6,200 (2016)		10,500 (6) 12,300 (6)		11,900 13,900		**12,000**
Long Shoals Road (NC 146) - Clayton Road (SR 3501) to Ledbetter Rd (SR 3498)																19,900 (6) 20,900 (6)		22,500 23,600		**20,100**
Long Shoals Road (NC 146) - Ledbetter Rd (SR 3498) to I-26	16,000		19,000		22,000		22,000		24,800				22,300	24,200 (2017)	27,400 (2020)	25,200 (6) 24,900 (6)		28,400 28,200		**24,800**
Long Shoals Rd (NC 146) - I-26 to Schenck Parkway/Skyland Inn Drive	30,000		34,000		37,000				45,900				36,000	38,800 (2017) 39,000 (2017)		36,000 (6) 36,300 (6)		40,700 41,000		**38,200**
Long Shoals Road (NC 146) - East of Schenck Parkway/Skyland Inn Drive	27,000		30,000		32,000		32,000		35,900					33,300 (2017)	35,500 (2020)	31,300 (6)		35,300		**33,400**
Ledbetter Rd (SR 3498) - South of Long Shoals Road (NC 146)	3,700		4,000		4,700				5,400							5,200 (6)		5,700		**5,300**
Schenck Parkway - North of Long Shoals Road (NC 146)														18,100 (2017)		15,200 (6)		16,800		**16,800**
Skyland Inn Drive - South of Long Shoals Road (NC 146)														2,100 (2017)		2,700 (6)		2,900		**2,800**
Fredrick Law Olmstead Way - North of Blue Ridge Parkway Access											800					1,800 (6)		2,000		**1,600**

Notes:

(1) Data extrapolated to 2021 based on linear regression of 2009-2019 data

(2) NCDOT Segment AADT estimates from the NCDOT Annual Average Daily Traffic (AADT) Mapping Application (https://ncdot.maps.arcgis.com/home/item.html?id=5f6fe58c1d90482ab9107ccc03026280)

(3) Historic Count data was collected from publicly available resources as another form of comparison. All Historic Counts were converted to AADT based on the NCDOT Traffic Survey Unit ATR Seasonal Factors as described in Section 2.3. The year of the count is listed and the data was not adjusted to 2021.

(4) All Project Specific Counts were converted to AADT based on the NCDOT Traffic Survey Unit ATR Seasonal Factors as described in Section 2.3

(5) Project Specific Counts were collected during a time when the effects of the COVID pandemic were ongoing. The count data was normalized to pre-COVID levels based on the methodology described in Section 2.4

(6) 2021 13-hour Turning Movement Count - factored to 24-hour volumes and adjusted to AADT.

(7) 2021 Project Specific 14-hour Mainline Count - factored to 24-hour volumes and adjusted to AADT.

Table C2: 2021 Base Year No-Build Design Data – Truck Percentages

Forecast Location	Previous Forecast		NCDOT GIS	Historic Count Data (3)		Project Specific Count Data		Selected Base Year NB Value
	Truck Percentage	STIP Project	Truck Percentage	TMC	Mainline	TMC	Mainline	
I-26 - North of Brevard Rd (NC 191)	3 , 8 / 3 , 8	I-4700 / I-2513	3 , 7			4 , 9 (1)	(4 , 10) (2)	**4 , 8**
I-26 - Brevard Rd (NC 191) to Long Shoals Rd (NC 146)	4 , 10 / 3 , 8	I-4700 / I-2513	3 , 7			5 , 10 (1) 5 , 10 (1)	(5 , 9) (2) (5 , 9) (2)	**4 , 8**
I-26 - South of Long Shoals Rd (NC 146)	4 , 10	I-4700	3 , 7		1 , 8 / 3 , 9 (2017)/(2018)	4 , 10 (1)	(4 , 11) (2)	**4 , 8**
Brevard Rd (NC 191) - East of I-26	4 , 2 / 5 , 1	I-4700 / I-2513	5 , 2			5 , 1 (1)		**5 , 2**
Brevard Rd (NC 191) - I-26 to Wedgefield Rd	4 , 2 / 5 , 1	I-4700 / I-2513	4 , 2			4 , 1 (1) 4 , 1 (1)		**4 , 2**
Brevard Rd (NC 191) - Wedgefield Rd to Biltmore Outlets Dwy/Ingles Dwy	4 , 2	I-4700	4 , 2	4 , 1 (2017)		4 , 1 (1) 4 , 2 (1)		**4 , 2**
Brevard Rd (NC 191) - Biltmore Outlets Dwy/Ingles Dwy to Ridgefield Boulevard/Sardis Road (NC 112)	4 , 2 4 , 2 / 3 , 1	I-4700 I-4700 / U-6047	4 , 2	3 , 1 (2017)		4 , 2 (1) 4 , 2 (1)		**4 , 2**
Brevard Rd (NC 191) - Ridgefield Boulevard/Sardis Road (NC 112) to Pole Creasman Road (SR 3479)	4 , 2 / 3 , 1	I-4700 / U-6047	4 , 1	3 , 1 (2017)		4 , 1 (1) 4 , 1 (1)		**4 , 1**
Brevard Rd (NC 191) - Pole Creasman Road (SR 3479) to Bent Creek Baptist Church Dwy/Bent Creek Ranch Road (SR 3484)			4 , 1			5 , 1 (1) 4 , 1 (1)		**4 , 1**
Brevard Rd (NC 191) - Bent Creek Baptist Church Dwy/Bent Creek Ranch Road (SR 3484) to Blue Ridge Parkway Access	4 , 1	U-3403	4 , 1			4 , 1 (1) 5 , 1 (1)		**4 , 1**
Brevard Rd (NC 191) - Blue Ridge Parkway Access to Clayton Rd (SR 3501)	4 , 1	U-3403	4 , 1	4 , 1 (2019)		5 , 1 (1) 6 , 1 (1)		**5 , 1**
Brevard Rd (NC 191) - Clayton Rd (SR 3501) to Borg Warner Drive/Industrial Drive	5 , 2	U-3403	4 , 1	4 , 1 (2019)		6 , 1 (1) 6 , 1 (1)		**6 , 1**
Brevard Rd (NC 191) - Borg Warner Drive/Industrial Drive to Park S Blvd (SR 3642)/Commerce Way			4 , 1			6 , 1 (1) 6 , 1 (1)		**6 , 1**
Brevard Rd (NC 191) - Park S Blvd (SR 3642)/Commerce Way to Long Shoals Rd (NC 146)/Vista Blvd (SR 3645)	5 , 2	U-3403	4 , 1			6 , 1 (1) 6 , 2 (1)		**6 , 1**
Brevard Rd (NC 191) - South of Long Shoals Rd (NC 146)/Vista Blvd (SR 3645)	5 , 2	U-3403	4 , 1			9 , 1 (1)		**7 , 1**
Wedgefield Rd - North of Brevard Rd (NC 191)	3 , 1 / 3 , 1	I-4700 / I-2513		5 , 1 (2017)		5 , 1 (1)		**5 , 1**
Biltmore Outlets Dwy - East of Brevard Rd (NC191)/Brevard Rd (NC 191)	2 , 1	I-4700				2 , 1 (1)		**2 , 1**
Ingles Dwy - West of Brevard Rd (NC191)/Brevard Rd (NC 191)	2 , 1	I-4700				2 , 1 (1)		**2 , 1**
Ridgefield Boulevard - East of Brevard Rd (NC 191)	2 , 1 / 2 , 1	I-4700 / U-6047		1 , 1 (2017)		2 , 1 (1)		**2 , 1**
Sardis Road (NC 112) - West of Brevard Rd (NC 191)	4 , 2 / 3 , 2	I-4700 / U-6047	4 , 2	3 , 2 (2017)		4 , 2 (1)		**4 , 2**
Carolina Metal Dwy - East of Brevard Rd (NC 191)						9 , 0 (1)		**9 , 1**
Pole Creasman Road (SR 3479) - West of Brevard Rd (NC 191)						2 , 0 (1)		**2 , 1**
Bent Creek Baptist Church Dwy - East of Brevard Rd (NC 191)						1 , 0 (1)		**1 , 1**
Bent Creek Ranch Road (SR 3484) - West of Brevard Rd (NC 191)						2 , 0 (1)		**2 , 1**
Clayton Road (SR 3501) - East of Brevard Rd (NC 191)	2 , 1	U-3403		3 , 1 (2019)		4 , 1 (1)		**4 , 1**
Clayton Road (SR 3501) - North of Long Shoals Road (NC 146)						4 , 1 (1)		**4 , 1**
Borg Warner Drive - East of Brevard Rd (NC 191)						4 , 5 (1)		**4 , 5**
Industrial Drive - West of Brevard Rd (NC 191)						10 , 5 (1)		**10 , 5**
Park S Blvd (SR 3642) - East of Brevard Rd (NC 191)						4 , 1 (1)		**4 , 1**
Commerce Way - West of Brevard Rd (NC 191)						6 , 7 (1)		**6 , 7**
Blue Ridge Parkway Access - West of Fredrick Law Olmstead Way	2 , 1	U-3403				1 , 0 (1)		**1 , 0**

Table C2: 2021 Base Year No-Build Design Data – Truck Percentages

Forecast Location	Previous Forecast		NCDOT GIS	Historic Count Data (3)		Project Specific Count Data		Selected Base Year NB Value
	Truck Percentage	STIP Project	Truck Percentage	TMC	Mainline	TMC	Mainline	
Blue Ridge Parkway Access - Fredrick Law Olmstead Way to Brevard Rd (NC 191)	2 , 1	U-3403				1 , 0 (1) 1 , 0 (1)		**1 , 0**
Vista Blvd (SR 3645) - West of Brevard Rd (NC 191)	7 , 2	U-3403				7 , 4 (1)		**7 , 4**
Long Shoals Road (NC 146) - Brevard Rd (NC 191) to Clayton Road (SR 3501)	6 , 3	U-3403	4 , 3			9 , 3 (1) 8 , 2 (1)		**8 , 2**
Long Shoals Road (NC 146) - Clayton Road (SR 3501) to Ledbetter Rd (SR 3498)			4 , 3			6 , 2 (1) 6 , 2 (1)		**6 , 2**
Long Shoals Road (NC 146) - Ledbetter Rd (SR 3498) to I-26	3 , 2	I-4700	4 , 3	3 , 2 (2017)		5 , 1 (1) 5 , 1 (1)		**6 , 2**
Long Shoals Rd (NC 146) - I-26 to Schenck Parkway/Skyland Inn Drive	3 , 1	I-4700	3 , 1	2 , 1 (2017)		4 , 1 (1) 4 , 1 (1)		**3 , 1**
Long Shoals Road (NC 146) - East of Schenck Parkway/Skyland Inn Drive			3 , 1	2 , 1 (2017)		3 , 1 (1)		**3 , 1**
Ledbetter Rd (SR 3498) - South of Long Shoals Road (NC 146)						2 , 1 (1)		**2 , 1**
Schenck Parkway - North of Long Shoals Road (NC 146)				2 , 1 (2017)		5 , 1 (1)		**5 , 1**
Skyland Inn Drive - South of Long Shoals Road (NC 146)				3 , 1 (2017)		4 , 1 (1)		**4 , 1**
Fredrick Law Olmstead Way - North of Blue Ridge Parkway Access	3 , 1	U-3403				1 , 0 (1)		**1 , 0**

Notes:

(1) 2021 13-hour Turning Movement Count

(2) 2021 14-hour Volume, Class Mainline Count

(3) Historic Count data was collected from publicly available resources as another form of comparison with the year of the count listed.

Table C3: 2021 Base Year No-Build Design Data – Directional Distribution

Forecast Location	Previous Forecast			Historic Count Data (3)						Project Specific Count Data				Selected 2021 BY NB Value	
	Directional Distribution		STIP Project	TMC			Mainline			TMC		Mainline			
	AM Peak	PM Peak		AM Peak	PM Peak	Year	AM Peak	PM Peak	Year	AM Peak	PM Peak	AM Peak	PM Peak	AM Peak	PM Peak
I-26 - North of Brevard Rd (NC 191)	55 SB	55 NB / 55 SB	I-4700 / I-2513							53.6 SB	51.1 SB (1)	55.9 SB	50.6 SB (2)	**52.5 SB**	**52.5 SB**
I-26 - Brevard Rd (NC 191) to Long Shoals Rd (NC 146)	55 SB	55 NB / 55 SB	I-4700 / I-2513							51.6 SB 50.4 SB	51.2 SB (1) 52.2 SB (1)	50.7 SB 50.7 SB	50.8 SB (2) 50.8 SB (2)	**52.5 SB**	**52.5 SB**
I-26 - South of Long Shoals Rd (NC 146)	55 NB	55 NB	I-4700				56.9 NB/ 57.1 NB	50.9 SB/ 52.7 SB	(2017)/(2018)	54.4 NB	53.4 SB (1)	53.7 NB	53.6 SB (2)	**55.0 NB**	**52.5 SB**
Brevard Rd (NC 191) - East of I-26	55 EB	55 EB / 55 WB	I-4700 / I-2513							54.3 EB	56.4 EB (1)			**55.0 EB**	**55.0 EB**
Brevard Rd (NC 191) - I-26 to Wedgefield Rd	55 WB	60 EB / 55 WB	I-4700 / I-2513							52.1 WB 51.7 WB	54.4 EB (1) 54.0 EB (1)			**52.5 WB**	**55.0 EB**
Brevard Rd (NC 191) - Wedgefield Rd to Biltmore Outlets Dwy/Ingles Dwy	55 WB/SB	60 EB/NB	I-4700	56.9 WB	58.7 EB	(2017)				52.7 WB 52.6 SB	54.2 EB (1) 54.3 NB (1)			**52.5 WB** **52.5 SB**	**55.0 EB** **55.0 NB**
Brevard Rd (NC 191) - Biltmore Outlets Dwy/Ingles Dwy to Ridgefield Boulevard/Sardis Road (NC 112)	55 SB	60 NB / 60 NB	I-4700 / U-6047	52.3 SB	59.3 NB	(2017)				50.2 NB 51.1 SB	55.6 NB (1) 55.9 NB (1)			**52.5 SB**	**55.0 NB**
Brevard Rd (NC 191) - Ridgefield Boulevard/Sardis Road (NC 112) to Pole Creasman Road (SR 3479)	55 NB	60 NB / 70 NB	I-4700 / U-6047	56.0 NB	57.5 NB	(2017)	50.2 NB	52.6 NB	(2018)	51.1 NB 52.7 NB	56.4 NB (1) 52.7 NB (1)			**52.5 NB**	**55.0 NB**
Brevard Rd (NC 191) - Pole Creasman Road (SR 3479) to Bent Creek Baptist Church Dwy/Bent Creek Ranch Road (SR 3484)							51.5 NB	57.4 NB	(2018)	50.8 NB 50.7 NB	53.3 NB (1) 53.6 NB (1)			**52.5 NB**	**55.0 NB**
Brevard Rd (NC 191) - Bent Creek Baptist Church Dwy/Bent Creek Ranch Road (SR 3484) to Blue Ridge Parkway Access		60 NB	U-3403							50.3 SB 50.1 SB	56.0 NB (1) 58.3 NB (1)			**52.5 NB**	**57.5 NB**
Brevard Rd (NC 191) - Blue Ridge Parkway Access to Clayton Rd (SR 3501)		60 NB	U-3403	50.5 NB	58.0 NB	(2019)				52.1 NB 52.4 NB	56.8 NB (1) 58.4 NB (1)			**52.5 NB**	**57.5 NB**
Brevard Rd (NC 191) - Clayton Rd (SR 3501) to Borg Warner Drive/Industrial Drive		55 NB	U-3403	50.7 NB	60.3 NB	(2019)				52.5 NB 51.7 NB	62.4 NB (1) 60.7 NB (1)			**52.5 NB**	**57.5 NB**
Brevard Rd (NC 191) - Borg Warner Drive/Industrial Drive to Park S Blvd (SR 3642)/Commerce Way										54.0 NB 53.4 NB	58.0 NB (1) 58.6 NB (1)			**55.0 NB**	**57.5 NB**
Brevard Rd (NC 191) - Park S Blvd (SR 3642)/Commerce Way to Long Shoals Rd (NC 146)/Vista Blvd (SR 3645)		55 NB	U-3403	57.1 NB	54.7 NB	(2016)				53.6 NB 57.0 NB	55.9 NB (1) 53.3 NB (1)			**55.0 NB**	**57.5 NB**
Brevard Rd (NC 191) - South of Long Shoals Rd (NC 146)/Vista Blvd (SR 3645)		55 SB	U-3403	60.3 NB	51.7 NB	(2016)				61.1 NB	50.7 SB (1)			**60.0 NB**	**52.5 SB**
Wedgefield Rd - North of Brevard Rd (NC 191)	55 SB	55 SB	I-4700	51.0 SB	56.9 NB	(2017)				57.3 SB	50.7 NB (1)			**57.5 SB**	**52.5 NB**
Biltmore Outlets Dwy - East of Brevard Rd (NC191)/Brevard Rd (NC 191)	60 EB	55 WB	I-4700							60.9 EB	56.1 WB (1)			**60.0 EB**	**55.0 WB**
Ingles Dwy - West of Brevard Rd (NC191)/Brevard Rd (NC 191)	55 WB	60 WB	I-4700							62.0 WB	60.1 WB (1)			**60.0 WB**	**60.0 WB**
Ridgefield Boulevard - East of Brevard Rd (NC 191)	70 EB	70 WB / 60 EB	I-4700 / U-6047	76.2 EB	72.2 WB	(2017)				79.5 EB	73.9 WB (1)			**75.0 EB**	**70.0 WB**
Sardis Road (NC 112) - West of Brevard Rd (NC 191)	55 EB	60 WB / 55 EB	I-4700 / U-6047	59.1 EB	62.7 WB	(2017)				54.0 EB	61.1 WB (1)			**55.0 EB**	**60.0 WB**
Carolina Metal Dwy - East of Brevard Rd (NC 191)										100.0 EB	85.7 WB (1)			**85.0 EB**	**85.0 WB**
Pole Creasman Road (SR 3479) - West of Brevard Rd (NC 191)										71.5 EB	55.5 WB (1)			**70.0 EB**	**55.0 WB**
Bent Creek Baptist Church Dwy - East of Brevard Rd (NC 191)										83.3 EB	57.1 EB (1)			**80.0 EB**	**55.0 EB**
Bent Creek Ranch Road (SR 3484) - West of Brevard Rd (NC 191)										59.0 EB	62.5 WB (1)			**60.0 EB**	**65.0 WB**
Clayton Road (SR 3501) - East of Brevard Rd (NC 191)		55 EB	U-3403	50.1 EB	51.5 WB	(2019)				51.6 WB	50.5 EB (1)			**52.5 WB**	**52.5 WB**
Clayton Road (SR 3501) - North of Long Shoals Road (NC 146)										55.5 SB	50.9 SB (1)			**55.0 SB**	**52.5 NB**
Borg Warner Drive - East of Brevard Rd (NC 191)										73.9 EB	87.0 WB (1)			**75.0 EB**	**85.0 WB**
Industrial Drive - West of Brevard Rd (NC 191)										84.6 WB	57.1 EB (1)			**85.0 WB**	**55.0 EB**
Park S Blvd (SR 3642) - East of Brevard Rd (NC 191)										50.5 WB	52.1 EB (1)			**55.0 WB**	**55.0 EB**
Commerce Way - West of Brevard Rd (NC 191)										81.4 WB	92.9 EB (1)			**80.0 WB**	**90.0 EB**
Blue Ridge Parkway Access - West of Fredrick Law Olmstead Way		60 EB	U-3403							51.9 WB	55.2 EB (1)			**52.5 WB**	**55.0 EB**
Blue Ridge Parkway Access - Fredrick Law Olmstead Way to Brevard Rd (NC 191)		60 EB	U-3403							56.8 WB 64.6 WB	57.2 EB (1) 58.4 EB (1)			**60.0 WB**	**60.0 EB**

Table C3: 2021 Base Year No-Build Design Data – Directional Distribution

Forecast Location	Previous Forecast			Historic Count Data (3)						Project Specific Count Data				Selected 2021 BY NB Value	
	Directional Distribution		STIP Project	TMC			Mainline			TMC		Mainline			
	AM Peak	PM Peak		AM Peak	PM Peak	Year	AM Peak	PM Peak	Year	AM Peak	PM Peak	AM Peak	PM Peak	AM Peak	PM Peak
Vista Blvd (SR 3645) - West of Brevard Rd (NC 191)		85 EB	U-3403	83.1 WB	55.0 WB	(2016)				70.1 WB	77.9 EB (1)			**70.0 WB**	**70.0 EB**
Long Shoals Road (NC 146) - Brevard Rd (NC 191) to Clayton Road (SR 3501)		50 EB	U-3403	72.7 WB	72.3 WB	(2016)				52.0 WB 51.8 WB	51.3 EB (1) 51.9 WB (1)			**52.5 WB**	**52.5 WB**
Long Shoals Road (NC 146) - Clayton Road (SR 3501) to Ledbetter Rd (SR 3498)										51.2 EB 51.8 EB	50.7 WB (1) 50.2 WB (1)			**52.5 EB**	**52.5 WB**
Long Shoals Road (NC 146) - Ledbetter Rd (SR 3498) to I-26	55 EB	55 WB	I-4700	56.9 EB	55.1 WB	(2017)	57.0 EB	55.5 WB	(2020)	55.8 EB 56.4 EB	53.3 WB (1) 52.3 WB (1)			**55.0 EB**	**52.5 WB**
Long Shoals Rd (NC 146) - I-26 to Schenck Parkway/Skyland Inn Drive	65 EB	55 WB	I-4700	61.9 EB 61.8 EB	51.9 WB (2017) 51.8 WB (2017)					63.1 EB 62.7 EB	53.9 WB (1) 53.9 WB (1)			**62.5 EB**	**52.5 WB**
Long Shoals Road (NC 146) - East of Schenck Parkway/Skyland Inn Drive				56.1 EB	51.5 EB	(2017)	60.6 EB	51.7 EB	(2020)	59.7 EB	51.3 WB (1)			**60.0 EB**	**52.5 WB**
Ledbetter Rd (SR 3498) - South of Long Shoals Road (NC 146)										70.1 NB	62.5 SB (1)			**70.0 NB**	**65.0 SB**
Schenck Parkway - North of Long Shoals Road (NC 146)				64.8 NB	55.8 SB	(2017)				58.7 NB	55.9 SB (1)			**60.0 NB**	**55.0 SB**
Skyland Inn Drive - South of Long Shoals Road (NC 146)				63.3 SB	57.8 NB	(2017)				72.7 SB	57.2 NB (1)			**70.0 SB**	**55.0 NB**
Fredrick Law Olmstead Way - North of Blue Ridge Parkway Access		85 SB	U-3403							62.4 NB	58.7 SB (1)			**55.0 NB**	**60.0 SB**

Notes:

(1) 2021 13-hour Turning Movement Count

(2) 2021 14-hour Volume, Class Mainline Count

(3) Historic Count data was collected from publicly available resources as another form of comparison with the year of the count listed.

Table C4: 2021 Base Year No-Build Design Data – Peak Hour Factor

Forecast Location	Previous Forecast			Historic Count Data (3)				Project Specific Count Data				Selected 2021 BY NB Value	
	Peak Hour Factor		STIP Project	TMC		Mainline		TMC		Mainline			
	AM Peak	PM Peak		AM Peak	PM Peak	AM Peak	PM Peak	AM Peak	PM Peak	AM Peak	PM Peak	AM Peak	PM Peak
I-26 - North of Brevard Rd (NC 191)	7	9 / 8	I-4700 / I-2513					7.0	7.3 (1)	6.9	7.5 (2)	**7.5**	**8.5**
I-26 - Brevard Rd (NC 191) to Long Shoals Rd (NC 146)	7	9 / 8	I-4700 / I-2513					7.1 7.3	7.3 (1) 7.2 (1)	7.5 7.5	7.4 (2) 7.4 (2)	**7.5**	**8.5**
I-26 - South of Long Shoals Rd (NC 146)	7	9	I-4700			6.4 / 7.6	7.2 / 8.0 (2017)/(2018)	7.1	7.2 (1)	7.3	7.4 (2)	**7.5**	**8.5**
Brevard Rd (NC 191) - East of I-26	7	9 / 11	I-4700 / I-2513					7.3	8.4 (1)			**7.5**	**8.5**
Brevard Rd (NC 191) - I-26 to Wedgefield Rd	7	9 / 11	I-4700 / I-2513					6.7 6.5	8.4 (1) 8.5 (1)			**7.0**	**8.5**
Brevard Rd (NC 191) - Wedgefield Rd to Biltmore Outlets Dwy/Ingles Dwy	7	9	I-4700	7.9	8.5 (2017)			6.5 6.5	8.5 (1) 8.5 (1)			**7.0**	**8.5**
Brevard Rd (NC 191) - Biltmore Outlets Dwy/Ingles Dwy to Ridgefield Boulevard/Sardis Road (NC 112)	7	9 / 9	I-4700 / U-6047	8.6	8.6 (2017)			7.1 6.9	8.4 (1) 8.6 (1)			**7.0**	**8.5**
Brevard Rd (NC 191) - Ridgefield Boulevard/Sardis Road (NC 112) to Pole Creasman Road (SR 3479)	7	9 / 9	I-4700 / U-6047	8.2	8.7 (2017)	7.3	9.8 (2018)	5.9 6.7	8.7 (1) 8.9 (1)			**7.0**	**9.0**
Brevard Rd (NC 191) - Pole Creasman Road (SR 3479) to Bent Creek Baptist Church Dwy/Bent Creek Ranch Road (SR 3484)						7.2	9.8 (2018)	6.7 6.7	8.9 (1) 9.0 (1)			**7.0**	**9.0**
Brevard Rd (NC 191) - Bent Creek Baptist Church Dwy/Bent Creek Ranch Road (SR 3484) to Blue Ridge Parkway Access		10	U-3403					6.8 6.8	8.8 (1) 8.9 (1)			**7.0**	**9.0**
Brevard Rd (NC 191) - Blue Ridge Parkway Access to Clayton Rd (SR 3501)		10	U-3403	7.9	9.5 (2019)			7.1 7.1	9.0 (1) 8.9 (1)			**7.0**	**9.0**
Brevard Rd (NC 191) - Clayton Rd (SR 3501) to Borg Warner Drive/Industrial Drive		10	U-3403	8.5	9.4 (2019)			7.1 7.1	8.8 (1) 8.7 (1)			**7.0**	**9.0**
Brevard Rd (NC 191) - Borg Warner Drive/Industrial Drive to Park S Blvd (SR 3642)/Commerce Way								7.2 7.2	8.7 (1) 8.7 (1)			**7.5**	**9.0**
Brevard Rd (NC 191) - Park S Blvd (SR 3642)/Commerce Way to Long Shoals Rd (NC 146)/Vista Blvd (SR 3645)		10	U-3403	7.5	9.1 (2016)			8.7 8.6	8.4 (1) 7.9 (1)			**7.5**	**9.0**
Brevard Rd (NC 191) - South of Long Shoals Rd (NC 146)/Vista Blvd (SR 3645)		10	U-3403	8.6	8.3 (2016)			7.6	7.9 (1)			**7.5**	**8.5**
Wedgefield Rd - North of Brevard Rd (NC 191)	7	9	I-4700	7.7	8.4 (2017)			6.7	7.6 (1)			**7.0**	**7.5**
Biltmore Outlets Dwy - East of Brevard Rd (NC191)/Brevard Rd (NC 191)	7	8	I-4700					4.3	7.4 (1)			**5.0**	**7.5**
Ingles Dwy - West of Brevard Rd (NC191)/Brevard Rd (NC 191)	7	8	I-4700					5.0	8.4 (1)			**5.0**	**8.5**
Ridgefield Boulevard - East of Brevard Rd (NC 191)	9	9 / 9	I-4700 / U-6047	9.4	9.3 (2017)			4.4	9.5 (1)			**7.5**	**9.5**
Sardis Road (NC 112) - West of Brevard Rd (NC 191)	7	9 / 9	I-4700 / U-6047	7.6	8.6 (2017)			7.1	8.5 (1)			**7.5**	**8.5**
Carolina Metal Dwy - East of Brevard Rd (NC 191)								7.6	17.8 (1)			**8.0**	**16.0**
Pole Creasman Road (SR 3479) - West of Brevard Rd (NC 191)								6.7	8.5 (1)			**7.0**	**8.5**
Bent Creek Baptist Church Dwy - East of Brevard Rd (NC 191)								3.6	4.2 (1)			**5.0**	**6.0**
Bent Creek Ranch Road (SR 3484) - West of Brevard Rd (NC 191)								5.3	9.7 (1)			**6.0**	**10.0**
Clayton Road (SR 3501) - East of Brevard Rd (NC 191)		10	U-3403	8.5	9.4 (2019)			7.6	8.5 (1)			**8.0**	**9.0**
Clayton Road (SR 3501) - North of Long Shoals Road (NC 146)								7.9	8.2 (1)			**8.0**	**9.0**
Borg Warner Drive - East of Brevard Rd (NC 191)								5.1	5.7 (1)			**7.0**	**7.0**
Industrial Drive - West of Brevard Rd (NC 191)								5.2	2.8 (1)			**7.0**	**6.0**
Park S Blvd (SR 3642) - East of Brevard Rd (NC 191)								29.3	4.3 (1)			**20.0**	**5.0**
Commerce Way - West of Brevard Rd (NC 191)								5.8	9.4 (1)			**6.0**	**9.5**
Blue Ridge Parkway Access - West of Fredrick Law Olmstead Way		11	U-3403					6.5	10.1 (1)			**6.5**	**9.0**
Blue Ridge Parkway Access - Fredrick Law Olmstead Way to Brevard Rd (NC 191)		11	U-3403					6.9 3.8	9.6 (1) 8.7 (1)			**6.5**	**9.0**

Table C4: 2021 Base Year No-Build Design Data – Peak Hour Factor

Forecast Location	Previous Forecast			Historic Count Data (3)				Project Specific Count Data				Selected 2021 BY NB Value	
	Peak Hour Factor		STIP Project	TMC		Mainline		TMC		Mainline			
	AM Peak	PM Peak		AM Peak	PM Peak	AM Peak	PM Peak	AM Peak	PM Peak	AM Peak	PM Peak	AM Peak	PM Peak
Vista Blvd (SR 3645) - West of Brevard Rd (NC 191)		9	U-3403	8.8	9.7 (2016)			9.9	7.4 (1)			**10.0**	**7.5**
Long Shoals Road (NC 146) - Brevard Rd (NC 191) to Clayton Road (SR 3501)		7	U-3403	9.4	7.8 (2016)			8.3 8.4	7.4 (1) 7.4 (1)			**8.5**	**8.5**
Long Shoals Road (NC 146) - Clayton Road (SR 3501) to Ledbetter Rd (SR 3498)								8.2 8.3	7.9 (1) 7.8 (1)			**8.5**	**8.5**
Long Shoals Road (NC 146) - Ledbetter Rd (SR 3498) to I-26	9	9	I-4700	8.8	9.4 (2017)	9.0	9.3 (2020)	8.5 8.3	8.1 (1) 8.0 (1)			**8.5**	**8.5**
Long Shoals Rd (NC 146) - I-26 to Schenck Parkway/Skyland Inn Drive	8	9	I-4700	8.2 8.1	8.5 (2017) 8.4 (2017)			8.3 8.3	7.7 (1) 7.7 (1)			**8.5**	**8.5**
Long Shoals Road (NC 146) - East of Schenck Parkway/Skyland Inn Drive				8.0	8.1 (2017)	8.3	8.7 (2020)	8.3	7.9 (1)			**8.5**	**8.5**
Ledbetter Rd (SR 3498) - South of Long Shoals Road (NC 146)								8.9	9.7 (1)			**9.0**	**10.0**
Schenck Parkway - North of Long Shoals Road (NC 146)				6.9	8.5 (2017)			6.5	7.0 (1)			**7.0**	**8.5**
Skyland Inn Drive - South of Long Shoals Road (NC 146)				9.8	7.8 (2017)			7.5	6.8 (1)			**8.5**	**7.5**
Fredrick Law Olmstead Way - North of Blue Ridge Parkway Access		10	U-3403					8.8	9.4 (1)			**9.0**	**9.0**

Notes:

(1) 2021 13-hour Turning Movement Count

(2) 2021 14-hour Volume, Class Mainline Count

(3) Historic Count data was collected from publicly available resources as another form of comparison with the year of the count listed.

Table C5: Model Validation

Forecast Location	Model 2015		2021 No-Build		FY No-Build Volumes	
	Model Volume	AADT	Interpolated Model [(1)]	Forecast Volume	2045 Model	2045 Forecast
I-26 - North of Brevard Rd (NC 191)	74,710	75,000	81,600	89,000	109,217	118,000
I-26 - Brevard Rd (NC 191) to Long Shoals Rd (NC 146)	65,758	75,000	71,800	88,100	95,921	116,600
I-26 - South of Long Shoals Rd (NC 146)	59,405	72,000	65,600	85,700	90,258	113,400
Brevard Rd (NC 191) - East of I-26	4,166	16,000	5,400	20,000	10,393	30,000
Brevard Rd (NC 191) - I-26 to Wedgefield Rd	23,477		26,200	30,700	37,191	43,800
Brevard Rd (NC 191) - Wedgefield Rd to Biltmore Outlets Dwy/Ingles Dwy	20,888	27,000	23,700	30,100	35,141	43,200
Brevard Rd (NC 191) - Biltmore Outlets Dwy/Ingles Dwy to Ridgefield Boulevard/Sardis Road (NC 112)	9,067		10,100	24,800	14,247	35,400
Brevard Rd (NC 191) - Ridgefield Boulevard/Sardis Road (NC 112) to Carolina Metals Dwy/Pole Creasman Road (SR 3479)	11,167 9,011	20,000	13,200 10,400	23,300	21,472 15,879	35,000
Brevard Rd (NC 191) - Carolina Metals Dwy/Pole Creasman Road (SR 3479) to Bent Creek Baptist Church Dwy/Bent Creek Ranch Road (SR 3484)	9,011 11,982	15,000	10,400 14,100	21,200	15,879 22,802	32,800
Brevard Rd (NC 191) - Bent Creek Baptist Church Dwy/Bent Creek Ranch Road (SR 3484) to Blue Ridge Parkway Access	10,662		12,800	20,600	21,336	31,200
Brevard Rd (NC 191) - Blue Ridge Parkway Access to Clayton Rd (SR 3501)	10,142	15,000	11,900	18,900	18,779	27,200
Brevard Rd (NC 191) - Clayton Rd (SR 3501) to Borg Warner Drive/Industrial Drive	8,927 3,998		9,700 4,200	13,000	12,939 4,865	19,000
Brevard Rd (NC 191) - Borg Warner Drive/Industrial Drive to Park S Blvd (SR 3642)/Commerce Way	3,998		4,200	13,300	4,865	19,400
Brevard Rd (NC 191) - Park S Blvd (SR 3642)/Commerce Way to Long Shoals Rd (NC 146)/Vista Blvd (SR 3645)	7,138	12,000	7,800	14,200	10,607	20,600
Brevard Rd (NC 191) - South of Long Shoals Rd (NC 146)/Vista Blvd (SR 3645)	7,391	12,000	7,800	14,600	9,220	18,400
Wedgefield Rd - North of Brevard Rd (NC 191)	3,890		3,900	4,000	4,040	4,800
Biltmore Outlets Dwy - East of Brevard Rd (NC 191)	11,821		13,600	7,000	20,894	10,800
Ingles Dwy - West of Brevard Rd (NC 191)				5,100		6,000
Ridgefield Boulevard - East of Brevard Rd (NC 191)				10,000		12,800
Sardis Road (NC 112) - West of Brevard Rd (NC 191)	5,619	14,000	6,500	16,900	10,239	25,400
Pole Creasman Road (SR 3479) - West of Brevard Rd (NC 191)		1,000		2,400		3,000
Bent Creek Baptist Church Dwy - East of Brevard Rd (NC 191)				200		300
Bent Creek Ranch Road (SR 3484) - West of Brevard Rd (NC 191)	4,344		4,500	3,600	5,161	4,300
Clayton Rd (SR 3501) - East of Brevard Rd (NC 191)	1,355		2,300	7,500	6,050	12,600
Clayton Road (SR 3501) - North of Long Shoals Road (NC 146)	3,758		4,900	9,300	9,320	16,000
Borg Warner Drive - East of Brevard Rd (NC 191)				2,500		3,000
Industrial Drive - West of Brevard Rd (NC 191)				600		800
Park S Blvd (SR 3642) - East of Brevard Rd (NC 191)				2,200		2,800
Commerce Way - West of Brevard Rd (NC 191)	3,140		3,700	900	5,742	1,200
Blue Ridge Parkway Access - West of Fredrick Law Olmstead Way	568		700	3,700	1,223	5,000
Blue Ridge Parkway Access - Fredrick Law Olmstead Way to Brevard Rd (NC 191)	568		700	4,700	1,223	6,400
Vista Blvd (SR 3645) - West of Brevard Rd (NC 191)				4,400		5,800
Long Shoals Rd (NC 146) - Brevard Rd (NC 191) to Clayton Road (SR 3501)	6,533 8,163	9,400	7,200 8,900	12,000	10,097 11,744	17,200
Long Shoals Road (NC 146) - Clayton Road (SR 3501) to Ledbetter Rd (SR 3498)	11,323 12,438		13,100 14,300	20,100	20,238 21,809	30,600
Long Shoals Road (NC 146) - Ledbetter Rd (SR 3498) to I-26	12,438	22,000	14,300	24,800	21,809	36,200
Long Shoals Rd (NC 146) - I-26 to Schenck Parkway/Skyland Inn Drive	28,811	37,000	31,500	38,200	42,471	51,600
Long Shoals Road (NC 146) - East of Schenck Parkway/Skyland Inn Drive	19,841	32,000	21,700	33,400	28,996	45,000
Ledbetter Rd (SR 3498) - South of Long Shoals Road (NC 146)		4,700		5,300		8,400
Schenck Parkway - North of Long Shoals Road (NC 146)	18,648		22,000	16,800	35,383	30,400
Skyland Inn Drive - South of Long Shoals Road (NC 146)				2,800		3,600
Fredrick Law Olmstead Way - North of Blue Ridge Parkway Access				1,600		2,000

Notes: (1) Interpolated volume between 2015 and 2045 model data

Table C6: 2021 Build Traffic Volumes

Forecast Location	2015 Model Volumes, Daily		Model Diversion Percent	Chosen Diversion Percent	Model Volume Delta	Chosen Volume Delta	2021 Forecast Volumes	
	No-Build	Build					No-Build	Build
I-26 - North of Brevard Rd (NC 191)	78,728	79,728	1.27%	1.69%	1,000	1,500	89,000	**90,500**
I-26 - Brevard Rd (NC 191) to NC 191 Connector	68,875	69,316	0.64%	2.16%	441	1,900	88,100	**90,000**
I-26 - NC 191 Connector to Long Shoals Rd (NC 146)	68,875	71,003	3.09%	2.04%	2,128	1,800	88,100	(2) **89,900**
I-26 - South of Long Shoals Rd (NC 146)	62,021	62,458	0.70%	0.70%	437	600	85,700	**86,300**
Brevard Rd (NC 191) - East of I-26	4,169	4,281	2.69%	2.00%	112	400	20,000	**20,400**
Brevard Rd (NC 191) - I-26 to Wedgefield Rd	23,655	23,038	-2.61%	-16.94%	-617	-5,200	30,700	(2) **25,500**
Brevard Rd (NC 191) - Wedgefield Rd to Biltmore Outlets Dwy/Ingles Dwy	21,157	20,548	-2.88%	-17.61%	-609	-5,300	30,100	(2) **24,800**
Brevard Rd (NC 191) - Biltmore Outlets Dwy/Ingles Dwy to Ridgefield Boulevard/Sardis Road (NC 112)	10,074	10,042	-0.32%	-20.56%	-32	-5,100	24,800	(2) **19,700**
Brevard Rd (NC 191) - Ridgefield Boulevard/Sardis Road (NC 112) to Pole Creasman Road (SR 3479)	12,277	12,627	2.85%	1.72%	350	400	23,300	**23,700**
Brevard Rd (NC 191) - Pole Creasman Road (SR 3479) to Bent Creek Baptist Church Dwy/Bent Creek Ranch Road (SR 3484)	10,128 13,576	10,504 14,509	3.71% 6.87%	7.55%	376 933	1,600	21,200	(2) **22,800**
Brevard Rd (NC 191) - Bent Creek Baptist Church Dwy/Bent Creek Ranch Road (SR 3484) to Blue Ridge Parkway Access	12,217	13,168	7.78%	12.62%	951	2,600	20,600	(2) **23,200**
Brevard Rd (NC 191) - Blue Ridge Parkway Access to Clayton Rd (SR 3501)	11,629	10,550	-9.28%	-3.17%	-1,079	-600	18,900	(2) **18,300**
Brevard Rd (NC 191) - Clayton Rd (SR 3501) to Borg Warner Drive/Industrial Drive	9,997 4,700	10,174 4,749	1.77% 1.04%	1.54%	177 49	200	13,000	**13,200**
Brevard Rd (NC 191) - Borg Warner Drive/Industrial Drive to Park S Blvd (SR 3642)/Commerce Way	4,700	4,749	1.04%	1.50%	49	200	13,300	**13,500**
Brevard Rd (NC 191) - Park S Blvd (SR 3642)/Commerce Way to Long Shoals Rd (NC 146)/Vista Blvd (SR 3645)	7,520	7,547	0.36%	1.41%	27	200	14,200	**14,400**
Brevard Rd (NC 191) - South of Long Shoals Rd (NC 146)/Vista Blvd (SR 3645)	7,995	8,029	0.43%	0.68%	34	100	14,600	**14,700**
Wedgefield Rd - North of Brevard Rd (NC 191)	3,800			2.50%		100	4,000	**4,100**
Biltmore Outlets Dwy - East of Brevard Rd (NC191)/Brevard Rd (NC 191)	11,084			1.43%		100	7,000	**7,100**
Ingles Dwy - West of Brevard Rd (NC191)/Brevard Rd (NC 191)				1.96%		100	5,100	**5,200**
Ridgefield Boulevard - East of Brevard Rd (NC 191)				2.00%		200	10,000	**10,200**
Sardis Road (NC 112) - West of Brevard Rd (NC 191)	6,346	6,588	3.81%	1.78%	242	300	16,900	**17,200**
Carolina Metal Dwy - East of Brevard Rd (NC 191)				0.00%		0	100	**100**
Pole Creasman Road (SR 3479) - West of Brevard Rd (NC 191)				0.00%		0	2,400	**2,400**
Bent Creek Baptist Church Dwy - East of Brevard Rd (NC 191)				0.00%		0	200	**200**
Bent Creek Ranch Road (SR 3484) - West of Brevard Rd (NC 191)	4,330	4,322	-0.18%	0.00%	-8	0	3,600	**3,600**
Clayton Road (SR 3501) - East of Brevard Rd (NC 191)	1,771	514	-70.98%	-10.67%	-1,257	-800	7,500	(2) **6,700**
Clayton Road (SR 3501) - North of Long Shoals Road (NC 146)	3,923	2,553	-34.92%	-9.68%	-1,370	-900	9,300	(2) **8,400**
Borg Warner Drive - East of Brevard Rd (NC 191)				0.00%		0	2,500	**2,500**
Industrial Drive - West of Brevard Rd (NC 191)				0.00%		0	600	**600**
Park S Blvd (SR 3642) - East of Brevard Rd (NC 191)				0.00%		0	2,200	**2,200**

Table C6: 2021 Build Traffic Volumes

Forecast Location	2015 Model Volumes, Daily		Model Diversion Percent	Chosen Diversion Percent	Model Volume Delta	Chosen Volume Delta	2021 Forecast Volumes	
	No-Build	Build					No-Build	Build
Commerce Way - West of Brevard Rd (NC 191)	2,820			0.00%		0	900	**900**
Blue Ridge Parkway Access - West of Fredrick Law Olmstead Way	648	664	2.47%	2.70%	16	100	3,700	**3,800**
Blue Ridge Parkway Access - Fredrick Law Olmstead Way to Brevard Rd (NC 191)	648	664	2.47%	2.13%	16	100	4,700	**4,800**
NC 191 Connector - Brevard Rd (NC 191) to Pratt & Whitney Access	0	2,362	n/a	n/a	2,362	7,300		(2) **7,300**
NC 191 Connector - Pratt & Whitney Access to I-26	0	5,298	n/a	n/a	5,298	9,100		(2) **9,100**
Vista Blvd (SR 3645) - West of Brevard Rd (NC 191)				2.27%		100	4,400	**4,500**
Long Shoals Road (NC 146) - Brevard Rd (NC 191) to Clayton Road (SR 3501)	6,115 7,723	6,078 7,691	-0.61% -0.41%	0.00%	-37 -32	0	12,000	**12,000**
Long Shoals Road (NC 146) - Clayton Road (SR 3501) to Ledbetter Rd (SR 3498)	10,989 12,091	9,587 10,683	-12.76% -11.65%	-4.48%	-1,402 -1,408	-900	20,100	(2) **19,200**
Long Shoals Road (NC 146) - Ledbetter Rd (SR 3498) to I-26	12,091	10,683	-11.65%	-3.63%	-1,408	-900	24,800	(2) **23,900**
Long Shoals Rd (NC 146) - I-26 to Schenck Parkway/Skyland Inn Drive	27,807	27,906	0.36%	0.79%	99	300	38,200	**38,500**
Long Shoals Road (NC 146) - East of Schenck Parkway/Skyland Inn Drive	19,398	19,480	0.42%	0.60%	82	200	33,400	**33,600**
Ledbetter Rd (SR 3498) - South of Long Shoals Road (NC 146)				0.00%		0	5,300	**5,300**
Schenck Parkway - North of Long Shoals Road (NC 146)	18,095	18,105	0.06%	0.60%	10	100	16,800	**16,900**
Skyland Inn Drive - South of Long Shoals Road (NC 146)				0.00%		0	2,800	**2,800**
Fredrick Law Olmstead Way - North of Blue Ridge Parkway Access				0.00%		0	1,600	**1,600**
Pratt & Whitney Access - North of NC 191 Connector	0	3,996	n/a	n/a	3,996	4,000		(2) **4,000**

Notes:

(1) Diversion rate and model volumes shown are for a centroid connector that was determined to be representative of the change in volume for the subject roadway

(2) Selected 2021 Build Volumes are based on diversion derived from StreetLight Data O-D data and engineering judgment, see Section 5.2 for further information.

(3) This table was not updated based on the FBRMPO Model v 1.2 and is identical to the table in the June 2021 Forecast

Table C7: 2045 No-Build Traffic Volumes

Forecast Location	Forecast 2021 Base Year NB	Historic Growth Rate		Model Growth Rate [1]	Chosen Growth Rate [1]	Model Volume Delta [2]	Chosen Volume Delta [2]	Future Year No-Build Volumes	
	AADT	2010-2019	2000-2019	2015-2045	2021-2045	2021-2045	2021-2045	2045 Model	2045 Forecast
I-26 - North of Brevard Rd (NC 191)	89,000	0.98%	1.40%	1.27%	1.18%	27,600	29,000	109,217	**118,000**
I-26 - Brevard Rd (NC 191) to Long Shoals Rd (NC 146)	88,100	1.46%	1.65%	1.27%	1.17%	24,100	28,500	95,921	**116,600**
I-26 - South of Long Shoals Rd (NC 146)	85,700	1.12%	1.40%	1.40%	1.17%	24,700	27,700	90,258	**113,400**
Brevard Rd (NC 191) - East of I-26	20,000	7.65%	2.23%	3.09%	1.70%	5,000	10,000	10,393	(4) **30,000**
Brevard Rd (NC 191) - I-26 to Rocky Ridge Rd (SR 3428)	30,700			1.55%	1.49%	11,000	13,100	37,191	**43,800**
Brevard Rd (NC 191) - Rocky Ridge Rd (SR 3428) to Biltmore Outlets Dwy/Ingles Dwy	30,100	-0.80%	0.41%	1.75%	1.52%	11,400	13,100	35,141	**43,200**
Brevard Rd (NC 191) - Biltmore Outlets Dwy/Ingles Dwy to Ridgefield Boulevard/Sardis Road (NC 112)	24,800			1.52%	1.49%	4,100	10,600 (5)	14,247	(4) **35,400**
Brevard Rd (NC 191) - Ridgefield Boulevard/Sardis Road (NC 112) to Pole Creasman Road (SR 3479)	23,300	1.05%	1.49%	2.20%	1.71%	8,200	11,700 (5)	21,472 15,879	(4) **35,000**
Brevard Rd (NC 191) - Pole Creasman Road (SR 3479) to Bent Creek Baptist Church Dwy/Bent Creek Ranch Road (SR 3484)	21,200			1.91%	1.84%	5,500	11,600 (5)	15,879 22,802	(4) **32,800**
Brevard Rd (NC 191) - Bent Creek Baptist Church Dwy/Bent Creek Ranch Road (SR 3484) to Blue Ridge Parkway Access	20,600			2.34%	1.74%	8,500	10,600	21,336	(4) **31,200**
Brevard Rd (NC 191) - Blue Ridge Parkway Access to Clayton Rd (SR 3501)	18,900	4.52%	2.62%	2.07%	1.53%	6,900	8,300	18,779	(4) **27,200**
Brevard Rd (NC 191) - Clayton Rd (SR 3501) to Borg Warner Drive/Industrial Drive	13,000			1.24%	1.59%	3,200	6,000 (5)	12,939 4,865	(4) **19,000**
Brevard Rd (NC 191) - Borg Warner Drive/Industrial Drive to Park S Blvd (SR 3642)/Commerce Way	13,300			0.66%	1.59%	700	6,100 (5)	4,865	(4) **19,400**
Brevard Rd (NC 191) - Park S Blvd (SR 3642)/Commerce Way to Long Shoals Rd (NC 146)/Vista Blvd (SR 3645)	14,200	3.17%	1.83%	1.33%	1.56%	2,800	6,400 (5)	10,607	(4) **20,600**
Brevard Rd (NC 191) - South of Long Shoals Rd (NC 146)/Vista Blvd (SR 3645)	14,600	2.26%	1.10%	0.74%	0.97%	1,500	3,800	9,220	(4) **18,400**
Wedgefield Rd - North of Brevard Rd (NC 191)	4,000			0.13%	0.76%	100	800	4,040	**4,800**
Biltmore Outlets Dwy - East of Brevard Rd (NC191)/Brevard Rd (NC 191)	7,000			1.92%	1.82%	7,300	3,800 (3)	20,894	**10,800**
Ingles Dwy - West of Brevard Rd (NC191)/Brevard Rd (NC 191)	5,100				0.68%		900		**6,000**
Ridgefield Boulevard - East of Brevard Rd (NC 191)	10,000				1.03%		2,800		**12,800**
Sardis Road (NC 112) - West of Brevard Rd (NC 191)	16,900		0.90%	2.02%	1.71%	3,700	8,500	10,239	**25,400**
Carolina Metal Dwy - East of Brevard Rd (NC 191)	100				2.93%		100		**200**
Pole Creasman Road (SR 3479) - West of Brevard Rd (NC 191)	2,400	1.94%	-0.69%		0.93%		600		**3,000**
Bent Creek Baptist Church Dwy - East of Brevard Rd (NC 191)	200				1.70%		100		**300**
Bent Creek Ranch Road (SR 3484) - West of Brevard Rd (NC 191)	3,600			0.58%	0.74%	700	700	5,161	**4,300**
Clayton Road (SR 3501) - East of Brevard Rd (NC 191)	7,500			5.11%	2.19%	3,800	5,100	6,050	**12,600**
Clayton Road (SR 3501) - North of Long Shoals Road (NC 146)	9,300	12.04%	4.13%	3.07%	2.29%	4,400	6,700	9,320	**16,000**
Borg Warner Drive - East of Brevard Rd (NC 191)	2,500				0.76%		500		**3,000**
Industrial Drive - West of Brevard Rd (NC 191)	600				1.21%		200		**800**
Park S Blvd (SR 3642) - East of Brevard Rd (NC 191)	2,200				1.01%		600		**2,800**
Commerce Way - West of Brevard Rd (NC 191)	900			2.03%	1.21%	2,100	300 (3)	5,742	**1,200**
Blue Ridge Parkway Access - West of Fredrick Law Olmstead Way	3,700			2.59%	1.26%	500	1,300	1,223	**5,000**
Blue Ridge Parkway Access - Fredrick Law Olmstead Way to Brevard Rd (NC 191)	4,700			2.59%	1.29%	500	1,700	1,223	**6,400**
NC 191 Connector - Brevard Rd (NC 191) to Pratt & Whitney Access	0			n/a		10,900	13,800	13,600	**13,800**
Vista Blvd (SR 3645) - West of Brevard Rd (NC 191)	4,400				1.16%		1,400		**5,800**
Long Shoals Road (NC 146) - Brevard Rd (NC 191) to Clayton Road (SR 3501)	12,000	1.59%	1.90%	1.46%	1.51%	2,900	5,200	10,097 11,744	(4) **17,200**

Table C7: 2045 No-Build Traffic Volumes

Forecast Location	Forecast 2021 Base Year NB	Historic Growth Rate		Model Growth Rate [1]	Chosen Growth Rate [1]	Model Volume Delta [2]	Chosen Volume Delta [2]	Future Year No-Build Volumes	
	AADT	2010-2019	2000-2019	2015-2045	2021-2045	2021-2045	2021-2045	2045 Model	2045 Forecast
Long Shoals Road (NC 146) - Clayton Road (SR 3501) to Ledbetter Rd (SR 3498)	20,100			1.95%	1.77%	7,100	10,500	20,238 21,809	(4) **30,600**
Long Shoals Road (NC 146) - Ledbetter Rd (SR 3498) to I-26	24,800	3.64%	3.75%	1.89%	1.59%	7,500	11,400	21,809	(4) **36,200**
Long Shoals Rd (NC 146) - I-26 to Schenck Parkway/Skyland Inn Drive	38,200	5.36%	5.76%	1.30%	1.26%	10,900	13,400	42,471	(4) **51,600**
Long Shoals Road (NC 146) - East of Schenck Parkway/Skyland Inn Drive	33,400	3.33%	3.87%	1.27%	1.25%	7,300	11,600	28,996	(4) **45,000**
Ledbetter Rd (SR 3498) - South of Long Shoals Road (NC 146)	5,300	4.63%	8.49%		1.94%		3,100		**8,400**
Schenck Parkway - North of Long Shoals Road (NC 146)	16,800			2.16%	2.50%	13,400	13,600	35,383	**30,400**
Skyland Inn Drive - South of Long Shoals Road (NC 146)	2,800				1.05%		800		**3,600**
Fredrick Law Olmstead Way - North of Blue Ridge Parkway Access	1,600				0.93%		400		**2,000**
Pratt & Whitney Access - North of NC 191 Connector	0			n/a		0	8,200		**8,200**
Biltmore Park West Access - South of NC 191 Connector	0			n/a			6,800		**6,800**

Notes:

(1) Growth rate shown is the Compound Annual Growth Rate (CAGR).

(2) Volume Delta is the raw change in volume between either the model volumes or the forecast volumes

(3) Growth rate and model volumes shown are for a centroid connector that was determined to be representative of the change in volume for the subject roadway

(4) Selected volume is based on consideration of model growth rate and model volume delta and is based on the model producing volumes that are substantially lower than the historic AADT volumes.

(5) Model volumes shown may be influenced by the location of the centroid connector and volume trends along the corridor were used to determine growth rates along corridor.

Table C8: 2045 Build Traffic Volumes

Forecast Location	2045 Model Volumes, Daily		Model Diversion Percent	Chosen Diversion Percent	Model Volume Delta	Chosen Volume Delta	2045 Forecast Volumes	
	No-Build	Build					No-Build	Build
I-26 - North of Brevard Rd (NC 191)	109,217	109,475	0.24%	0.59%	258	700	118,000	**118,700**
I-26 - Brevard Rd (NC 191) to NC 191 Connector	95,921	98,430	2.62%	6.35%	2,509	7,400	116,600	(2) **124,000**
I-26 - NC 191 Connector to Long Shoals Rd (NC 146)	95,921	102,967	7.35%	5.32%	7,046	6,200	116,600	**122,800**
I-26 - South of Long Shoals Rd (NC 146)	90,258	91,483	1.36%	0.62%	1,225	700	113,400	**114,100**
Brevard Rd (NC 191) - East of I-26	10,393	8,604	-17.21%	0.00%	-1,789	0	30,000	(2) **30,000**
Brevard Rd (NC 191) - I-26 to Rocky Ridge Rd (SR 3428)	37,191	31,973	-14.03%	-29.00%	-5,218	-12,700	43,800	(2) **31,100**
Brevard Rd (NC 191) - Rocky Ridge Rd (SR 3428) to Biltmore Outlets Dwy/Ingles Dwy	35,141	29,897	-14.92%	-29.86%	-5,244	-12,900	43,200	(2) **30,300**
Brevard Rd (NC 191) - Biltmore Outlets Dwy/Ingles Dwy to Ridgefield Boulevard/Sardis Road (NC 112)	14,247	10,058	-29.40%	-36.44%	-4,189	-12,900	35,400	(2) **22,500**
Brevard Rd (NC 191) - Ridgefield Boulevard/Sardis Road (NC 112) to Pole Creasman Road (SR 3479)	21,472 15,879	16,083 10,771	-25.10% -32.17%	-20.29%	-5,389 -5,108	-7,100	35,000	(2) **27,900**
Brevard Rd (NC 191) - Pole Creasman Road (SR 3479) to Bent Creek Baptist Church Dwy/Bent Creek Ranch Road (SR 3484)	15,879 22,802	10,771 19,665	-32.17% -13.76%	-16.77%	-5,108 -3,137	-5,500	32,800	(2) **27,300**
Brevard Rd (NC 191) - Bent Creek Baptist Church Dwy/Bent Creek Ranch Road (SR 3484) to Blue Ridge Parkway Access	21,336	18,153	-14.92%	-13.14%	-3,183	-4,100	31,200	**27,100**
Brevard Rd (NC 191) - Blue Ridge Parkway Access to Clayton Rd (SR 3501)	18,779	12,872	-31.46%	-20.22%	-5,907	-5,500	27,200	**21,700**
Brevard Rd (NC 191) - Clayton Rd (SR 3501) to Borg Warner Drive/Industrial Drive	12,939 4,865	12,149 4,059	-6.11% -16.57%	0.00%	-790 -806	0	19,000	**19,000**
Brevard Rd (NC 191) - Borg Warner Drive/Industrial Drive to Park S Blvd (SR 3642)/Commerce Way	4,865	4,059	-16.57%	0.00%	-806	0	19,400	**19,400**
Brevard Rd (NC 191) - Park S Blvd (SR 3642)/Commerce Way to Long Shoals Rd (NC 146)/Vista Blvd (SR 3645)	10,607	9,714	-8.42%	0.00%	-893	0	20,600	**20,600**
Brevard Rd (NC 191) - South of Long Shoals Rd (NC 146)/Vista Blvd (SR 3645)	9,220	8,291	-10.08%	0.00%	-929	0	18,400	(2) **18,400**
Wedgefield Rd - North of Brevard Rd (NC 191)	4,040	4,070	0.74%	0.00%	30	0	4,800	**4,800**
Biltmore Outlets Dwy - East of Brevard Rd (NC191)/Brevard Rd (NC 191)	20,894	19,839	-5.05%	0.00%	-1,055	0	10,800	**10,800**
Ingles Dwy - West of Brevard Rd (NC191)/Brevard Rd (NC 191)				0.00%		0	6,000	**6,000**
Ridgefield Boulevard - East of Brevard Rd (NC 191)				0.00%		0	12,800	**12,800**
Sardis Road (NC 112) - West of Brevard Rd (NC 191)	10,239	10,432	1.88%	0.00%	193	0	25,400	**25,400**
Carolina Metal Dwy - East of Brevard Rd (NC 191)				0.00%		0	200	**200**
Pole Creasman Road (SR 3479) - West of Brevard Rd (NC 191)				0.00%		0	3,000	**3,000**
Bent Creek Baptist Church Dwy - East of Brevard Rd (NC 191)				0.00%		0	300	**300**
Bent Creek Ranch Road (SR 3484) - West of Brevard Rd (NC 191)	5,161	5,155	-0.12%	0.00% (1)	-6	0	4,300	**4,300**
Clayton Road (SR 3501) - East of Brevard Rd (NC 191)	6,050	933	-84.58%	-43.65%	-5,117	-5,500	12,600	**7,100**
Clayton Road (SR 3501) - North of Long Shoals Road (NC 146)	9,320	4,200	-54.94%	-34.38%	-5,120	-5,500	16,000	**10,500**
Borg Warner Drive - East of Brevard Rd (NC 191)				0.00%		0	3,000	**3,000**
Industrial Drive - West of Brevard Rd (NC 191)				0.00%		0	800	**800**
Park S Blvd (SR 3642) - East of Brevard Rd (NC 191)				0.00%		0	2,800	**2,800**
Commerce Way - West of Brevard Rd (NC 191)	5,742	5,655	-1.52%	0.00%	-87	0	1,200	**1,200**
Blue Ridge Parkway Access - West of Fredrick Law Olmstead Way	1,223	792	-35.24%	0.00%	-431	0	5,000	**5,000**

Table C8: 2045 Build Traffic Volumes

Forecast Location	2045 Model Volumes, Daily		Model Diversion Percent	Chosen Diversion Percent	Model Volume Delta	Chosen Volume Delta	2045 Forecast Volumes	
	No-Build	Build					No-Build	Build
Blue Ridge Parkway Access - Fredrick Law Olmstead Way to Brevard Rd (NC 191)	1,223	792	-35.24%	0.00%	-431	0	6,400	**6,400**
NC 191 Connector - Brevard Rd (NC 191) to Pratt & Whitney Access	13,600	6,333	-53.43%	-8.70%	-7,267	-1,200	13,800	(2) **12,600**
NC 191 Connector - Pratt & Whitney Access to I-26		14,431			0	18,600	0	(2) **18,600**
Vista Blvd (SR 3645) - West of Brevard Rd (NC 191)				0.00%		0	5,800	**5,800**
Long Shoals Road (NC 146) - Brevard Rd (NC 191) to Clayton Road (SR 3501)	10,097 11,744	9,887 11,503	-2.08% -2.05%	0.00%	-210 -241	0	17,200	**17,200**
Long Shoals Road (NC 146) - Clayton Road (SR 3501) to Ledbetter Rd (SR 3498)	20,238 21,809	14,993 16,542	-25.92% -24.15%	-17.97%	-5,245 -5,267	-5,500	30,600	**25,100**
Long Shoals Road (NC 146) - Ledbetter Rd (SR 3498) to I-26	21,809	16,542	-24.15%	-14.64%	-5,267	-5,300	36,200	**30,900**
Long Shoals Rd (NC 146) - I-26 to Schenck Parkway/Skyland Inn Drive	42,471	43,525	2.48%	0.00%	1,054	0	51,600	(2) **51,600**
Long Shoals Road (NC 146) - East of Schenck Parkway/Skyland Inn Drive	28,996	29,679	2.36%	0.00%	683	0	45,000	(2) **45,000**
Ledbetter Rd (SR 3498) - South of Long Shoals Road (NC 146)				0.00%		0	8,400	**8,400**
Schenck Parkway - North of Long Shoals Road (NC 146)	35,383	35,612	0.65%	0.00%	229	0	30,400	**30,400**
Skyland Inn Drive - South of Long Shoals Road (NC 146)				0.00%		0	3,600	**3,600**
Fredrick Law Olmstead Way - North of Blue Ridge Parkway Access				0.00%		0	2,000	**2,000**
Pratt & Whitney Access - North of NC 191 Connector	13,600	13,928	2.41%	1.22%	328	100	8,200	**8,300**
Pratt & Whitney Access - South of NC 191 Connector				1.47%		100	6,800	**6,900**

Notes:

(1) Diversion rate and model volumes shown are for a centroid connector that was determined to be representative of the change in volume for the subject roadway

(2) Selected 2045 Build Volumes are based on diversion derived from StreetLight Data O-D data and engineering judgment, see Section 7.2 for further information.

APPENDIX D:

FRENCH BROAD RIVER MPO TRAVEL DEMAND MODEL REVISIONS

The French Broad River MPO Travel Demand Model (provided by NCDOT) was utilized as a tool in the development of the forecast. A thorough review of the model network was made as part of a prior project, I-2513 (proposed improvements to I-40, I-26, and multiple interchange improvements), to determine if the changes in the fiscally constrained 2045 MTP and STIP had been properly represented in the model. This review resulted in multiple revisions to both the 2045 future network and the 2015 base year network. For a complete list of these network revisions, refer to the memo delivered to NCDOT on February 25, 2021. Nearly all these revisions were incorporated into the 2015/2045 French Broad River MPO Travel Demand Model, version 1.1 (released 4/28/21). The discussion below, regarding changes to the model for the HE-0001 traffic forecast, refer to revisions made to the model that was updated for the I-2513 project and is very similar to the v1.1 model.

The study area for the HE-0001 traffic forecast is included the French Broad River MPO Travel Demand Model (FBRMPO TDM). The FBRTDM was developed in TransCAD (version 8 Build 22360) and was calibrated based on a base year of 2015 and has a future year of 2045 with no intermediate years.

The study area is located in the central area of the model and has good connectivity, with the model including all of the major roadways (I-26, NC 191 (Brevard Road), and NC 146 (Long Shoals Road)), and several of the minor y-line roadways. However, the model travel analysis zones (TAZs) in the study area are large and often feature single centroid connections to the model network. To improve the model results in the vicinity of the study area, a number of revisions were made to the TAZ structure and centroid loading.

The most notable alteration to the TAZ structure was to create a new TAZ by splitting an existing TAZ. The area of proposed development (and current construction) is within existing TAZ 243. TAZ 243 covers 6.95 square miles, and stretches from Amboy Road/Meadow Road, north of I-40, on the northside to Blue Ridge Parkway and NC 191 (Brevard Road), west of I-26, on the southside. The TAZ covers the entirety of the Biltmore Estate, with the existing centroid loading connecting only at the Biltmore Estate Drive intersection with US 25, which is the entrance to Biltmore, at the northeast corner of the TAZ. The area of proposed development is within the southwest area of the TAZ, west of I-26. Therefore, TAZ 243 was split along the alignment of I-26 to provide a more accurate representation of the land development pattern and to allow for more appropriate vehicle loading. The new TAZ ID is 652. The existing socio-economic data, including the households, employment, and yearly visitors were kept with TAZ 243. Any revisions to the socio-economic data were made only to TAZ 652. The centroid loading for new TAZ 652 was connected to a newly coded connector road that was connected to NC 191 (Brevard Road) at the Blue Ridge Parkway access intersection. The original TAZ geography and network loading is shown in Figure D-1. The updated TAZ geography and network loading is shown in Figure D-2.

Related to the creation of the new TAZ, which obviously involved revisions to the TAZ geographic database, the socio-economic data file, and the highway network, the creation of the new TAZ also necessitated revisions to the External Travel Matrix file (2015_EE.mtx), the External ADT Forecast file (external_awdt_forecast.csv), and the Blank Zonal Matrix file (Dummy.mtx).

Further changes to the model are listed below. Again, all described modifications are in reference to the model as updated for use for the I-2513 project. All described No-Build modifications were applied to both the No-Build and Build scenarios in the Base Year and Future Year networks. The described Build modifications were only applied to the Build scenarios in the Base Year and Future Year networks.

- No-Build Modifications
    - TAZ 406

        - Split NC 191 (Brevard Road) in the vicinity of commercial driveway access to allow for new loading from TAZ 406
        - Added new centroid connector from TAZ 406 to NC 191 (Brevard Road)
        - Relocated TAZ 406 centroid to allow for more balanced loading
        - The original No-Build network is shown in Figure D-3
        - The updated No-Build network is shown in Figure D-4
    - TAZ 367
        - Relocated TAZ 367 centroid to allow for more balanced loading
        - The original No-Build network is shown in Figure D-5
        - The updated No-Build network is shown in Figure D-6
    - TAZ 241
        - Split NC 191 (Brevard Road) in two places in the vicinity of commercial driveway access points to allow for new loading from TAZ 241
        - Added new centroid connectors from TAZ 241 to NC 191 (Brevard Road)
        - Relocated TAZ 241 centroid to allow for more balanced loading
        - The original No-Build network is shown in Figure D-7
        - The updated No-Build network is shown in Figure D-8
    - TAZ 236
        - Split NC 191 (Brevard Road) in two places in the vicinity of residential access and employment access points to allow for new loading from TAZ 236
        - Added new centroid connectors from TAZ 236 to NC 191 (Brevard Road)
        - Relocated TAZ 236 centroid to allow for more balanced loading
        - The original No-Build network is shown in Figure D-9
        - The updated No-Build network is shown in Figure D-10
    - TAZ 238
        - Relocated TAZ 238 centroid to allow for more balanced loading
        - The original No-Build network is shown in Figure D-11
        - The updated No-Build network is shown in Figure D-12
- Build Modifications
    - Add new interchange to I-26
        - Split I-26 northbound and southbound links to allow for interchange ramp access
        - Add interchange ramps (standard diamond)
    - Add connector road to access interchange
        - Add roadway link from TAZ loading point to connect to new interchange
            - Link was coded as a 4-lane roadway so roadway capacity would not be a factor in vehicle assignment
        - Split connector road to allow for direct centroid loading from TAZ 652
        - Add new centroid connector from TAZ 652 to connector road
        - Removed centroid connector from TAZ 652 to NC 191 (Brevard Road)
    - The HE-0001 No-Build network is shown in Figure D-13
    - The HE-0001 Build network is shown in Figure D-14

Figure D-1: FBRMPO TDM 2015 Network, TAZ 243 Centroid Loading, Original

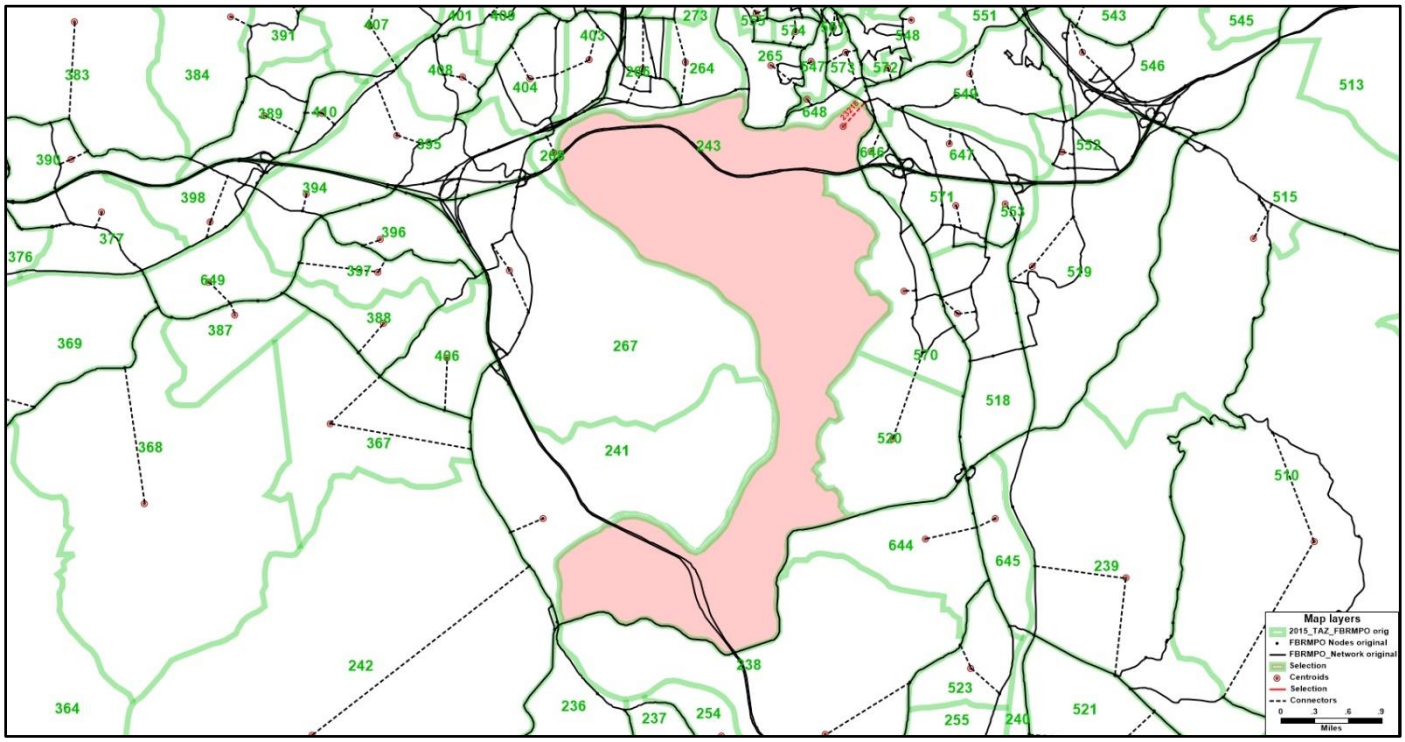

Figure D-2: FBRMPO TDM 2015 Network, TAZ 243/TAZ 652 Centroid Loading, Revised

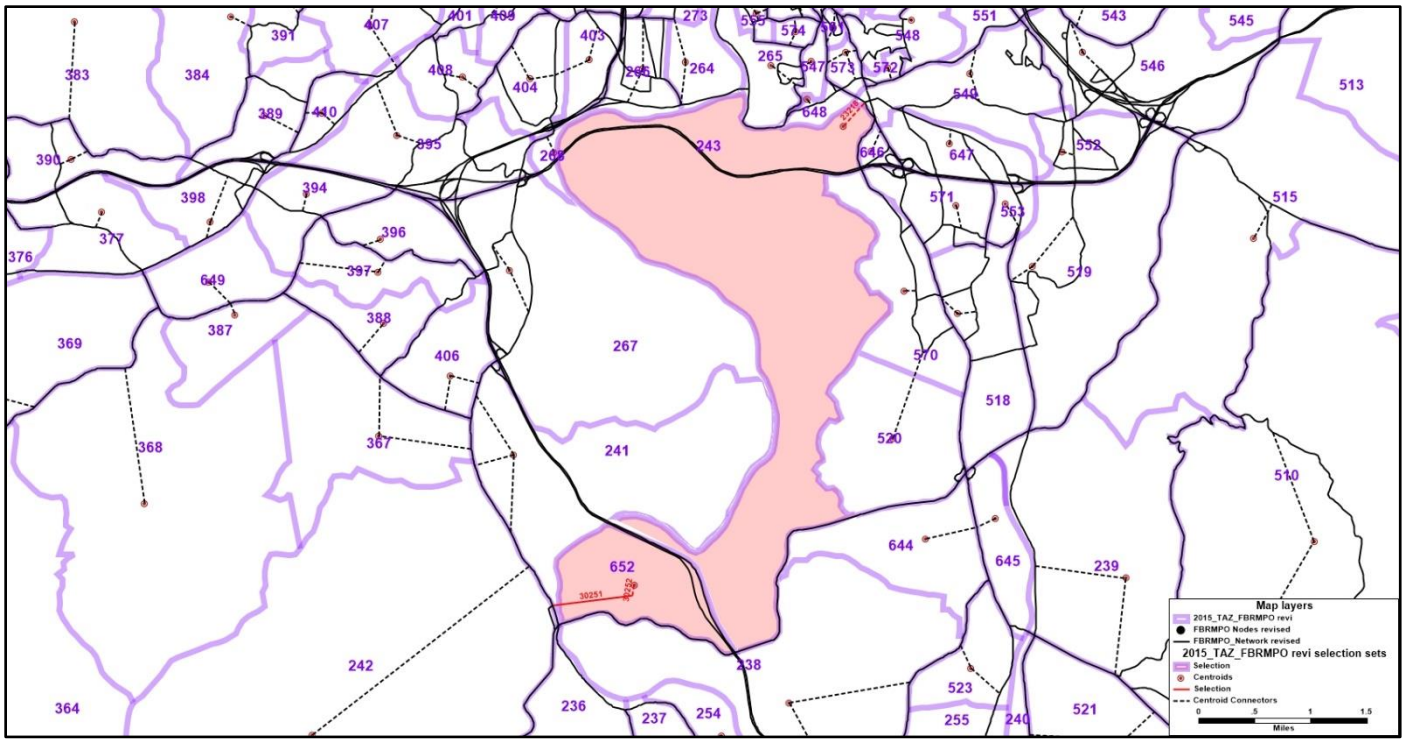

Figure D-3: FBRMPO TDM 2015 Network, TAZ 406 Centroid Loading, Original

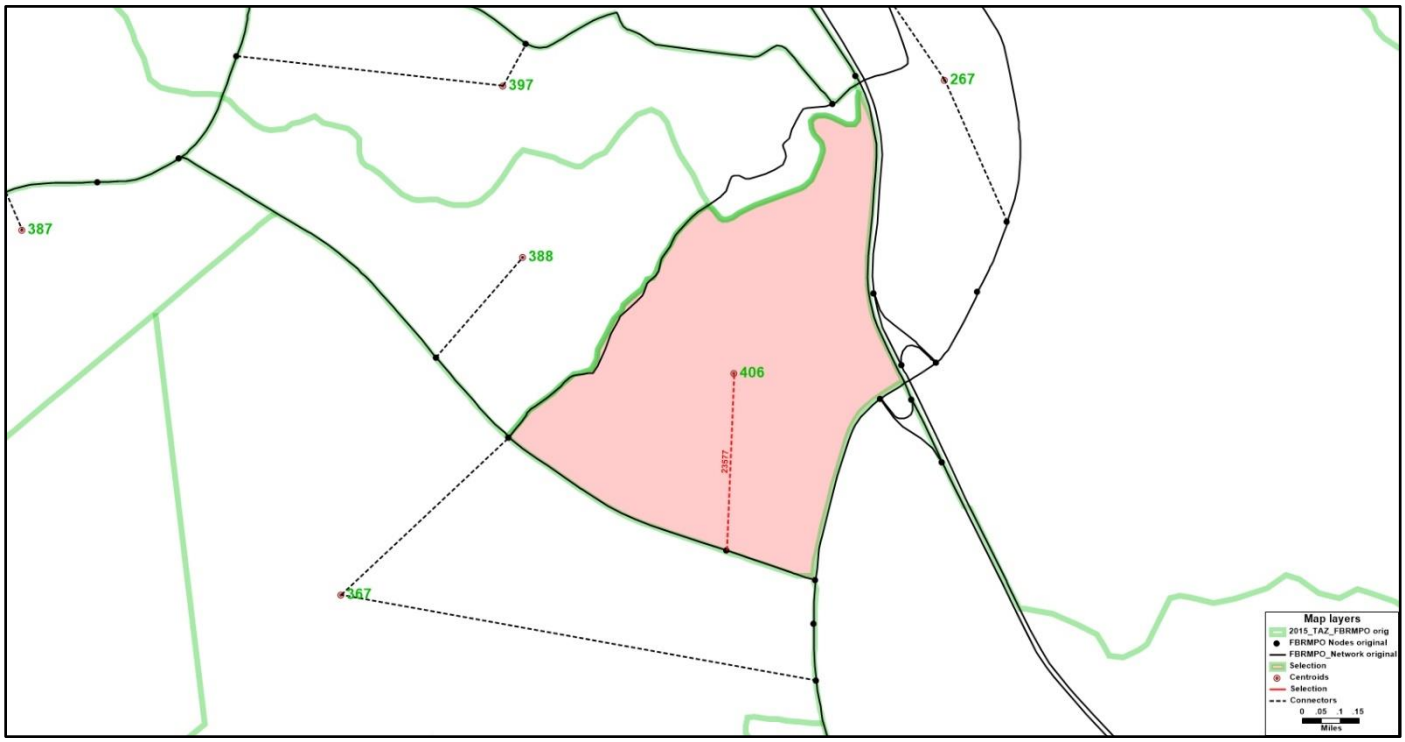

Figure D-4: FBRMPO TDM 2015 Network, TAZ 406 Centroid Loading, Revised

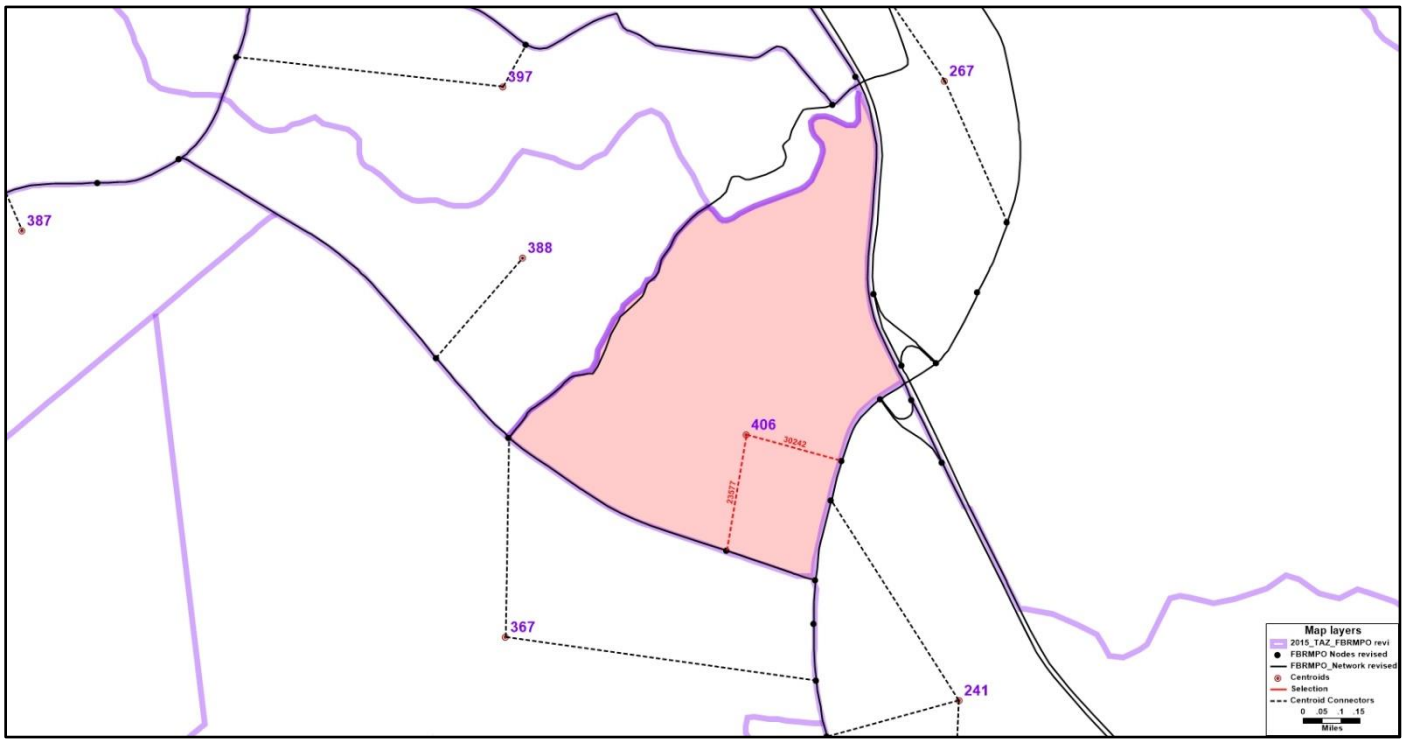

Figure D-5: FBRMPO TDM 2015 Network, TAZ 367 Centroid Loading, Original

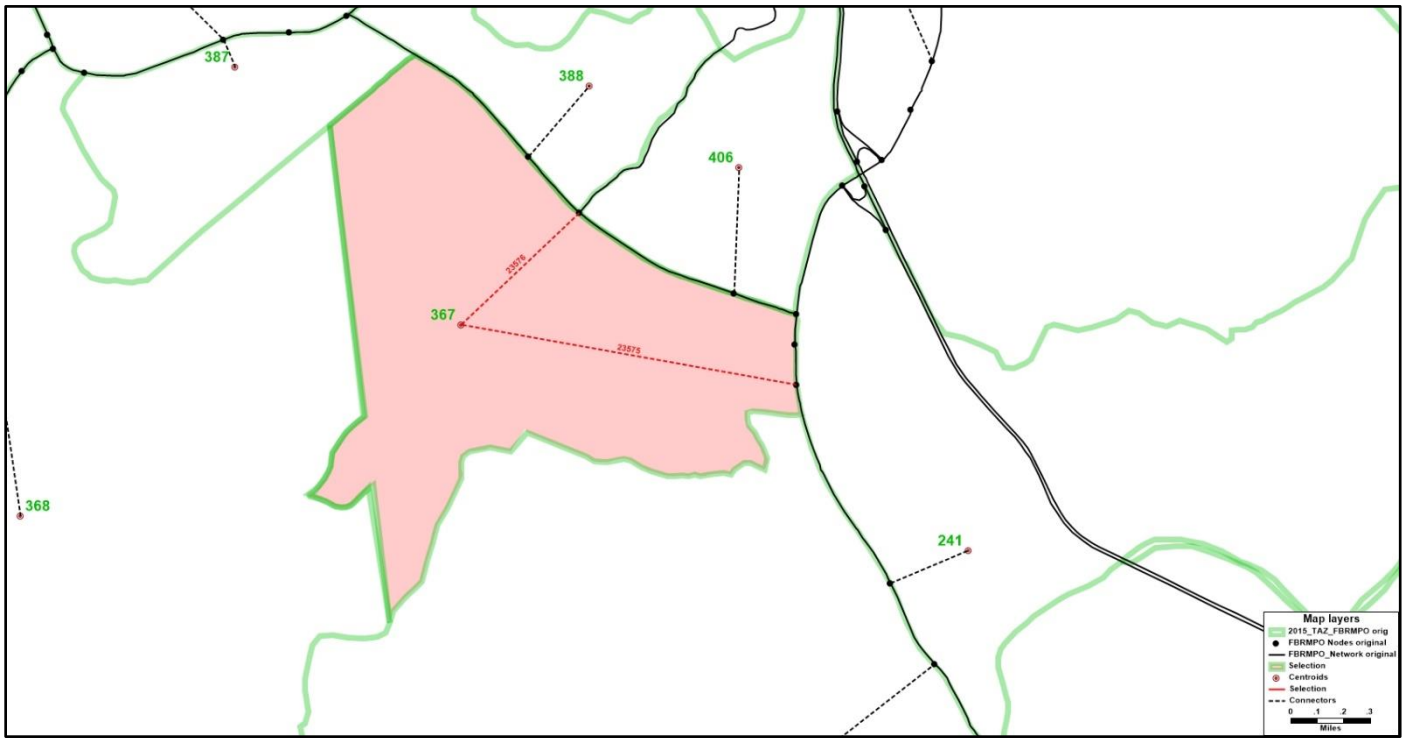

Figure D-6: FBRMPO TDM 2015 Network, TAZ 367 Centroid Loading, Revised

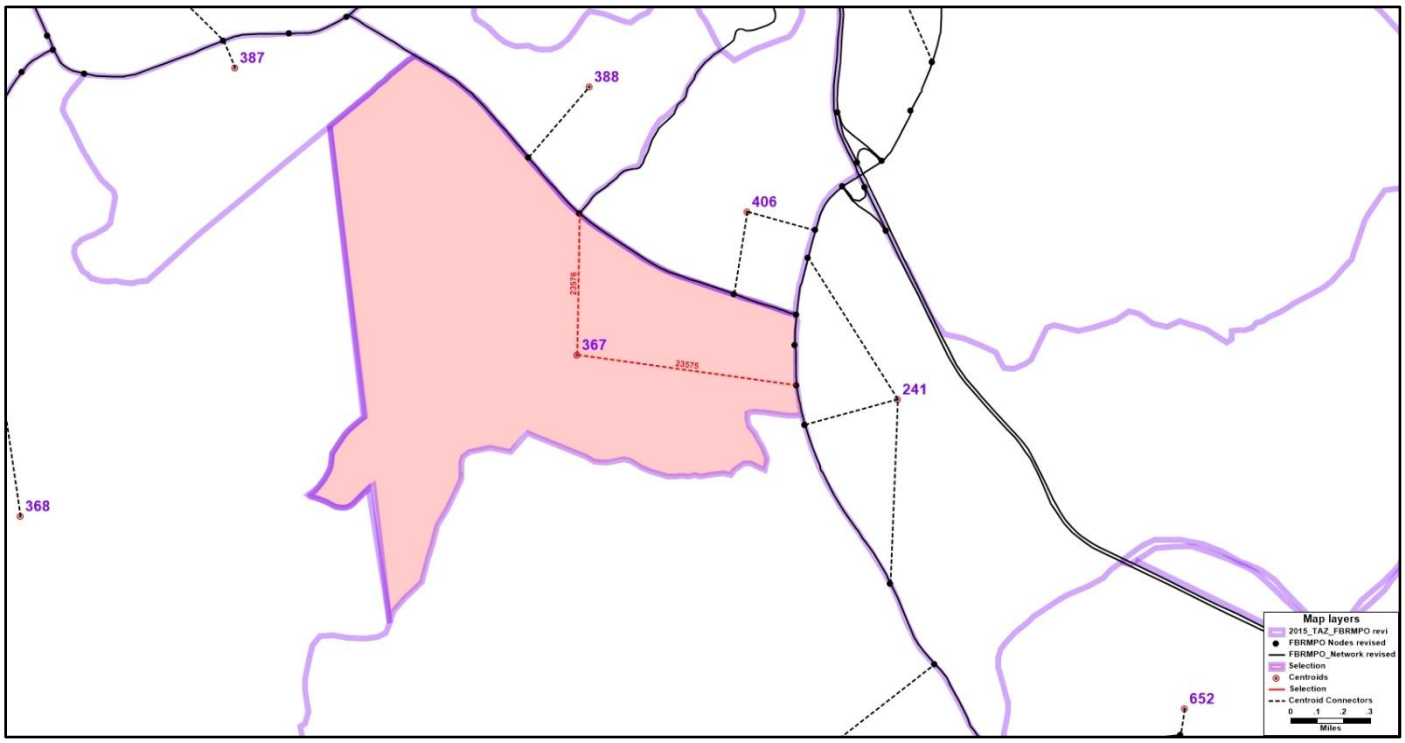

Figure D-7: FBRMPO TDM 2015 Network, TAZ 241 Centroid Loading, Original

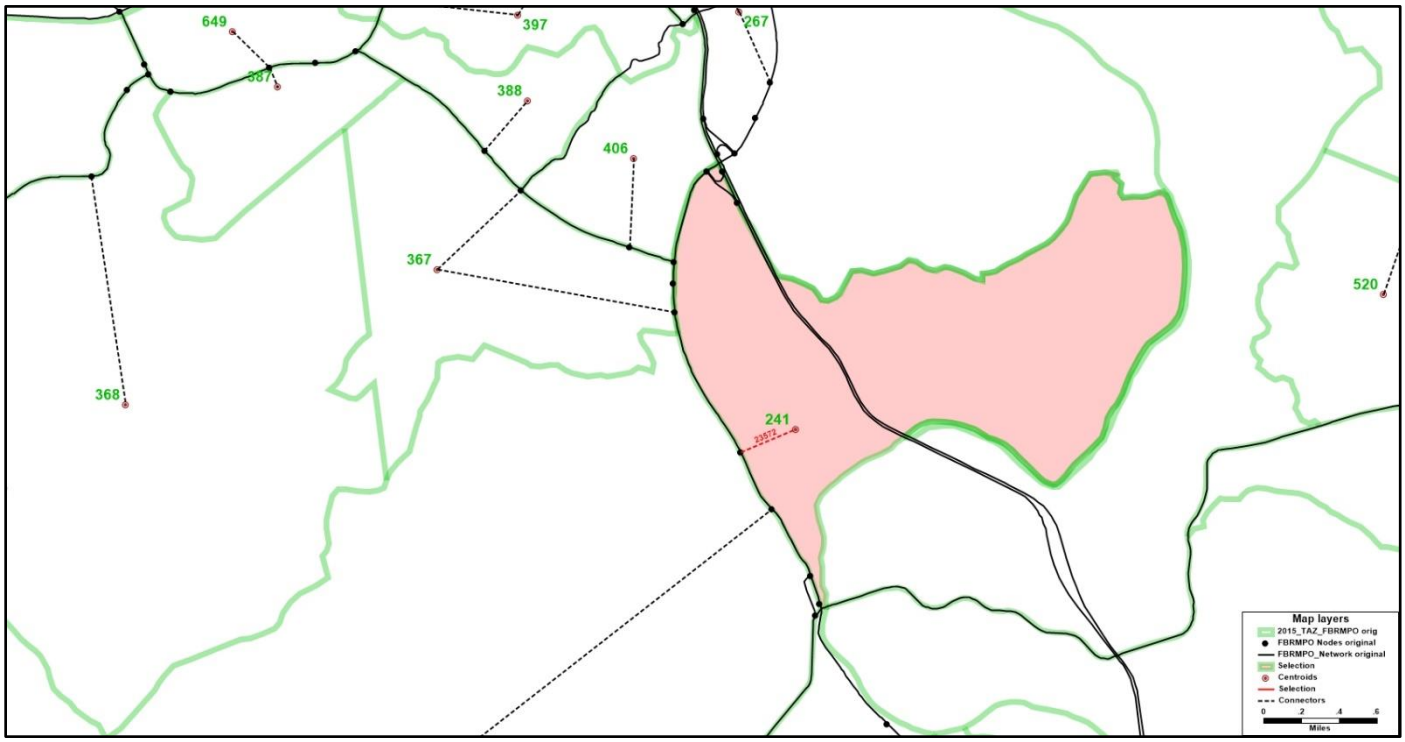

Figure D-8: FBRMPO TDM 2015 Network, TAZ 241 Centroid Loading, Revised

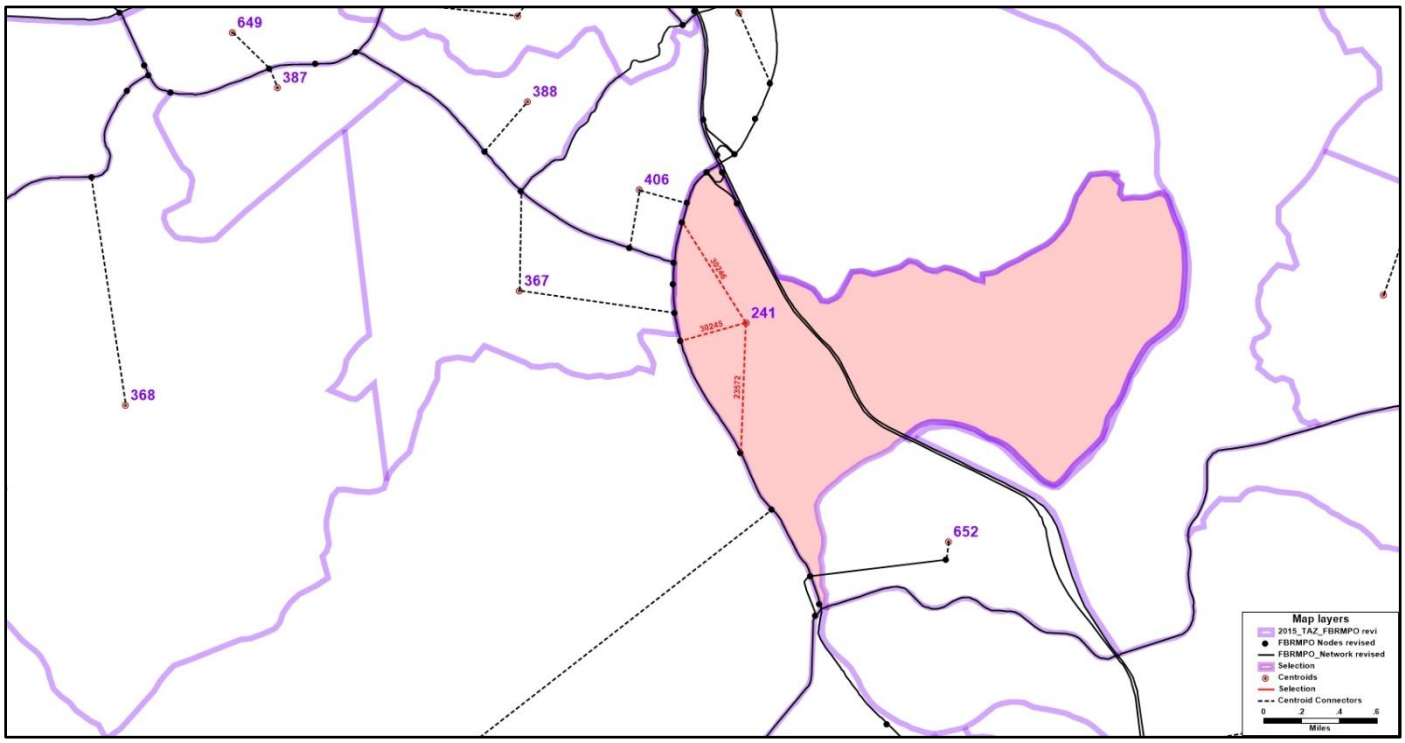

Figure D-9: FBRMPO TDM 2015 Network, TAZ 236 Centroid Loading, Original

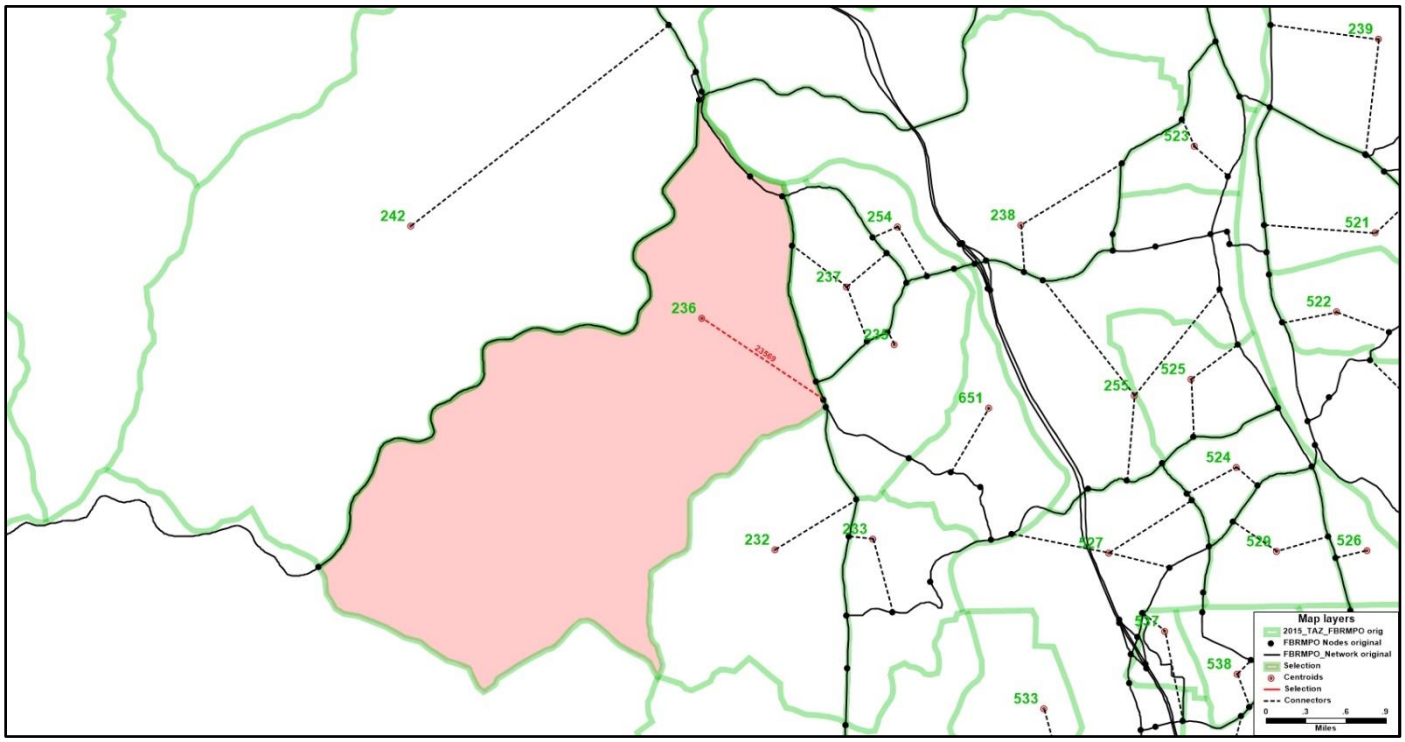

Figure D-10: FBRMPO TDM 2015 Network, TAZ 236 Centroid Loading, Revised

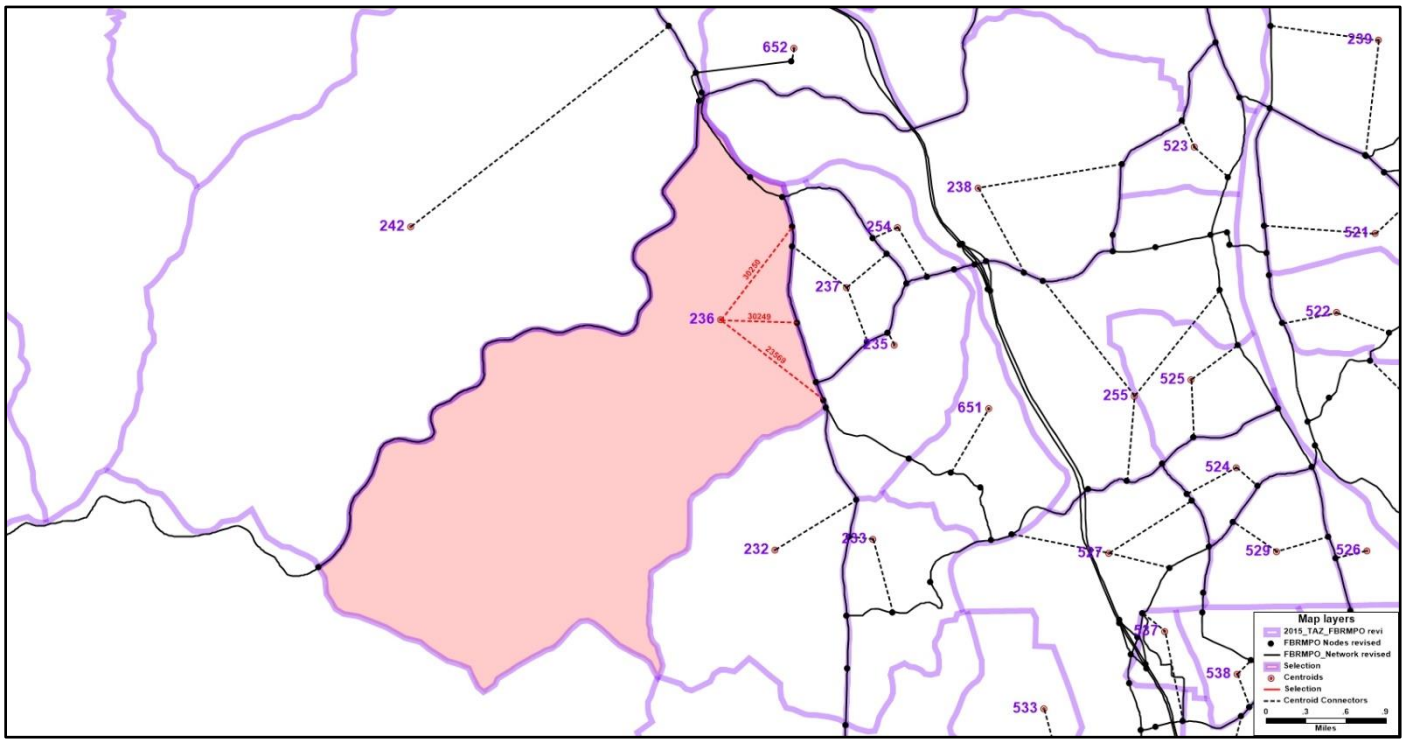

Figure D-11: FBRMPO TDM 2015 Network, TAZ 236 Centroid Loading, Original

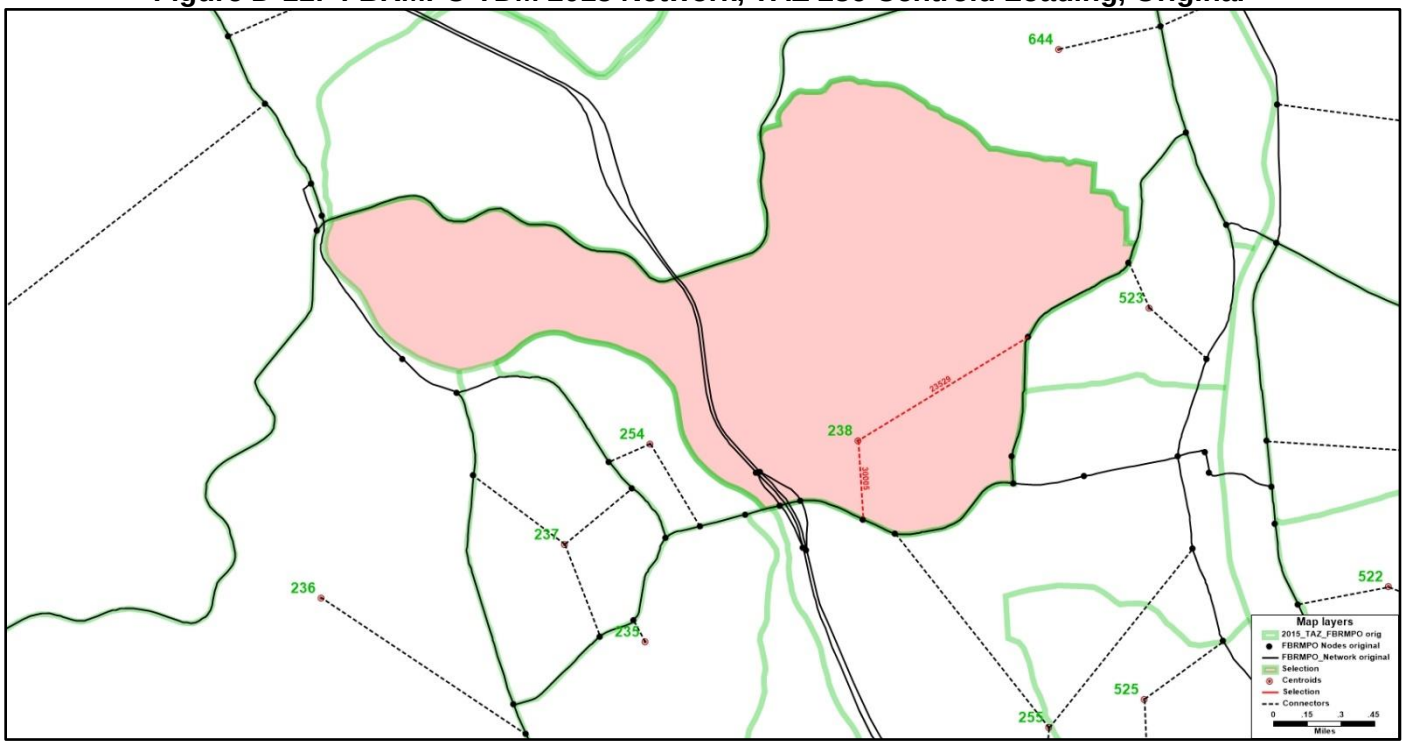

Figure D-12: FBRMPO TDM 2015 Network, TAZ 238 Centroid Loading, Revised

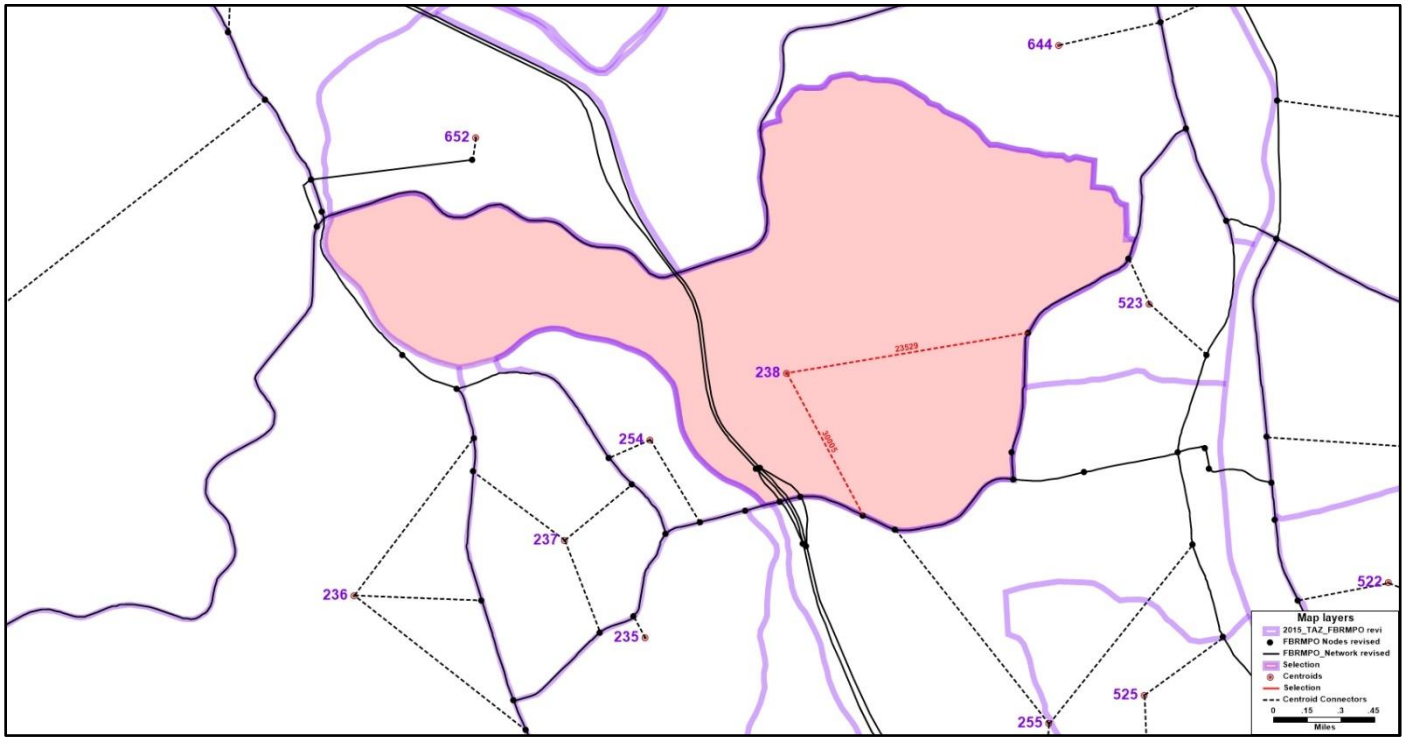

Figure D-13: FBRMPO TDM No-Build Network, Study Area

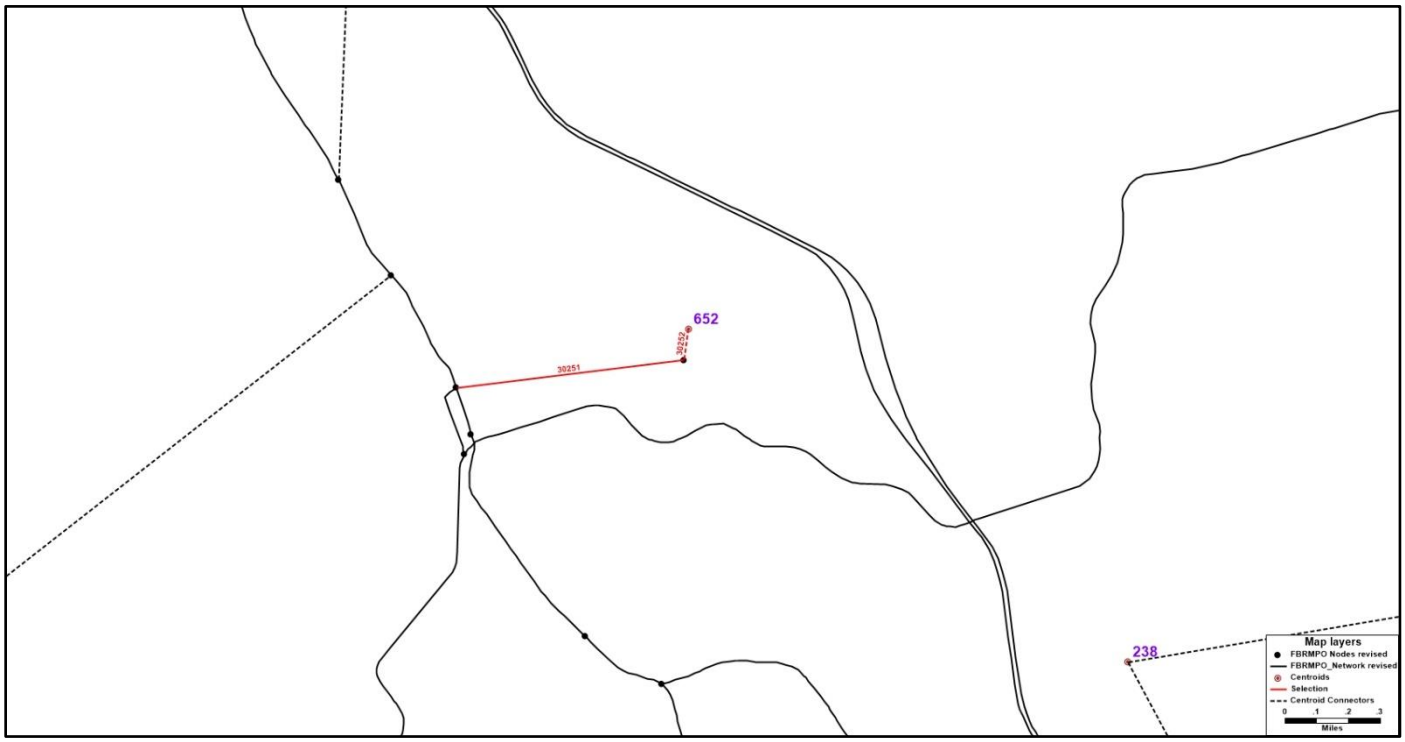

Figure D-14: FBRMPO TDM Build Network, Study Area

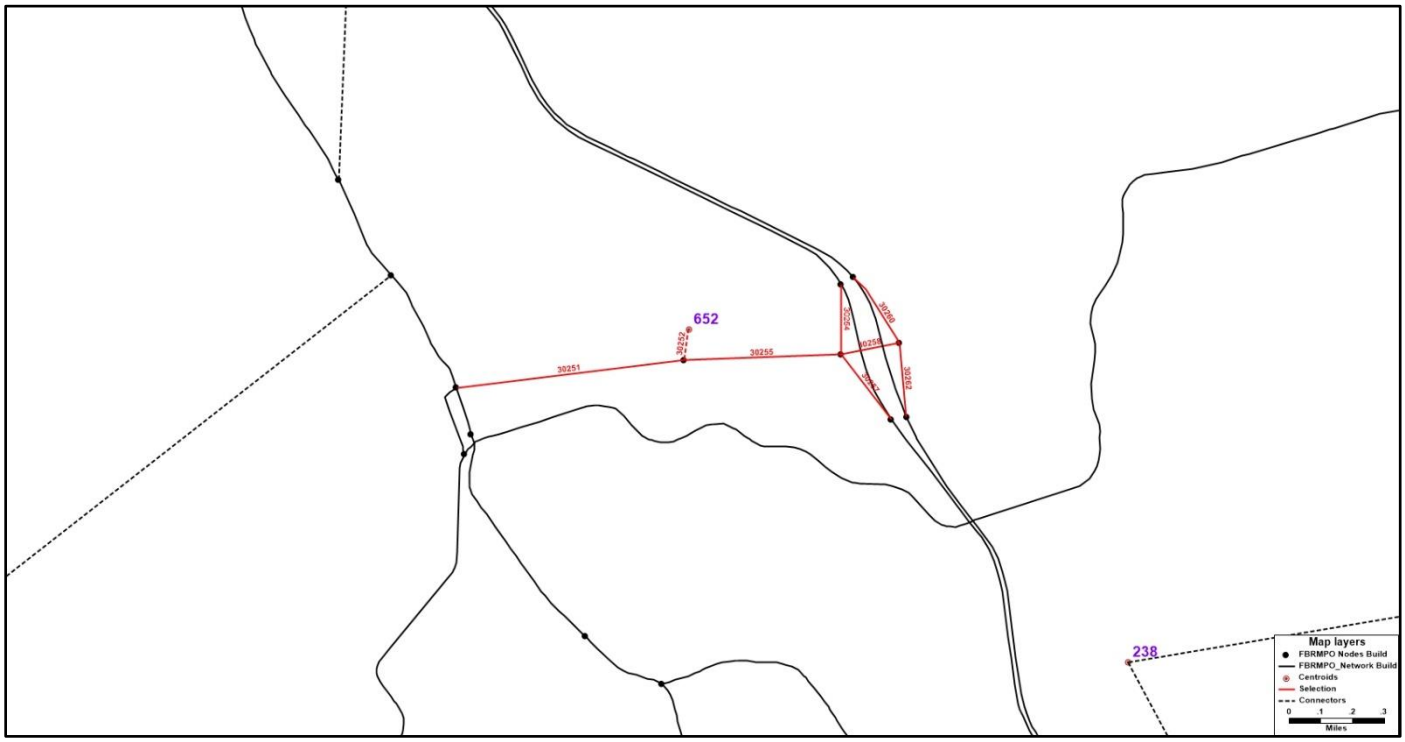

APPENDIX E:

HE-0001 TRAFFIC FORECAST TRIP DIVERSION FIGURES

Step 1

Additional trips for P&W Buildout

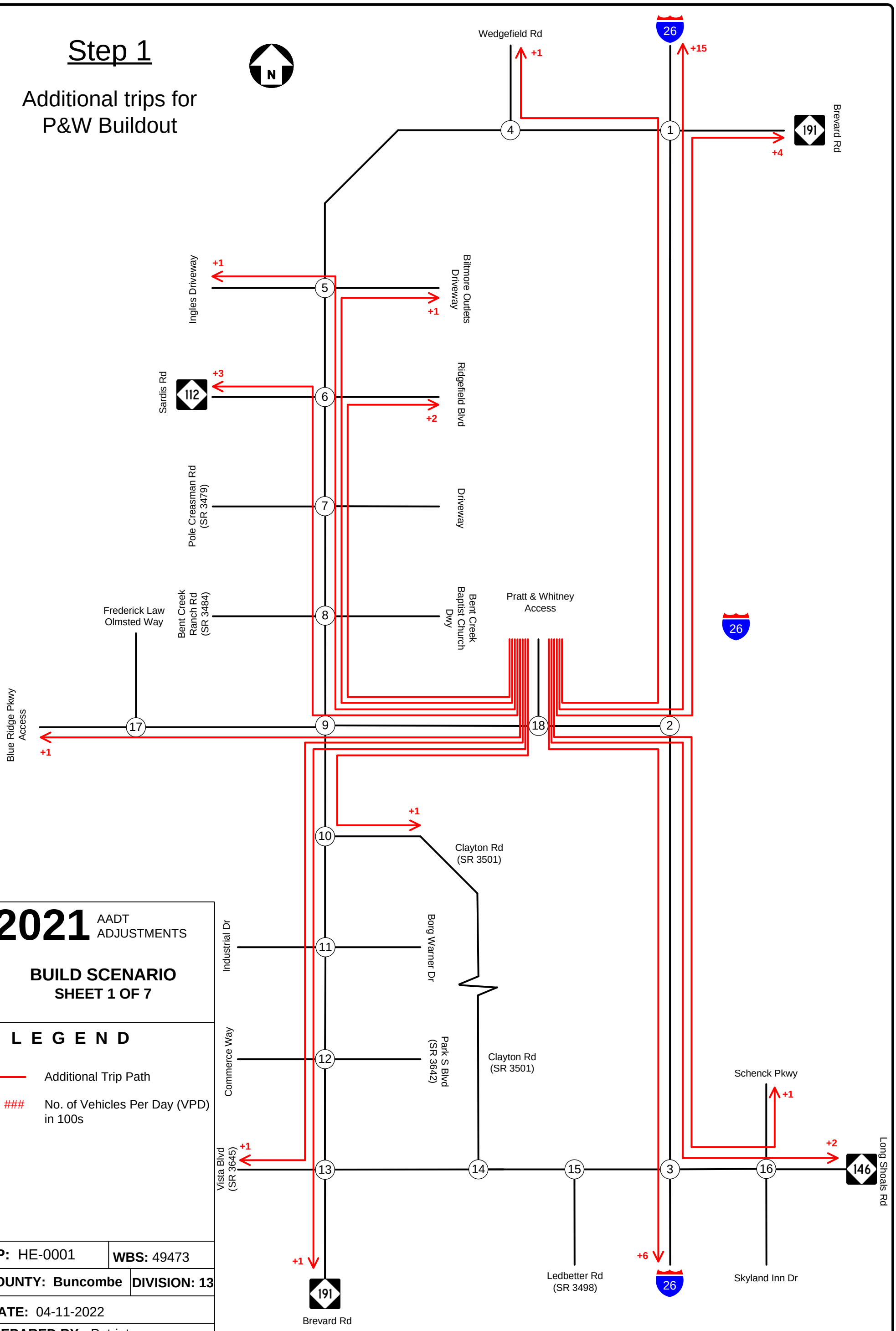

2021 AADT ADJUSTMENTS

BUILD SCENARIO
SHEET 1 OF 7

L E G E N D

Additional Trip Path

No. of Vehicles Per Day (VPD) in 100s

TIP: HE-0001	**WBS:** 49473
COUNTY: Buncombe	**DIVISION: 13**
DATE: 04-11-2022	
PREPARED BY: Patriot Transportation Engineering, PLLC	
LOCATION: I-26/NC 191 Connector	
PROJECT: I-26 Future Interchange at NC 191 Connector (Exit 35)	

Step 2

I-26 North Diversion

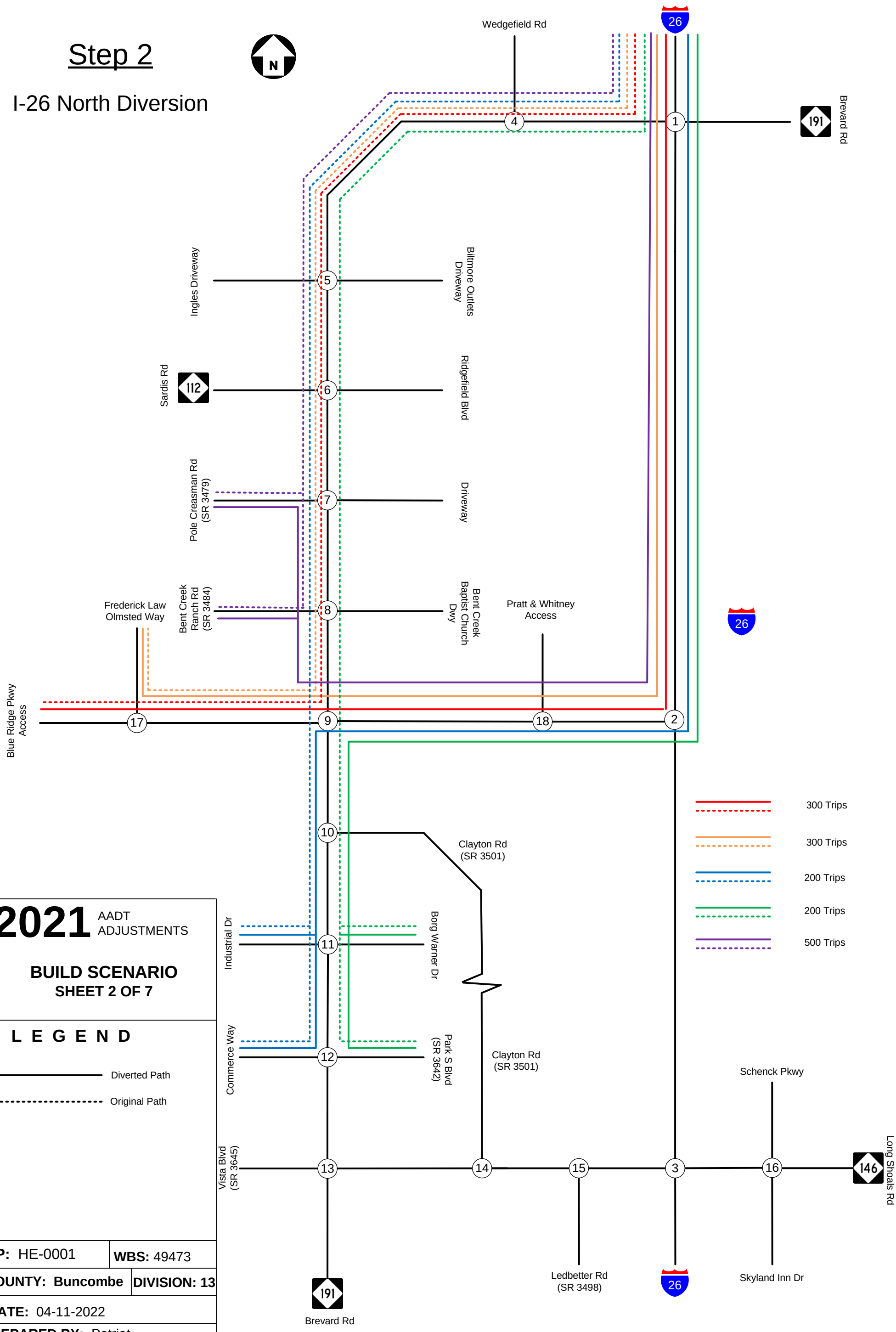

2021 AADT ADJUSTMENTS

BUILD SCENARIO
SHEET 2 OF 7

L E G E N D

Diverted Path

Original Path

TIP: HE-0001 | **WBS:** 49473

COUNTY: Buncombe | **DIVISION: 13**

DATE: 04-11-2022

PREPARED BY: Patriot Transportation Engineering, PLLC

LOCATION: I-26/NC 191 Connector

PROJECT: I-26 Future Interchange at NC 191 Connector (Exit 35)

I-26 North of Brevard Rd - 2021 AADT = 89,000

O-D Pair	% of AADT	Diverted AADT (calculated)	Diverted AADT (selected)
I-26 - North of Brevard Rd (NC 191) to/from Frederick Law Olmsted Way	0.3%	290	**300**
I-26 - North of Brevard Rd (NC 191) to/from Blue Ridge Parkway Access	0.3%	270	**300**
I-26 - North of Brevard Rd (NC 191) to/from Bent Creek Ranch Road/Pole Creasman Road	0.7%	640	**500**
I-26 - North of Brevard Rd (NC 191) to/from Commerce Way/Industrial Drive	0.3%	240	**200**
I-26 - North of Brevard Rd (NC 191) to/from Borg Warner Dr/Park South Blvd	0.2%	220	**200**

Step 3

NC 191 East Diversion

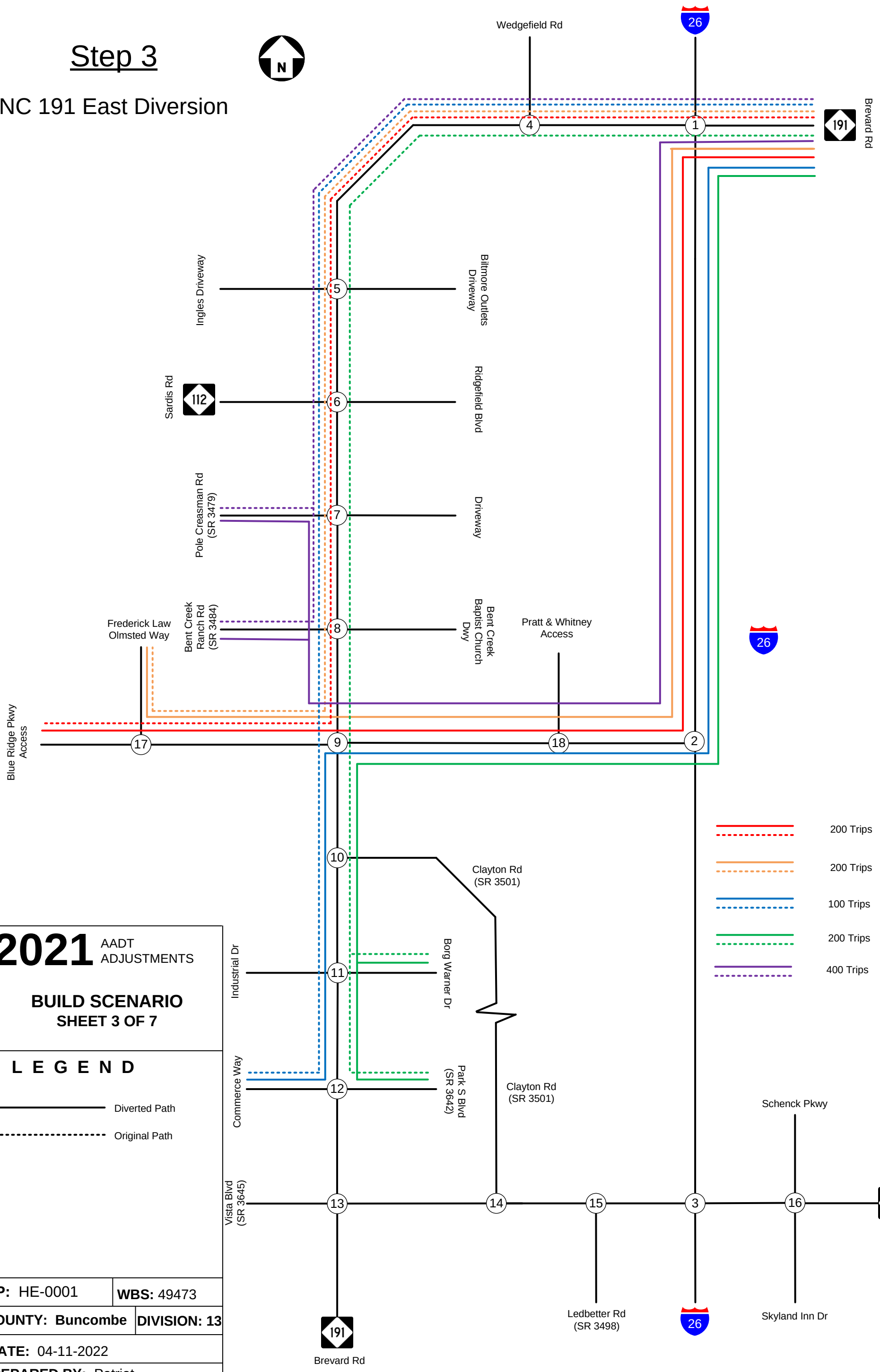

2021 AADT ADJUSTMENTS

BUILD SCENARIO
SHEET 3 OF 7

L E G E N D

Diverted Path

Original Path

TIP: HE-0001	**WBS:** 49473
COUNTY: Buncombe	**DIVISION: 13**
DATE: 04-11-2022	
PREPARED BY: Patriot Transportation Engineering, PLLC	
LOCATION: I-26/NC 191 Connector	
PROJECT: I-26 Future Interchange at NC 191 Connector (Exit 35)	

Brevard Rd - 2021 AADT = 20,000

O-D Pair	% of AADT	Diverted AADT (calculated)	Diverted AADT (selected)
Brevard Rd (NC 191) - East of I-26 to/from Frederick Law Olmsted Way	1.5%	290	**200**
Brevard Rd (NC 191) - East of I-26 to/from Blue Ridge Parkway Access	1.6%	310	**200**
Brevard Rd (NC 191) - East of I-26 to/from Bent Creek Ranch Road/Pole Creasman Road	2.9%	570	**400**
Brevard Rd (NC 191) - East of I-26 to/from Commerce Way/Industrial Drive	0.7%	140	**100**
Brevard Rd (NC 191) - East of I-26 to/from Borg Warner Dr/Park South Blvd	0.9%	190	**200**

Step 4

Schenk Pkwy Diversion

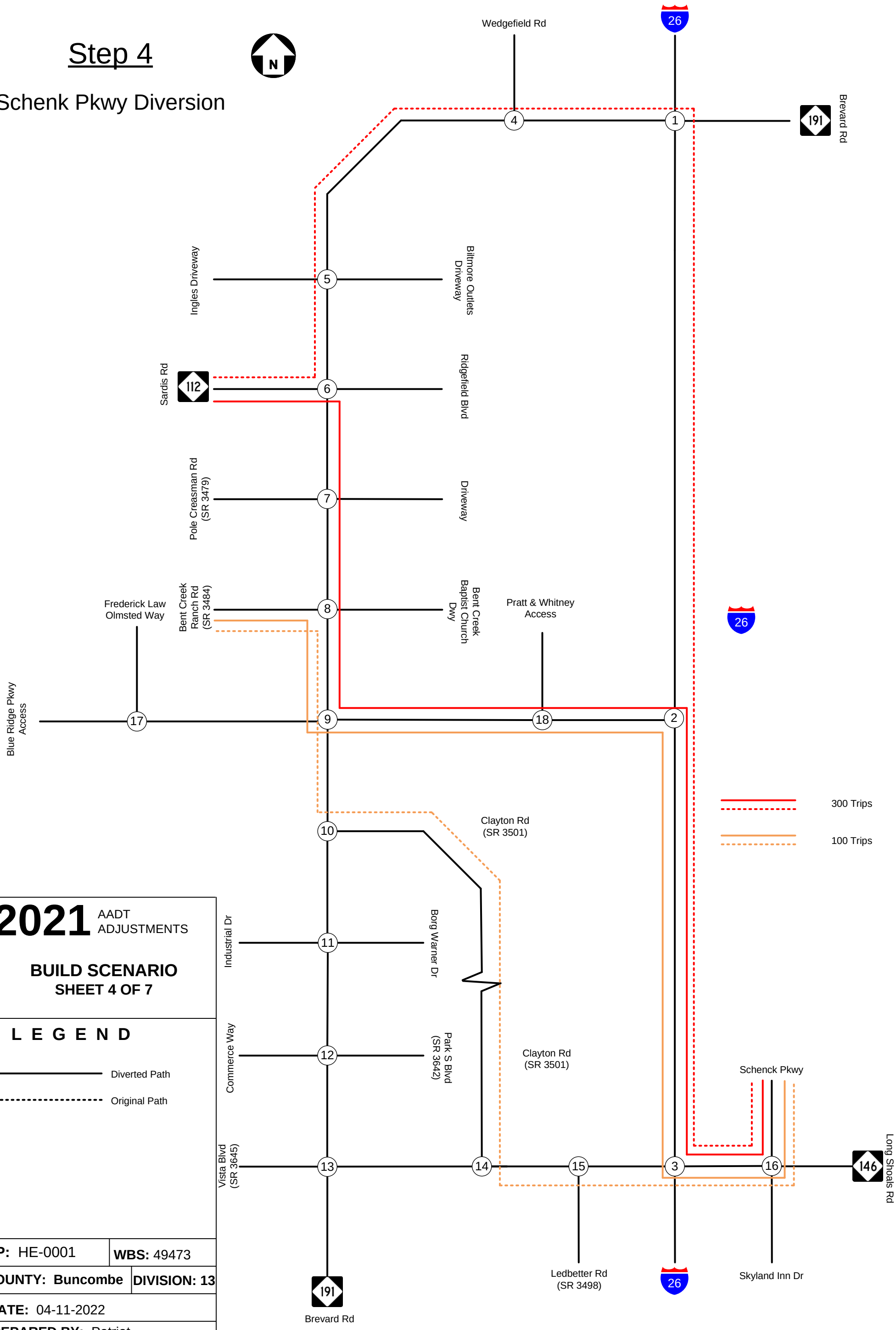

2021 AADT ADJUSTMENTS

BUILD SCENARIO
SHEET 4 OF 7

L E G E N D

Diverted Path

Original Path

TIP: HE-0001	**WBS:** 49473
COUNTY: Buncombe	**DIVISION: 13**
DATE: 04-11-2022	
PREPARED BY: Patriot Transportation Engineering, PLLC	
LOCATION: I-26/NC 191 Connector	
PROJECT: I-26 Future Interchange at NC 191 Connector (Exit 35)	

Schenck Parkway - 2021 AADT = 16,800

O-D Pair	% of AADT	Diverted AADT (calculated)	Diverted AADT (selected)
Schenck Parkway - North of Long Shoals Road to/from Frederick Law Olmsted Way	0.2%	40	**0**
Schenck Parkway - North of Long Shoals Road to/from Blue Ridge Parkway Access	0.2%	40	**0**
Schenck Parkway - North of Long Shoals Road to/from Sardis Rd (NC 112)	3.4%	570	**300**
Schenck Parkway - North of Long Shoals Road to/from Bent Creek Ranch Road/Pole Creasman Road	0.8%	130	**100**
Schenck Parkway - North of Long Shoals Road to/from Bent Creek Baptist Church Dwy	0.1%	10	**0**

Step 5

NC 146 Diversion

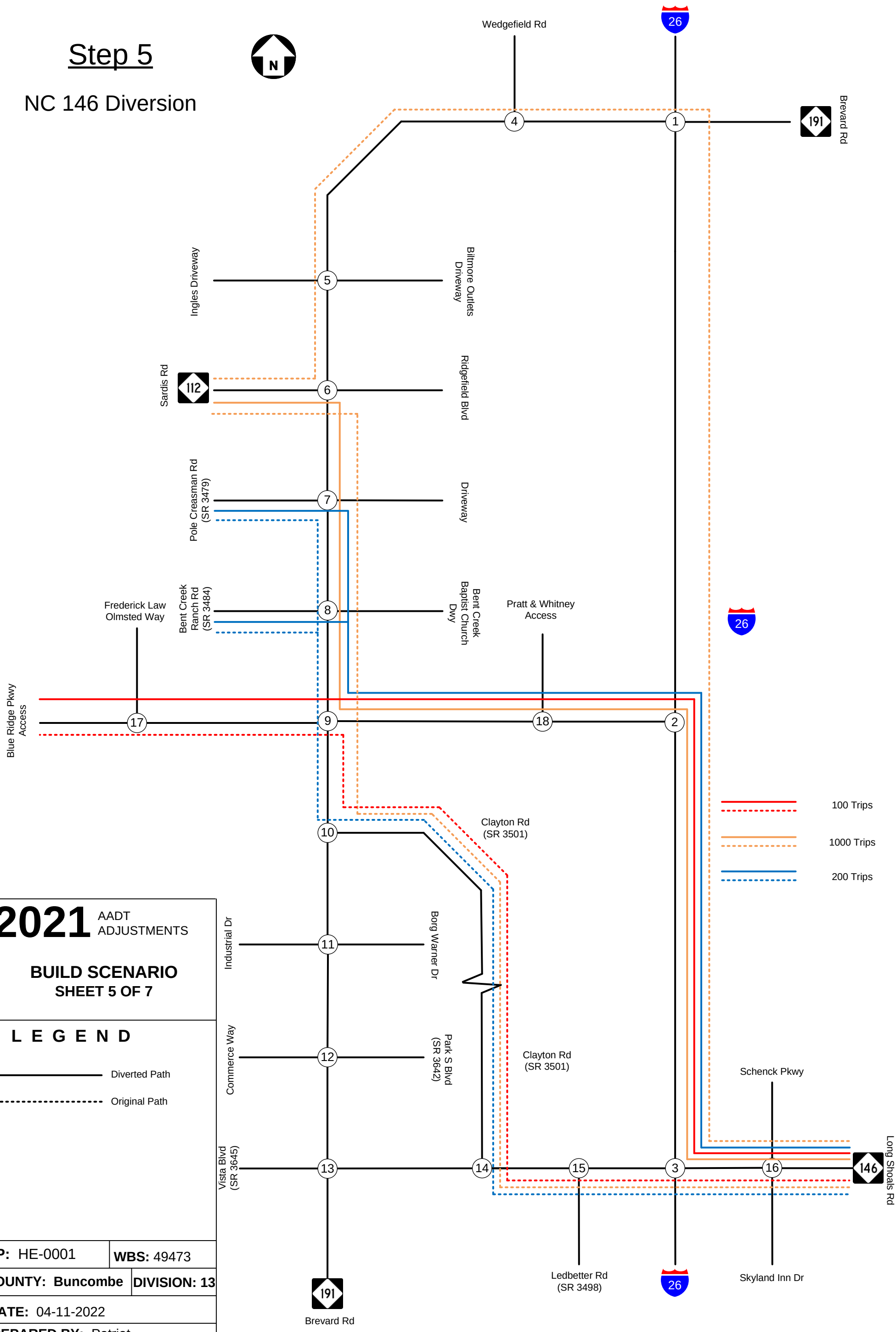

2021 AADT ADJUSTMENTS

BUILD SCENARIO
SHEET 5 OF 7

L E G E N D

Diverted Path

Original Path

TIP: HE-0001 | **WBS:** 49473

COUNTY: Buncombe | **DIVISION: 13**

DATE: 04-11-2022

PREPARED BY: Patriot Transportation Engineering, PLLC

LOCATION: I-26/NC 191 Connector

PROJECT: I-26 Future Interchange at NC 191 Connector (Exit 35)

Long Shoals Road - 2021 AADT = 33,400

O-D Pair	% of AADT	Diverted AADT (calculated)	Diverted AADT (selected)
Long Shoals Road - East of Schenck Pkwy/Skyland Inn Dr to/from Frederick Law Olmsted Way	0.3%	100	**0**
Long Shoals Road - East of Schenck Pkwy/Skyland Inn Dr to/from Blue Ridge Parkway Access	0.3%	90	**100**
Long Shoals Road - East of Schenck Pkwy/Skyland Inn Dr to/from Sardis Rd (NC 112)	4.6%	1520	**1000**
Long Shoals Road - East of Schenck Pkwy/Skyland Inn Dr to/from Bent Creek Ranch Road/Pole Creasman	1.0%	340	**200**
Long Shoals Road - East of Schenck Pkwy/Skyland Inn Dr to/from Bent Creek Baptist Church Dwy	0.2%	70	**0**

Step 6

I-26 South Diversion

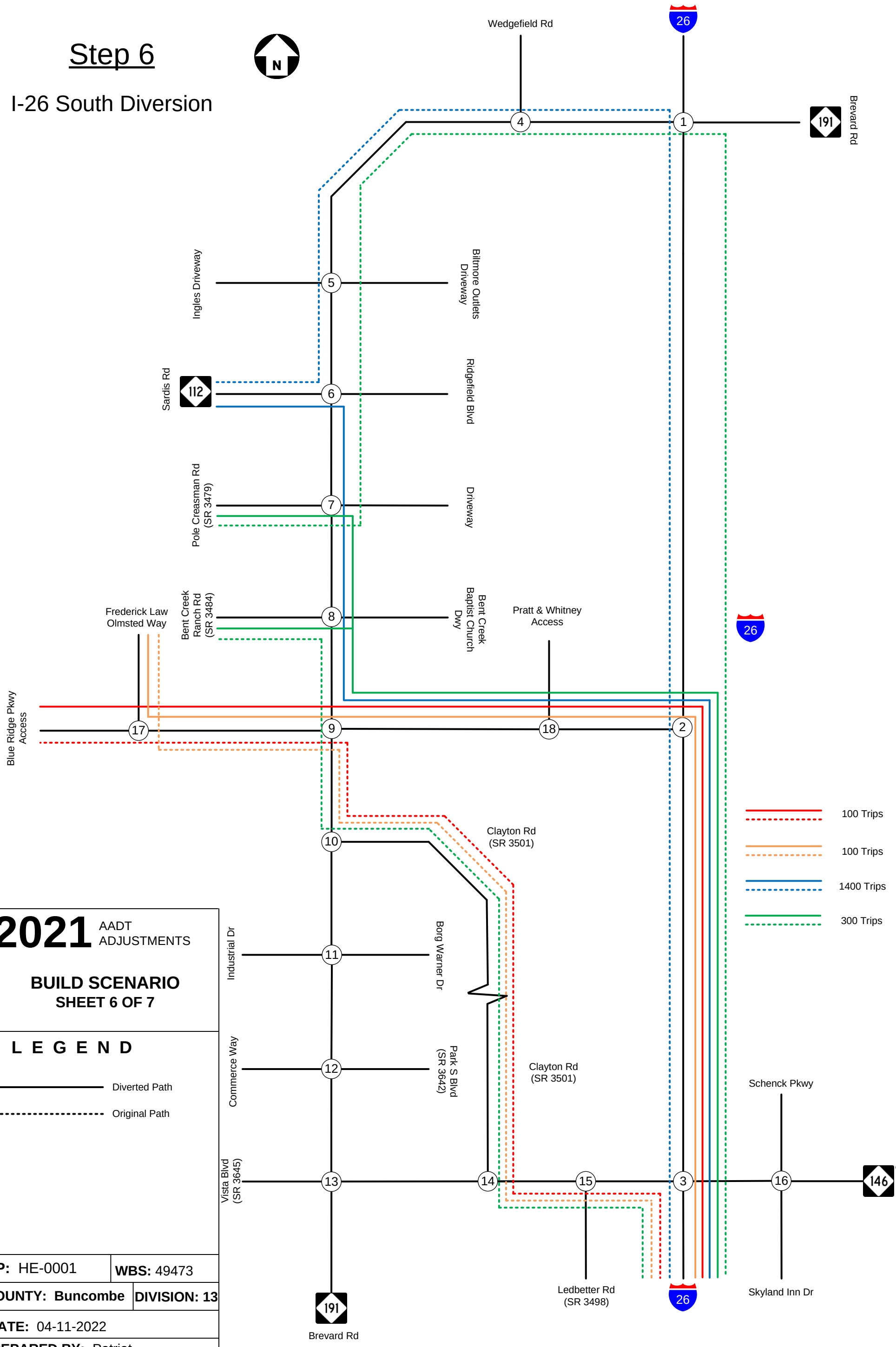

2021 AADT ADJUSTMENTS

BUILD SCENARIO
SHEET 6 OF 7

L E G E N D

Diverted Path

Original Path

TIP: HE-0001	**WBS:** 49473
COUNTY: Buncombe	**DIVISION: 13**
DATE: 04-11-2022	
PREPARED BY: Patriot Transportation Engineering, PLLC	
LOCATION: I-26/NC 191 Connector	
PROJECT: I-26 Future Interchange at NC 191 Connector (Exit 35)	

I-26 South of Long Shaols Rd - 2021 AADT = 85,700

O-D Pair	% of AADT	Diverted AADT (calculated)	Diverted AADT (selected)
I-26 - South of Long Shoals Rd to/from Frederick Law Olmsted Way	0.1%	120	**100**
I-26 - South of Long Shoals Rd to/from Blue Ridge Parkway Access	0.2%	170	**100**
I-26 - South of Long Shoals Rd to/from Sardis Rd (NC 112)	2.8%	2370	**1400**
I-26 - South of Long Shoals Rd to/from Bent Creek Ranch Road/Pole Creasman Road	0.5%	390	**300**
I-26 - South of Long Shoals Rd to/from Bent Creek Baptist Church Dwy	0.1%	100	**0**

Trip Diversion Summary

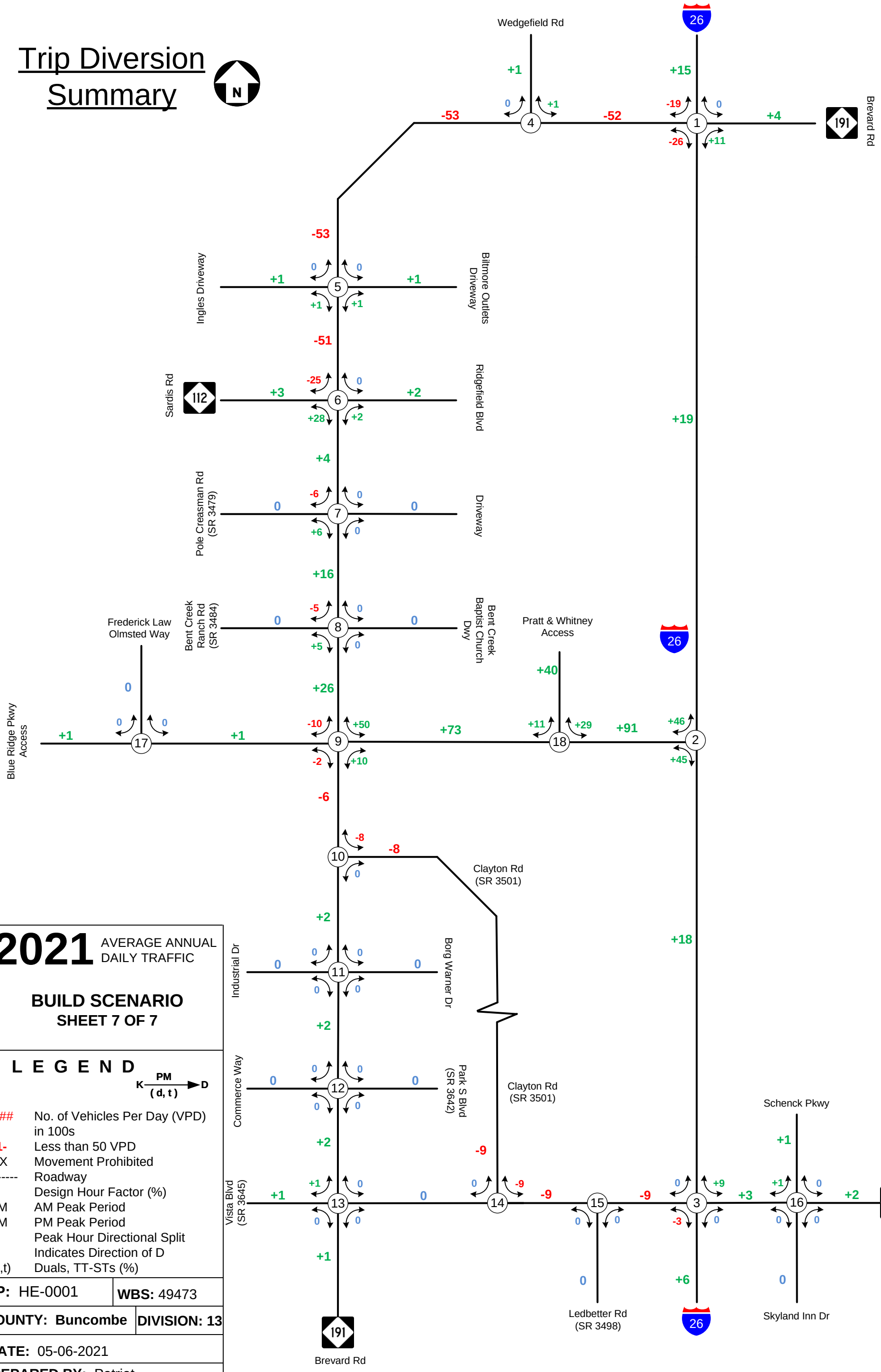

2021 AVERAGE ANNUAL DAILY TRAFFIC

BUILD SCENARIO
SHEET 7 OF 7

L E G E N D

K PM → D
(d, t)

###	No. of Vehicles Per Day (VPD) in 100s
1-	Less than 50 VPD
X	Movement Prohibited
-------	Roadway
K	Design Hour Factor (%)
AM	AM Peak Period
PM	PM Peak Period
D	Peak Hour Directional Split
→	Indicates Direction of D
(d,t)	Duals, TT-STs (%)

TIP: HE-0001 | **WBS:** 49473

COUNTY: Buncombe | **DIVISION:** 13

DATE: 05-06-2021

PREPARED BY: Patriot Transportation Engineering, PLLC

LOCATION: I-26/NC 191 Connector

PROJECT: I-26 Future Interchange at NC 191 Connector (Exit 35)

Step 1

Biltmore Park West Diversion

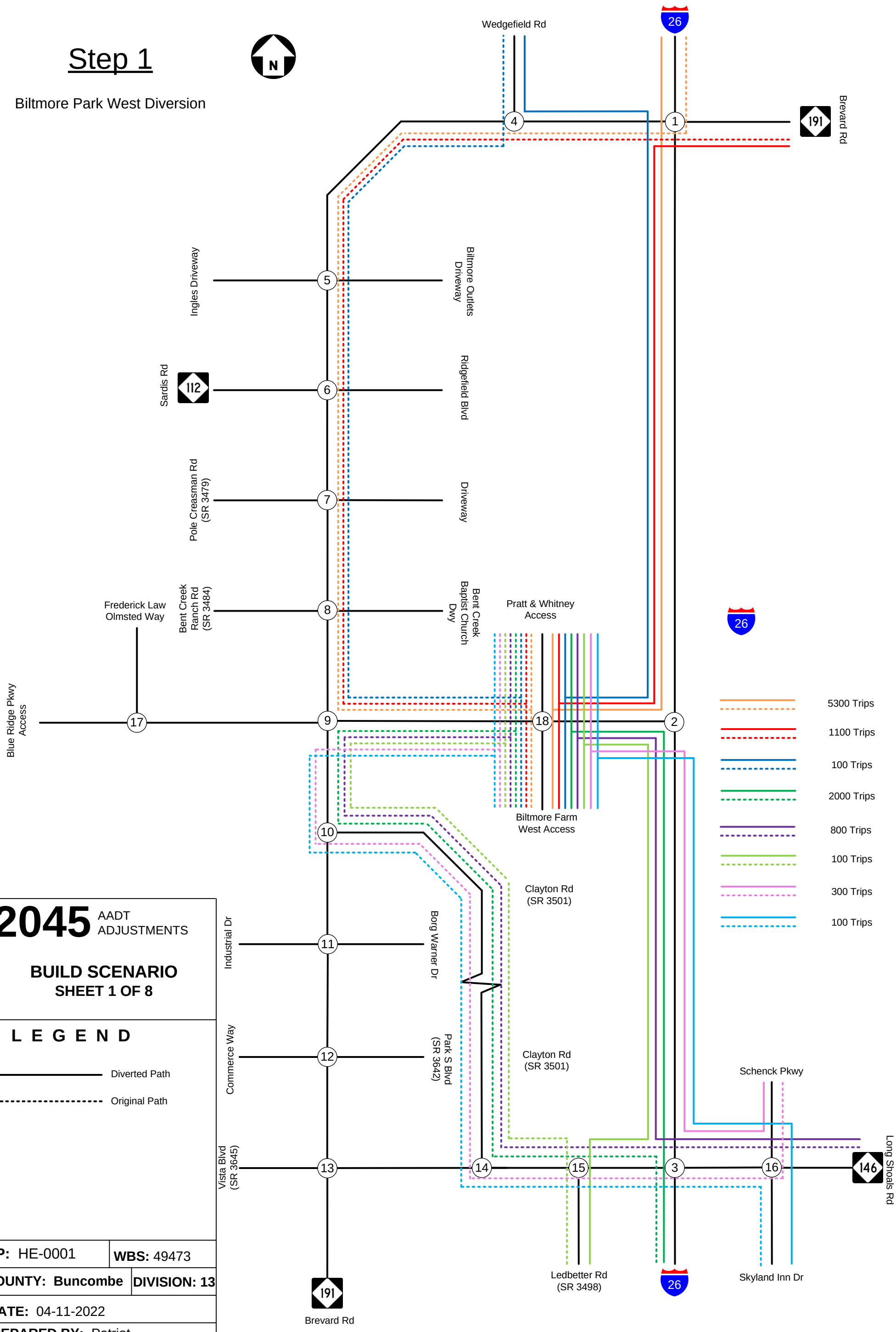

2045 AADT ADJUSTMENTS

BUILD SCENARIO
SHEET 1 OF 8

L E G E N D

Diverted Path

Original Path

TIP: HE-0001	**WBS:** 49473
COUNTY: Buncombe	**DIVISION: 13**
DATE: 04-11-2022	
PREPARED BY: Patriot Transportation Engineering, PLLC	
LOCATION: I-26/NC 191 Connector	
PROJECT: I-26 Future Interchange at NC 191 Connector (Exit 35)	

Step 2

I-26 North Diversion

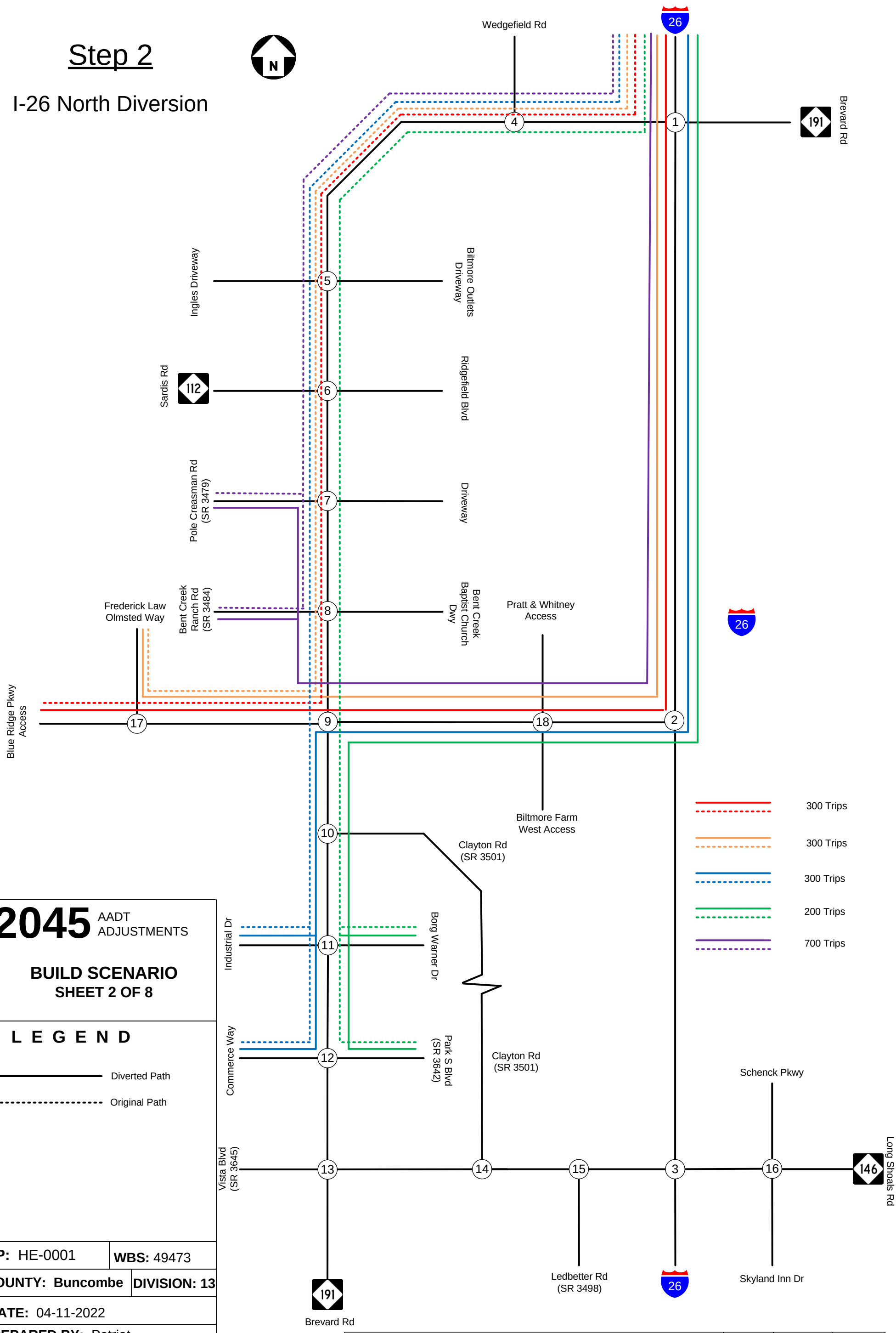

2045 AADT ADJUSTMENTS

BUILD SCENARIO
SHEET 2 OF 8

L E G E N D

Diverted Path

Original Path

TIP: HE-0001	**WBS:** 49473
COUNTY: Buncombe	**DIVISION: 13**
DATE: 04-11-2022	
PREPARED BY: Patriot Transportation Engineering, PLLC	
LOCATION: I-26/NC 191 Connector	
PROJECT: I-26 Future Interchange at NC 191 Connector (Exit 35)	

I-26 North of Brevard Rd - 2045 AADT = 118,000

O-D Pair	% of AADT	Diverted AADT (calculated)	Diverted AADT (selected)
I-26 - North of Brevard Rd (NC 191) to/from Frederick Law Olmsted Way	0.3%	390	**300**
I-26 - North of Brevard Rd (NC 191) to/from Blue Ridge Parkway Access	0.3%	360	**300**
I-26 - North of Brevard Rd (NC 191) to/from Bent Creek Ranch Road/Pole Creasman Road	0.7%	860	**700**
I-26 - North of Brevard Rd (NC 191) to/from Commerce Way/Industrial Drive	0.3%	310	**300**
I-26 - North of Brevard Rd (NC 191) to/from Borg Warner Dr/Park South Blvd	0.2%	290	**200**

Step 3

NC 191 East Diversion

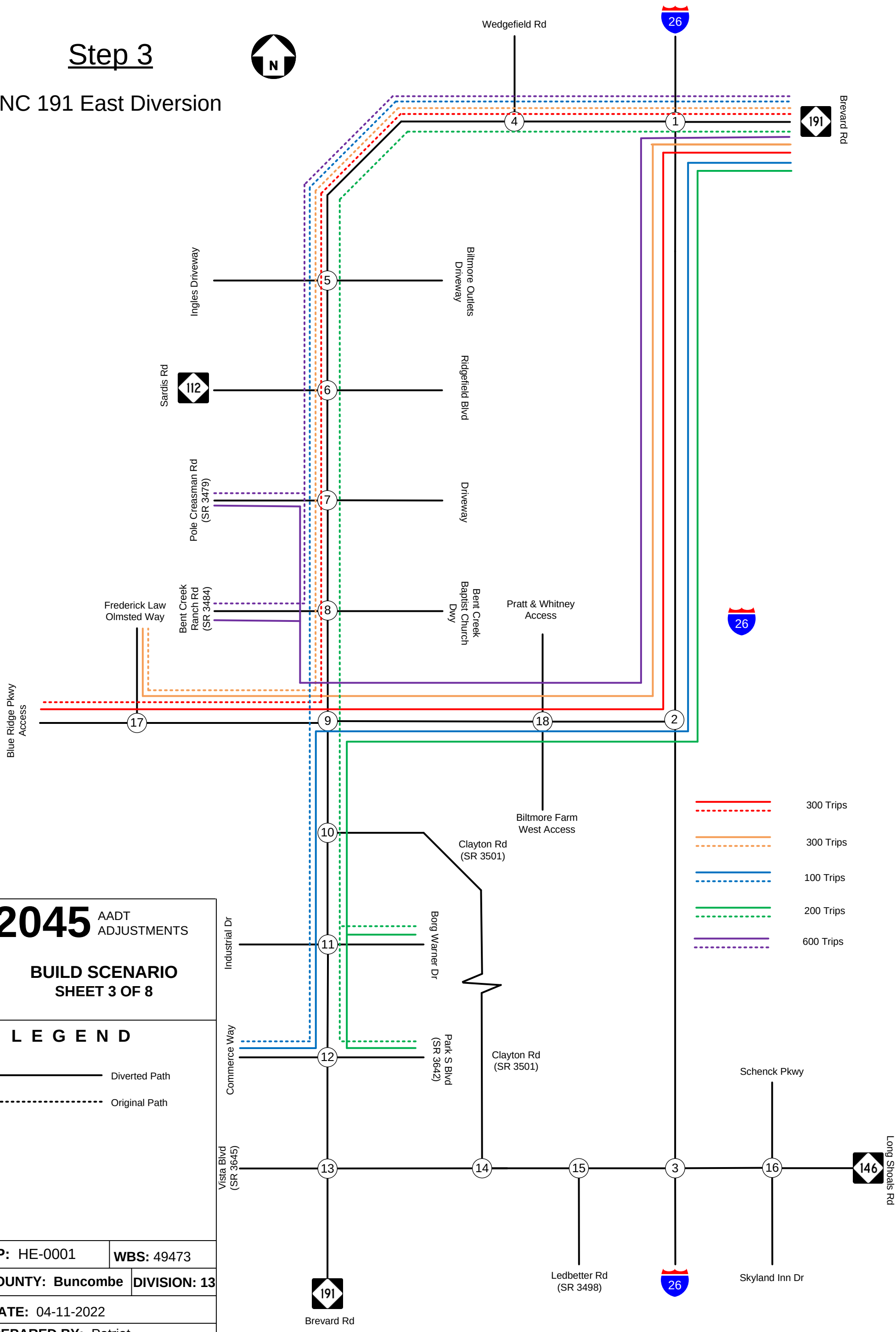

2045 AADT ADJUSTMENTS

BUILD SCENARIO
SHEET 3 OF 8

L E G E N D

Diverted Path

Original Path

TIP: HE-0001	**WBS:** 49473
COUNTY: Buncombe	**DIVISION: 13**
DATE: 04-11-2022	
PREPARED BY: Patriot Transportation Engineering, PLLC	
LOCATION: I-26/NC 191 Connector	
PROJECT: I-26 Future Interchange at NC 191 Connector (Exit 35)	

Brevard Rd - 2045 AADT = 30,000

O-D Pair	% of AADT	Diverted AADT (calculated)	Diverted AADT (selected)
Brevard Rd (NC 191) - East of I-26 to/from Frederick Law Olmsted Way	1.5%	440	**300**
Brevard Rd (NC 191) - East of I-26 to/from Blue Ridge Parkway Access	1.6%	470	**300**
Brevard Rd (NC 191) - East of I-26 to/from Bent Creek Ranch Road/Pole Creasman Road	2.9%	860	**600**
Brevard Rd (NC 191) - East of I-26 to/from Commerce Way/Industrial Drive	0.7%	210	**100**
Brevard Rd (NC 191) - East of I-26 to/from Borg Warner Dr/Park South Blvd	0.9%	280	**200**

Step 4

Schenk Pkwy Diversion

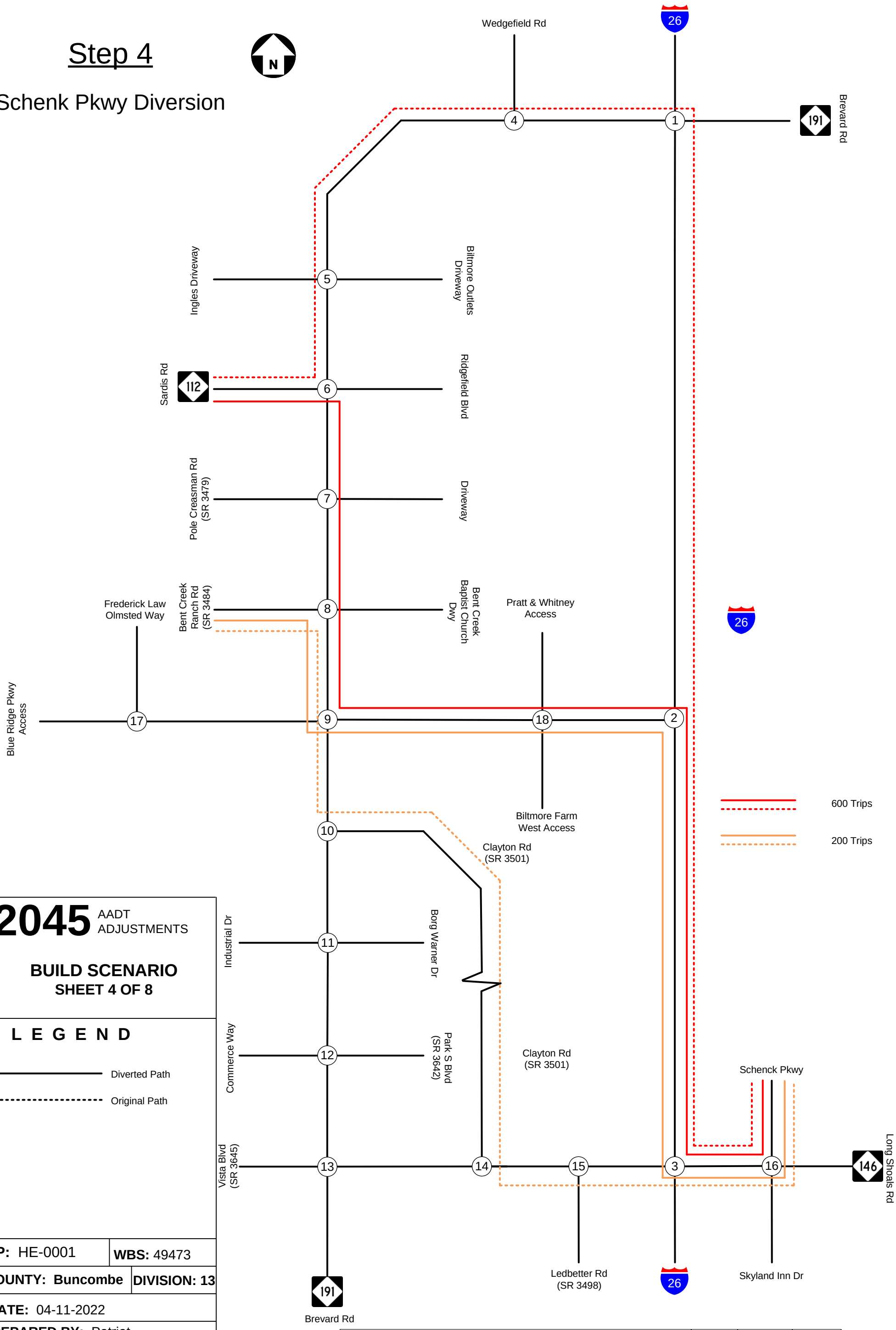

2045 AADT ADJUSTMENTS

BUILD SCENARIO
SHEET 4 OF 8

L E G E N D

Diverted Path

Original Path

TIP: HE-0001	**WBS:** 49473
COUNTY: Buncombe	**DIVISION: 13**
DATE: 04-11-2022	
PREPARED BY: Patriot Transportation Engineering, PLLC	
LOCATION: I-26/NC 191 Connector	
PROJECT: I-26 Future Interchange at NC 191 Connector (Exit 35)	

Schenck Parkway - 2045 AADT = 30,800

O-D Pair	% of AADT	Diverted AADT (calculated)	Diverted AADT (selected)
Schenck Parkway - North of Long Shoals Road to/from Frederick Law Olmsted Way	0.2%	70	**0**
Schenck Parkway - North of Long Shoals Road to/from Blue Ridge Parkway Access	0.2%	70	**0**
Schenck Parkway - North of Long Shoals Road to/from Sardis Rd (NC 112)	3.4%	1050	**600**
Schenck Parkway - North of Long Shoals Road to/from Bent Creek Ranch Road/Pole Creasman Road	0.8%	250	**200**
Schenck Parkway - North of Long Shoals Road to/from Bent Creek Baptist Church Dwy	0.1%	20	**0**

Step 5

NC 146 Diversion

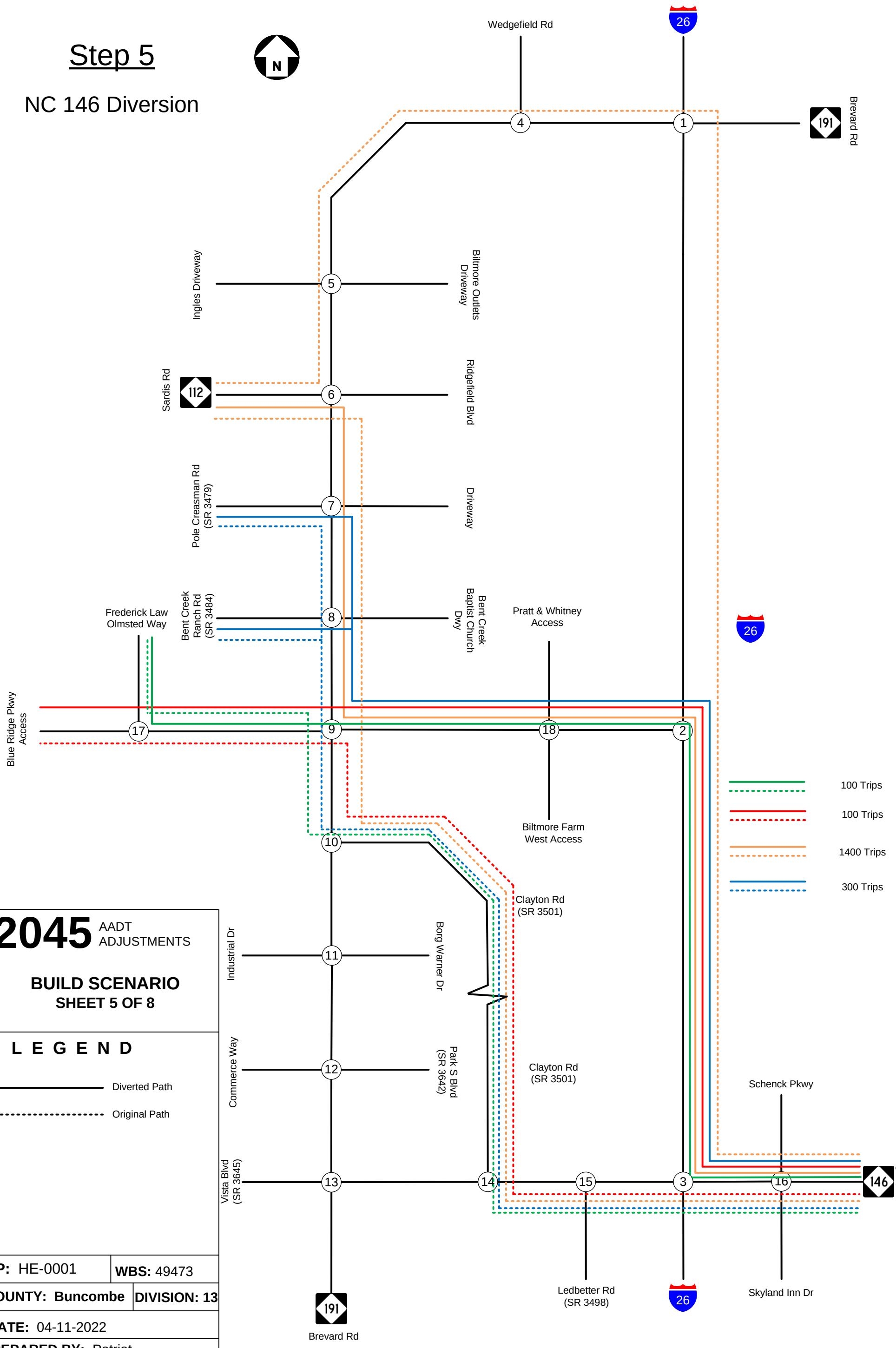

2045 AADT ADJUSTMENTS

BUILD SCENARIO
SHEET 5 OF 8

L E G E N D

Diverted Path

Original Path

TIP: HE-0001	**WBS:** 49473
COUNTY: Buncombe	**DIVISION: 13**
DATE: 04-11-2022	
PREPARED BY: Patriot Transportation Engineering, PLLC	
LOCATION: I-26/NC 191 Connector	
PROJECT: I-26 Future Interchange at NC 191 Connector (Exit 35)	

Long Shoals Road - 2045 AADT = 45,000

O-D Pair	% of AADT	Diverted AADT (calculated)	Diverted AADT (selected)
Long Shoals Road - East of Schenck Pkwy/Skyland Inn Dr to/from Frederick Law Olmsted Way	0.3%	130	**100**
Long Shoals Road - East of Schenck Pkwy/Skyland Inn Dr to/from Blue Ridge Parkway Access	0.3%	120	**100**
Long Shoals Road - East of Schenck Pkwy/Skyland Inn Dr to/from Sardis Rd (NC 112)	4.6%	2050	**1400**
Long Shoals Road - East of Schenck Pkwy/Skyland Inn Dr to/from Bent Creek Ranch Road/Pole Creasman	1.0%	460	**300**
Long Shoals Road - East of Schenck Pkwy/Skyland Inn Dr to/from Bent Creek Baptist Church Dwy	0.2%	100	**0**

Step 6

I-26 South Diversion

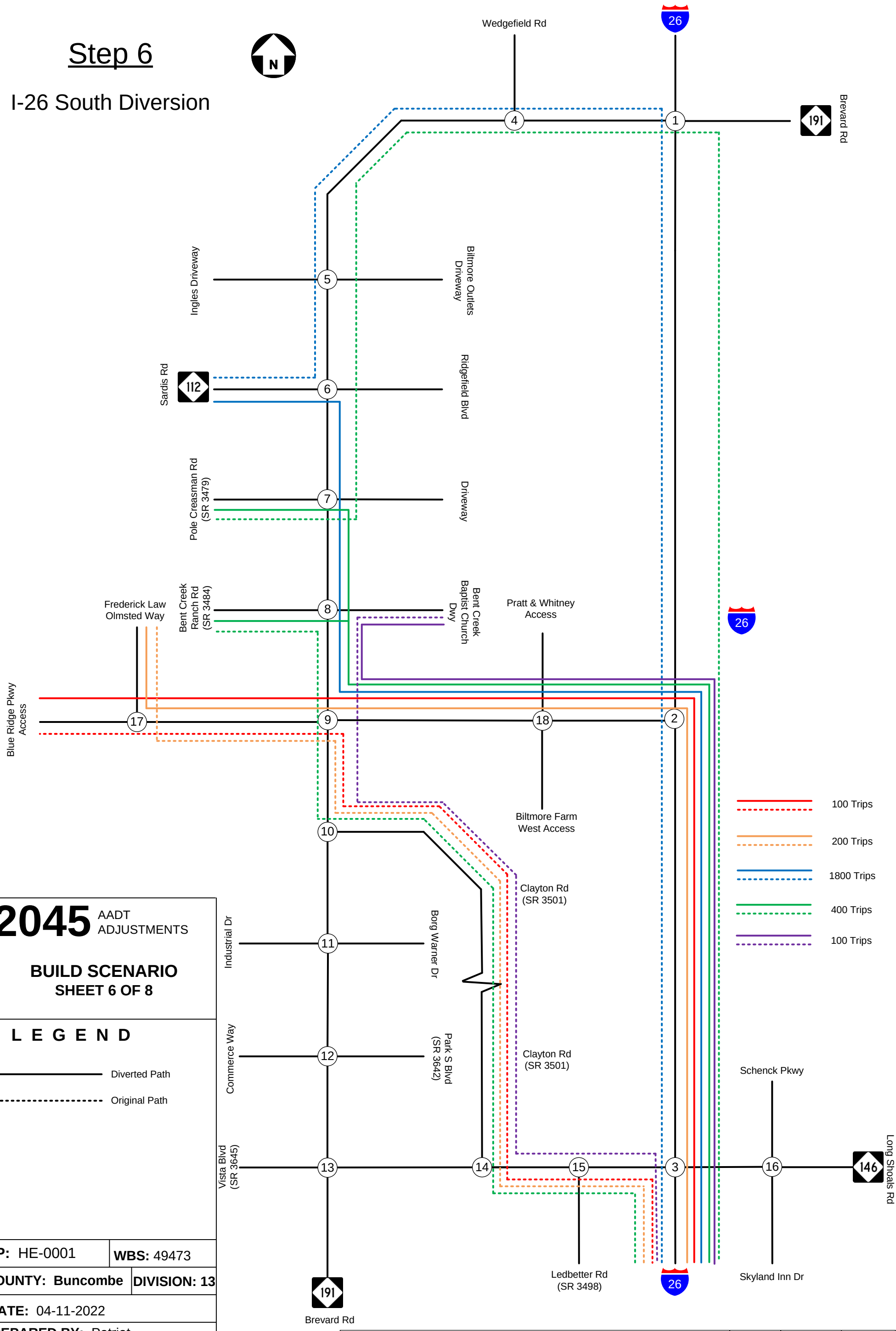

2045 AADT ADJUSTMENTS

BUILD SCENARIO
SHEET 6 OF 8

L E G E N D

Diverted Path

Original Path

TIP: HE-0001 | **WBS:** 49473

COUNTY: Buncombe | **DIVISION: 13**

DATE: 04-11-2022

PREPARED BY: Patriot Transportation Engineering, PLLC

LOCATION: I-26/NC 191 Connector

PROJECT: I-26 Future Interchange at NC 191 Connector (Exit 35)

I-26 South of Long Shaols Rd - 2045 AADT = 113,400

O-D Pair	% of AADT	Diverted AADT (calculated)	Diverted AADT (selected)
I-26 - South of Long Shoals Rd to/from Frederick Law Olmsted Way	0.1%	160	**100**
I-26 - South of Long Shoals Rd to/from Blue Ridge Parkway Access	0.2%	230	**200**
I-26 - South of Long Shoals Rd to/from Sardis Rd (NC 112)	2.8%	3140	**1800**
I-26 - South of Long Shoals Rd to/from Bent Creek Ranch Road/Pole Creasman Road	0.5%	520	**400**
I-26 - South of Long Shoals Rd to/from Bent Creek Baptist Church Dwy	0.1%	130	**100**

Step 7

I-26 Additional Demand

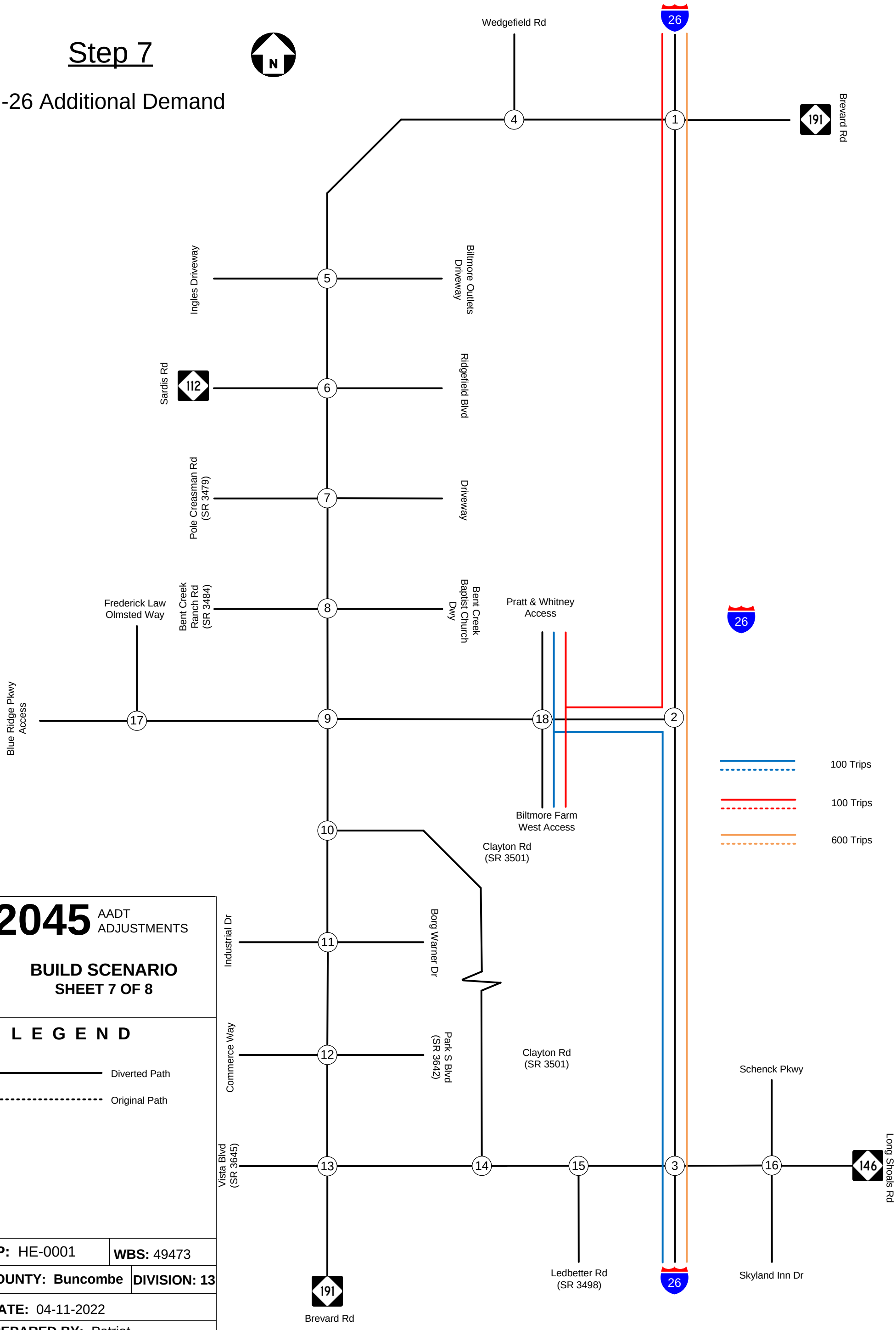

2045 AADT ADJUSTMENTS

BUILD SCENARIO
SHEET 7 OF 8

L E G E N D

Diverted Path

Original Path

TIP: HE-0001	**WBS:** 49473
COUNTY: Buncombe	**DIVISION: 13**
DATE: 04-11-2022	
PREPARED BY: Patriot Transportation Engineering, PLLC	
LOCATION: I-26/NC 191 Connector	
PROJECT: I-26 Future Interchange at NC 191 Connector (Exit 35)	

Trip Diversion Summary

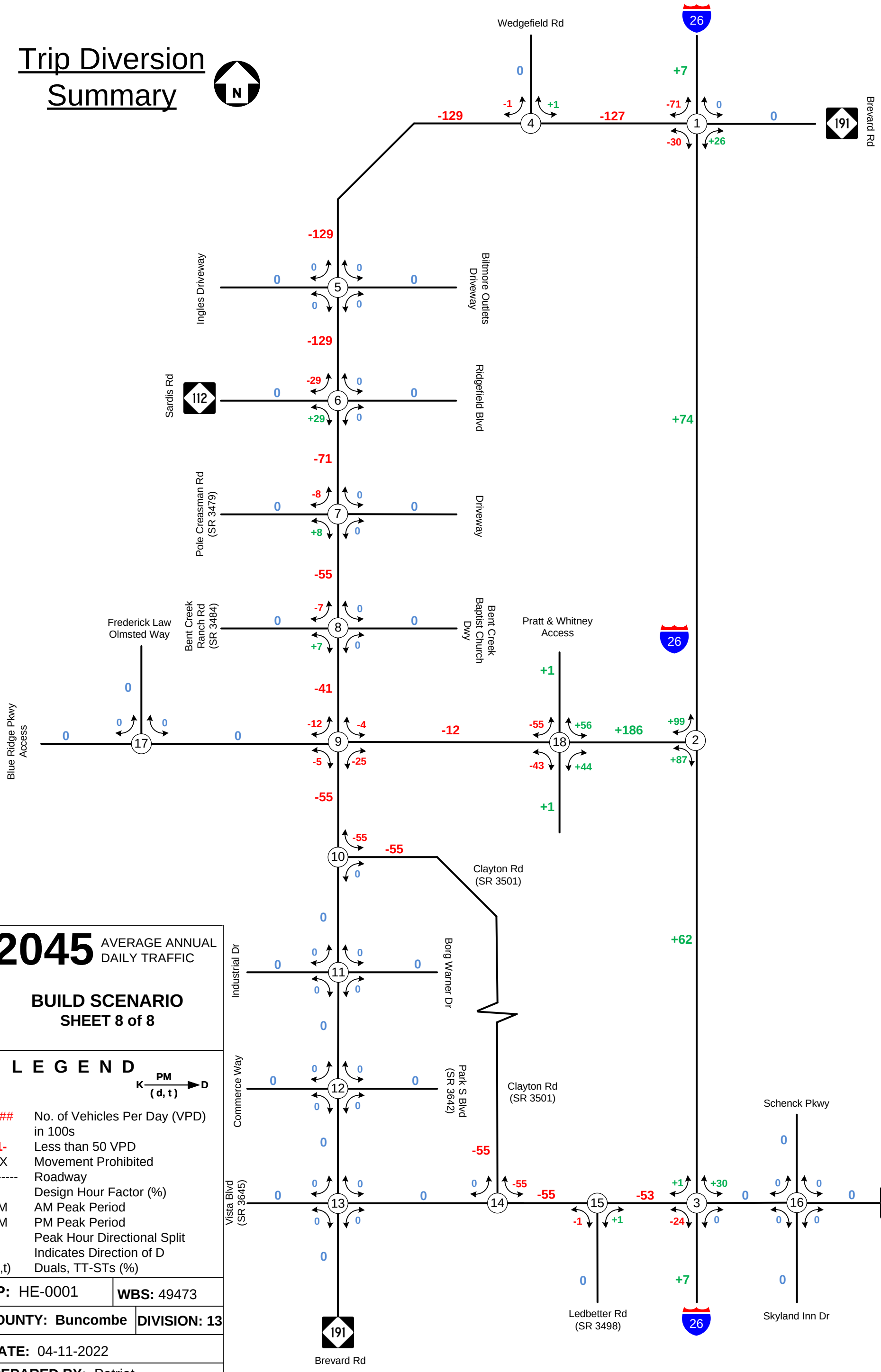

2045 AVERAGE ANNUAL DAILY TRAFFIC

BUILD SCENARIO
SHEET 8 of 8

L E G E N D

K PM (d, t) D

###	No. of Vehicles Per Day (VPD) in 100s
1-	Less than 50 VPD
X	Movement Prohibited
-------	Roadway
K	Design Hour Factor (%)
AM	AM Peak Period
PM	PM Peak Period
D	Peak Hour Directional Split
→	Indicates Direction of D
(d,t)	Duals, TT-STs (%)

TIP: HE-0001 | **WBS:** 49473

COUNTY: Buncombe | **DIVISION:** 13

DATE: 04-11-2022

PREPARED BY: Patriot Transportation Engineering, PLLC

LOCATION: I-26/NC 191 Connector

PROJECT: I-26 Future Interchange at NC 191 Connector (Exit 35)



PREPARED BY:
PATRIOT TRANSPORTATION ENGINEERING, PLLC
3008 ANDERSON DRIVE
SUITE 220
RALEIGH, NC 27609
PHONE: (919) 977-9125
NC LICENSE # P-1173

PATRIOT
TRANSPORTATION
ENGINEERING, PLLC

DocuSign Envelope ID: 5C03745C-4B01-4834-A65D-B77F558A4F46

I-26 FUTURE INTERCHANGE (EXIT 35)
INTERSTATE ACCESS REPORT
TIP PROJECT HE-0001

November 2022

Prepared for:

North Carolina Department of Transportation
Raleigh, North Carolina

And

Federal Highway Administration
Raleigh, North Carolina

Prepared by:

Three Oaks Engineering, Inc.
324 Blackwell Street, Ste 1200
Durham, NC 27701
NCBELS License #: F-1334

NORTH CAROLINA PROFESSIONAL SEAL 023988 ENGINEER MARK A. FREEMAN

DocuSigned by:
Mark A. Freeman
1A89F7746F8F45E...
11/15/2022

THREE OAKS ENGINEERING · THREE OAKS ENGINEERING ·

DocuSign Envelope ID: 5C03745C-4B01-4834-A65D-B77F558A4F46

EXECUTIVE SUMMARY

This Interstate Access Request (IAR) provides an analysis of the HE-0001 Project that proposes a new interchange on I-26 between the existing interchanges of NC 191 (Brevard Road) and NC 146 (Long Shoals Road) in Asheville, North Carolina. There were two interchange concepts being considered at the time that the initial IAR was developed. The first is a standard diamond interchange with all ramps diverging or merging from the right side of the interstate. The second option, developed to reduce the impact on the historic Biltmore property, is to have the westbound on and off ramps connect on the left (west) side of the interstate. With the proposed interchange located in the bifurcated section of I-26, there is the potential of constructing the ramps on the left side, in between the westbound and eastbound interstate segments. Also, since the owner of the property to the east of the proposed interchange has stated that there is no plan to develop any of that land (as it is the Historic Biltmore property), there should be no future access nor connection to the east.. The analysis includes the 2021 Existing, 2021 Base Year Build, 2045 Future Year No-Build, and 2045 Future Year Build scenarios.

After completion of the initial IAR (dated 10.18.2021), the North Carolina Department of Transportation (NCDOT) suggested using a Diverging Diamond Interchange (DDI) to connect the new roadway to I-26. The DDI concept was analyzed and presented to the project team by way of a supplemental analysis memo which is included in **Appendix T**. While the DDI operations are comparable to the original standard diamond, there are recommendations regarding the specifics of the design of the ramp terminal movements. Those are provided in Section 2 of this report and in the DDI comparison memo provided in **Appendix T**.

This report is an update to the originally submitted IAR. This update was created to compile the original analysis data with the results of the DDI analysis. The DDI analysis is appended to this report **(Appendix T),** and the results are added to the comparison tables in Section 2.

The HE-0001 project also accesses a new connector being built from just west of the proposed interchange and that intersects with NC 191 (Brevard Road) at the existing intersection of NC 191 (Brevard Road) and the access to the Blue Ridge Parkway. Details pertaining to these analyses can be found within this IAR and attached appendices. This section provides a summary of the analysis and findings.

Policy Point 1 (Traffic Analysis)

Traffic conditions were analyzed for the freeway segments using FREEVAL and for the arterial segments using Synchro and any roundabouts were analyzed using SIDRA. Volumes for the traffic analysis were derived from the approved forecast for the project dated June 29, 2021.

FREEVAL

Based on the FREEVAL analysis, all segments in the 2045 Future Year No-Build scenario operate at LOS D or better. In comparison, all segments in the 2045 Future Year Build scenario operate at LOS D or better with the following exceptions. In the 4:30-4:45 PM interval, in the eastbound direction, I-26 between NC 191 (Brevard Road) and the new interchange (basic freeway, Segment 5), I-26 between the new interchange and NC 146 (Long Shoals Road)

DocuSign Envelope ID: 5C03745C-4B01-4834-A65D-B77F558A4F46

interchange (basic freeway, Segment 9), and I-26 southeast of the NC 146 (Long Shoals Road) interchange (basic freeway Segment 13) operate at LOS E. To compare operations to the I-4400/I-4700 study, the forecast volumes were interpolated to 2040 (to match the analysis year of I-4400/I-4700). FREEVAL shows that all segments operate at LOS D or better in 2040, including Segment 5, Segment 9, and Segment 13.

The following table provides a summary of the lowest level of service reported.

Table ES-1 FREEVAL LOS Summary

	Seg 1	Seg 2	Seg 3	Seg 4	Seg 5	Seg 6	Seg 7	Seg 8	Seg 9	Seg 10	Seg 11	Seg 12	Seg 13
2021 Existing	C	C	C	C	C	B	B	C	C	n/a	n/a	n/a	n/a
2021 Build	C	C	C	C	C	C	C	C	C	C	B	C	C
2021 Build (Left Ent./Exit)	C	C	C	C	C	C	C	C	C	C	B	C	C
2045 No-Build	D	D	D	D	D	C	D	D	D	n/a	n/a	n/a	n/a
2045 Build	D	D	D	D	**E**	D	D	D	**E**	D	D	D	**E**
2045 Build Left Ent./Exit	D	D	D	D	**E**	D	D	D	**E**	D	D	D	**E**
2040 Build	D	D	D	D	D	D	D	D	D	D	C	D	D
2040 Build (Left Ent./Exit)	D	D	D	D	D	D	D	D	D	D	C	D	D

DocuSign Envelope ID: 5C03745C-4B01-4834-A65D-B77F558A4F46

Synchro

Synchro Version 10 traffic analysis software was utilized to evaluate operations at the surface street intersections in the project area. As with FREEVAL, the 2021 Existing Synchro network included the improvements made as part of I-4400/I-4700. Specifically, I-4400/I-4700 relocated the NC 191 (Brevard Road) westbound off ramp to provide more storage and additional spacing between the signalized ramp terminal intersections. The project also removed the north leg from the I-26 eastbound ramp terminal intersection with NC 191 (Brevard Road), converting it to a three-leg configuration.

Volumes for the Synchro analyses were derived from the travel demand forecast for the project. The peak hour calculation uses the forecasted AADT, along with the factors to calculate AM and PM volumes and the directional split within each peak hour to calculate turning movement volumes for each intersection in the study area. Volumes are input into Synchro, along with network data such as speed limit, and traffic control data such as signal timings and signal phasing to analyze operations.

A detailed capacity analysis of the full project area was being prepared concurrent to this IAR. That report will discuss capacity analysis details such as necessary storage and detailed delay and level of service data for each intersection. The intent of this section of the IAR is to provide an analysis that focuses on the effects of constructing the interchange associated with HE-0001.

DocuSign Envelope ID: 5C03745C-4B01-4834-A65D-B77F558A4F46

Table ES-2 Comparison of 2045 No-Build and Build AM Level of Service and Delay (seconds/vehicle)

Intersection (Synchro Node Number)	2045 AM	
	Overall Intersection Delay (LOS) No-Build / Build	Approach Delay (LOS) of LOS E/F Movements No-Build / Build
NC 191 (Brevard Road) and Commercial Access (1) - Signalized	13.7 (B) / 11.8 (B)	**EBL - 73.1 (E) / 61.4 (E)** **SBL - 61.1 (E) / 61.1 (E)**
NC 191 (Brevard Road) and I-26 eastbound ramps (2) - Signalized	28.6 (C) / 21.3 (C)	**WBL - 76.6 (E) /** not failing **NBL - 56.6 (E) / 55.1 (E)**
NC 191 (Brevard Road) and I-26 westbound ramps (3) - Signalized	18.5 (B) / 19.3 (B)	n/a
Blue Ridge Parkway Access and Fredrick Olmstead Way (4) - Unsignalized*	11.3 (B) – no change	n/a
NC 191 (Brevard Road) and Blue Ridge Parkway Access (5) - Signalized	37.5 (D) / 30.1 (C)	**EBL - 57.0 (E) /** not failing **NBL - 57.9 (E) /** not failing
NC 146 (Long Shoals Road) and Clayton Road (8) - Signalized	27.8 (C) / 24.9 (C)	**EBL - 83.1 (F) / 96.0 (F)** **SBL - 62.7 (E) / 79.9 (E)**
NC 146 (Long Shoals Road) and Ledbetter Road (9) - Unsignalized*	**498.8 (F) / 181.2 (F)**	**NBL - 2936.1 (F) / 885.3 (F)** **NBR - 228.6 (F) / 112.4 (F)**
NC 146 (Long Shoals Road) and I-26 ramps (Single Point) (10) - Signalized	**104.3 (F) / 120.3 (F)**	**EBL - 61.6 (E) / 83.3 (F)** **EBT - 82.7 (F) / 60.2 (E)** **SEL - 307.3 (F) / 333.8 (F)** **NWL - 56.9 (E) / 58.5 (E)**
NC 146 (Long Shoals Road) and I-26 westbound ramp (11) - Signalized	**196.0 (F) / 200.2 (F)**	**EBT - 302.0 (F) / 305.6 (F)** **NBR - 328.3 (F) / 343.2 (F)**
NC 146 (Long Shoals Road) and Skyland Drive/Schenck Parkway (12) - Signalized	**61.7 (E) / 66.7 (E)**	**EBL - 58.0 (E) / 84.5 (F)** **EBT - 57.3 (E) / 55.2 (E)** **WBL - 75.1 (E) / 93.9 (F)** **WBT - 65.6 (E) / 69.5 (E)** **NBT - 145.0 (F) / 180.4 (F)** **SBL - 140.9 (F) / 141.1 (F)** **SBT - 139.3 (F) / 138.8 (F)**

* ICU Level of Service reported for unsignalized intersections

DocuSign Envelope ID: 5C03745C-4B01-4834-A65D-B77F558A4F46

Table ES-3 Comparison of 2045 No-Build and Build PM Level of Service and Delay

Intersection (Synchro Node Number)	2045 PM	
	Overall Intersection Delay (LOS) No-Build / Build	Approach Delay (LOS) of LOS E/F Movements No-Build / Build
NC 191 (Brevard Road) and Commercial Access (1) - Signalized	18.4 (B) / 12.4 (B)	**EBL - 128.3 (F) / 67.9 (E)** **SBL - 76.2 (E) / 61.2 (E)**
NC 191 (Brevard Road) and I-26 eastbound ramps (2) - Signalized	**58.0 (E) /** 26.2 (C)	**EBT - 81.7 (F) /** not failing **WBL - 111.8 (F) /** not failing **NBL - 104.2 (F) / 64.3 (E)**
NC 191 (Brevard Road) and I-26 westbound ramps (3) - Signalized	20.2 (C) / 19.1 (B)	**SBL - 59.0 (E) /** not failing
Blue Ridge Parkway Access and Fredrick Olmstead Way (4) - Unsignalized*	13.6 (B) / 13.7 (B)	n/a
NC 191 (Brevard Road) and Blue Ridge Parkway Access (5) - Signalized	52.6 (D) / 39.4 (D)	**EBL - 91.3 (F) / 70.0 (E)** **EBT -** not failing **/ 59.3 (E)** **WBL - 58.3 (E) / 70.9 (E)** **WBT - 78.1 (E) / 70.7 (E)** **WBR - 80.5 (F) /** not failing **NBL - 62.2 (E) / 61.1 (E)** **SBL - 85.8 (F) /** not failing
NC 146 (Long Shoals Road) and Clayton Road (8) - Signalized	27.2 (C) / 21.7 (C)	**EBL - 97.8 (F) / 88.6 (F)** **SBL - 66.8 (E) / 71.6 (E)**
NC 146 (Long Shoals Road) and Ledbetter Road (9) - Unsignalized*	**unable to report** (F) / 1861.7 (F)**	**NBL – unable to report** (F) / 20193.3 (F)** **NBR - 47.7 (E) /** not failing **WBL - 148.8 (F) / 56.4 (F)**
NC 146 (Long Shoals Road) and I-26 ramps (Single Point) (10) - Signalized	**62.4 (E) / 74.4 (E)**	**EBL - 61.4 (E) / 73.6 (E)** **WBL - 121.3 (F) / 125.2 (F)** **SEL - 167.1 (F) / 185.7 (F)** **NWL - 59.4 (E) /** not failing
NC 146 (Long Shoals Road) and I-26 westbound ramp (11) - Signalized	**59.4 (E) / 71.7 (E)**	**EBT - 109.3 (F) / 135.8 (F)** **NBR - 167.8 (F) / 183.5 (F)**
NC 146 (Long Shoals Road) and Skyland Drive/Schenck Parkway (12) - Signalized	**125.9 (F) / 125.3 (F)**	**WBL - 77.1 (E) – no change** **WBT - 182.3 (F) / 181.1 (F)** **NBT - 206.4 (F) / no change** **SBL - 216.0 (F) / no change** **SBT - 208.7 (F) / no change** **SBR - 275.0 (F) / no change**

* ICU Level of Service reported for unsignalized intersections

**Synchro states the computation can't be defined due to the high delay

DocuSign Envelope ID: 5C03745C-4B01-4834-A65D-B77F558A4F46

The construction of the HE-0001 interchange reduces projected volumes on NC 191 and relieves congestion on the Connector Road by providing an alternate pathway to I-26 from the western portion of the study area. Not surprisingly, the 2045 Build delay along NC 191 (Brevard Road) are improved from the No-Build conditions at most intersections. The overall intersection LOS improves from D to C at intersection 5, NC 191 (Brevard Road) and Blue Ridge Parkway Access in the AM peak. The overall intersection LOS also improves from E to C at intersection 2, NC 191 (Brevard Road) and I-26 eastbound ramps in the PM peak. While there are individual movement that experience higher delay in the Build scenario as compared to the No-Build, all intersections maintain or improve with respect to overall level of service.

A comparison of the 2045 No-Build and 2045 Build levels of service along the NC 146 (Long Shoals Road) corridor shows that the HE-0001 project does not change the overall level of service at any interchange. However, there are several individual movements that experience higher delay in the Build scenario as compared to the No-Build. Tables ES-2 and ES-3, above, detail each change.

Table ES-4 Summary of Level of Service and Delay

Intersection	2021 Existing		2045 No-Build		2045 Build	
	AM Delay (LOS)	PM Delay (LOS)	AM Delay (LOS)	PM Delay (LOS)	AM Delay (LOS)	PM Delay (LOS)
NC 191 (Brevard Road) and Commercial Access (1) - Signalized	11.9 (B)	9.2 (A)	13.7 (B)	18.4 (B)	11.8 (B)	12.4 (B)
NC 191 (Brevard Road) and I-26 eastbound ramps (2) - Signalized	17.9 (B)	24.1 (C)	28.6 (C)	**58.0 (E)**	21.3 (C)	26.2 (C)
NC 191 (Brevard Road) and I-26 westbound ramps (3) - Signalized	22.0 (C)	20.0 (B)	18.5 (B)	20.2 (C)	19.3 (B)	19.1 (B)
Blue Ridge Parkway Access and Fredrick Olmstead Way (4) – Unsignalized*	10.3 (B)	11.4 (B)	11.3 (B)	13.6 (B)	11.3 (B)	13.7 (B)
NC 191 (Brevard Road) and Blue Ridge Parkway Access (5) - Signalized	10.8 (B)	19.0 (B)	37.5 (D)	52.6 (D)	30.1 (C)	39.4 (D)

DocuSign Envelope ID: 5C03745C-4B01-4834-A65D-B77F558A4F46

Intersection	2021 Existing		2045 No-Build		2045 Build	
	AM Delay (LOS)	PM Delay (LOS)	AM Delay (LOS)	PM Delay (LOS)	AM Delay (LOS)	PM Delay (LOS)
HE-0001 eastbound ramps (6)	n/a	n/a	n/a	n/a	**51.6 (F)**	25.5 (D)
HE-0001 westbound ramps (7)	n/a	n/a	n/a	n/a	17.8 (B)	20.9 (C)
NC 146 (Long Shoals Road) and Clayton Road (8) - Signalized	19.4 (B)	18.2 (B)	27.8 (C)	27.2 (C)	24.9 (C)	21.7 (C)
NC 146 (Long Shoals Road) and Ledbetter Road (9) – Unsignalized*	26.3 (D)	30.7 (D)	**498.8 (F)**	**unable to report** (F)**	**181.2 (F)**	**1861.7 (F)**
NC 146 (Long Shoals Road) and I-26 ramps (Single Point) (10) - Signalized	46.7 (D)	27.1 (C)	**104.3 (F)**	**62.4 (E)**	**120.3 (F)**	**74.4 (E)**
NC 146 (Long Shoals Road) and I-26 westbound ramp (11) - Signalized	**65.2 (E)**	18.4 (B)	**196.0 (F)**	**59.4 (E)**	**200.2 (F)**	**71.7 (E)**
NC 146 (Long Shoals Road) and Skyland Drive/Schenck Parkway (12) - Signalized	27.7 (C)	38.4 (D)	**61.7 (E)**	**125.9 (F)**	**66.7 (E)**	**125.3 (F)**

* ICU Level of Service reported for unsignalized intersections

**Synchro states the computation can't be defined due to the high delay

Note that at the HE-0001 eastbound ramp intersection with the new connector road, the eastbound approach operates at **LOS F** in the 2045 Build scenario. The AM peak volume for the eastbound ramp approach is 506 vehicles. The maximum queue for the eastbound ramp in the AM peak is 300 feet (based on the average of 10 SimTraffic runs). The projected queue is contained within the 325 feet storage lane provided. Thus, the decision was made to leave this intersection as unsignalized for this analysis.

After completion of the initial analysis, NCDOT suggested using a DDI to connect the NC 191 Connector to I-26. Based on the comparison of operations between the standard diamond and the DDI, the interchange type chosen is not expected to substantially affect the analysis results at any other study area intersection. The following table provides a comparison of the analysis results from the standard diamond configuration, DDI with signalized ramp terminals, and a DDI with an unsignalized southbound off ramp terminal. (Note that, due to the differing ramp terminal configurations, ordinal directions are used in the ramp descriptions).

Table ES-5: DDI and Standard Diamond Comparison (using the left entrance/exit concept)

2045 Build Scenario	Left Entrance Exit					Diverging Diamond Interchange						Diverging Diamond Interchange - Unsignalized SB Off-Ramp					
Node #	Intersection	Approach	Lane Group	Level of Service (Delay) (sec/veh)		Node #	Intersection	Approach	Lane Group	Level of Service (Delay) (sec/veh)		Node #	Intersection	Approach	Lane Group	Level of Service (Delay) (sec/veh)	
				AM	PM					AM	PM					AM	PM
6*	HE-0001 SEB Ramp and NC 191 Connector (Unsignalized)	**Overall**				6	HE-0001 SB Off-Ramp and NC 191 Connector	**Overall**		**B (10.8)**	**A (6.2)**	6	HE-0001 SB Off-Ramp and NC 191 Connector	**Overall**		-	-
		EB	T	-	-			EB	T	-	-			EB	T	-	-
			R	-	-			WB	T	B (11.0)	A (6.8)			WB	T	-	-
		WB	TL	A (8.2)	A (8.7)			SB	R	C (24.0)	B (18.7)			SB	R	-	-
		SB	T	-	-												
			R	F (51.6)** A (8.6)***	D (25.5)** A (8.7)***												
7	HE-0001 NWB Ramp and NC 191 Connector (Signalized)	**Overall**		**B (17.8)**	**C (20.9)**	7	NC 191 Connector WB and NC 191 Connector EB	**Overall**		**B (19.7)**	**B (18.9)**	7	NC 191 Connector WB and NC 191 Connector EB	**Overall**		**B (15.9)**	**B (18.2)**
		EB	L	B (18.1)	B (19.0)			EB	T	B (12.7)	B (17.5)			EB	T	B (16.4)	B (17.4)
		NB	TL	B (17.5)	C (23.4)			WB	T	C (25.3)	C (20.9)			WB	T	B (15.6)	B (19.3)

Node #	Intersection	Approach	Lane Group	95th Percentile Queue (feet)**** (Synchro)		Node #	Intersection	Approach	Lane Group	95th Percentile Queue (feet) (Synchro)		Node #	Intersection	Approach	Lane Group	95th Percentile Queue (feet) (Synchro)	
				AM	PM					AM	PM					AM	PM
6*	HE-0001 SEB Ramp and NC 191 Connector (Unsignalized)	EB	T	-	-	6	HE-0001 SB Off-Ramp and NC 191 Connector	EB	T	0	0	6	HE-0001 SB Off-Ramp and NC 191 Connector	EB	T	-	-
			R	-	-			WB	T	m#70	35			WB	T	-	-
		WB	TL	0	0			SB	R	#285	222			SB	R	-	-
		SB	T	-	-												
			R	325	175												
7	HE-0001 NWB Ramp and NC 191 Connector (Signalized)	EB	L	174	245	7	NC 191 Connector WB and NC 191 Connector EB	EB	T	138	242	7	NC 191 Connector WB and NC 191 Connector EB	EB	T	170	242
		NB	TL	211	#221			WB	T	#281	201			WB	T	196	194

DocuSign Envelope ID: 5C03745C-4B01-4834-A65D-B77F558A4F46

Node #	Intersection	Approach	Lane Group	Max Queue (feet) (SimTraffic)		Node #	Intersection	Approach	Lane Group	Max Queue (feet) (SimTraffic)		Node #	Intersection	Approach	Lane Group	Max Queue (feet) (SimTraffic)	
				AM	PM					AM	PM					AM	PM
6*	HE-0001 SEB Ramp and NC 191 Connector (Unsignalized)	EB	T	-	49	6	HE-0001 SB Off-Ramp and NC 191 Connector	EB	T	88	220	6	HE-0001 SB Off-Ramp and NC 191 Connector	EB	T	93	153
			R	10	44			WB	T	126	111			WB	T	14	7
		WB	TL	5	12			SB	R	238	233			SB	R	4	9
		SB	T	12	18												
			R	265	189												
7	HE-0001 NWB Ramp and NC 191 Connector (Signalized)	EB	L	209	240	7	NC 191 Connector WB and NC 191 Connector EB	EB	T	80	80	7	NC 191 Connector WB and NC 191 Connector EB	EB	T	79	81
		NB	TL	225	240			WB	T	310	299			WB	T	239	264

Note: volume to capacity ratios (v/c) for all movements are less than 1.0

*LOS, Delay, and 95% Queue for unsignalized intersections are reported from HCM 6th edition results

**The HCM 6th edition result is based on stop-control while this movement actually runs under yield control

***SimTraffic delay based on the average of 10 runs (s

****95% Queue for unsignalized intersections is calculated as 95% Q (veh) (rounded up to nearest integer) * 25 ft

m - queuing is metered by upstream intersection

- indicates that the volume for the 95th percentile cycle exceeds capacity

DocuSign Envelope ID: 5C03745C-4B01-4834-A65D-B77F558A4F46

SIDRA (Roundabout Analysis)

In addition to the Synchro analysis performed on the local road network, the proposed roundabout (HE-0001 internal intersection) was analyzed in SIDRA. For the purpose of this IAR, only the 2045 Build scenario was analyzed.

The HE-0001 internal intersection roundabout was initially analyzed as a single lane roundabout. This version of the roundabout does not provide adequate operations. Next, bypass lanes were added for all approaches. While all movements operate at LOS D or better in the design year, one approach (west approach) experiences a degree of saturation of 0.88 in the AM peak (just over the recommended maximum of 0.85).

Table ES-6 2045 Build SIDRA Analysis

	Approaches								Overall Intersection
	South		East		North		West		
	Delay (LOS)	Deg of Sat.	LOS	Deg of Sat.	Delay (LOS)	Deg of Sat.	Delay (LOS)	Deg of Sat.	
AM	11.6 (B)	0.425	10.5 (B)	0.579	7.7 (A)	0.328	16.5 (C)	**0.877**	16.5 (C)
PM	31.1 (D)	0.790	9.4 (A)	0.589	17.0 (C)	0.714	24.7 (C)	0.790	18.3 (C)

Safety

A crash analysis was prepared for the study area roadways. Specific to I-26 in the study area, of the 1,359 total crashes, 932 (68.6%) were identified as rear end, slow or stop crashes. On an interstate facility, it is reasonable to assume that these are congestion-related crashes with the slowing of vehicles caused by over-capacity conditions on I-26 and ramp queues.

I-26 is currently being widened to an eight-lane facility (four lanes in each direction). This should increase the capacity of the facility and lessen the propensity for this crash type. Further, the analysis of the HE-0001 interchange with the Connector Road shows minimal queuing at the ramp junctions. Additional crash data is provided in Section 2.4 of this IAR.

NCDOT's predictive crash analysis modeling does show an increase in crashes for the left entrance/exit design as compared to the right entrance exit alternative of around 9 percent in the base year and 10 percent in 2045.

DocuSign Envelope ID: 5C03745C-4B01-4834-A65D-B77F558A4F46

Policy Point 2 (Access Type)
While there are multiple potential build scenarios being evaluated (right side entrance/exit, and left entrance/exit, both with a standard diamond and a DDI interchange option for the left entrance/exit configuration), all are intended to provide full access to the proposed HE-0001 connector road. The Connector Road is also intended to be a public facility.

Also, all appropriate design standards have been met, including the left side entrance/exit requirements as applicable. Specifically, the left exit/entrance requirements per AASHTO Greenbook 10.9.6.4.1 and 10.9.6.4.2 are met. Per Chapter 3.2, Table 3-1, Calculated and Design Sight Distance, the sight distance requirements for a left exit, specifically, are:

- 1st design curve @ 60 mph design speed – 570’ minimum
- 2nd design curve @ 50 mph design speed – 425’ minimum
- 3rd design curve @ 35 mph design speed – 250’ minimum

The proposed left exit design includes the following:

- 1st design curve @ 60 mph design speed – 570’
- 2nd design curve @ 50 mph design speed – 425’
- 3rd design curve @ 35 mph design speed – 910’

DocuSign Envelope ID: 5C03745C-4B01-4834-A65D-B77F558A4F46

Table of Contents

EXECUTIVE SUMMARY 1
1 SUMMARY 1
2 FHWA Policy Point 1 Discussion 3
2.1 FREEVAL Analysis 3
2.2 Synchro Analysis 29
2.3 SIDRA Analysis 48
2.4 Safety Evaluation 48
3 FHWA Policy Point 2 Discussion 56
4 Conclusions and Recommendations 56

Tables

Table 1: 2021 Existing AM Flow Rate (vph) 4
Table 2: 2021 Existing PM Flow Rate (vph) 5
Table 3: 2021 Build AM Flow Rate (vph) 7
Table 4: 2021 Build PM Flow Rate (vph) 8
Table 5: 2040 Build AM Flow Rate (vph) 9
Table 6: 2040 Build PM Flow Rate (vph) 10
Table 7: 2045 No-Build AM Flow Rate (vph) 11
Table 8: 2045 No-Build PM Flow Rate (vph) 12
Table 9: 2045 Build AM Flow Rate (vph) 13
Table 10: 2045 Build PM Flow Rate (vph) 14
Table 11: 2045 No-Build AM Peak Density and Level of Service - Eastbound 17
Table 12: 2045 No-Build AM Peak Density and Level of Service - Westbound 18
Table 13: 2045 No-Build PM Peak Density and Level of Service - Eastbound 19
Table 14: 2045 No-Build PM Peak Density and Level of Service - Westbound 20
Table 15: 2045 Build AM Peak Density and Level of Service - Eastbound 21
Table 16: 2045 Build AM Peak Density and Level of Service - Westbound 22
Table 17: 2045 Build PM Peak Density and Level of Service - Eastbound 23
Table 18: 2045 Build PM Peak Density and Level of Service - Westbound 24
Table 19: 2045 Build (Left Entrance/Exit) AM Peak Density and Level of Service - Westbound 25
Table 20: 2045 Build (Left Entrance/Exit) PM Peak Density and Level of Service - Westbound 26
Table 21: 2040 Build PM Peak Density and Level of Service - Eastbound 27
Table 22: FREEVAL LOS Summary 28
Table 23: Segment Description 28
Table 24: 2021 Existing AM Level of Service and Delay (in seconds) 31
Table 25: 2021 Existing PM Level of Service and Delay 32
Table 26: 2021 Build AM Level of Service and Delay (in seconds) 33
Table 27: 2021 Build PM Level of Service and Delay (in seconds) 34
Table 28: 2045 No-Build AM Level of Service and Delay (in seconds) 35

DocuSign Envelope ID: 5C03745C-4B01-4834-A65D-B77F558A4F46

Table 29: 2045 No-Build PM Level of Service and Delay (in seconds) 36
Table 30: 2045 Build AM Level of Service and Delay (in seconds) 38
Table 31: 2045 Build PM Level of Service and Delay (in seconds) 39
Table 32: Comparison of 2045 No-Build and Build AM Level of Service and Delay (in seconds) 40
Table 33: Comparison of 2045 No-Build and Build PM Level of Service and Delay (in seconds) 41
Table 34: Summary of Level of Service and Delay (in seconds) 43
Table 35: DDI and Standard Diamond Comparison 46
Table 36: 2045 Build SIDRA Analysis 48
Table 37: I-26 Section Crash Summary 49
Table 38: NC 191 (Brevard Road) Section Crash Summary 50
Table 39: NC 146 (Long Shoals Road) Section Crash Summary 51
Table 40: NC 191 (Brevard Road) and Blue Ridge Parkway Access Intersection Crash Summary 52
Table 41: Blue Ridge Parkway Access and Fredrick Law Olmstead Way Intersection Crash Summary 53
Table 42: 2021 Crashes by Facility Component - Base Year, Right Side Ramps 54
Table 43: 2021 Crashes by Facility Component - Base Year, Left Side Ramps 54
Table 44: Crashes by Facility Component - 2045 Future Year, Right Side Ramps 55
Table 45: Crashes by Facility Component - 2045 Future Year, Left Side Ramps 55

DocuSign Envelope ID: 5C03745C-4B01-4834-A65D-B77F558A4F46

Appendices

Appendix A – Figures

Appendix B – Meeting Minutes

Appendix C – Travel Demand Forecast

Appendix D – Traffic Count Data

Appendix E – Volume Calculations

Appendix F – FREEVAL Segment Length Calculations

Appendix G – Signal Plans and Timing Plans

Appendix H – NCDOT Crash Data

Appendix I – FREEVAL Issue

Appendix J – FREEVAL Results Contours

Appendix K – SIDRA

Appendix L – 2021 Existing Synchro Results

Appendix M – 2045 No-Build Synchro Results

Appendix N – 2021 Build Scenario 1 Synchro Results

Appendix O – 2021 Build Scenario 2 Synchro Results

Appendix P – 2045 Build Scenario 1 Synchro Results

Appendix Q – 2045 Build Scenario 2 Synchro Results

Appendix R – FHWA Interactive Highway Safety Design Model

Appendix S – Signing Plan

Appendix T – Comparison of Diverging Diamond Interchange (DDI) to the Left Entrance-Exit with Diamond Interchange Configuration

DocuSign Envelope ID: 5C03745C-4B01-4834-A65D-B77F558A4F46

1 SUMMARY

Three Oaks Engineering has been contracted by the North Carolina Department of Transportation (NCDOT), to develop an Interstate Access Report (IAR) for NCDOT State Transportation Improvement Program (STIP) Project HE-0001. This IAR addresses the potential addition of an interchange located between the existing interchanges of I-26 with NC 191 (Brevard Road) and NC 146 (Long Shoals Road) and a new connector road to be constructed from that interchange to tie into the existing intersection of NC 191 (Brevard Road) and the access to the Blue Ridge Parkway.

The study area is bounded by the NC 191 (Brevard Road) interchange to the north, I-26 to the east, NC 191 (Brevard Road) to the west, and the NC 146 (Long Shoals Road) interchange to the south. **Figure 1,** found in **Appendix A**, shows the project study area for the IAR.

At the time this report was developed, I-26 was under construction as the I-4400/I-4700 STIP project widened the freeway from four lanes (two lanes in each direction) to eight lanes (four lanes in each direction). Also, the I-5304 STIP project relocated the NC 191 (Brevard Road) westbound off ramp to provide more storage and additional spacing between the signalized ramp terminal intersections. I-5304 also relocated the north leg from the NC 191 (Brevard Road) eastbound ramp terminal intersection to the west, converting the intersection to a three-leg configuration.

Also, U-3403B proposes to widen NC 191 (Brevard Road) from Ledbetter Road to north of the Blue Ridge Parkway. While this project will not affect I-26, it does affect the NC 191 (Brevard Road) corridor that was analyzed as part of the Synchro analysis for HE-0001. Currently, there are two primary alternatives for the widening of NC 191 (Brevard Road). The first is to widen along the existing corridor. The second option is to construct a four-lane roadway with the northbound lanes on the east side of French Broad River in the HE-0001 analysis area.

As of the development of the HE-0001 analysis, no decision has been made as to which alternative will be chosen for U-3403B. The HE-0001 analysis is based on Alternative 1 (widen along existing corridor). This alternative was selected as it provides a reasonable assessment of local operations should the HE-0001 interchange be constructed. Regardless of which alternative is selected, the overall operations would be similar as it relates to the HE-0001 IAR.

During the HE-0001 Interchange Access Report Scoping Meeting, held March 29, 2021, the team decided that the 2021 Existing scenario would include the improvements made by I-4400/I-4700 and I-5304. Also, the team decided to model HE-0001 in FREEVAL for the freeway facilities and Synchro for the ramp terminals and other surface intersections. The meeting summary from the scoping meeting can be found in **Appendix B.**

There are multiple interchange configurations being considered for HE-0001. The first is a standard diamond interchange with a new access road that travels west from the interchange to connect with NC 191 (Brevard Road) at the existing intersection with the Blue Ridge Parkway access. Since the owner of the property to the east of the proposed interchange has stated that

DocuSign Envelope ID: 5C03745C-4B01-4834-A65D-B77F558A4F46

there is no plan to develop any of that land (as it is the Historic Biltmore property), there will be no access nor connection to the east of the HE-0001 interchange. The second option, developed to reduce the amount of impact to the historic Biltmore property, is to have the westbound on and off ramps connect on the left (west) side of the freeway. With the proposed interchange being in the bifurcated section of I-26, there is the potential of constructing the ramps on the left side, in between the westbound and eastbound freeway segments.

Also, after the completion of the initial IAR, NCDOT requested that a Diverging Diamond Interchange (DDI) option be evaluated. Since the DDI would essentially operate the same with either the right entrance-exit configuration or the left entrance-exit option, the DDI was only analyzed with the left entrance-exit configuration. Since the DDI option was added after the submittal of the initial IAR, the DDI ramp terminal analysis data is included in **Appendix T** of this report. The ramp terminal intersections are the only analysis points that are expected to differ from the original IAR and the interchange type chosen is not expected to substantially affect the analysis results at any other study area intersection.

With all options, a new connector road will be constructed from the new interchange west to NC 191, connecting as the west leg of the existing intersection of NC 191 (Brevard Road) and the Blue Ridge Parkway Access. **Figure 3** – 2021 Build Laneage and **Figure 5** – 2045 Build Laneage provide more information regarding the new connector and revised intersections.

The study area was determined and agreed upon during the March 29, 2021 IAR Scoping Meeting (meeting summary located in **Appendix B**). This study includes the following intersections (also shown on **Figure 1**):

1. NC 191 (Brevard Road) and access road between Hampton Inn and Petco
2. NC 191 (Brevard Road) and I-26 eastbound ramps (note that I-5304 converted this intersection to a three-leg configuration)
3. NC 191 (Brevard Road) and I-26 westbound Ramps (note that the eastern ramp terminal intersection has been relocated as part of I-5304)
4. NC 146 (Long Shoals Road) and Clayton Road
5. NC 146 (Long Shoals Road) and Ledbetter Road (unsignalized)
6. NC 146 (Long Shoals Road) and I-26 Single Point interchange (includes 2 unsignalized intersections and 1 signalized single point intersection) (note that the eastern ramp access will be signalized and pulled in as part of I-4400/I-4700 and analyzed as such in all scenarios)
7. NC 146 (Long Shoals Road) and Schenck Parkway/Skyland Inn Drive (note that this intersection is being modified as part of I-4700 and the revised configuration will be analyzed for all scenarios)
8. HE-0001 westbound ramp terminal (build scenarios only)
9. HE-0001 eastbound ramp terminal (build scenarios only)
10. HE-0001 Connector Road and internal access (roundabout)
11. HE-0001 Connector Road and NC 191 (Brevard Road)/Blue Ridge Parkway Access
12. Blue Ridge Parkway Access and Fredrick Law Olmstead Way (Unsignalized)

DocuSign Envelope ID: 5C03745C-4B01-4834-A65D-B77F558A4F46

2 FHWA POLICY POINT 1 DISCUSSION

"An operational and safety analysis has concluded that the proposed change in access does not have a significant adverse impact on the safety and operation of the Interstate facility (which includes mainline lanes, existing, new, or modified ramps, and ramp intersections with crossroad) or on the local street network based on both the current and the planned future traffic projections. The analysis should, particularly in urbanized areas, include at least the first adjacent existing or proposed interchange on either side of the proposed change in access (Title 23, Code of Federal Regulations (CFR), paragraphs 625.2(a), 655.603(d) and 771.111(f)). The crossroads and the local street network, to at least the first major intersection on either side of the proposed change in access, should be included in this analysis to the extent necessary to fully evaluate the safety and operational impacts that the proposed change in access and other transportation improvements may have on the local street network (23 CFR 625.2(a) and 655.603(d)). Requests for a proposed change in access should include a description and assessment of the impacts and ability of the proposed changes to safely and efficiently collect, distribute, and accommodate traffic on the Interstate facility, ramps, intersection of ramps with crossroad, and local street network (23 CFR 625.2(a) and 655.603(d)). Each request should also include a conceptual plan of the type and location of the signs proposed to support each design alternative (23 U.S.C. 109(d) and 23 CFR 655.603(d))."

FREEVAL (specifically, FREEVAL-NC), Synchro, and SIDRA were used to compare the operations of the study area facilities with and without the proposed interchange. The following section provides a summary of the analysis procedure and the results. Additional detail can be found in the attached appendices.

2.1 FREEVAL Analysis

FREEVAL was used to analyze the freeway segments within the study area. As reported on the product's website, www.freeval.org, "FREEVAL provides freeway planning-level capacity analyses based on HCM6 for undersaturated and oversaturated conditions." Further, the website states that "The FREEVAL-NC Freeway Segmentation Database contains geometric and demand information for North Carolina freeways, interstate, and non-interstate, which can be imported into the FREEVAL-NC computational engine."

FREEVAL Analysis Volume Development

FREEVAL utilizes hourly flow rates and volume curves to calculate the volume for each time period for each segment. While FREEVAL has pre-loaded demand curves, project specific curves were developed for the HE-0001 analysis.

The volume development process began with the Travel Demand Forecast developed for the project (See **Appendix C**). The forecast provides current traffic volumes (2021) as well as forecasted values for the design year (2045). The volumes in the forecast are in the form of Average Annual Daily Traffic (AADT), but the forecast also provides factors that allow the AADT to be converted to AM and PM peak hour volumes.

DocuSign Envelope ID: 5C03745C-4B01-4834-A65D-B77F558A4F46

Since the FREEVAL analysis was performed for 15-minute increments for the period from 6:30 – 9:30 AM as well as 3:30 – 6:30 PM, the forecast data had to be further stratified into 15-minute time periods matching the analysis periods. This was accomplished by comparing traffic counts taken on April 20, 2021 (See **Appendix D** for traffic count data) to the forecasted peak hour volumes for each project segment. A set of curves was developed for each FREEVAL analysis segment based on the count data and forecast that calculated the 15-minute volume from the forecast. More detail on the volume development process can be found in **Appendix E**. This approach was explained to NCDOT and FHWA and both agreed to its use in developing the analysis volumes.

Note that after the completion of the initial submittal, NCDOT asked that a DDI interchange be evaluated. With operations of the ramp terminals being so similar, it is assumed that the selection of the specific interchange type will not have a discernable effect on the overall operations.

The following tables provide the flow rate in vehicles per hour used in the FREEVAL analysis. Note that while each analysis period is 15 minutes, FREEVAL requires volumes to be entered in an hourly rate equivalent. So, each 15-minute volume is multiplied by four for FREEVAL entry.

Table 1: 2021 Existing AM Flow Rate (vph)

	Eastbound				
	I-26 Entering	**NC 191 Diverge**	**NC 191 Merge**	**NC 146 Diverge**	**NC 146 Merge**
6:30	2840	309	152	409	215
6:45	2614	313	197	693	219
7:00	2546	270	279	477	227
7:15	3395	245	258	809	316
7:30	3944	356	303	846	500
7:45	3877	438	320	998	445
8:00	3236	391	328	713	375
8:15	3303	472	238	577	391
8:30	3202	352	217	585	418
8:45	3274	373	287	641	406
9:00	2816	288	172	401	395
9:15	2787	373	225	441	383

DocuSign Envelope ID: 5C03745C-4B01-4834-A65D-B77F558A4F46

Westbound					
	I-26 Entering	NC 146 Diverge	NC 146 Merge	NC 191 Diverge	NC 191 Merge
6:30	2052	416	223	223	111
6:45	2427	503	260	281	174
7:00	2465	591	487	262	206
7:15	3193	648	586	335	269
7:30	3540	757	571	373	333
7:45	3850	876	534	423	343
8:00	3334	797	494	312	291
8:15	3066	595	479	254	280
8:30	3014	617	436	250	306
8:45	2747	578	388	212	338
9:00	2625	495	340	204	254
9:15	2554	438	337	196	280

Table 2: 2021 Existing PM Flow Rate (vph)

Eastbound					
	I-26 Entering	NC 191 Diverge	NC 191 Merge	NC 146 Diverge	NC 146 Merge
3:30	3380	349	449	583	585
3:45	4094	455	374	782	657
4:00	3910	471	409	659	594
4:15	4056	467	286	824	626
4:30	3764	417	365	796	508
4:45	3759	396	379	654	716
5:00	3991	476	467	606	671
5:15	4397	387	431	763	730
5:30	3840	370	374	682	626
5:45	3672	459	264	715	571
6:00	3039	328	269	469	517
6:15	3104	345	220	545	476

DocuSign Envelope ID: 5C03745C-4B01-4834-A65D-B77F558A4F46

Westbound					
	I-26 Entering	NC 146 Diverge	NC 146 Merge	NC 191 Diverge	NC 191 Merge
3:30	3732	539	777	333	448
3:45	3829	568	664	345	391
4:00	3556	529	718	284	466
4:15	3797	673	546	304	509
4:30	3320	529	723	272	325
4:45	3481	495	496	357	405
5:00	3545	572	811	422	466
5:15	3524	606	782	402	485
5:30	3315	529	629	309	466
5:45	3213	495	728	231	377
6:00	2993	558	673	248	382
6:15	2967	399	388	215	292

DocuSign Envelope ID: 5C03745C-4B01-4834-A65D-B77F558A4F46

Table 3: 2021 Build AM Flow Rate (vph)

Eastbound							
	I-26 Entering	NC 191 Diverge	NC 191 Merge	HE-0001 Diverge	HE-0001 Merge	NC 146 Diverge	NC 146 Merge
6:30	2882	257	130	145	64	429	211
6:45	2652	261	168	186	74	728	215
7:00	2583	225	238	144	93	501	223
7:15	3444	204	221	182	102	850	311
7:30	4002	297	259	219	138	888	491
7:45	3934	365	273	263	134	1048	437
8:00	3283	325	280	211	125	749	368
8:15	3351	393	203	216	108	606	384
8:30	3249	293	186	182	107	614	411
8:45	3322	311	245	196	121	673	399
9:00	2857	240	147	138	94	421	388
9:15	2828	311	193	168	104	463	376

Westbound							
	I-26 Entering	NC 146 Diverge	NC 146 Merge	HE-0001 Diverge	HE-0001 Merge	NC 191 Diverge	NC 191 Merge
6:30	2067	410	235	123	51	200	89
6:45	2445	496	273	151	69	251	140
7:00	2483	582	512	158	103	234	165
7:15	3216	638	616	187	129	300	216
7:30	3566	746	600	214	140	334	267
7:45	3878	862	562	244	138	379	276
8:00	3358	785	519	201	122	279	233
8:15	3088	586	504	156	118	227	225
8:30	3036	608	458	158	118	224	246
8:45	2766	569	408	142	119	189	271
9:00	2644	487	358	128	95	183	203
9:15	2573	431	354	118	100	176	225

DocuSign Envelope ID: 5C03745C-4B01-4834-A65D-B77F558A4F46

Table 4: 2021 Build PM Flow Rate (vph)

Eastbound							
	I-26 Entering	NC 191 Diverge	NC 191 Merge	HE-0001 Diverge	HE-0001 Merge	NC 146 Diverge	NC 146 Merge
6:30	3227	256	177	115	111	355	308
6:45	2969	260	229	147	129	602	314
7:00	2892	224	325	114	162	414	325
7:15	3857	203	301	144	177	703	454
7:30	4481	295	354	174	240	734	717
7:45	4404	363	373	209	232	867	638
8:00	3676	324	382	167	218	620	538
8:15	3753	391	277	171	187	501	560
8:30	3637	292	253	144	186	508	599
8:45	3720	309	334	155	210	557	582
9:00	3199	238	201	109	164	348	565
9:15	3166	309	263	134	181	383	549

Westbound							
	I-26 Entering	NC 146 Diverge	NC 146 Merge	HE-0001 Diverge	HE-0001 Merge	NC 191 Diverge	NC 191 Merge
6:30	2054	312	325	97	88	193	134
6:45	2429	378	379	120	119	243	210
7:00	2467	444	709	126	179	227	249
7:15	3195	487	853	149	223	290	325
7:30	3543	569	832	170	243	323	402
7:45	3853	658	779	194	239	367	414
8:00	3336	599	720	160	211	270	351
8:15	3069	447	699	124	204	220	338
8:30	3017	464	635	126	205	217	370
8:45	2749	434	565	113	206	183	408
9:00	2627	372	496	102	165	177	306
9:15	2556	329	491	94	174	170	338

DocuSign Envelope ID: 5C03745C-4B01-4834-A65D-B77F558A4F46

Table 5: 2040 Build AM Flow Rate (vph)

Eastbound							
	I-26 Entering	NC 191 Diverge	NC 191 Merge	HE-0001 Diverge	HE-0001 Merge	NC 146 Diverge	NC 146 Merge
6:30	3953	275	196	267	132	624	264
6:45	3638	279	254	341	153	1058	269
7:00	3544	241	360	264	193	727	279
7:15	4725	218	333	334	210	1235	390
7:30	5490	317	392	402	284	1290	616
7:45	5396	389	413	484	276	1522	548
8:00	4503	347	423	387	259	1088	462
8:15	4597	420	307	396	223	880	481
8:30	4456	313	280	334	221	893	515
8:45	4557	332	370	360	249	978	500
9:00	3920	256	222	254	194	611	486
9:15	3879	332	291	310	215	672	471

Westbound							
	I-26 Entering	NC 146 Diverge	NC 146 Merge	HE-0001 Diverge	HE-0001 Merge	NC 191 Diverge	NC 191 Merge
6:30	2826	522	342	209	113	305	93
6:45	3344	632	398	259	153	383	146
7:00	3395	742	746	270	230	357	173
7:15	4398	813	898	320	287	457	226
7:30	4876	951	875	365	312	509	279
7:45	5303	1099	819	418	307	578	288
8:00	4592	1000	758	344	271	425	244
8:15	4223	747	735	267	262	347	235
8:30	4152	775	668	271	263	341	257
8:45	3783	725	595	242	264	289	283
9:00	3615	621	522	219	212	278	213
9:15	3518	549	516	201	223	268	235

DocuSign Envelope ID: 5C03745C-4B01-4834-A65D-B77F558A4F46

Table 6: 2040 Build PM Flow Rate (vph)

Eastbound							
	I-26 Entering	NC 191 Diverge	NC 191 Merge	HE-0001 Diverge	HE-0001 Merge	NC 146 Diverge	NC 146 Merge
6:30	4428	271	265	228	203	518	388
6:45	4074	275	344	291	236	879	395
7:00	3969	237	487	225	297	604	409
7:15	5292	215	452	284	324	1026	572
7:30	6149	313	530	343	438	1071	903
7:45	6044	384	559	412	425	1264	805
8:00	5044	343	573	330	399	904	678
8:15	5149	414	416	338	343	731	706
8:30	4991	309	380	285	341	741	755
8:45	5104	328	502	307	384	812	734
9:00	4390	252	301	216	299	508	713
9:15	4345	328	394	264	331	559	692

Westbound							
	I-26 Entering	NC 146 Diverge	NC 146 Merge	HE-0001 Diverge	HE-0001 Merge	NC 191 Diverge	NC 191 Merge
6:30	2807	391	477	179	173	294	139
6:45	3321	473	555	221	234	370	218
7:00	3372	555	1039	231	351	345	258
7:15	4367	608	1250	273	438	441	337
7:30	4843	711	1219	312	477	492	417
7:45	5267	822	1141	357	470	558	430
8:00	4560	748	1055	294	415	411	364
8:15	4194	559	1023	228	401	335	351
8:30	4123	580	930	231	402	330	384
8:45	3757	543	828	207	404	279	423
9:00	3590	465	727	187	324	269	318
9:15	3494	411	719	172	341	259	351

DocuSign Envelope ID: 5C03745C-4B01-4834-A65D-B77F558A4F46

Table 7: 2045 No-Build AM Flow Rate (vph)

Eastbound					
	I-26 Entering	NC 191 Diverge	NC 191 Merge	NC 146 Diverge	NC 146 Merge
6:30	4206	487	217	601	317
6:45	3870	494	281	1020	322
7:00	3770	426	399	701	334
7:15	5027	386	369	1191	466
7:30	5841	562	434	1244	737
7:45	5741	690	457	1468	656
8:00	4791	616	469	1049	553
8:15	4891	744	340	849	576
8:30	4741	555	311	861	616
8:45	4849	589	410	943	599
9:00	4170	453	246	589	581
9:15	4127	589	322	648	564

Westbound					
	I-26 Entering	NC 146 Diverge	NC 146 Merge	NC 191 Diverge	NC 191 Merge
6:30	3001	609	330	319	175
6:45	3550	737	384	401	275
7:00	3605	866	719	374	325
7:15	4670	949	864	478	425
7:30	5178	1109	843	533	524
7:45	5631	1282	789	604	541
8:00	4876	1167	729	445	458
8:15	4484	872	708	363	441
8:30	4409	904	643	357	483
8:45	4017	846	573	302	533
9:00	3839	724	502	291	400
9:15	3736	641	497	280	441

DocuSign Envelope ID: 5C03745C-4B01-4834-A65D-B77F558A4F46

Table 8: 2045 No-Build PM Flow Rate (vph)

Eastbound					
	I-26 Entering	NC 191 Diverge	NC 191 Merge	NC 146 Diverge	NC 146 Merge
3:30	5002	550	644	860	859
3:45	6058	716	536	1154	966
4:00	5786	742	587	972	872
4:15	6002	736	410	1217	919
4:30	5570	656	524	1175	746
4:45	5562	623	543	965	1052
5:00	5906	749	669	895	986
5:15	6507	610	618	1126	1072
5:30	5682	583	536	1007	919
5:45	5434	722	379	1056	839
6:00	4498	517	385	692	759
6:15	4594	543	316	804	699

Westbound					
	I-26 Entering	NC 146 Diverge	NC 146 Merge	NC 191 Diverge	NC 191 Merge
3:30	5462	792	1144	476	705
3:45	5603	834	977	493	616
4:00	5204	778	1057	406	734
4:15	5556	990	804	435	801
4:30	4859	778	1064	389	512
4:45	5094	728	731	511	638
5:00	5188	842	1194	603	734
5:15	5157	891	1151	574	764
5:30	4851	778	927	441	734
5:45	4702	728	1071	331	593
6:00	4381	820	992	354	601
6:15	4342	587	572	307	460

DocuSign Envelope ID: 5C03745C-4B01-4834-A65D-B77F558A4F46

Table 9: 2045 Build AM Flow Rate (vph)

Eastbound							
	I-26 Entering	NC 191 Diverge	NC 191 Merge	HE-0001 Diverge	HE-0001 Merge	NC 146 Diverge	NC 146 Merge
6:30	4235	279	213	299	150	675	279
6:45	3897	283	276	382	174	1144	284
7:00	3796	244	391	295	219	787	294
7:15	5061	221	362	374	238	1336	411
7:30	5881	322	426	450	323	1395	649
7:45	5780	396	449	542	313	1647	578
8:00	4824	353	460	434	294	1177	487
8:15	4925	427	334	444	253	952	507
8:30	4774	318	305	374	251	966	542
8:45	4882	337	403	403	283	1058	527
9:00	4199	260	242	284	220	661	512
9:15	4156	337	316	347	244	727	497

Westbound							
	I-26 Entering	NC 146 Diverge	NC 146 Merge	HE-0001 Diverge	HE-0001 Merge	NC 191 Diverge	NC 191 Merge
6:30	3026	552	371	232	130	332	94
6:45	3580	668	431	287	175	418	147
7:00	3635	784	808	300	263	389	174
7:15	4708	859	972	355	328	498	228
7:30	5221	1004	948	405	358	556	281
7:45	5678	1161	887	463	352	630	290
8:00	4916	1057	820	381	311	464	245
8:15	4521	790	796	297	300	378	236
8:30	4445	819	723	300	301	372	259
8:45	4051	766	644	269	303	315	286
9:00	3871	656	565	243	243	304	214
9:15	3767	581	559	223	256	292	236

DocuSign Envelope ID: 5C03745C-4B01-4834-A65D-B77F558A4F46

Table 10: 2045 Build PM Flow Rate (vph)

Eastbound							
	I-26 Entering	NC 191 Diverge	NC 191 Merge	HE-0001 Diverge	HE-0001 Merge	NC 146 Diverge	NC 146 Merge
3:30	4744	276	289	257	228	561	409
3:45	4366	279	375	328	265	951	417
4:00	4253	241	531	254	332	654	431
4:15	5671	218	492	321	362	1111	603
4:30	6589	318	578	387	491	1160	952
4:45	6476	390	609	466	476	1369	848
5:00	5405	348	624	373	446	979	714
5:15	5518	421	453	381	384	792	744
5:30	5348	314	414	322	382	803	796
5:45	5469	333	546	346	430	880	774
6:00	4704	256	328	244	335	550	751
6:15	4656	333	429	298	371	605	729

Westbound							
	I-26 Entering	NC 146 Diverge	NC 146 Merge	HE-0001 Diverge	HE-0001 Merge	NC 191 Diverge	NC 191 Merge
3:30	3005	411	516	200	195	320	140
3:45	3555	498	601	248	264	403	221
4:00	3610	584	1126	259	397	376	261
4:15	4676	641	1354	306	495	481	341
4:30	5185	749	1321	349	539	536	421
4:45	5639	866	1236	400	530	608	434
5:00	4882	788	1143	329	468	448	368
5:15	4490	589	1109	256	453	365	354
5:30	4415	610	1007	259	454	359	388
5:45	4023	571	897	232	457	304	428
6:00	3844	489	787	209	366	293	321
6:15	3741	433	779	193	385	282	354

DocuSign Envelope ID: 5C03745C-4B01-4834-A65D-B77F558A4F46

2021 Existing FREEVAL Network Development

The 2021 Existing network was developed by importing the segment data from FREEVAL-NC. The segment distances from the FREEVAL database were then reviewed and were determined to be reasonable. Note that the ramp merge and diverge segment distances for the westbound diverge and merge were not adjusted to match the exact location resulting from the I-4400/I-4700 project. Since these ramps are at the edge of the model, and I-4400/I-4700 provides for a longer basic segment, this change has no effect on the FREEVAL analysis. As noted above, the 2021 Existing network was to include the improvements constructed under I-4400/I-4700. As such, the I-26 mainline was revised to have 4 lanes per direction for this scenario. Truck data from the travel demand forecast for this project (located in **Appendix C**) was then entered into FREEVAL. Also, the driver capacity adjustment factor was changed to 0.95 to account for drivers unfamiliar with the area and to be consistent with other analyses in this area. **Figure 2** provides the 2021 Existing Laneage assumed for this analysis.

Next, the volumes for each segment in each analysis period were entered. Additional discussion on volume development is provided below. With the network coded and volume data entered, FREEVAL then calculates speeds, density, and level of service based on Highway Capacity Manual (HCM) methodologies. A summary of the FREEVAL results is provided below.

2045 No-Build FREEVAL Network Development

The 2045 No-Build network represents the expected conditions in 2045 including the construction of all projects from fiscally constrained plans but without the HE-0001 interchange. The laneage in the 2045 No-Build FREEVAL network, shown in **Figure 2**, is the same as the 2021 Existing network. Since the improvements associated with I-4400/I-4700 were entered into the 2021 scenario, and there were no other projects that affect I-26 in this area, no other changes were required to develop this scenario. 2045 volumes were input into FREEVAL in order to evaluate the future conditions. A discussion of the volume development and summary of the output are provided below.

2021 Base Year Build FREEVAL Network Development

Build networks were developed for both the base year and future year so that the interchange alternatives could be evaluated. There are two build scenarios for this project. In one, a standard diamond interchange would be constructed providing access to a new connector road that runs from I-26 west to NC 191 (Brevard Road). This configuration is shown in **Figure 3**. A second design option of that interchange was also developed and is shown in **Figure 4.** In the second, referred to as “Build – Left Entrance/Exit” the westbound ramps diverge and merge from the left (west) side of I-26.

To create each scenario, new segments were added to the 2021 Existing model. The segment lengths for the existing ramps were unchanged from the 2021 Existing model. The segments lengths for the new ramps were assumed to be 1,500 feet for both merge and diverge segments since that is the defined HCM influence area of ramps on freeways. A basic freeway segment of 2,500 feet was assumed between the merge and diverge segments. Next, the basic freeway segment between the existing interchanges was split into two, with the segment lengths being

DocuSign Envelope ID: 5C03745C-4B01-4834-A65D-B77F558A4F46

calculated by subtracting the new segment lengths from the original distance. Detailed segment length calculations are included in **Appendix F**.

The segment volumes corresponding with the Base Year Build scenario were then entered into FREEVAL to complete the analysis. Note that the forecast assumes the same mainline and ramp volumes for both Build options (right entrance/exit and left entrance/exit). A discussion of the volume development and summary of the output are provided below.

2045 Future Year Build FREEVAL Network Development

The 2045 Build networks are the same as the 2021 Build networks, as there are no other projects that affect I-26 through the study area. These networks are shown in **Figure 3** and **Figure 4.** The segment volumes corresponding with the 2045 Future Year Build scenario were then entered into FREEVAL to complete the analysis. Note that the forecast assumes the same mainline and ramp volumes for all Build options (diamond interchange with the right entrance/exit configuration and both a standard diamond and DDI for the left entrance/exit configuration). A discussion of the volume development and summary of the output are provided below.

FREEVAL Results

The FREEVAL analysis shows that all segments in both the 2021 Existing and 2045 No-Build scenarios operate at LOS D or better in all time periods. The 2021 Base Year Build and 2021 Base Year Build (Left Entrance/Exit) scenarios also operate at LOS D or better for all segments in all time periods. The 2045 Build and 2045 Build (Left Entrance/Exit) scenarios operate at LOS D or better for all segments except in one time period. In the 4:30-4:45 PM interval, I-26 between NC 191 (Brevard Road) and the new interchange (basic freeway, Segment 5), I-26 between the new interchange and NC 146 (Long Shoals Road) interchange (basic freeway, Segment 9), and I-26 southeast of the NC 146 (Long Shoals Road) interchange (basic freeway Segment 13) operate at LOS E. Each location is just over the 35 passenger cars per mile per lane (pc/mi/ln) density threshold for LOS E . Segment 5 has a density of 36.3 pc/mi/ln, Segment 9 has a density of 37.4 pc/mi/ln and Segment 13 has a density of 35.3 pc/mi/ln in that time period (results are the same for the Build and the Build - Left Entrance/Exit options). Note that the FREEVAL density and level of service is essentially the same for Build and Build - Left Entrance/Exit, with the only difference being that segment 6 (HE-0001 diverge segment) experiences densities that are 0.1 pc/mi/ln higher in the Build - Left Entrance/Exit scenario.

Note that Three Oaks noted an inconsistency in FREEVAL LOS reporting as compared to the density shown. This issue is discussed in more detail in **Appendix I**.

The following section provides the 2045 No-Build and 2045 Build FREEVAL output in both level of service (based on density in pc/mi/ln) and speeds (in miles per hour (mph)). All FREEVAL results can be found in **Appendix J** of the report. The colors correspond to project operations with darker green being the best operations and as they worsen the colors transition to yellow, to orange, and then to dark red for the worst operations.

DocuSign Envelope ID: 5C03745C-4B01-4834-A65D-B77F558A4F46

2045 No-Build

Table 11: 2045 No-Build AM Peak Density and Level of Service - Eastbound

Density (pc/mi/ln)

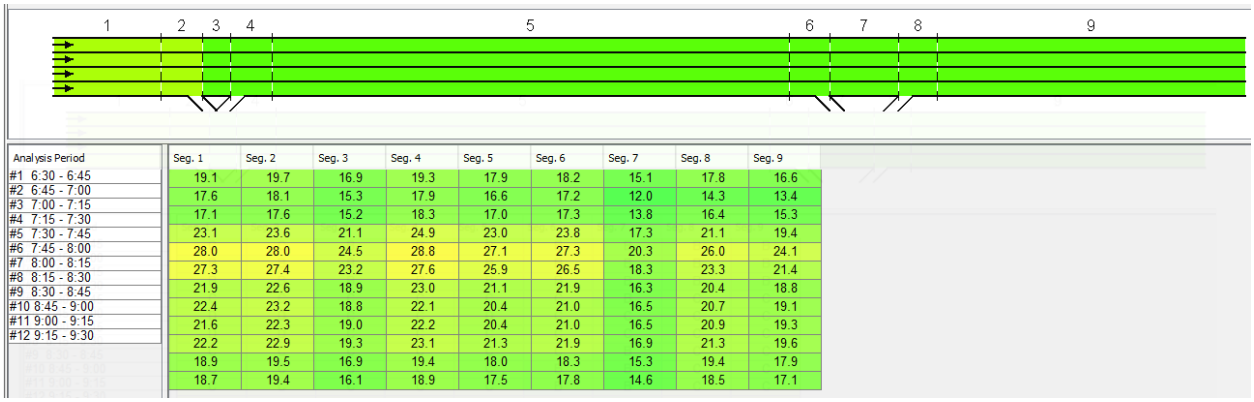

Analysis Period	Seg. 1	Seg. 2	Seg. 3	Seg. 4	Seg. 5	Seg. 6	Seg. 7	Seg. 8	Seg. 9
#1 6:30 - 6:45	19.1	19.7	16.9	19.3	17.9	18.2	15.1	17.8	16.6
#2 6:45 - 7:00	17.6	18.1	15.3	17.9	16.6	17.2	12.0	14.3	13.4
#3 7:00 - 7:15	17.1	17.6	15.2	18.3	17.0	17.3	13.8	16.4	15.3
#4 7:15 - 7:30	23.1	23.6	21.1	24.9	23.0	23.8	17.3	21.1	19.4
#5 7:30 - 7:45	28.0	28.0	24.5	28.8	27.1	27.3	20.3	26.0	24.1
#6 7:45 - 8:00	27.3	27.4	23.2	27.6	25.9	26.5	18.3	23.3	21.4
#7 8:00 - 8:15	21.9	22.6	18.9	23.0	21.1	21.9	16.3	20.4	18.8
#8 8:15 - 8:30	22.4	23.2	18.8	22.1	20.4	21.0	16.5	20.7	19.1
#9 8:30 - 8:45	21.6	22.3	19.0	22.2	20.4	21.0	16.5	20.9	19.3
#10 8:45 - 9:00	22.2	22.9	19.3	23.1	21.3	21.9	16.9	21.3	19.6
#11 9:00 - 9:15	18.9	19.5	16.9	19.4	18.0	18.3	15.3	19.4	17.9
#12 9:15 - 9:30	18.7	19.4	16.1	18.9	17.5	17.8	14.6	18.5	17.1

LOS

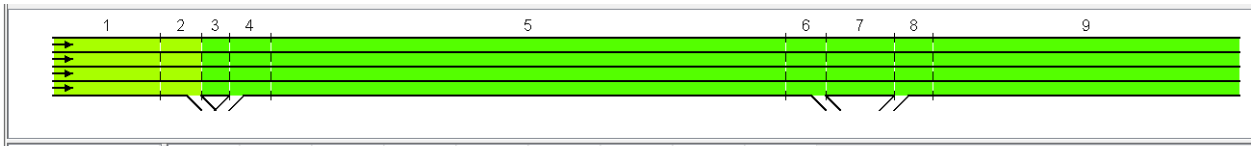

Analysis Period	Seg. 1	Seg. 2	Seg. 3	Seg. 4	Seg. 5	Seg. 6	Seg. 7	Seg. 8	Seg. 9
#1 6:30 - 6:45	C	C	B	B	B	B	B	B	B
#2 6:45 - 7:00	B	B	B	B	B	B	B	B	B
#3 7:00 - 7:15	B	B	B	B	B	B	B	B	B
#4 7:15 - 7:30	C	C	C	C	C	C	B	C	C
#5 7:30 - 7:45	D	D	C	C	D	C	C	C	C
#6 7:45 - 8:00	D	D	C	C	C	C	C	C	C
#7 8:00 - 8:15	C	C	C	C	C	C	B	C	C
#8 8:15 - 8:30	C	C	C	C	C	B	B	C	C
#9 8:30 - 8:45	C	C	C	C	C	B	B	C	C
#10 8:45 - 9:00	C	C	C	C	C	C	B	C	C
#11 9:00 - 9:15	C	C	B	B	B	B	B	B	B
#12 9:15 - 9:30	C	C	B	B	B	B	B	B	B

DocuSign Envelope ID: 5C03745C-4B01-4834-A65D-B77F558A4F46

Table 12: 2045 No-Build AM Peak Density and Level of Service - Westbound

Density (pc/mi/ln)

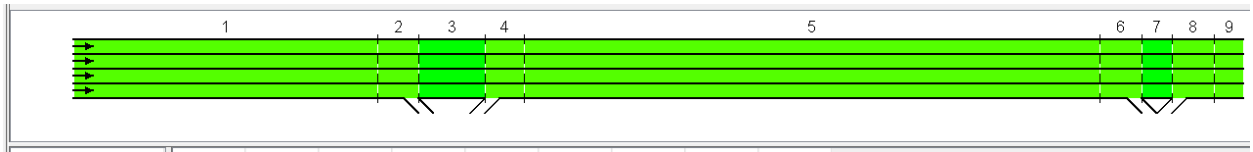

Analysis Period	Seg. 1	Seg. 2	Seg. 3	Seg. 4	Seg. 5	Seg. 6	Seg. 7	Seg. 8	Seg. 9
#1 6:30 - 6:45	13.6	14.2	10.9	13.1	12.4	12.6	10.9	12.4	11.7
#2 6:45 - 7:00	16.1	16.8	12.8	15.5	14.5	14.9	12.7	14.9	13.9
#3 7:00 - 7:15	16.4	17.2	12.4	16.9	15.7	16.1	14.0	16.6	15.5
#4 7:15 - 7:30	21.3	22.4	16.9	22.7	20.9	21.5	18.6	22.4	20.6
#5 7:30 - 7:45	23.9	25.0	18.5	24.4	22.5	23.2	19.9	24.4	22.4
#6 7:45 - 8:00	26.6	27.4	19.7	25.6	23.7	24.3	20.6	25.3	23.4
#7 8:00 - 8:15	22.3	23.6	16.8	21.9	20.2	20.8	18.1	22.0	20.2
#8 8:15 - 8:30	20.4	21.4	16.4	21.3	19.6	20.2	18.0	21.7	20.0
#9 8:30 - 8:45	20.0	21.1	15.9	20.4	18.8	19.3	17.2	21.0	19.4
#10 8:45 - 9:00	18.2	19.1	14.4	18.3	17.0	17.4	15.6	19.5	18.0
#11 9:00 - 9:15	17.4	18.2	14.1	17.7	16.4	16.7	15.1	18.2	16.9
#12 9:15 - 9:30	17.0	17.6	14.0	17.5	16.3	16.6	15.0	18.4	17.0

LOS

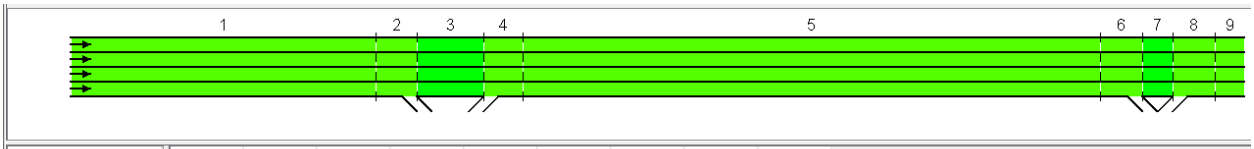

Analysis Period	Seg. 1	Seg. 2	Seg. 3	Seg. 4	Seg. 5	Seg. 6	Seg. 7	Seg. 8	Seg. 9
#1 6:30 - 6:45	B	B	A	B	B	B	A	B	B
#2 6:45 - 7:00	B	C	B	B	B	B	B	B	B
#3 7:00 - 7:15	B	C	B	B	B	B	B	B	B
#4 7:15 - 7:30	C	D	B	C	C	C	C	C	C
#5 7:30 - 7:45	C	D	C	C	C	C	C	C	C
#6 7:45 - 8:00	D	D	C	C	C	C	C	C	C
#7 8:00 - 8:15	C	D	B	C	C	C	C	C	C
#8 8:15 - 8:30	C	C	B	C	C	C	B	C	C
#9 8:30 - 8:45	C	C	B	C	C	C	B	C	C
#10 8:45 - 9:00	C	C	B	B	B	B	B	B	C
#11 9:00 - 9:15	B	C	B	B	B	B	B	B	B
#12 9:15 - 9:30	B	C	B	B	B	B	B	B	B

DocuSign Envelope ID: 5C03745C-4B01-4834-A65D-B77F558A4F46

Table 13: 2045 No-Build PM Peak Density and Level of Service - Eastbound

Density (pc/mi/ln)

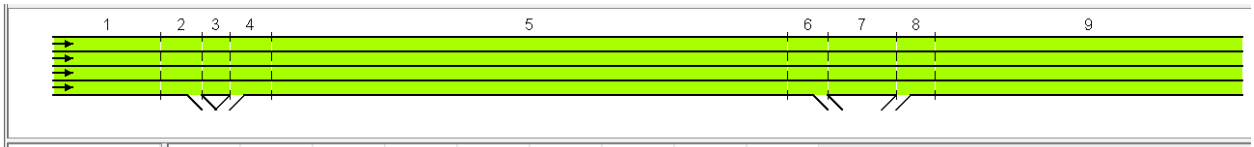

Analysis Period	Seg. 1	Seg. 2	Seg. 3	Seg. 4	Seg. 5	Seg. 6	Seg. 7	Seg. 8	Seg. 9
#1 15:30 - 15:45	23.0	23.6	20.2	25.4	23.5	24.0	19.2	25.5	23.5
#2 15:45 - 16:00	29.5	29.5	24.9	29.7	28.3	28.3	21.5	28.8	27.0
#3 16:00 - 16:15	27.6	27.6	23.2	28.3	26.6	26.7	21.2	27.8	26.0
#4 16:15 - 16:30	29.1	29.1	24.4	28.6	26.9	27.1	20.3	27.0	25.1
#5 16:30 - 16:45	26.2	26.5	22.5	27.3	25.4	25.9	19.3	25.0	23.0
#6 16:45 - 17:00	26.2	26.4	22.6	27.5	25.7	25.9	20.5	28.1	26.2
#7 17:00 - 17:15	28.4	28.4	23.8	29.4	27.9	27.9	22.6	30.1	28.5
#8 17:15 - 17:30	33.1	33.1	28.4	33.4	33.2	33.2	25.1	33.3	32.7
#9 17:30 - 17:45	26.9	27.0	23.5	28.3	26.6	26.7	21.1	28.0	26.1
#10 17:45 - 18:00	25.4	25.9	21.5	25.4	23.4	24.1	18.3	24.3	22.3
#11 18:00 - 18:15	20.4	21.1	18.1	21.5	19.8	20.3	16.7	21.9	20.1
#12 18:15 - 18:30	20.9	21.6	18.4	21.5	19.8	20.3	16.2	21.0	19.3

LOS

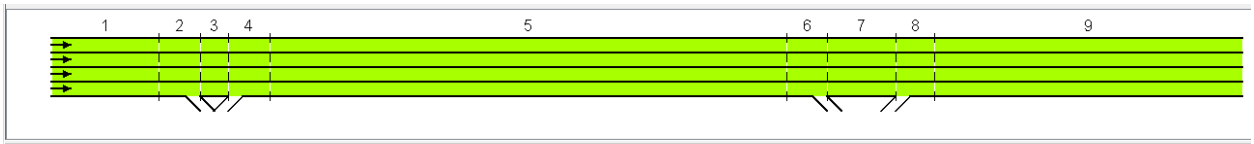

Analysis Period	Seg. 1	Seg. 2	Seg. 3	Seg. 4	Seg. 5	Seg. 6	Seg. 7	Seg. 8	Seg. 9
#1 15:30 - 15:45	C	C	C	C	C	C	C	C	C
#2 15:45 - 16:00	D	D	C	C	D	C	C	C	D
#3 16:00 - 16:15	D	D	C	C	D	C	C	C	C
#4 16:15 - 16:30	D	D	C	C	D	C	C	C	C
#5 16:30 - 16:45	D	C	C	C	C	C	C	C	C
#6 16:45 - 17:00	D	C	C	C	C	C	C	C	D
#7 17:00 - 17:15	D	D	C	C	D	C	C	D	D
#8 17:15 - 17:30	D	D	D	D	D	C	C	D	D
#9 17:30 - 17:45	D	D	C	C	D	C	C	C	D
#10 17:45 - 18:00	C	C	C	C	C	C	C	C	C
#11 18:00 - 18:15	C	C	C	C	C	B	B	C	C
#12 18:15 - 18:30	C	C	C	B	C	B	B	C	C

DocuSign Envelope ID: 5C03745C-4B01-4834-A65D-B77F558A4F46

Table 14: 2045 No-Build PM Peak Density and Level of Service - Westbound

Density (pc/mi/ln)

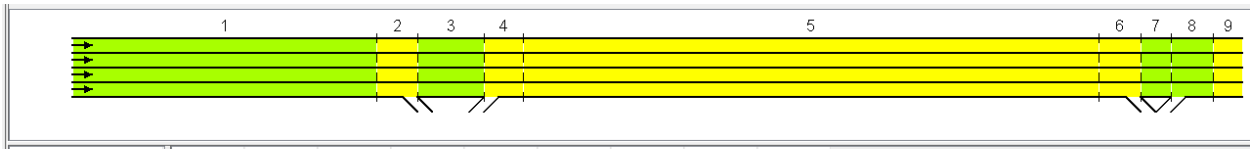

Analysis Period	Seg. 1	Seg. 2	Seg. 3	Seg. 4	Seg. 5	Seg. 6	Seg. 7	Seg. 8	Seg. 9
#1 15:30 - 15:45	25.6	26.1	21.3	29.5	27.8	27.8	24.8	30.7	29.4
#2 15:45 - 16:00	26.4	26.8	21.8	29.1	27.4	27.4	24.3	29.7	28.2
#3 16:00 - 16:15	24.1	24.8	20.1	27.6	25.7	25.8	23.4	29.4	27.8
#4 16:15 - 16:30	26.1	26.7	20.8	26.9	25.0	25.3	22.6	29.0	27.3
#5 16:30 - 16:45	22.2	23.1	18.5	25.8	23.7	24.2	21.7	26.3	24.4
#6 16:45 - 17:00	23.5	24.2	19.8	25.4	23.5	24.0	20.9	26.1	24.2
#7 17:00 - 17:15	24.0	24.8	19.7	28.0	26.0	26.3	22.6	28.6	26.9
#8 17:15 - 17:30	23.8	24.7	19.4	27.3	25.3	25.7	22.1	28.2	26.5
#9 17:30 - 17:45	22.2	23.1	18.5	24.9	23.0	23.5	20.7	26.5	24.6
#10 17:45 - 18:00	21.4	22.3	18.0	25.2	23.2	23.6	21.5	26.5	24.7
#11 18:00 - 18:15	19.9	20.9	16.2	22.6	20.7	21.3	19.1	23.8	21.9
#12 18:15 - 18:30	19.7	20.5	17.0	21.3	19.6	20.1	18.2	22.1	20.4

LOS

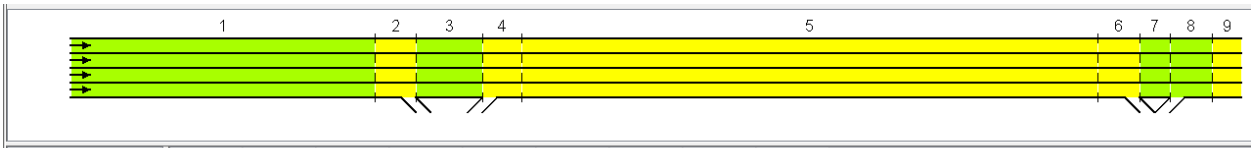

Analysis Period	Seg. 1	Seg. 2	Seg. 3	Seg. 4	Seg. 5	Seg. 6	Seg. 7	Seg. 8	Seg. 9
#1 15:30 - 15:45	C	D	C	D	D	D	C	C	D
#2 15:45 - 16:00	D	D	C	C	D	D	C	C	D
#3 16:00 - 16:15	C	D	C	C	C	C	C	C	D
#4 16:15 - 16:30	D	D	C	C	C	C	C	C	D
#5 16:30 - 16:45	C	D	C	C	C	C	C	C	C
#6 16:45 - 17:00	C	D	C	C	C	C	C	C	C
#7 17:00 - 17:15	C	D	C	D	D	C	C	C	D
#8 17:15 - 17:30	C	D	C	C	C	C	C	C	D
#9 17:30 - 17:45	C	D	C	C	C	C	C	C	C
#10 17:45 - 18:00	C	C	C	C	C	C	C	C	C
#11 18:00 - 18:15	C	C	B	C	C	C	C	C	C
#12 18:15 - 18:30	C	C	B	C	C	C	C	C	C

DocuSign Envelope ID: 5C03745C-4B01-4834-A65D-B77F558A4F46

2045 Build

Table 15: 2045 Build AM Peak Density and Level of Service - Eastbound

Density (pc/mi/ln)

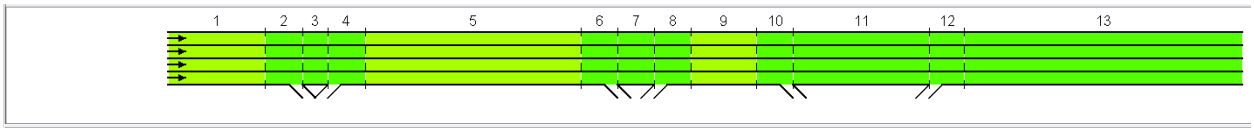

Analysis Period	Seg. 1	Seg. 2	Seg. 3	Seg. 4	Seg. 5	Seg. 6	Seg. 7	Seg. 8	Seg. 9	Seg. 10	Seg. 11	Seg. 12	Seg. 13
#1 6:30 - 6:45	19.2	19.7	18.0	20.5	18.9	19.4	17.6	19.7	18.2	18.6	15.2	17.7	16.4
#2 6:45 - 7:00	17.7	18.1	16.4	19.0	17.7	18.1	15.9	18.0	16.7	17.4	11.5	13.6	12.8
#3 7:00 - 7:15	17.2	17.6	16.1	19.3	17.9	18.3	16.6	18.9	17.6	17.9	14.0	16.4	15.3
#4 7:15 - 7:30	23.3	23.6	22.1	26.0	24.1	24.4	22.1	25.2	23.3	24.2	16.9	20.3	18.8
#5 7:30 - 7:45	28.3	28.3	26.2	30.3	29.0	29.0	26.0	29.6	28.1	28.2	20.3	25.5	23.6
#6 7:45 - 8:00	27.6	27.6	25.1	29.4	27.9	27.9	24.6	28.2	26.4	27.2	18.0	22.4	20.6
#7 8:00 - 8:15	22.0	22.6	20.3	24.5	22.6	23.2	20.4	23.8	21.9	22.7	16.4	20.1	18.6
#8 8:15 - 8:30	22.6	23.1	20.4	24.0	22.1	22.7	19.9	23.0	21.1	21.8	16.7	20.6	19.0
#9 8:30 - 8:45	21.8	22.3	20.2	23.6	21.7	22.3	19.9	22.9	21.1	21.8	16.7	20.7	19.1
#10 8:45 - 9:00	22.3	22.8	20.7	24.6	22.7	23.2	20.7	24.0	22.1	22.8	17.1	21.2	19.5
#11 9:00 - 9:15	18.7	19.1	17.5	20.1	18.6	19.0	17.3	19.8	18.3	18.7	15.3	19.0	17.6
#12 9:15 - 9:30	18.9	19.3	17.3	20.3	18.8	19.3	17.2	19.8	18.3	18.7	15.0	18.6	17.3

LOS

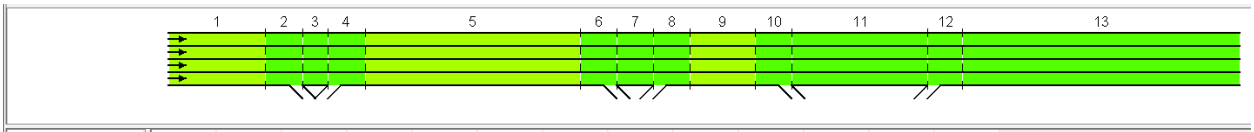

Analysis Period	Seg. 1	Seg. 2	Seg. 3	Seg. 4	Seg. 5	Seg. 6	Seg. 7	Seg. 8	Seg. 9	Seg. 10	Seg. 11	Seg. 12	Seg. 13
#1 6:30 - 6:45	C	B	B	B	C	B	B	B	C	B	B	B	B
#2 6:45 - 7:00	B	B	B	B	B	B	B	B	B	B	B	B	B
#3 7:00 - 7:15	B	B	B	B	B	B	B	B	B	B	B	B	B
#4 7:15 - 7:30	C	C	C	C	C	C	C	C	C	C	B	B	C
#5 7:30 - 7:45	D	C	D	C	D	D	D	C	D	C	C	C	C
#6 7:45 - 8:00	D	C	C	C	D	D	C	C	D	D	B	C	C
#7 8:00 - 8:15	C	C	C	C	C	C	C	C	C	C	B	B	C
#8 8:15 - 8:30	C	C	C	C	C	C	C	C	C	C	B	C	C
#9 8:30 - 8:45	C	C	C	C	C	C	C	C	C	C	B	C	C
#10 8:45 - 9:00	C	C	C	C	C	C	C	C	C	C	B	C	C
#11 9:00 - 9:15	C	B	B	B	C	B	B	B	C	B	B	B	B
#12 9:15 - 9:30	C	B	B	B	C	C	B	B	C	B	B	B	B

DocuSign Envelope ID: 5C03745C-4B01-4834-A65D-B77F558A4F46

Table 16: 2045 Build AM Peak Density and Level of Service - Westbound

Density (pc/mi/ln)

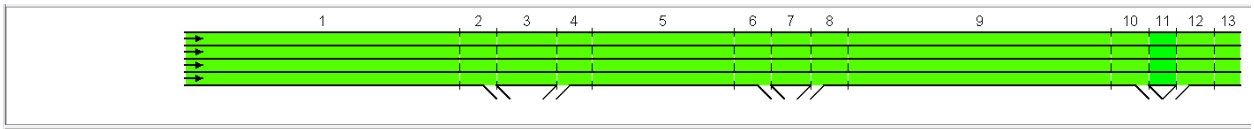

Analysis Period	Seg. 1	Seg. 2	Seg. 3	Seg. 4	Seg. 5	Seg. 6	Seg. 7	Seg. 8	Seg. 9	Seg. 10	Seg. 11	Seg. 12	Seg. 13
#1 6:30 - 6:45	13.7	14.2	11.2	13.8	12.9	13.1	11.9	13.2	12.5	12.7	10.9	12.0	11.4
#2 6:45 - 7:00	16.2	16.9	13.2	16.3	15.2	15.5	13.9	15.7	14.7	15.1	12.8	14.3	13.4
#3 7:00 - 7:15	16.5	17.3	12.9	17.9	16.6	17.0	15.2	17.7	16.4	16.9	14.7	16.6	15.5
#4 7:15 - 7:30	21.5	22.5	17.5	24.0	22.0	22.6	20.3	23.8	21.9	22.6	19.5	22.3	20.6
#5 7:30 - 7:45	24.2	25.1	19.1	25.8	23.8	24.3	21.7	25.5	23.6	24.2	20.7	24.0	22.1
#6 7:45 - 8:00	26.9	27.5	20.5	27.1	25.2	25.5	22.6	26.5	24.6	25.1	21.2	24.6	22.7
#7 8:00 - 8:15	22.5	23.7	17.5	23.2	21.3	21.9	19.5	22.8	21.0	21.6	18.8	21.6	19.9
#8 8:15 - 8:30	20.5	21.5	16.9	22.4	20.6	21.1	19.2	22.4	20.6	21.2	18.8	21.6	19.9
#9 8:30 - 8:45	20.2	21.2	16.5	21.4	19.7	20.2	18.4	21.4	19.7	20.3	18.1	20.8	19.2
#10 8:45 - 9:00	18.4	19.2	14.9	19.3	17.8	18.2	16.6	19.4	18.0	18.4	16.6	19.3	17.9
#11 9:00 - 9:15	17.6	18.3	14.6	18.5	17.2	17.5	16.1	18.5	17.2	17.5	15.8	18.0	16.7
#12 9:15 - 9:30	17.1	17.7	14.5	18.3	17.0	17.3	16.0	18.5	17.1	17.5	15.8	18.2	16.9

LOS

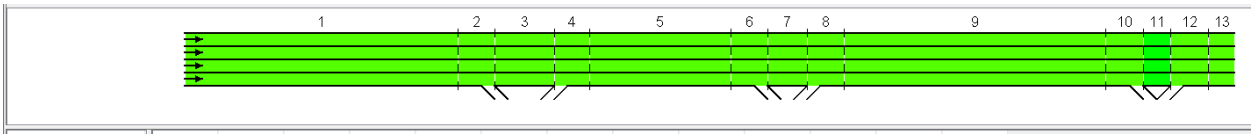

Analysis Period	Seg. 1	Seg. 2	Seg. 3	Seg. 4	Seg. 5	Seg. 6	Seg. 7	Seg. 8	Seg. 9	Seg. 10	Seg. 11	Seg. 12	Seg. 13
#1 6:30 - 6:45	B	B	B	B	B	B	B	B	B	B	A	B	B
#2 6:45 - 7:00	B	C	B	B	B	B	B	B	B	B	B	B	B
#3 7:00 - 7:15	B	C	B	B	B	B	B	B	B	B	B	B	B
#4 7:15 - 7:30	C	C	B	C	C	C	C	C	C	C	C	C	C
#5 7:30 - 7:45	C	D	C	C	C	C	C	C	C	C	C	C	C
#6 7:45 - 8:00	D	D	C	C	C	C	C	C	C	C	C	C	C
#7 8:00 - 8:15	C	D	B	C	C	C	C	C	C	C	C	B	C
#8 8:15 - 8:30	C	C	B	C	C	C	C	C	C	C	C	B	C
#9 8:30 - 8:45	C	C	B	C	C	C	C	B	C	C	C	B	C
#10 8:45 - 9:00	C	C	B	B	B	B	B	B	B	B	B	B	B
#11 9:00 - 9:15	B	C	B	B	B	B	B	B	B	B	B	B	B
#12 9:15 - 9:30	B	C	B	B	B	B	B	B	B	B	B	B	B

DocuSign Envelope ID: 5C03745C-4B01-4834-A65D-B77F558A4F46

Table 17: 2045 Build PM Peak Density and Level of Service - Eastbound

Density (pc/mi/ln)

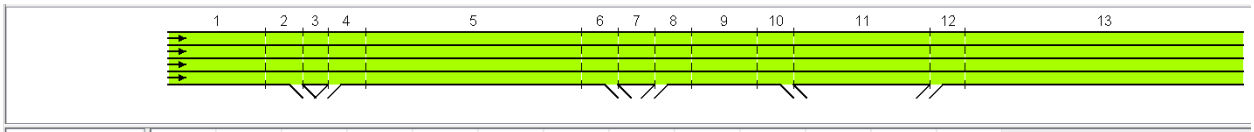

Analysis Period	Seg. 1	Seg. 2	Seg. 3	Seg. 4	Seg. 5	Seg. 6	Seg. 7	Seg. 8	Seg. 9	Seg. 10	Seg. 11	Seg. 12	Seg. 13
#1 15:30 - 15:45	21.6	22.1	20.3	23.6	21.7	22.2	20.4	23.4	21.6	22.0	18.9	22.6	20.8
#2 15:45 - 16:00	19.8	20.3	18.5	22.0	20.3	20.8	18.8	21.7	20.0	20.6	15.7	18.9	17.5
#3 16:00 - 16:15	19.3	19.7	18.2	22.5	20.6	21.1	19.5	22.9	21.0	21.5	18.0	21.7	20.0
#4 16:15 - 16:30	26.9	26.9	25.5	30.1	28.7	28.7	26.6	30.3	29.0	29.0	22.3	27.5	25.7
#5 16:30 - 16:45	33.9	33.9	31.2	36.3	36.3	36.3	32.7	37.4	37.4	37.4	27.7	35.3	35.3
#6 16:45 - 17:00	32.9	32.9	29.7	34.8	34.8	34.8	30.8	34.9	34.9	34.9	24.8	31.5	30.5
#7 17:00 - 17:15	25.2	25.4	23.3	28.6	26.9	26.9	24.7	29.0	27.4	27.4	21.8	27.6	25.7
#8 17:15 - 17:30	25.9	26.0	23.5	27.9	26.1	26.1	23.9	27.9	26.1	26.2	21.7	27.7	25.8
#9 17:30 - 17:45	24.9	25.1	23.1	27.3	25.5	25.6	23.6	27.6	25.8	26.0	21.4	27.7	25.8
#10 17:45 - 18:00	25.6	25.7	23.7	28.6	26.9	26.9	24.8	29.1	27.5	27.5	22.4	28.5	26.8
#11 18:00 - 18:15	21.4	21.9	20.2	23.7	21.8	22.3	20.6	24.2	22.3	22.7	19.6	25.3	23.3
#12 18:15 - 18:30	21.2	21.7	19.6	23.6	21.7	22.2	20.2	23.9	22.0	22.5	19.2	24.6	22.7

LOS

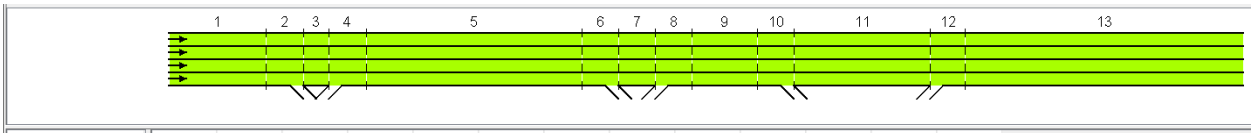

Analysis Period	Seg. 1	Seg. 2	Seg. 3	Seg. 4	Seg. 5	Seg. 6	Seg. 7	Seg. 8	Seg. 9	Seg. 10	Seg. 11	Seg. 12	Seg. 13
#1 15:30 - 15:45	C	C	C	C	C	C	C	C	C	C	C	C	C
#2 15:45 - 16:00	C	C	C	C	C	C	C	B	C	C	B	B	B
#3 16:00 - 16:15	C	B	C	C	C	C	C	C	C	C	C	C	C
#4 16:15 - 16:30	D	C	C	C	D	C	D	C	D	C	C	C	C
#5 16:30 - 16:45	D	D	D	D	E	D	D	D	E	D	D	D	E
#6 16:45 - 17:00	D	D	D	D	D	D	D	D	D	D	C	D	D
#7 17:00 - 17:15	C	C	C	C	D	C	C	C	D	C	C	C	C
#8 17:15 - 17:30	C	C	C	C	D	C	C	C	D	C	C	C	C
#9 17:30 - 17:45	C	C	C	C	C	C	C	C	C	C	C	C	C
#10 17:45 - 18:00	C	C	C	C	D	C	C	C	D	C	C	C	D
#11 18:00 - 18:15	C	C	C	C	C	C	C	C	C	C	C	C	C
#12 18:15 - 18:30	C	C	C	C	C	C	C	C	C	C	C	C	C

DocuSign Envelope ID: 5C03745C-4B01-4834-A65D-B77F558A4F46

Table 18: 2045 Build PM Peak Density and Level of Service - Westbound

Density (pc/mi/ln)

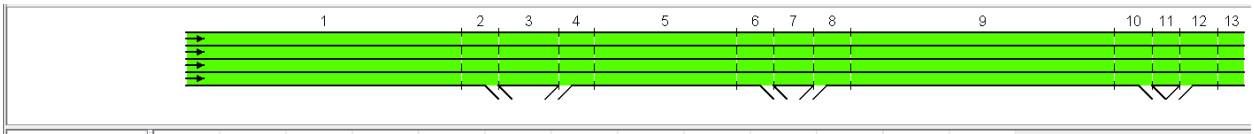

Analysis Period	Seg. 1	Seg. 2	Seg. 3	Seg. 4	Seg. 5	Seg. 6	Seg. 7	Seg. 8	Seg. 9	Seg. 10	Seg. 11	Seg. 12	Seg. 13
#1 15:30 - 15:45	13.6	14.0	11.8	15.1	14.1	14.3	13.2	15.1	14.1	14.4	12.6	14.1	13.3
#2 15:45 - 16:00	16.1	16.6	13.9	17.9	16.6	16.9	15.5	17.9	16.7	17.1	14.8	17.0	15.8
#3 16:00 - 16:15	16.4	17.0	13.7	20.5	18.8	19.3	17.7	21.1	19.5	20.0	17.8	20.5	18.9
#4 16:15 - 16:30	21.3	22.1	18.3	27.3	25.1	25.3	23.4	28.0	26.3	26.4	23.5	27.2	25.4
#5 16:30 - 16:45	24.0	24.7	20.1	29.3	27.4	27.4	25.2	30.1	28.7	28.7	25.3	29.4	27.9
#6 16:45 - 17:00	26.7	27.0	21.8	30.7	29.2	29.2	26.5	31.2	30.1	30.1	26.0	30.2	28.9
#7 17:00 - 17:15	22.3	23.2	18.6	26.3	24.3	24.6	22.5	26.9	25.1	25.3	22.6	26.5	24.6
#8 17:15 - 17:30	20.4	21.2	17.7	25.1	23.0	23.4	21.7	26.0	24.1	24.4	22.1	25.9	24.0
#9 17:30 - 17:45	20.0	20.8	17.3	24.0	22.0	22.4	20.7	24.9	23.0	23.5	21.2	25.1	23.1
#10 17:45 - 18:00	18.3	18.9	15.7	21.5	19.7	20.2	18.7	22.6	20.8	21.3	19.4	23.3	21.4
#11 18:00 - 18:15	17.4	18.0	15.2	20.4	18.8	19.2	17.9	21.2	19.5	20.0	18.2	21.3	19.6
#12 18:15 - 18:30	17.0	17.5	15.0	20.1	18.5	18.9	17.7	21.1	19.4	19.9	18.1	21.4	19.7

LOS

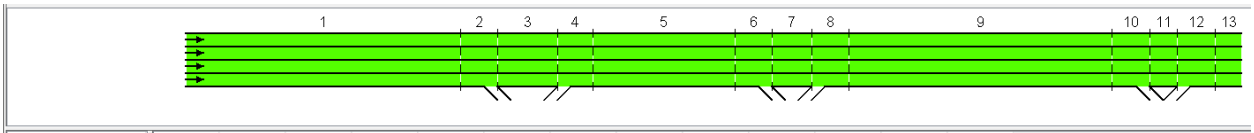

Analysis Period	Seg. 1	Seg. 2	Seg. 3	Seg. 4	Seg. 5	Seg. 6	Seg. 7	Seg. 8	Seg. 9	Seg. 10	Seg. 11	Seg. 12	Seg. 13
#1 15:30 - 15:45	B	B	B	B	B	B	B	B	B	B	B	B	B
#2 15:45 - 16:00	B	C	B	B	B	B	B	B	B	B	B	B	B
#3 16:00 - 16:15	B	C	B	C	C	B	B	C	C	C	B	B	C
#4 16:15 - 16:30	C	C	C	D	C	C	C	C	D	C	C	C	C
#5 16:30 - 16:45	C	D	C	D	D	C	C	C	D	D	C	C	D
#6 16:45 - 17:00	D	D	C	D	D	D	D	C	D	D	C	C	D
#7 17:00 - 17:15	C	D	C	C	C	C	C	C	C	C	C	C	C
#8 17:15 - 17:30	C	C	B	C	C	C	C	C	C	C	C	C	C
#9 17:30 - 17:45	C	C	B	C	C	C	C	C	C	C	C	C	C
#10 17:45 - 18:00	C	C	B	C	C	C	C	C	C	C	C	C	C
#11 18:00 - 18:15	B	C	B	C	C	B	B	B	C	C	C	B	C
#12 18:15 - 18:30	B	C	B	C	C	B	B	C	C	C	C	B	C

DocuSign Envelope ID: 5C03745C-4B01-4834-A65D-B77F558A4F46

2045 Build (Left Entrance/Exit for HE-0001 Westbound Ramps)

2045 Build (Left Entrance/Exit) AM Peak Density and Level of Service - Eastbound

This scenario has the same results as 2045 Build as there is no change in the eastbound direction.

Table 19: 2045 Build (Left Entrance/Exit) AM Peak Density and Level of Service - Westbound

Density (pc/mi/ln)

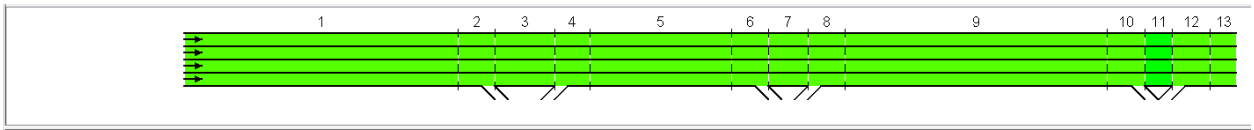

Analysis Period	Seg. 1	Seg. 2	Seg. 3	Seg. 4	Seg. 5	Seg. 6	Seg. 7	Seg. 8	Seg. 9	Seg. 10	Seg. 11	Seg. 12	Seg. 13
#1 6:30 - 6:45	13.7	14.2	11.2	13.8	12.9	13.2	11.9	13.2	12.5	12.7	10.9	12.0	11.4
#2 6:45 - 7:00	16.2	16.9	13.2	16.3	15.2	15.6	13.9	15.7	14.7	15.1	12.8	14.3	13.4
#3 7:00 - 7:15	16.5	17.3	12.9	17.9	16.6	17.1	15.2	17.7	16.4	16.9	14.7	16.6	15.5
#4 7:15 - 7:30	21.5	22.5	17.5	24.0	22.0	22.7	20.3	23.8	21.9	22.6	19.5	22.3	20.6
#5 7:30 - 7:45	24.2	25.1	19.1	25.8	23.8	24.4	21.7	25.5	23.6	24.2	20.7	24.0	22.1
#6 7:45 - 8:00	26.9	27.5	20.5	27.1	25.2	25.6	22.6	26.5	24.6	25.1	21.2	24.6	22.7
#7 8:00 - 8:15	22.5	23.7	17.5	23.2	21.3	22.0	19.5	22.8	21.0	21.6	18.8	21.6	19.9
#8 8:15 - 8:30	20.5	21.5	16.9	22.4	20.6	21.2	19.2	22.4	20.6	21.2	18.8	21.6	19.9
#9 8:30 - 8:45	20.2	21.2	16.5	21.4	19.7	20.4	18.4	21.4	19.7	20.3	18.1	20.8	19.2
#10 8:45 - 9:00	18.4	19.2	14.9	19.3	17.8	18.3	16.6	19.4	18.0	18.4	16.6	19.3	17.9
#11 9:00 - 9:15	17.6	18.3	14.6	18.5	17.2	17.6	16.1	18.5	17.2	17.5	15.8	18.0	16.7
#12 9:15 - 9:30	17.1	17.7	14.5	18.3	17.0	17.4	16.0	18.3	17.0	17.4	15.7	18.0	16.7

LOS

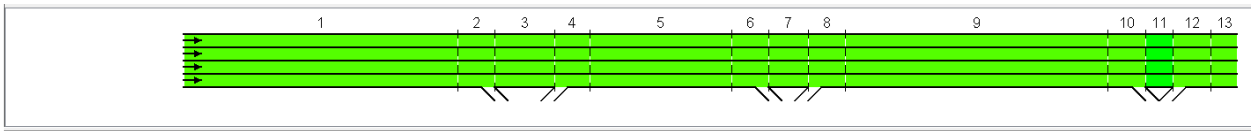

Analysis Period	Seg. 1	Seg. 2	Seg. 3	Seg. 4	Seg. 5	Seg. 6	Seg. 7	Seg. 8	Seg. 9	Seg. 10	Seg. 11	Seg. 12	Seg. 13
#1 6:30 - 6:45	B	B	B	B	B	B	B	B	B	B	A	B	B
#2 6:45 - 7:00	B	C	B	B	B	B	B	B	B	B	B	B	B
#3 7:00 - 7:15	B	C	B	B	B	B	B	B	B	B	B	B	B
#4 7:15 - 7:30	C	C	B	C	C	C	C	C	C	C	C	C	C
#5 7:30 - 7:45	C	D	C	C	C	C	C	C	C	C	C	C	C
#6 7:45 - 8:00	D	D	C	C	C	D	C	C	C	C	C	C	C
#7 8:00 - 8:15	C	D	B	C	C	C	C	C	C	C	C	B	C
#8 8:15 - 8:30	C	C	B	C	C	C	C	C	C	C	C	B	C
#9 8:30 - 8:45	C	C	B	C	C	C	C	B	C	C	C	B	C
#10 8:45 - 9:00	C	C	B	B	B	C	B	B	B	B	B	B	B
#11 9:00 - 9:15	B	C	B	B	B	B	B	B	B	B	B	B	B
#12 9:15 - 9:30	B	C	B	B	B	B	B	B	B	B	B	B	B

2045 Build (Left Entrance/Exit) PM Peak Density and Level of Service - Eastbound

This scenario has the same results as 2045 Build as there is no change in the eastbound direction.

DocuSign Envelope ID: 5C03745C-4B01-4834-A65D-B77F558A4F46

Table 20: 2045 Build (Left Entrance/Exit) PM Peak Density and Level of Service - Westbound

Density (pc/mi/ln)

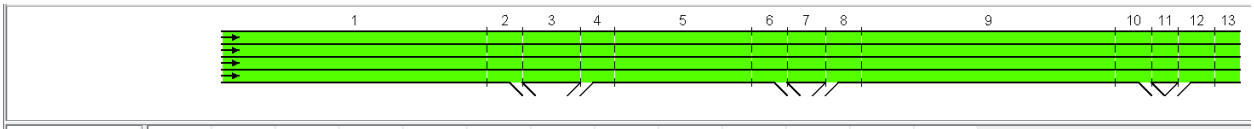

Analysis Period	Seg. 1	Seg. 2	Seg. 3	Seg. 4	Seg. 5	Seg. 6	Seg. 7	Seg. 8	Seg. 9	Seg. 10	Seg. 11	Seg. 12	Seg. 13
#1 15:30 - 15:45	13.6	14.0	11.8	15.1	14.1	14.4	13.2	15.1	14.1	14.4	12.6	14.1	13.3
#2 15:45 - 16:00	16.1	16.6	13.9	17.9	16.6	17.0	15.5	17.9	16.7	17.1	14.8	17.0	15.8
#3 16:00 - 16:15	16.4	17.0	13.7	20.5	18.8	19.4	17.7	21.1	19.5	20.0	17.8	20.5	18.9
#4 16:15 - 16:30	21.3	22.1	18.3	27.3	25.1	25.4	23.4	28.0	26.3	26.4	23.5	27.2	25.4
#5 16:30 - 16:45	24.0	24.7	20.1	29.3	27.4	27.4	25.2	30.1	28.7	28.7	25.3	29.4	27.9
#6 16:45 - 17:00	26.7	27.0	21.8	30.7	29.2	29.2	26.5	31.2	30.1	30.1	26.0	30.2	28.9
#7 17:00 - 17:15	22.3	23.2	18.6	26.3	24.3	24.7	22.5	26.9	25.1	25.3	22.6	26.5	24.6
#8 17:15 - 17:30	20.4	21.2	17.7	25.1	23.0	23.5	21.7	26.0	24.1	24.4	22.1	25.9	24.0
#9 17:30 - 17:45	20.0	20.8	17.3	24.0	22.0	22.6	20.7	24.9	23.0	23.5	21.2	25.1	23.1
#10 17:45 - 18:00	18.3	18.9	15.7	21.5	19.7	20.3	18.7	22.6	20.8	21.3	19.4	23.3	21.4
#11 18:00 - 18:15	17.4	18.0	15.2	20.4	18.8	19.3	17.9	21.2	19.5	20.0	18.2	21.3	19.6
#12 18:15 - 18:30	17.0	17.5	15.0	20.1	18.5	19.0	17.7	21.1	19.4	19.9	18.1	21.4	19.7

LOS

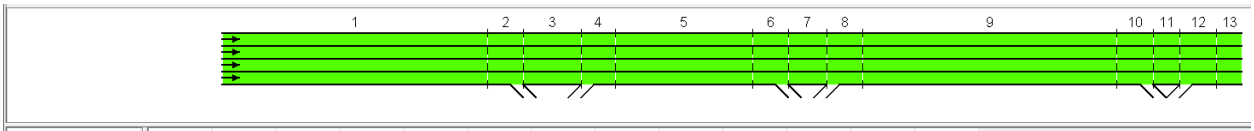

Analysis Period	Seg. 1	Seg. 2	Seg. 3	Seg. 4	Seg. 5	Seg. 6	Seg. 7	Seg. 8	Seg. 9	Seg. 10	Seg. 11	Seg. 12	Seg. 13
#1 15:30 - 15:45	B	B	B	B	B	B	B	B	B	B	B	B	B
#2 15:45 - 16:00	B	C	B	B	B	B	B	B	B	B	B	B	B
#3 16:00 - 16:15	B	C	B	C	C	C	B	C	C	C	B	B	C
#4 16:15 - 16:30	C	C	C	D	C	C	C	C	D	C	C	C	C
#5 16:30 - 16:45	C	D	C	D	D	D	C	C	D	D	C	C	D
#6 16:45 - 17:00	D	D	C	D	D	D	D	C	D	D	C	C	D
#7 17:00 - 17:15	C	D	C	C	C	C	C	C	C	C	C	C	C
#8 17:15 - 17:30	C	C	B	C	C	C	C	C	C	C	C	C	C
#9 17:30 - 17:45	C	C	B	C	C	C	C	C	C	C	C	C	C
#10 17:45 - 18:00	C	C	B	C	C	C	C	C	C	C	C	C	C
#11 18:00 - 18:15	C	C	B	C	C	C	C	C	C	C	C	C	C
#12 18:15 - 18:30	B	C	B	C	C	C	B	B	C	C	C	B	C

DocuSign Envelope ID: 5C03745C-4B01-4834-A65D-B77F558A4F46

2040 Build

To compare operations to the I-4400/I-4700 study, the forecast volumes were interpolated to 2040 (to match the analysis year of I-4400/I-4700). FREEVAL shows that all segments operate at LOS D or better in 2040, including Segment 5, Segment 9, and Segment 13. Only the output for the 2040 Build PM scenario in the eastbound direction is provided in tabular form as all other scenarios provided LOS D or better operations in the 2045 Build scenarios.

Table 21: 2040 Build PM Peak Density and Level of Service - Eastbound

Density (pc/mi/ln)

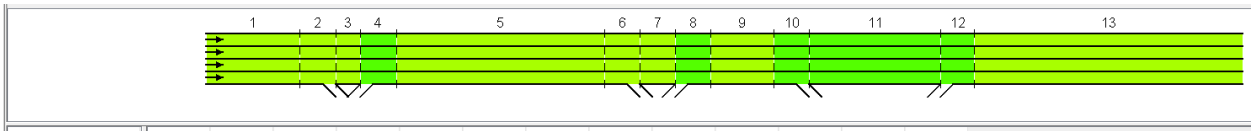

Analysis Period	Seg. 1	Seg. 2	Seg. 3	Seg. 4	Seg. 5	Seg. 6	Seg. 7	Seg. 8	Seg. 9	Seg. 10	Seg. 11	Seg. 12	Seg. 13
#1 15:30 - 15:45	20.1	20.6	18.9	21.8	20.1	20.5	19.1	21.7	20.0	20.4	17.6	21.0	19.4
#2 15:45 - 16:00	18.5	18.9	17.2	20.4	18.8	19.2	17.6	20.1	18.6	19.1	14.6	17.6	16.4
#3 16:00 - 16:15	18.0	18.4	16.9	20.8	19.1	19.6	18.2	21.1	19.4	19.9	16.7	20.1	18.6
#4 16:15 - 16:30	24.6	24.7	23.4	27.7	26.0	26.0	24.4	28.0	26.2	26.4	20.6	25.5	23.6
#5 16:30 - 16:45	30.2	30.2	28.0	32.5	31.9	31.9	29.5	33.0	32.7	32.7	25.1	32.2	31.3
#6 16:45 - 17:00	29.4	29.4	26.8	31.6	30.8	30.8	28.0	31.7	30.8	30.8	22.8	29.2	27.5
#7 17:00 - 17:15	23.2	23.6	21.4	26.4	24.5	24.7	22.8	26.7	24.8	25.2	20.1	25.5	23.5
#8 17:15 - 17:30	23.8	24.2	21.6	25.7	23.8	24.2	22.1	25.7	23.8	24.2	20.1	25.6	23.7
#9 17:30 - 17:45	22.9	23.3	21.3	25.2	23.3	23.7	21.9	25.5	23.6	24.0	19.8	25.6	23.6
#10 17:45 - 18:00	23.5	23.9	21.8	26.4	24.5	24.7	22.9	26.8	24.9	25.2	20.6	26.4	24.4
#11 18:00 - 18:15	19.9	20.4	18.8	21.9	20.2	20.6	19.3	22.3	20.5	20.9	18.2	23.4	21.5
#12 18:15 - 18:30	19.7	20.2	18.2	21.8	20.0	20.5	18.9	22.1	20.3	20.8	17.8	22.8	20.9

LOS

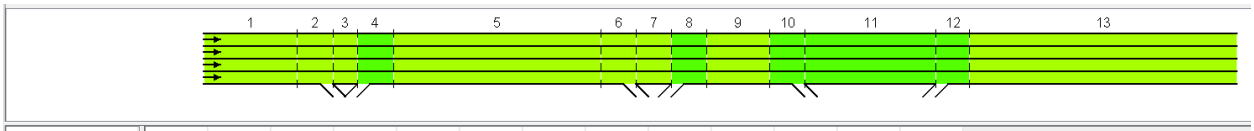

Analysis Period	Seg. 1	Seg. 2	Seg. 3	Seg. 4	Seg. 5	Seg. 6	Seg. 7	Seg. 8	Seg. 9	Seg. 10	Seg. 11	Seg. 12	Seg. 13
#1 15:30 - 15:45	C	C	C	B	C	C	C	B	C	B	B	B	C
#2 15:45 - 16:00	C	B	B	B	C	B	B	B	C	B	B	B	B
#3 16:00 - 16:15	C	B	B	C	C	B	C	B	C	B	B	B	C
#4 16:15 - 16:30	C	C	C	C	C	C	C	C	D	C	C	C	C
#5 16:30 - 16:45	D	D	D	D	D	D	D	D	D	C	C	D	D
#6 16:45 - 17:00	D	D	D	C	D	D	D	C	D	C	C	C	D
#7 17:00 - 17:15	C	C	C	C	C	C	C	C	C	C	C	C	C
#8 17:15 - 17:30	C	C	C	C	C	C	C	C	C	C	C	C	C
#9 17:30 - 17:45	C	C	C	C	C	C	C	C	C	C	C	C	C
#10 17:45 - 18:00	C	C	C	C	C	C	C	C	C	C	C	C	C
#11 18:00 - 18:15	C	C	C	C	C	C	C	C	C	B	C	C	C
#12 18:15 - 18:30	C	C	C	C	C	C	C	C	C	B	B	C	C

DocuSign Envelope ID: 5C03745C-4B01-4834-A65D-B77F558A4F46

The following table provides a summary of the lowest level of service reported.

Table 22: FREEVAL LOS Summary

	Seg 1	Seg 2	Seg 3	Seg 4	Seg 5	Seg 6	Seg 7	Seg 8	Seg 9	Seg 10	Seg 11	Seg 12	Seg 13
2021 Existing	C	C	C	C	C	B	B	C	C	n/a	n/a	n/a	n/a
2021 Build	C	C	C	C	C	C	C	C	C	C	B	C	C
2021 Build (Left Ent./Exit)	C	C	C	C	C	C	C	C	C	C	B	C	C
2045 No-Build	D	D	D	D	D	C	D	D	D	n/a	n/a	n/a	n/a
2045 Build	D	D	D	D	**E**	D	D	D	**E**	D	D	D	**E**
2045 Build Left Ent./Exit	D	D	D	D	**E**	D	D	D	**E**	D	D	D	**E**
2040 Build	D	D	D	D	D	D	D	D	D	D	C	D	D
2040 Build (Left Ent./Exit)	D	D	D	D	D	D	D	D	D	D	C	D	D

Table 23: Segment Description

Segment	Existing and No-Build Eastbound	Existing and No-Build Westbound	Build Eastbound	Build Westbound
1	I-26 Entering study area	I-26 Entering study area	I-26 Entering study area	I-26 Entering study area
2	NC 191 Diverge	NC 146 Diverge	NC 191 Diverge	NC 146 Diverge
3	Basic Segment between ramps	Basic Segment between ramps	Basic Segment between ramps	Basic Segment between ramps
4	NC 191 Merge	NC 146 Merge	NC 191 Merge	NC 146 Merge
5	Basic Segment between interchanges	Basic Segment between interchanges	Basic Segment between interchanges	Basic Segment between interchanges
6	NC 146 Diverge	NC 191 Diverge	HE-0001 Diverge	HE-0001 Diverge
7	Basic Segment between ramps	Basic Segment between ramps	Basic Segment between ramps	Basic Segment between ramps
8	NC 146 Merge	NC 191 Merge	HE-0001 Merge	HE-0001 Merge
9	Basic Segment exiting study area	Basic Segment exiting study area	Basic Segment between interchanges	Basic Segment between interchanges
10	n/a	n/a	NC 146 Diverge	NC 191 Diverge
11	n/a	n/a	Basic Segment between ramps	Basic Segment between ramps
12	n/a	n/a	NC 146 Merge	NC 191 Merge
13	n/a	n/a	Basic Segment exiting study area	Basic Segment exiting study area

DocuSign Envelope ID: 5C03745C-4B01-4834-A65D-B77F558A4F46

2.2 Synchro Analysis

Synchro Version 10 traffic analysis software was utilized to evaluate operations at the surface street intersections in the project area. As with FREEVAL, the 2021 Existing Synchro network included the improvements made as part of I-4400/I-4700. Specifically, I-4400/I-4700 relocated the NC 191 (Brevard Road) westbound off ramp to provide more storage and additional spacing between the signalized ramp terminal intersections. The project also removed the north leg from the I-26 eastbound ramp terminal intersection with NC 191 (Brevard Road), converting it to a three-leg configuration.

Volumes for the Synchro analyses were derived from the travel demand forecast for the project. The peak hour calculation uses the forecasted AADT, along with the factors to calculate AM and PM volumes and the directional split within each peak hour to calculate turning movement volumes for each intersection in the study area. Volumes are input into Synchro, along with network data such as speed limit, and traffic control data such as signal timings and signal phasing to analyze operations.

A detailed capacity analysis of the full project area was being prepared concurrent to this IAR. That report will discuss capacity analysis details such as necessary storage and detailed delay and level of service data for each intersection. The intent of this section of the IAR is to provide an analysis that focuses on the effects of constructing the interchange associated with HE-0001.

Note that this section provides the results of the standard diamond configuration at the proposed interchange. Results from the DDI interchange option are provided in **Appendix T.**

2021 Existing Scenario

Since the I-4400/I-4700 was nearing completion at the time of this analysis, the improvements from the I-4400/I-4700 project were included in the 2021 Existing network (as determined during the March 29, 2021 Scoping Coordination meeting, meeting summary provided in **Appendix B**). Specifically, I-4400/I-4700 relocated the eastern ramp terminal intersection approximately 1,200 feet to the northeast and the western ramp terminal intersection was converted to a three-leg intersection, as the local road connection was relocated 500 feet to the southwest. **Figure 2** provides the laneage used in this scenario.

The following intersections were analyzed in Synchro for the IAR:

1. NC 191 (Brevard Road) and access road between Hampton Inn and Petco
2. NC 191 (Brevard Road) and I-26 eastbound ramps
3. NC 191 (Brevard Road) and I-26 westbound Ramps (note that the eastern ramp terminal intersection has been relocated as part of I-4700 and the western ramp terminal intersection is now a three-leg intersection)
4. NC 146 (Long Shoals Road) and Clayton Road
5. NC 146 (Long Shoals Road) and Ledbetter Road (unsignalized)
6. NC 146 (Long Shoals Road) and I-26 Single Point intersection (includes 2 unsignalized intersections and 1 signalized single point intersection) (note that the eastern ramp

DocuSign Envelope ID: 5C03745C-4B01-4834-A65D-B77F558A4F46

access will be signalized and pulled in as part of I-4700 and analyzed as such in all scenarios)

7. NC 146 (Long Shoals Road) and Schenck Parkway/Skyland Inn Drive (note this intersection is being modified as part of I-4700 and that configuration will be analyzed for all scenarios)
8. NC 191 (Brevard Road) and Blue Ridge Parkway Access
9. Blue Ridge Parkway Access and Fredrick Law Olmstead Way (Unsignalized)

Existing signal plans and signal timing plans were used so that Synchro operations matched actual conditions as closely as possible. Note that, as discussed previously, these plans represented the completion of the I-440/I-4700 project where applicable. Also, note that the timing plan for the signal at NC 191 (Brevard Road) and the Blue Ridge Parkway access (signal 13-0837) did not mention which coordination plans refer to the AM and PM peak, so the analysis assumes “coordination plans 1 and 4” refer to the AM and PM peak respectively (based on the signal timing plans for other intersections).

The following table provides the results of the 2021 Existing Synchro analysis.

DocuSign Envelope ID: 5C03745C-4B01-4834-A65D-B77F558A4F46

Table 24: 2021 Existing AM Level of Service and Delay (in seconds)

Intersection (Synchro Node Number)	2021 Existing AM	
	Overall Intersection Delay (LOS)	Approach Delay (LOS) of LOS E/F Movements
NC 191 (Brevard Road) and Commercial Access (1) - Signalized	11.9 (B)	**SBL - 79.0 (E)**
NC 191 (Brevard Road) and I-26 eastbound ramps (2) - Signalized	17.9 (B)	**NBL - 60.0 (E)**
NC 191 (Brevard Road) and I-26 westbound ramps (3) - Signalized	22.0 (C)	**SBL - 69.1 (E)**
Blue Ridge Parkway Access and Fredrick Olmstead Way (4) - Unsignalized*	10.3 (B)	n/a
NC 191 (Brevard Road) and Blue Ridge Parkway Access (5) - Signalized	10.8 (B)	**EBL - 79.6 (E)**
HE-0001 eastbound ramps (6)	n/a	n/a
HE-0001 westbound ramps (7)	n/a	n/a
NC 146 (Long Shoals Road) and Clayton Road (8) - Signalized	19.4 (B)	n/a
NC 146 (Long Shoals Road) and Ledbetter Road (9) - Unsignalized*	26.3 (D)	**NBL - 86.8 (F)**
NC 146 (Long Shoals Road) and I-26 ramps (Single Point) (10) - Signalized	46.7 (D)	**SEL - 129.0 (F)**
NC 146 (Long Shoals Road) and I-26 westbound ramp (11) - Signalized	**65.2 (E)**	**EBT - 93.9 (F)** **NBR - 126.7 (F)**
NC 146 (Long Shoals Road) and Skyland Drive/Schenck Parkway (12) - Signalized	27.7 (C)	**EBL - 61.9 (E)** **NBT - 73.6 (E)** **SBL - 73.8 (E)** **SBT - 72.9 (E)**

* ICU Level of Service reported for unsignalized intersections

DocuSign Envelope ID: 5C03745C-4B01-4834-A65D-B77F558A4F46

Table 25: 2021 Existing PM Level of Service and Delay

Intersection (Synchro Node Number)	2021 Existing PM	
	Overall Intersection LOS (Delay)	Approach LOS (Delay) of LOS E/F Movements
NC 191 (Brevard Road) and Commercial Access (1) - Signalized	9.2 (A)	**SBL - 79.0 (E)**
NC 191 (Brevard Road) and I-26 eastbound ramps (2) - Signalized	24.1 (C)	**NBL - 58.9 (E)**
NC 191 (Brevard Road) and I-26 westbound ramps (3) - Signalized	20.0 (B)	**SBL - 69.2 (E)**
Blue Ridge Parkway Access and Fredrick Olmstead Way (4) - Unsignalized*	11.4 (B)	n/a
NC 191 (Brevard Road) and Blue Ridge Parkway Access (5) - Signalized	19.0 (B)	**EBL - 84.3 (F)**
HE-0001 eastbound ramps (6)	n/a	n/a
HE-0001 westbound ramps (7)	n/a	n/a
NC 146 (Long Shoals Road) and Clayton Road (8) - Signalized	18.2 (B)	n/a
NC 146 (Long Shoals Road) and Ledbetter Road (9) - Unsignalized*	30.7 (D)	**NBL - 276.4 (F)**
NC 146 (Long Shoals Road) and I-26 ramps (Single Point) (10) - Signalized	27.1 (C)	**SEL - 59.7 (E)**
NC 146 (Long Shoals Road) and I-26 westbound ramp (11) - Signalized	18.4 (B)	**NBR - 62.4 (E)**
NC 146 (Long Shoals Road) and Skyland Drive/Schenck Parkway (12) - Signalized	38.4 (D)	**EBL - 55.5 (E)** **NBT - 95.8 (F)** **SBL - 90.7 (F)** **SBT - 87.4 (F)** **SBR - 63.1 (E)**

* ICU Level of Service reported for unsignalized intersections

DocuSign Envelope ID: 5C03745C-4B01-4834-A65D-B77F558A4F46

No signalized intersections experience a failing overall intersection level of service in the 2021 Existing scenario. There are, however, a number of individual movements that operate near capacity (LOS E) or experience failing conditions (LOS F).

2021 Build Scenario

To create this network, the 2021 Existing network, as described above, was modified by adding the ramp terminal intersections for the new interchange of HE-0001 and I-26, a new connector was added from the new interchange to intersect with the Blue Ridge Parkway access at NC 191 (Brevard Road), and a planned roundabout was added between NC 191 (Brevard Road) and I-26. As scoped, this report only provides the results of the analysis for the HE-0001 interchange ramps, the intersection of the new connector and NC 191 (Brevard Road), and the intersection of the Blue Ridge Parkway access and Fredrick Law Olmstead Way for the 2021 Build scenario. Further, note that both Build options (diamond interchange for HE-0001 and a diamond with left entrance/exit ramps for northeast-bound I-26) have nearly identical operations. As such, only the Build – Left Entrance/Exit option is shown in the table below.

Table 26: 2021 Build AM Level of Service and Delay (in seconds)

Intersection (Synchro Node Number)	2021 Build AM	
	Overall Intersection Delay (LOS)	Approach Delay (LOS) of LOS E/F Movements
Blue Ridge Parkway Access and Fredrick Olmstead Way (4) - Unsignalized*	10.3 (B)	n/a
NC 191 (Brevard Road) and Blue Ridge Parkway Access (5) - Signalized	25.2 (C)	n/a
HE-0001 eastbound ramps (6)	12.0 B	n/a
HE-0001 westbound ramps (7)	10.7 (B)	n/a

* ICU Level of Service reported for unsignalized intersections

DocuSign Envelope ID: 5C03745C-4B01-4834-A65D-B77F558A4F46

Table 27: 2021 Build PM Level of Service and Delay (in seconds)

Intersection (Synchro Node Number)	2021 Build PM	
	Overall Intersection Delay (LOS)	Approach Delay (LOS) of LOS E/F Movements
Blue Ridge Parkway Access and Fredrick Olmstead Way (4) - Unsignalized*	11.5 (B)	n/a
NC 191 (Brevard Road) and Blue Ridge Parkway Access (5) - Signalized	30.5 (C)	n/a
HE-0001 eastbound ramps (6)	10.8 B	n/a
HE-0001 westbound ramps (7)	10.3 (B)	n/a

* ICU Level of Service reported for unsignalized intersections

Based on the Synchro analysis, the ramp terminal intersections would experience acceptable levels of service if the interchange had been completed in 2021.

2045 No-Build Scenario

The 2045 No-Build scenario was developed by adding planned projects to the 2021 Existing scenario. Specifically, the following change was made:

- NC 191 (Brevard Road) was converted from a two-lane facility to a four-lane facility (U-3403B)

Since the 2021 Existing network included the improvements at the NC 191 (Brevard Road) Interchange, no further laneage changes were made in the I-26 corridor.

DocuSign Envelope ID: 5C03745C-4B01-4834-A65D-B77F558A4F46

Table 28: 2045 No-Build AM Level of Service and Delay (in seconds)

Intersection (Synchro Node Number)	2045 No-Build AM	
	Overall Intersection Delay (LOS)	Approach Delay (LOS) of LOS E/F Movements
NC 191 (Brevard Road) and Commercial Access (1) - Signalized	13.7 (B)	**EBL - 73.1 (E)** **SBL - 61.1 (E)**
NC 191 (Brevard Road) and I-26 eastbound ramps (2) - Signalized	28.6 (C)	**WBL - 76.6 (E)** **NBL - 56.6 (E)**
NC 191 (Brevard Road) and I-26 westbound ramps (3) - Signalized	18.5 (B)	n/a
Blue Ridge Parkway Access and Fredrick Olmstead Way (4) - Unsignalized*	11.3 (B)	n/a
NC 191 (Brevard Road) and Blue Ridge Parkway Access (5) - Signalized	37.5 (D)	**EBL - 57.0 (E)** **NBL - 57.9 (E)**
HE-0001 eastbound ramps (6)	n/a	n/a
HE-0001 westbound ramps (7)	n/a	n/a
NC 146 (Long Shoals Road) and Clayton Road (8) - Signalized	27.8 (C)	**EBL - 83.1 (F)** **SBL - 62.7 (E)**
NC 146 (Long Shoals Road) and Ledbetter Road (9) - Unsignalized*	**498.8 (F)**	**NBL - 2936.1 (F)** **NBR - 228.6 (F)**
NC 146 (Long Shoals Road) and I-26 ramps (Single Point) (10) - Signalized	**104.3 (F)**	**EBL - 61.6 (E)** **EBT - 82.7 (F)** **SEL - 307.3 (F)** **NWL - 56.9 (E)**
NC 146 (Long Shoals Road) and I-26 westbound ramp (11) - Signalized	**196.0 (F)**	**EBT - 302.0 (F)** **NBR - 328.3 (F)**
NC 146 (Long Shoals Road) and Skyland Drive/Schenck Parkway (12) - Signalized	**61.7 (E)**	**EBL - 58.0 (E)** **EBT - 57.3 (E)** **WBL - 75.1 (E)** **WBT – 65.6 (E)** **NBT - 145.0 (F)** **SBL - 140.9 (F)** **SBT - 139.3 (F)**

* ICU Level of Service reported for unsignalized intersections

DocuSign Envelope ID: 5C03745C-4B01-4834-A65D-B77F558A4F46

Table 29: 2045 No-Build PM Level of Service and Delay (in seconds)

Intersection (Synchro Node Number)	2045 No-Build PM	
	Overall Intersection Delay (LOS)	Approach Delay (LOS) of LOS E/F Movements
NC 191 (Brevard Road) and Commercial Access (1) - Signalized	18.4 (B)	**EBL - 128.3 (F)** **SBL - 76.2 (E)**
NC 191 (Brevard Road) and I-26 eastbound ramps (2) - Signalized	**58.0 (E)**	**EBT - 81.7 (F)** **WBL - 111.8 (F)** **NBL - 104.2 (F)**
NC 191 (Brevard Road) and I-26 westbound ramps (3) - Signalized	20.2 (C)	**SBL - 59.0 (E)**
Blue Ridge Parkway Access and Fredrick Olmstead Way (4) - Unsignalized*	13.6 (B)	n/a
NC 191 (Brevard Road) and Blue Ridge Parkway Access (5) - Signalized	52.6 (D)	**EBL - 91.3 (F)** **WBL - 58.3 (E)** **WBT - 78.1 (E)** **WBR - 80.5 (F)** **NBL - 62.2 (E)** **SBL - 85.8 (F)**
HE-0001 eastbound ramps (6)	n/a	n/a
HE-0001 westbound ramps (7)	n/a	n/a
NC 146 (Long Shoals Road) and Clayton Road (8) - Signalized	27.2 (C)	**EBL - 97.8 (F)** **SBL - 66.8 (E)**
NC 146 (Long Shoals Road) and Ledbetter Road (9) - Unsignalized*	**unable to report**(F)**	**NBL - unable to report (F)** **NBR - 47.7 (E)** **WBL - 148.8 (F)**
NC 146 (Long Shoals Road) and I-26 ramps (Single Point) (10) - Signalized	**62.4 (E)**	**EBL - 61.4 (E)** **WBL - 121.3 (F)** **SEL - 167.1 (F)** **NWL - 59.4 (E)**
NC 146 (Long Shoals Road) and I-26 westbound ramp (11) - Signalized	**59.4 (E)**	**EBT - 109.3 (F)** **NBR - 167.8 (F)**

DocuSign Envelope ID: 5C03745C-4B01-4834-A65D-B77F558A4F46

Intersection (Synchro Node Number)	2045 No-Build PM	
	Overall Intersection Delay (LOS)	Approach Delay (LOS) of LOS E/F Movements
NC 146 (Long Shoals Road) and Skyland Drive/Schenck Parkway (12) - Signalized	**125.9 (F)**	**WBL - 77.1 (E) WBT - 182.3 (F) NBT - 206.4 (F) SBL - 216.0 (F) SBT - 208.7 (F) SBR - 275.0 (F)**

* ICU Level of Service reported for unsignalized intersections

**Synchro states the computation can't be defined due to the high delay

In the AM peak, the four intersections along NC 146 (Long Shoals Road) from Ledbetter Road to Schenk Parkway all experience LOS E or LOS F operations. Additionally, there are failing movements at other intersections. In the PM, the same four intersections along NC 146 (Long Shoals Road) experience LOS E or LOS F operations overall, as does the intersection of NC 191 (Brevard Road) and the eastbound ramp terminal intersection. As with the AM peak there are also failing movements at other intersections.

2045 Build Scenario

In this scenario, the proposed HE-0001 was added to the network. The interchange design assumed for this analysis is a standard diamond (the DDI configuration analysis data is provided in **Appendix T**), with all ramps merging or diverging from the right side of the Interstate. It was also assumed that the speed limit for all ramps would be 45 MPH and 35 MPH for the new access road. The only difference in the Synchro network for this option as compared to the Left Entrance/Exit scenario is the distance between the ramp junctions at the HE-0001 interchange. The level of service and delay at each intersection of the standard diamond scenario is the same as the corresponding interchanges in the Left Entrance/Exit scenario. As such, the table of results is only provided once, and is included in the Left Entrance/Exit scenario section.

2045 Build Scenario (Left Entrance/Exit for Westbound Ramps)

In this scenario, the proposed HE-0001 was added to the network. The interchange design assumed for this analysis is a standard diamond (the DDI configuration analysis data is provided in **Appendix T**), but with the westbound ramps merging or diverging from the left (west) side of the Interstate. As with the 2045 Build scenario, it was also assumed that the speed limit for all ramps would be 45 MPH and 35 MPH for the new access road.

DocuSign Envelope ID: 5C03745C-4B01-4834-A65D-B77F558A4F46

Table 30: 2045 Build AM Level of Service and Delay (in seconds)

Intersection (Synchro Node Number)	2045 Build AM	
	Overall Intersection Delay (LOS)	Approach Delay (LOS) of LOS E/F Movements
NC 191 (Brevard Road) and Commercial Access (1) - Signalized	11.8 (B)	**EBL - 61.4 (E)** **SBL - 61.1 (E)**
NC 191 (Brevard Road) and I-26 eastbound ramps (2) - Signalized	21.3 (C)	**NBL - 55.1 (E)**
NC 191 (Brevard Road) and I-26 westbound ramps (3) - Signalized	19.3 (B)	n/a
Blue Ridge Parkway Access and Fredrick Olmstead Way (4) - Unsignalized*	11.3 (B)	n/a
NC 191 (Brevard Road) and Blue Ridge Parkway Access (5) - Signalized	30.1 (C)	n/a
HE-0001 eastbound ramps (6)	**51.6 (F)**	**51.6 (F)**
HE-0001 westbound ramps (7)	17.8 (B)	n/a
NC 146 (Long Shoals Road) and Clayton Road (8) - Signalized	24.9 (C)	**EBL - 96.0 (F)** **SBL - 79.9 (E)**
NC 146 (Long Shoals Road) and Ledbetter Road (9) - Unsignalized*	**181.2 (F)**	**NBL - 885.3 (F)** **NBR - 112.4 (F)**
NC 146 (Long Shoals Road) and I-26 ramps (Single Point) (10) - Signalized	**120.3 (F)**	**EBL - 83.3 (F)** **WBL - 60.2 (E)** **SEL - 333.8 (F)** **NWL - 58.5 (E)**
NC 146 (Long Shoals Road) and I-26 westbound ramp (11) - Signalized	**200.2 (F)**	**EBT - 305.6 (F)** **NBR - 343.2 (F)**
NC 146 (Long Shoals Road) and Skyland Drive/Schenck Parkway (12) - Signalized	**66.7 (E)**	**EBL - 84.5 (F)** **EBT - 55.2 (E)** **WBL - 93.9 (F)** **WBT - 69.5 (E)** **NBT - 180.4 (F)** **SBL - 141.1 (F)** **SBT - 138.8 (F)**

* ICU Level of Service reported for unsignalized intersections

DocuSign Envelope ID: 5C03745C-4B01-4834-A65D-B77F558A4F46

Note that at the HE-0001 eastbound ramp intersection with the new connector road, the eastbound approach operates at **LOS F** in the 2045 Build scenario. The AM peak volume for the eastbound ramp approach is 506 vehicles. The maximum queue for the eastbound ramp in the AM peak is 300 feet (based on the average of 10 SimTraffic runs). The projected queue is contained within the 325 feet storage lane provided. Thus, the decision was made to leave this intersection as unsignalized for this analysis.

Table 31: 2045 Build PM Level of Service and Delay (in seconds)

Intersection (Synchro Node Number)	2045 Build PM	
	Overall Intersection Delay (LOS)	Approach Delay (LOS) of LOS E/F Movements
NC 191 (Brevard Road) and Commercial Access (1) - Signalized	12.4 (B)	**EBL - 67.9 (E)** **SBL - 61.2 (E)**
NC 191 (Brevard Road) and I-26 eastbound ramps (2) - Signalized	26.2 (C)	**NBL - 64.3 (E)**
NC 191 (Brevard Road) and I-26 westbound ramps (3) - Signalized	19.1 (B)	n/a
Blue Ridge Parkway Access and Fredrick Olmstead Way (4) - Unsignalized*	13.7 (B)	n/a
NC 191 (Brevard Road) and Blue Ridge Parkway Access (5) - Signalized	39.4 (D)	**EBL - 70.0 (E)** **EBT - 59.3 (E)** **WBL - 70.9 (E)** **WBT - 70.7 (E)** **NBL - 61.1 (E)**
HE-0001 eastbound ramps (6)	25.5 (D)	25.5 (D)
HE-0001 westbound ramps (7)	20.9 (C)	n/a
NC 146 (Long Shoals Road) and Clayton Road (8) - Signalized	21.7 (C)	**EBL - 88.6 (F)** **SBL - 71.6 (E)**
NC 146 (Long Shoals Road) and Ledbetter Road (9) - Unsignalized*	**1861.7 (F)**	**NBL - 20193.3 (F)** **WBL - 56.4 (F)**
NC 146 (Long Shoals Road) and I-26 ramps (Single Point) (10) - Signalized	**74.4 (E)**	**EBL - 73.6 (E)** **WBL - 125.2 (F)** **SEL - 185.7 (F)**

DocuSign Envelope ID: 5C03745C-4B01-4834-A65D-B77F558A4F46

Intersection (Synchro Node Number)	2045 Build PM	
	Overall Intersection Delay (LOS)	Approach Delay (LOS) of LOS E/F Movements
NC 146 (Long Shoals Road) and I-26 westbound ramp (11) - Signalized	**71.7 (E)**	**EBT - 135.8 (F)** **NBR - 183.5 (F)**
NC 146 (Long Shoals Road) and Skyland Drive/Schenck Parkway (12) - Signalized	**125.3 (F)**	**WBL - 77.1 (E)** **WBT - 181.1 (F)** **NBT - 206.4 (F)** **SBL - 216.0 (F)** **SBT - 208.7 (F)** **SBR - 275.0 (F)**

* ICU Level of Service reported for unsignalized intersections

Table 32: Comparison of 2045 No-Build and Build AM Level of Service and Delay (in seconds)

Intersection (Synchro Node Number)	2045 AM	
	Overall Intersection Delay (LOS) No-Build / Build	Approach Delay (LOS) of LOS E/F Movements No-Build / Build
NC 191 (Brevard Road) and Commercial Access (1) - Signalized	13.7 (B) / 11.8 (B)	**EBL - 73.1 (E) / 61.4 (E)** **SBL – no change**
NC 191 (Brevard Road) and I-26 eastbound ramps (2) - Signalized	28.6 (C) / 21.3 (C)	**WBL - 76.6 (E) /** not failing **NBL - 56.6 (E) / 55.1 (E)**
NC 191 (Brevard Road) and I-26 westbound ramps (3) - Signalized	18.5 (B) / 19.3 (B)	n/a
Blue Ridge Parkway Access and Fredrick Olmstead Way (4) - Unsignalized*	11.3 (B) – no change	n/a
NC 191 (Brevard Road) and Blue Ridge Parkway Access (5) - Signalized	37.5 (D) / 30.1 (C)	**EBL - 57.0 (E) /** not failing **NBL - 57.9 (E) /** not failing
NC 146 (Long Shoals Road) and Clayton Road (8) - Signalized	27.8 (C) / 24.9 (C)	**EBL - 83.1 (F) / 96.0 (F)** **SBL - 62.7 (E) / 79.9 (E)**
NC 146 (Long Shoals Road) and Ledbetter Road (9) - Unsignalized*	**498.8 (F) / 181.2 (F)**	**NBL - 2936.1 (F) / 885.3 (F)** **NBR - 228.6 (F) / 112.4 (F)**

DocuSign Envelope ID: 5C03745C-4B01-4834-A65D-B77F558A4F46

Intersection (Synchro Node Number)	2045 AM	
	Overall Intersection Delay (LOS) No-Build / Build	Approach Delay (LOS) of LOS E/F Movements No-Build / Build
NC 146 (Long Shoals Road) and I-26 ramps (Single Point) (10) - Signalized	**104.3 (F) / 120.3 (F)**	**EBL - 61.6 (E) / 83.3 (F)** **EBT - 82.7 (F) / 60.2 (E)** **SEL - 307.3 (F) / 333.8 (F)** **NWL - 56.9 (E) / 58.5 (E)**
NC 146 (Long Shoals Road) and I-26 westbound ramp (11) - Signalized	**196.0 (F) / 200.2 (F)**	**EBT - 302.0 (F) / 305.6 (F)** **NBR - 328.3 (F) / 343.2 (F)**
NC 146 (Long Shoals Road) and Skyland Drive/Schenck Parkway (12) - Signalized	**61.7 (E) / 66.7 (E)**	**EBL - 58.0 (E) / 84.5 (F)** **EBT - 57.3 (E) / 55.2 (E)** **WBL - 75.1 (E) / 93.9 (F)** **WBT – 65.6 (E) / 69.5 (E)** **NBT - 145.0 (F) / 180.4 (F)** **SBL - 140.9 (F) / 141.1 (F)** **SBT - 139.3 (F) / 138.8 (F)**

* ICU Level of Service reported for unsignalized intersections

Table 33: Comparison of 2045 No-Build and Build PM Level of Service and Delay (in seconds)

Intersection (Synchro Node Number)	2045 PM	
	Overall Intersection Delay (LOS) No-Build / Build	Approach Delay (LOS) of LOS E/F Movements No-Build / Build
NC 191 (Brevard Road) and Commercial Access (1) - Signalized	18.4 (B) / 12.4 (B)	**EBL - 128.3 (F) / 67.9 (E)** **SBL - 76.2 (E) / 61.2 (E)**
NC 191 (Brevard Road) and I-26 eastbound ramps (2) - Signalized	**58.0 (E) /** 26.2 (C)	**EBT - 81.7 (F) /** not failing **WBL - 111.8 (F) /** not failing **NBL - 104.2 (F) / 64.3 (E)**
NC 191 (Brevard Road) and I-26 westbound ramps (3) - Signalized	20.2 (C) / 19.1 (B)	**SBL - 59.0 (E) /** not failing
Blue Ridge Parkway Access and Fredrick Olmstead Way (4) - Unsignalized*	13.6 (B) / 13.7 (B)	n/a

DocuSign Envelope ID: 5C03745C-4B01-4834-A65D-B77F558A4F46

Intersection (Synchro Node Number)	2045 PM	
	Overall Intersection Delay (LOS) No-Build / Build	Approach Delay (LOS) of LOS E/F Movements No-Build / Build
NC 191 (Brevard Road) and Blue Ridge Parkway Access (5) - Signalized	52.6 (D) / 39.4 (D)	**EBL - 91.3 (F) / 70.0 (E)** **EBT -** not failing **/ 59.3 (E)** **WBL - 58.3 (E) / 70.9 (E)** **WBT - 78.1 (E) / 70.7 (E)** **WBR - 80.5 (F) /** not failing **NBL - 62.2 (E) / 61.1 (E)** **SBL - 85.8 (F) /** not failing
NC 146 (Long Shoals Road) and Clayton Road (8) - Signalized	27.2 (C) / 21.7 (C)	**EBL - 97.8 (F) / 88.6 (F)** **SBL - 66.8 (E) / 71.6 (E)**
NC 146 (Long Shoals Road) and Ledbetter Road (9) - Unsignalized*	**unable to report** (F) / 1861.7 (F)**	**NBL - unable to report (F) / 20193.3 (F)** **NBR - 47.7 (E) /** not failing **WBL - 148.8 (F) / 56.4 (F)**
NC 146 (Long Shoals Road) and I-26 ramps (Single Point) (10) - Signalized	**62.4 (E) / 74.4 (E)**	**EBL - 61.4 (E) / 73.6 (E)** **WBL - 121.3 (F) / 125.2 (F)** **SEL - 167.1 (F) / 185.7 (F)** **NWL - 59.4 (E) /** not failing
NC 146 (Long Shoals Road) and I-26 westbound ramp (11) - Signalized	**59.4 (E) / 71.7 (E)**	**EBT - 109.3 (F) / 135.8 (F)** **NBR - 167.8 (F) / 183.5 (F)**
NC 146 (Long Shoals Road) and Skyland Drive/Schenck Parkway (12) - Signalized	**125.9 (F) / 125.3 (F)**	**WBL - 77.1 (E) – no change** **WBT - 182.3 (F) / 181.1 (F)** **NBT - 206.4 (F) / no change** **SBL - 216.0 (F) / no change** **SBT - 208.7 (F) / no change** **SBR - 275.0 (F) / no change**

* ICU Level of Service reported for unsignalized intersections

**Synchro states the computation can't be defined due to the high delay

The construction of the HE-0001 interchange reduces projected volumes on NC 191 and relieves congestion on the Connector Road by providing an alternate pathway to I-26 from the western portion of the study area. Not surprisingly, the 2045 Build delay along NC 191 (Brevard Road) are improved from the No-Build conditions at most intersections. The overall intersection LOS improves from D to C at intersection 5, NC 191 (Brevard Road) and Blue Ridge Parkway Access in the AM peak. The overall intersection LOS also improves from E to C at intersection 2, NC 191 (Brevard Road) and I-26 eastbound ramps in the PM peak. While there are individual movement that experience higher delay in the Build scenario as compared to the No-Build, all intersections maintain or improve with respect to overall level of service.

DocuSign Envelope ID: 5C03745C-4B01-4834-A65D-B77F558A4F46

A comparison of the 2045 No-Build and 2045 Build levels of service along the NC 146 (Long Shoals Road) corridor shows that the HE-0001 project does not change the overall level of service at any interchange. However, there are several individual movements that experience higher delay in the Build scenario as compared to the No-Build. Tables 34 and 35, above, detail each change.

Table 34: Summary of Level of Service and Delay (in seconds)

Intersection	2021 No-Build		2045 No-Build		2045 Build	
	AM Delay (LOS)	PM Delay (LOS)	AM Delay (LOS)	PM Delay (LOS)	AM Delay (LOS)	PM Delay (LOS)
NC 191 (Brevard Road) and Commercial Access (1) - Signalized	11.9 (B)	9.2 (A)	13.7 (B)	18.4 (B)	11.8 (B)	12.4 (B)
NC 191 (Brevard Road) and I-26 eastbound ramps (2) - Signalized	17.9 (B)	24.1 (C)	28.6 (C)	**58.0 (E)**	21.3 (C)	26.2 (C)
NC 191 (Brevard Road) and I-26 westbound ramps (3) - Signalized	22.0 (C)	20.0 (B)	18.5 (B)	20.2 (C)	19.3 (B)	19.1 (B)
Blue Ridge Parkway Access and Fredrick Olmstead Way (4) - Unsignalized*	10.3 (B)	11.4 (B)	11.3 (B)	13.6 (B)	11.3 (B)	13.7 (B)
NC 191 (Brevard Road) and Blue Ridge Parkway Access (5) - Signalized	10.8 (B)	19.0 (B)	37.5 (D)	52.6 (D)	30.1 (C)	39.4 (D)
HE-0001 eastbound ramps (6)	n/a	n/a	n/a	n/a	**51.6 (F)**	25.5 (D)
HE-0001 westbound ramps (7)	n/a	n/a	n/a	n/a	17.8 (B)	20.9 (C)
NC 146 (Long Shoals Road) and Clayton Road (8) - Signalized	19.4 (B)	18.2 (B)	27.8 (C)	27.2 (C)	24.9 (C)	21.7 (C)

DocuSign Envelope ID: 5C03745C-4B01-4834-A65D-B77F558A4F46

Intersection	2021 No-Build		2045 No-Build		2045 Build	
	AM Delay (LOS)	PM Delay (LOS)	AM Delay (LOS)	PM Delay (LOS)	AM Delay (LOS)	PM Delay (LOS)
NC 146 (Long Shoals Road) and Ledbetter Road (9) - Unsignalized*	26.3 (D)	30.7 (D)	**498.8 (F)**	**unable to report** (F)**	**181.2 (F)**	**1861.7 (F)**
NC 146 (Long Shoals Road) and I-26 ramps (Single Point) (10) - Signalized	46.7 (D)	27.1 (C)	**104.3 (F)**	**62.4 (E)**	**120.3 (F)**	**74.4 (E)**
NC 146 (Long Shoals Road) and I-26 westbound ramp (11) - Signalized	**65.2 (E)**	18.4 (B)	**196.0 (F)**	**59.4 (E)**	**200.2 (F)**	**71.7 (E)**
NC 146 (Long Shoals Road) and Skyland Drive/Schenck Parkway (12) - Signalized	27.7 (C)	38.4 (D)	**61.7 (E)**	**125.9 (F)**	**66.7 (E)**	**125.3 (F)**

* ICU Level of Service reported for unsignalized intersections

**Synchro states the computation can't be defined due to the high delay

After completion of the initial analysis, NCDOT suggested using a DDI to connect the new roadway to I-26. Based on the comparison of operations between the standard diamond and the DDI, the interchange type chosen is not expected to substantially affect the analysis results at any other study intersection. The following section summarizes the results of that additional analysis. (The full analysis report is provided in **Appendix T**).

Scenario 1 – Left Entrance-Exit

At the HE-0001 eastbound ramp intersection with NC 191 Connector, the southeast-bound right-turn operates at LOS F in the AM Peak. This result is based on the HCM 6th edition result for a stop-controlled movement. However, this movement runs under yield control. To provide a more accurate result of the operations of this movement, ten SimTraffic runs were completed and compiled.

Based on these runs, the maximum queue for the southeast-bound ramp is 265 feet and 189 feet in the AM and PM peaks respectively. The projected queue is contained within the 325 feet storage lane provided. Based on the average of the ten runs, the delay for this approach is 8.6 seconds per vehicle (sec/veh) in the AM peak and 5.7 sec/veh in the PM peak. Both delay

DocuSign Envelope ID: 5C03745C-4B01-4834-A65D-B77F558A4F46

values are level of service (LOS) A. All other movements operate at LOS D or better in both peak periods.

Scenario 2 – DDI (Signalized Eastbound Off Ramp)
Overall, the intersections operate at LOS A or LOS B in both peak periods. While the design operates acceptably with regard to level of service, additional analysis is recommended regarding the 175' westbound auxiliary lane to determine the need for the lane and the best length should the lane be included.

Scenario 3 – DDI (Unsignalized Eastbound Off Ramp)
During the SimTraffic simulation, there are several times when the traffic from the eastbound off ramp that desires to merge with the westbound connector road comes to a complete stop because of inadequate room to complete their merge maneuver. If this option is pursued, we recommend extending the merge lane. Also, based on the average of 10 SimTraffic runs, this scenario has the highest travel time and total delay in the AM peak and lowest travel time and total delay in the PM peak compared to the other scenarios.

The following table provides a comparison of the analysis results from the standard diamond configuration, DDI with signalized ramp terminals, and a DDI with an unsignalized eastbound off ramp terminal. (Note that, due to the differing ramp terminal configurations, ordinal directions are used in the ramp descriptions).

Table 35: DDI and Standard Diamond Comparison

2045 Build Scenario	Left Entrance Exit					Diverging Diamond Interchange						Diverging Diamond Interchange - Unsignalized SB Off-Ramp					
Node #	Intersection	Approach	Lane Group	Level of Service (Delay) (sec/veh)		Node #	Intersection	Approach	Lane Group	Level of Service (Delay) (sec/veh)		Node #	Intersection	Approach	Lane Group	Level of Service (Delay) (sec/veh)	
				AM	PM					AM	PM					AM	PM
6*	HE-0001 SEB Ramp and NC 191 Connector (Unsignalized)	**Overall**				6	HE-0001 SB Off-Ramp and NC 191 Connector	**Overall**		**B (10.8)**	**A (6.2)**	6	HE-0001 SB Off-Ramp and NC 191 Connector	**Overall**		**-**	**-**
		EB	T	-	-			EB	T	-	-			EB	T	-	-
			R	-	-			WB	T	B (11.0)	A (6.8)			WB	T	-	-
		WB	TL	A (8.2)	A (8.7)			SB	R	C (24.0)	B (18.7)			SB	R	-	-
		SB	T	-	-												
			R	F (51.6)** A (8.6)***	D (25.5)** A (5.7)***												
7	HE-0001 NWB Ramp and NC 191 Connector (Signalized)	**Overall**		**B (17.8)**	**C (20.9)**	7	NC 191 Connector WB and NC 191 Connector EB	**Overall**		**B (19.7)**	**B (18.9)**	7	NC 191 Connector WB and NC 191 Connector EB	**Overall**		**B (15.9)**	**B (18.2)**
		EB	L	B (18.1)	B (19.0)			EB	T	B (12.7)	B (17.5)			EB	T	B (16.4)	B (17.4)
		NB	TL	B (17.5)	C (23.4)			WB	T	C (25.3)	C (20.9)			WB	T	B (15.6)	B (19.3)

Node #	Intersection	Approach	Lane Group	95th Percentile Queue (feet)**** (Synchro)		Node #	Intersection	Approach	Lane Group	95th Percentile Queue (feet) (Synchro)		Node #	Intersection	Approach	Lane Group	95th Percentile Queue (feet) (Synchro)	
				AM	PM					AM	PM					AM	PM
6*	HE-0001 SEB Ramp and NC 191 Connector (Unsignalized)	EB	T	-	-	6	HE-0001 SB Off-Ramp and NC 191 Connector	EB	T	0	0	6	HE-0001 SB Off-Ramp and NC 191 Connector	EB	T	-	-
			R	-	-			WB	T	m#70	35			WB	T	-	-
		WB	TL	0	0			SB	R	#285	222			SB	R	-	-
		SB	T	-	-												
			R	325	175												
7	HE-0001 NWB Ramp and NC 191 Connector (Signalized)	EB	L	174	245	7	NC 191 Connector WB and NC 191 Connector EB	EB	T	138	242	7	NC 191 Connector WB and NC 191 Connector EB	EB	T	170	242
		NB	TL	211	#221			WB	T	#281	201			WB	T	196	194

DocuSign Envelope ID: 5C03745C-4B01-4834-A65D-B77F558A4F46

Node #	Intersection	Approach	Lane Group	Max Queue (feet) (SimTraffic)		Node #	Intersection	Approach	Lane Group	Max Queue (feet) (SimTraffic)		Node #	Intersection	Approach	Lane Group	Max Queue (feet) (SimTraffic)	
				AM	PM					AM	PM					AM	PM
6*	HE-0001 SEB Ramp and NC 191 Connector (Unsignalized)	EB	T	-	49	6	HE-0001 SB Off-Ramp and NC 191 Connector	EB	T	88	220	6	HE-0001 SB Off-Ramp and NC 191 Connector	EB	T	93	153
			R	10	44			WB	T	126	111			WB	T	14	7
		WB	TL	5	12			SB	R	238	233			SB	R	4	9
		SB	T	12	18												
			R	265	189												
7	HE-0001 NWB Ramp and NC 191 Connector (Signalized)	EB	L	209	240	7	NC 191 Connector WB and NC 191 Connector EB	EB	T	80	80	7	NC 191 Connector WB and NC 191 Connector EB	EB	T	79	81
		NB	TL	225	240			WB	T	310	299			WB	T	239	264

Note: volume to capacity ratios (v/c) for all movements are less than 1.0
*LOS, Delay, and 95% Queue for unsignalized intersections are reported from HCM 6th editior
**The HCM 6th edition result is based on stop-control while this movement actually runs under
***SimTraffic delay based on the average of 10 runs
****95% Queue for unsignalized intersections is calculated as 95% Q (veh) (rounded up to nearest inte
m - queuing is metered by upstream intersection
- indicates that the volume for the 95th percentile cycle exceeds capacity

DocuSign Envelope ID: 5C03745C-4B01-4834-A65D-B77F558A4F46

2.3 SIDRA Analysis

In addition to the Synchro analysis performed on the local road network, the proposed roundabout (HE-0001 internal intersection) was analyzed in SIDRA. For the purpose of this IAR, only the 2045 Build scenario was analyzed.

The HE-0001 internal intersection roundabout was initially analyzed as a single lane roundabout. This version of the roundabout does not provide adequate operations. Next, bypass lanes were added for all approaches. While all movements operate at LOD D or better in the design year, one approach (west approach) experiences a degree of saturation of 0.88 in the AM peak (just over the recommended maximum of 0.85).

Table 36: 2045 Build SIDRA Analysis

	Approaches								Overall Intersection
	South		East		North		West		
	Delay (LOS)	Deg of Sat.	LOS	Deg of Sat.	Delay (LOS)	Deg of Sat.	Delay (LOS)	Deg of Sat.	
AM	11.6 (B)	0.425	10.5 (B)	0.579	7.7 (A)	0.328	16.5 (C)	0.877	16.5 (C)
PM	31.1 (D)	0.790	9.4 (A)	0.589	17.0 (C)	0.714	24.7 (C)	0.790	18.3 (C)

2.4 Safety Evaluation

The following section provides information relating to the safety analyses associated with the project.

Crash Analysis

A crash analysis was performed for the study area to identify existing crash patterns. Specifically, crash data was analyzed for the following areas:

- Strip analysis of I-26 from 2000’ South of NC 146 (Long Shoals Road) to Bridge #100238 (over Pond Road) with a 0’ y-line (Buncombe County)
- Strip analysis of NC 146 (Long Shoals Road) from Clayton Road to Skyland Inn Drive/Schenck Parkway with a 150’ y-line
- Strip analysis of NC 191 (Brevard Road) from Hampton Inn Suites/Petco Driveway to Pine Lane/New I-26 westbound ramp with a 150’ y-line
- Intersection analysis of Blue Ridge Parkway Access and Frederick Law Olmsted Way

DocuSign Envelope ID: 5C03745C-4B01-4834-A65D-B77F558A4F46

The following section provides a summary of crash data and discusses the potential effects of the HE-0001 project.

Table 37: I-26 Section Crash Summary

Crash Type	Total Crashes (#)	Total Crashes (%)	Crash Rate (100 million Vehicle Miles Travelled (MVMT))	Statewide Average Crash Rate (100 MVMT)*	Critical Crash Rate (100 MVMT)
Total Crashes	1359	100.00	160.46	127.77	134.22
Fatal Crashes	6	0.44	0.71	0.40	0.82
Non-Fatal Injury Crashes	288	21.19	34.0	29.3	32.42
Property Damage Only Crashes	1065	78.37	--	--	--
Night Crashes	261	19.21	30.82	31.14	34.35
Wet Crashes	214	15.75	25.27	25.55	28.47

Crash Analysis Study Dates: January 1, 2014 to December 31, 2018. Dates differed for this section as crash data was included for the 5 years prior to the start of the I-26 construction project for this section.

*The Statewide average crash rates shown are the 5-year crash rates from 2016-2020 for Urban Interstates

Of the 1,359 total crashes, 932 (68.6%) were identified as rear end, slow or stop crashes. A rear end, slow or stop crash is defined as a rear end collision with one vehicle going at a slower speed, slowing down, or stopping. On an interstate facility, it is reasonable to assume that these are congestion-related crashes with the slowing of vehicles caused by over capacity conditions on I-26 and ramp queues.

The total crash rate for this section is higher than both the statewide average crash rate and the critical crash rate. Similarly, the non-fatal injury crash rate was higher than the statewide averages and the critical crash rate. However, the fatal crash rate, night crash rate, and wet crash rate are below the critical crash rate for this section.

DocuSign Envelope ID: 5C03745C-4B01-4834-A65D-B77F558A4F46

I-26 is currently being widened to an eight-lane facility (four lanes in each direction). This should increase the capacity of the facility and lessen the propensity for the rear end, slow or stop crashes. Further, the analysis of the HE-0001 interchange with the Connector Road shows minimal queuing at the ramp junctions. So, HE-0001 interchange ramp queues are not expected to increase the risk of this crash type.

Table 38: NC 191 (Brevard Road) Section Crash Summary

Crash Type	Total Crashes (#)	Total Crashes (%)	Crash Rate (100 million Vehicle Miles Travelled (MVMT))	Statewide Average Crash Rate (100 MVMT)*	Critical Crash Rate (100 MVMT)
Total Crashes	119	100.00	755.96	287.36	360.82
Fatal Crashes	0	0.00	0	1.06	8.51
Non-Fatal Injury Crashes	30	25.21	190.58	81.84	122.53
Property Damage Only Crashes	89	74.79	--	--	--
Night Crashes	19	15.97	120.70	63.52	99.74
Wet Crashes	14	11.76	88.94	44.06	74.76

Crash Analysis Study Dates: April 1, 2016 to March 31, 2021

*The Statewide average crash rates shown are the 5-year crash rates from 2016-2020 for NC urban routes

Of the 119 total crashes, 58 (48.7%) were identified as rear end, slow or stop crashes. A rear end, slow or stop crash is defined as a rear end collision with one vehicle going at a slower speed, slowing down, or stopping. On an arterial facility, it is reasonable to assume that these are congestion-related crashes with the slowing of vehicles caused by intersection delay.

An additional 25 crashes (21.0%) were identified as sideswipe, same direction. Sideswipe, same direction crashes are defined as the collision of motor vehicles, traveling in the same

DocuSign Envelope ID: 5C03745C-4B01-4834-A65D-B77F558A4F46

direction, in which contact usually results from attempting to pass too closely, skidding, or other side-to-side initial contact. Common causes of sideswipe, same direction crashes are distracted divers, drivers failing to perform lane changes safely, and poor road conditions.

The HE-0001 project is expected to reduce the volume of traffic on NC 191 (Brevard Road) in this section. The traffic forecast (dated June 29, 2021) has a 2045 No-Build volume of 46,600 vpd on NC 191 (Brevard Road) just west of the NC 191 (Brevard Road) interchange with I-26. The Build forecast for this location is 33,600. Also, the HE-0001 project does not change access or facility design for NC 191 (Brevard Road) in the area around the NC 191 (Brevard Road) and I-26 interchange. As such, the project is not expected to increase the risk of these crash types.

Table 39: NC 146 (Long Shoals Road) Section Crash Summary

Crash Type	Total Crashes (#)	Total Crashes (%)	Crash Rate (100 million Vehicle Miles Travelled (MVMT))	Statewide Average Crash Rate (100 MVMT)*	Critical Crash Rate (100 MVMT)
Total Crashes	280	100.00	772.15	287.36	335.05
Fatal Crashes	0	0.00	0	1.06	5.25
Non-Fatal Injury Crashes	43	15.36	118.58	81.84	107.93
Property Damage Only Crashes	237	84.64	--	--	--
Night Crashes	70	25.00	193.04	63.52	86.67
Wet Crashes	49	17.50	135.13	44.06	63.57

Crash Analysis Study Dates: April 1, 2016 to March 31, 2021

*The Statewide average crash rates shown are the 5-year crash rates from 2016-2020 for NC urban routes

Of the 280 total crashes, 116 (41.4%) were identified as rear end, slow or stop crashes. A rear end, slow or stop crash is defined as a rear end collision with one vehicle going at a slower speed, slowing down, or stopping. On an arterial facility, it is reasonable to assume that these are congestion-related crashes with the slowing of vehicles caused by intersection delay.

DocuSign Envelope ID: 5C03745C-4B01-4834-A65D-B77F558A4F46

An additional 48 crashes (17.1%) were identified as sideswipe, same direction. Sideswipe, same direction crashes are defined as the collision of motor vehicles, traveling in the same direction, in which contact usually results from attempting to pass too closely, skidding, or other side-to-side initial contact. Common causes of sideswipe, same direction crashes are distracted drivers, drivers failing to perform lane changes safely, and poor road conditions.

The HE-0001 project is expected to reduce the volume of traffic on NC 146 (Long Shoals Road) in this section. The traffic forecast (dated June 29, 2021) has a 2045 No-Build volume of 37,600 vpd on NC 146 (Long Shoals Road) just west of the NC 146 (Long Shoals Road) interchange with I-26. The Build forecast for this location is 31,900. Also, the HE-0001 project does not change access or facility design for NC 146 (Long Shoals Road) in the area around the NC 146 (Long Shoals Road) and I-26 interchange. As such, the project is not expected to increase the risk of these crash types.

Table 40: NC 191 (Brevard Road) and Blue Ridge Parkway Access Intersection Crash Summary

Crash Type	Total Crashes (#)	Total Crashes (%)
Total Crashes	11	100.00
Fatal Crashes	0	0.00
Non-Fatal Injury Crashes	3	27.27
Property Damage Only Crashes	8	72.73
Night Crashes	3	27.27
Wet Crashes	4	36.36

Crash Analysis Study Dates: April 1, 2016 to March 31, 2021

Of the 11 total crashes, 5 (45.5%) were identified as rear end, slow or stop crashes. A rear end, slow or stop crash is defined as a rear end collision with one vehicle going at a slower speed, slowing down, or stopping. On an arterial facility, it is reasonable to assume that these are congestion-related crashes with the slowing of vehicles caused by intersection delay.

An additional 2 crashes (18.2%) were identified as left turn, same roadway crashes. Left turn, same roadway crashes are defined as collision with both vehicles traveling on same roadway

DocuSign Envelope ID: 5C03745C-4B01-4834-A65D-B77F558A4F46

prior to one or both turning left. Congestion is often a contributing factor as vehicles attempting to turn left experience fewer gaps in oncoming traffic than similar roadways with less congestion.

The HE-0001 project is expected to reduce the volume of traffic on NC 191 (Brevard Road) in this section. The traffic forecast (dated June 29, 2021) has a 2045 No-Build volume of 32,000 vpd on NC 191 (Brevard Road) just north of the Blue Ridge Parkway Access intersection. The Build forecast for this location is 27,800. Also, there is a planned project to widen NC 191 (Brevard Road) from two lanes to four lanes.

Conversely, the project will add a fourth leg to the intersection of the NC 191 (Brevard Road) and Blue Ridge Parkway Access intersection, increasing conflict points and possibly increasing crashes at the intersection.

Presumably, the net effect of these changes will not result in an increase in crashes in this area.

Table 41: Blue Ridge Parkway Access and Fredrick Law Olmstead Way Intersection Crash Summary

Crash Type	Total Crashes (#)	Total Crashes (%)
Total Crashes	0	n/a
Fatal Crashes	0	0.00
Non-Fatal Injury Crashes	0	0.00
Property Damage Only Crashes	0	0.00
Night Crashes	0	0.00
Wet Crashes	0	0.00

Crash Analysis Study Dates: April 1, 2016 to March 31, 2021

An intersection crash analysis was also performed for the unsignalized intersection of Blue Ridge Parkway Access and Frederick Law Olmsted Way. No crashes were reported at this intersection during the crash analysis period (April 1, 2016 to March 31, 2021).

DocuSign Envelope ID: 5C03745C-4B01-4834-A65D-B77F558A4F46

Left Entrance/Exit

One of the project alternatives under consideration is a design for the new interchange that incorporates a westbound exit ramp that diverges from the left (west) side of I-26. Similarly, the westbound entrance ramp for the new interchange merges from the left side. The purpose of this alternative is to minimize construction on the east side of the project. The east side of the project is adjacent to land owned by the Biltmore Estate, land protected under Section 106 of the National Historic Preservation Act. I-26 is bifurcated in the area around the proposed interchange, meaning that there is room in-between the two sections of I-26 to construct the westbound ramps. To help mitigate any issues with driver expectancy, a signing plan was developed for the project that allowed ample time for driver movements. The signing plan can be found in **Appendix S.**

FHWA Safety Tool

NCDOT performed a safety analysis using the FHWA Interactive Highway Safety Design Model (IHSDM). As described in the FHWA website, the IHSDM "is a decision-support tool that provides estimates of a highway design's expected safety and operational performance." The safety analysis was based on draft Design 1 (left entrance/exit) and draft Design 2 (right entrance/exit). While additional refinement of those designs is expected, the safety analysis was performed on the available data to provide a comparison of the two concepts from a predictive cash model standpoint. Detailed data from the safety tool is provided in **Appendix R**. The results of the analysis are as follows:

Table 42: 2021 Crashes by Facility Component - Base Year, Right Side Ramps

Component	Total Crashes
Freeway segments, crashes:	37.4
Ramp segments, crashes:	1.2
Crossroad ramp terminals, crashes:	2.0
Estimated number of crashes per year	40.6

Table 43: 2021 Crashes by Facility Component - Base Year, Left Side Ramps

Component	Total Crashes
Freeway segments, crashes:	39.9
Ramp segments, crashes:	1.3
Crossroad ramp terminals, crashes:	3.1

DocuSign Envelope ID: 5C03745C-4B01-4834-A65D-B77F558A4F46

Estimated number of crashes per year	44.2

Table 44: Crashes by Facility Component - 2045 Future Year, Right Side Ramps

Component	Total Crashes
Freeway segments, crashes:	69.8
Ramp segments, crashes:	2.0
Crossroad ramp terminals, crashes:	5.2
Estimated number of crashes per year	77.0

Table 45: Crashes by Facility Component - 2045 Future Year, Left Side Ramps

Component	Total Crashes
Freeway segments, crashes:	74.5
Ramp segments, crashes:	2.2
Crossroad ramp terminals, crashes:	9.1
Estimated number of crashes per year	85.9

As shown in the tables above, the model predicts around 9 more crashes per year with the left entrance/exit design as compared to the right entrance/exit scenario in 2045. As mentioned above, this data was based on preliminary design work. Additional safety enhancements could reduce the predicted crash totals for both alternatives.

Signing Plan

A signing plan was developed for the left entrance/exit option and is included in **Appendix R**. Since the two options being considered are similar in nature, only the left entrance/exit design was developed at this point. The plan shows that proper spacing is available for the required signage. Should the right entrance/exit option be chosen, the plan would be very similar, with the “Left” identifier removed from the westbound exit signs and the final Exit 35 sign being located on the right side of I-26.

DocuSign Envelope ID: 5C03745C-4B01-4834-A65D-B77F558A4F46

3 FHWA POLICY POINT 2 DISCUSSION

"The proposed access connects to a public road only and will provide for all traffic movements. Less than "full interchanges" may be considered on a case-by-case basis for applications requiring special access, such as managed lanes (e.g., transit or high occupancy vehicle and high occupancy toll lanes) or park and ride lots. The proposed access will be designed to meet or exceed current standards (23 CFR 625.2(a), 625.4(a)(2), and 655.603(d)). In rare instances where all basic movements are not provided by the proposed design, the report should include a full-interchange option with a comparison of the operational and safety analyses to the partial-interchange option. The report should also include the mitigation proposed to compensate for the missing movements, including wayfinding signage, impacts on local intersections, mitigation of driver expectation leading to wrong-way movements on ramps, etc. The report should describe whether future provision of a full interchange is precluded by the proposed design."

While there are multiple potential build scenarios being evaluated all are intended to provide full access to the proposed HE-0001 connector road. The Connector Road is also intended to be a public facility.

Also, all appropriate design standards have been met, including the left side entrance/exit requirements as applicable. Specifically, the left exit/entrance requirements per AASHTO Greenbook 10.9.6.4.1 and 10.9.6.4.2 are met. Per Chapter 3.2, Table 3-1, Calculated and Design Sight Distance. The sight distance requirements for a left exit, specifically, are:

- 1st design curve @ 60 mph design speed – 570' minimum
- 2nd design curve @ 50 mph design speed – 425' minimum
- 3rd design curve @ 35 mph design speed – 250' minimum

The proposed left exit design includes the following:

- 1st design curve @ 60 mph design speed – 570'
- 2nd design curve @ 50 mph design speed – 425'
- 3rd design curve @ 35 mph design speed – 910'

4 CONCLUSIONS AND RECOMMENDATIONS

The freeway analyses show that the Build scenarios operate at LOS D or better for all segments except in one time period. In the 4:30-4:45 PM interval, I-26 between NC 191 (Brevard Road) and the new interchange (basic freeway, Segment 5), I-26 between the new interchange and NC 146 (Long Shoals Road) interchange (basic freeway, Segment 9), and I-26 southeast of the NC 146 (Long Shoals Road) interchange (basic freeway Segment 13) operate at LOS E in only the eastbound direction. Further, the FREEVAL analysis does not show a difference between the right entrance/exit option as compared to the left entrance/exit design. Also, the build scenarios provide LOS D operations in all segments in 2040.

DocuSign Envelope ID: 5C03745C-4B01-4834-A65D-B77F558A4F46

Regarding the selection of an interchange type for the HE-0001 interchange, both the standard diamond and DDI options (with the modifications noted in this report) perform equally well with respect to level of service and delay in the design year. The selection of either interchange type will not affect the results of this IAR.

With regard to the surface streets in the study area, the project does not cause the overall intersection level of service to degrade at any location. While the project results in increases in delay for some individual movements, it also improves operations at others.

The HE-0001 internal intersection roundabout with bypass lanes added for all approaches, is expected to operate at LOS D or better in the design year. However, one approach (west approach) experiences a degree of saturation of 0.88 in the AM peak (just over the recommended maximum of 0.85).

While the project does add new conflict points to the interstate (ramp merges and diverges), there is a widening project currently underway for this section of I-26. With the predominant crash type on I-26 in the study area being rear-end, slow or stop crashes, presumably, the widening project will reduce the propensity for those crashes.

NCDOT's predictive crash analysis modeling does show an increase in crashes for the left entrance/exit design as compared to the right entrance exit alternative of around 9 percent in the base year and 10 percent in 2045.

DocuSign Envelope ID: 5C03745C-4B01-4834-A65D-B77F558A4F46

Appendices

DocuSign Envelope ID: 5C03745C-4B01-4834-A65D-B77F558A4F46

Appendix A – Figures

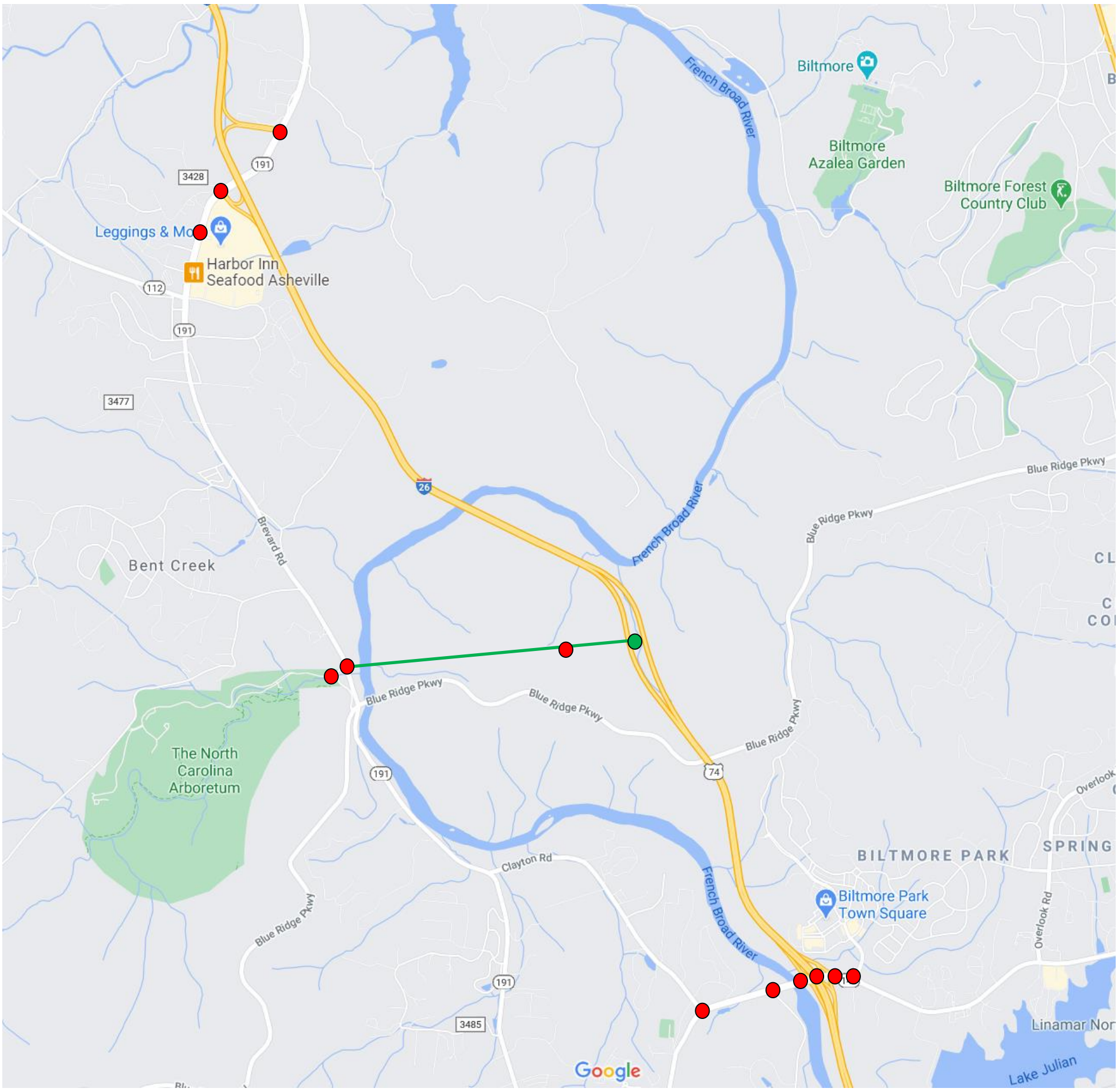

N

Figure 1 – Study Area

SHEET 1 OF 1

L E G E N D

- Intersection Analysis Locations
- Project Interchange Analysis Location
- Project Extension Location

TIP: HE-0001	**WBS:** 49473
COUNTY: Buncombe	**DIVISION:** 13
DATE: July 2021	
PREPARED BY: Three Oaks Engineering	
LOCATION: I-26/NC 191 Connector	
PROJECT: I-26 Future Interchange at NC 191 Connector (Exit 35)	

DocuSign Envelope ID: 5C03745C-4B01-4834-A65D-B77F558A4F46

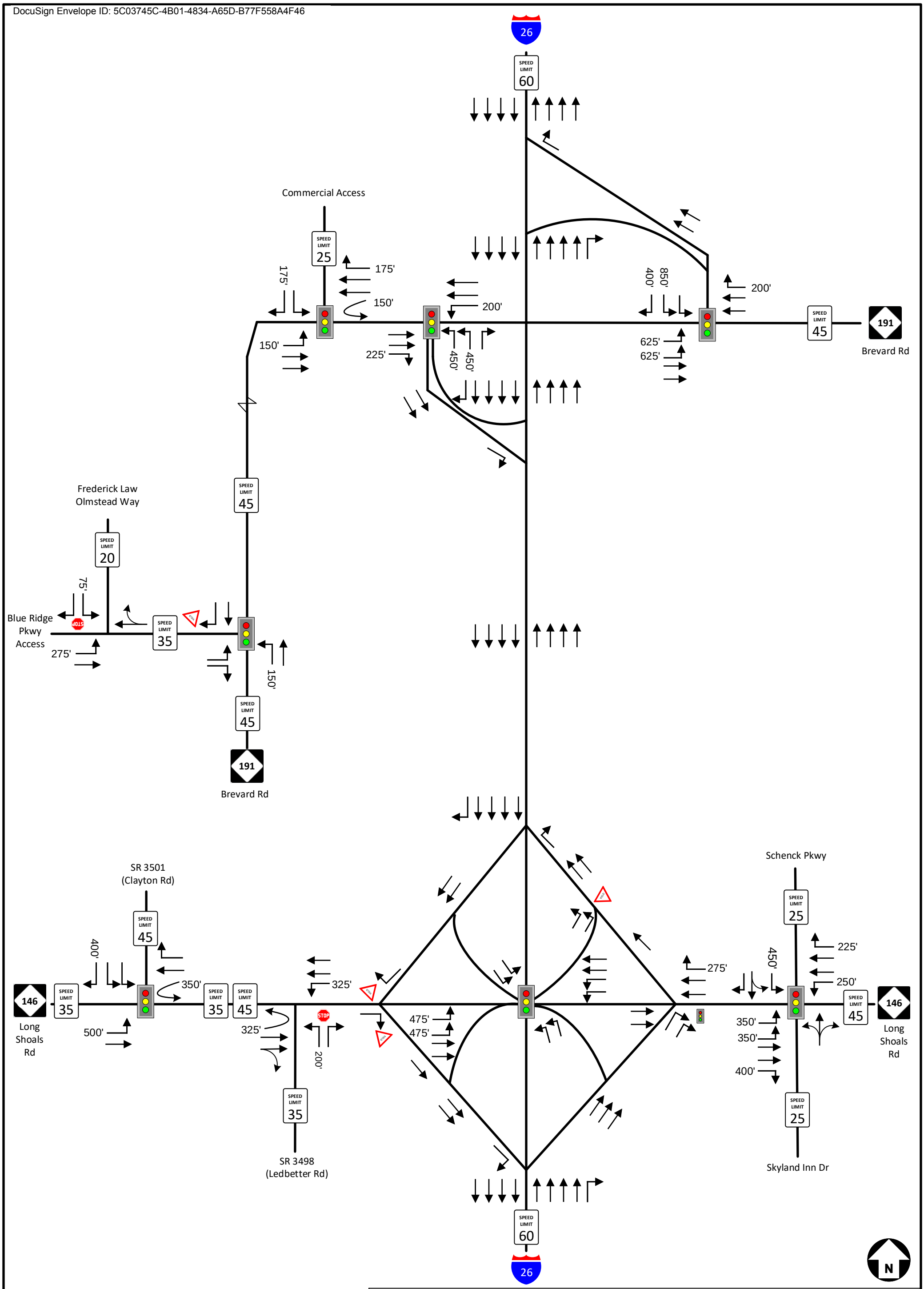

Figure 2 – 2021 Existing Laneage

SHEET 1 OF 1

L E G E N D

- Existing Roadway
- Existing Lanes
- XXX' Storage Distance
- Existing Signal
- Stop Sign
- Yield Sign
- Speed Limit 45

TIP: HE-0001	**WBS:** 49473
COUNTY: Buncombe	**DIVISION:** 13
DATE: July 2021	
PREPARED BY: Three Oaks Engineering	
LOCATION: I-26/NC 191 Connector	
PROJECT: I-26 Future Interchange at NC 191 Connector (Exit 35)	

DocuSign Envelope ID: 5C03745C-4B01-4834-A65D-B77F558A4F46

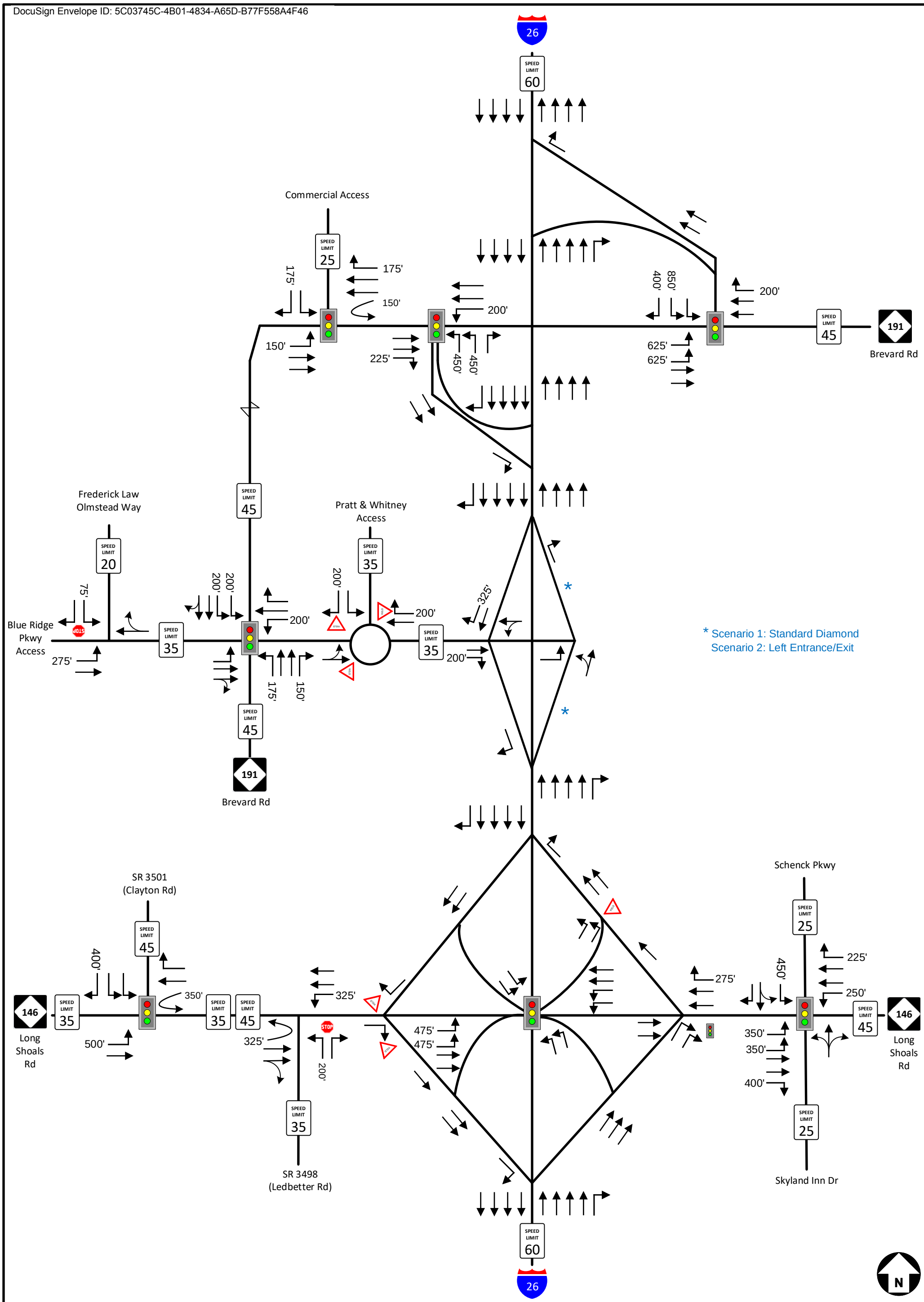

* Scenario 1: Standard Diamond
Scenario 2: Left Entrance/Exit

Figure 3 – 2021 Build Laneage

SHEET 1 OF 1

L E G E N D

- Existing Roadway
- Existing Lanes
- XXX' Storage Distance
- Existing Signal
- Stop Sign
- Yield Sign
- Speed Limit 45

TIP: HE-0001	**WBS:** 49473
COUNTY: Buncombe	**DIVISION:** 13
DATE: July 2021	
PREPARED BY: Three Oaks Engineering	
LOCATION: I-26/NC 191 Connector	
PROJECT: I-26 Future Interchange at NC 191 Connector (Exit 35)	

DocuSign Envelope ID: 5C03745C-4B01-4834-A65D-B77F558A4F46

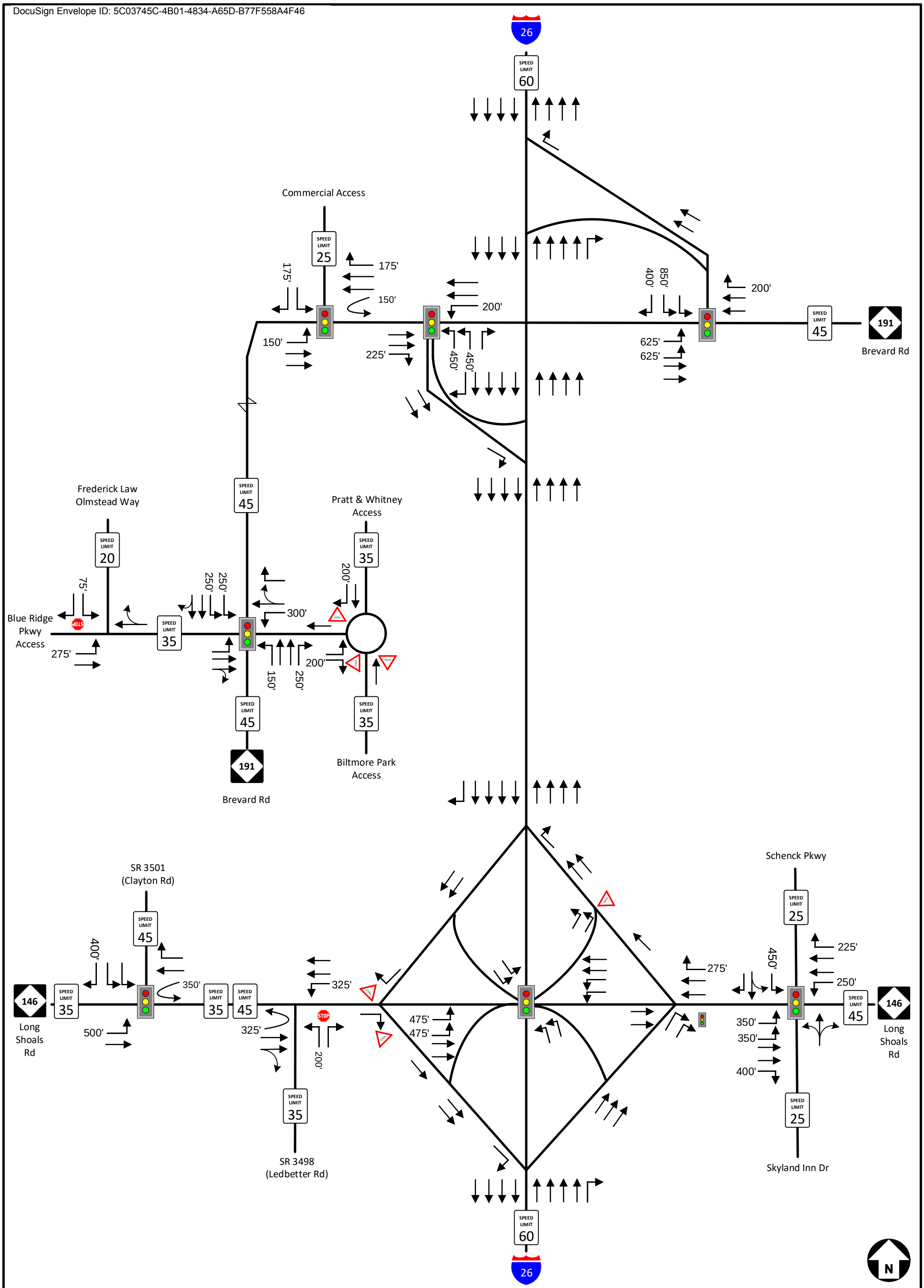

Figure 4 – 2045 No-Build Laneage

SHEET 1 OF 1

L E G E N D

- Existing Roadway
- Existing Lanes
- XXX' Storage Distance
- Existing Signal
- Stop Sign
- Yield Sign
- Speed Limit 45

TIP: HE-0001	**WBS:** 49473
COUNTY: Buncombe	**DIVISION:** 13
DATE: July 2021	
PREPARED BY: Three Oaks Engineering	
LOCATION: I-26/NC 191 Connector	
PROJECT: I-26 Future Interchange at NC 191 Connector (Exit 35)	

DocuSign Envelope ID: 5C03745C-4B01-4834-A65D-B77F558A4F46

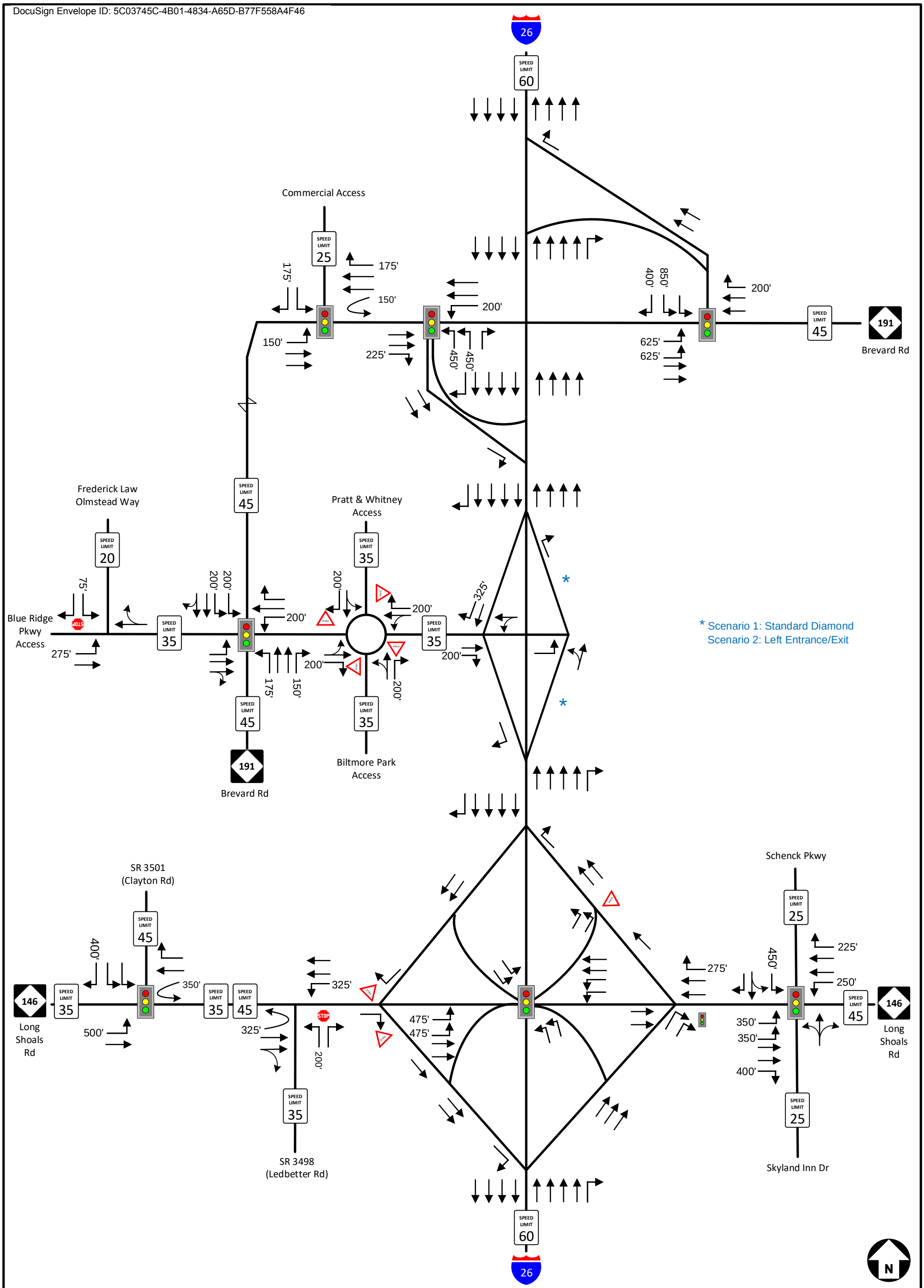

Figure 5 – 2045 Build Laneage

SHEET 1 OF 1

L E G E N D

- Existing Roadway
- Existing Lanes
- XXX' Storage Distance
- Existing Signal
- Stop Sign
- Yield Sign
- Speed Limit 45

TIP: HE-0001	**WBS:** 49473
COUNTY: Buncombe	**DIVISION:** 13
DATE: July 2021	
PREPARED BY: Three Oaks Engineering	
LOCATION: I-26/NC 191 Connector	
PROJECT: I-26 Future Interchange at NC 191 Connector (Exit 35)	

DocuSign Envelope ID: 5C03745C-4B01-4834-A65D-B77F558A4F46

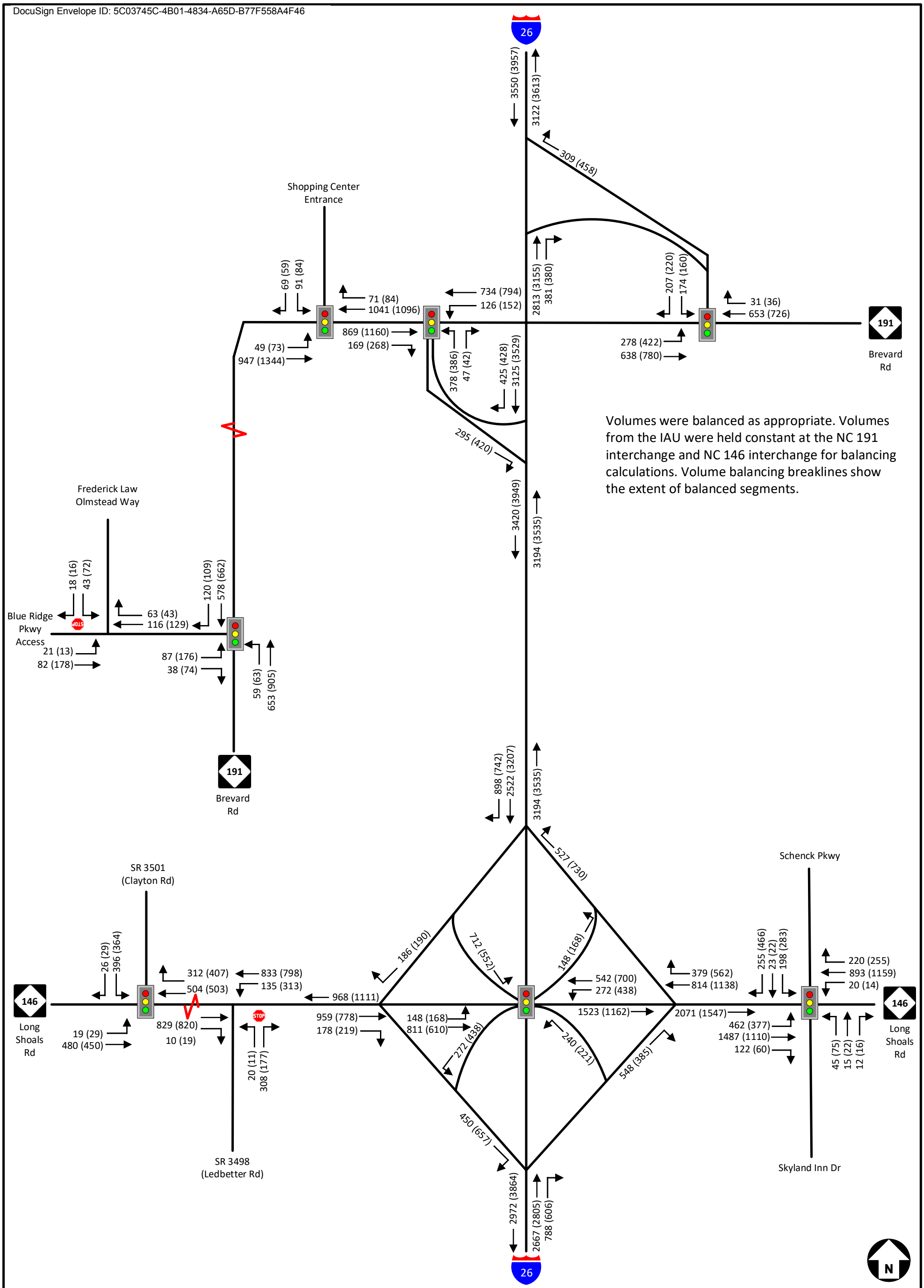

Volumes were balanced as appropriate. Volumes from the IAU were held constant at the NC 191 interchange and NC 146 interchange for balancing calculations. Volume balancing breaklines show the extent of balanced segments.

Figure 6 – 2021 Existing Volumes

SHEET 1 OF 1

L E G E N D

- Volume Balancing Breakline
- Existing Roadway
- Existing Signal
- XX (XX) AM (PM) Volume
- Stop Sign

TIP: HE-0001	**WBS:** 49473
COUNTY: Buncombe	**DIVISION:** 13
DATE: July 2021	
PREPARED BY: Three Oaks Engineering	
LOCATION: I-26/NC 191 Connector	
PROJECT: I-26 Future Interchange at NC 191 Connector (Exit 35)	

DocuSign Envelope ID: 5C03745C-4B01-4834-A65D-B77F558A4F46

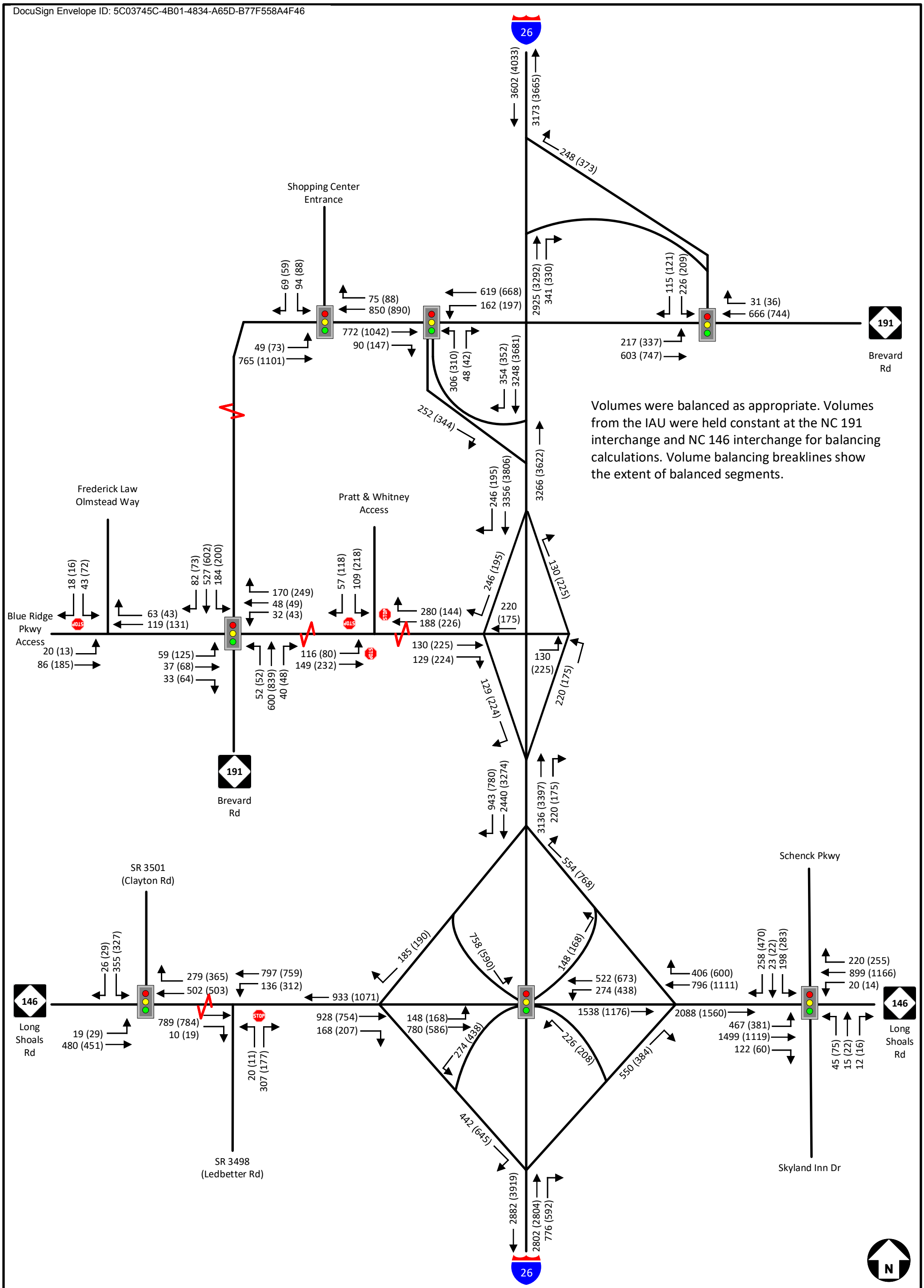

Volumes were balanced as appropriate. Volumes from the IAU were held constant at the NC 191 interchange and NC 146 interchange for balancing calculations. Volume balancing breaklines show the extent of balanced segments.

Figure 7 – 2021 Build Volumes

SHEET 1 OF 1

L E G E N D

- Volume Balancing Breakline
- Existing Roadway
- Existing Signal
- XX (XX) AM (PM) Volume
- Stop Sign

TIP: HE-0001	**WBS:** 49473
COUNTY: Buncombe	**DIVISION:** 13
DATE: July 2021	
PREPARED BY: Three Oaks Engineering	
LOCATION: I-26/NC 191 Connector	
PROJECT: I-26 Future Interchange at NC 191 Connector (Exit 35)	

DocuSign Envelope ID: 5C03745C-4B01-4834-A65D-B77F558A4F46

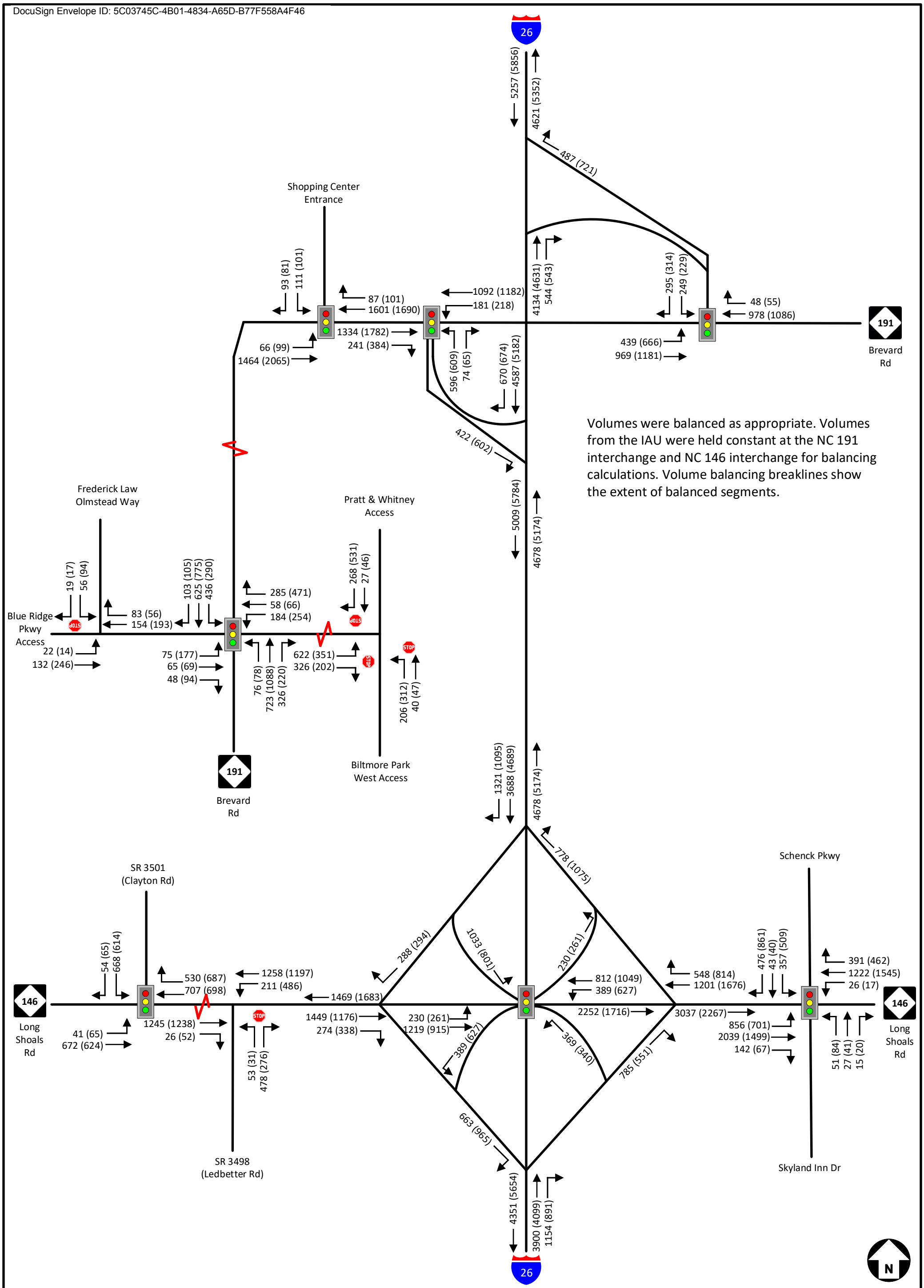

Figure 8 – 2045 No-Build Volumes

SHEET 1 OF 1

L E G E N D

- Volume Balancing Breakline
- Existing Roadway
- Existing Signal
- XX (XX) AM (PM) Volume
- Stop Sign

TIP: HE-0001	**WBS:** 49473
COUNTY: Buncombe	**DIVISION:** 13
DATE: July 2021	
PREPARED BY: Three Oaks Engineering	
LOCATION: I-26/NC 191 Connector	
PROJECT: I-26 Future Interchange at NC 191 Connector (Exit 35)	

DocuSign Envelope ID: 5C03745C-4B01-4834-A65D-B77F558A4F46

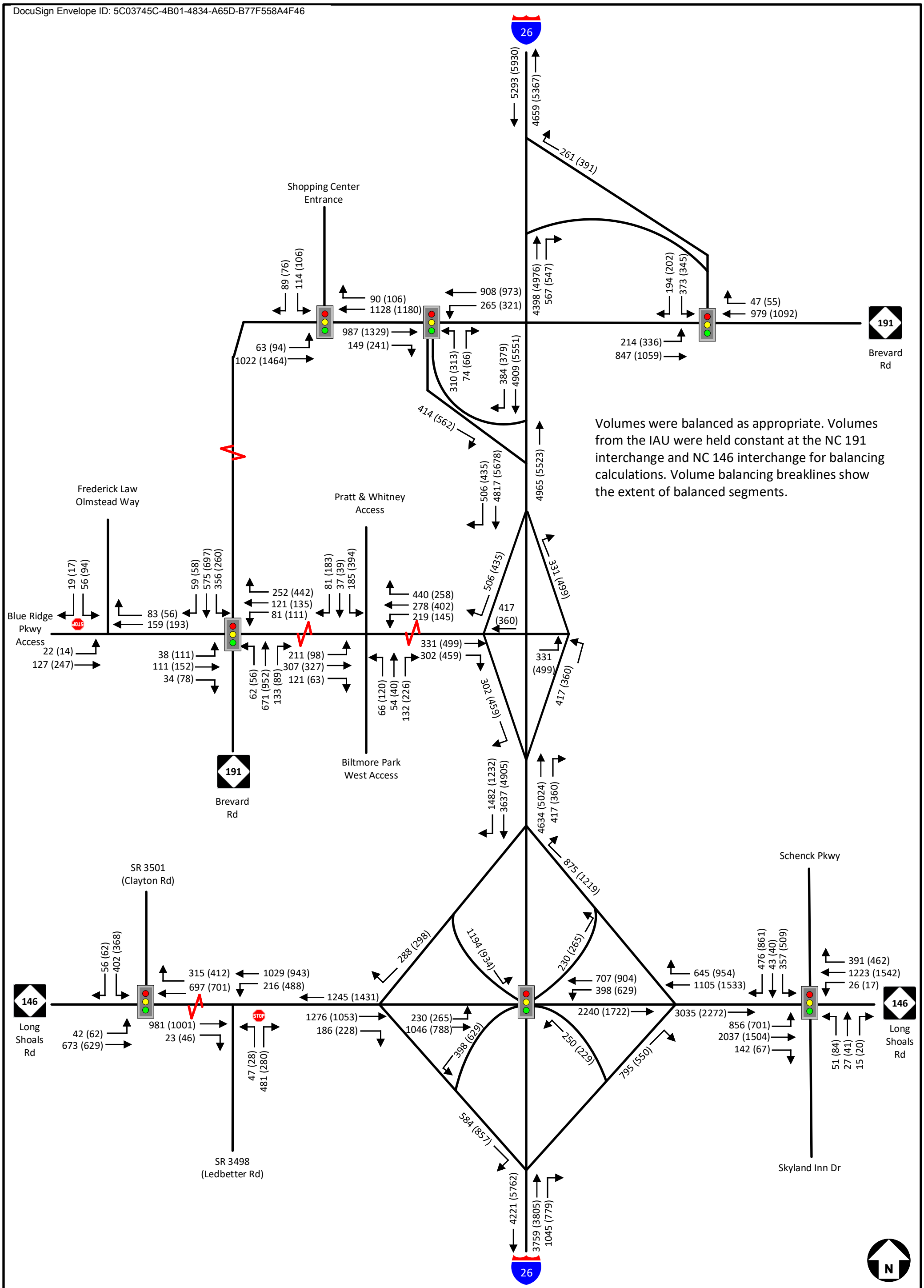

Volumes were balanced as appropriate. Volumes from the IAU were held constant at the NC 191 interchange and NC 146 interchange for balancing calculations. Volume balancing breaklines show the extent of balanced segments.

Figure 9 – 2045 Build Volumes

SHEET 1 OF 1

L E G E N D

- Volume Balancing Breakline
- Existing Roadway
- Existing Signal
- XX (XX) AM (PM) Volume
- Stop Sign

TIP: HE-0001	**WBS:** 49473
COUNTY: Buncombe	**DIVISION:** 13
DATE: July 2021	
PREPARED BY: Three Oaks Engineering	
LOCATION: I-26/NC 191 Connector	
PROJECT: I-26 Future Interchange at NC 191 Connector (Exit 35)	

DocuSign Envelope ID: 5C03745C-4B01-4834-A65D-B77F558A4F46

Appendix B – Meeting Minutes

DocuSign Envelope ID: 5C03745C-4B01-4834-A65D-B77F558A4F46

STATE OF NORTH CAROLINA
DEPARTMENT OF TRANSPORTATION

ROY COOPER
GOVERNOR

J. ERIC BOYETTE
SECRETARY

Meeting Agenda

Date Prepared:	March 26, 2021
Meeting Date/Time/Place:	Teams
Meeting Purpose:	IAR and forecast requirements
Prepared By:	Nathan Phillips

Project Description: Gannett Fleming, Inc has been asked to prepare the design and documentation necessary to receive bids for a new interchange on I-26. The new interchange will be located between the interchanges of I-26 with NC 146 (Long Shoals Road) and Brevard Road. This new interchange will provide access to a new roadway being constructed from the proposed access to NC 191. The project is in support of a proposed development to be located west of I-26 on Biltmore Farms property. Note that no access to the east of I-26 is planned as part of this proposed interchange.

I. Introductions

II. Discussion Items

Intersections and interchanges to be included in the IAR and Forecast

- I-26 interchange with NC 191(Brevard Road) including both ramp terminal intersections
- I-26 interchange with NC 146 (Long Shoals Road) including all three ramp terminal intersections
- Intersection of NC 191 (Brevard Road) and shopping center southwest of interchange (Ingles/Asheville Outlets)
- NC 146 (Long Shoals Road) and Ledbetter Road (unsig.)
- NC 146 (Long Shoals Road) and Clayton Road
- NC 146 (Long Shoals Road) and Schenck Parkway/Skyland Inn Drive
- Ramp terminals for new interchange with I-26 (Exit 35)

Analysis Software

- TransModeler/Freeval, Both

DocuSign Envelope ID: 5C03745C-4B01-4834-A65D-B77F558A4F46

TransModeler Criteria

- Previous calibrated models in the area (or non-calibrated models)
- Calibration/Validation
  - Methodology and parameters
- Version
- Base Year for calibration/validation

Base Year/Future Year

Number of Alternatives

- One representative of a standard entrance/exit design
- One representative of a left entrance/exit design

III. Action Items

To Be Determined

Handouts

- Agenda
- Proposed IAR Intersection Analysis Intersections

T:\AllData\Projects\21-8XX HE-0001 I-26 IAR\Meetings\2021.03.29 IAR Coord

DocuSign Envelope ID: 5C03745C-4B01-4834-A65D-B77F558A4F46

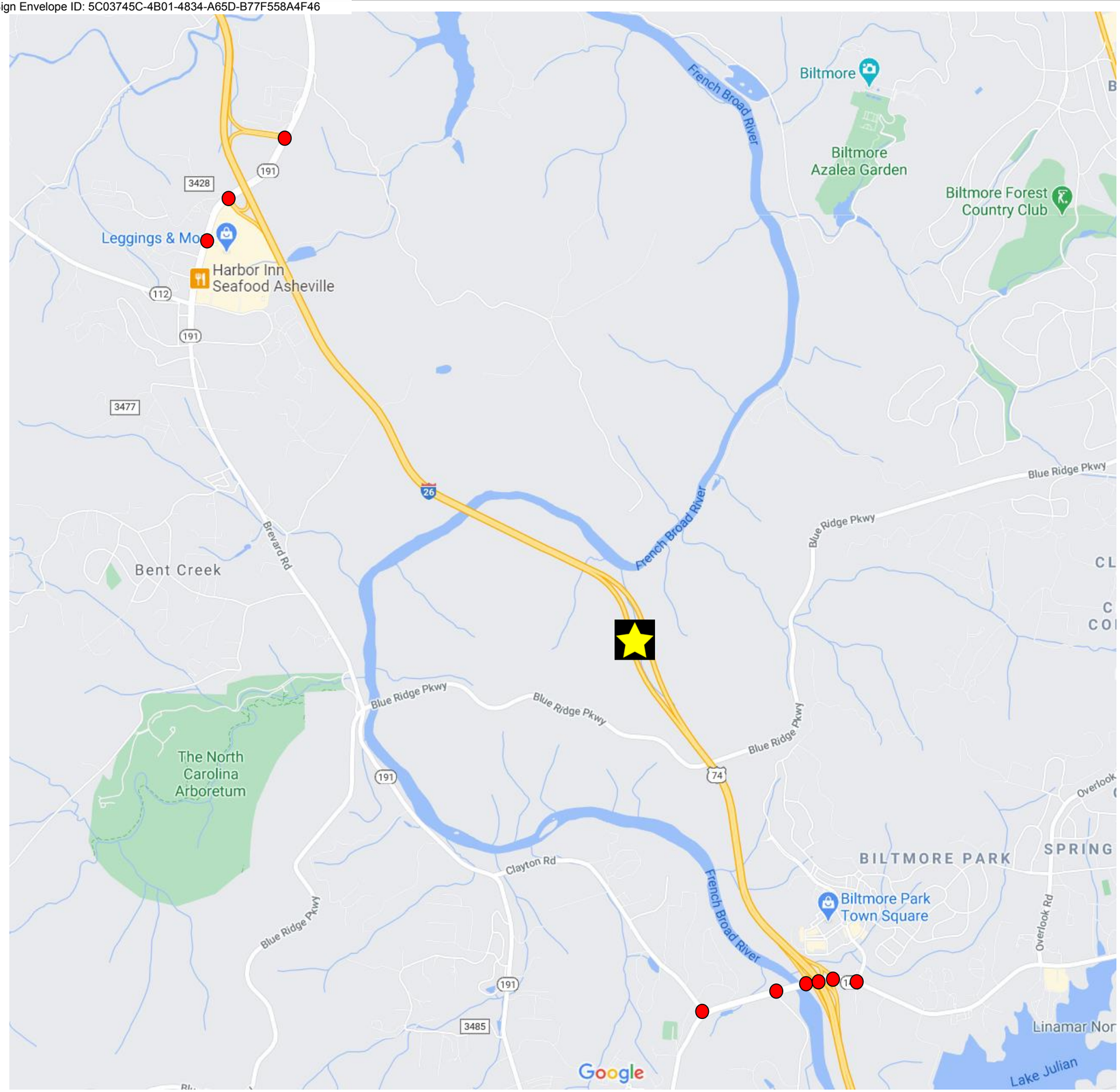

PROPOSED INTERSECTION ANALYSIS LOCATIONS

TIP: HE-0001	**COUNTY:** Buncombe
DATE: March 29, 2021	**DIVISION:** 13
PREPARED BY: Three Oaks Engineering	

PROJECT: New I-26 Interchange to provide access to a new roadway being constructed to access NC 191

LEGEND

- Proposed Intersection Analysis Locations
- Project Location

NOT TO SCALE

N

DocuSign Envelope ID: 5C03745C-4B01-4834-A65D-B77F558A4F46

STATE OF NORTH CAROLINA
DEPARTMENT OF TRANSPORTATION

ROY COOPER
GOVERNOR

ERIC J BOYETTE
SECRETARY

Final Meeting Summary

HE-0001 – Interchange Access Report (IAR) Scoping

Date Prepared:	March 29, 2021
Meeting Date/Time/Place:	March 29, 2021 @ 9:00 AM - Teams Meeting
Meeting Purpose:	Coordination for the I-26 Interchange Access Report
Prepared By:	Mark Freeman – Three Oaks Engineering

Meeting Attendees:

Elise Groundwater – NCDOT	ekgroundwater@ncdot.gov
Keith Dixon – NCDOT	kgdixon@ncdot.gov
Adam Archual – Gannett Fleming	aarchual@GFNET.com
McCray Coates – NCDOT	hmcoates@ncdot.gov
Joe Geigle – FHWA	joseph.geigle@dot.gov
Brendan Merithew – NCDOT	bwmerithew@ncdot.gov
Mike Reese – NCDOT	mikereese@ncdot.gov
Daniel Sellers – NCDOT	dcsellers1@ncdot.gov
Brendan Merithew – NCDOT	bwmerithew@ncdot.gov
Rick Tipton – Gannet Fleming	rtipton@GFNET.com
Nathan Phillips – Three Oaks	nathan.phillips@threeoaksengineering.com
Mark Freeman – Three Oaks	mark.freeman@threeoaksengineering.com
Dan Thomas – Three Oaks	dan.thomas@threeoaksengineering.com
Ross Oliver – Three Oaks	ross.oliver@threeoaksengineering.com
Kim Levine – Three Oaks	kimberely.levine@threeoaksengineering.com

Discussion Summary

IAR Study Area

The IAR will include analysis of the following intersections:

- I-26 interchange with NC 191(Brevard Road) including both ramp terminal intersections (note that the eastern ramp terminal intersection has been relocated as part of I-4700 and the western ramp terminal intersection is now a three-leg intersection)
- NC 191 (Brevard Road) and access road between Hampton Inn and Petco
- I-26 interchange with NC 146 (Long Shoals Road) including all three ramp terminal intersections (note that the eastern ramp access will be signalized and pulled in as part of I-4700 and analyzed as such in the Existing and for the Future Year analysis)

Mailing Address:
NC DEPARTMENT OF TRANSPORTATION
PROJECT DEVELOPMENT UNIT
1598 MAIL SERVICE CENTER
RALEIGH NC 27699-1598

Telephone: (919) 707-6000
Fax: (919) 212-5785
Customer Service: 1-877-368-4968
Website: www.ncdot.gov

Location:
1020 BIRCH RIDGE DRIVE
RALEIGH NC 27610

DocuSign Envelope ID: 5C03745C-4B01-4834-A65D-B77F558A4F46

- NC 146 (Long Shoals Road) and Ledbetter Road (unsignalized)
- NC 146 (Long Shoals Road) and Clayton Road
- NC 146 (Long Shoals Road) and Schenck Parkway/Skyland Inn Drive (note this intersection is being modified as part of I-4700 and that configuration will be analyzed for the Existing and Build conditions)
- Ramp terminals for the proposed interchange with I-26 (Exit 35)
- New connection and internal drive (roundabout)
- New Connection and NC 191 (Brevard Road)/Blue Ridge Parkway Access
- Blue Ridge Parkway Access and Frederick Law Olmsted Way (NC Arboretum Access)

Forecast Study Area
The forecast will include all of the access points listed above as well as any additional signalized intersections on NC 191 (Brevard Road) from I-26 to NC 146 (Long Shoals Road). Note that the IAR study area the NEPA traffic analysis study area are not the same.

Joe brought up potential impacts that teleworking and other “pandemic” travel changes may have on the traffic forecast. Keith and Cooper indicated that there is no way to make these considerations at this time based on the information that is available.

Keith mentioned that no formal traffic forecast request would need to be made.

Analysis Years
The base year of the forecast will be determined by the Transportation Planning Division after they obtain and review counts for the forecast. The future year will be selected by The Transportation Planning Division following their standard procedure.

Model
The IAR will be developed in TransModeler (version to be determined by NCDOT). Since the I-4700 TransModeler model was calibrated, and COVID and construction of I-4700 have made it difficult to obtain reasonable speed and congestion data for calibration testing, the I-4700 model will be appended with no additional calibration steps. Improvements associated with I-4700 will be assumed to be complete and included as background improvements in all scenarios (including Existing Conditions).

Project Alternatives
The following Build Alternatives will be analyzed for the IAR:

- One representative of a standard entrance/exit design
- One representative of a left entrance/exit

Safety Analysis
The IAR will include a safety analysis. The general scope of that analysis is to show that the project will not have a large impact on safety. For a standard interchange configuration (right entrance/exit) only basic data will be needed. For the left entrance/exit configuration, an additional analysis step could be required. The team should consider using the FHWA interchange analysis safety tool. The team will discuss the appropriate approach with Joe Geigle of FHWA for scoping purposes. The basic steps of the analysis are as follows:

- Request crash analysis from NCDOT (this will be requested by Gannett Fleming)
- Review crash analysis to determine if there are high crash locations in the project study area

DocuSign Envelope ID: 5C03745C-4B01-4834-A65D-B77F558A4F46

- Determine if the project contributes to safety concerns and identify crash mitigation measures if needed

Signing Plan
The IAR will include a conceptual signing plan. The purpose of the signing plan is to show that there is adequate spacing available for necessary signing and that the proposed signing is easy to understand.

Action Items

- NCDOT (McCray Coates) will provide plans for I-4700 to Gannett Fleming (Rick Tipton) and Three Oaks (Three Oaks)
- NCDOT (Elise Groundwater) will provide access to I-4700 traffic data through SharePoint to Three Oaks (Nathan Phillips) and Gannett Fleming (Rick Tipton)
- Gannett Fleming will request crash data
- Gannett Fleming will develop signing plan
- NCDOT (Keith Dixon) will prepare the scope for the forecast and circulate to the team
- NCDOT (Keith Dixon) will provide the forecast
- Three Oaks (Nathan Phillips) will develop draft IAR scope and circulate to the team
- Three Oaks will develop the IAR following the approved scope

DocuSign Envelope ID: 5C03745C-4B01-4834-A65D-B77F558A4F46

STATE OF NORTH CAROLINA
DEPARTMENT OF TRANSPORTATION

ROY COOPER
GOVERNOR

J. ERIC BOYETTE
SECRETARY

Meeting Agenda

Date Prepared:	June 17, 2021
Meeting Date/Time/Place:	Teams
Meeting Purpose:	HE-0001 FREEVAL volume development
Prepared By:	Mark Freeman

I. Introductions

II. Discussion Items

Volume Development Calculations
The forecast provides peak hour data. However, I need 15-minute volumes from 6:30 – 9:30 AM and 3:30 – 6:30 PM for FREEVAL. So, I compared count data for each peak 15-minute interval to the calculated peak 15-minute volume from forecast (peak hour with 0.9 PHF applied). Then, I multiplied the count volume by that ratio to calculate each 15-min interval. Separate curves were developed for each segment and for each peak.

Sample calculation for the 6:30 AM period for Segment 1 - I-26 southeast-bound, entering the model area (northwest of the NC 191 interchange):

6:30 AM
Count = **589**
Peak 15-minute volume from count (occurred at 7:30 AM) = **818**

AM peak hour (from forecast) = **3,550**
Peak 15-minute volume that would equate to a PHF of 0.9 = **986**
(The calculation to determine this value is as follows: 3,550 / 4X = 0.9, X=986)

I need the ratio of the peak 15-minute count to the forecast peak hour, adjusted to match a PHF of 0.9. 589/3,550 provides the ratio of the count data to the forecast. Next, I need to adjust to base the factor on 0.9 PHF rather than a single day count. So, I multiplied by the ratio of the value that equates to a peak hour factor of 0.9 from the forecast divided by the counted peak 15 minute period (986/818).

Full equation:
Factor to be applied to 6:30 AM count = (589/3,550) * (986/818) = 0.20000
0.2000 x 3,550 = 710
6:30 AM volume for FREEVAL = 710

DocuSign Envelope ID: 5C03745C-4B01-4834-A65D-B77F558A4F46

This process is applied to each segment for each peak.

FREEVAL comparison to HERE data
While a full validation exercise wasn't requested, I did want to compare the FREEVAL speeds to HERE speeds to see if the model seemed reasonable. There are a number of challenges to this comparison:

- I-26 is currently under construction
- FREEVAL segments don't exactly match HERE segments
- Travel has been affected by COVID

To make a reasonable comparison:

- Used 2018 HERE data with 2021 volumes (the forecast states that 2021 volumes are roughly the same as 2018 pre-COVID data)
- Attempted to match segments as closely as possible

See next page for detailed speed comparison.

Next Tasks (3 Oaks)

- Complete FREEVAL and Synchro analysis (once forecast is approved)
- Submit technical analysis work for interim review

T:\AllData\Projects\21-800 HE-0001 I-26 IAR\Meetings\2021.06.22 FREEVAL input review

DocuSign Envelope ID: 5C03745C-4B01-4834-A65D-B77F558A4F46

Comparison of FREEVAL speed to HERE speed on I-26:

AM Peak										
6:30	-1			0			-5			-2
6:45	-1			0			-6			-2
7:00	-1			-1			-6			-2
7:15	-1			-1			-6			-3
7:30	-1			-1			-4			-3
7:45	-1			2			0			-2
8:00	2			6			1			3
8:15	2			6			0			4
8:30	1			5			-1			2
8:45	1			4			-2			2
9:00	1			2			-4			0
9:15	1			1			-4			0
HERE Segment	10	9		8			7			6
FREEVAL Segment	9	8	7	6	5		4	3	2	1
			NC 191		WB			NC 146		
					EB					
FREEVAL Segment	1	2	3	4	5		6	7	8	9
HERE Segment	1		2		3			4		5
6:30	0		-1		0			-3		0
6:45	1		-1		1			-3		0
7:00	2		-1		0			-3		0
7:15	-3		-3		-7			-3		-3
7:30	-3		-1		-10			-4		-8
7:45	2		6		-8			-1		-4
8:00	3		5		-3			0		-2
8:15	3		3		-1			-1		-2
8:30	3		3		-1			-1		-2
8:45	2		2		-2			-1		-2
9:00	4		2		1			-1		-1
9:15	4		2		2			-1		0

PM Peak										
3:30	0		-9		0			-16		3
3:45	0		-11		5			-18		-13
4:00	1		-11		-1			-18		-16
4:15	1		-11		-7			-7		-15
4:30	1		-8		-4			-15		-9
4:45	1		-8		-3			-6		-13
5:00	1		-9		-7			-13		-11
5:15	1		-8		-8			-12		-10
5:30	2		-9		-6			-11		-8
5:45	1		-10		-7			-19		-13
6:00	0		-14		-10			-19		1
6:15	-2		-16		-2			2		5
HERE Segment	10		9		8			7		6
FREEVAL Segment	9	8	7	6	5		4	3	2	1
			NC 191		WB			NC 146		
					EB					
FREEVAL Segment	1	2	3	4	5		6	7	8	9
HERE Segment	1		2		3			4		5
3:30	13		12		2			4		2
3:45	4		8		-5			0		-2
4:00	6		9		-2			2		-1
4:15	5		9		-2			3		2
4:30	10		12		2			7		6
4:45	11		13		3			6		2
5:00	8		11		0			4		-2
5:15	-4		2		5			-1		4
5:30	-5		3		7			-1		4
5:45	1		2		5			11		6
6:00	2		11		9			10		8
6:15	11		11		10			9		10

Three Oaks Engineering

Tel 919.423.9413
www.threeoaksengineering.com

324 Blackwell Street, Suite 1140
Durham, NC 27701

DocuSign Envelope ID: 5C03745C-4B01-4834-A65D-B77F558A4F46

STATE OF NORTH CAROLINA
DEPARTMENT OF TRANSPORTATION

ROY COOPER
GOVERNOR

ERIC J BOYETTE
SECRETARY

Meeting Summary

HE-0001 – Interchange Access Report (IAR) Scoping

Date Prepared:	June 22, 2021
Meeting Date/Time/Place:	June 22, 2021 @ 9:30 AM - Teams Meeting
Meeting Purpose:	Coordination for the I-26 Interchange Access Report – Volume and FREEVAL Development
Prepared By:	Mark Freeman – Three Oaks Engineering

Meeting Attendees:

Elise Groundwater – NCDOT	ekgroundwater@ncdot.gov
Mike Reese – NCDOT	mikereese@ncdot.gov
Joe Geigle – FHWA	joseph.geigle@dot.gov
Adam Archual – Gannett Fleming	aarchual@GFNET.com
Scott Holcomb – Gannett Fleming	sholcomb@GFNET.com
Rick Tipton – Gannet Fleming	rtipton@GFNET.com
Nathan Phillips – Three Oaks	nathan.phillips@threeoaksengineering.com
Mark Freeman – Three Oaks	mark.freeman@threeoaksengineering.com
Ross Oliver – Three Oaks	ross.oliver@threeoaksengineering.com
Megha Rao – Three Oaks	megha.rao@threeoaksengineering.com

Discussion Summary

The following provides a summary of the items discussed:

Volume Development Process

Mark Freeman described the volume development process (also described in the meeting agenda, attached). The group was generally in agreement with the way the FREEVAL 15-minute volume curves were developed. Joe Geigle suggested that the main section of the report contain a summary statement of the process and not attempt to detail the calculations. It was agreed that the detailed discussion, along with a calculation example, would be included in the appendix.

Comparison of FREEVAL Speeds to HERE Data

At the time of this study, North Carolina was likely in the recovery stage of the COVID pandemic. Changes to work habits and in-person school attendance resulting from the virus had caused a

Mailing Address:
NC DEPARTMENT OF TRANSPORTATION
PROJECT DEVELOPMENT UNIT
1598 MAIL SERVICE CENTER
RALEIGH NC 27699-1598

Telephone: (919) 707-6000
Fax: (919) 212-5785
Customer Service: 1-877-368-4968
Website: www.ncdot.gov

Location:
1020 BIRCH RIDGE DRIVE
RALEIGH NC 27610

DocuSign Envelope ID: 5C03745C-4B01-4834-A65D-B77F558A4F46

drop in total travel and affected the time periods in which travel occurred. Further, the I-4400/I-4700 project was under construction. As such, there was no way to obtain data suitable for calibration of the FREEVAL model. So, to test the validity of the model, a FREEVAL analysis was developed to represent the conditions in 2018 (4-lane freeway). The FREEVAL-calculated speeds were then compared to the 2018 average speeds from HERE data. Mark displayed an exhibit (attached to this memo) that shows that the speeds matched rather well for the peak directions, while values did not match as well in the non-peak directions.

LOS E

Mark noted that the Future Year Build analysis has a level of serve of E for the basic freeway section between NC 191 and the new interchange as well as the basic freeway section south of NC 146 in the 4:30 – 4:45 time period. Joe noted that the I-440/I-4700 project (the improvements to I-26 through the same study area)was previously evaluated for 2040 and provided LOS D operations. He also asked that the scenario where LOS E was reported in 2045 be evaluated for 2040 conditions so that a comparison could be made between the two projects.

Additional Items

Mike Reese and Joe comment that there was not good information to evaluate safety for a left-hand exit. Mike Reese noted that there was a rest area constructed on I-77 north of US 21 (Turnersburg Highway, Exit 54) north of I-40 with left entrance and exit configurations. Mike suggested that we obtain a comparison of TEAAS data (crash data) for the before and after construction conditions around that project. The purpose of this data is to show a North Carolina-specific example of left entrance/exit conditions. Joe agreed that this was a good idea and recommend it be included in the IAR.

Action Items

- Three Oaks will request a crash comparison for the I-77 rest area north of I-40.
- Three Oaks will develop a 2040 Build FREEVAL analysis for the eastbound direction in the PM peak.
- For the IAR, Three Oaks will provide details regarding the volume development process in an appendix, and provide a summary statement in the body of the report.

DocuSign Envelope ID: 5C03745C-4B01-4834-A65D-B77F558A4F46

Appendix C – Travel Demand Forecast

DocuSign Envelope ID: 5C03745C-4B01-4834-A65D-B77F558A4F46

TRAFFIC FORECAST COVER LETTER

June 29, 2021

MEMORANDUM TO: H. McCray Coates
NCDOT Division 13 Project Manager

FROM: Peter Trencansky, PE, PTOE, AICP
Patriot Transportation Engineering, PLLC

SUBJECT: Traffic Forecast for HE-0001
Buncombe County
I-26, Proposed New Interchange (Exit 35) at NC 191 Connector

This forecast has been reviewed and approved by the NCDOT Transportation Planning Division on June 29, 2021.

Please find attached the 2021 and 2045 traffic forecast for STIP Project HE-0001 in Buncombe County Counties. The proposed project, HE-0001, would provide direct access to I-26 and a connection to the roadway under construction from NC 191 to the future site of the Pratt & Whitney manufacturing facility. This traffic forecast for this project was requested by NCDOT Division 14 in support of project development activities, including environmental documentation and design for the project.

The project is located within the boundaries of the French Broad River Metropolitan Planning Organization (FBRMPO). The following five scenarios are provided in this forecast:

- 2021 Base Year (Existing Conditions)
- 2021 Base Year Build Alternative
- 2045 Future Year No-Build
- 2045 Future Year No-Build (reduced development)
- 2045 Future Year Build Alternative

Fiscal Constraint

The project is located within the FBRMPO boundaries; therefore, the travel demand model and traffic forecast are fiscally constrained to match the assumptions of the corresponding Metropolitan Transportation Plan (MTP).

The study project is currently not included in the *French Broad River MPO Metropolitan Transportation Plan 2045* (adopted on September 24, 2020); however, an amendment of MTP is currently underway.

The 2045 MTP includes the following projects in the area which are anticipated to affect travel patterns on the subject project and are described as follows:

- HS4502 (I-4700) – I-26 Widening from NC 280 to I-40
- HR4514 (I-4400) – I-26 Widening from US 25 to NC 280
- HS4506 (I-2513C) – I-26/I-40/I-240 interchange improvement
- HR4501 (I-2513A) – I-26/I-240 Widening from I-40 to Haywood Rd

Patriot Transportation Engineering, PLLC
3008 Anderson Drive, Suite 220
Raleigh, North Carolina 27609
Phone: 919.977.9125

DocuSign Envelope ID: 5C03745C-4B01-4834-A65D-B77F558A4F46

- HR4505 (I-2513B) – I-26 Connector from Haywood Rd to Broadway
- HR4507 (U-3403B) – NC 191 Widening from Ledbetter Rd to North of Blue Ridge Parkway
- HR4515 (U-3403A) – NC 191 Widening from NC 146 to NC 280
- HD134510 (U-6047) - NC 112 (Sand Hill/Sardis) Widening from NC 191 to US 19/23
- HR4509 (U-2801A) – US 25A (Sweeten Creek Rd) Widening from Rock Hill Road to US 25 (Hendersonville Rd)
- HD134517 – US 25 (Hendersonville Rd) from I-40 to Blue Ridge Parkway – Access Management
- HR4516 – US 25 (Hendersonville Rd) from Blue Ridge Parkway to NC 146 (Long Shoals Rd) – Access Management
- HR4517 – US 25 (Hendersonville Rd) from NC 146 (Long Shoals Rd) to NC 280 (Airport Rd) – Access Management
- HS4510 (I-6054C) – I-40 Widening from SR 1200 (Wiggins Rd) to SR 1224 Monte Vista Rd

Travel Demand Model

The French Broad River MPO Travel Demand Model (2015/2045 FBRMPO TDM v1.1, issued 4/28/21), developed in TransCAD version 8 Build 22360 (provided by NCDOT), was utilized as a tool in the development of the forecast.

Forecast Methodology

The 2021 Base Year No-Build traffic volumes and design factors were developed based upon current counts, historic counts and historic AADT trend projections. The 2045 future year no-build traffic volumes generally included the development of compound annual growth rates between two model years. The build alternative volumes generally included the development of diversion rates between like model years with different scenarios. The compound annual growth rates or diversion rates were then applied to the AADT volumes from another scenario to develop initial volumes for each scenario. Engineering judgment adjustments were applied as needed in finalizing the volumes in order to develop a balanced forecast.

Interpolation/Extrapolation

To estimate AADT volumes between 2021 and 2045, straight line interpolation between the 2021 and the 2045 scenarios is acceptable. AADT volumes may be extrapolated for up to two years immediately following 2045. If it is determined that any of these assumptions have become inconsistent with the project and surrounding area activity, please request updated projections at this location.

COVID-19 Pandemic Considerations

Until the effects of COVID-19 on travel patterns and traffic volumes are known, a methodology to project future traffic volumes is needed to allow for the planning and design of projects. At this point the most reasonable approach is to determine the current traffic volumes in the study area and compare them against Pre-COVID data sets. As an additional point of comparison in developing current traffic volumes during the pandemic, the volumes will be normalized to pre-COVID volumes based on a comparison of volume data collected from StreetLight Data, Inc. The normalized volumes provide another measure to compare against when utilizing engineering judgment in the traffic forecasting process. The normalized volumes will essentially equate the current volumes back to pre-pandemic volume based on a comparison of current and pre-COVID traffic volumes.

Patriot Transportation Engineering, PLLC
3008 Anderson Drive, Suite 220
Raleigh, North Carolina 27609
Phone: 919.977.9125

DocuSign Envelope ID: 5C03745C-4B01-4834-A65D-B77F558A4F46

The effect of this methodology will essentially freeze volumes at their pre-pandemic volume from early-2020 through the end of 2021 (or roughly a 2-year period). The forecast will then project growth based on the currently adopted local plans and travel demand model between 2022 and 2045.

cc: Steve Cannon, Division 13, Division Project Development Engineer (slcannon@ncdot.gov)
NCDOT Traffic Forecast Engineer (trafficforecast@ncdot.gov)
Daniel Sellers, NCDOT Transportation Planning Unit MPO Contact (dcsellers1@ncdot.gov)

Patriot Transportation Engineering, PLLC
3008 Anderson Drive, Suite 220
Raleigh, North Carolina 27609
Phone: 919.977.9125

DocuSign Envelope ID: 5C03745C-4B01-4834-A65D-B77F558A4F46

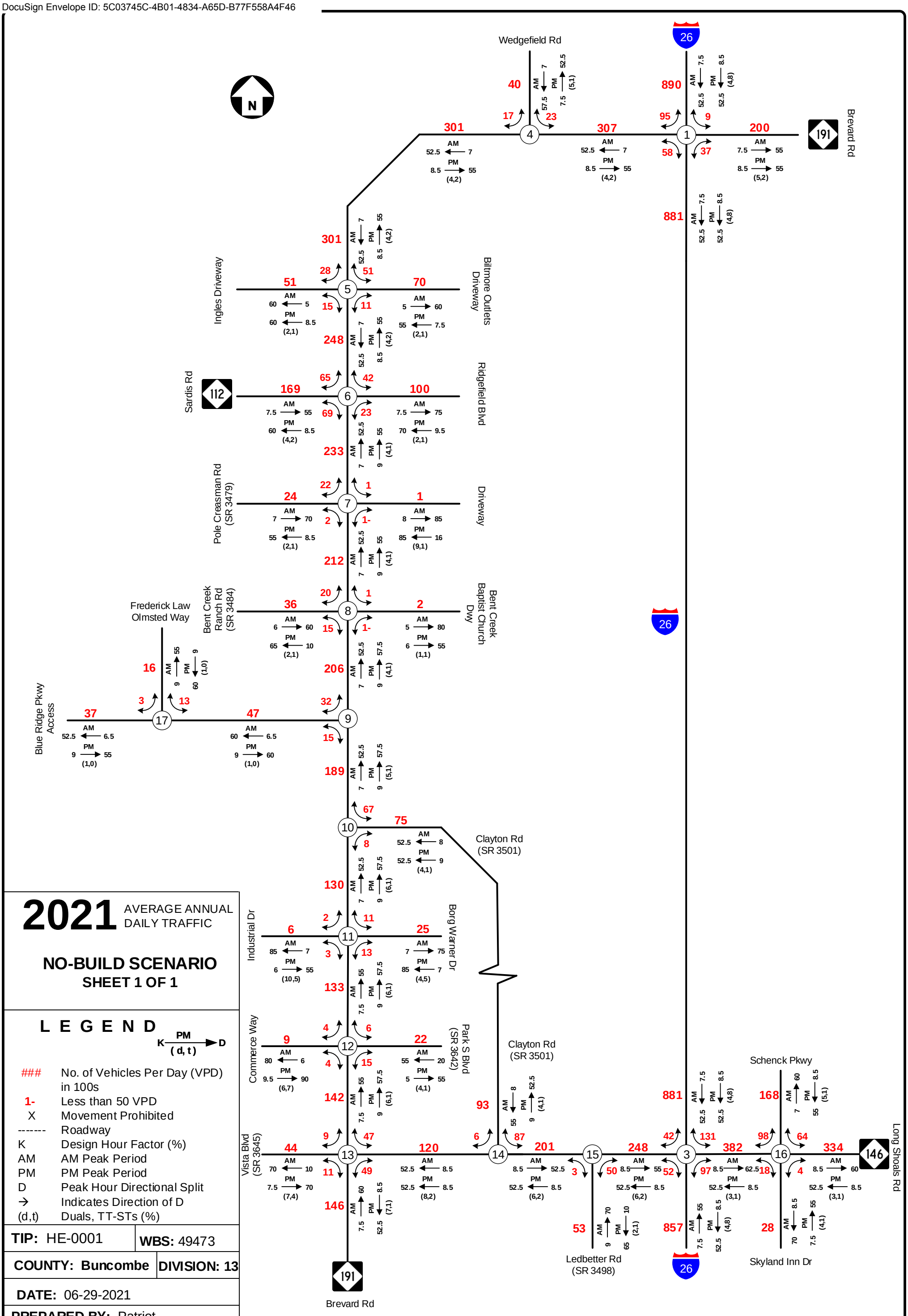

2021 AVERAGE ANNUAL DAILY TRAFFIC

NO-BUILD SCENARIO

SHEET 1 OF 1

L E G E N D

K PM→ D (d, t)

###	No. of Vehicles Per Day (VPD) in 100s
1-	Less than 50 VPD
X	Movement Prohibited
-------	Roadway
K	Design Hour Factor (%)
AM	AM Peak Period
PM	PM Peak Period
D	Peak Hour Directional Split
→	Indicates Direction of D
(d,t)	Duals, TT-STs (%)

TIP: HE-0001 **WBS:** 49473

COUNTY: Buncombe **DIVISION:** 13

DATE: 06-29-2021

PREPARED BY: Patriot Transportation Engineering, PLLC

LOCATION: I-26/NC 191 Connector

PROJECT: I-26 Future Interchange at NC 191 Connector (Exit 35)

Note: Based on a review of the count data and coordination with the Congestion Management Section the peak hour truck percentages for the peak periods are very similar to the daily percentages; therefore, the unadjusted truck percentages included in this forecast should be used for the traffic analysis.

DocuSign Envelope ID: 5C03745C-4B01-4834-A65D-B77F558A4F46

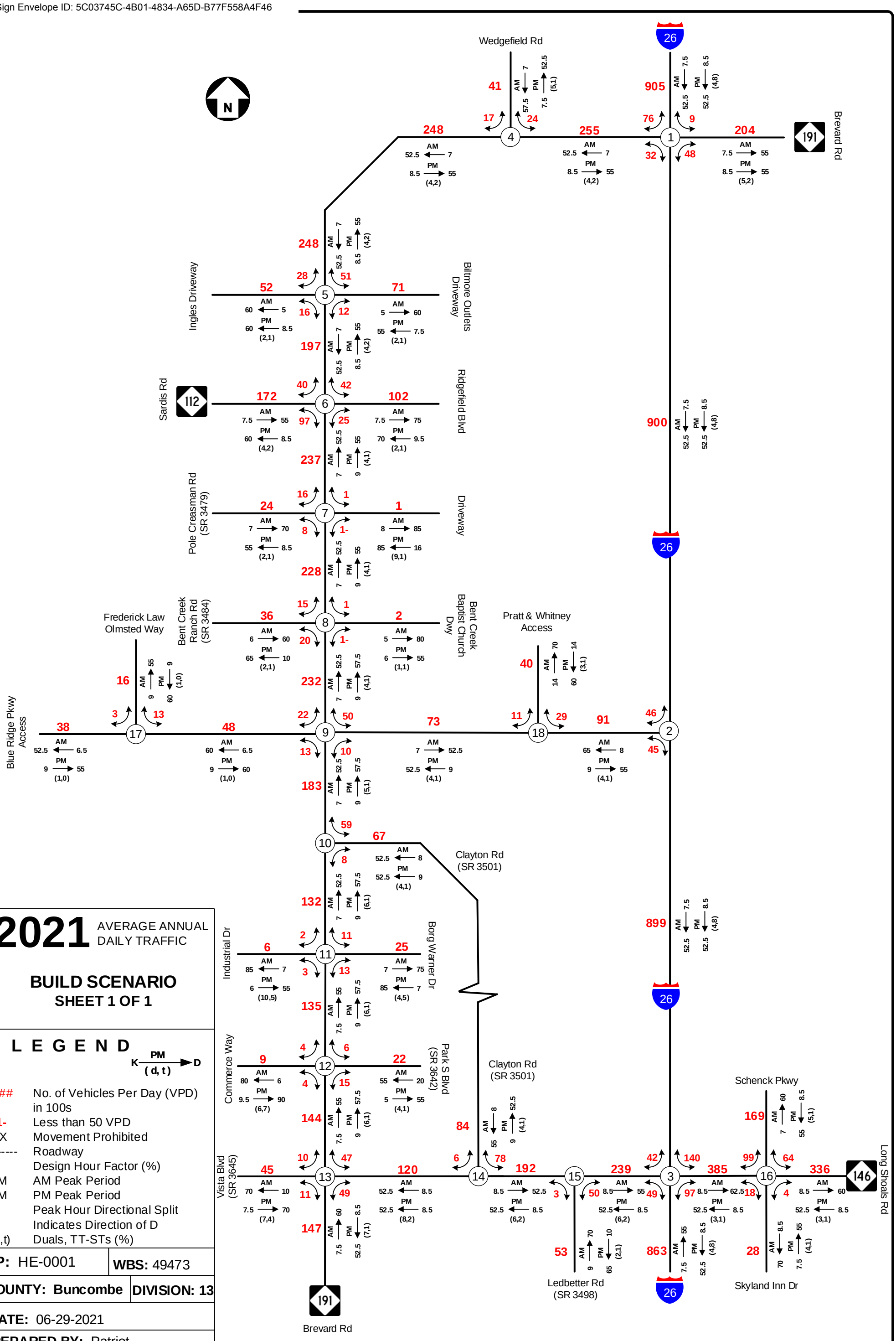

2021 AVERAGE ANNUAL DAILY TRAFFIC

BUILD SCENARIO
SHEET 1 OF 1

L E G E N D

K PM (d, t) D

###	No. of Vehicles Per Day (VPD) in 100s
1-	Less than 50 VPD
X	Movement Prohibited
-------	Roadway
K	Design Hour Factor (%)
AM	AM Peak Period
PM	PM Peak Period
D	Peak Hour Directional Split
→	Indicates Direction of D
(d,t)	Duals, TT-STs (%)

TIP: HE-0001 **WBS:** 49473

COUNTY: Buncombe **DIVISION:** 13

DATE: 06-29-2021

PREPARED BY: Patriot Transportation Engineering, PLLC

LOCATION: I-26/NC 191 Connector

PROJECT: I-26 Future Interchange at NC 191 Connector (Exit 35)

Note: Based on a review of the count data and coordination with the Congestion Management Section the peak hour truck percentages for the peak periods are very similar to the daily percentages; therefore, the unadjusted truck percentages included in this forecast should be used for the traffic analysis.

DocuSign Envelope ID: 5C03745C-4B01-4834-A65D-B77F558A4F46

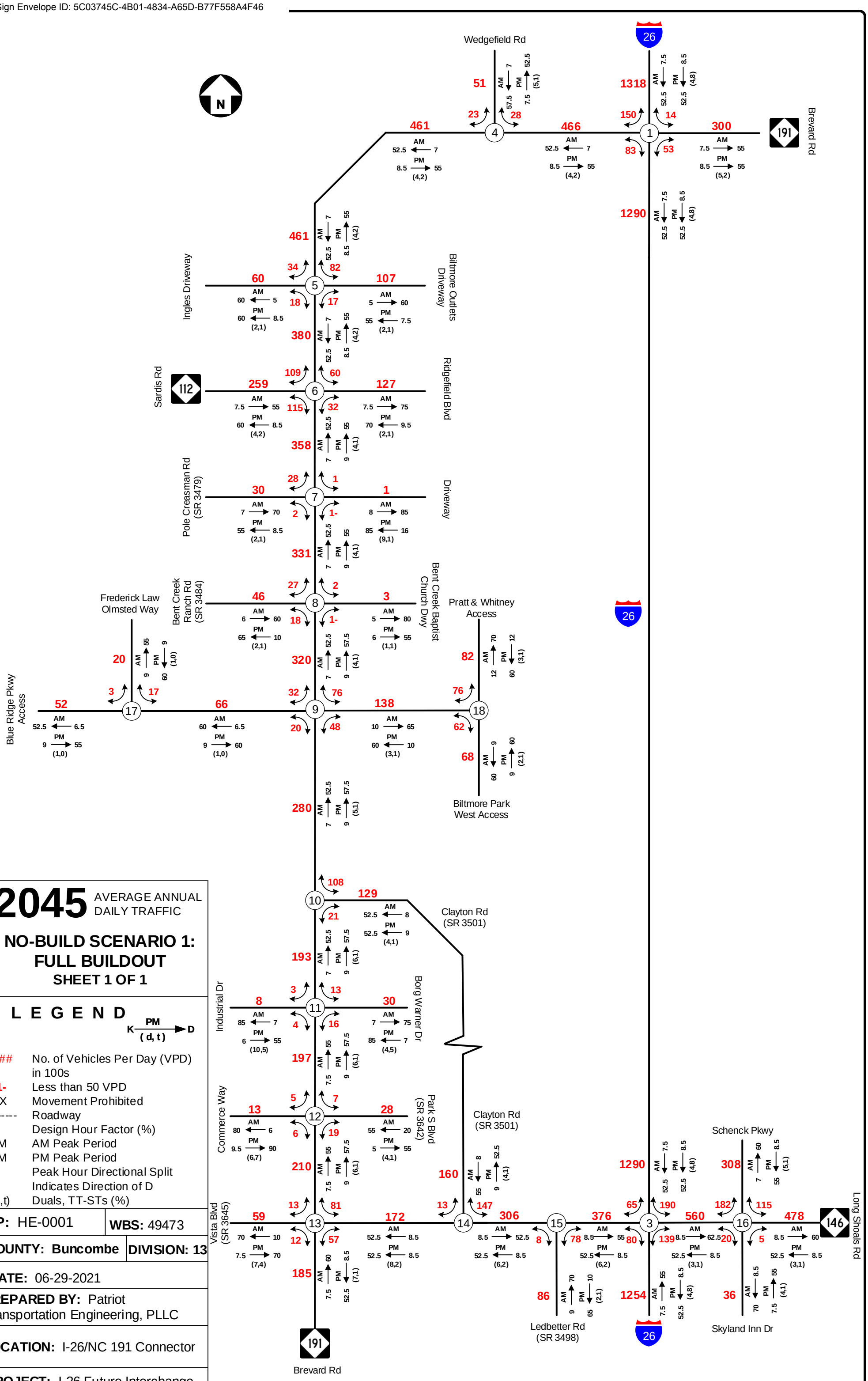

2045 AVERAGE ANNUAL DAILY TRAFFIC

NO-BUILD SCENARIO 1: FULL BUILDOUT

SHEET 1 OF 1

L E G E N D

K PM (d, t) D

###	No. of Vehicles Per Day (VPD) in 100s
1-	Less than 50 VPD
X	Movement Prohibited
-------	Roadway
K	Design Hour Factor (%)
AM	AM Peak Period
PM	PM Peak Period
D	Peak Hour Directional Split
→	Indicates Direction of D
(d,t)	Duals, TT-STs (%)

TIP: HE-0001 **WBS:** 49473

COUNTY: Buncombe **DIVISION:** 13

DATE: 06-29-2021

PREPARED BY: Patriot Transportation Engineering, PLLC

LOCATION: I-26/NC 191 Connector

PROJECT: I-26 Future Interchange at NC 191 Connector (Exit 35)

Note: Based on a review of the count data and coordination with the Congestion Management Section the peak hour truck percentages for the peak periods are very similar to the daily percentages; therefore, the unadjusted truck percentages included in this forecast should be used for the traffic analysis.

DocuSign Envelope ID: 5C03745C-4B01-4834-A65D-B77F558A4F46

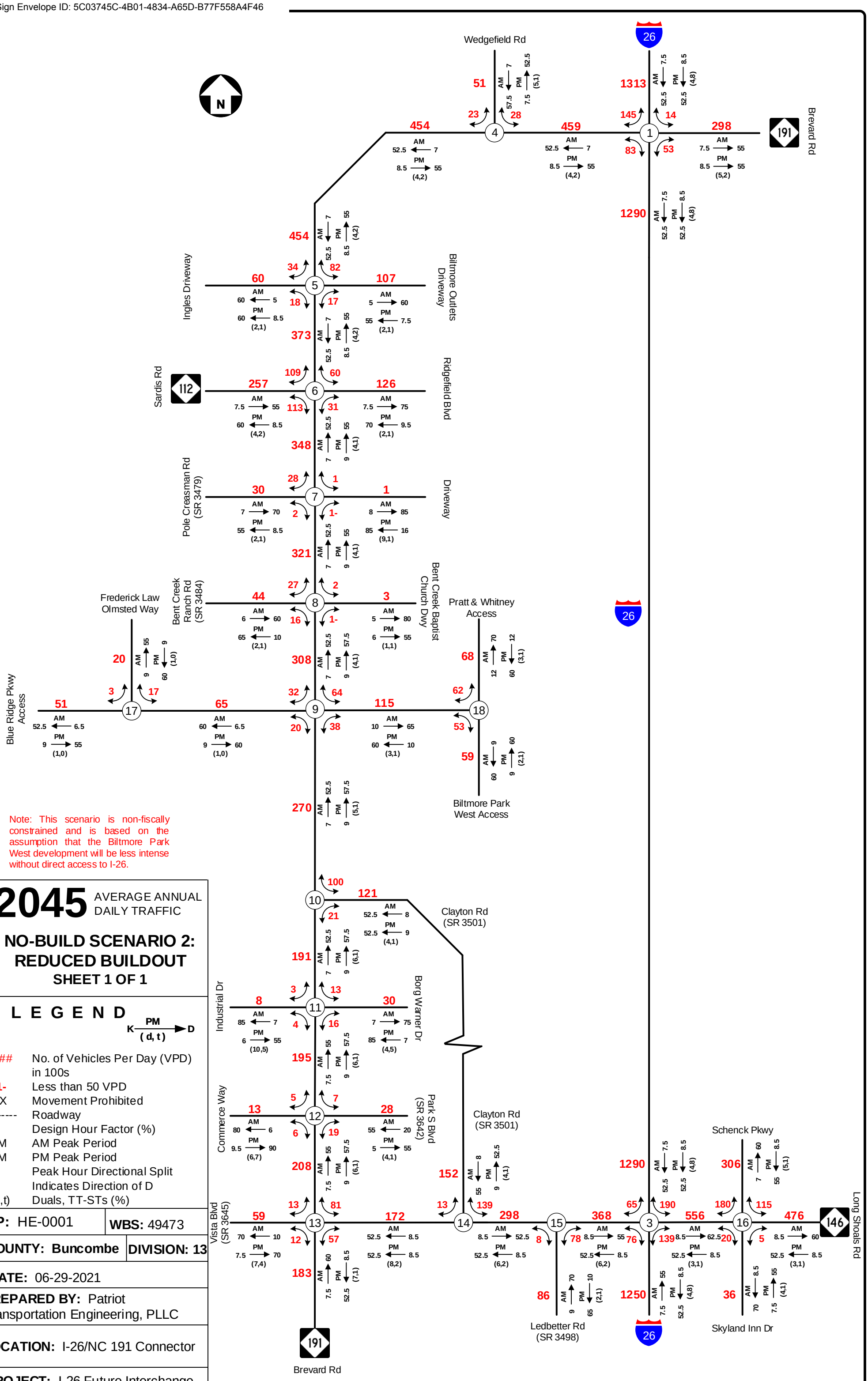

2045 AVERAGE ANNUAL DAILY TRAFFIC

NO-BUILD SCENARIO 2: REDUCED BUILDOUT

SHEET 1 OF 1

L E G E N D

K PM (d, t) D

###	No. of Vehicles Per Day (VPD) in 100s
1-	Less than 50 VPD
X	Movement Prohibited
-------	Roadway
K	Design Hour Factor (%)
AM	AM Peak Period
PM	PM Peak Period
D	Peak Hour Directional Split
→	Indicates Direction of D
(d,t)	Duals, TT-STs (%)

TIP: HE-0001 **WBS:** 49473

COUNTY: Buncombe **DIVISION:** 13

DATE: 06-29-2021

PREPARED BY: Patriot Transportation Engineering, PLLC

LOCATION: I-26/NC 191 Connector

PROJECT: I-26 Future Interchange at NC 191 Connector (Exit 35)

Note: Based on a review of the count data and coordination with the Congestion Management Section the peak hour truck percentages for the peak periods are very similar to the daily percentages; therefore, the unadjusted truck percentages included in this forecast should be used for the traffic analysis.

DocuSign Envelope ID: 5C03745C-4B01-4834-A65D-B77F558A4F46

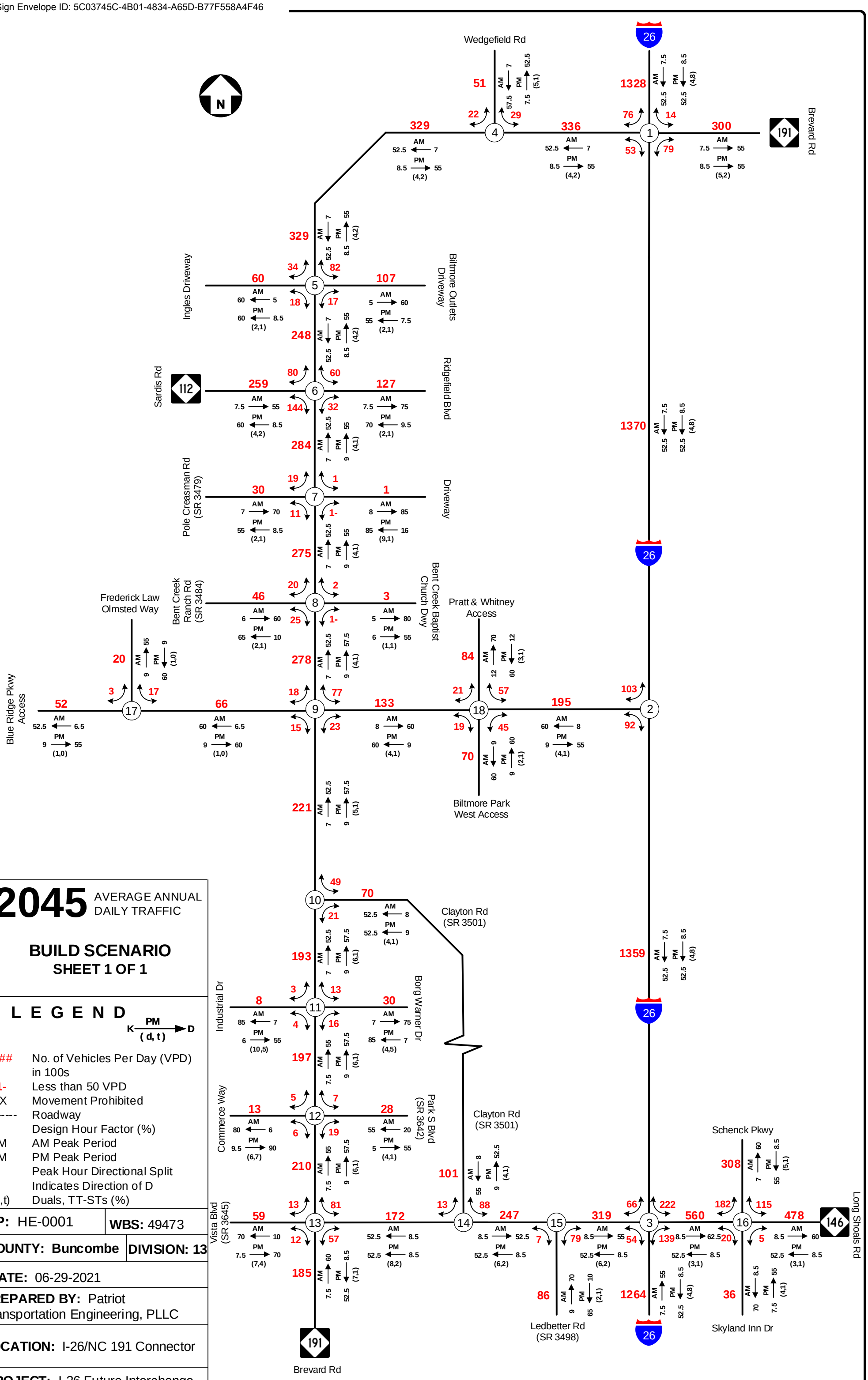

2045 AVERAGE ANNUAL DAILY TRAFFIC

BUILD SCENARIO
SHEET 1 OF 1

L E G E N D

K PM (d, t) D

###	No. of Vehicles Per Day (VPD) in 100s
1-	Less than 50 VPD
X	Movement Prohibited
-------	Roadway
K	Design Hour Factor (%)
AM	AM Peak Period
PM	PM Peak Period
D	Peak Hour Directional Split
→	Indicates Direction of D
(d,t)	Duals, TT-STs (%)

TIP: HE-0001 | **WBS:** 49473

COUNTY: Buncombe | **DIVISION:** 13

DATE: 06-29-2021

PREPARED BY: Patriot Transportation Engineering, PLLC

LOCATION: I-26/NC 191 Connector

PROJECT: I-26 Future Interchange at NC 191 Connector (Exit 35)

Note: Based on a review of the count data and coordination with the Congestion Management Section the peak hour truck percentages for the peak periods are very similar to the daily percentages; therefore, the unadjusted truck percentages included in this forecast should be used for the traffic analysis.

DocuSign Envelope ID: 5C03745C-4B01-4834-A65D-B77F558A4F46

Appendix D – Traffic Count Data

DocuSign Envelope ID: 5C03745C-4B01-4834-A65D-B77F558A4F46

QUALITY COUNTS LLC
920 Blairhill Rd, Suite 106, Charlotte, NC 28217
704.215.4616

Count Number: 15411701
County: Buncombe
City: Asheville
Division: 13

Location: Brevard Rd & I-26 WB Ramps
General Location Type: Intersection
Count Type: Turning Movement (Classification)
Count Start Date: 4/20/2021
Time: 6:00 AM – 7:00 PM
Volume: 22,434

Maximum Temperature: 69° F
Minimum Temperature: 40° F
Precipitation: 0.00 in
Snowfall: 0.0 in
Average Sky Cover: 0.2
Weather Conditions: Clear

1. **School in Session:** Yes
2. **Pedestrians Counted**: Yes
3. **Disabled Pedestrians Present**: No
   Description and Approaches Used: N/A
4. **Counted By**: Annik Ciucio
5. **Data Processor**: Jon B
6. **Signal Inventory**: N/A
7. **Data Collection Method**: Video/Count Board
8. **Equipment Operating Properly**: Yes
9. **Area Lighting Present**: Yes
10. **Nearest Roadway Stop Sign < 300 ft:** No
    If yes, list approaches: N/A
11. **Nearest Traffic Signal < 300 ft:** No
    If yes, list approaches: N/A
12. **At-Grade Railroad Crossing Present (<200 ft):** No
    If yes, list approaches & distance: N/A
13. **Other:**

↑ North

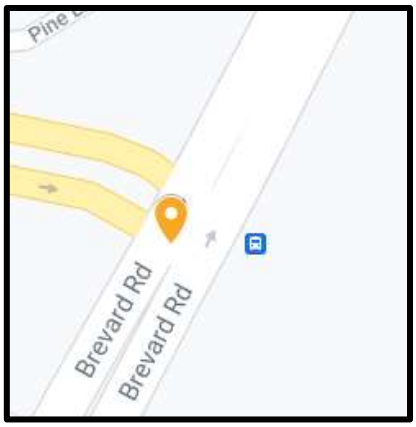

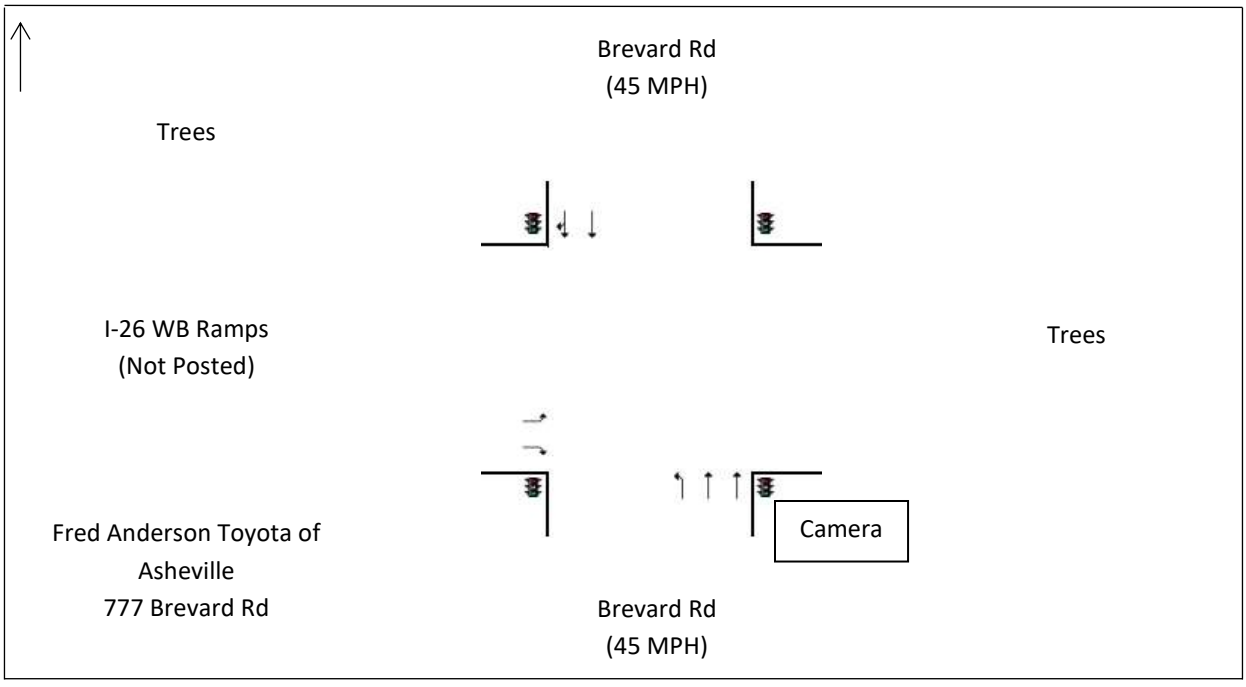

DocuSign Envelope ID: 5C03745C-4B01-4834-A65D-B77F558A4F46

Quality Counts

920 Blairhill Rd, Ste B-106
Charlotte, NC 28217

File Name : 15411701 - Brevard Rd -- I-26 WB Ramps
Site Code : 15411701
Start Date : 4/20/2021
Page No : 1

Groups Printed- Classes 1, 2, 3 - Classes 4, 5, 6, 7 - Classes 8, 9, 10 - Classes 11, 12, 13

	Brevard Rd Southbound					Westbound					Brevard Rd Northbound					I-26 WB Ramps Eastbound					
Start Time	Left	Thru	Right	U-Turn	App. Total	Left	Thru	Right	U-Turn	App. Total	Left	Thru	Right	U-Turn	App. Total	Left	Thru	Right	U-Turn	App. Total	Int. Total
06:00 AM	0	30	1	0	31	0	0	0	0	0	10	39	0	1	50	8	0	16	0	24	105
06:15 AM	0	41	0	0	41	0	0	0	0	0	16	39	0	0	55	8	0	29	0	37	133
06:30 AM	0	61	4	0	65	0	0	0	0	0	17	72	0	2	91	21	0	37	0	58	214
06:45 AM	0	89	8	0	97	0	0	0	0	0	25	60	0	3	88	30	0	43	0	73	258
Total	0	221	13	0	234	0	0	0	0	0	68	210	0	6	284	67	0	125	0	192	710
07:00 AM	0	89	5	0	94	0	0	0	0	0	34	122	0	5	161	36	0	32	0	68	323
07:15 AM	0	119	2	0	121	0	0	0	0	0	49	130	0	3	182	49	0	38	0	87	390
07:30 AM	0	146	14	0	160	0	0	0	0	0	49	149	0	1	199	58	0	39	0	97	456
07:45 AM	0	178	8	0	186	0	0	0	0	0	57	154	0	4	215	51	0	59	0	110	511
Total	0	532	29	0	561	0	0	0	0	0	189	555	0	13	757	194	0	168	0	362	1680
08:00 AM	0	178	7	0	185	0	0	0	0	0	48	160	0	10	218	34	0	47	0	81	484
08:15 AM	0	140	5	1	146	0	0	0	0	0	48	160	0	3	211	26	0	40	0	66	423
08:30 AM	0	129	11	0	140	0	0	0	0	0	47	132	0	7	186	34	0	31	0	65	391
08:45 AM	0	128	8	3	139	0	0	0	0	0	56	137	0	11	204	20	0	35	0	55	398
Total	0	575	31	4	610	0	0	0	0	0	199	589	0	31	819	114	0	153	0	267	1696
09:00 AM	0	109	4	0	113	0	0	0	0	0	44	94	0	7	145	20	0	33	0	53	311
09:15 AM	0	123	4	0	127	0	0	0	0	0	49	112	0	4	165	25	0	26	0	51	343
09:30 AM	0	122	1	1	124	0	0	0	0	0	44	135	0	3	182	27	0	31	0	58	364
09:45 AM	0	136	6	3	145	0	0	0	0	0	31	118	0	2	151	19	0	27	0	46	342
Total	0	490	15	4	509	0	0	0	0	0	168	459	0	16	643	91	0	117	0	208	1360
10:00 AM	0	115	7	0	122	0	0	0	0	0	45	133	0	5	183	16	0	34	0	50	355
10:15 AM	0	121	7	0	128	0	0	0	0	0	37	122	0	7	166	35	0	43	0	78	372
10:30 AM	0	125	10	0	135	0	0	0	0	0	40	133	0	8	181	29	0	43	0	72	388
10:45 AM	0	134	10	1	145	0	0	0	0	0	47	114	0	4	165	16	0	58	0	74	384
Total	0	495	34	1	530	0	0	0	0	0	169	502	0	24	695	96	0	178	0	274	1499
11:00 AM	0	132	0	0	132	0	0	0	0	0	56	126	0	6	188	14	0	34	1	49	369
11:15 AM	0	130	8	0	138	0	0	0	0	0	53	123	0	4	180	18	0	36	0	54	372
11:30 AM	0	138	19	0	157	0	0	0	0	0	50	131	0	4	185	24	0	33	1	58	400
11:45 AM	0	148	11	0	159	0	0	0	0	0	63	127	0	9	199	18	0	52	0	70	428
Total	0	548	38	0	586	0	0	0	0	0	222	507	0	23	752	74	0	155	2	231	1569
12:00 PM	0	156	9	0	165	0	0	0	0	0	66	156	0	8	230	30	0	50	0	80	475
12:15 PM	0	142	9	0	151	0	0	0	0	0	70	167	0	6	243	20	0	39	0	59	453
12:30 PM	0	155	9	1	165	0	0	0	0	0	62	172	0	10	244	18	0	49	0	67	476
12:45 PM	0	160	12	0	172	0	0	0	0	0	76	195	0	8	279	24	0	35	0	59	510
Total	0	613	39	1	653	0	0	0	0	0	274	690	0	32	996	92	0	173	0	265	1914
01:00 PM	0	147	8	0	155	0	0	0	0	0	74	151	0	14	239	24	0	59	0	83	477
01:15 PM	0	157	7	2	166	0	0	0	0	0	71	151	0	12	234	24	0	62	0	86	486
01:30 PM	0	172	7	0	179	0	0	0	0	0	55	161	0	10	226	19	0	37	0	56	461
01:45 PM	0	147	11	1	159	0	0	0	0	0	43	149	0	9	201	25	0	41	0	66	426
Total	0	623	33	3	659	0	0	0	0	0	243	612	0	45	900	92	0	199	0	291	1850
02:00 PM	0	160	8	1	169	0	0	0	0	0	62	182	0	11	255	29	0	46	0	75	499
02:15 PM	0	146	5	0	151	0	0	0	0	0	62	201	0	10	273	34	0	50	0	84	508
02:30 PM	0	171	11	0	182	0	0	0	0	0	66	183	0	6	255	38	0	52	1	91	528
02:45 PM	0	178	12	0	190	0	0	0	0	0	78	212	0	3	293	41	0	49	0	90	573
Total	0	655	36	1	692	0	0	0	0	0	268	778	0	30	1076	142	0	197	1	340	2108
03:00 PM	0	181	7	0	188	0	0	0	0	0	73	203	0	6	282	33	0	49	0	82	552
03:15 PM	0	199	13	0	212	0	0	0	0	0	86	203	0	10	299	26	0	58	0	84	595
03:30 PM	0	164	6	0	170	0	0	0	0	0	89	194	0	4	287	33	0	49	0	82	539

DocuSign Envelope ID: 5C03745C-4B01-4834-A65D-B77F558A4F46

Quality Counts

920 Blairhill Rd, Ste B-106
Charlotte, NC 28217

File Name : 15411701 - Brevard Rd -- I-26 WB Ramps
Site Code : 15411701
Start Date : 4/20/2021
Page No : 2

Groups Printed- Classes 1, 2, 3 - Classes 4, 5, 6, 7 - Classes 8, 9, 10 - Classes 11, 12, 13

	Brevard Rd Southbound					Westbound					Brevard Rd Northbound					I-26 WB Ramps Eastbound					
Start Time	Left	Thru	Right	U-Turn	App. Total	Left	Thru	Right	U-Turn	App. Total	Left	Thru	Right	U-Turn	App. Total	Left	Thru	Right	U-Turn	App. Total	Int. Total
03:45 PM	0	162	6	0	168	0	0	0	0	0	77	176	0	5	258	33	0	52	0	85	511
Total	0	706	32	0	738	0	0	0	0	0	325	776	0	25	1126	125	0	208	0	333	2197
04:00 PM	0	175	6	0	181	0	0	0	0	0	93	221	0	10	324	27	0	43	0	70	575
04:15 PM	0	170	7	0	177	0	0	0	0	0	101	206	0	3	310	29	0	46	1	76	563
04:30 PM	0	184	9	0	193	0	0	0	0	0	60	200	0	3	263	26	0	41	0	67	523
04:45 PM	0	172	11	0	183	0	0	0	0	0	75	204	0	4	283	21	0	67	0	88	554
Total	0	701	33	0	734	0	0	0	0	0	329	831	0	20	1180	103	0	197	1	301	2215
05:00 PM	0	195	7	0	202	0	0	0	0	0	92	218	0	4	314	42	0	62	0	104	620
05:15 PM	0	188	5	0	193	0	0	0	0	0	98	209	0	8	315	34	0	65	0	99	607
05:30 PM	0	161	10	0	171	0	0	0	0	0	89	232	0	4	325	26	0	50	0	76	572
05:45 PM	0	126	7	0	133	0	0	0	0	0	73	187	0	6	266	21	0	36	0	57	456
Total	0	670	29	0	699	0	0	0	0	0	352	846	0	22	1220	123	0	213	0	336	2255
06:00 PM	0	141	15	0	156	0	0	0	0	0	66	152	0	2	220	18	0	43	0	61	437
06:15 PM	0	106	8	0	114	0	0	0	0	0	54	105	0	4	163	13	0	40	0	53	330
06:30 PM	0	97	4	0	101	0	0	0	0	0	39	132	0	2	173	12	0	27	0	39	313
06:45 PM	0	76	6	0	82	0	0	0	0	0	53	113	0	4	170	15	0	34	0	49	301
Total	0	420	33	0	453	0	0	0	0	0	212	502	0	12	726	58	0	144	0	202	1381
Grand Total	0	7249	395	14	7658	0	0	0	0	0	3018	7857	0	299	11174	1371	0	2227	4	3602	22434
Apprch %	0	94.7	5.2	0.2		0	0	0	0		27	70.3	0	2.7		38.1	0	61.8	0.1		
Total %	0	32.3	1.8	0.1	34.1	0	0	0	0	0	13.5	35	0	1.3	49.8	6.1	0	9.9	0	16.1	
Classes 1, 2, 3	0	6757	370	14	7141	0	0	0	0	0	2937	7421	0	298	10656	1221	0	2040	4	3265	21062
% Classes 1, 2, 3	0	93.2	93.7	100	93.2	0	0	0	0	0	97.3	94.5	0	99.7	95.4	89.1	0	91.6	100	90.6	93.9
Classes 4, 5, 6, 7	0	381	21	0	402	0	0	0	0	0	54	352	0	1	407	104	0	103	0	207	1016
% Classes 4, 5, 6, 7	0	5.3	5.3	0	5.2	0	0	0	0	0	1.8	4.5	0	0.3	3.6	7.6	0	4.6	0	5.7	4.5
Classes 8, 9, 10	0	111	4	0	115	0	0	0	0	0	27	84	0	0	111	46	0	84	0	130	356
% Classes 8, 9, 10	0	1.5	1	0	1.5	0	0	0	0	0	0.9	1.1	0	0	1	3.4	0	3.8	0	3.6	1.6
Classes 11, 12, 13	0	0	0	0	0	0	0	0	0	0	0	0	0	0	0	0	0	0	0	0	0
% Classes 11, 12, 13	0	0	0	0	0	0	0	0	0	0	0	0	0	0	0	0	0	0	0	0	0

DocuSign Envelope ID: 5C03745C-4B01-4834-A65D-B77F558A4F46

Quality Counts

920 Blairhill Rd, Ste B-106
Charlotte, NC 28217

File Name : 15411701 - Brevard Rd -- I-26 WB Ramps
Site Code : 15411701
Start Date : 4/20/2021
Page No : 3

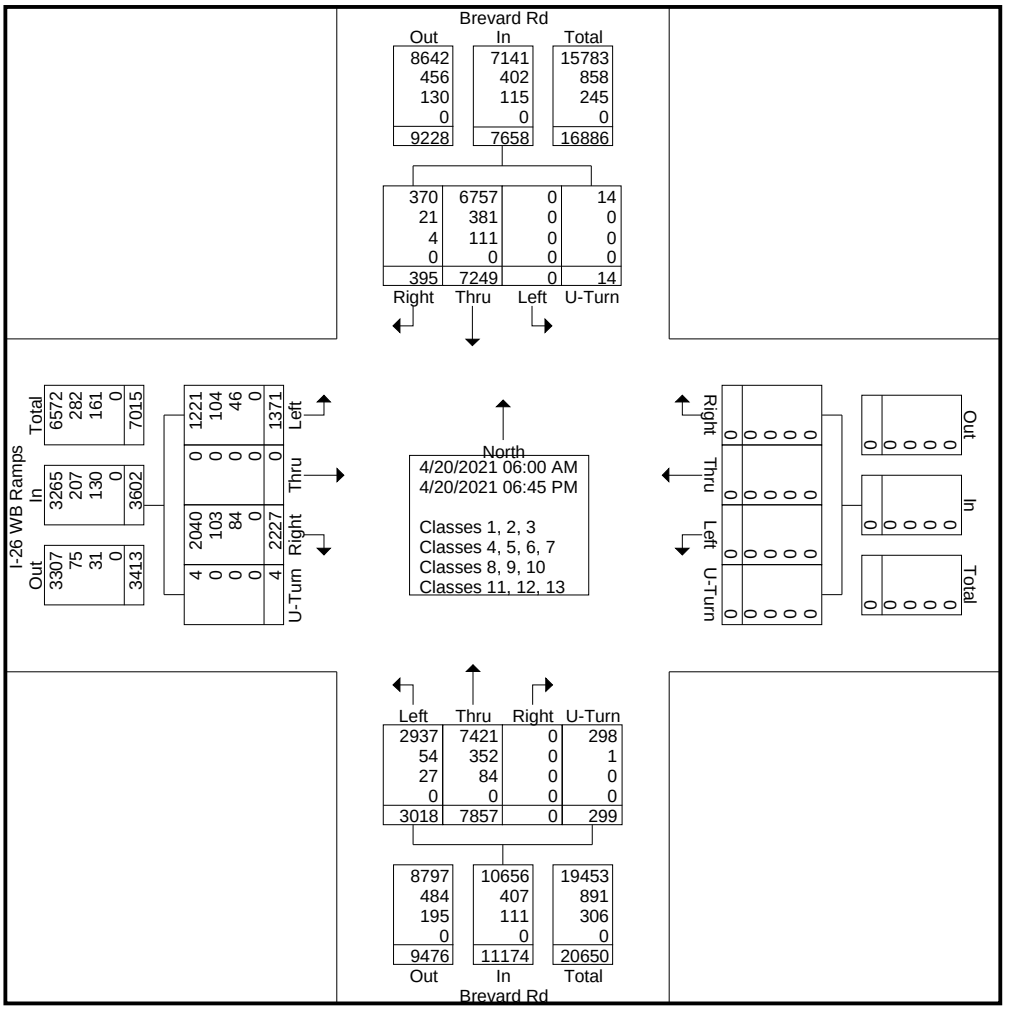

DocuSign Envelope ID: 5C03745C-4B01-4834-A65D-B77F558A4F46

Quality Counts

920 Blairhill Rd, Ste B-106
Charlotte, NC 28217

File Name : 15411701 - Brevard Rd -- I-26 WB Ramps
Site Code : 15411701
Start Date : 4/20/2021
Page No : 4

	Brevard Rd Southbound					Westbound					Brevard Rd Northbound					I-26 WB Ramps Eastbound					
Start Time	Left	Thru	Right	U-Turn	App. Total	Left	Thru	Right	U-Turn	App. Total	Left	Thru	Right	U-Turn	App. Total	Left	Thru	Right	U-Turn	App. Total	Int. Total
Peak Hour Analysis From 06:00 AM to 11:45 AM - Peak 1 of 1																					
Peak Hour for Entire Intersection Begins at 07:30 AM																					
07:30 AM	0	146	**14**	0	160	0	0	0	0	0	49	149	0	1	199	**58**	0	39	0	97	456
07:45 AM	0	**178**	8	0	**186**	0	0	0	0	0	**57**	154	0	4	215	51	0	**59**	0	**110**	**511**
08:00 AM	0	178	7	0	185	0	0	0	0	0	48	**160**	0	**10**	**218**	34	0	47	0	81	484
08:15 AM	0	140	5	**1**	146	0	0	0	0	0	48	160	0	3	211	26	0	40	0	66	423
Total Volume	0	642	34	1	677	0	0	0	0	0	202	623	0	18	843	169	0	185	0	354	1874
% App. Total	0	94.8	5	0.1		0	0	0	0		24	73.9	0	2.1		47.7	0	52.3	0		
PHF	.000	.902	.607	.250	.910	.000	.000	.000	.000	.000	.886	.973	.000	.450	.967	.728	.000	.784	.000	.805	.917

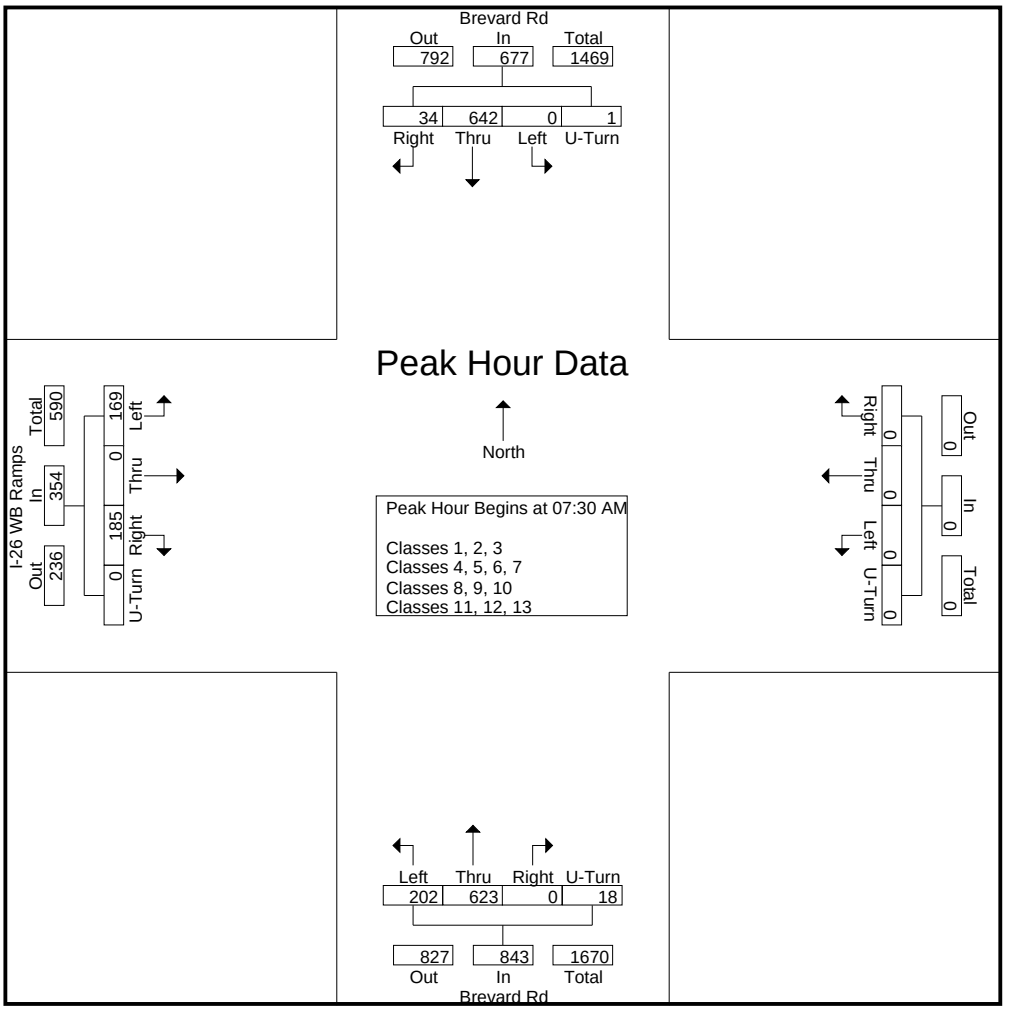

DocuSign Envelope ID: 5C03745C-4B01-4834-A65D-B77F558A4F46

Quality Counts

920 Blairhill Rd, Ste B-106
Charlotte, NC 28217

File Name : 15411701 - Brevard Rd -- I-26 WB Ramps
Site Code : 15411701
Start Date : 4/20/2021
Page No : 5

	Brevard Rd Southbound					Westbound					Brevard Rd Northbound					I-26 WB Ramps Eastbound					
Start Time	Left	Thru	Right	U-Turn	App. Total	Left	Thru	Right	U-Turn	App. Total	Left	Thru	Right	U-Turn	App. Total	Left	Thru	Right	U-Turn	App. Total	Int. Total
Peak Hour Analysis From 12:00 PM to 06:45 PM - Peak 1 of 1																					
Peak Hour for Entire Intersection Begins at 04:45 PM																					
04:45 PM	0	172	**11**	0	183	0	0	0	0	0	75	204	0	4	283	21	0	**67**	0	88	554
05:00 PM	0	**195**	7	0	**202**	0	0	0	0	0	92	218	0	4	314	**42**	0	62	0	**104**	**620**
05:15 PM	0	188	5	0	193	0	0	0	0	0	**98**	209	0	**8**	315	34	0	65	0	99	607
05:30 PM	0	161	10	0	171	0	0	0	0	0	89	**232**	0	4	**325**	26	0	50	0	76	572
Total Volume	0	716	33	0	749	0	0	0	0	0	354	863	0	20	1237	123	0	244	0	367	2353
% App. Total	0	95.6	4.4	0		0	0	0	0		28.6	69.8	0	1.6		33.5	0	66.5	0		
PHF	.000	.918	.750	.000	.927	.000	.000	.000	.000	.000	.903	.930	.000	.625	.952	.732	.000	.910	.000	.882	.949

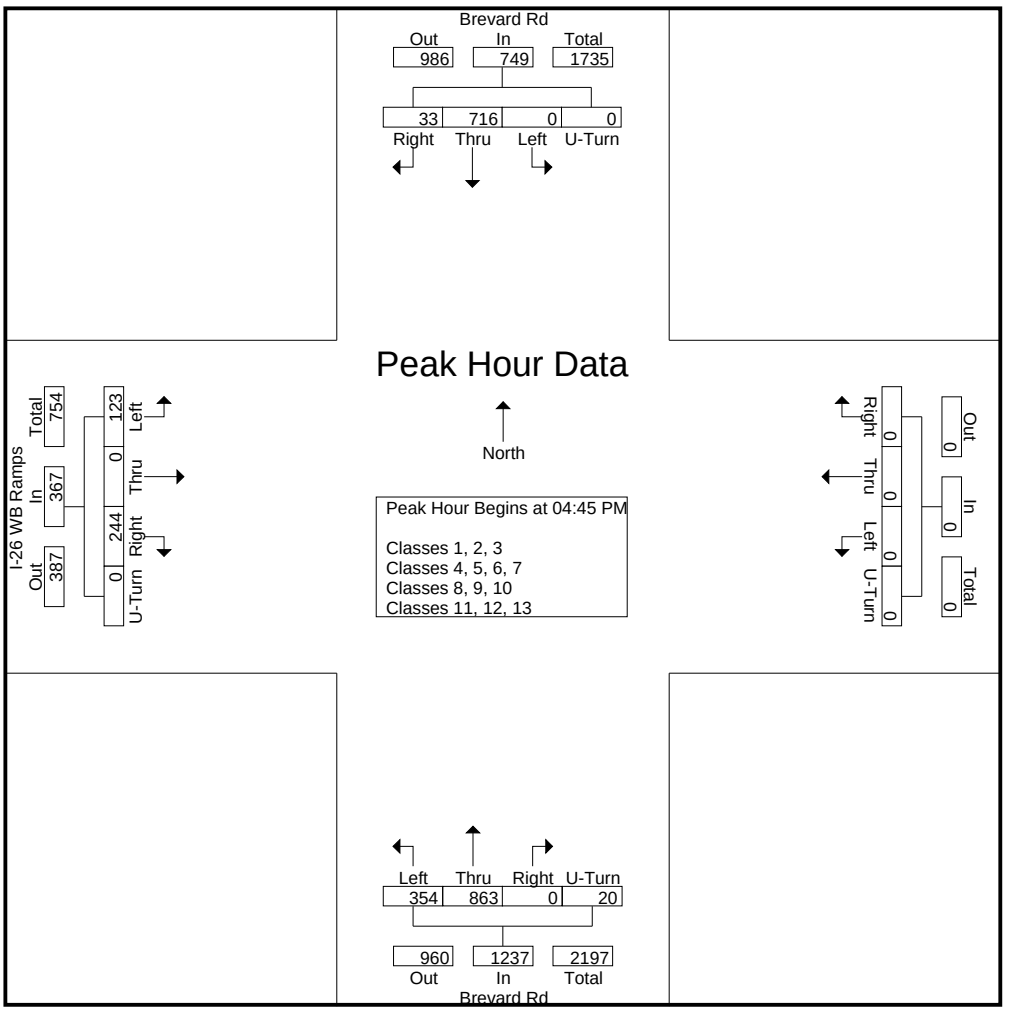

DocuSign Envelope ID: 5C03745C-4B01-4834-A65D-B77F558A4F46

Quality Counts

920 Blairhill Rd, Ste B-106
Charlotte, NC 28217

File Name : 15411701 - Brevard Rd -- I-26 WB Ramps
Site Code : 15411701
Start Date : 4/20/2021
Page No : 1

Groups Printed- Classes 1, 2, 3

	Brevard Rd Southbound					Westbound					Brevard Rd Northbound					I-26 WB Ramps Eastbound					
Start Time	Left	Thru	Right	U-Turn	App. Total	Left	Thru	Right	U-Turn	App. Total	Left	Thru	Right	U-Turn	App. Total	Left	Thru	Right	U-Turn	App. Total	Int. Total
06:00 AM	0	28	1	0	29	0	0	0	0	0	9	36	0	1	46	7	0	16	0	23	98
06:15 AM	0	36	0	0	36	0	0	0	0	0	15	34	0	0	49	8	0	26	0	34	119
06:30 AM	0	58	3	0	61	0	0	0	0	0	16	63	0	2	81	19	0	33	0	52	194
06:45 AM	0	79	7	0	86	0	0	0	0	0	24	51	0	3	78	23	0	40	0	63	227
Total	0	201	11	0	212	0	0	0	0	0	64	184	0	6	254	57	0	115	0	172	638
07:00 AM	0	77	5	0	82	0	0	0	0	0	31	113	0	5	149	36	0	31	0	67	298
07:15 AM	0	113	1	0	114	0	0	0	0	0	45	128	0	3	176	47	0	35	0	82	372
07:30 AM	0	132	14	0	146	0	0	0	0	0	47	139	0	1	187	54	0	34	0	88	421
07:45 AM	0	164	8	0	172	0	0	0	0	0	54	146	0	4	204	50	0	54	0	104	480
Total	0	486	28	0	514	0	0	0	0	0	177	526	0	13	716	187	0	154	0	341	1571
08:00 AM	0	167	7	0	174	0	0	0	0	0	44	146	0	10	200	32	0	44	0	76	450
08:15 AM	0	130	4	1	135	0	0	0	0	0	45	152	0	3	200	22	0	37	0	59	394
08:30 AM	0	120	10	0	130	0	0	0	0	0	45	128	0	7	180	29	0	29	0	58	368
08:45 AM	0	116	6	3	125	0	0	0	0	0	52	127	0	11	190	16	0	31	0	47	362
Total	0	533	27	4	564	0	0	0	0	0	186	553	0	31	770	99	0	141	0	240	1574
09:00 AM	0	98	4	0	102	0	0	0	0	0	44	86	0	6	136	19	0	27	0	46	284
09:15 AM	0	111	4	0	115	0	0	0	0	0	47	101	0	4	152	21	0	24	0	45	312
09:30 AM	0	109	1	1	111	0	0	0	0	0	42	121	0	3	166	25	0	27	0	52	329
09:45 AM	0	118	6	3	127	0	0	0	0	0	31	105	0	2	138	13	0	25	0	38	303
Total	0	436	15	4	455	0	0	0	0	0	164	413	0	15	592	78	0	103	0	181	1228
10:00 AM	0	103	6	0	109	0	0	0	0	0	41	119	0	5	165	10	0	29	0	39	313
10:15 AM	0	102	6	0	108	0	0	0	0	0	36	109	0	7	152	29	0	39	0	68	328
10:30 AM	0	113	9	0	122	0	0	0	0	0	38	126	0	8	172	24	0	39	0	63	357
10:45 AM	0	118	10	1	129	0	0	0	0	0	45	105	0	4	154	11	0	50	0	61	344
Total	0	436	31	1	468	0	0	0	0	0	160	459	0	24	643	74	0	157	0	231	1342
11:00 AM	0	124	0	0	124	0	0	0	0	0	55	118	0	6	179	12	0	31	1	44	347
11:15 AM	0	120	8	0	128	0	0	0	0	0	52	113	0	4	169	16	0	32	0	48	345
11:30 AM	0	128	18	0	146	0	0	0	0	0	49	120	0	4	173	21	0	27	1	49	368
11:45 AM	0	133	10	0	143	0	0	0	0	0	58	118	0	9	185	14	0	48	0	62	390
Total	0	505	36	0	541	0	0	0	0	0	214	469	0	23	706	63	0	138	2	203	1450
12:00 PM	0	141	8	0	149	0	0	0	0	0	66	148	0	8	222	25	0	44	0	69	440
12:15 PM	0	133	8	0	141	0	0	0	0	0	67	152	0	6	225	19	0	33	0	52	418
12:30 PM	0	142	9	1	152	0	0	0	0	0	59	164	0	10	233	16	0	44	0	60	445
12:45 PM	0	145	11	0	156	0	0	0	0	0	75	188	0	8	271	19	0	33	0	52	479
Total	0	561	36	1	598	0	0	0	0	0	267	652	0	32	951	79	0	154	0	233	1782
01:00 PM	0	131	8	0	139	0	0	0	0	0	72	142	0	14	228	22	0	49	0	71	438
01:15 PM	0	151	5	2	158	0	0	0	0	0	70	141	0	12	223	20	0	52	0	72	453
01:30 PM	0	159	7	0	166	0	0	0	0	0	51	151	0	10	212	16	0	35	0	51	429
01:45 PM	0	137	10	1	148	0	0	0	0	0	43	142	0	9	194	20	0	37	0	57	399
Total	0	578	30	3	611	0	0	0	0	0	236	576	0	45	857	78	0	173	0	251	1719
02:00 PM	0	154	7	1	162	0	0	0	0	0	60	173	0	11	244	26	0	43	0	69	475
02:15 PM	0	134	5	0	139	0	0	0	0	0	61	192	0	10	263	32	0	44	0	76	478
02:30 PM	0	162	11	0	173	0	0	0	0	0	65	170	0	6	241	38	0	45	1	84	498
02:45 PM	0	169	11	0	180	0	0	0	0	0	78	203	0	3	284	37	0	45	0	82	546
Total	0	619	34	1	654	0	0	0	0	0	264	738	0	30	1032	133	0	177	1	311	1997
03:00 PM	0	171	7	0	178	0	0	0	0	0	70	194	0	6	270	26	0	47	0	73	521
03:15 PM	0	187	13	0	200	0	0	0	0	0	85	195	0	10	290	23	0	56	0	79	569
03:30 PM	0	153	6	0	159	0	0	0	0	0	89	183	0	4	276	32	0	45	0	77	512

DocuSign Envelope ID: 5C03745C-4B01-4834-A65D-B77F558A4F46

Quality Counts

920 Blairhill Rd, Ste B-106
Charlotte, NC 28217

File Name : 15411701 - Brevard Rd -- I-26 WB Ramps
Site Code : 15411701
Start Date : 4/20/2021

Groups Printed- Classes 1, 2, 3

	Brevard Rd Southbound					Westbound					Brevard Rd Northbound					I-26 WB Ramps Eastbound					
Start Time	Left	Thru	Right	U-Turn	App. Total	Left	Thru	Right	U-Turn	App. Total	Left	Thru	Right	U-Turn	App. Total	Left	Thru	Right	U-Turn	App. Total	Int. Total
03:45 PM	0	149	6	0	155	0	0	0	0	0	75	171	0	5	251	31	0	50	0	81	487
Total	0	660	32	0	692	0	0	0	0	0	319	743	0	25	1087	112	0	198	0	310	2089
04:00 PM	0	166	6	0	172	0	0	0	0	0	91	209	0	10	310	25	0	38	0	63	545
04:15 PM	0	160	7	0	167	0	0	0	0	0	101	195	0	3	299	26	0	45	1	72	538
04:30 PM	0	178	8	0	186	0	0	0	0	0	60	194	0	3	257	23	0	40	0	63	506
04:45 PM	0	168	10	0	178	0	0	0	0	0	74	195	0	4	273	19	0	64	0	83	534
Total	0	672	31	0	703	0	0	0	0	0	326	793	0	20	1139	93	0	187	1	281	2123
05:00 PM	0	192	6	0	198	0	0	0	0	0	91	213	0	4	308	38	0	61	0	99	605
05:15 PM	0	184	5	0	189	0	0	0	0	0	97	199	0	8	304	34	0	62	0	96	589
05:30 PM	0	158	10	0	168	0	0	0	0	0	87	227	0	4	318	22	0	49	0	71	557
05:45 PM	0	123	7	0	130	0	0	0	0	0	73	182	0	6	261	20	0	33	0	53	444
Total	0	657	28	0	685	0	0	0	0	0	348	821	0	22	1191	114	0	205	0	319	2195
06:00 PM	0	140	15	0	155	0	0	0	0	0	66	149	0	2	217	16	0	41	0	57	429
06:15 PM	0	102	8	0	110	0	0	0	0	0	54	103	0	4	161	12	0	38	0	50	321
06:30 PM	0	96	4	0	100	0	0	0	0	0	39	131	0	2	172	12	0	26	0	38	310
06:45 PM	0	75	4	0	79	0	0	0	0	0	53	111	0	4	168	14	0	33	0	47	294
Total	0	413	31	0	444	0	0	0	0	0	212	494	0	12	718	54	0	138	0	192	1354
Grand Total	0	6757	370	14	7141	0	0	0	0	0	2937	7421	0	298	10656	1221	0	2040	4	3265	21062
Apprch %	0	94.6	5.2	0.2		0	0	0	0		27.6	69.6	0	2.8		37.4	0	62.5	0.1		
Total %	0	32.1	1.8	0.1	33.9	0	0	0	0	0	13.9	35.2	0	1.4	50.6	5.8	0	9.7	0	15.5	

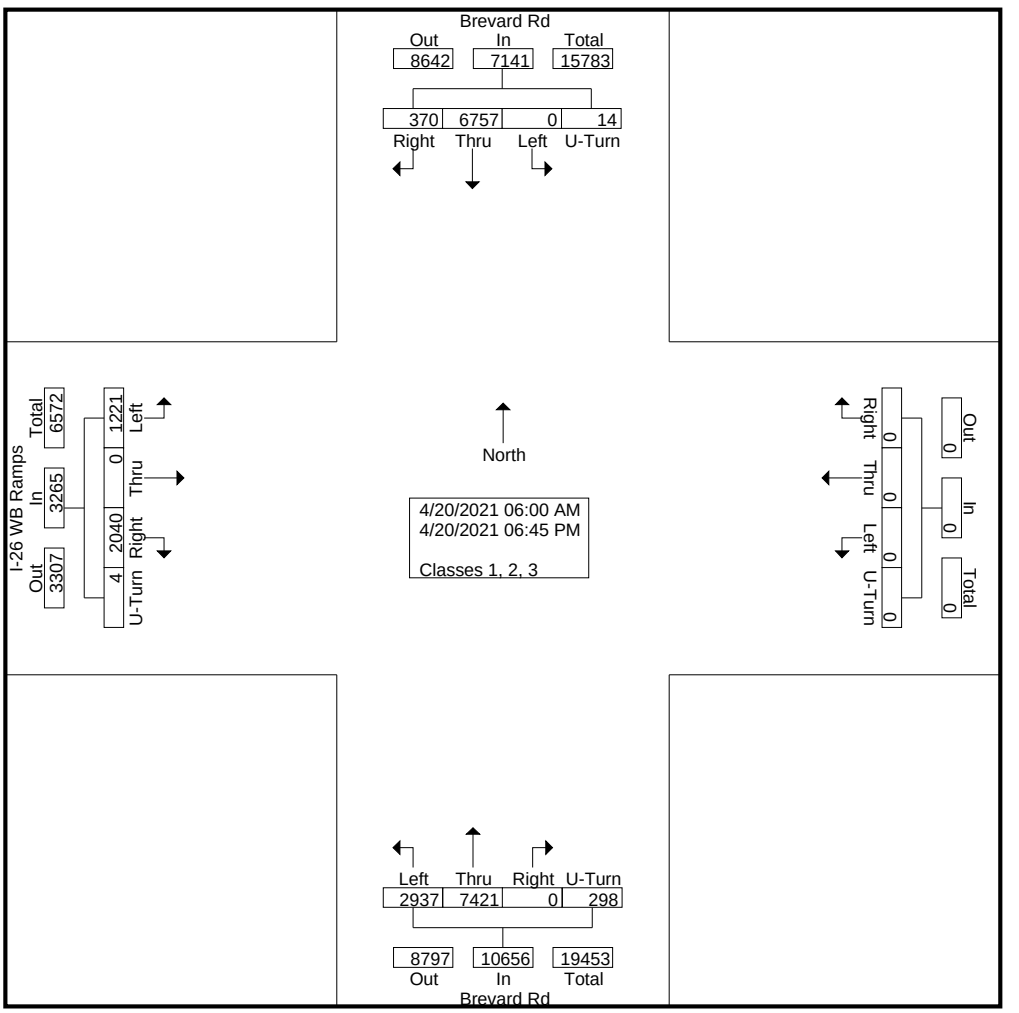

DocuSign Envelope ID: 5C03745C-4B01-4834-A65D-B77F558A4F46

Quality Counts

920 Blairhill Rd, Ste B-106
Charlotte, NC 28217

File Name : 15411701 - Brevard Rd -- I-26 WB Ramps
Site Code : 15411701
Start Date : 4/20/2021
Page No : 3

	Brevard Rd Southbound					Westbound					Brevard Rd Northbound					I-26 WB Ramps Eastbound					
Start Time	Left	Thru	Right	U-Turn	App. Total	Left	Thru	Right	U-Turn	App. Total	Left	Thru	Right	U-Turn	App. Total	Left	Thru	Right	U-Turn	App. Total	Int. Total
Peak Hour Analysis From 06:00 AM to 11:45 AM - Peak 1 of 1																					
Peak Hour for Entire Intersection Begins at 07:30 AM																					
07:30 AM	0	132	**14**	0	146	0	0	0	0	0	47	139	0	1	187	**54**	0	34	0	88	421
07:45 AM	0	164	8	0	172	0	0	0	0	0	**54**	146	0	4	**204**	50	0	**54**	0	**104**	**480**
08:00 AM	0	**167**	7	0	**174**	0	0	0	0	0	44	146	0	**10**	200	32	0	44	0	76	450
08:15 AM	0	130	4	**1**	135	0	0	0	0	0	45	**152**	0	3	200	22	0	37	0	59	394
Total Volume	0	593	33	1	627	0	0	0	0	0	190	583	0	18	791	158	0	169	0	327	1745
% App. Total	0	94.6	5.3	0.2		0	0	0	0		24	73.7	0	2.3		48.3	0	51.7	0		
PHF	.000	.888	.589	.250	.901	.000	.000	.000	.000	.000	.880	.959	.000	.450	.969	.731	.000	.782	.000	.786	.909

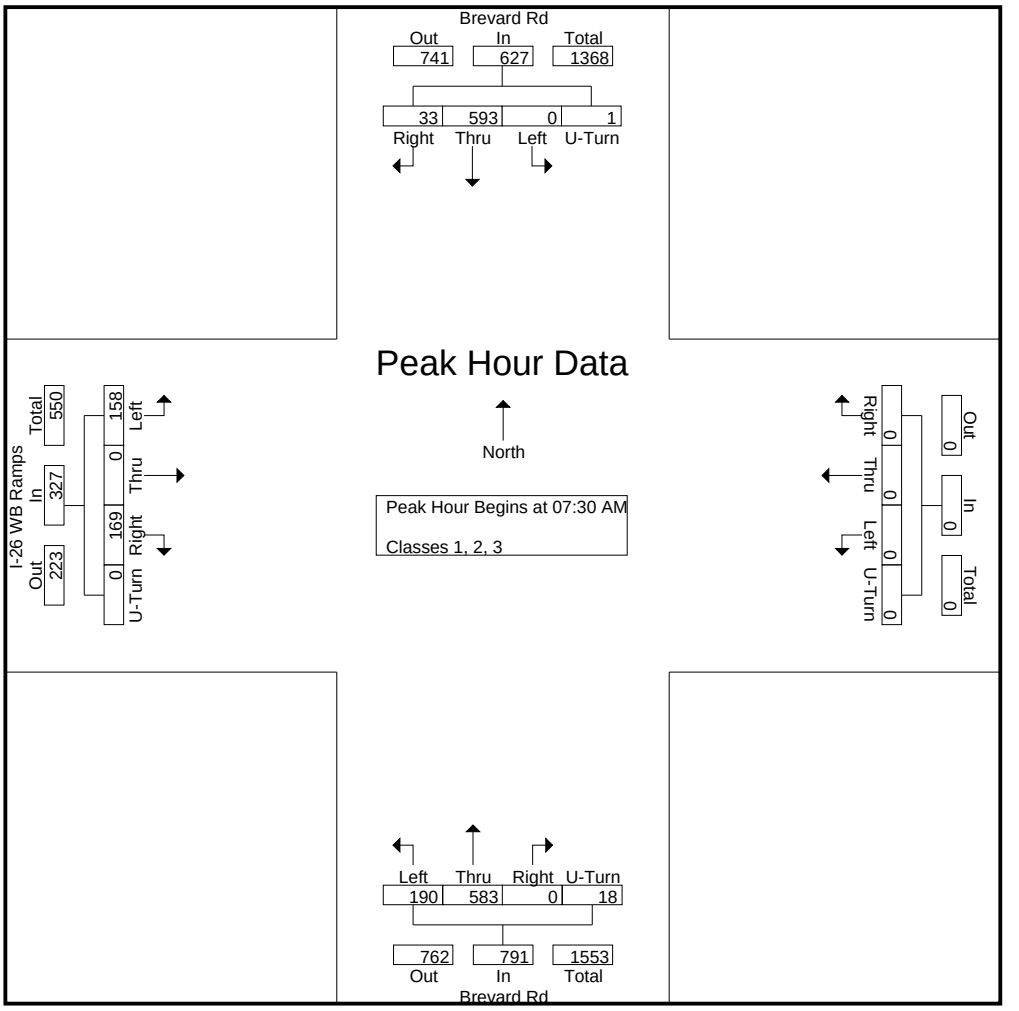

DocuSign Envelope ID: 5C03745C-4B01-4834-A65D-B77F558A4F46

Quality Counts

920 Blairhill Rd, Ste B-106
Charlotte, NC 28217

File Name : 15411701 - Brevard Rd -- I-26 WB Ramps
Site Code : 15411701
Start Date : 4/20/2021
Page No : 4

	Brevard Rd Southbound					Westbound					Brevard Rd Northbound					I-26 WB Ramps Eastbound					
Start Time	Left	Thru	Right	U-Turn	App. Total	Left	Thru	Right	U-Turn	App. Total	Left	Thru	Right	U-Turn	App. Total	Left	Thru	Right	U-Turn	App. Total	Int. Total
Peak Hour Analysis From 12:00 PM to 06:45 PM - Peak 1 of 1																					
Peak Hour for Entire Intersection Begins at 04:45 PM																					
04:45 PM	0	168	**10**	0	178	0	0	0	0	0	74	195	0	4	273	19	0	**64**	0	83	534
05:00 PM	0	**192**	6	0	**198**	0	0	0	0	0	91	213	0	4	308	**38**	0	61	0	**99**	**605**
05:15 PM	0	184	5	0	189	0	0	0	0	0	**97**	199	0	**8**	304	34	0	62	0	96	589
05:30 PM	0	158	10	0	168	0	0	0	0	0	87	**227**	0	4	**318**	22	0	49	0	71	557
Total Volume	0	702	31	0	733	0	0	0	0	0	349	834	0	20	1203	113	0	236	0	349	2285
% App. Total	0	95.8	4.2	0		0	0	0	0		29	69.3	0	1.7		32.4	0	67.6	0		
PHF	.000	.914	.775	.000	.926	.000	.000	.000	.000	.000	.899	.919	.000	.625	.946	.743	.000	.922	.000	.881	.944

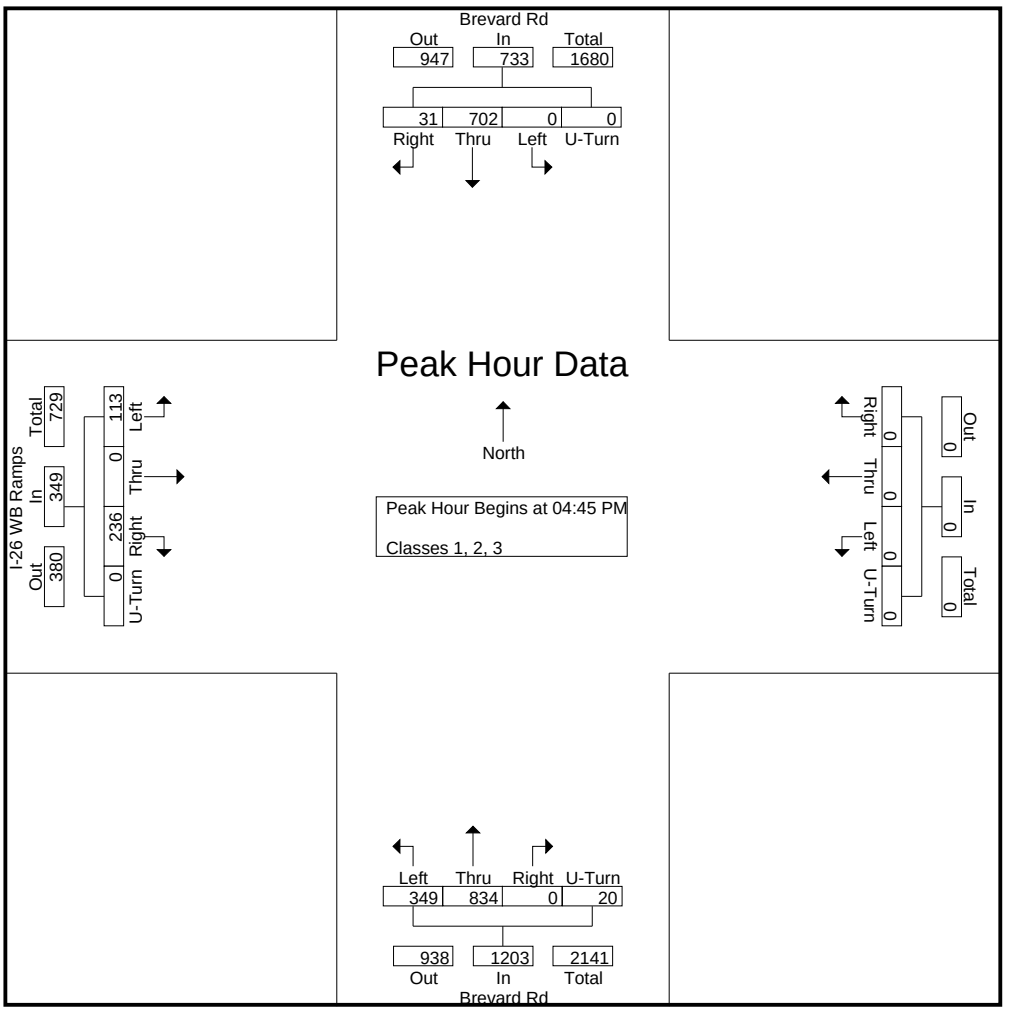

DocuSign Envelope ID: 5C03745C-4B01-4834-A65D-B77F558A4F46

Quality Counts

920 Blairhill Rd, Ste B-106
Charlotte, NC 28217

File Name : 15411701 - Brevard Rd -- I-26 WB Ramps
Site Code : 15411701
Start Date : 4/20/2021
Page No : 1

Groups Printed- Classes 4, 5, 6, 7

	Brevard Rd Southbound					Westbound					Brevard Rd Northbound					I-26 WB Ramps Eastbound					
Start Time	Left	Thru	Right	U-Turn	App. Total	Left	Thru	Right	U-Turn	App. Total	Left	Thru	Right	U-Turn	App. Total	Left	Thru	Right	U-Turn	App. Total	Int. Total
06:00 AM	0	2	0	0	2	0	0	0	0	0	1	2	0	0	3	0	0	0	0	0	5
06:15 AM	0	4	0	0	4	0	0	0	0	0	1	5	0	0	6	0	0	2	0	2	12
06:30 AM	0	1	1	0	2	0	0	0	0	0	1	9	0	0	10	1	0	2	0	3	15
06:45 AM	0	9	1	0	10	0	0	0	0	0	0	8	0	0	8	5	0	1	0	6	24
Total	0	16	2	0	18	0	0	0	0	0	3	24	0	0	27	6	0	5	0	11	56
07:00 AM	0	11	0	0	11	0	0	0	0	0	2	8	0	0	10	0	0	0	0	0	21
07:15 AM	0	6	1	0	7	0	0	0	0	0	3	1	0	0	4	1	0	2	0	3	14
07:30 AM	0	11	0	0	11	0	0	0	0	0	1	9	0	0	10	3	0	4	0	7	28
07:45 AM	0	12	0	0	12	0	0	0	0	0	2	5	0	0	7	1	0	1	0	2	21
Total	0	40	1	0	41	0	0	0	0	0	8	23	0	0	31	5	0	7	0	12	84
08:00 AM	0	10	0	0	10	0	0	0	0	0	2	11	0	0	13	1	0	2	0	3	26
08:15 AM	0	7	1	0	8	0	0	0	0	0	1	6	0	0	7	4	0	0	0	4	19
08:30 AM	0	6	1	0	7	0	0	0	0	0	2	3	0	0	5	1	0	0	0	1	13
08:45 AM	0	8	2	0	10	0	0	0	0	0	4	9	0	0	13	2	0	1	0	3	26
Total	0	31	4	0	35	0	0	0	0	0	9	29	0	0	38	8	0	3	0	11	84
09:00 AM	0	6	0	0	6	0	0	0	0	0	0	7	0	1	8	0	0	3	0	3	17
09:15 AM	0	6	0	0	6	0	0	0	0	0	0	6	0	0	6	4	0	1	0	5	17
09:30 AM	0	8	0	0	8	0	0	0	0	0	0	11	0	0	11	2	0	2	0	4	23
09:45 AM	0	12	0	0	12	0	0	0	0	0	0	9	0	0	9	3	0	1	0	4	25
Total	0	32	0	0	32	0	0	0	0	0	0	33	0	1	34	9	0	7	0	16	82
10:00 AM	0	9	1	0	10	0	0	0	0	0	2	14	0	0	16	4	0	2	0	6	32
10:15 AM	0	17	1	0	18	0	0	0	0	0	1	11	0	0	12	5	0	3	0	8	38
10:30 AM	0	9	0	0	9	0	0	0	0	0	2	6	0	0	8	3	0	4	0	7	24
10:45 AM	0	12	0	0	12	0	0	0	0	0	2	9	0	0	11	3	0	5	0	8	31
Total	0	47	2	0	49	0	0	0	0	0	7	40	0	0	47	15	0	14	0	29	125
11:00 AM	0	8	0	0	8	0	0	0	0	0	0	7	0	0	7	1	0	2	0	3	18
11:15 AM	0	7	0	0	7	0	0	0	0	0	1	10	0	0	11	2	0	2	0	4	22
11:30 AM	0	9	1	0	10	0	0	0	0	0	1	8	0	0	9	1	0	6	0	7	26
11:45 AM	0	12	1	0	13	0	0	0	0	0	5	7	0	0	12	2	0	3	0	5	30
Total	0	36	2	0	38	0	0	0	0	0	7	32	0	0	39	6	0	13	0	19	96
12:00 PM	0	13	1	0	14	0	0	0	0	0	0	4	0	0	4	3	0	2	0	5	23
12:15 PM	0	7	0	0	7	0	0	0	0	0	1	9	0	0	10	1	0	5	0	6	23
12:30 PM	0	9	0	0	9	0	0	0	0	0	1	8	0	0	9	2	0	3	0	5	23
12:45 PM	0	11	1	0	12	0	0	0	0	0	1	4	0	0	5	3	0	1	0	4	21
Total	0	40	2	0	42	0	0	0	0	0	3	25	0	0	28	9	0	11	0	20	90
01:00 PM	0	12	0	0	12	0	0	0	0	0	1	8	0	0	9	2	0	4	0	6	27
01:15 PM	0	6	2	0	8	0	0	0	0	0	0	8	0	0	8	2	0	3	0	5	21
01:30 PM	0	11	0	0	11	0	0	0	0	0	3	7	0	0	10	3	0	2	0	5	26
01:45 PM	0	9	1	0	10	0	0	0	0	0	0	7	0	0	7	4	0	4	0	8	25
Total	0	38	3	0	41	0	0	0	0	0	4	30	0	0	34	11	0	13	0	24	99
02:00 PM	0	4	1	0	5	0	0	0	0	0	2	8	0	0	10	3	0	1	0	4	19
02:15 PM	0	10	0	0	10	0	0	0	0	0	1	8	0	0	9	1	0	3	0	4	23
02:30 PM	0	7	0	0	7	0	0	0	0	0	1	12	0	0	13	0	0	4	0	4	24
02:45 PM	0	8	1	0	9	0	0	0	0	0	0	8	0	0	8	4	0	3	0	7	24
Total	0	29	2	0	31	0	0	0	0	0	4	36	0	0	40	8	0	11	0	19	90
03:00 PM	0	7	0	0	7	0	0	0	0	0	1	7	0	0	8	6	0	1	0	7	22
03:15 PM	0	7	0	0	7	0	0	0	0	0	1	5	0	0	6	2	0	1	0	3	16
03:30 PM	0	11	0	0	11	0	0	0	0	0	0	9	0	0	9	1	0	2	0	3	23

DocuSign Envelope ID: 5C03745C-4B01-4834-A65D-B77F558A4F46

Quality Counts

920 Blairhill Rd, Ste B-106
Charlotte, NC 28217

File Name : 15411701 - Brevard Rd -- I-26 WB Ramps
Site Code : 15411701
Start Date : 4/20/2021
Page No : 2

Groups Printed- Classes 4, 5, 6, 7

	Brevard Rd Southbound					Westbound					Brevard Rd Northbound					I-26 WB Ramps Eastbound					
Start Time	Left	Thru	Right	U-Turn	App. Total	Left	Thru	Right	U-Turn	App. Total	Left	Thru	Right	U-Turn	App. Total	Left	Thru	Right	U-Turn	App. Total	Int. Total
03:45 PM	0	12	0	0	12	0	0	0	0	0	2	4	0	0	6	2	0	1	0	3	21
Total	0	37	0	0	37	0	0	0	0	0	4	25	0	0	29	11	0	5	0	16	82
04:00 PM	0	7	0	0	7	0	0	0	0	0	2	9	0	0	11	2	0	4	0	6	24
04:15 PM	0	9	0	0	9	0	0	0	0	0	0	8	0	0	8	2	0	1	0	3	20
04:30 PM	0	2	0	0	2	0	0	0	0	0	0	5	0	0	5	3	0	0	0	3	10
04:45 PM	0	3	1	0	4	0	0	0	0	0	1	7	0	0	8	1	0	0	0	1	13
Total	0	21	1	0	22	0	0	0	0	0	3	29	0	0	32	8	0	5	0	13	67
05:00 PM	0	3	1	0	4	0	0	0	0	0	1	5	0	0	6	3	0	0	0	3	13
05:15 PM	0	3	0	0	3	0	0	0	0	0	1	8	0	0	9	0	0	3	0	3	15
05:30 PM	0	1	0	0	1	0	0	0	0	0	0	3	0	0	3	1	0	0	0	1	5
05:45 PM	0	3	0	0	3	0	0	0	0	0	0	4	0	0	4	0	0	2	0	2	9
Total	0	10	1	0	11	0	0	0	0	0	2	20	0	0	22	4	0	5	0	9	42
06:00 PM	0	1	0	0	1	0	0	0	0	0	0	3	0	0	3	2	0	1	0	3	7
06:15 PM	0	2	0	0	2	0	0	0	0	0	0	1	0	0	1	1	0	2	0	3	6
06:30 PM	0	0	0	0	0	0	0	0	0	0	0	1	0	0	1	0	0	1	0	1	2
06:45 PM	0	1	1	0	2	0	0	0	0	0	0	1	0	0	1	1	0	0	0	1	4
Total	0	4	1	0	5	0	0	0	0	0	0	6	0	0	6	4	0	4	0	8	19
Grand Total	0	381	21	0	402	0	0	0	0	0	54	352	0	1	407	104	0	103	0	207	1016
Apprch %	0	94.8	5.2	0		0	0	0	0		13.3	86.5	0	0.2		50.2	0	49.8	0		
Total %	0	37.5	2.1	0	39.6	0	0	0	0	0	5.3	34.6	0	0.1	40.1	10.2	0	10.1	0	20.4	

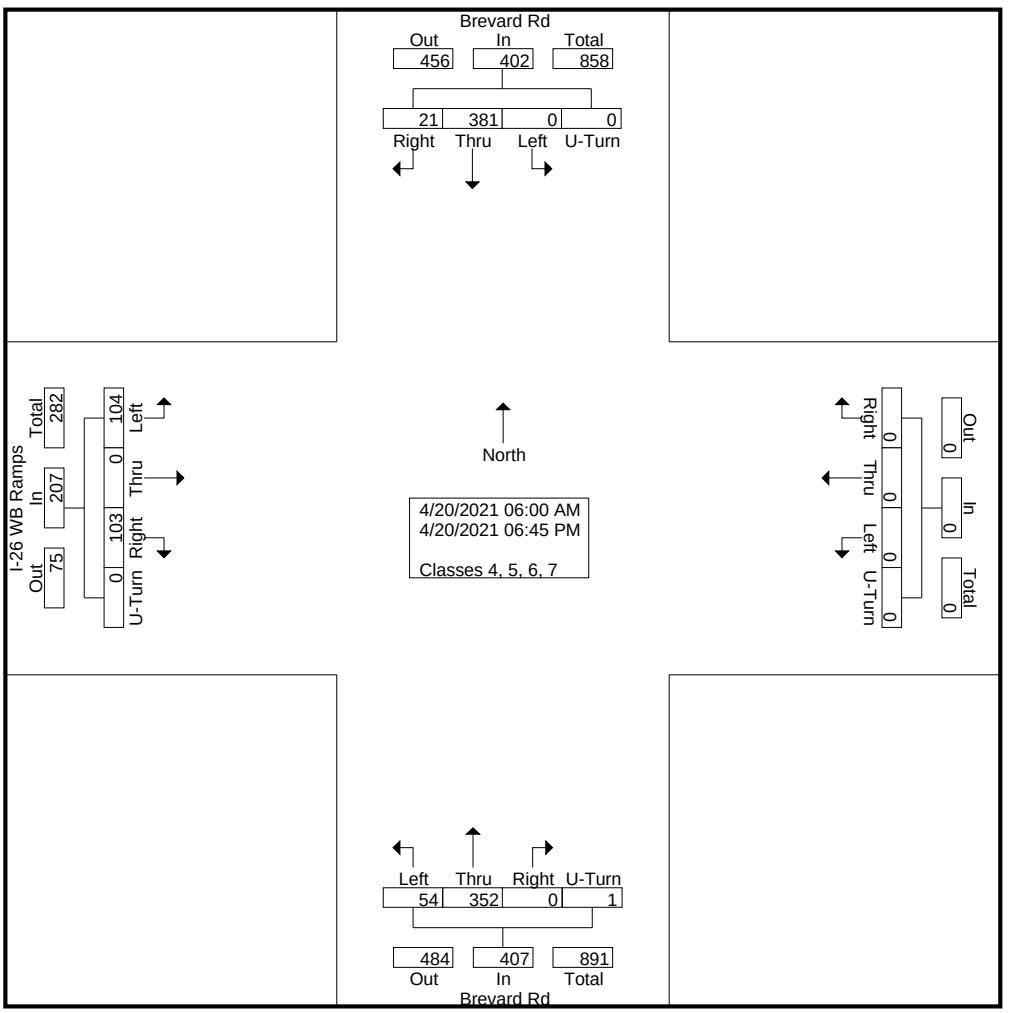

DocuSign Envelope ID: 5C03745C-4B01-4834-A65D-B77F558A4F46

Quality Counts

920 Blairhill Rd, Ste B-106
Charlotte, NC 28217

File Name : 15411701 - Brevard Rd -- I-26 WB Ramps
Site Code : 15411701
Start Date : 4/20/2021
Page No : 3

	Brevard Rd Southbound					Westbound					Brevard Rd Northbound					I-26 WB Ramps Eastbound					
Start Time	Left	Thru	Right	U-Turn	App. Total	Left	Thru	Right	U-Turn	App. Total	Left	Thru	Right	U-Turn	App. Total	Left	Thru	Right	U-Turn	App. Total	Int. Total
Peak Hour Analysis From 06:00 AM to 11:45 AM - Peak 1 of 1																					
Peak Hour for Entire Intersection Begins at 10:00 AM																					
10:00 AM	0	9	**1**	0	10	0	0	0	0	0	**2**	**14**	0	0	**16**	4	0	2	0	6	32
10:15 AM	0	**17**	1	0	**18**	0	0	0	0	0	1	11	0	0	12	**5**	0	3	0	**8**	**38**
10:30 AM	0	9	0	0	9	0	0	0	0	0	2	6	0	0	8	3	0	4	0	7	24
10:45 AM	0	12	0	0	12	0	0	0	0	0	2	9	0	0	11	3	0	**5**	0	8	31
Total Volume	0	47	2	0	49	0	0	0	0	0	7	40	0	0	47	15	0	14	0	29	125
% App. Total	0	95.9	4.1	0		0	0	0	0		14.9	85.1	0	0		51.7	0	48.3	0		
PHF	.000	.691	.500	.000	.681	.000	.000	.000	.000	.000	.875	.714	.000	.000	.734	.750	.000	.700	.000	.906	.822

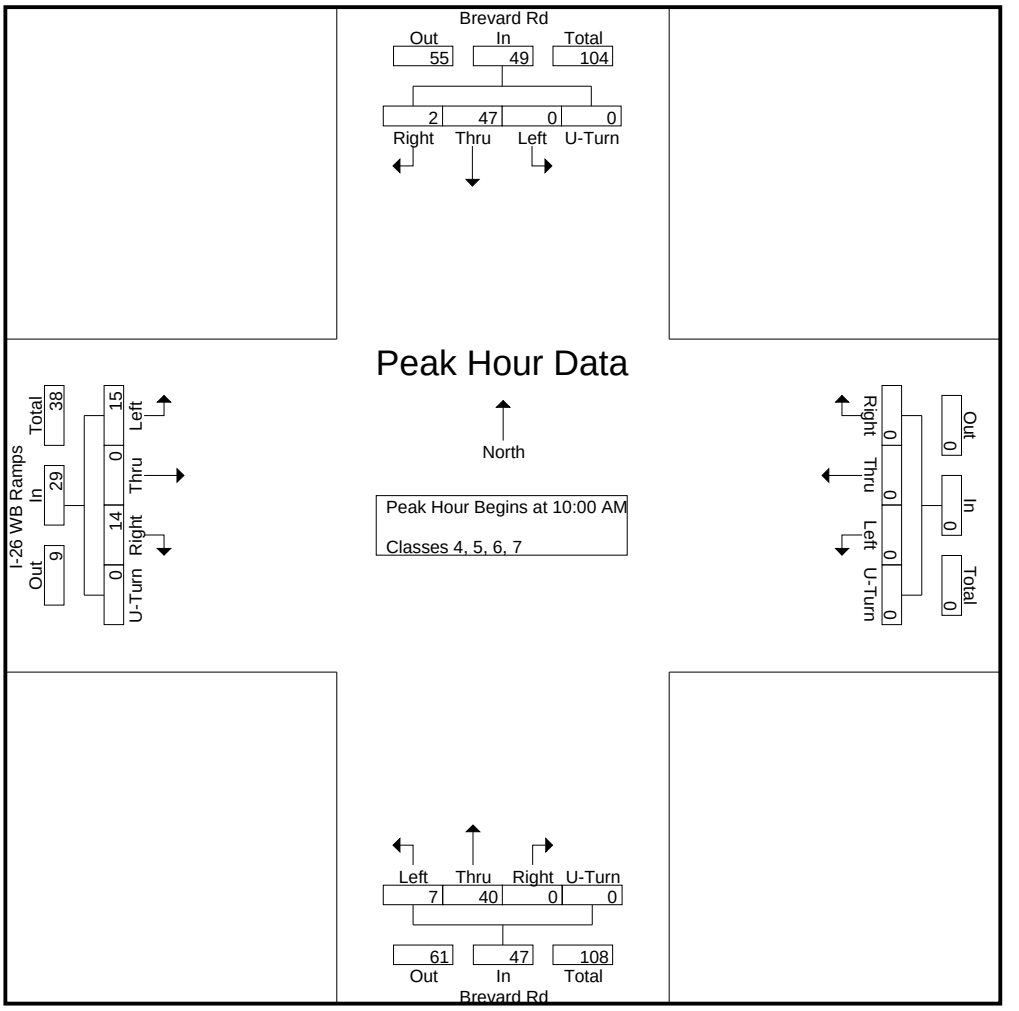

DocuSign Envelope ID: 5C03745C-4B01-4834-A65D-B77F558A4F46

Quality Counts

920 Blairhill Rd, Ste B-106
Charlotte, NC 28217

File Name : 15411701 - Brevard Rd -- I-26 WB Ramps
Site Code : 15411701
Start Date : 4/20/2021
Page No : 4

	Brevard Rd Southbound					Westbound					Brevard Rd Northbound					I-26 WB Ramps Eastbound					
Start Time	Left	Thru	Right	U-Turn	App. Total	Left	Thru	Right	U-Turn	App. Total	Left	Thru	Right	U-Turn	App. Total	Left	Thru	Right	U-Turn	App. Total	Int. Total
Peak Hour Analysis From 12:00 PM to 06:45 PM - Peak 1 of 1																					
Peak Hour for Entire Intersection Begins at 01:00 PM																					
01:00 PM	0	**12**	0	0	**12**	0	0	0	0	0	1	**8**	0	0	9	2	0	**4**	0	6	**27**
01:15 PM	0	6	**2**	0	8	0	0	0	0	0	0	8	0	0	8	2	0	3	0	5	21
01:30 PM	0	11	0	0	11	0	0	0	0	0	**3**	7	0	0	**10**	3	0	2	0	5	26
01:45 PM	0	9	1	0	10	0	0	0	0	0	0	7	0	0	7	**4**	0	4	0	**8**	25
Total Volume	0	38	3	0	41	0	0	0	0	0	4	30	0	0	34	11	0	13	0	24	99
% App. Total	0	92.7	7.3	0		0	0	0	0		11.8	88.2	0	0		45.8	0	54.2	0		
PHF	.000	.792	.375	.000	.854	.000	.000	.000	.000	.000	.333	.938	.000	.000	.850	.688	.000	.813	.000	.750	.917

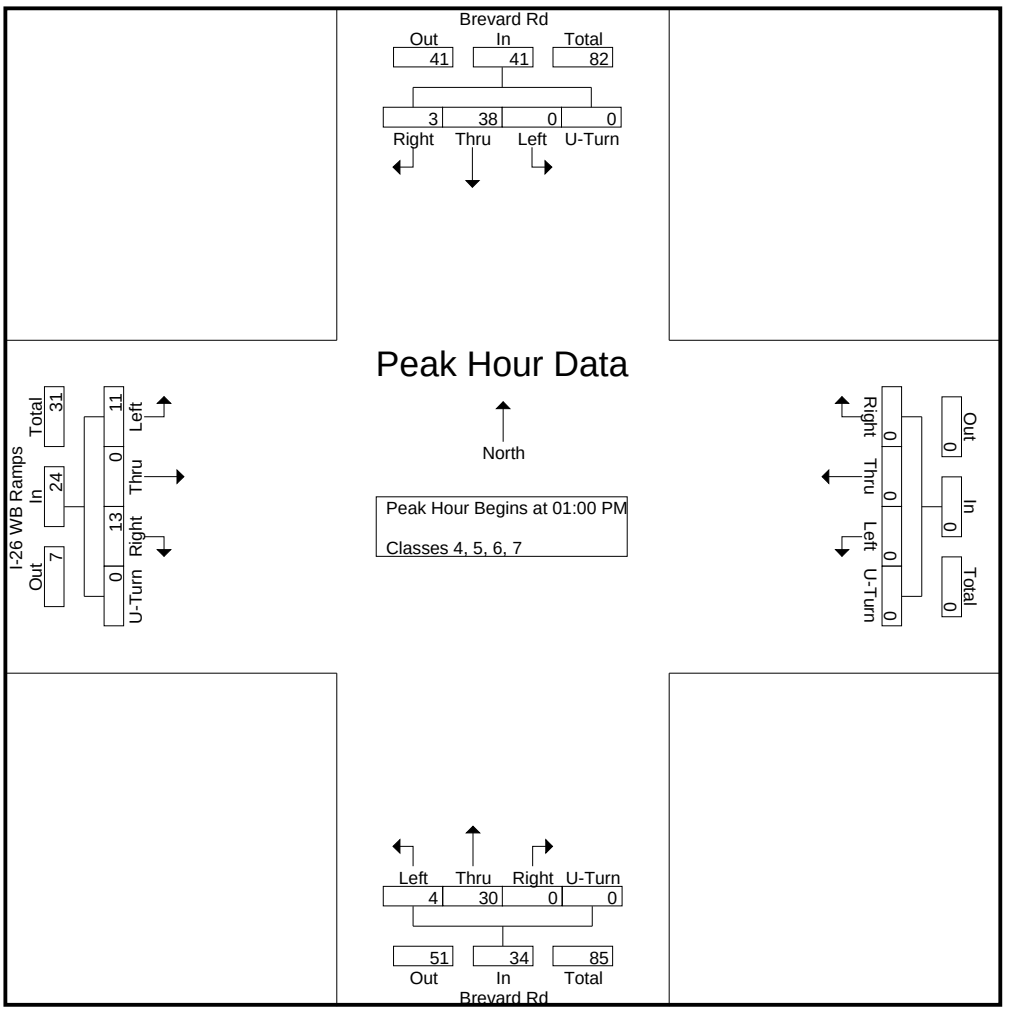

DocuSign Envelope ID: 5C03745C-4B01-4834-A65D-B77F558A4F46

Quality Counts

920 Blairhill Rd, Ste B-106
Charlotte, NC 28217

File Name : 15411701 - Brevard Rd -- I-26 WB Ramps
Site Code : 15411701
Start Date : 4/20/2021
Page No : 1

Groups Printed- Classes 8, 9, 10

	Brevard Rd Southbound					Westbound					Brevard Rd Northbound					I-26 WB Ramps Eastbound					
Start Time	Left	Thru	Right	U-Turn	App. Total	Left	Thru	Right	U-Turn	App. Total	Left	Thru	Right	U-Turn	App. Total	Left	Thru	Right	U-Turn	App. Total	Int. Total
06:00 AM	0	0	0	0	0	0	0	0	0	0	0	1	0	0	1	1	0	0	0	1	2
06:15 AM	0	1	0	0	1	0	0	0	0	0	0	0	0	0	0	0	0	1	0	1	2
06:30 AM	0	2	0	0	2	0	0	0	0	0	0	0	0	0	0	1	0	2	0	3	5
06:45 AM	0	1	0	0	1	0	0	0	0	0	1	1	0	0	2	2	0	2	0	4	7
Total	0	4	0	0	4	0	0	0	0	0	1	2	0	0	3	4	0	5	0	9	16
07:00 AM	0	1	0	0	1	0	0	0	0	0	1	1	0	0	2	0	0	1	0	1	4
07:15 AM	0	0	0	0	0	0	0	0	0	0	1	1	0	0	2	1	0	1	0	2	4
07:30 AM	0	3	0	0	3	0	0	0	0	0	1	1	0	0	2	1	0	1	0	2	7
07:45 AM	0	2	0	0	2	0	0	0	0	0	1	3	0	0	4	0	0	4	0	4	10
Total	0	6	0	0	6	0	0	0	0	0	4	6	0	0	10	2	0	7	0	9	25
08:00 AM	0	1	0	0	1	0	0	0	0	0	2	3	0	0	5	1	0	1	0	2	8
08:15 AM	0	3	0	0	3	0	0	0	0	0	2	2	0	0	4	0	0	3	0	3	10
08:30 AM	0	3	0	0	3	0	0	0	0	0	0	1	0	0	1	4	0	2	0	6	10
08:45 AM	0	4	0	0	4	0	0	0	0	0	0	1	0	0	1	2	0	3	0	5	10
Total	0	11	0	0	11	0	0	0	0	0	4	7	0	0	11	7	0	9	0	16	38
09:00 AM	0	5	0	0	5	0	0	0	0	0	0	1	0	0	1	1	0	3	0	4	10
09:15 AM	0	6	0	0	6	0	0	0	0	0	2	5	0	0	7	0	0	1	0	1	14
09:30 AM	0	5	0	0	5	0	0	0	0	0	2	3	0	0	5	0	0	2	0	2	12
09:45 AM	0	6	0	0	6	0	0	0	0	0	0	4	0	0	4	3	0	1	0	4	14
Total	0	22	0	0	22	0	0	0	0	0	4	13	0	0	17	4	0	7	0	11	50
10:00 AM	0	3	0	0	3	0	0	0	0	0	2	0	0	0	2	2	0	3	0	5	10
10:15 AM	0	2	0	0	2	0	0	0	0	0	0	2	0	0	2	1	0	1	0	2	6
10:30 AM	0	3	1	0	4	0	0	0	0	0	0	1	0	0	1	2	0	0	0	2	7
10:45 AM	0	4	0	0	4	0	0	0	0	0	0	0	0	0	0	2	0	3	0	5	9
Total	0	12	1	0	13	0	0	0	0	0	2	3	0	0	5	7	0	7	0	14	32
11:00 AM	0	0	0	0	0	0	0	0	0	0	1	1	0	0	2	1	0	1	0	2	4
11:15 AM	0	3	0	0	3	0	0	0	0	0	0	0	0	0	0	0	0	2	0	2	5
11:30 AM	0	1	0	0	1	0	0	0	0	0	0	3	0	0	3	2	0	0	0	2	6
11:45 AM	0	3	0	0	3	0	0	0	0	0	0	2	0	0	2	2	0	1	0	3	8
Total	0	7	0	0	7	0	0	0	0	0	1	6	0	0	7	5	0	4	0	9	23
12:00 PM	0	2	0	0	2	0	0	0	0	0	0	4	0	0	4	2	0	4	0	6	12
12:15 PM	0	2	1	0	3	0	0	0	0	0	2	6	0	0	8	0	0	1	0	1	12
12:30 PM	0	4	0	0	4	0	0	0	0	0	2	0	0	0	2	0	0	2	0	2	8
12:45 PM	0	4	0	0	4	0	0	0	0	0	0	3	0	0	3	2	0	1	0	3	10
Total	0	12	1	0	13	0	0	0	0	0	4	13	0	0	17	4	0	8	0	12	42
01:00 PM	0	4	0	0	4	0	0	0	0	0	1	1	0	0	2	0	0	6	0	6	12
01:15 PM	0	0	0	0	0	0	0	0	0	0	1	2	0	0	3	2	0	7	0	9	12
01:30 PM	0	2	0	0	2	0	0	0	0	0	1	3	0	0	4	0	0	0	0	0	6
01:45 PM	0	1	0	0	1	0	0	0	0	0	0	0	0	0	0	1	0	0	0	1	2
Total	0	7	0	0	7	0	0	0	0	0	3	6	0	0	9	3	0	13	0	16	32
02:00 PM	0	2	0	0	2	0	0	0	0	0	0	1	0	0	1	0	0	2	0	2	5
02:15 PM	0	2	0	0	2	0	0	0	0	0	0	1	0	0	1	1	0	3	0	4	7
02:30 PM	0	2	0	0	2	0	0	0	0	0	0	1	0	0	1	0	0	3	0	3	6
02:45 PM	0	1	0	0	1	0	0	0	0	0	0	1	0	0	1	0	0	1	0	1	3
Total	0	7	0	0	7	0	0	0	0	0	0	4	0	0	4	1	0	9	0	10	21
03:00 PM	0	3	0	0	3	0	0	0	0	0	2	2	0	0	4	1	0	1	0	2	9
03:15 PM	0	5	0	0	5	0	0	0	0	0	0	3	0	0	3	1	0	1	0	2	10
03:30 PM	0	0	0	0	0	0	0	0	0	0	0	2	0	0	2	0	0	2	0	2	4

DocuSign Envelope ID: 5C03745C-4B01-4834-A65D-B77F558A4F46

Quality Counts

920 Blairhill Rd, Ste B-106
Charlotte, NC 28217

File Name : 15411701 - Brevard Rd -- I-26 WB Ramps
Site Code : 15411701
Start Date : 4/20/2021
Page No : 2

Groups Printed- Classes 8, 9, 10

	Brevard Rd Southbound					Westbound					Brevard Rd Northbound					I-26 WB Ramps Eastbound					
Start Time	Left	Thru	Right	U-Turn	App. Total	Left	Thru	Right	U-Turn	App. Total	Left	Thru	Right	U-Turn	App. Total	Left	Thru	Right	U-Turn	App. Total	Int. Total
03:45 PM	0	1	0	0	1	0	0	0	0	0	0	1	0	0	1	0	0	1	0	1	3
Total	0	9	0	0	9	0	0	0	0	0	2	8	0	0	10	2	0	5	0	7	26
04:00 PM	0	2	0	0	2	0	0	0	0	0	0	3	0	0	3	0	0	1	0	1	6
04:15 PM	0	1	0	0	1	0	0	0	0	0	0	3	0	0	3	1	0	0	0	1	5
04:30 PM	0	4	1	0	5	0	0	0	0	0	0	1	0	0	1	0	0	1	0	1	7
04:45 PM	0	1	0	0	1	0	0	0	0	0	0	2	0	0	2	1	0	3	0	4	7
Total	0	8	1	0	9	0	0	0	0	0	0	9	0	0	9	2	0	5	0	7	25
05:00 PM	0	0	0	0	0	0	0	0	0	0	0	0	0	0	0	1	0	1	0	2	2
05:15 PM	0	1	0	0	1	0	0	0	0	0	0	2	0	0	2	0	0	0	0	0	3
05:30 PM	0	2	0	0	2	0	0	0	0	0	2	2	0	0	4	3	0	1	0	4	10
05:45 PM	0	0	0	0	0	0	0	0	0	0	0	1	0	0	1	1	0	1	0	2	3
Total	0	3	0	0	3	0	0	0	0	0	2	5	0	0	7	5	0	3	0	8	18
06:00 PM	0	0	0	0	0	0	0	0	0	0	0	0	0	0	0	0	0	1	0	1	1
06:15 PM	0	2	0	0	2	0	0	0	0	0	0	1	0	0	1	0	0	0	0	0	3
06:30 PM	0	1	0	0	1	0	0	0	0	0	0	0	0	0	0	0	0	0	0	0	1
06:45 PM	0	0	1	0	1	0	0	0	0	0	0	1	0	0	1	0	0	1	0	1	3
Total	0	3	1	0	4	0	0	0	0	0	0	2	0	0	2	0	0	2	0	2	8
Grand Total	0	111	4	0	115	0	0	0	0	0	27	84	0	0	111	46	0	84	0	130	356
Apprch %	0	96.5	3.5	0		0	0	0	0		24.3	75.7	0	0		35.4	0	64.6	0		
Total %	0	31.2	1.1	0	32.3	0	0	0	0	0	7.6	23.6	0	0	31.2	12.9	0	23.6	0	36.5	

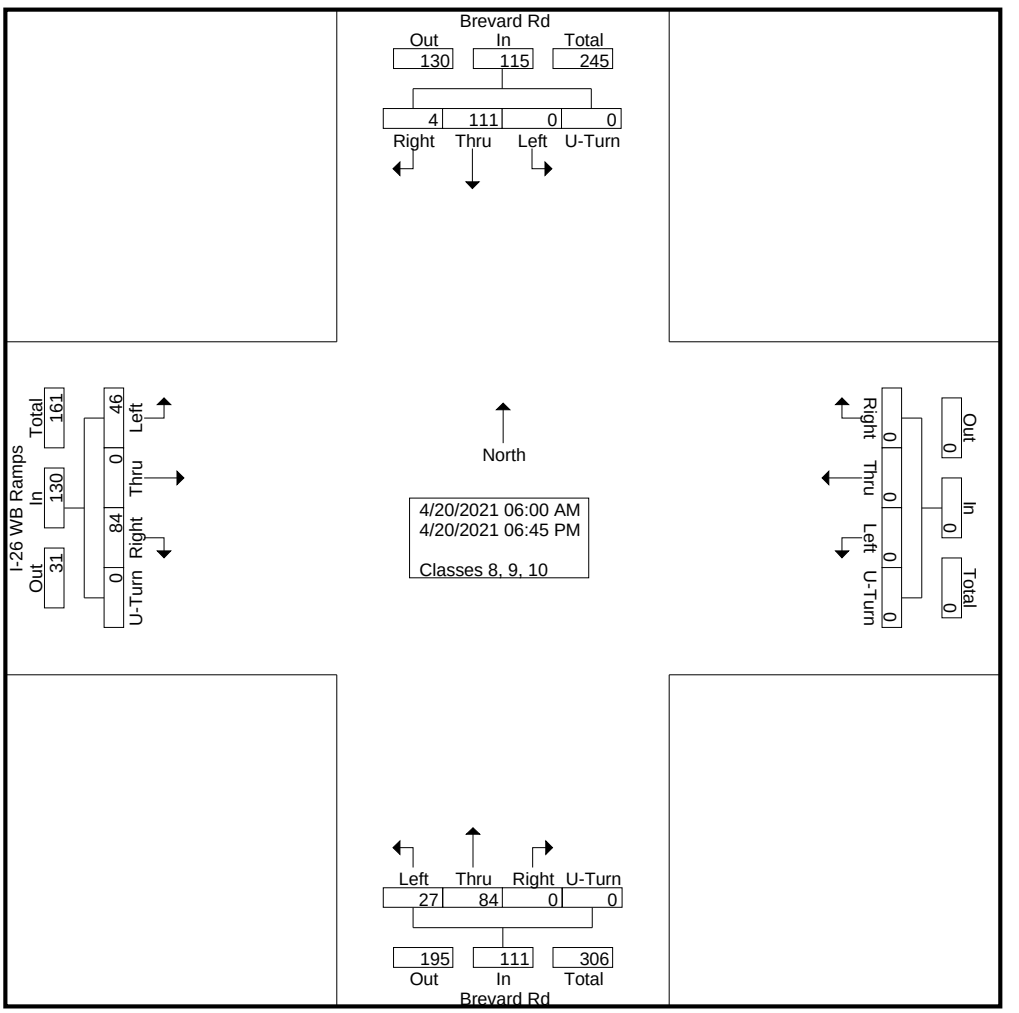

DocuSign Envelope ID: 5C03745C-4B01-4834-A65D-B77F558A4F46

Quality Counts

920 Blairhill Rd, Ste B-106
Charlotte, NC 28217

File Name : 15411701 - Brevard Rd -- I-26 WB Ramps
Site Code : 15411701
Start Date : 4/20/2021
Page No : 3

	Brevard Rd Southbound					Westbound					Brevard Rd Northbound					I-26 WB Ramps Eastbound					
Start Time	Left	Thru	Right	U-Turn	App. Total	Left	Thru	Right	U-Turn	App. Total	Left	Thru	Right	U-Turn	App. Total	Left	Thru	Right	U-Turn	App. Total	Int. Total
Peak Hour Analysis From 06:00 AM to 11:45 AM - Peak 1 of 1																					
Peak Hour for Entire Intersection Begins at 09:00 AM																					
09:00 AM	0	5	0	0	5	0	0	0	0	0	0	1	0	0	1	1	0	**3**	0	**4**	10
09:15 AM	0	**6**	0	0	**6**	0	0	0	0	0	**2**	**5**	0	0	**7**	0	0	1	0	1	**14**
09:30 AM	0	5	0	0	5	0	0	0	0	0	2	3	0	0	5	0	0	2	0	2	12
09:45 AM	0	6	0	0	6	0	0	0	0	0	0	4	0	0	4	**3**	0	1	0	4	14
Total Volume	0	22	0	0	22	0	0	0	0	0	4	13	0	0	17	4	0	7	0	11	50
% App. Total	0	100	0	0		0	0	0	0		23.5	76.5	0	0		36.4	0	63.6	0		
PHF	.000	.917	.000	.000	.917	.000	.000	.000	.000	.000	.500	.650	.000	.000	.607	.333	.000	.583	.000	.688	.893

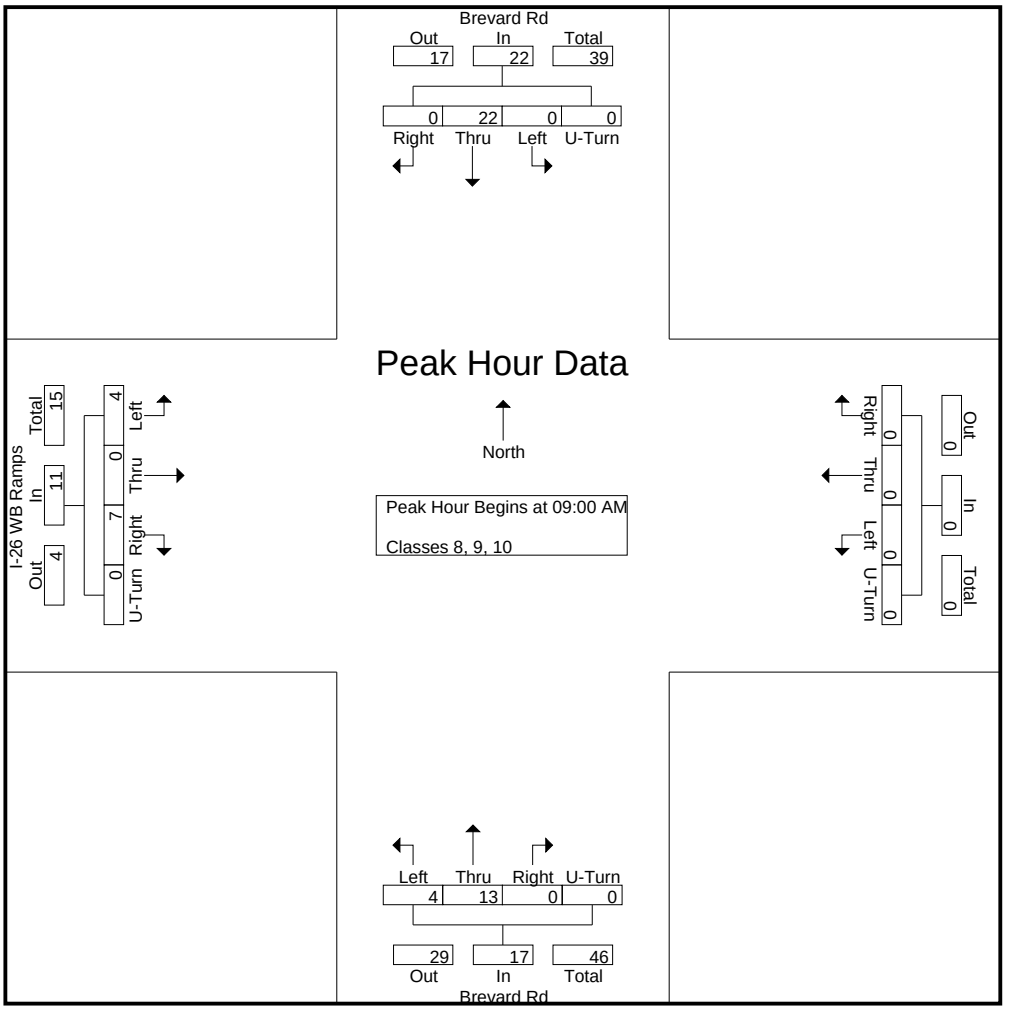

DocuSign Envelope ID: 5C03745C-4B01-4834-A65D-B77F558A4F46

Quality Counts

920 Blairhill Rd, Ste B-106
Charlotte, NC 28217

File Name : 15411701 - Brevard Rd -- I-26 WB Ramps
Site Code : 15411701
Start Date : 4/20/2021
Page No : 4

	Brevard Rd Southbound					Westbound					Brevard Rd Northbound					I-26 WB Ramps Eastbound					
Start Time	Left	Thru	Right	U-Turn	App. Total	Left	Thru	Right	U-Turn	App. Total	Left	Thru	Right	U-Turn	App. Total	Left	Thru	Right	U-Turn	App. Total	Int. Total
Peak Hour Analysis From 12:00 PM to 06:45 PM - Peak 1 of 1																					
Peak Hour for Entire Intersection Begins at 12:00 PM																					
12:00 PM	0	2	0	0	2	0	0	0	0	0	0	4	0	0	4	**2**	0	**4**	0	**6**	**12**
12:15 PM	0	2	**1**	0	3	0	0	0	0	0	**2**	**6**	0	0	**8**	0	0	1	0	1	12
12:30 PM	0	**4**	0	0	**4**	0	0	0	0	0	2	0	0	0	2	0	0	2	0	2	8
12:45 PM	0	4	0	0	4	0	0	0	0	0	0	3	0	0	3	2	0	1	0	3	10
Total Volume	0	12	1	0	13	0	0	0	0	0	4	13	0	0	17	4	0	8	0	12	42
% App. Total	0	92.3	7.7	0		0	0	0	0		23.5	76.5	0	0		33.3	0	66.7	0		
PHF	.000	.750	.250	.000	.813	.000	.000	.000	.000	.000	.500	.542	.000	.000	.531	.500	.000	.500	.000	.500	.875

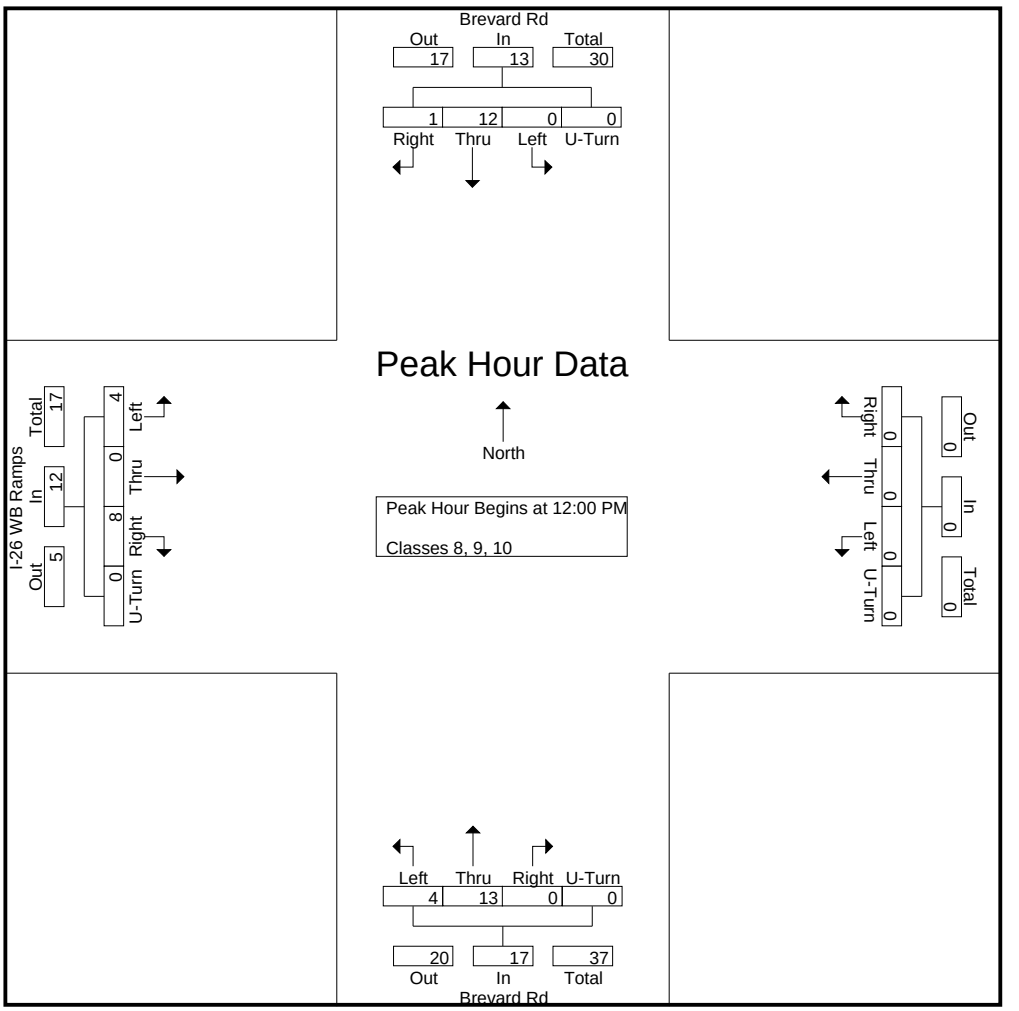

DocuSign Envelope ID: 5C03745C-4B01-4834-A65D-B77F558A4F46

Quality Counts

920 Blairhill Rd, Ste B-106
Charlotte, NC 28217

File Name : 15411701 - Brevard Rd -- I-26 WB Ramps
Site Code : 15411701
Start Date : 4/20/2021
Page No : 1

Groups Printed- Classes 11, 12, 13

	Brevard Rd Southbound					Westbound					Brevard Rd Northbound					I-26 WB Ramps Eastbound					
Start Time	Left	Thru	Right	U-Turn	App. Total	Left	Thru	Right	U-Turn	App. Total	Left	Thru	Right	U-Turn	App. Total	Left	Thru	Right	U-Turn	App. Total	Int. Total
06:00 AM	0	0	0	0	0	0	0	0	0	0	0	0	0	0	0	0	0	0	0	0	0
06:15 AM	0	0	0	0	0	0	0	0	0	0	0	0	0	0	0	0	0	0	0	0	0
06:30 AM	0	0	0	0	0	0	0	0	0	0	0	0	0	0	0	0	0	0	0	0	0
06:45 AM	0	0	0	0	0	0	0	0	0	0	0	0	0	0	0	0	0	0	0	0	0
Total	0	0	0	0	0	0	0	0	0	0	0	0	0	0	0	0	0	0	0	0	0
07:00 AM	0	0	0	0	0	0	0	0	0	0	0	0	0	0	0	0	0	0	0	0	0
07:15 AM	0	0	0	0	0	0	0	0	0	0	0	0	0	0	0	0	0	0	0	0	0
07:30 AM	0	0	0	0	0	0	0	0	0	0	0	0	0	0	0	0	0	0	0	0	0
07:45 AM	0	0	0	0	0	0	0	0	0	0	0	0	0	0	0	0	0	0	0	0	0
Total	0	0	0	0	0	0	0	0	0	0	0	0	0	0	0	0	0	0	0	0	0
08:00 AM	0	0	0	0	0	0	0	0	0	0	0	0	0	0	0	0	0	0	0	0	0
08:15 AM	0	0	0	0	0	0	0	0	0	0	0	0	0	0	0	0	0	0	0	0	0
08:30 AM	0	0	0	0	0	0	0	0	0	0	0	0	0	0	0	0	0	0	0	0	0
08:45 AM	0	0	0	0	0	0	0	0	0	0	0	0	0	0	0	0	0	0	0	0	0
Total	0	0	0	0	0	0	0	0	0	0	0	0	0	0	0	0	0	0	0	0	0
09:00 AM	0	0	0	0	0	0	0	0	0	0	0	0	0	0	0	0	0	0	0	0	0
09:15 AM	0	0	0	0	0	0	0	0	0	0	0	0	0	0	0	0	0	0	0	0	0
09:30 AM	0	0	0	0	0	0	0	0	0	0	0	0	0	0	0	0	0	0	0	0	0
09:45 AM	0	0	0	0	0	0	0	0	0	0	0	0	0	0	0	0	0	0	0	0	0
Total	0	0	0	0	0	0	0	0	0	0	0	0	0	0	0	0	0	0	0	0	0
10:00 AM	0	0	0	0	0	0	0	0	0	0	0	0	0	0	0	0	0	0	0	0	0
10:15 AM	0	0	0	0	0	0	0	0	0	0	0	0	0	0	0	0	0	0	0	0	0
10:30 AM	0	0	0	0	0	0	0	0	0	0	0	0	0	0	0	0	0	0	0	0	0
10:45 AM	0	0	0	0	0	0	0	0	0	0	0	0	0	0	0	0	0	0	0	0	0
Total	0	0	0	0	0	0	0	0	0	0	0	0	0	0	0	0	0	0	0	0	0
11:00 AM	0	0	0	0	0	0	0	0	0	0	0	0	0	0	0	0	0	0	0	0	0
11:15 AM	0	0	0	0	0	0	0	0	0	0	0	0	0	0	0	0	0	0	0	0	0
11:30 AM	0	0	0	0	0	0	0	0	0	0	0	0	0	0	0	0	0	0	0	0	0
11:45 AM	0	0	0	0	0	0	0	0	0	0	0	0	0	0	0	0	0	0	0	0	0
Total	0	0	0	0	0	0	0	0	0	0	0	0	0	0	0	0	0	0	0	0	0
12:00 PM	0	0	0	0	0	0	0	0	0	0	0	0	0	0	0	0	0	0	0	0	0
12:15 PM	0	0	0	0	0	0	0	0	0	0	0	0	0	0	0	0	0	0	0	0	0
12:30 PM	0	0	0	0	0	0	0	0	0	0	0	0	0	0	0	0	0	0	0	0	0
12:45 PM	0	0	0	0	0	0	0	0	0	0	0	0	0	0	0	0	0	0	0	0	0
Total	0	0	0	0	0	0	0	0	0	0	0	0	0	0	0	0	0	0	0	0	0
01:00 PM	0	0	0	0	0	0	0	0	0	0	0	0	0	0	0	0	0	0	0	0	0
01:15 PM	0	0	0	0	0	0	0	0	0	0	0	0	0	0	0	0	0	0	0	0	0
01:30 PM	0	0	0	0	0	0	0	0	0	0	0	0	0	0	0	0	0	0	0	0	0
01:45 PM	0	0	0	0	0	0	0	0	0	0	0	0	0	0	0	0	0	0	0	0	0
Total	0	0	0	0	0	0	0	0	0	0	0	0	0	0	0	0	0	0	0	0	0
02:00 PM	0	0	0	0	0	0	0	0	0	0	0	0	0	0	0	0	0	0	0	0	0
02:15 PM	0	0	0	0	0	0	0	0	0	0	0	0	0	0	0	0	0	0	0	0	0
02:30 PM	0	0	0	0	0	0	0	0	0	0	0	0	0	0	0	0	0	0	0	0	0
02:45 PM	0	0	0	0	0	0	0	0	0	0	0	0	0	0	0	0	0	0	0	0	0
Total	0	0	0	0	0	0	0	0	0	0	0	0	0	0	0	0	0	0	0	0	0
03:00 PM	0	0	0	0	0	0	0	0	0	0	0	0	0	0	0	0	0	0	0	0	0
03:15 PM	0	0	0	0	0	0	0	0	0	0	0	0	0	0	0	0	0	0	0	0	0
03:30 PM	0	0	0	0	0	0	0	0	0	0	0	0	0	0	0	0	0	0	0	0	0

DocuSign Envelope ID: 5C03745C-4B01-4834-A65D-B77F558A4F46

Quality Counts

920 Blairhill Rd, Ste B-106
Charlotte, NC 28217

File Name : 15411701 - Brevard Rd -- I-26 WB Ramps
Site Code : 15411701
Start Date : 4/20/2021
Page No : 2

Groups Printed- Classes 11, 12, 13

	Brevard Rd Southbound					Westbound					Brevard Rd Northbound					I-26 WB Ramps Eastbound					
Start Time	Left	Thru	Right	U-Turn	App. Total	Left	Thru	Right	U-Turn	App. Total	Left	Thru	Right	U-Turn	App. Total	Left	Thru	Right	U-Turn	App. Total	Int. Total
03:45 PM	0	0	0	0	0	0	0	0	0	0	0	0	0	0	0	0	0	0	0	0	0
Total	0	0	0	0	0	0	0	0	0	0	0	0	0	0	0	0	0	0	0	0	0
04:00 PM	0	0	0	0	0	0	0	0	0	0	0	0	0	0	0	0	0	0	0	0	0
04:15 PM	0	0	0	0	0	0	0	0	0	0	0	0	0	0	0	0	0	0	0	0	0
04:30 PM	0	0	0	0	0	0	0	0	0	0	0	0	0	0	0	0	0	0	0	0	0
04:45 PM	0	0	0	0	0	0	0	0	0	0	0	0	0	0	0	0	0	0	0	0	0
Total	0	0	0	0	0	0	0	0	0	0	0	0	0	0	0	0	0	0	0	0	0
05:00 PM	0	0	0	0	0	0	0	0	0	0	0	0	0	0	0	0	0	0	0	0	0
05:15 PM	0	0	0	0	0	0	0	0	0	0	0	0	0	0	0	0	0	0	0	0	0
05:30 PM	0	0	0	0	0	0	0	0	0	0	0	0	0	0	0	0	0	0	0	0	0
05:45 PM	0	0	0	0	0	0	0	0	0	0	0	0	0	0	0	0	0	0	0	0	0
Total	0	0	0	0	0	0	0	0	0	0	0	0	0	0	0	0	0	0	0	0	0
06:00 PM	0	0	0	0	0	0	0	0	0	0	0	0	0	0	0	0	0	0	0	0	0
06:15 PM	0	0	0	0	0	0	0	0	0	0	0	0	0	0	0	0	0	0	0	0	0
06:30 PM	0	0	0	0	0	0	0	0	0	0	0	0	0	0	0	0	0	0	0	0	0
06:45 PM	0	0	0	0	0	0	0	0	0	0	0	0	0	0	0	0	0	0	0	0	0
Total	0	0	0	0	0	0	0	0	0	0	0	0	0	0	0	0	0	0	0	0	0
Grand Total	0	0	0	0	0	0	0	0	0	0	0	0	0	0	0	0	0	0	0	0	0
Apprch %	0	0	0	0		0	0	0	0		0	0	0	0		0	0	0	0		
Total %																					

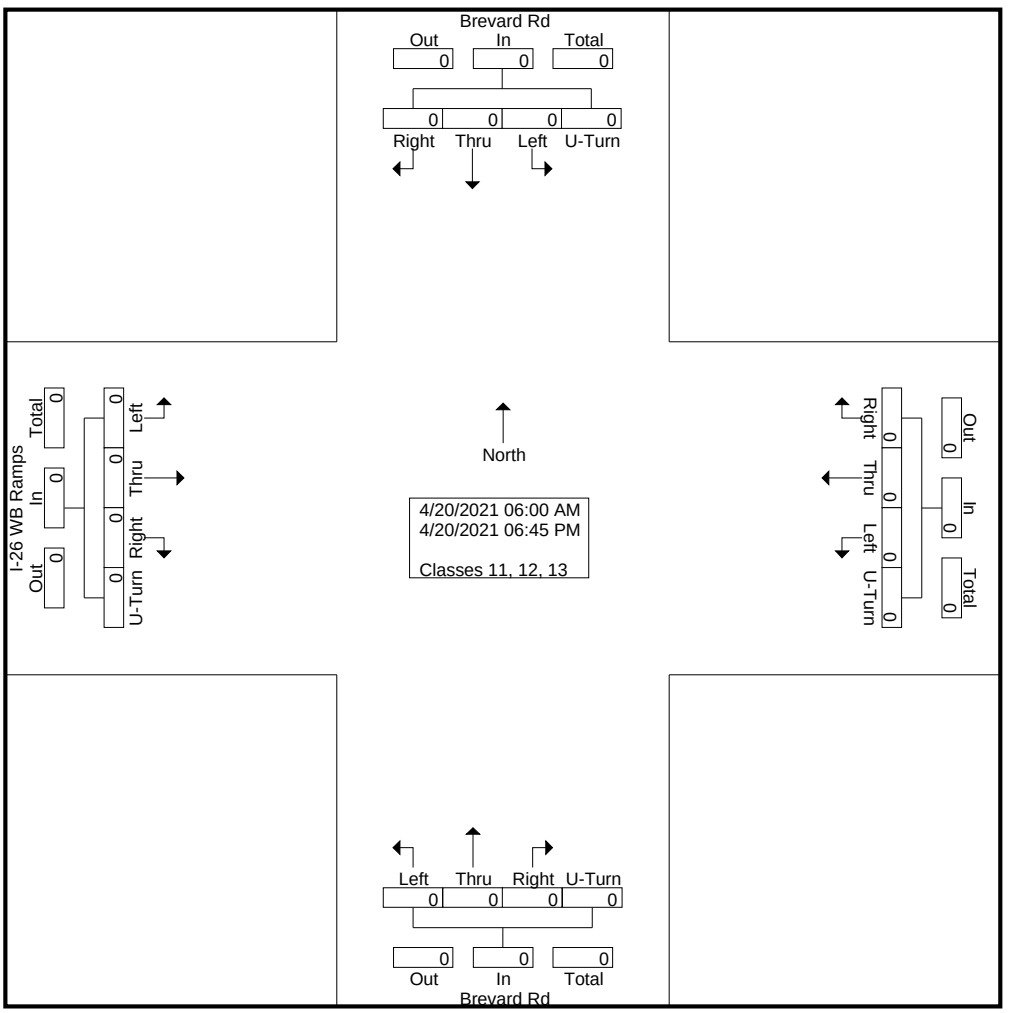

DocuSign Envelope ID: 5C03745C-4B01-4834-A65D-B77F558A4F46

Quality Counts

920 Blairhill Rd, Ste B-106
Charlotte, NC 28217

File Name : 15411701 - Brevard Rd -- I-26 WB Ramps
Site Code : 15411701
Start Date : 4/20/2021
Page No : 3

	Brevard Rd Southbound					Westbound					Brevard Rd Northbound					I-26 WB Ramps Eastbound					
Start Time	Left	Thru	Right	U-Turn	App. Total	Left	Thru	Right	U-Turn	App. Total	Left	Thru	Right	U-Turn	App. Total	Left	Thru	Right	U-Turn	App. Total	Int. Total
Peak Hour Analysis From 06:00 AM to 11:45 AM - Peak 1 of 1																					
Peak Hour for Entire Intersection Begins at 06:00 AM																					
06:00 AM	0	0	0	0	0	0	0	0	0	0	0	0	0	0	0	0	0	0	0	0	0
06:15 AM	0	0	0	0	0	0	0	0	0	0	0	0	0	0	0	0	0	0	0	0	0
06:30 AM	0	0	0	0	0	0	0	0	0	0	0	0	0	0	0	0	0	0	0	0	0
06:45 AM	0	0	0	0	0	0	0	0	0	0	0	0	0	0	0	0	0	0	0	0	0
Total Volume	0	0	0	0	0	0	0	0	0	0	0	0	0	0	0	0	0	0	0	0	0
% App. Total	0	0	0	0		0	0	0	0		0	0	0	0		0	0	0	0		
PHF	.000	.000	.000	.000	.000	.000	.000	.000	.000	.000	.000	.000	.000	.000	.000	.000	.000	.000	.000	.000	.000

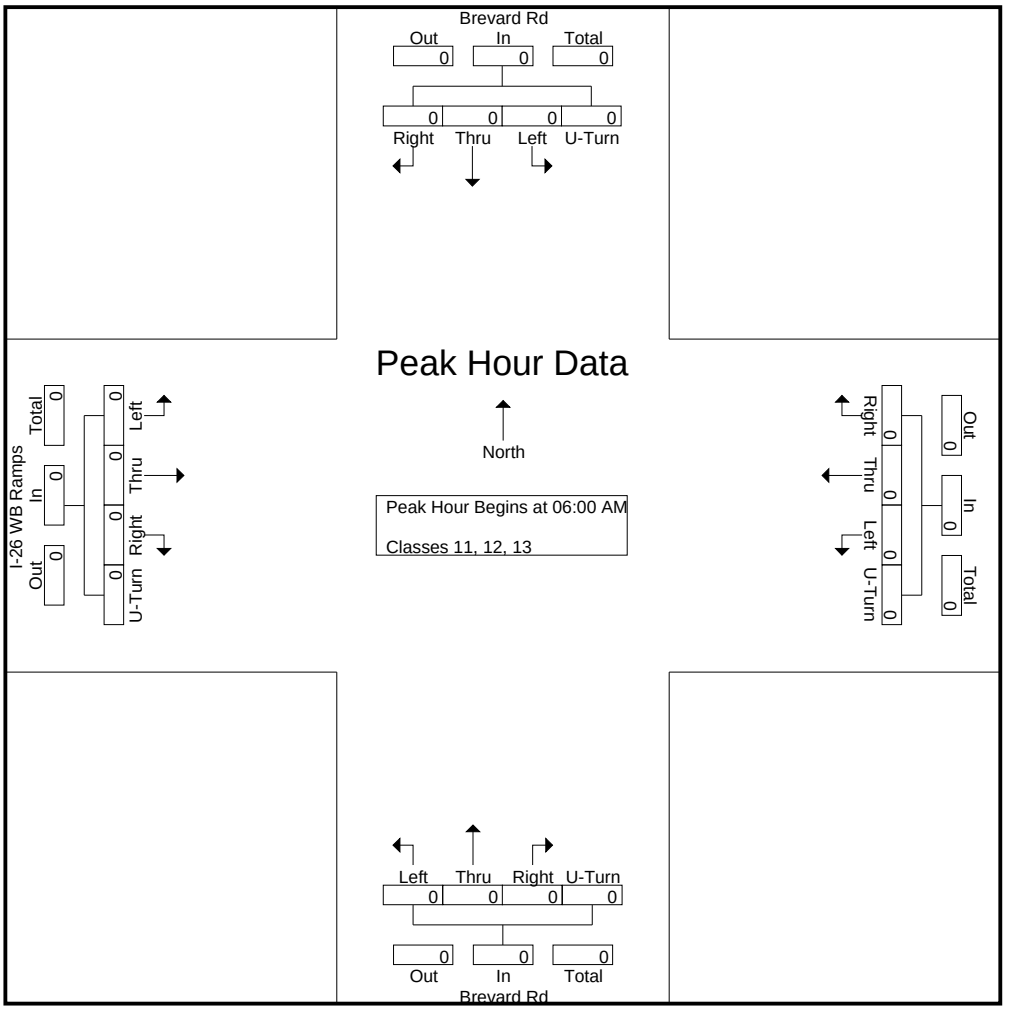

DocuSign Envelope ID: 5C03745C-4B01-4834-A65D-B77F558A4F46

Quality Counts

920 Blairhill Rd, Ste B-106
Charlotte, NC 28217

File Name : 15411701 - Brevard Rd -- I-26 WB Ramps
Site Code : 15411701
Start Date : 4/20/2021
Page No : 4

	Brevard Rd Southbound					Westbound					Brevard Rd Northbound					I-26 WB Ramps Eastbound					
Start Time	Left	Thru	Right	U-Turn	App. Total	Left	Thru	Right	U-Turn	App. Total	Left	Thru	Right	U-Turn	App. Total	Left	Thru	Right	U-Turn	App. Total	Int. Total
Peak Hour Analysis From 12:00 PM to 06:45 PM - Peak 1 of 1																					
Peak Hour for Entire Intersection Begins at 12:00 PM																					
12:00 PM	0	0	0	0	0	0	0	0	0	0	0	0	0	0	0	0	0	0	0	0	0
12:15 PM	0	0	0	0	0	0	0	0	0	0	0	0	0	0	0	0	0	0	0	0	0
12:30 PM	0	0	0	0	0	0	0	0	0	0	0	0	0	0	0	0	0	0	0	0	0
12:45 PM	0	0	0	0	0	0	0	0	0	0	0	0	0	0	0	0	0	0	0	0	0
Total Volume	0	0	0	0	0	0	0	0	0	0	0	0	0	0	0	0	0	0	0	0	0
% App. Total	0	0	0	0		0	0	0	0		0	0	0	0		0	0	0	0		
PHF	.000	.000	.000	.000	.000	.000	.000	.000	.000	.000	.000	.000	.000	.000	.000	.000	.000	.000	.000	.000	.000

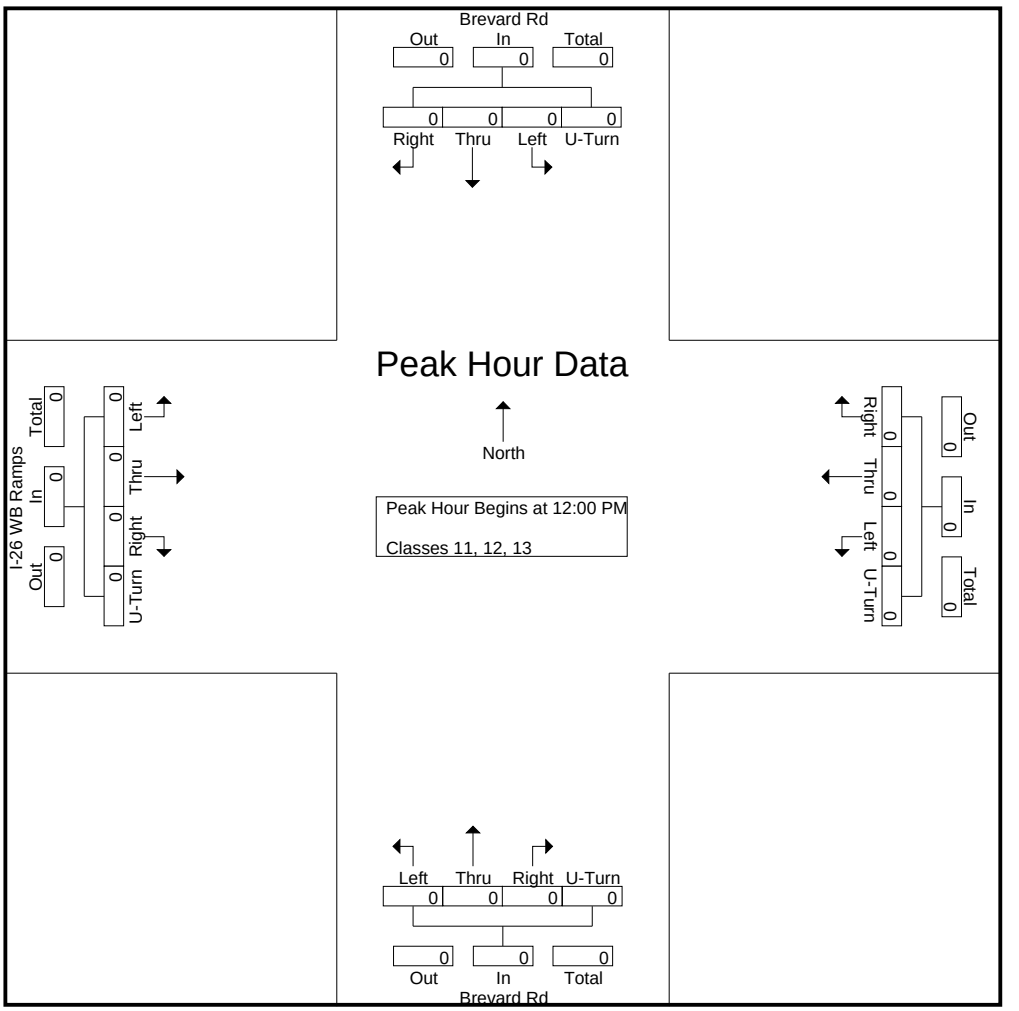

DocuSign Envelope ID: 5C03745C-4B01-4834-A65D-B77F558A4F46

Quality Counts

920 Blairhill Rd, Ste B-106
Charlotte, NC 28217

File Name : 15411701 - Brevard Rd -- I-26 WB Ramps
Site Code : 15411701
Start Date : 4/20/2021
Page No : 1

Groups Printed- Bikes, Peds

	Brevard Rd Southbound					Westbound					Brevard Rd Northbound					I-26 WB Ramps Eastbound					
Start Time	Left	Thru	Right	Peds	App. Total	Left	Thru	Right	Peds	App. Total	Left	Thru	Right	Peds	App. Total	Left	Thru	Right	Peds	App. Total	Int. Total
06:00 AM	0	0	0	0	0	0	0	0	0	0	0	0	0	0	0	0	0	0	0	0	0
06:15 AM	0	0	0	0	0	0	0	0	0	0	0	0	0	0	0	0	0	0	0	0	0
06:30 AM	0	0	0	0	0	0	0	0	0	0	0	0	0	0	0	0	0	0	0	0	0
06:45 AM	0	0	0	0	0	0	0	0	0	0	0	0	0	0	0	0	0	0	0	0	0
Total	0	0	0	0	0	0	0	0	0	0	0	0	0	0	0	0	0	0	0	0	0
07:00 AM	0	0	0	0	0	0	0	0	0	0	0	0	0	0	0	0	0	0	0	0	0
07:15 AM	0	0	0	0	0	0	0	0	0	0	0	0	0	0	0	0	0	0	0	0	0
07:30 AM	0	0	0	0	0	0	0	0	0	0	0	0	0	0	0	0	0	0	0	0	0
07:45 AM	0	0	0	0	0	0	0	0	0	0	0	0	0	0	0	0	0	0	1	1	1
Total	0	0	0	0	0	0	0	0	0	0	0	0	0	0	0	0	0	0	1	1	1
08:00 AM	0	0	0	0	0	0	0	0	0	0	0	0	0	0	0	0	0	0	0	0	0
08:15 AM	0	0	0	0	0	0	0	0	0	0	0	0	0	0	0	0	0	0	0	0	0
08:30 AM	0	0	0	0	0	0	0	0	0	0	0	0	0	0	0	0	0	0	0	0	0
08:45 AM	0	0	0	0	0	0	0	0	0	0	0	0	0	0	0	0	0	0	0	0	0
Total	0	0	0	0	0	0	0	0	0	0	0	0	0	0	0	0	0	0	0	0	0
09:00 AM	0	0	0	0	0	0	0	0	0	0	0	0	0	0	0	0	0	0	0	0	0
09:15 AM	0	0	0	0	0	0	0	0	0	0	0	0	0	0	0	0	0	0	0	0	0
09:30 AM	0	0	0	0	0	0	0	0	0	0	0	0	0	0	0	0	0	0	0	0	0
09:45 AM	0	0	0	0	0	0	0	0	0	0	0	0	0	0	0	0	0	0	0	0	0
Total	0	0	0	0	0	0	0	0	0	0	0	0	0	0	0	0	0	0	0	0	0
10:00 AM	0	0	0	0	0	0	0	0	0	0	0	0	0	0	0	0	0	0	0	0	0
10:15 AM	0	0	0	0	0	0	0	0	0	0	0	0	0	0	0	0	0	0	0	0	0
10:30 AM	0	0	0	0	0	0	0	0	0	0	0	0	0	0	0	0	0	0	1	1	1
10:45 AM	0	0	0	0	0	0	0	0	0	0	0	0	0	0	0	0	0	0	0	0	0
Total	0	0	0	0	0	0	0	0	0	0	0	0	0	0	0	0	0	0	1	1	1
11:00 AM	0	0	0	0	0	0	0	0	0	0	0	0	0	0	0	0	0	0	0	0	0
11:15 AM	0	0	0	0	0	0	0	0	0	0	0	0	0	0	0	0	0	0	0	0	0
11:30 AM	0	0	0	0	0	0	0	0	0	0	0	0	0	1	1	0	0	0	1	1	2
11:45 AM	0	0	0	0	0	0	0	0	0	0	0	0	0	0	0	0	0	0	0	0	0
Total	0	0	0	0	0	0	0	0	0	0	0	0	0	1	1	0	0	0	1	1	2
12:00 PM	0	0	0	0	0	0	0	0	0	0	0	0	0	0	0	0	0	0	0	0	0
12:15 PM	0	0	0	0	0	0	0	0	0	0	0	0	0	0	0	0	0	0	1	1	1
12:30 PM	0	0	0	0	0	0	0	0	0	0	0	0	0	0	0	0	0	0	0	0	0
12:45 PM	0	0	0	0	0	0	0	0	0	0	0	0	0	0	0	0	0	0	0	0	0
Total	0	0	0	0	0	0	0	0	0	0	0	0	0	0	0	0	0	0	1	1	1
01:00 PM	0	0	0	0	0	0	0	0	0	0	0	0	0	0	0	0	0	0	0	0	0
01:15 PM	0	0	0	0	0	0	0	0	0	0	0	0	0	0	0	0	0	0	0	0	0
01:30 PM	0	0	0	0	0	0	0	0	0	0	0	0	0	0	0	0	0	0	0	0	0
01:45 PM	0	0	0	0	0	0	0	0	0	0	0	0	0	0	0	0	0	0	0	0	0
Total	0	0	0	0	0	0	0	0	0	0	0	0	0	0	0	0	0	0	0	0	0
02:00 PM	0	0	0	0	0	0	0	0	0	0	0	0	0	0	0	0	0	0	0	0	0
02:15 PM	0	0	0	0	0	0	0	0	0	0	0	0	0	0	0	0	0	0	0	0	0
02:30 PM	0	0	0	0	0	0	0	0	0	0	0	0	0	0	0	0	0	0	0	0	0
02:45 PM	0	0	0	0	0	0	0	0	0	0	0	0	0	0	0	0	0	0	0	0	0
Total	0	0	0	0	0	0	0	0	0	0	0	0	0	0	0	0	0	0	0	0	0
03:00 PM	0	0	0	0	0	0	0	0	0	0	0	0	0	0	0	0	0	0	1	1	1
03:15 PM	0	0	0	0	0	0	0	0	0	0	0	0	0	0	0	0	0	0	2	2	2
03:30 PM	0	0	0	0	0	0	0	0	0	0	0	0	0	0	0	0	0	0	0	0	0

DocuSign Envelope ID: 5C03745C-4B01-4834-A65D-B77F558A4F46

Quality Counts

920 Blairhill Rd, Ste B-106
Charlotte, NC 28217

File Name : 15411701 - Brevard Rd -- I-26 WB Ramps
Site Code : 15411701
Start Date : 4/20/2021
Page No : 2

Groups Printed- Bikes, Peds

	Brevard Rd Southbound					Westbound					Brevard Rd Northbound					I-26 WB Ramps Eastbound					
Start Time	Left	Thru	Right	Peds	App. Total	Left	Thru	Right	Peds	App. Total	Left	Thru	Right	Peds	App. Total	Left	Thru	Right	Peds	App. Total	Int. Total
03:45 PM	0	0	0	0	0	0	0	0	0	0	0	0	0	0	0	0	0	0	0	0	0
Total	0	0	0	0	0	0	0	0	0	0	0	0	0	0	0	0	0	0	3	3	3
04:00 PM	0	0	0	0	0	0	0	0	1	1	0	0	0	0	0	0	0	0	0	0	1
04:15 PM	0	0	0	0	0	0	0	0	0	0	0	1	0	0	1	0	0	0	0	0	1
04:30 PM	0	0	0	0	0	0	0	0	0	0	0	0	0	0	0	0	0	0	0	0	0
04:45 PM	0	0	0	0	0	0	0	0	0	0	0	0	0	0	0	0	0	0	0	0	0
Total	0	0	0	0	0	0	0	0	1	1	0	1	0	0	1	0	0	0	0	0	2
05:00 PM	0	0	0	0	0	0	0	0	0	0	0	0	0	0	0	0	0	0	0	0	0
05:15 PM	0	0	0	0	0	0	0	0	0	0	0	0	0	0	0	0	0	0	0	0	0
05:30 PM	0	0	0	0	0	0	0	0	0	0	0	0	0	0	0	0	0	0	0	0	0
05:45 PM	0	0	0	0	0	0	0	0	0	0	0	1	0	0	1	0	0	0	0	0	1
Total	0	0	0	0	0	0	0	0	0	0	0	1	0	0	1	0	0	0	0	0	1
06:00 PM	0	0	0	0	0	0	0	0	0	0	0	1	0	0	1	0	0	0	0	0	1
06:15 PM	0	0	0	0	0	0	0	0	0	0	0	0	0	0	0	0	0	0	0	0	0
06:30 PM	0	0	0	0	0	0	0	0	0	0	0	0	0	0	0	0	0	0	0	0	0
06:45 PM	0	0	0	0	0	0	0	0	0	0	0	0	0	0	0	0	0	0	0	0	0
Total	0	0	0	0	0	0	0	0	0	0	0	1	0	0	1	0	0	0	0	0	1
Grand Total	0	0	0	0	0	0	0	0	1	1	0	3	0	1	4	0	0	0	7	7	12
Apprch %	0	0	0	0		0	0	0	100		0	75	0	25		0	0	0	100		
Total %	0	0	0	0	0	0	0	0	8.3	8.3	0	25	0	8.3	33.3	0	0	0	58.3	58.3	

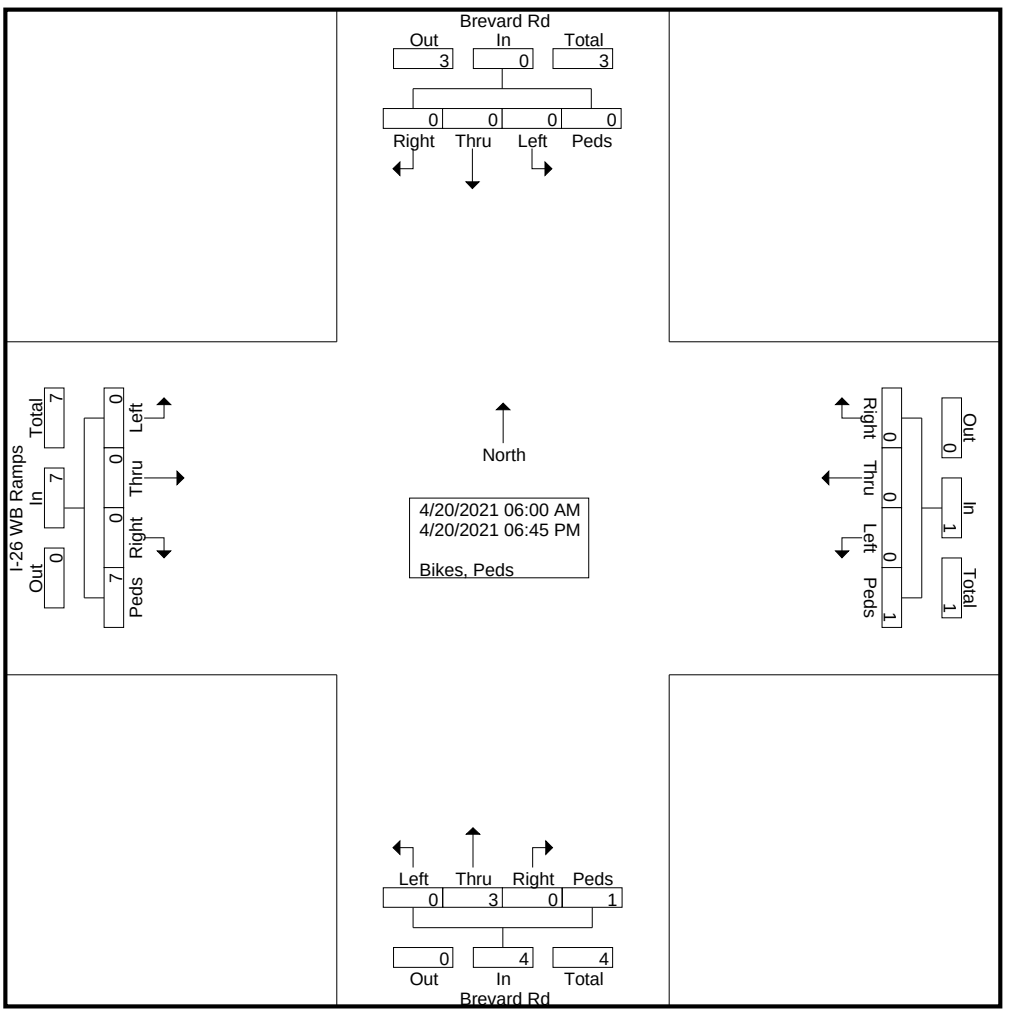

DocuSign Envelope ID: 5C03745C-4B01-4834-A65D-B77F558A4F46

Quality Counts

920 Blairhill Rd, Ste B-106
Charlotte, NC 28217

File Name : 15411701 - Brevard Rd -- I-26 WB Ramps
Site Code : 15411701
Start Date : 4/20/2021
Page No : 3

	Brevard Rd Southbound					Westbound					Brevard Rd Northbound					I-26 WB Ramps Eastbound					
Start Time	Left	Thru	Right	Peds	App. Total	Left	Thru	Right	Peds	App. Total	Left	Thru	Right	Peds	App. Total	Left	Thru	Right	Peds	App. Total	Int. Total
Peak Hour Analysis From 06:00 AM to 11:45 AM - Peak 1 of 1																					
Peak Hour for Entire Intersection Begins at 10:45 AM																					
10:45 AM	0	0	0	0	0	0	0	0	0	0	0	0	0	0	0	0	0	0	0	0	0
11:00 AM	0	0	0	0	0	0	0	0	0	0	0	0	0	0	0	0	0	0	0	0	0
11:15 AM	0	0	0	0	0	0	0	0	0	0	0	0	0	0	0	0	0	0	0	0	0
11:30 AM	0	0	0	0	0	0	0	0	0	0	0	0	0	**1**	**1**	0	0	0	**1**	**1**	**2**
Total Volume	0	0	0	0	0	0	0	0	0	0	0	0	0	1	1	0	0	0	1	1	2
% App. Total	0	0	0	0		0	0	0	0		0	0	0	100		0	0	0	100		
PHF	.000	.000	.000	.000	.000	.000	.000	.000	.000	.000	.000	.000	.000	.250	.250	.000	.000	.000	.250	.250	.250

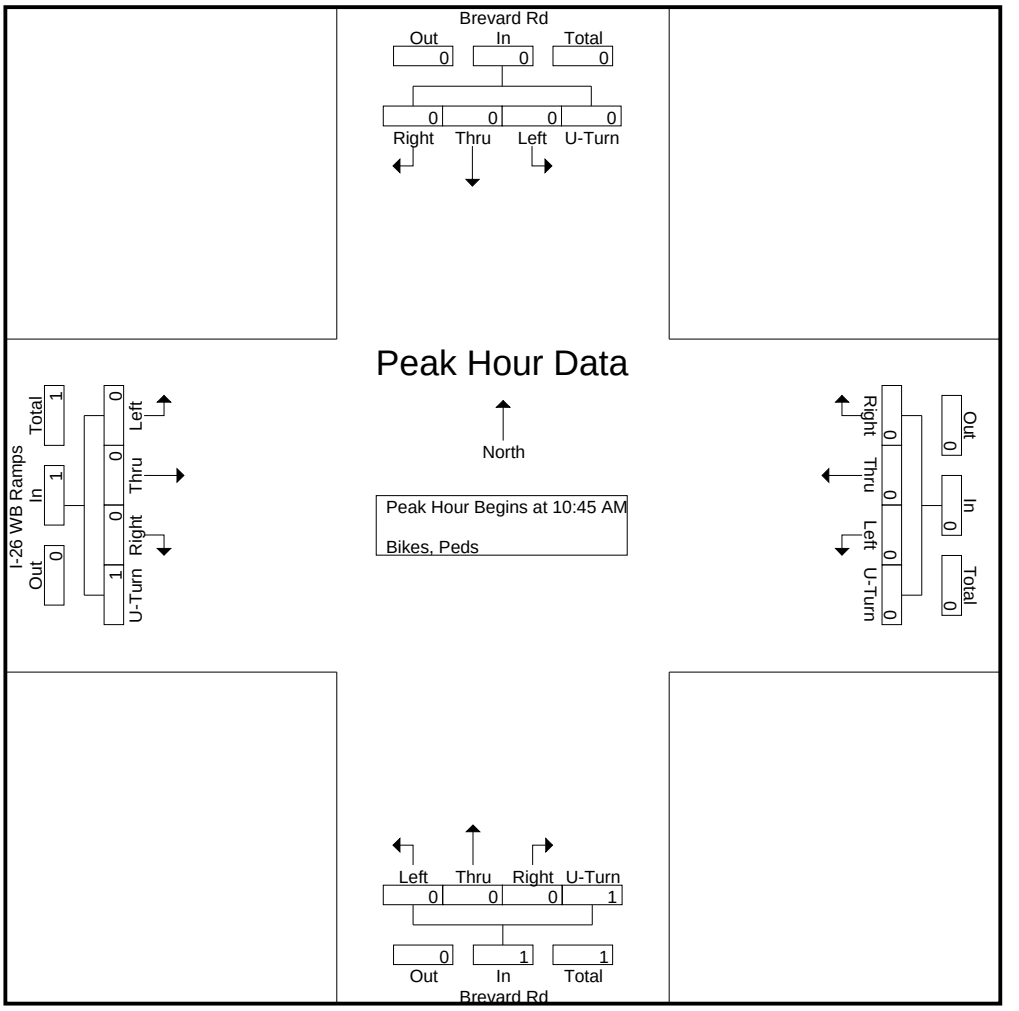

DocuSign Envelope ID: 5C03745C-4B01-4834-A65D-B77F558A4F46

Quality Counts

920 Blairhill Rd, Ste B-106
Charlotte, NC 28217

File Name : 15411701 - Brevard Rd -- I-26 WB Ramps
Site Code : 15411701
Start Date : 4/20/2021
Page No : 4

	Brevard Rd Southbound					Westbound					Brevard Rd Northbound					I-26 WB Ramps Eastbound					
Start Time	Left	Thru	Right	Peds	App. Total	Left	Thru	Right	Peds	App. Total	Left	Thru	Right	Peds	App. Total	Left	Thru	Right	Peds	App. Total	Int. Total
Peak Hour Analysis From 12:00 PM to 06:45 PM - Peak 1 of 1																					
Peak Hour for Entire Intersection Begins at 02:30 PM																					
02:30 PM	0	0	0	0	0	0	0	0	0	0	0	0	0	0	0	0	0	0	0	0	0
02:45 PM	0	0	0	0	0	0	0	0	0	0	0	0	0	0	0	0	0	0	0	0	0
03:00 PM	0	0	0	0	0	0	0	0	0	0	0	0	0	0	0	0	0	0	1	1	1
03:15 PM	0	0	0	0	0	0	0	0	0	0	0	0	0	0	0	0	0	0	**2**	**2**	**2**
Total Volume	0	0	0	0	0	0	0	0	0	0	0	0	0	0	0	0	0	0	3	3	3
% App. Total	0	0	0	0		0	0	0	0		0	0	0	0		0	0	0	100		
PHF	.000	.000	.000	.000	.000	.000	.000	.000	.000	.000	.000	.000	.000	.000	.000	.000	.000	.000	.375	.375	.375

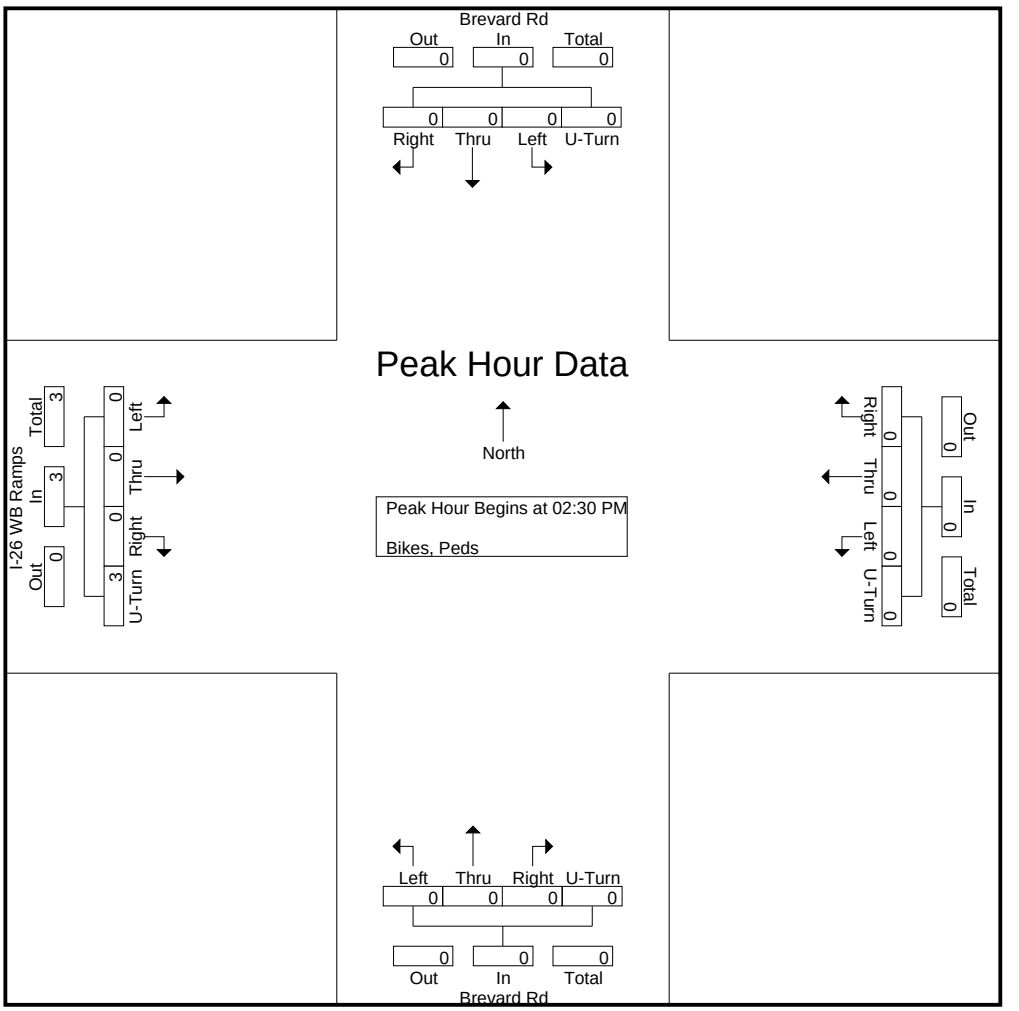

DocuSign Envelope ID: 5C03745C-4B01-4834-A65D-B77F558A4F46

QUALITY COUNTS LLC
920 Blairhill Rd, Suite 106, Charlotte, NC 28217
704.215.4616

Count Number: 15411702
County: Buncombe
City: Asheville
Division: 13

Location: Brevard Rd & I-26 EB Ramps
General Location Type: Intersection
Count Type: Turning Movement (Classification)
Count Start Date: 4/20/2021
Time: 6:00 AM – 7:00 PM
Volume: 27,153

Maximum Temperature: 69° F
Minimum Temperature: 40° F
Precipitation: 0.00 in
Snowfall: 0.0 in
Average Sky Cover: 0.2
Weather Conditions: Clear

1. **School in Session:** Yes
2. **Pedestrians Counted**: Yes
3. **Disabled Pedestrians Present**: No
   Description and Approaches Used: N/A
4. **Counted By**: Liz Cromarty
5. **Data Processor**: Jon B
6. **Signal Inventory**: N/A
7. **Data Collection Method**: Video/Count Board
8. **Equipment Operating Properly**: Yes
9. **Area Lighting Present**: Yes
10. **Nearest Roadway Stop Sign < 300 ft:** No
    If yes, list approaches: N/A
11. **Nearest Traffic Signal < 300 ft:** No
    If yes, list approaches: N/A
12. **At-Grade Railroad Crossing Present (<200 ft):** No
    If yes, list approaches & distance: N/A
13. **Other:**

↑ North

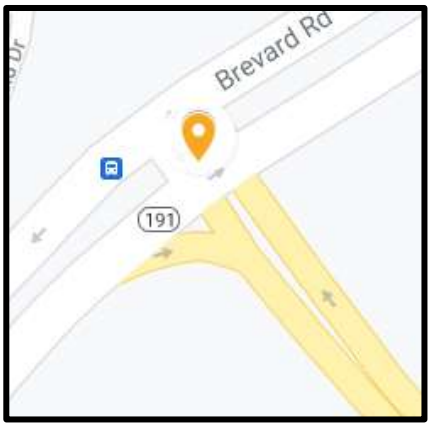

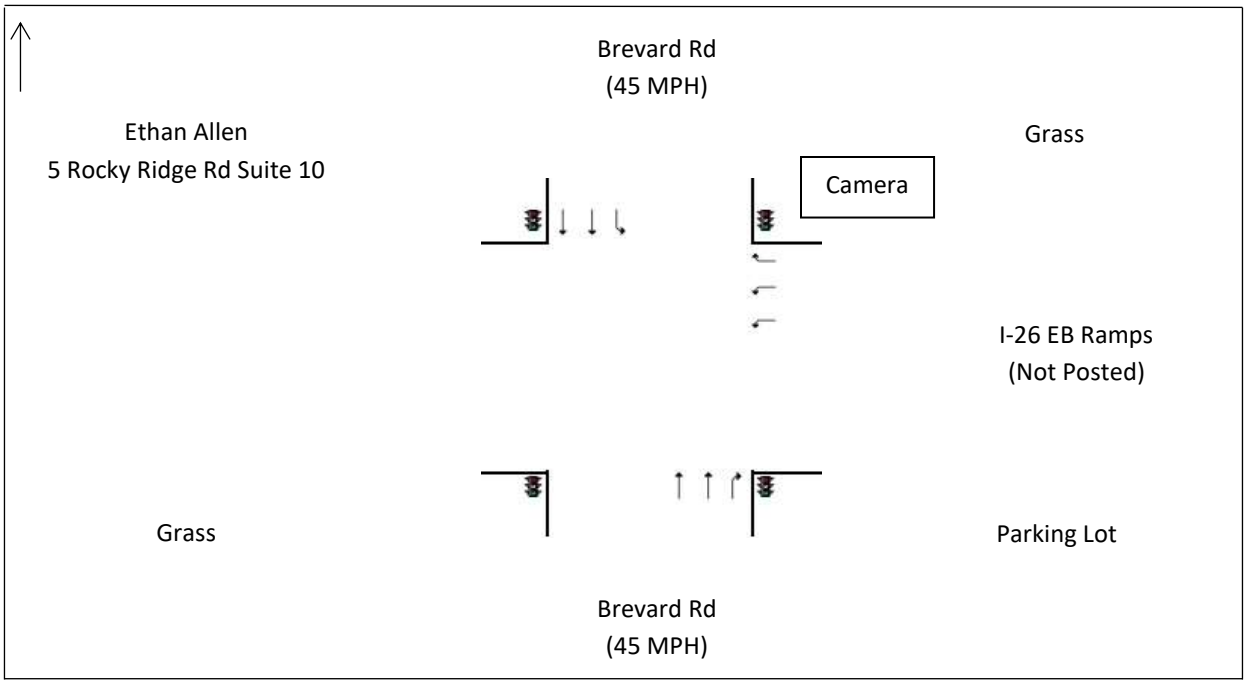

DocuSign Envelope ID: 5C03745C-4B01-4834-A65D-B77F558A4F46

Quality Counts

920 Blairhill Rd, Ste B-106
Charlotte, NC 28217

File Name : 15411702 - Brevard Rd -- I-26 EB Ramps
Site Code : 15411702
Start Date : 4/20/2021
Page No : 1

Groups Printed- Classes 1, 2, 3 - Classes 4, 5, 6, 7 - Classes 8, 9, 10 - Classes 11, 12, 13

	Brevard Rd Southbound					I-26 EB Ramps Westbound					Brevard Rd Northbound					Eastbound					
Start Time	Left	Thru	Right	U-Turn	App. Total	Left	Thru	Right	U-Turn	App. Total	Left	Thru	Right	U-Turn	App. Total	Left	Thru	Right	U-Turn	App. Total	Int. Total
06:00 AM	4	34	0	1	39	24	0	1	0	25	0	48	19	0	67	0	0	0	0	0	131
06:15 AM	9	61	0	0	70	35	0	0	0	35	0	56	23	0	79	0	0	0	0	0	184
06:30 AM	10	75	0	0	85	69	0	3	0	72	0	88	27	0	115	0	0	0	0	0	272
06:45 AM	11	88	0	0	99	69	0	4	0	73	0	85	37	0	122	0	0	0	0	0	294
Total	34	258	0	1	293	197	0	8	0	205	0	277	106	0	383	0	0	0	0	0	881
07:00 AM	22	98	0	3	123	60	0	3	0	63	0	156	46	0	202	0	0	0	0	0	388
07:15 AM	20	117	0	3	140	55	0	2	0	57	0	177	43	1	221	0	0	0	0	0	418
07:30 AM	29	134	0	3	166	81	0	2	0	83	0	199	45	0	244	0	0	0	0	0	493
07:45 AM	27	186	0	4	217	96	0	6	0	102	0	208	51	0	259	0	0	0	0	0	578
Total	98	535	0	13	646	292	0	13	0	305	0	740	185	1	926	0	0	0	0	0	1877
08:00 AM	45	158	0	3	206	83	0	8	0	91	0	206	35	0	241	0	0	0	0	0	538
08:15 AM	24	162	0	2	188	100	0	10	0	110	0	199	34	0	233	0	0	0	0	0	531
08:30 AM	20	112	0	2	134	77	0	5	0	82	0	175	33	1	209	0	0	0	0	0	425
08:45 AM	33	117	0	6	156	79	0	8	0	87	0	191	37	1	229	0	0	0	0	0	472
Total	122	549	0	13	684	339	0	31	0	370	0	771	139	2	912	0	0	0	0	0	1966
09:00 AM	11	132	0	5	148	62	0	5	0	67	0	134	31	0	165	0	0	0	0	0	380
09:15 AM	26	119	0	10	155	80	0	7	0	87	0	146	29	1	176	0	0	0	0	0	418
09:30 AM	19	119	0	2	140	77	0	8	0	85	0	173	44	0	217	0	0	0	0	0	442
09:45 AM	26	136	0	5	167	67	0	11	0	78	0	140	33	1	174	0	0	0	0	0	419
Total	82	506	0	22	610	286	0	31	0	317	0	593	137	2	732	0	0	0	0	0	1659
10:00 AM	15	135	0	4	154	92	0	6	0	98	0	169	30	0	199	0	0	0	0	0	451
10:15 AM	20	139	0	1	160	91	0	4	0	95	0	160	39	0	199	0	0	0	0	0	454
10:30 AM	20	128	0	8	156	85	0	6	0	91	0	160	36	0	196	0	0	0	0	0	443
10:45 AM	20	158	0	6	184	108	0	6	0	114	0	154	34	0	188	0	0	0	0	0	486
Total	75	560	0	19	654	376	0	22	0	398	0	643	139	0	782	0	0	0	0	0	1834
11:00 AM	36	140	0	5	181	93	0	9	0	102	0	170	34	0	204	0	0	0	0	0	487
11:15 AM	25	141	0	5	171	75	0	10	0	85	0	164	44	0	208	0	0	0	0	0	464
11:30 AM	20	152	0	6	178	81	0	6	0	87	0	171	47	0	218	0	0	0	0	0	483
11:45 AM	28	169	0	13	210	91	0	13	0	104	0	171	40	0	211	0	0	0	0	0	525
Total	109	602	0	29	740	340	0	38	0	378	0	676	165	0	841	0	0	0	0	0	1959
12:00 PM	27	163	0	10	200	76	0	10	0	86	0	208	46	0	254	0	0	0	0	0	540
12:15 PM	22	167	0	5	194	103	0	7	0	110	0	231	55	0	286	0	0	0	0	0	590
12:30 PM	25	173	0	7	205	90	0	6	1	97	0	231	49	1	281	0	0	0	0	0	583
12:45 PM	18	174	0	10	202	105	0	13	0	118	0	261	40	0	301	0	0	0	0	0	621
Total	92	677	0	32	801	374	0	36	1	411	0	931	190	1	1122	0	0	0	0	0	2334
01:00 PM	31	189	0	9	229	83	0	3	0	86	0	223	47	0	270	0	0	0	0	0	585
01:15 PM	29	193	0	3	225	106	0	7	0	113	0	226	43	0	269	0	0	0	0	0	607
01:30 PM	33	167	0	5	205	87	0	8	0	95	0	224	52	0	276	0	0	0	0	0	576
01:45 PM	24	175	0	4	203	102	0	3	0	105	0	198	54	1	253	0	0	0	0	0	561
Total	117	724	0	21	862	378	0	21	0	399	0	871	196	1	1068	0	0	0	0	0	2329
02:00 PM	25	169	0	5	199	97	0	9	0	106	0	248	37	0	285	0	0	0	0	0	590
02:15 PM	33	177	0	8	218	110	0	5	0	115	0	258	62	0	320	0	0	0	0	0	653
02:30 PM	34	168	0	5	207	87	0	8	0	95	0	243	38	1	282	0	0	0	0	0	584
02:45 PM	30	196	0	7	233	91	0	11	0	102	0	274	46	0	320	0	0	0	0	0	655
Total	122	710	0	25	857	385	0	33	0	418	0	1023	183	1	1207	0	0	0	0	0	2482
03:00 PM	38	193	0	5	236	111	0	4	0	115	0	269	49	0	318	0	0	0	0	0	669
03:15 PM	37	227	0	6	270	98	0	4	0	102	0	289	67	0	356	0	0	0	0	0	728
03:30 PM	42	182	0	8	232	75	0	8	0	83	0	269	60	0	329	0	0	0	0	0	644

DocuSign Envelope ID: 5C03745C-4B01-4834-A65D-B77F558A4F46

Quality Counts

920 Blairhill Rd, Ste B-106
Charlotte, NC 28217

File Name : 15411702 - Brevard Rd -- I-26 EB Ramps
Site Code : 15411702
Start Date : 4/20/2021
Page No : 2

Groups Printed- Classes 1, 2, 3 - Classes 4, 5, 6, 7 - Classes 8, 9, 10 - Classes 11, 12, 13

	Brevard Rd Southbound					I-26 EB Ramps Westbound					Brevard Rd Northbound					Eastbound					
Start Time	Left	Thru	Right	U-Turn	App. Total	Left	Thru	Right	U-Turn	App. Total	Left	Thru	Right	U-Turn	App. Total	Left	Thru	Right	U-Turn	App. Total	Int. Total
03:45 PM	33	186	0	4	223	101	0	7	0	108	0	263	52	0	315	0	0	0	0	0	646
Total	150	788	0	23	961	385	0	23	0	408	0	1090	228	0	1318	0	0	0	0	0	2687
04:00 PM	36	192	0	8	236	105	0	7	0	112	0	291	57	1	349	0	0	0	0	0	697
04:15 PM	26	205	0	6	237	107	0	4	0	111	0	293	39	1	333	0	0	0	0	0	681
04:30 PM	23	198	0	9	230	96	0	3	0	99	0	259	60	1	320	0	0	0	0	0	649
04:45 PM	39	201	0	9	249	87	0	7	0	94	0	287	47	1	335	0	0	0	0	0	678
Total	124	796	0	32	952	395	0	21	0	416	0	1130	203	4	1337	0	0	0	0	0	2705
05:00 PM	43	228	0	11	282	104	0	9	0	113	0	280	63	0	343	0	0	0	0	0	738
05:15 PM	26	207	0	11	244	88	0	4	0	92	0	290	72	0	362	0	0	0	0	0	698
05:30 PM	37	192	0	9	238	80	0	8	0	88	0	314	48	0	362	0	0	0	0	0	688
05:45 PM	17	164	0	11	192	105	0	4	0	109	0	237	43	0	280	0	0	0	0	0	581
Total	123	791	0	42	956	377	0	25	0	402	0	1121	226	0	1347	0	0	0	0	0	2705
06:00 PM	26	159	0	6	191	74	0	4	0	78	0	213	35	1	249	0	0	0	0	0	518
06:15 PM	18	130	0	4	152	80	0	2	0	82	0	160	32	0	192	0	0	0	0	0	426
06:30 PM	16	114	0	4	134	69	0	4	0	73	0	169	42	0	211	0	0	0	0	0	418
06:45 PM	14	105	0	2	121	46	0	4	0	50	0	167	35	0	202	0	0	0	0	0	373
Total	74	508	0	16	598	269	0	14	0	283	0	709	144	1	854	0	0	0	0	0	1735
Grand Total	1322	8004	0	288	9614	4393	0	316	1	4710	0	10575	2241	13	12829	0	0	0	0	0	27153
Apprch %	13.8	83.3	0	3		93.3	0	6.7	0		0	82.4	17.5	0.1		0	0	0	0		
Total %	4.9	29.5	0	1.1	35.4	16.2	0	1.2	0	17.3	0	38.9	8.3	0	47.2	0	0	0	0	0	
Classes 1, 2, 3	1170	7534	0	286	8990	4240	0	306	1	4547	0	10043	2018	13	12074	0	0	0	0	0	25611
% Classes 1, 2, 3	88.5	94.1	0	99.3	93.5	96.5	0	96.8	100	96.5	0	95	90	100	94.1	0	0	0	0	0	94.3
Classes 4, 5, 6, 7	101	324	0	2	427	99	0	8	0	107	0	432	148	0	580	0	0	0	0	0	1114
% Classes 4, 5, 6, 7	7.6	4	0	0.7	4.4	2.3	0	2.5	0	2.3	0	4.1	6.6	0	4.5	0	0	0	0	0	4.1
Classes 8, 9, 10	51	146	0	0	197	54	0	2	0	56	0	100	75	0	175	0	0	0	0	0	428
% Classes 8, 9, 10	3.9	1.8	0	0	2	1.2	0	0.6	0	1.2	0	0.9	3.3	0	1.4	0	0	0	0	0	1.6
Classes 11, 12, 13	0	0	0	0	0	0	0	0	0	0	0	0	0	0	0	0	0	0	0	0	0
% Classes 11, 12, 13	0	0	0	0	0	0	0	0	0	0	0	0	0	0	0	0	0	0	0	0	0

DocuSign Envelope ID: 5C03745C-4B01-4834-A65D-B77F558A4F46

Quality Counts

920 Blairhill Rd, Ste B-106
Charlotte, NC 28217

File Name : 15411702 - Brevard Rd -- I-26 EB Ramps
Site Code : 15411702
Start Date : 4/20/2021
Page No : 3

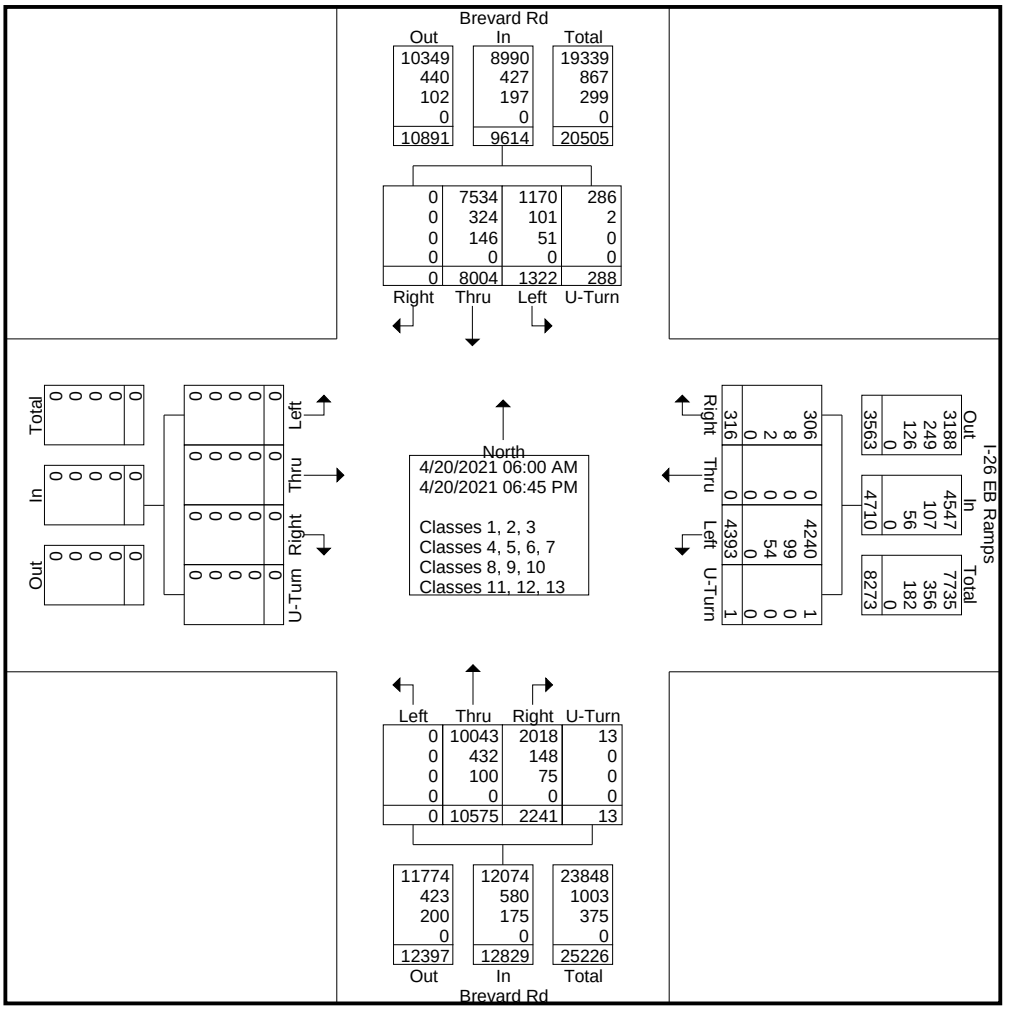

DocuSign Envelope ID: 5C03745C-4B01-4834-A65D-B77F558A4F46

Quality Counts

920 Blairhill Rd, Ste B-106
Charlotte, NC 28217

File Name : 15411702 - Brevard Rd -- I-26 EB Ramps
Site Code : 15411702
Start Date : 4/20/2021
Page No : 4

	Brevard Rd Southbound					I-26 EB Ramps Westbound					Brevard Rd Northbound					Eastbound					
Start Time	Left	Thru	Right	U-Turn	App. Total	Left	Thru	Right	U-Turn	App. Total	Left	Thru	Right	U-Turn	App. Total	Left	Thru	Right	U-Turn	App. Total	Int. Total
Peak Hour Analysis From 06:00 AM to 11:45 AM - Peak 1 of 1																					
Peak Hour for Entire Intersection Begins at 07:30 AM																					
07:30 AM	29	134	0	3	166	81	0	2	0	83	0	199	45	0	244	0	0	0	0	0	493
07:45 AM	27	**186**	0	**4**	**217**	96	0	6	0	102	0	**208**	**51**	0	**259**	0	0	0	0	0	**578**
08:00 AM	**45**	158	0	3	206	83	0	8	0	91	0	206	35	0	241	0	0	0	0	0	538
08:15 AM	24	162	0	2	188	**100**	0	**10**	0	**110**	0	199	34	0	233	0	0	0	0	0	531
Total Volume	125	640	0	12	777	360	0	26	0	386	0	812	165	0	977	0	0	0	0	0	2140
% App. Total	16.1	82.4	0	1.5		93.3	0	6.7	0		0	83.1	16.9	0		0	0	0	0		
PHF	.694	.860	.000	.750	.895	.900	.000	.650	.000	.877	.000	.976	.809	.000	.943	.000	.000	.000	.000	.000	.926

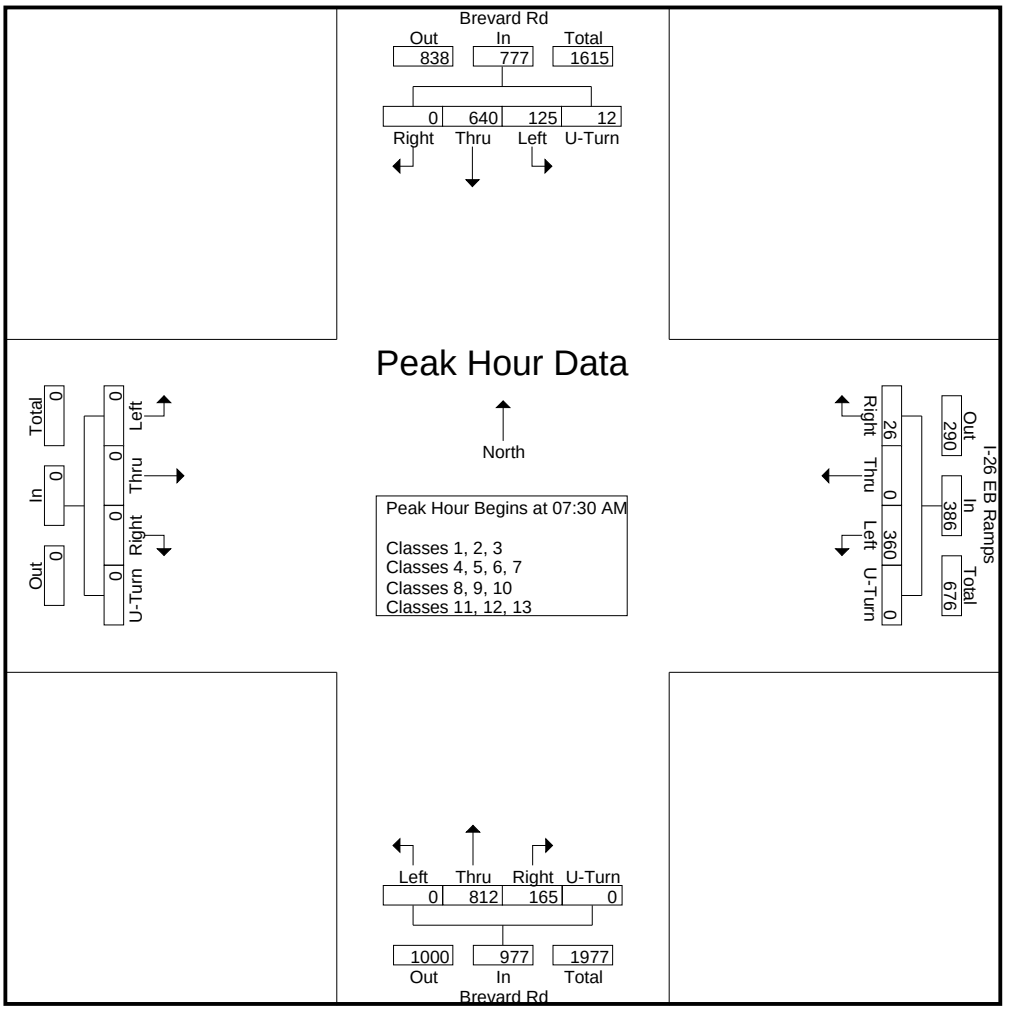

DocuSign Envelope ID: 5C03745C-4B01-4834-A65D-B77F558A4F46

Quality Counts

920 Blairhill Rd, Ste B-106
Charlotte, NC 28217

File Name : 15411702 - Brevard Rd -- I-26 EB Ramps
Site Code : 15411702
Start Date : 4/20/2021
Page No : 5

	Brevard Rd Southbound					I-26 EB Ramps Westbound					Brevard Rd Northbound					Eastbound					
Start Time	Left	Thru	Right	U-Turn	App. Total	Left	Thru	Right	U-Turn	App. Total	Left	Thru	Right	U-Turn	App. Total	Left	Thru	Right	U-Turn	App. Total	Int. Total
Peak Hour Analysis From 12:00 PM to 06:45 PM - Peak 1 of 1																					
Peak Hour for Entire Intersection Begins at 04:45 PM																					
04:45 PM	39	201	0	9	249	87	0	7	0	94	0	287	47	**1**	335	0	0	0	0	0	678
05:00 PM	**43**	**228**	0	**11**	**282**	**104**	0	**9**	0	**113**	0	280	63	0	343	0	0	0	0	0	**738**
05:15 PM	26	207	0	11	244	88	0	4	0	92	0	290	**72**	0	**362**	0	0	0	0	0	698
05:30 PM	37	192	0	9	238	80	0	8	0	88	0	**314**	48	0	362	0	0	0	0	0	688
Total Volume	145	828	0	40	1013	359	0	28	0	387	0	1171	230	1	1402	0	0	0	0	0	2802
% App. Total	14.3	81.7	0	3.9		92.8	0	7.2	0		0	83.5	16.4	0.1		0	0	0	0		
PHF	.843	.908	.000	.909	.898	.863	.000	.778	.000	.856	.000	.932	.799	.250	.968	.000	.000	.000	.000	.000	.949

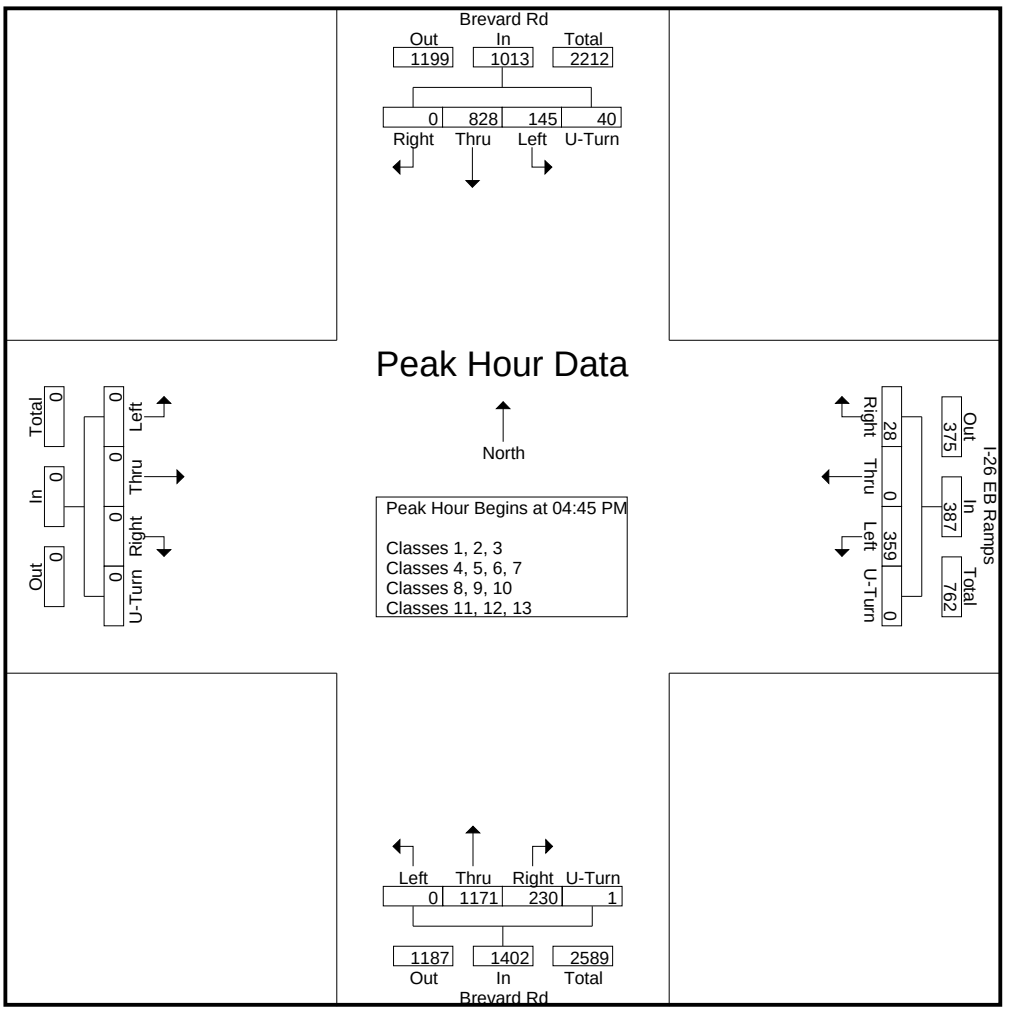

DocuSign Envelope ID: 5C03745C-4B01-4834-A65D-B77F558A4F46

Quality Counts

920 Blairhill Rd, Ste B-106
Charlotte, NC 28217

File Name : 15411702 - Brevard Rd -- I-26 EB Ramps
Site Code : 15411702
Start Date : 4/20/2021
Page No : 1

Groups Printed- Classes 1, 2, 3

	Brevard Rd Southbound					I-26 EB Ramps Westbound					Brevard Rd Northbound					Eastbound					
Start Time	Left	Thru	Right	U-Turn	App. Total	Left	Thru	Right	U-Turn	App. Total	Left	Thru	Right	U-Turn	App. Total	Left	Thru	Right	U-Turn	App. Total	Int. Total
06:00 AM	2	34	0	1	37	24	0	1	0	25	0	43	18	0	61	0	0	0	0	0	123
06:15 AM	7	59	0	0	66	35	0	0	0	35	0	49	20	0	69	0	0	0	0	0	170
06:30 AM	10	71	0	0	81	67	0	3	0	70	0	78	27	0	105	0	0	0	0	0	256
06:45 AM	8	80	0	0	88	66	0	4	0	70	0	73	32	0	105	0	0	0	0	0	263
Total	27	244	0	1	272	192	0	8	0	200	0	243	97	0	340	0	0	0	0	0	812
07:00 AM	18	88	0	3	109	56	0	3	0	59	0	142	42	0	184	0	0	0	0	0	352
07:15 AM	18	111	0	3	132	51	0	2	0	53	0	172	39	1	212	0	0	0	0	0	397
07:30 AM	24	127	0	3	154	79	0	2	0	81	0	187	40	0	227	0	0	0	0	0	462
07:45 AM	22	173	0	4	199	95	0	5	0	100	0	195	47	0	242	0	0	0	0	0	541
Total	82	499	0	13	594	281	0	12	0	293	0	696	168	1	865	0	0	0	0	0	1752
08:00 AM	43	150	0	3	196	81	0	8	0	89	0	189	32	0	221	0	0	0	0	0	506
08:15 AM	19	153	0	2	174	98	0	10	0	108	0	187	26	0	213	0	0	0	0	0	495
08:30 AM	19	104	0	2	125	75	0	5	0	80	0	169	27	1	197	0	0	0	0	0	402
08:45 AM	25	107	0	6	138	75	0	8	0	83	0	178	32	1	211	0	0	0	0	0	432
Total	106	514	0	13	633	329	0	31	0	360	0	723	117	2	842	0	0	0	0	0	1835
09:00 AM	11	120	0	5	136	59	0	5	0	64	0	125	27	0	152	0	0	0	0	0	352
09:15 AM	21	107	0	9	137	78	0	7	0	85	0	132	26	1	159	0	0	0	0	0	381
09:30 AM	13	107	0	2	122	70	0	7	0	77	0	156	36	0	192	0	0	0	0	0	391
09:45 AM	22	122	0	5	149	64	0	11	0	75	0	125	26	1	152	0	0	0	0	0	376
Total	67	456	0	21	544	271	0	30	0	301	0	538	115	2	655	0	0	0	0	0	1500
10:00 AM	12	123	0	4	139	88	0	6	0	94	0	154	28	0	182	0	0	0	0	0	415
10:15 AM	16	124	0	1	141	85	0	4	0	89	0	148	33	0	181	0	0	0	0	0	411
10:30 AM	16	116	0	8	140	82	0	5	0	87	0	153	32	0	185	0	0	0	0	0	412
10:45 AM	17	143	0	6	166	102	0	6	0	108	0	143	27	0	170	0	0	0	0	0	444
Total	61	506	0	19	586	357	0	21	0	378	0	598	120	0	718	0	0	0	0	0	1682
11:00 AM	32	133	0	5	170	90	0	9	0	99	0	163	30	0	193	0	0	0	0	0	462
11:15 AM	21	132	0	5	158	72	0	10	0	82	0	154	36	0	190	0	0	0	0	0	430
11:30 AM	18	139	0	6	163	76	0	6	0	82	0	159	41	0	200	0	0	0	0	0	445
11:45 AM	22	161	0	13	196	84	0	10	0	94	0	161	30	0	191	0	0	0	0	0	481
Total	93	565	0	29	687	322	0	35	0	357	0	637	137	0	774	0	0	0	0	0	1818
12:00 PM	21	151	0	10	182	74	0	10	0	84	0	196	42	0	238	0	0	0	0	0	504
12:15 PM	18	158	0	4	180	98	0	7	0	105	0	215	51	0	266	0	0	0	0	0	551
12:30 PM	19	164	0	7	190	88	0	6	1	95	0	220	39	1	260	0	0	0	0	0	545
12:45 PM	14	165	0	10	189	97	0	13	0	110	0	252	38	0	290	0	0	0	0	0	589
Total	72	638	0	31	741	357	0	36	1	394	0	883	170	1	1054	0	0	0	0	0	2189
01:00 PM	28	165	0	9	202	81	0	2	0	83	0	212	39	0	251	0	0	0	0	0	536
01:15 PM	26	183	0	3	212	102	0	7	0	109	0	215	39	0	254	0	0	0	0	0	575
01:30 PM	31	154	0	5	190	85	0	8	0	93	0	211	43	0	254	0	0	0	0	0	537
01:45 PM	21	163	0	4	188	101	0	2	0	103	0	190	47	1	238	0	0	0	0	0	529
Total	106	665	0	21	792	369	0	19	0	388	0	828	168	1	997	0	0	0	0	0	2177
02:00 PM	23	164	0	5	192	93	0	9	0	102	0	238	34	0	272	0	0	0	0	0	566
02:15 PM	25	166	0	8	199	106	0	5	0	111	0	248	54	0	302	0	0	0	0	0	612
02:30 PM	29	158	0	5	192	85	0	8	0	93	0	229	36	1	266	0	0	0	0	0	551
02:45 PM	29	184	0	7	220	87	0	10	0	97	0	265	42	0	307	0	0	0	0	0	624
Total	106	672	0	25	803	371	0	32	0	403	0	980	166	1	1147	0	0	0	0	0	2353
03:00 PM	36	183	0	5	224	110	0	4	0	114	0	258	43	0	301	0	0	0	0	0	639
03:15 PM	36	215	0	6	257	90	0	4	0	94	0	279	62	0	341	0	0	0	0	0	692
03:30 PM	39	172	0	8	219	73	0	8	0	81	0	257	55	0	312	0	0	0	0	0	612

DocuSign Envelope ID: 5C03745C-4B01-4834-A65D-B77F558A4F46

Quality Counts

920 Blairhill Rd, Ste B-106
Charlotte, NC 28217

File Name : 15411702 - Brevard Rd -- I-26 EB Ramps
Site Code : 15411702
Start Date : 4/20/2021
Page No : 2

Groups Printed- Classes 1, 2, 3

	Brevard Rd Southbound					I-26 EB Ramps Westbound					Brevard Rd Northbound					Eastbound					
Start Time	Left	Thru	Right	U-Turn	App. Total	Left	Thru	Right	U-Turn	App. Total	Left	Thru	Right	U-Turn	App. Total	Left	Thru	Right	U-Turn	App. Total	Int. Total
03:45 PM	30	171	0	4	205	100	0	7	0	107	0	254	48	0	302	0	0	0	0	0	614
Total	141	741	0	23	905	373	0	23	0	396	0	1048	208	0	1256	0	0	0	0	0	2557
04:00 PM	35	178	0	8	221	101	0	7	0	108	0	276	56	1	333	0	0	0	0	0	662
04:15 PM	26	194	0	6	226	105	0	4	0	109	0	282	37	1	320	0	0	0	0	0	655
04:30 PM	21	196	0	9	226	95	0	3	0	98	0	249	55	1	305	0	0	0	0	0	629
04:45 PM	38	195	0	9	242	86	0	7	0	93	0	275	45	1	321	0	0	0	0	0	656
Total	120	763	0	32	915	387	0	21	0	408	0	1082	193	4	1279	0	0	0	0	0	2602
05:00 PM	42	225	0	11	278	103	0	9	0	112	0	273	62	0	335	0	0	0	0	0	725
05:15 PM	25	202	0	11	238	86	0	4	0	90	0	278	67	0	345	0	0	0	0	0	673
05:30 PM	34	190	0	9	233	78	0	8	0	86	0	308	48	0	356	0	0	0	0	0	675
05:45 PM	16	160	0	11	187	103	0	4	0	107	0	231	42	0	273	0	0	0	0	0	567
Total	117	777	0	42	936	370	0	25	0	395	0	1090	219	0	1309	0	0	0	0	0	2640
06:00 PM	26	156	0	6	188	72	0	4	0	76	0	209	34	1	244	0	0	0	0	0	508
06:15 PM	18	123	0	4	145	80	0	2	0	82	0	157	31	0	188	0	0	0	0	0	415
06:30 PM	14	113	0	4	131	64	0	4	0	68	0	166	41	0	207	0	0	0	0	0	406
06:45 PM	14	102	0	2	118	45	0	3	0	48	0	165	34	0	199	0	0	0	0	0	365
Total	72	494	0	16	582	261	0	13	0	274	0	697	140	1	838	0	0	0	0	0	1694
Grand Total	1170	7534	0	286	8990	4240	0	306	1	4547	0	10043	2018	13	12074	0	0	0	0	0	25611
Apprch %	13	83.8	0	3.2		93.2	0	6.7	0		0	83.2	16.7	0.1		0	0	0	0		
Total %	4.6	29.4	0	1.1	35.1	16.6	0	1.2	0	17.8	0	39.2	7.9	0.1	47.1	0	0	0	0	0	

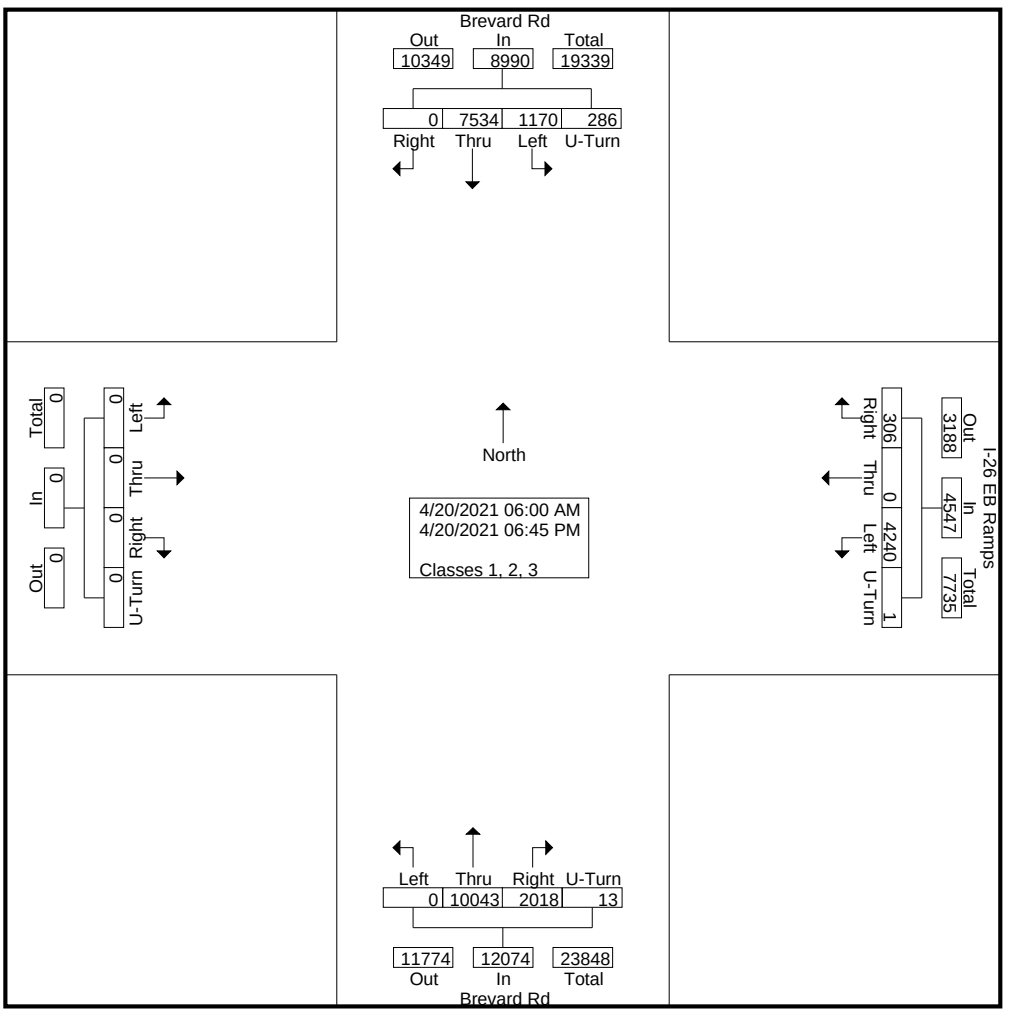

DocuSign Envelope ID: 5C03745C-4B01-4834-A65D-B77F558A4F46

Quality Counts

920 Blairhill Rd, Ste B-106
Charlotte, NC 28217

File Name : 15411702 - Brevard Rd -- I-26 EB Ramps
Site Code : 15411702
Start Date : 4/20/2021
Page No : 3

	Brevard Rd Southbound					I-26 EB Ramps Westbound					Brevard Rd Northbound					Eastbound					
Start Time	Left	Thru	Right	U-Turn	App. Total	Left	Thru	Right	U-Turn	App. Total	Left	Thru	Right	U-Turn	App. Total	Left	Thru	Right	U-Turn	App. Total	Int. Total
Peak Hour Analysis From 06:00 AM to 11:45 AM - Peak 1 of 1																					
Peak Hour for Entire Intersection Begins at 07:30 AM																					
07:30 AM	24	127	0	3	154	79	0	2	0	81	0	187	40	0	227	0	0	0	0	0	462
07:45 AM	22	**173**	0	**4**	**199**	95	0	5	0	100	0	**195**	**47**	0	**242**	0	0	0	0	0	**541**
08:00 AM	**43**	150	0	3	196	81	0	8	0	89	0	189	32	0	221	0	0	0	0	0	506
08:15 AM	19	153	0	2	174	**98**	0	**10**	0	**108**	0	187	26	0	213	0	0	0	0	0	495
Total Volume	108	603	0	12	723	353	0	25	0	378	0	758	145	0	903	0	0	0	0	0	2004
% App. Total	14.9	83.4	0	1.7		93.4	0	6.6	0		0	83.9	16.1	0		0	0	0	0		
PHF	.628	.871	.000	.750	.908	.901	.000	.625	.000	.875	.000	.972	.771	.000	.933	.000	.000	.000	.000	.000	.926

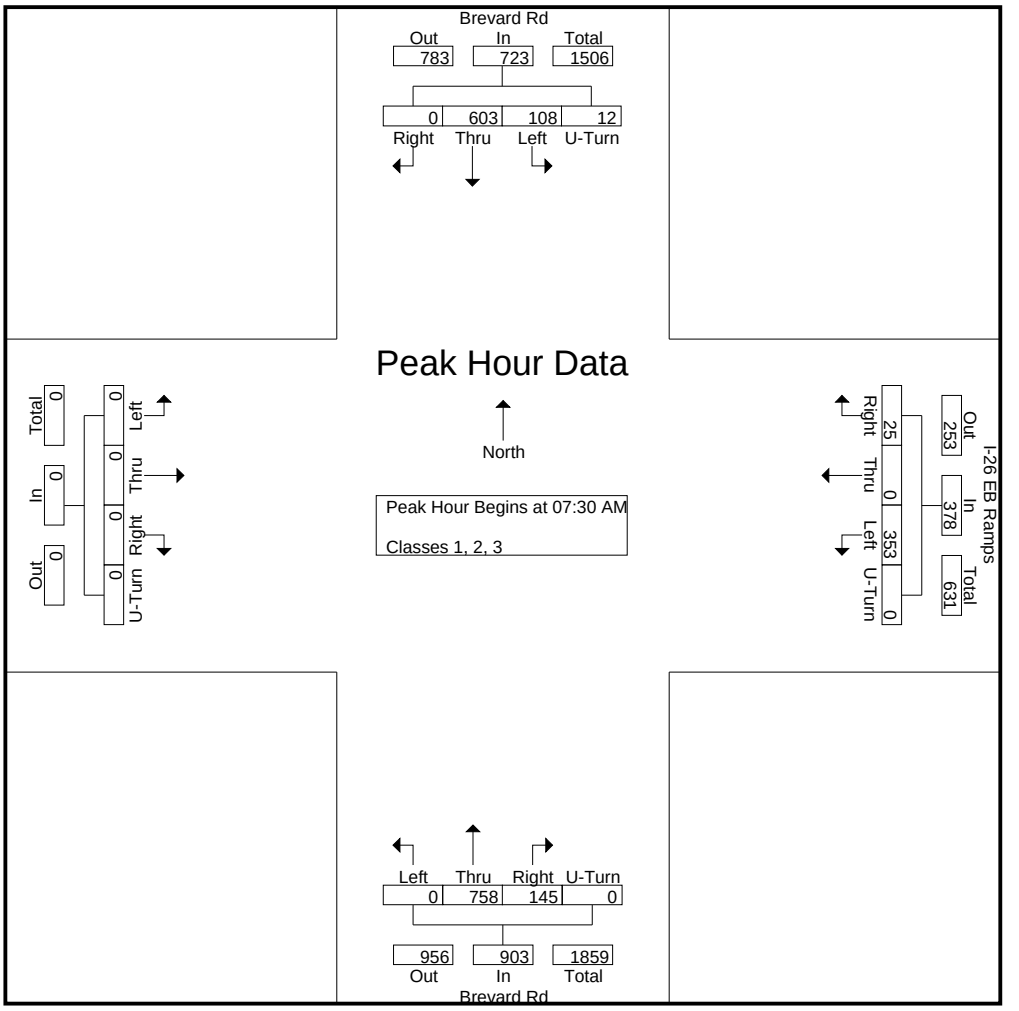

DocuSign Envelope ID: 5C03745C-4B01-4834-A65D-B77F558A4F46

Quality Counts

920 Blairhill Rd, Ste B-106
Charlotte, NC 28217

File Name : 15411702 - Brevard Rd -- I-26 EB Ramps
Site Code : 15411702
Start Date : 4/20/2021
Page No : 4

	Brevard Rd Southbound					I-26 EB Ramps Westbound					Brevard Rd Northbound					Eastbound					
Start Time	Left	Thru	Right	U-Turn	App. Total	Left	Thru	Right	U-Turn	App. Total	Left	Thru	Right	U-Turn	App. Total	Left	Thru	Right	U-Turn	App. Total	Int. Total
Peak Hour Analysis From 12:00 PM to 06:45 PM - Peak 1 of 1																					
Peak Hour for Entire Intersection Begins at 04:45 PM																					
04:45 PM	38	195	0	9	242	86	0	7	0	93	0	275	45	**1**	321	0	0	0	0	0	656
05:00 PM	**42**	**225**	0	**11**	**278**	**103**	0	**9**	0	**112**	0	273	62	0	335	0	0	0	0	0	**725**
05:15 PM	25	202	0	11	238	86	0	4	0	90	0	278	**67**	0	345	0	0	0	0	0	673
05:30 PM	34	190	0	9	233	78	0	8	0	86	0	**308**	48	0	**356**	0	0	0	0	0	675
Total Volume	139	812	0	40	991	353	0	28	0	381	0	1134	222	1	1357	0	0	0	0	0	2729
% App. Total	14	81.9	0	4		92.7	0	7.3	0		0	83.6	16.4	0.1		0	0	0	0		
PHF	.827	.902	.000	.909	.891	.857	.000	.778	.000	.850	.000	.920	.828	.250	.953	.000	.000	.000	.000	.000	.941

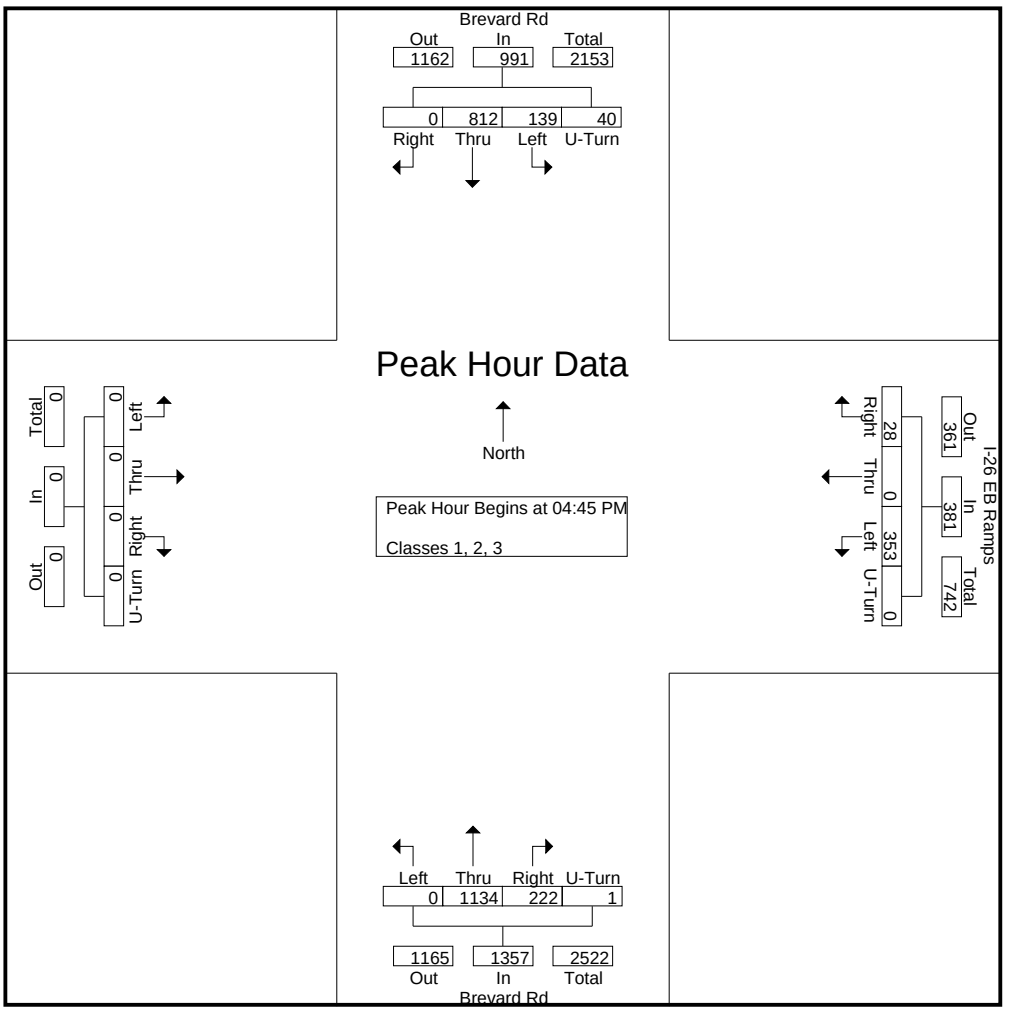

DocuSign Envelope ID: 5C03745C-4B01-4834-A65D-B77F558A4F46

Quality Counts

920 Blairhill Rd, Ste B-106
Charlotte, NC 28217

File Name : 15411702 - Brevard Rd -- I-26 EB Ramps
Site Code : 15411702
Start Date : 4/20/2021
Page No : 1

Groups Printed- Classes 4, 5, 6, 7

	Brevard Rd Southbound					I-26 EB Ramps Westbound					Brevard Rd Northbound					Eastbound					
Start Time	Left	Thru	Right	U-Turn	App. Total	Left	Thru	Right	U-Turn	App. Total	Left	Thru	Right	U-Turn	App. Total	Left	Thru	Right	U-Turn	App. Total	Int. Total
06:00 AM	1	0	0	0	1	0	0	0	0	0	0	4	0	0	4	0	0	0	0	0	5
06:15 AM	2	0	0	0	2	0	0	0	0	0	0	7	3	0	10	0	0	0	0	0	12
06:30 AM	0	2	0	0	2	0	0	0	0	0	0	10	0	0	10	0	0	0	0	0	12
06:45 AM	2	7	0	0	9	1	0	0	0	1	0	10	3	0	13	0	0	0	0	0	23
Total	5	9	0	0	14	1	0	0	0	1	0	31	6	0	37	0	0	0	0	0	52
07:00 AM	4	8	0	0	12	3	0	0	0	3	0	11	2	0	13	0	0	0	0	0	28
07:15 AM	2	3	0	0	5	4	0	0	0	4	0	4	4	0	8	0	0	0	0	0	17
07:30 AM	4	5	0	0	9	1	0	0	0	1	0	10	2	0	12	0	0	0	0	0	22
07:45 AM	2	8	0	0	10	1	0	0	0	1	0	10	1	0	11	0	0	0	0	0	22
Total	12	24	0	0	36	9	0	0	0	9	0	35	9	0	44	0	0	0	0	0	89
08:00 AM	2	8	0	0	10	1	0	0	0	1	0	13	2	0	15	0	0	0	0	0	26
08:15 AM	2	4	0	0	6	1	0	0	0	1	0	8	4	0	12	0	0	0	0	0	19
08:30 AM	0	4	0	0	4	1	0	0	0	1	0	5	4	0	9	0	0	0	0	0	14
08:45 AM	5	6	0	0	11	3	0	0	0	3	0	12	5	0	17	0	0	0	0	0	31
Total	9	22	0	0	31	6	0	0	0	6	0	38	15	0	53	0	0	0	0	0	90
09:00 AM	0	6	0	0	6	2	0	0	0	2	0	9	4	0	13	0	0	0	0	0	21
09:15 AM	4	5	0	1	10	1	0	0	0	1	0	7	2	0	9	0	0	0	0	0	20
09:30 AM	2	8	0	0	10	3	0	0	0	3	0	13	5	0	18	0	0	0	0	0	31
09:45 AM	2	10	0	0	12	3	0	0	0	3	0	10	3	0	13	0	0	0	0	0	28
Total	8	29	0	1	38	9	0	0	0	9	0	39	14	0	53	0	0	0	0	0	100
10:00 AM	2	6	0	0	8	3	0	0	0	3	0	13	2	0	15	0	0	0	0	0	26
10:15 AM	3	12	0	0	15	4	0	0	0	4	0	10	6	0	16	0	0	0	0	0	35
10:30 AM	3	10	0	0	13	2	0	1	0	3	0	6	1	0	7	0	0	0	0	0	23
10:45 AM	3	10	0	0	13	4	0	0	0	4	0	10	5	0	15	0	0	0	0	0	32
Total	11	38	0	0	49	13	0	1	0	14	0	39	14	0	53	0	0	0	0	0	116
11:00 AM	3	5	0	0	8	3	0	0	0	3	0	6	4	0	10	0	0	0	0	0	21
11:15 AM	2	8	0	0	10	1	0	0	0	1	0	10	5	0	15	0	0	0	0	0	26
11:30 AM	1	11	0	0	12	3	0	0	0	3	0	10	4	0	14	0	0	0	0	0	29
11:45 AM	4	6	0	0	10	4	0	3	0	7	0	8	4	0	12	0	0	0	0	0	29
Total	10	30	0	0	40	11	0	3	0	14	0	34	17	0	51	0	0	0	0	0	105
12:00 PM	5	8	0	0	13	1	0	0	0	1	0	8	2	0	10	0	0	0	0	0	24
12:15 PM	3	6	0	1	10	3	0	0	0	3	0	10	4	0	14	0	0	0	0	0	27
12:30 PM	4	6	0	0	10	2	0	0	0	2	0	9	8	0	17	0	0	0	0	0	29
12:45 PM	3	6	0	0	9	3	0	0	0	3	0	6	1	0	7	0	0	0	0	0	19
Total	15	26	0	1	42	9	0	0	0	9	0	33	15	0	48	0	0	0	0	0	99
01:00 PM	2	13	0	0	15	1	0	1	0	2	0	9	5	0	14	0	0	0	0	0	31
01:15 PM	3	6	0	0	9	3	0	0	0	3	0	8	4	0	12	0	0	0	0	0	24
01:30 PM	1	9	0	0	10	2	0	0	0	2	0	9	6	0	15	0	0	0	0	0	27
01:45 PM	3	11	0	0	14	1	0	1	0	2	0	8	5	0	13	0	0	0	0	0	29
Total	9	39	0	0	48	7	0	2	0	9	0	34	20	0	54	0	0	0	0	0	111
02:00 PM	1	2	0	0	3	3	0	0	0	3	0	8	1	0	9	0	0	0	0	0	15
02:15 PM	7	8	0	0	15	3	0	0	0	3	0	9	5	0	14	0	0	0	0	0	32
02:30 PM	4	4	0	0	8	1	0	0	0	1	0	12	2	0	14	0	0	0	0	0	23
02:45 PM	1	10	0	0	11	2	0	1	0	3	0	7	3	0	10	0	0	0	0	0	24
Total	13	24	0	0	37	9	0	1	0	10	0	36	11	0	47	0	0	0	0	0	94
03:00 PM	2	6	0	0	8	1	0	0	0	1	0	7	6	0	13	0	0	0	0	0	22
03:15 PM	0	8	0	0	8	8	0	0	0	8	0	9	5	0	14	0	0	0	0	0	30
03:30 PM	2	8	0	0	10	1	0	0	0	1	0	11	4	0	15	0	0	0	0	0	26

DocuSign Envelope ID: 5C03745C-4B01-4834-A65D-B77F558A4F46

Quality Counts

920 Blairhill Rd, Ste B-106
Charlotte, NC 28217

File Name : 15411702 - Brevard Rd -- I-26 EB Ramps
Site Code : 15411702
Start Date : 4/20/2021

Groups Printed- Classes 4, 5, 6, 7

	Brevard Rd Southbound					I-26 EB Ramps Westbound					Brevard Rd Northbound					Eastbound					
Start Time	Left	Thru	Right	U-Turn	App. Total	Left	Thru	Right	U-Turn	App. Total	Left	Thru	Right	U-Turn	App. Total	Left	Thru	Right	U-Turn	App. Total	Int. Total
03:45 PM	3	13	0	0	16	1	0	0	0	1	0	8	1	0	9	0	0	0	0	0	26
Total	7	35	0	0	42	11	0	0	0	11	0	35	16	0	51	0	0	0	0	0	104
04:00 PM	0	12	0	0	12	1	0	0	0	1	0	13	1	0	14	0	0	0	0	0	27
04:15 PM	0	11	0	0	11	2	0	0	0	2	0	9	1	0	10	0	0	0	0	0	23
04:30 PM	0	1	0	0	1	0	0	0	0	0	0	9	2	0	11	0	0	0	0	0	12
04:45 PM	0	3	0	0	3	1	0	0	0	1	0	10	1	0	11	0	0	0	0	0	15
Total	0	27	0	0	27	4	0	0	0	4	0	41	5	0	46	0	0	0	0	0	77
05:00 PM	1	1	0	0	2	1	0	0	0	1	0	7	1	0	8	0	0	0	0	0	11
05:15 PM	0	5	0	0	5	2	0	0	0	2	0	12	3	0	15	0	0	0	0	0	22
05:30 PM	1	1	0	0	2	1	0	0	0	1	0	3	0	0	3	0	0	0	0	0	6
05:45 PM	0	3	0	0	3	0	0	0	0	0	0	5	1	0	6	0	0	0	0	0	9
Total	2	10	0	0	12	4	0	0	0	4	0	27	5	0	32	0	0	0	0	0	48
06:00 PM	0	3	0	0	3	2	0	0	0	2	0	4	0	0	4	0	0	0	0	0	9
06:15 PM	0	5	0	0	5	0	0	0	0	0	0	2	1	0	3	0	0	0	0	0	8
06:30 PM	0	1	0	0	1	3	0	0	0	3	0	3	0	0	3	0	0	0	0	0	7
06:45 PM	0	2	0	0	2	1	0	1	0	2	0	1	0	0	1	0	0	0	0	0	5
Total	0	11	0	0	11	6	0	1	0	7	0	10	1	0	11	0	0	0	0	0	29
Grand Total	101	324	0	2	427	99	0	8	0	107	0	432	148	0	580	0	0	0	0	0	1114
Apprch %	23.7	75.9	0	0.5		92.5	0	7.5	0		0	74.5	25.5	0		0	0	0	0		
Total %	9.1	29.1	0	0.2	38.3	8.9	0	0.7	0	9.6	0	38.8	13.3	0	52.1	0	0	0	0	0	

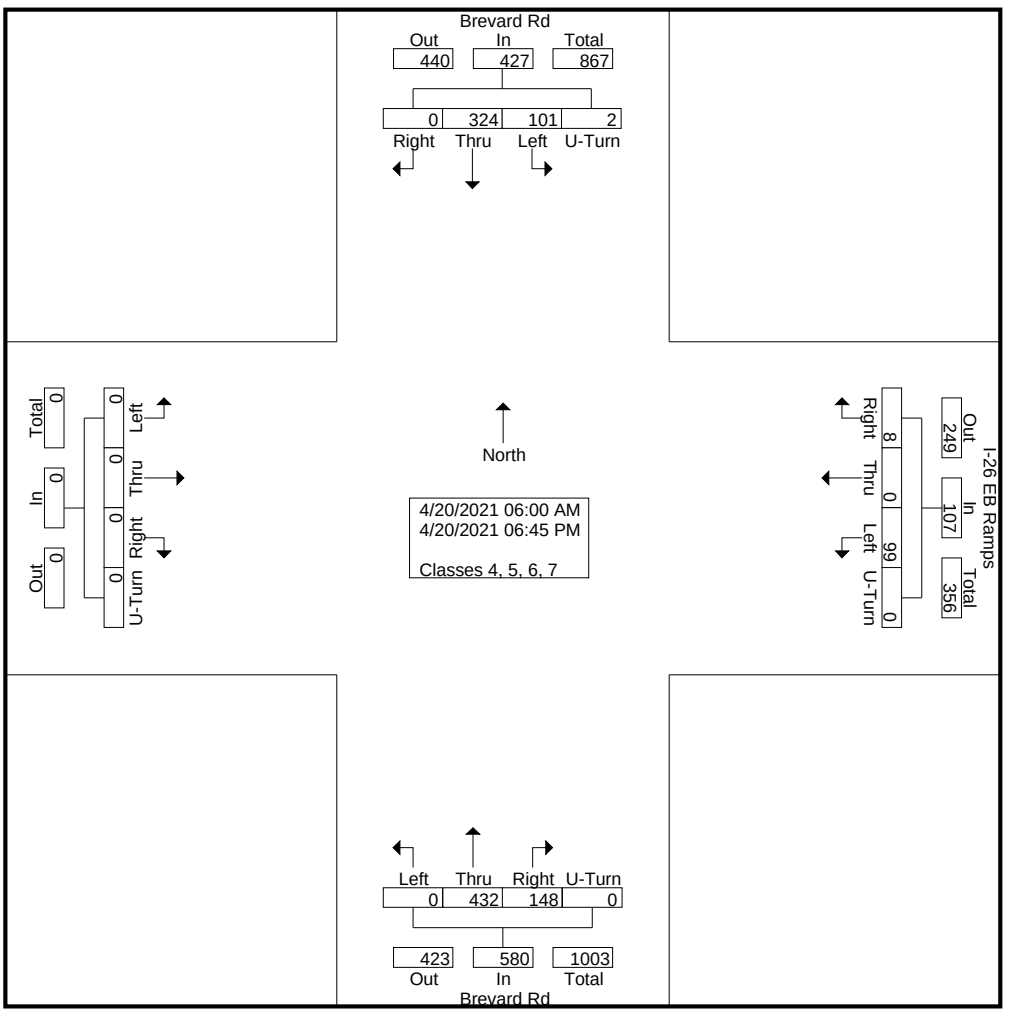

DocuSign Envelope ID: 5C03745C-4B01-4834-A65D-B77F558A4F46

Quality Counts

920 Blairhill Rd, Ste B-106
Charlotte, NC 28217

File Name : 15411702 - Brevard Rd -- I-26 EB Ramps
Site Code : 15411702
Start Date : 4/20/2021
Page No : 3

	Brevard Rd Southbound					I-26 EB Ramps Westbound					Brevard Rd Northbound					Eastbound					
Start Time	Left	Thru	Right	U-Turn	App. Total	Left	Thru	Right	U-Turn	App. Total	Left	Thru	Right	U-Turn	App. Total	Left	Thru	Right	U-Turn	App. Total	Int. Total
Peak Hour Analysis From 06:00 AM to 11:45 AM - Peak 1 of 1																					
Peak Hour for Entire Intersection Begins at 09:30 AM																					
09:30 AM	2	8	0	0	10	3	0	0	0	3	0	**13**	5	0	**18**	0	0	0	0	0	31
09:45 AM	2	10	0	0	12	3	0	0	0	3	0	10	3	0	13	0	0	0	0	0	28
10:00 AM	2	6	0	0	8	3	0	0	0	3	0	13	2	0	15	0	0	0	0	0	26
10:15 AM	**3**	**12**	0	0	**15**	**4**	0	0	0	**4**	0	10	**6**	0	16	0	0	0	0	0	**35**
Total Volume	9	36	0	0	45	13	0	0	0	13	0	46	16	0	62	0	0	0	0	0	120
% App. Total	20	80	0	0		100	0	0	0		0	74.2	25.8	0		0	0	0	0		
PHF	.750	.750	.000	.000	.750	.813	.000	.000	.000	.813	.000	.885	.667	.000	.861	.000	.000	.000	.000	.000	.857

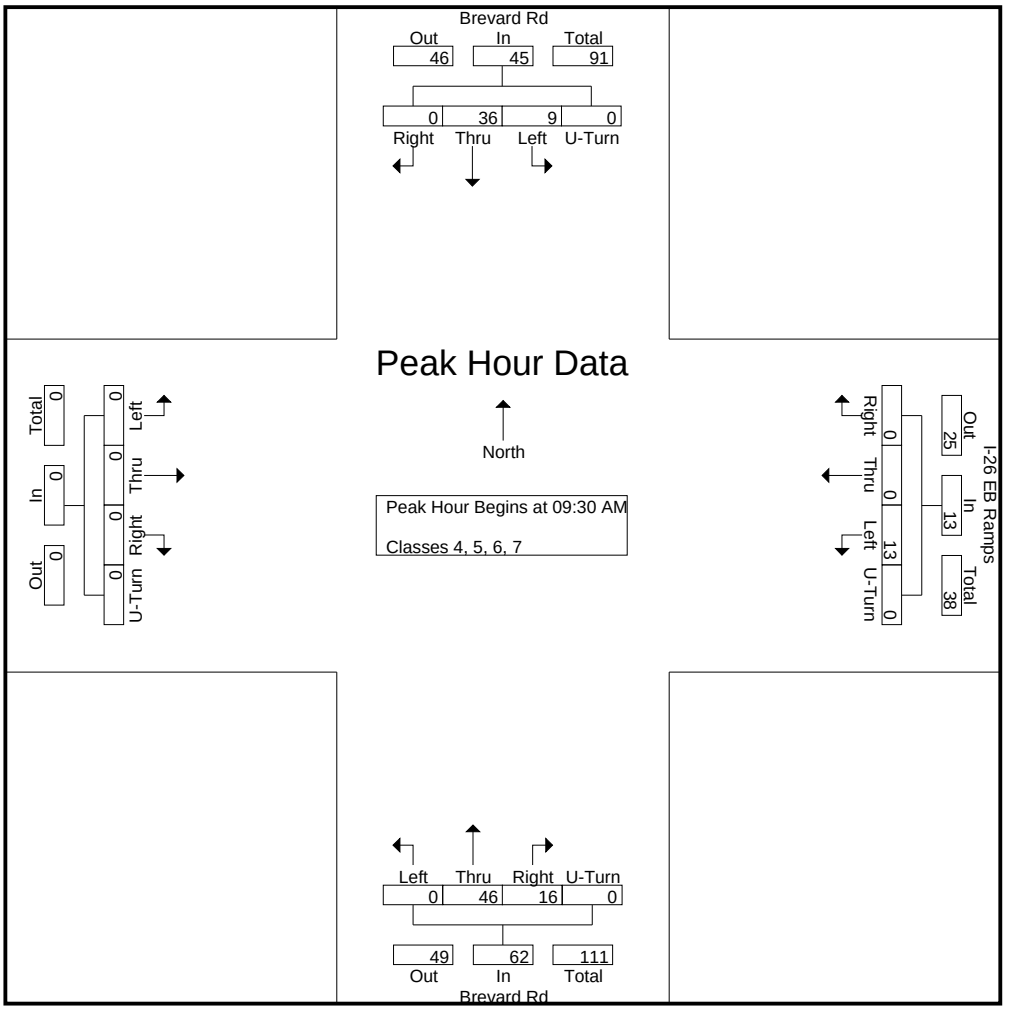

DocuSign Envelope ID: 5C03745C-4B01-4834-A65D-B77F558A4F46

Quality Counts

920 Blairhill Rd, Ste B-106
Charlotte, NC 28217

File Name : 15411702 - Brevard Rd -- I-26 EB Ramps
Site Code : 15411702
Start Date : 4/20/2021
Page No : 4

	Brevard Rd Southbound					I-26 EB Ramps Westbound					Brevard Rd Northbound					Eastbound					
Start Time	Left	Thru	Right	U-Turn	App. Total	Left	Thru	Right	U-Turn	App. Total	Left	Thru	Right	U-Turn	App. Total	Left	Thru	Right	U-Turn	App. Total	Int. Total
Peak Hour Analysis From 12:00 PM to 06:45 PM - Peak 1 of 1																					
Peak Hour for Entire Intersection Begins at 01:00 PM																					
01:00 PM	2	**13**	0	0	**15**	1	0	**1**	0	2	0	**9**	5	0	14	0	0	0	0	0	**31**
01:15 PM	**3**	6	0	0	9	**3**	0	0	0	**3**	0	8	4	0	12	0	0	0	0	0	24
01:30 PM	1	9	0	0	10	2	0	0	0	2	0	9	**6**	0	**15**	0	0	0	0	0	27
01:45 PM	3	11	0	0	14	1	0	1	0	2	0	8	5	0	13	0	0	0	0	0	29
Total Volume	9	39	0	0	48	7	0	2	0	9	0	34	20	0	54	0	0	0	0	0	111
% App. Total	18.8	81.2	0	0		77.8	0	22.2	0		0	63	37	0		0	0	0	0		
PHF	.750	.750	.000	.000	.800	.583	.000	.500	.000	.750	.000	.944	.833	.000	.900	.000	.000	.000	.000	.000	.895

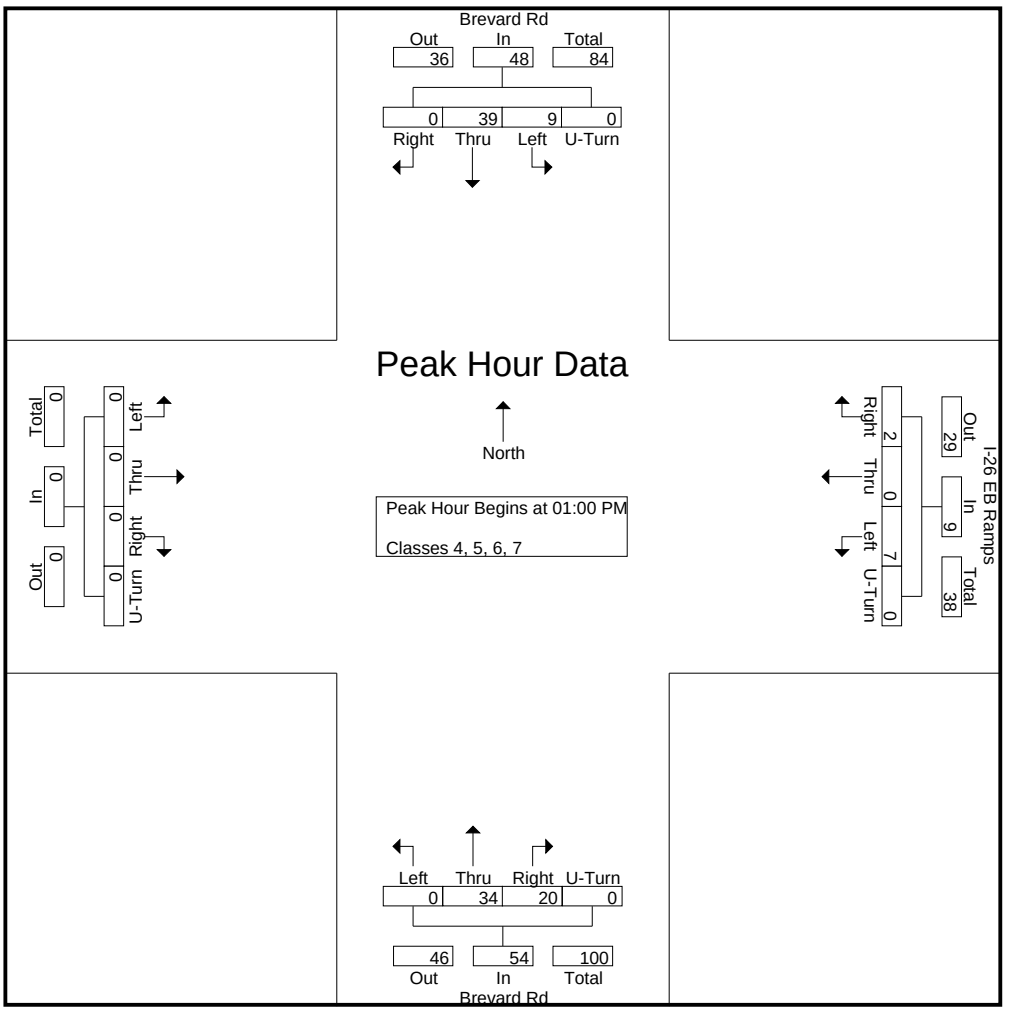

DocuSign Envelope ID: 5C03745C-4B01-4834-A65D-B77F558A4F46

Quality Counts

920 Blairhill Rd, Ste B-106
Charlotte, NC 28217

File Name : 15411702 - Brevard Rd -- I-26 EB Ramps
Site Code : 15411702
Start Date : 4/20/2021
Page No : 1

Groups Printed- Classes 8, 9, 10

	Brevard Rd Southbound					I-26 EB Ramps Westbound					Brevard Rd Northbound					Eastbound					
Start Time	Left	Thru	Right	U-Turn	App. Total	Left	Thru	Right	U-Turn	App. Total	Left	Thru	Right	U-Turn	App. Total	Left	Thru	Right	U-Turn	App. Total	Int. Total
06:00 AM	1	0	0	0	1	0	0	0	0	0	0	1	1	0	2	0	0	0	0	0	3
06:15 AM	0	2	0	0	2	0	0	0	0	0	0	0	0	0	0	0	0	0	0	0	2
06:30 AM	0	2	0	0	2	2	0	0	0	2	0	0	0	0	0	0	0	0	0	0	4
06:45 AM	1	1	0	0	2	2	0	0	0	2	0	2	2	0	4	0	0	0	0	0	8
Total	2	5	0	0	7	4	0	0	0	4	0	3	3	0	6	0	0	0	0	0	17
07:00 AM	0	2	0	0	2	1	0	0	0	1	0	3	2	0	5	0	0	0	0	0	8
07:15 AM	0	3	0	0	3	0	0	0	0	0	0	1	0	0	1	0	0	0	0	0	4
07:30 AM	1	2	0	0	3	1	0	0	0	1	0	2	3	0	5	0	0	0	0	0	9
07:45 AM	3	5	0	0	8	0	0	1	0	1	0	3	3	0	6	0	0	0	0	0	15
Total	4	12	0	0	16	2	0	1	0	3	0	9	8	0	17	0	0	0	0	0	36
08:00 AM	0	0	0	0	0	1	0	0	0	1	0	4	1	0	5	0	0	0	0	0	6
08:15 AM	3	5	0	0	8	1	0	0	0	1	0	4	4	0	8	0	0	0	0	0	17
08:30 AM	1	4	0	0	5	1	0	0	0	1	0	1	2	0	3	0	0	0	0	0	9
08:45 AM	3	4	0	0	7	1	0	0	0	1	0	1	0	0	1	0	0	0	0	0	9
Total	7	13	0	0	20	4	0	0	0	4	0	10	7	0	17	0	0	0	0	0	41
09:00 AM	0	6	0	0	6	1	0	0	0	1	0	0	0	0	0	0	0	0	0	0	7
09:15 AM	1	7	0	0	8	1	0	0	0	1	0	7	1	0	8	0	0	0	0	0	17
09:30 AM	4	4	0	0	8	4	0	1	0	5	0	4	3	0	7	0	0	0	0	0	20
09:45 AM	2	4	0	0	6	0	0	0	0	0	0	5	4	0	9	0	0	0	0	0	15
Total	7	21	0	0	28	6	0	1	0	7	0	16	8	0	24	0	0	0	0	0	59
10:00 AM	1	6	0	0	7	1	0	0	0	1	0	2	0	0	2	0	0	0	0	0	10
10:15 AM	1	3	0	0	4	2	0	0	0	2	0	2	0	0	2	0	0	0	0	0	8
10:30 AM	1	2	0	0	3	1	0	0	0	1	0	1	3	0	4	0	0	0	0	0	8
10:45 AM	0	5	0	0	5	2	0	0	0	2	0	1	2	0	3	0	0	0	0	0	10
Total	3	16	0	0	19	6	0	0	0	6	0	6	5	0	11	0	0	0	0	0	36
11:00 AM	1	2	0	0	3	0	0	0	0	0	0	1	0	0	1	0	0	0	0	0	4
11:15 AM	2	1	0	0	3	2	0	0	0	2	0	0	3	0	3	0	0	0	0	0	8
11:30 AM	1	2	0	0	3	2	0	0	0	2	0	2	2	0	4	0	0	0	0	0	9
11:45 AM	2	2	0	0	4	3	0	0	0	3	0	2	6	0	8	0	0	0	0	0	15
Total	6	7	0	0	13	7	0	0	0	7	0	5	11	0	16	0	0	0	0	0	36
12:00 PM	1	4	0	0	5	1	0	0	0	1	0	4	2	0	6	0	0	0	0	0	12
12:15 PM	1	3	0	0	4	2	0	0	0	2	0	6	0	0	6	0	0	0	0	0	12
12:30 PM	2	3	0	0	5	0	0	0	0	0	0	2	2	0	4	0	0	0	0	0	9
12:45 PM	1	3	0	0	4	5	0	0	0	5	0	3	1	0	4	0	0	0	0	0	13
Total	5	13	0	0	18	8	0	0	0	8	0	15	5	0	20	0	0	0	0	0	46
01:00 PM	1	11	0	0	12	1	0	0	0	1	0	2	3	0	5	0	0	0	0	0	18
01:15 PM	0	4	0	0	4	1	0	0	0	1	0	3	0	0	3	0	0	0	0	0	8
01:30 PM	1	4	0	0	5	0	0	0	0	0	0	4	3	0	7	0	0	0	0	0	12
01:45 PM	0	1	0	0	1	0	0	0	0	0	0	0	2	0	2	0	0	0	0	0	3
Total	2	20	0	0	22	2	0	0	0	2	0	9	8	0	17	0	0	0	0	0	41
02:00 PM	1	3	0	0	4	1	0	0	0	1	0	2	2	0	4	0	0	0	0	0	9
02:15 PM	1	3	0	0	4	1	0	0	0	1	0	1	3	0	4	0	0	0	0	0	9
02:30 PM	1	6	0	0	7	1	0	0	0	1	0	2	0	0	2	0	0	0	0	0	10
02:45 PM	0	2	0	0	2	2	0	0	0	2	0	2	1	0	3	0	0	0	0	0	7
Total	3	14	0	0	17	5	0	0	0	5	0	7	6	0	13	0	0	0	0	0	35
03:00 PM	0	4	0	0	4	0	0	0	0	0	0	4	0	0	4	0	0	0	0	0	8
03:15 PM	1	4	0	0	5	0	0	0	0	0	0	1	0	0	1	0	0	0	0	0	6
03:30 PM	1	2	0	0	3	1	0	0	0	1	0	1	1	0	2	0	0	0	0	0	6

DocuSign Envelope ID: 5C03745C-4B01-4834-A65D-B77F558A4F46

Quality Counts

920 Blairhill Rd, Ste B-106
Charlotte, NC 28217

File Name : 15411702 - Brevard Rd -- I-26 EB Ramps
Site Code : 15411702
Start Date : 4/20/2021
Page No : 2

Groups Printed- Classes 8, 9, 10

	Brevard Rd Southbound					I-26 EB Ramps Westbound					Brevard Rd Northbound					Eastbound					
Start Time	Left	Thru	Right	U-Turn	App. Total	Left	Thru	Right	U-Turn	App. Total	Left	Thru	Right	U-Turn	App. Total	Left	Thru	Right	U-Turn	App. Total	Int. Total
03:45 PM	0	2	0	0	2	0	0	0	0	0	0	1	3	0	4	0	0	0	0	0	6
Total	2	12	0	0	14	1	0	0	0	1	0	7	4	0	11	0	0	0	0	0	26
04:00 PM	1	2	0	0	3	3	0	0	0	3	0	2	0	0	2	0	0	0	0	0	8
04:15 PM	0	0	0	0	0	0	0	0	0	0	0	2	1	0	3	0	0	0	0	0	3
04:30 PM	2	1	0	0	3	1	0	0	0	1	0	1	3	0	4	0	0	0	0	0	8
04:45 PM	1	3	0	0	4	0	0	0	0	0	0	2	1	0	3	0	0	0	0	0	7
Total	4	6	0	0	10	4	0	0	0	4	0	7	5	0	12	0	0	0	0	0	26
05:00 PM	0	2	0	0	2	0	0	0	0	0	0	0	0	0	0	0	0	0	0	0	2
05:15 PM	1	0	0	0	1	0	0	0	0	0	0	0	2	0	2	0	0	0	0	0	3
05:30 PM	2	1	0	0	3	1	0	0	0	1	0	3	0	0	3	0	0	0	0	0	7
05:45 PM	1	1	0	0	2	2	0	0	0	2	0	1	0	0	1	0	0	0	0	0	5
Total	4	4	0	0	8	3	0	0	0	3	0	4	2	0	6	0	0	0	0	0	17
06:00 PM	0	0	0	0	0	0	0	0	0	0	0	0	1	0	1	0	0	0	0	0	1
06:15 PM	0	2	0	0	2	0	0	0	0	0	0	1	0	0	1	0	0	0	0	0	3
06:30 PM	2	0	0	0	2	2	0	0	0	2	0	0	1	0	1	0	0	0	0	0	5
06:45 PM	0	1	0	0	1	0	0	0	0	0	0	1	1	0	2	0	0	0	0	0	3
Total	2	3	0	0	5	2	0	0	0	2	0	2	3	0	5	0	0	0	0	0	12
Grand Total	51	146	0	0	197	54	0	2	0	56	0	100	75	0	175	0	0	0	0	0	428
Apprch %	25.9	74.1	0	0		96.4	0	3.6	0		0	57.1	42.9	0		0	0	0	0		
Total %	11.9	34.1	0	0	46	12.6	0	0.5	0	13.1	0	23.4	17.5	0	40.9	0	0	0	0	0	

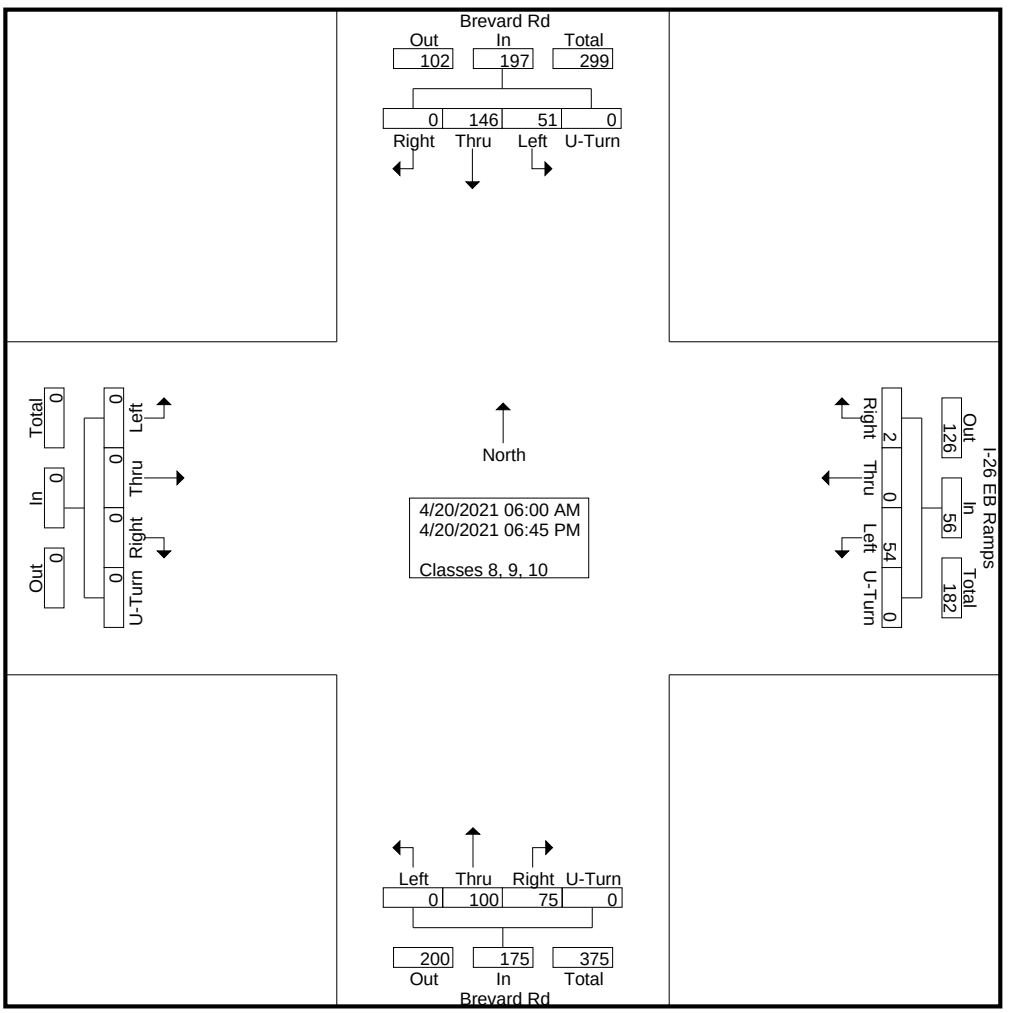

DocuSign Envelope ID: 5C03745C-4B01-4834-A65D-B77F558A4F46

Quality Counts

920 Blairhill Rd, Ste B-106
Charlotte, NC 28217

File Name : 15411702 - Brevard Rd -- I-26 EB Ramps
Site Code : 15411702
Start Date : 4/20/2021
Page No : 3

	Brevard Rd Southbound					I-26 EB Ramps Westbound					Brevard Rd Northbound					Eastbound					
Start Time	Left	Thru	Right	U-Turn	App. Total	Left	Thru	Right	U-Turn	App. Total	Left	Thru	Right	U-Turn	App. Total	Left	Thru	Right	U-Turn	App. Total	Int. Total
Peak Hour Analysis From 06:00 AM to 11:45 AM - Peak 1 of 1																					
Peak Hour for Entire Intersection Begins at 09:15 AM																					
09:15 AM	1	**7**	0	0	**8**	1	0	0	0	1	0	**7**	1	0	8	0	0	0	0	0	17
09:30 AM	**4**	4	0	0	8	**4**	0	**1**	0	**5**	0	4	3	0	7	0	0	0	0	0	**20**
09:45 AM	2	4	0	0	6	0	0	0	0	0	0	5	**4**	0	**9**	0	0	0	0	0	15
10:00 AM	1	6	0	0	7	1	0	0	0	1	0	2	0	0	2	0	0	0	0	0	10
Total Volume	8	21	0	0	29	6	0	1	0	7	0	18	8	0	26	0	0	0	0	0	62
% App. Total	27.6	72.4	0	0		85.7	0	14.3	0		0	69.2	30.8	0		0	0	0	0		
PHF	.500	.750	.000	.000	.906	.375	.000	.250	.000	.350	.000	.643	.500	.000	.722	.000	.000	.000	.000	.000	.775

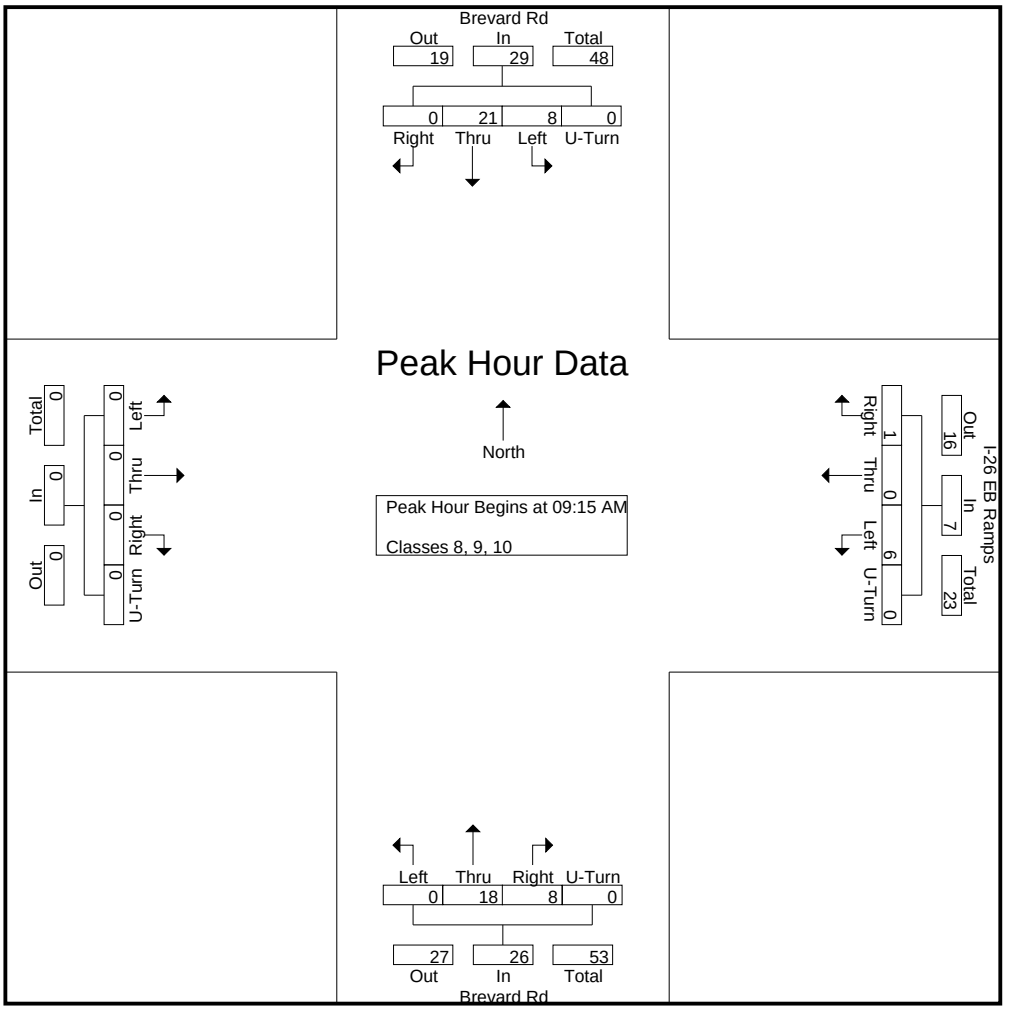

DocuSign Envelope ID: 5C03745C-4B01-4834-A65D-B77F558A4F46

Quality Counts

920 Blairhill Rd, Ste B-106
Charlotte, NC 28217

File Name : 15411702 - Brevard Rd -- I-26 EB Ramps
Site Code : 15411702
Start Date : 4/20/2021
Page No : 4

	Brevard Rd Southbound					I-26 EB Ramps Westbound					Brevard Rd Northbound					Eastbound					
Start Time	Left	Thru	Right	U-Turn	App. Total	Left	Thru	Right	U-Turn	App. Total	Left	Thru	Right	U-Turn	App. Total	Left	Thru	Right	U-Turn	App. Total	Int. Total
Peak Hour Analysis From 12:00 PM to 06:45 PM - Peak 1 of 1																					
Peak Hour for Entire Intersection Begins at 12:15 PM																					
12:15 PM	1	3	0	0	4	2	0	0	0	2	0	**6**	0	0	**6**	0	0	0	0	0	12
12:30 PM	**2**	3	0	0	5	0	0	0	0	0	0	2	2	0	4	0	0	0	0	0	9
12:45 PM	1	3	0	0	4	**5**	0	0	0	**5**	0	3	1	0	4	0	0	0	0	0	13
01:00 PM	1	**11**	0	0	**12**	1	0	0	0	1	0	2	**3**	0	5	0	0	0	0	0	**18**
Total Volume	5	20	0	0	25	8	0	0	0	8	0	13	6	0	19	0	0	0	0	0	52
% App. Total	20	80	0	0		100	0	0	0		0	68.4	31.6	0		0	0	0	0		
PHF	.625	.455	.000	.000	.521	.400	.000	.000	.000	.400	.000	.542	.500	.000	.792	.000	.000	.000	.000	.000	.722

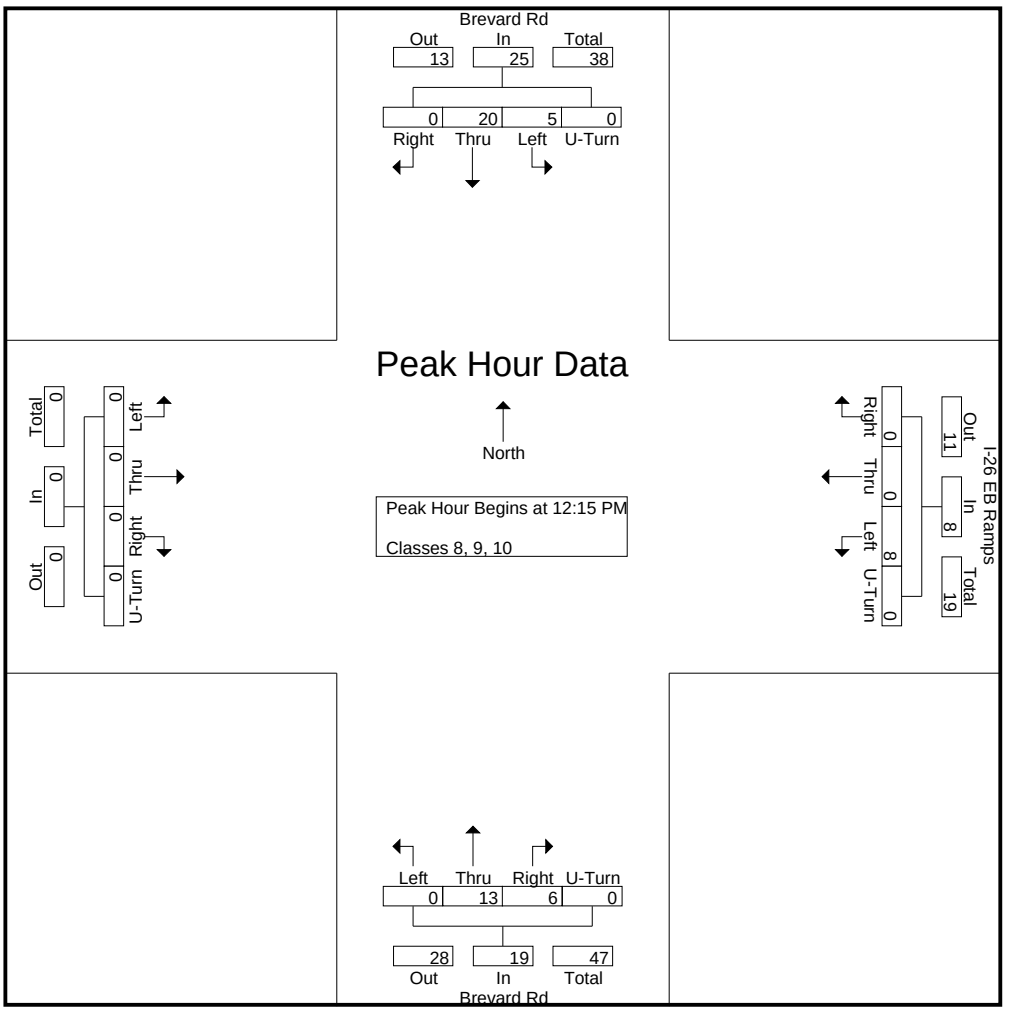

DocuSign Envelope ID: 5C03745C-4B01-4834-A65D-B77F558A4F46

Quality Counts

920 Blairhill Rd, Ste B-106
Charlotte, NC 28217

File Name : 15411702 - Brevard Rd -- I-26 EB Ramps
Site Code : 15411702
Start Date : 4/20/2021
Page No : 1

Groups Printed- Classes 11, 12, 13

	Brevard Rd Southbound					I-26 EB Ramps Westbound					Brevard Rd Northbound					Eastbound					
Start Time	Left	Thru	Right	U-Turn	App. Total	Left	Thru	Right	U-Turn	App. Total	Left	Thru	Right	U-Turn	App. Total	Left	Thru	Right	U-Turn	App. Total	Int. Total
06:00 AM	0	0	0	0	0	0	0	0	0	0	0	0	0	0	0	0	0	0	0	0	0
06:15 AM	0	0	0	0	0	0	0	0	0	0	0	0	0	0	0	0	0	0	0	0	0
06:30 AM	0	0	0	0	0	0	0	0	0	0	0	0	0	0	0	0	0	0	0	0	0
06:45 AM	0	0	0	0	0	0	0	0	0	0	0	0	0	0	0	0	0	0	0	0	0
Total	0	0	0	0	0	0	0	0	0	0	0	0	0	0	0	0	0	0	0	0	0
07:00 AM	0	0	0	0	0	0	0	0	0	0	0	0	0	0	0	0	0	0	0	0	0
07:15 AM	0	0	0	0	0	0	0	0	0	0	0	0	0	0	0	0	0	0	0	0	0
07:30 AM	0	0	0	0	0	0	0	0	0	0	0	0	0	0	0	0	0	0	0	0	0
07:45 AM	0	0	0	0	0	0	0	0	0	0	0	0	0	0	0	0	0	0	0	0	0
Total	0	0	0	0	0	0	0	0	0	0	0	0	0	0	0	0	0	0	0	0	0
08:00 AM	0	0	0	0	0	0	0	0	0	0	0	0	0	0	0	0	0	0	0	0	0
08:15 AM	0	0	0	0	0	0	0	0	0	0	0	0	0	0	0	0	0	0	0	0	0
08:30 AM	0	0	0	0	0	0	0	0	0	0	0	0	0	0	0	0	0	0	0	0	0
08:45 AM	0	0	0	0	0	0	0	0	0	0	0	0	0	0	0	0	0	0	0	0	0
Total	0	0	0	0	0	0	0	0	0	0	0	0	0	0	0	0	0	0	0	0	0
09:00 AM	0	0	0	0	0	0	0	0	0	0	0	0	0	0	0	0	0	0	0	0	0
09:15 AM	0	0	0	0	0	0	0	0	0	0	0	0	0	0	0	0	0	0	0	0	0
09:30 AM	0	0	0	0	0	0	0	0	0	0	0	0	0	0	0	0	0	0	0	0	0
09:45 AM	0	0	0	0	0	0	0	0	0	0	0	0	0	0	0	0	0	0	0	0	0
Total	0	0	0	0	0	0	0	0	0	0	0	0	0	0	0	0	0	0	0	0	0
10:00 AM	0	0	0	0	0	0	0	0	0	0	0	0	0	0	0	0	0	0	0	0	0
10:15 AM	0	0	0	0	0	0	0	0	0	0	0	0	0	0	0	0	0	0	0	0	0
10:30 AM	0	0	0	0	0	0	0	0	0	0	0	0	0	0	0	0	0	0	0	0	0
10:45 AM	0	0	0	0	0	0	0	0	0	0	0	0	0	0	0	0	0	0	0	0	0
Total	0	0	0	0	0	0	0	0	0	0	0	0	0	0	0	0	0	0	0	0	0
11:00 AM	0	0	0	0	0	0	0	0	0	0	0	0	0	0	0	0	0	0	0	0	0
11:15 AM	0	0	0	0	0	0	0	0	0	0	0	0	0	0	0	0	0	0	0	0	0
11:30 AM	0	0	0	0	0	0	0	0	0	0	0	0	0	0	0	0	0	0	0	0	0
11:45 AM	0	0	0	0	0	0	0	0	0	0	0	0	0	0	0	0	0	0	0	0	0
Total	0	0	0	0	0	0	0	0	0	0	0	0	0	0	0	0	0	0	0	0	0
12:00 PM	0	0	0	0	0	0	0	0	0	0	0	0	0	0	0	0	0	0	0	0	0
12:15 PM	0	0	0	0	0	0	0	0	0	0	0	0	0	0	0	0	0	0	0	0	0
12:30 PM	0	0	0	0	0	0	0	0	0	0	0	0	0	0	0	0	0	0	0	0	0
12:45 PM	0	0	0	0	0	0	0	0	0	0	0	0	0	0	0	0	0	0	0	0	0
Total	0	0	0	0	0	0	0	0	0	0	0	0	0	0	0	0	0	0	0	0	0
01:00 PM	0	0	0	0	0	0	0	0	0	0	0	0	0	0	0	0	0	0	0	0	0
01:15 PM	0	0	0	0	0	0	0	0	0	0	0	0	0	0	0	0	0	0	0	0	0
01:30 PM	0	0	0	0	0	0	0	0	0	0	0	0	0	0	0	0	0	0	0	0	0
01:45 PM	0	0	0	0	0	0	0	0	0	0	0	0	0	0	0	0	0	0	0	0	0
Total	0	0	0	0	0	0	0	0	0	0	0	0	0	0	0	0	0	0	0	0	0
02:00 PM	0	0	0	0	0	0	0	0	0	0	0	0	0	0	0	0	0	0	0	0	0
02:15 PM	0	0	0	0	0	0	0	0	0	0	0	0	0	0	0	0	0	0	0	0	0
02:30 PM	0	0	0	0	0	0	0	0	0	0	0	0	0	0	0	0	0	0	0	0	0
02:45 PM	0	0	0	0	0	0	0	0	0	0	0	0	0	0	0	0	0	0	0	0	0
Total	0	0	0	0	0	0	0	0	0	0	0	0	0	0	0	0	0	0	0	0	0
03:00 PM	0	0	0	0	0	0	0	0	0	0	0	0	0	0	0	0	0	0	0	0	0
03:15 PM	0	0	0	0	0	0	0	0	0	0	0	0	0	0	0	0	0	0	0	0	0
03:30 PM	0	0	0	0	0	0	0	0	0	0	0	0	0	0	0	0	0	0	0	0	0

DocuSign Envelope ID: 5C03745C-4B01-4834-A65D-B77F558A4F46

Quality Counts

920 Blairhill Rd, Ste B-106
Charlotte, NC 28217

File Name : 15411702 - Brevard Rd -- I-26 EB Ramps
Site Code : 15411702
Start Date : 4/20/2021
Page No : 2

Groups Printed- Classes 11, 12, 13

	Brevard Rd Southbound					I-26 EB Ramps Westbound					Brevard Rd Northbound					Eastbound					
Start Time	Left	Thru	Right	U-Turn	App. Total	Left	Thru	Right	U-Turn	App. Total	Left	Thru	Right	U-Turn	App. Total	Left	Thru	Right	U-Turn	App. Total	Int. Total
03:45 PM	0	0	0	0	0	0	0	0	0	0	0	0	0	0	0	0	0	0	0	0	0
Total	0	0	0	0	0	0	0	0	0	0	0	0	0	0	0	0	0	0	0	0	0
04:00 PM	0	0	0	0	0	0	0	0	0	0	0	0	0	0	0	0	0	0	0	0	0
04:15 PM	0	0	0	0	0	0	0	0	0	0	0	0	0	0	0	0	0	0	0	0	0
04:30 PM	0	0	0	0	0	0	0	0	0	0	0	0	0	0	0	0	0	0	0	0	0
04:45 PM	0	0	0	0	0	0	0	0	0	0	0	0	0	0	0	0	0	0	0	0	0
Total	0	0	0	0	0	0	0	0	0	0	0	0	0	0	0	0	0	0	0	0	0
05:00 PM	0	0	0	0	0	0	0	0	0	0	0	0	0	0	0	0	0	0	0	0	0
05:15 PM	0	0	0	0	0	0	0	0	0	0	0	0	0	0	0	0	0	0	0	0	0
05:30 PM	0	0	0	0	0	0	0	0	0	0	0	0	0	0	0	0	0	0	0	0	0
05:45 PM	0	0	0	0	0	0	0	0	0	0	0	0	0	0	0	0	0	0	0	0	0
Total	0	0	0	0	0	0	0	0	0	0	0	0	0	0	0	0	0	0	0	0	0
06:00 PM	0	0	0	0	0	0	0	0	0	0	0	0	0	0	0	0	0	0	0	0	0
06:15 PM	0	0	0	0	0	0	0	0	0	0	0	0	0	0	0	0	0	0	0	0	0
06:30 PM	0	0	0	0	0	0	0	0	0	0	0	0	0	0	0	0	0	0	0	0	0
06:45 PM	0	0	0	0	0	0	0	0	0	0	0	0	0	0	0	0	0	0	0	0	0
Total	0	0	0	0	0	0	0	0	0	0	0	0	0	0	0	0	0	0	0	0	0
Grand Total	0	0	0	0	0	0	0	0	0	0	0	0	0	0	0	0	0	0	0	0	0
Apprch %	0	0	0	0		0	0	0	0		0	0	0	0		0	0	0	0		
Total %																					

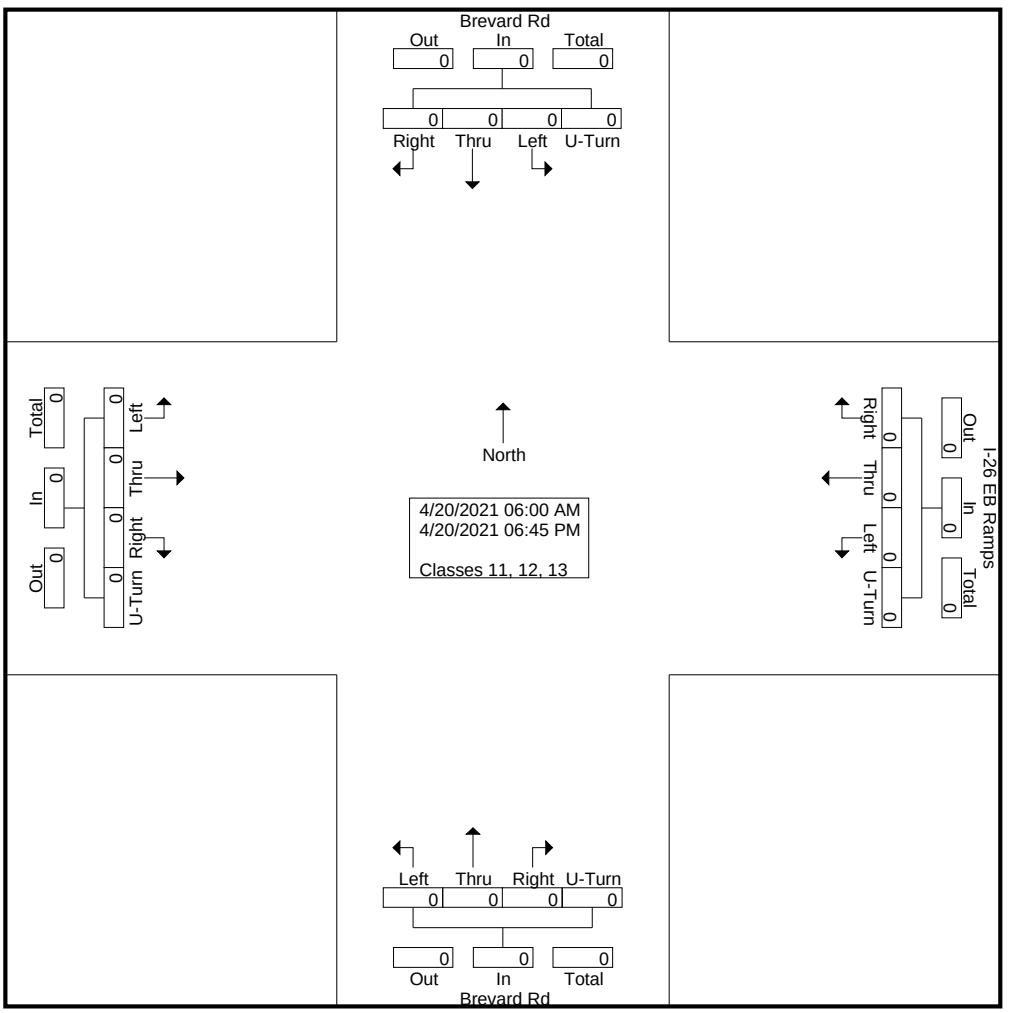

DocuSign Envelope ID: 5C03745C-4B01-4834-A65D-B77F558A4F46

Quality Counts

920 Blairhill Rd, Ste B-106
Charlotte, NC 28217

File Name : 15411702 - Brevard Rd -- I-26 EB Ramps
Site Code : 15411702
Start Date : 4/20/2021
Page No : 3

	Brevard Rd Southbound					I-26 EB Ramps Westbound					Brevard Rd Northbound					Eastbound					
Start Time	Left	Thru	Right	U-Turn	App. Total	Left	Thru	Right	U-Turn	App. Total	Left	Thru	Right	U-Turn	App. Total	Left	Thru	Right	U-Turn	App. Total	Int. Total
Peak Hour Analysis From 06:00 AM to 11:45 AM - Peak 1 of 1																					
Peak Hour for Entire Intersection Begins at 06:00 AM																					
06:00 AM	0	0	0	0	0	0	0	0	0	0	0	0	0	0	0	0	0	0	0	0	0
06:15 AM	0	0	0	0	0	0	0	0	0	0	0	0	0	0	0	0	0	0	0	0	0
06:30 AM	0	0	0	0	0	0	0	0	0	0	0	0	0	0	0	0	0	0	0	0	0
06:45 AM	0	0	0	0	0	0	0	0	0	0	0	0	0	0	0	0	0	0	0	0	0
Total Volume	0	0	0	0	0	0	0	0	0	0	0	0	0	0	0	0	0	0	0	0	0
% App. Total	0	0	0	0		0	0	0	0		0	0	0	0		0	0	0	0		
PHF	.000	.000	.000	.000	.000	.000	.000	.000	.000	.000	.000	.000	.000	.000	.000	.000	.000	.000	.000	.000	.000

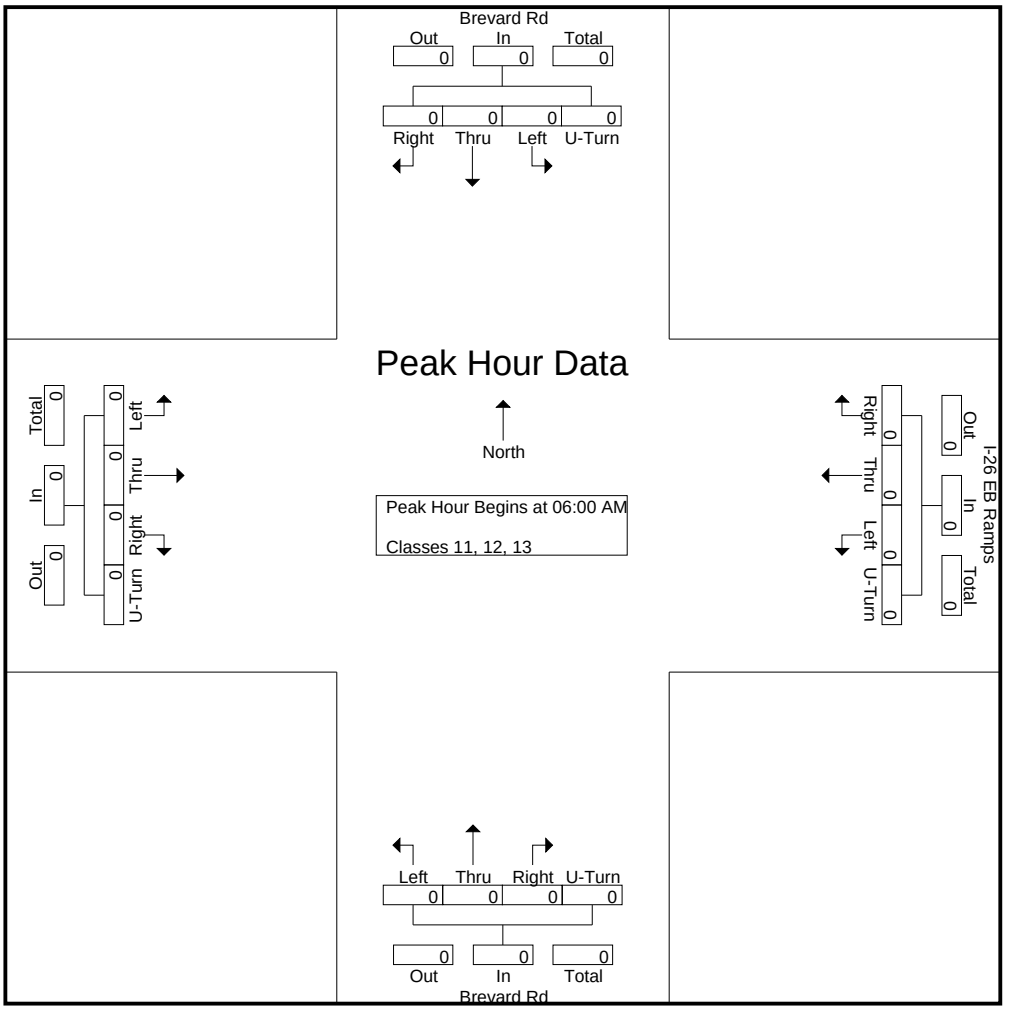

DocuSign Envelope ID: 5C03745C-4B01-4834-A65D-B77F558A4F46

Quality Counts

920 Blairhill Rd, Ste B-106
Charlotte, NC 28217

File Name : 15411702 - Brevard Rd -- I-26 EB Ramps
Site Code : 15411702
Start Date : 4/20/2021
Page No : 4

	Brevard Rd Southbound					I-26 EB Ramps Westbound					Brevard Rd Northbound					Eastbound					
Start Time	Left	Thru	Right	U-Turn	App. Total	Left	Thru	Right	U-Turn	App. Total	Left	Thru	Right	U-Turn	App. Total	Left	Thru	Right	U-Turn	App. Total	Int. Total
Peak Hour Analysis From 12:00 PM to 06:45 PM - Peak 1 of 1																					
Peak Hour for Entire Intersection Begins at 12:00 PM																					
12:00 PM	0	0	0	0	0	0	0	0	0	0	0	0	0	0	0	0	0	0	0	0	0
12:15 PM	0	0	0	0	0	0	0	0	0	0	0	0	0	0	0	0	0	0	0	0	0
12:30 PM	0	0	0	0	0	0	0	0	0	0	0	0	0	0	0	0	0	0	0	0	0
12:45 PM	0	0	0	0	0	0	0	0	0	0	0	0	0	0	0	0	0	0	0	0	0
Total Volume	0	0	0	0	0	0	0	0	0	0	0	0	0	0	0	0	0	0	0	0	0
% App. Total	0	0	0	0		0	0	0	0		0	0	0	0		0	0	0	0		
PHF	.000	.000	.000	.000	.000	.000	.000	.000	.000	.000	.000	.000	.000	.000	.000	.000	.000	.000	.000	.000	.000

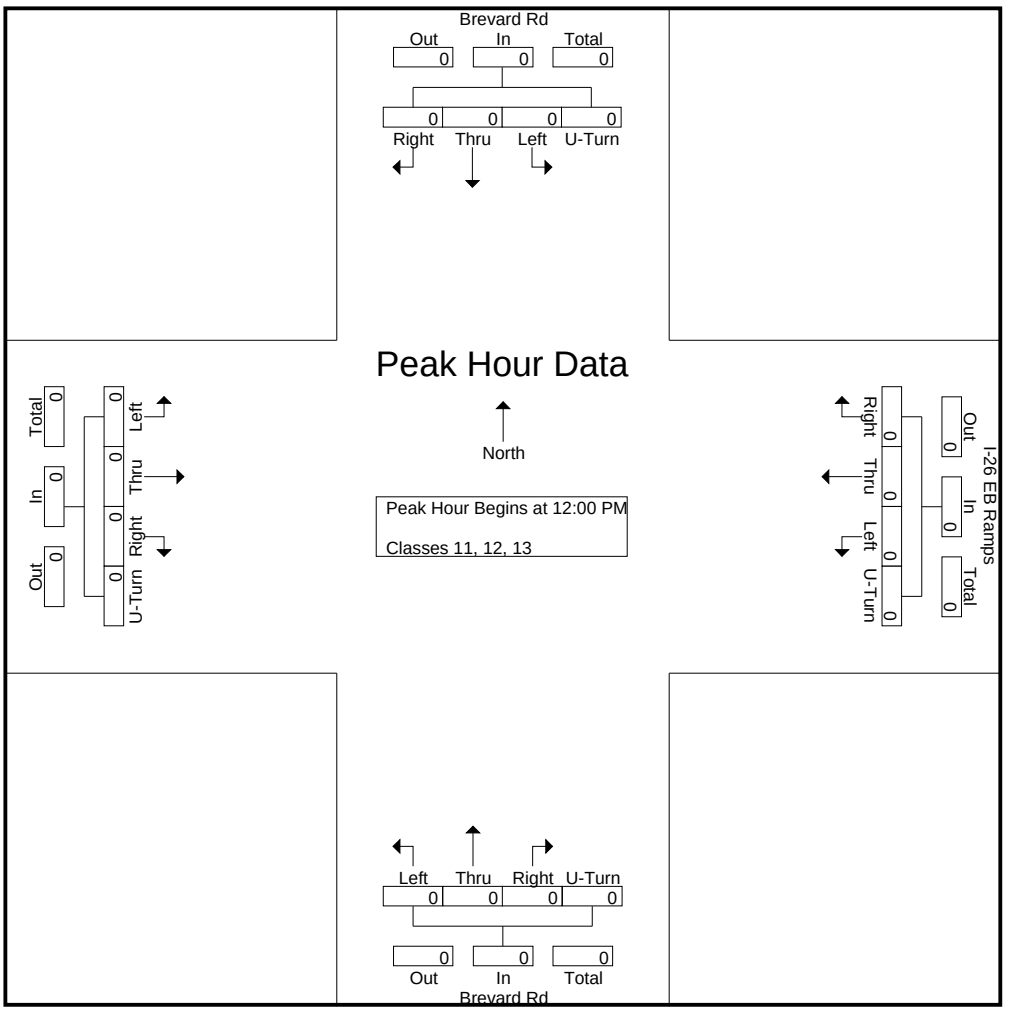

DocuSign Envelope ID: 5C03745C-4B01-4834-A65D-B77F558A4F46

Quality Counts

920 Blairhill Rd, Ste B-106
Charlotte, NC 28217

File Name : 15411702 - Brevard Rd -- I-26 EB Ramps
Site Code : 15411702
Start Date : 4/20/2021
Page No : 1

Groups Printed- Bikes, Peds

	Brevard Rd Southbound					I-26 EB Ramps Westbound					Brevard Rd Northbound					Eastbound					
Start Time	Left	Thru	Right	Peds	App. Total	Left	Thru	Right	Peds	App. Total	Left	Thru	Right	Peds	App. Total	Left	Thru	Right	Peds	App. Total	Int. Total
06:00 AM	0	0	0	0	0	0	0	0	0	0	0	0	0	0	0	0	0	0	0	0	0
06:15 AM	0	0	0	0	0	0	0	0	0	0	0	0	0	0	0	0	0	0	0	0	0
06:30 AM	0	0	0	0	0	0	0	0	0	0	0	0	0	0	0	0	0	0	0	0	0
06:45 AM	0	0	0	0	0	0	0	0	0	0	0	0	0	0	0	0	0	0	0	0	0
Total	0	0	0	0	0	0	0	0	0	0	0	0	0	0	0	0	0	0	0	0	0
07:00 AM	0	0	0	0	0	0	0	0	0	0	0	0	0	0	0	0	0	0	0	0	0
07:15 AM	0	0	0	0	0	1	0	0	0	1	0	0	0	0	0	0	0	0	0	0	1
07:30 AM	0	0	0	0	0	0	0	0	0	0	0	0	0	0	0	0	0	0	0	0	0
07:45 AM	0	0	0	0	0	0	0	0	0	0	0	0	0	0	0	0	0	0	0	0	0
Total	0	0	0	0	0	1	0	0	0	1	0	0	0	0	0	0	0	0	0	0	1
08:00 AM	0	0	0	0	0	0	0	0	0	0	0	0	0	0	0	0	0	0	0	0	0
08:15 AM	0	0	0	0	0	0	0	0	0	0	0	0	0	0	0	0	0	0	0	0	0
08:30 AM	0	0	0	0	0	0	0	0	0	0	0	0	0	0	0	0	0	0	0	0	0
08:45 AM	0	0	0	0	0	0	0	0	0	0	0	0	0	0	0	0	0	0	0	0	0
Total	0	0	0	0	0	0	0	0	0	0	0	0	0	0	0	0	0	0	0	0	0
09:00 AM	0	0	0	0	0	0	0	0	0	0	0	0	0	0	0	0	0	0	0	0	0
09:15 AM	0	0	0	0	0	0	0	0	0	0	0	0	0	0	0	0	0	0	0	0	0
09:30 AM	0	1	0	0	1	0	0	0	0	0	0	0	0	0	0	0	0	0	0	0	1
09:45 AM	0	0	0	0	0	0	0	0	0	0	0	0	0	0	0	0	0	0	0	0	0
Total	0	1	0	0	1	0	0	0	0	0	0	0	0	0	0	0	0	0	0	0	1
10:00 AM	0	0	0	0	0	0	0	0	0	0	0	0	0	0	0	0	0	0	0	0	0
10:15 AM	0	0	0	0	0	0	0	0	0	0	0	0	0	0	0	0	0	0	0	0	0
10:30 AM	0	0	0	0	0	0	0	0	1	1	0	0	0	0	0	0	0	0	0	0	1
10:45 AM	0	0	0	0	0	0	0	0	0	0	0	0	0	0	0	0	0	0	0	0	0
Total	0	0	0	0	0	0	0	0	1	1	0	0	0	0	0	0	0	0	0	0	1
11:00 AM	0	0	0	0	0	0	0	0	0	0	0	0	0	0	0	0	0	0	0	0	0
11:15 AM	0	0	0	0	0	0	0	0	0	0	0	0	0	0	0	0	0	0	0	0	0
11:30 AM	0	0	0	0	0	0	0	0	1	1	0	0	0	0	0	0	0	0	1	1	2
11:45 AM	0	0	0	0	0	0	0	0	0	0	0	0	0	0	0	0	0	0	0	0	0
Total	0	0	0	0	0	0	0	0	1	1	0	0	0	0	0	0	0	0	1	1	2
12:00 PM	0	0	0	0	0	0	0	0	0	0	0	0	0	0	0	0	0	0	1	1	1
12:15 PM	0	0	0	0	0	0	0	0	0	0	0	0	0	0	0	0	0	0	0	0	0
12:30 PM	0	0	0	0	0	0	0	0	0	0	0	0	0	0	0	0	0	0	0	0	0
12:45 PM	0	0	0	0	0	0	0	0	0	0	0	0	0	0	0	0	0	0	0	0	0
Total	0	0	0	0	0	0	0	0	0	0	0	0	0	0	0	0	0	0	1	1	1
01:00 PM	0	0	0	0	0	0	0	0	0	0	0	0	0	0	0	0	0	0	0	0	0
01:15 PM	0	0	0	0	0	0	0	0	0	0	0	0	0	0	0	0	0	0	0	0	0
01:30 PM	0	0	0	0	0	0	0	0	0	0	0	0	0	0	0	0	0	0	0	0	0
01:45 PM	0	0	0	0	0	0	0	0	0	0	0	0	0	0	0	0	0	0	0	0	0
Total	0	0	0	0	0	0	0	0	0	0	0	0	0	0	0	0	0	0	0	0	0
02:00 PM	0	0	0	0	0	0	0	0	0	0	0	0	0	0	0	0	0	0	0	0	0
02:15 PM	0	0	0	0	0	0	0	0	0	0	0	0	0	0	0	0	0	0	0	0	0
02:30 PM	0	0	0	0	0	0	0	0	0	0	0	0	0	0	0	0	0	0	0	0	0
02:45 PM	0	0	0	0	0	0	0	0	0	0	0	0	0	0	0	0	0	0	0	0	0
Total	0	0	0	0	0	0	0	0	0	0	0	0	0	0	0	0	0	0	0	0	0
03:00 PM	0	0	0	0	0	0	0	0	0	0	0	0	0	0	0	0	0	0	0	0	0
03:15 PM	0	0	0	0	0	0	0	0	0	0	0	0	0	0	0	0	0	0	0	0	0
03:30 PM	0	0	0	0	0	0	0	0	0	0	0	0	0	0	0	0	0	0	0	0	0

DocuSign Envelope ID: 5C03745C-4B01-4834-A65D-B77F558A4F46

Quality Counts

920 Blairhill Rd, Ste B-106
Charlotte, NC 28217

File Name : 15411702 - Brevard Rd -- I-26 EB Ramps
Site Code : 15411702
Start Date : 4/20/2021

Groups Printed- Bikes, Peds

	Brevard Rd Southbound					I-26 EB Ramps Westbound					Brevard Rd Northbound					Eastbound					
Start Time	Left	Thru	Right	Peds	App. Total	Left	Thru	Right	Peds	App. Total	Left	Thru	Right	Peds	App. Total	Left	Thru	Right	Peds	App. Total	Int. Total
03:45 PM	0	0	0	0	0	0	0	0	0	0	0	0	0	0	0	0	0	0	0	0	0
Total	0	0	0	0	0	0	0	0	0	0	0	0	0	0	0	0	0	0	0	0	0
04:00 PM	0	0	0	0	0	0	0	0	1	1	0	0	0	0	0	0	0	0	0	0	1
04:15 PM	0	0	0	0	0	0	0	0	0	0	0	1	0	0	1	0	0	0	0	0	1
04:30 PM	0	0	0	0	0	0	0	0	0	0	0	0	0	0	0	0	0	0	0	0	0
04:45 PM	0	0	0	0	0	0	0	0	0	0	0	0	0	0	0	0	0	0	0	0	0
Total	0	0	0	0	0	0	0	0	1	1	0	1	0	0	1	0	0	0	0	0	2
05:00 PM	0	0	0	0	0	0	0	0	0	0	0	0	0	0	0	0	0	0	0	0	0
05:15 PM	0	0	0	0	0	0	0	0	0	0	0	0	0	0	0	0	0	0	0	0	0
05:30 PM	0	0	0	0	0	0	0	0	0	0	0	1	0	0	1	0	0	0	0	0	1
05:45 PM	0	0	0	0	0	0	0	0	0	0	0	0	0	0	0	0	0	0	0	0	0
Total	0	0	0	0	0	0	0	0	0	0	0	1	0	0	1	0	0	0	0	0	1
06:00 PM	0	0	0	0	0	0	0	0	0	0	0	1	0	0	1	0	0	0	0	0	1
06:15 PM	0	0	0	0	0	0	0	0	0	0	0	0	0	0	0	0	0	0	0	0	0
06:30 PM	0	0	0	0	0	0	0	0	0	0	0	0	0	0	0	0	0	0	0	0	0
06:45 PM	0	0	0	0	0	0	0	0	0	0	0	0	0	0	0	0	0	0	0	0	0
Total	0	0	0	0	0	0	0	0	0	0	0	1	0	0	1	0	0	0	0	0	1
Grand Total	0	1	0	0	1	1	0	0	3	4	0	3	0	0	3	0	0	0	2	2	10
Apprch %	0	100	0	0		25	0	0	75		0	100	0	0		0	0	0	100		
Total %	0	10	0	0	10	10	0	0	30	40	0	30	0	0	30	0	0	0	20	20	

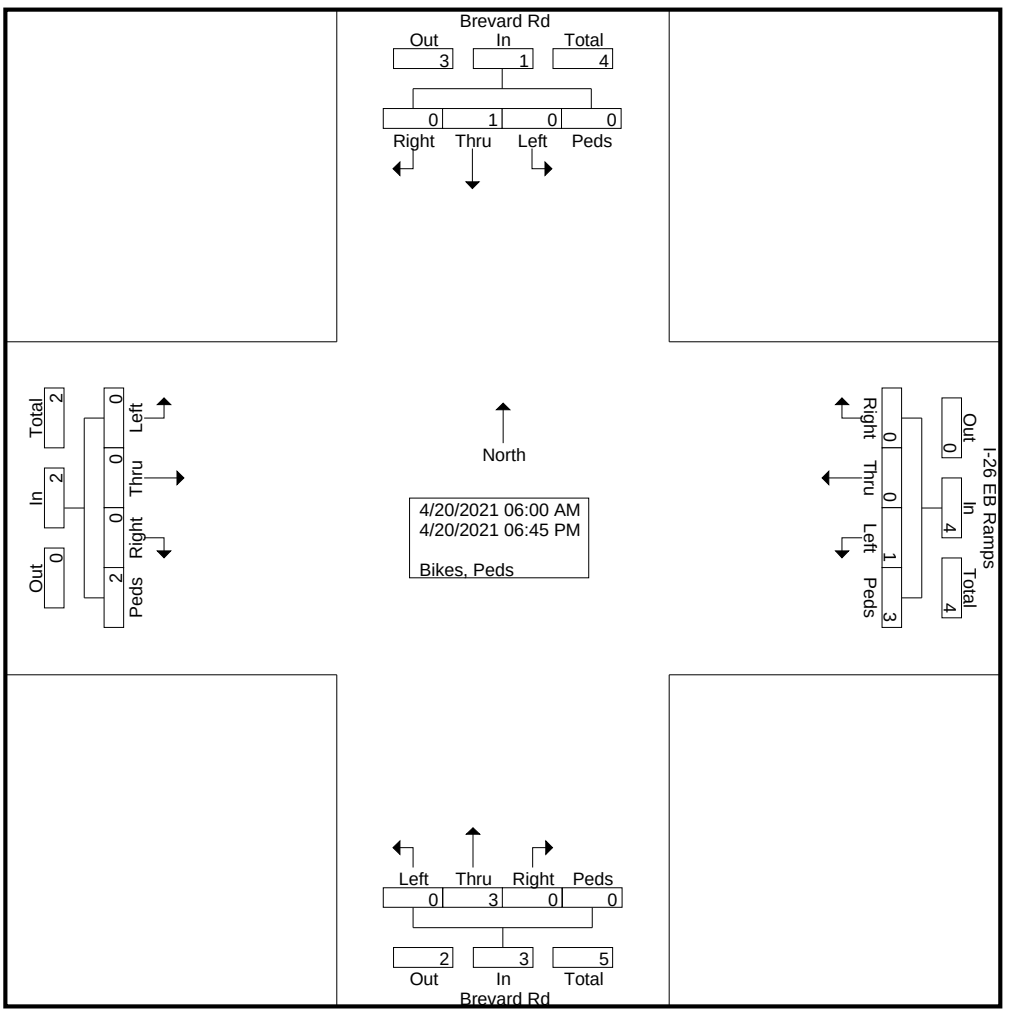

DocuSign Envelope ID: 5C03745C-4B01-4834-A65D-B77F558A4F46

Quality Counts

920 Blairhill Rd, Ste B-106
Charlotte, NC 28217

File Name : 15411702 - Brevard Rd -- I-26 EB Ramps
Site Code : 15411702
Start Date : 4/20/2021
Page No : 3

	Brevard Rd Southbound					I-26 EB Ramps Westbound					Brevard Rd Northbound					Eastbound					
Start Time	Left	Thru	Right	Peds	App. Total	Left	Thru	Right	Peds	App. Total	Left	Thru	Right	Peds	App. Total	Left	Thru	Right	Peds	App. Total	Int. Total
Peak Hour Analysis From 06:00 AM to 11:45 AM - Peak 1 of 1																					
Peak Hour for Entire Intersection Begins at 10:45 AM																					
10:45 AM	0	0	0	0	0	0	0	0	0	0	0	0	0	0	0	0	0	0	0	0	0
11:00 AM	0	0	0	0	0	0	0	0	0	0	0	0	0	0	0	0	0	0	0	0	0
11:15 AM	0	0	0	0	0	0	0	0	0	0	0	0	0	0	0	0	0	0	0	0	0
11:30 AM	0	0	0	0	0	0	0	0	**1**	**1**	0	0	0	0	0	0	0	0	**1**	**1**	**2**
Total Volume	0	0	0	0	0	0	0	0	1	1	0	0	0	0	0	0	0	0	1	1	2
% App. Total	0	0	0	0		0	0	0	100		0	0	0	0		0	0	0	100		
PHF	.000	.000	.000	.000	.000	.000	.000	.000	.250	.250	.000	.000	.000	.000	.000	.000	.000	.000	.250	.250	.250

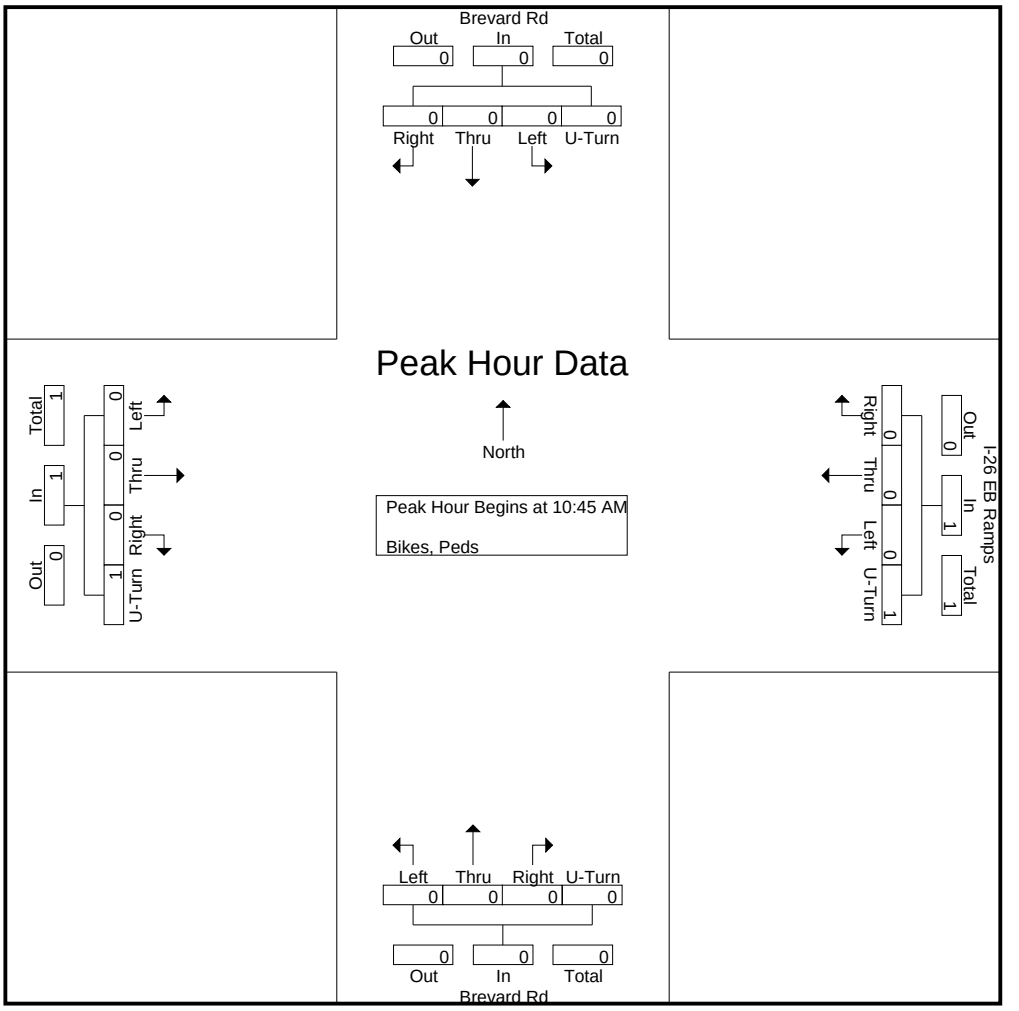

DocuSign Envelope ID: 5C03745C-4B01-4834-A65D-B77F558A4F46

Quality Counts

920 Blairhill Rd, Ste B-106
Charlotte, NC 28217

File Name : 15411702 - Brevard Rd -- I-26 EB Ramps
Site Code : 15411702
Start Date : 4/20/2021
Page No : 4

	Brevard Rd Southbound					I-26 EB Ramps Westbound					Brevard Rd Northbound					Eastbound					
Start Time	Left	Thru	Right	Peds	App. Total	Left	Thru	Right	Peds	App. Total	Left	Thru	Right	Peds	App. Total	Left	Thru	Right	Peds	App. Total	Int. Total
Peak Hour Analysis From 12:00 PM to 06:45 PM - Peak 1 of 1																					
Peak Hour for Entire Intersection Begins at 03:30 PM																					
03:30 PM	0	0	0	0	0	0	0	0	0	0	0	0	0	0	0	0	0	0	0	0	0
03:45 PM	0	0	0	0	0	0	0	0	0	0	0	0	0	0	0	0	0	0	0	0	0
04:00 PM	0	0	0	0	0	0	0	0	**1**	**1**	0	0	0	0	0	0	0	0	0	0	**1**
04:15 PM	0	0	0	0	0	0	0	0	0	0	0	**1**	0	0	**1**	0	0	0	0	0	1
Total Volume	0	0	0	0	0	0	0	0	1	1	0	1	0	0	1	0	0	0	0	0	2
% App. Total	0	0	0	0		0	0	0	100		0	100	0	0		0	0	0	0		
PHF	.000	.000	.000	.000	.000	.000	.000	.000	.250	.250	.000	.250	.000	.000	.250	.000	.000	.000	.000	.000	.500

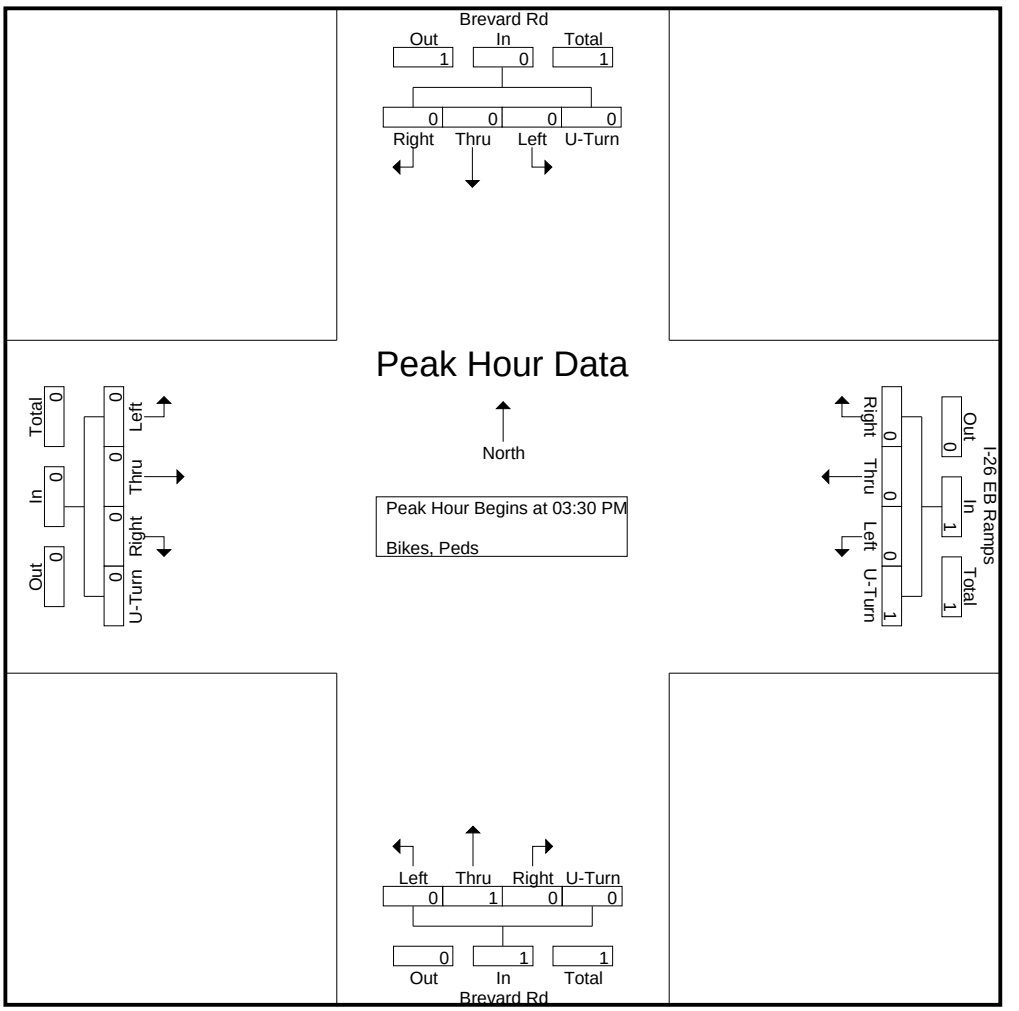

DocuSign Envelope ID: 5C03745C-4B01-4834-A65D-B77F558A4F46

QUALITY COUNTS LLC
920 Blairhill Rd, Suite 106, Charlotte, NC 28217
704.215.4616

Count Number: 15411703
County: Buncombe
City: Asheville
Division: 13

Location: I-26 Ramps & Long Shoals Rd
General Location Type: Intersection
Count Type: Turning Movement (Classification)
Count Start Date: 4/20/2021
Time: 6:00 AM – 7:00 PM
Volume: 37,668

Maximum Temperature: 69° F
Minimum Temperature: 40° F
Precipitation: 0.00 in
Snowfall: 0.0 in
Average Sky Cover: 0.2
Weather Conditions: Clear

1. **School in Session:** Yes
2. **Pedestrians Counted**: Yes
3. **Disabled Pedestrians Present**: No
   Description and Approaches Used: N/A
4. **Counted By**: Lucas Stephens
5. **Data Processor**: Jon B
6. **Signal Inventory**: N/A
7. **Data Collection Method**: Video/Count Board
8. **Equipment Operating Properly**: Yes
9. **Area Lighting Present**: Yes
10. **Nearest Roadway Stop Sign < 300 ft:** No
    If yes, list approaches: N/A
11. **Nearest Traffic Signal < 300 ft:** No
    If yes, list approaches: N/A
12. **At-Grade Railroad Crossing Present (<200 ft):** No
    If yes, list approaches & distance: N/A
13. **Other:**

↑ North



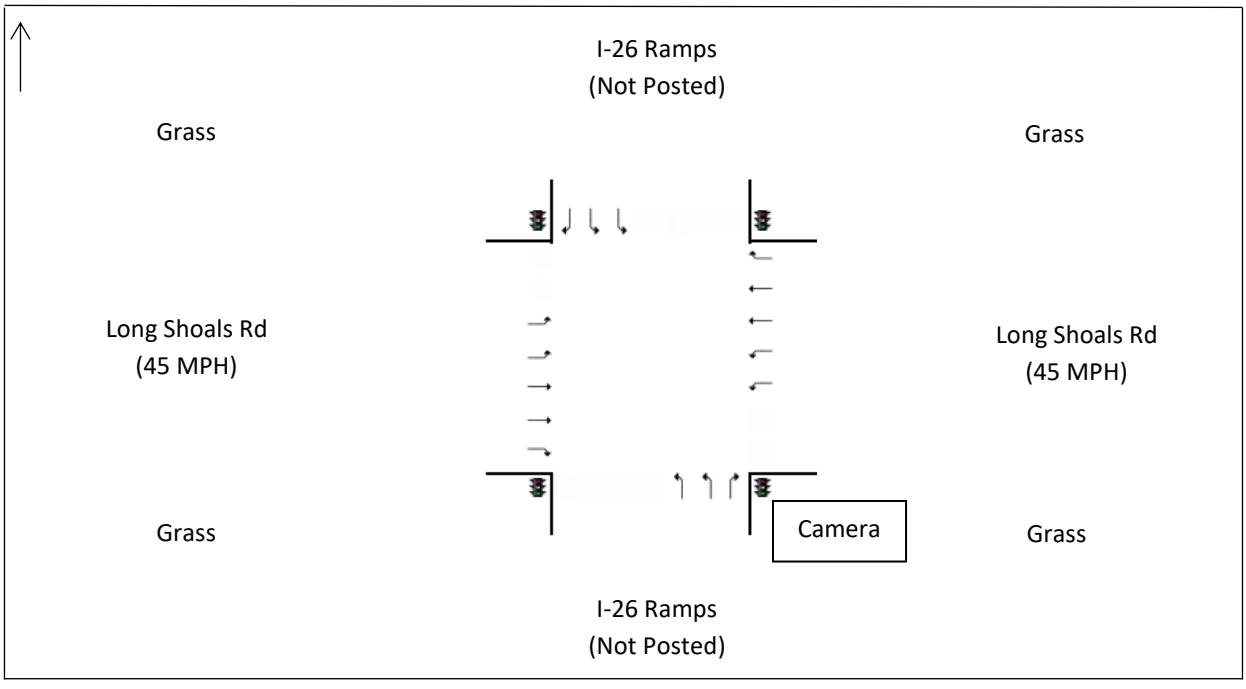

DocuSign Envelope ID: 5C03745C-4B01-4834-A65D-B77F558A4F46

Quality Counts

920 Blairhill Rd, Ste B-106
Charlotte, NC 28217

File Name : 15411703 - I-26 Ramps -- Long Shoals Rd
Site Code : 15411703
Start Date : 4/20/2021
Page No : 1

Groups Printed- Classes 1, 2, 3 - Classes 4, 5, 6, 7 - Classes 8, 9, 10 - Classes 11, 12, 13

	I-26 Ramps Southbound					Long Shoals Rd Westbound					I-26 Ramps Northbound					Long Shoals Rd Eastbound					
Start Time	Left	Thru	Right	U-Turn	App. Total	Left	Thru	Right	U-Turn	App. Total	Left	Thru	Right	U-Turn	App. Total	Left	Thru	Right	U-Turn	App. Total	Int. Total
06:00 AM	35	0	13	0	48	17	17	16	0	50	6	0	25	0	31	16	47	18	0	81	210
06:15 AM	48	0	13	1	62	35	34	30	0	99	23	0	32	0	55	24	57	16	0	97	313
06:30 AM	83	0	19	0	102	32	47	37	1	117	38	0	57	1	96	24	60	23	0	107	422
06:45 AM	141	0	32	0	173	26	60	47	0	133	48	0	67	0	115	24	72	30	0	126	547
Total	307	0	77	1	385	110	158	130	1	399	115	0	181	1	297	88	236	87	0	411	1492
07:00 AM	96	0	23	0	119	21	56	93	0	170	49	0	86	0	135	40	118	37	0	195	619
07:15 AM	160	0	42	0	202	47	110	104	0	261	41	0	107	1	149	56	175	34	0	265	877
07:30 AM	172	0	39	3	214	55	148	96	0	299	65	0	108	0	173	60	186	73	0	319	1005
07:45 AM	208	0	41	5	254	64	155	95	0	314	61	0	139	1	201	51	212	50	0	313	1082
Total	636	0	145	8	789	187	469	388	0	1044	216	0	440	2	658	207	691	194	0	1092	3583
08:00 AM	143	0	35	0	178	54	105	84	0	243	67	0	115	1	183	51	187	42	0	280	884
08:15 AM	107	0	37	1	145	47	108	93	0	248	42	0	94	3	139	38	158	53	0	249	781
08:30 AM	102	0	44	0	146	63	76	71	0	210	41	0	100	1	142	48	122	44	0	214	712
08:45 AM	120	0	40	4	164	59	110	76	0	245	35	0	97	1	133	30	148	45	0	223	765
Total	472	0	156	5	633	223	399	324	0	946	185	0	406	6	597	167	615	184	0	966	3142
09:00 AM	71	0	29	6	106	64	78	70	0	212	37	0	76	3	116	23	115	37	0	175	609
09:15 AM	84	0	26	0	110	59	100	71	0	230	21	0	79	3	103	21	127	39	0	187	630
09:30 AM	74	0	21	1	96	57	76	71	0	204	38	0	63	2	103	24	141	35	0	200	603
09:45 AM	97	0	22	3	122	54	84	72	0	210	40	0	83	1	124	29	121	33	0	183	639
Total	326	0	98	10	434	234	338	284	0	856	136	0	301	9	446	97	504	144	0	745	2481
10:00 AM	79	0	22	3	104	65	98	74	0	237	35	0	56	0	91	29	100	35	0	164	596
10:15 AM	83	0	27	5	115	59	84	74	0	217	25	0	74	3	102	20	109	17	0	146	580
10:30 AM	92	0	25	6	123	58	99	64	0	221	29	0	68	0	97	28	98	38	0	164	605
10:45 AM	99	0	24	2	125	43	100	71	0	214	34	0	72	1	107	22	112	40	0	174	620
Total	353	0	98	16	467	225	381	283	0	889	123	0	270	4	397	99	419	130	0	648	2401
11:00 AM	93	0	21	3	117	64	109	76	0	249	24	0	44	2	70	23	92	24	0	139	575
11:15 AM	62	0	20	3	85	45	127	99	0	271	31	0	63	0	94	24	139	31	0	194	644
11:30 AM	83	0	26	4	113	64	116	74	0	254	35	0	66	2	103	28	146	44	0	218	688
11:45 AM	87	0	27	4	118	60	115	80	1	256	28	0	75	1	104	16	149	34	0	199	677
Total	325	0	94	14	433	233	467	329	1	1030	118	0	248	5	371	91	526	133	0	750	2584
12:00 PM	90	0	33	3	126	58	137	88	1	284	34	0	78	3	115	22	175	46	0	243	768
12:15 PM	111	0	30	2	143	57	129	88	0	274	39	0	81	0	120	21	147	45	0	213	750
12:30 PM	81	0	32	6	119	52	144	86	0	282	39	0	92	2	133	23	132	51	0	206	740
12:45 PM	86	0	34	3	123	62	155	84	1	302	30	0	76	1	107	23	126	49	0	198	730
Total	368	0	129	14	511	229	565	346	2	1142	142	0	327	6	475	89	580	191	0	860	2988
01:00 PM	90	0	25	0	115	68	149	90	0	307	36	0	92	5	133	18	141	24	0	183	738
01:15 PM	99	0	22	2	123	48	158	80	0	286	34	0	87	1	122	24	151	45	0	220	751
01:30 PM	80	0	36	7	123	55	154	78	0	287	31	0	84	1	116	31	116	35	0	182	708
01:45 PM	102	0	35	1	138	65	139	71	0	275	37	0	70	4	111	20	146	52	0	218	742
Total	371	0	118	10	499	236	600	319	0	1155	138	0	333	11	482	93	554	156	0	803	2939
02:00 PM	109	0	30	1	140	73	123	86	0	282	39	0	68	0	107	30	121	36	0	187	716
02:15 PM	92	0	31	5	128	52	144	85	0	281	37	0	71	1	109	18	132	43	0	193	711
02:30 PM	112	0	37	4	153	51	141	97	0	289	40	0	67	0	107	38	177	50	0	265	814
02:45 PM	99	0	38	0	137	92	134	100	0	326	35	0	74	1	110	32	159	39	0	230	803
Total	412	0	136	10	558	268	542	368	0	1178	151	0	280	2	433	118	589	168	0	875	3044
03:00 PM	115	0	41	5	161	75	138	130	0	343	59	0	70	0	129	24	157	80	0	261	894
03:15 PM	100	0	41	1	142	77	180	147	0	404	29	0	91	1	121	25	135	54	0	214	881
03:30 PM	92	0	31	1	124	75	142	116	0	333	37	0	75	0	112	42	139	54	0	235	804

DocuSign Envelope ID: 5C03745C-4B01-4834-A65D-B77F558A4F46

Quality Counts

920 Blairhill Rd, Ste B-106
Charlotte, NC 28217

File Name : 15411703 - I-26 Ramps -- Long Shoals Rd
Site Code : 15411703
Start Date : 4/20/2021
Page No : 2

Groups Printed- Classes 1, 2, 3 - Classes 4, 5, 6, 7 - Classes 8, 9, 10 - Classes 11, 12, 13

	I-26 Ramps Southbound					Long Shoals Rd Westbound					I-26 Ramps Northbound					Long Shoals Rd Eastbound					
Start Time	Left	Thru	Right	U-Turn	App. Total	Left	Thru	Right	U-Turn	App. Total	Left	Thru	Right	U-Turn	App. Total	Left	Thru	Right	U-Turn	App. Total	Int. Total
03:45 PM	120	0	45	4	169	89	182	113	0	384	39	0	79	0	118	22	169	56	0	247	918
Total	427	0	158	11	596	316	642	506	0	1464	164	0	315	1	480	113	600	244	0	957	3497
04:00 PM	105	0	34	2	141	74	157	124	0	355	40	0	70	1	111	22	143	57	0	222	829
04:15 PM	117	0	57	2	176	92	182	82	0	356	53	0	87	0	140	29	159	46	0	234	906
04:30 PM	110	0	58	3	171	61	156	114	0	331	44	0	66	0	110	33	133	51	0	217	829
04:45 PM	97	0	41	2	140	104	180	83	0	367	39	0	64	1	104	18	153	54	0	225	836
Total	429	0	190	9	628	331	675	403	0	1409	176	0	287	2	465	102	588	208	0	898	3400
05:00 PM	82	0	46	1	129	84	165	114	0	363	35	0	84	1	120	51	157	64	0	272	884
05:15 PM	107	0	54	1	162	108	185	124	1	418	46	0	80	1	127	35	157	53	0	245	952
05:30 PM	100	0	44	1	145	93	180	95	0	368	35	0	75	2	112	33	139	45	0	217	842
05:45 PM	106	0	45	1	152	88	177	121	0	386	41	0	62	0	103	27	155	38	0	220	861
Total	395	0	189	4	588	373	707	454	1	1535	157	0	301	4	462	146	608	200	0	954	3539
06:00 PM	62	0	37	1	100	71	169	103	0	343	36	0	80	0	116	34	129	43	0	206	765
06:15 PM	74	0	41	1	116	71	158	67	1	297	29	0	54	1	84	12	111	34	0	157	654
06:30 PM	64	0	28	0	92	52	134	64	0	250	35	0	50	2	87	25	98	28	0	151	580
06:45 PM	65	0	27	0	92	55	123	77	0	255	21	0	54	0	75	19	92	46	0	157	579
Total	265	0	133	2	400	249	584	311	1	1145	121	0	238	3	362	90	430	151	0	671	2578
Grand Total	5086	0	1721	114	6921	3214	6527	4445	6	14192	1942	0	3927	56	5925	1500	6940	2190	0	10630	37668
Apprch %	73.5	0	24.9	1.6		22.6	46	31.3	0		32.8	0	66.3	0.9		14.1	65.3	20.6	0		
Total %	13.5	0	4.6	0.3	18.4	8.5	17.3	11.8	0	37.7	5.2	0	10.4	0.1	15.7	4	18.4	5.8	0	28.2	
Classes 1, 2, 3	4820	0	1547	66	6433	3143	6163	4252	6	13564	1771	0	3822	51	5644	1392	6576	2050	0	10018	35659
% Classes 1, 2, 3	94.8	0	89.9	57.9	92.9	97.8	94.4	95.7	100	95.6	91.2	0	97.3	91.1	95.3	92.8	94.8	93.6	0	94.2	94.7
Classes 4, 5, 6, 7	217	0	123	48	388	42	332	131	0	505	93	0	69	5	167	65	333	65	0	463	1523
% Classes 4, 5, 6, 7	4.3	0	7.1	42.1	5.6	1.3	5.1	2.9	0	3.6	4.8	0	1.8	8.9	2.8	4.3	4.8	3	0	4.4	4
Classes 8, 9, 10	46	0	51	0	97	29	32	60	0	121	78	0	35	0	113	43	31	75	0	149	480
% Classes 8, 9, 10	0.9	0	3	0	1.4	0.9	0.5	1.3	0	0.9	4	0	0.9	0	1.9	2.9	0.4	3.4	0	1.4	1.3
Classes 11, 12, 13	3	0	0	0	3	0	0	2	0	2	0	0	1	0	1	0	0	0	0	0	6
% Classes 11, 12, 13	0.1	0	0	0	0	0	0	0	0	0	0	0	0	0	0	0	0	0	0	0	0

DocuSign Envelope ID: 5C03745C-4B01-4834-A65D-B77F558A4F46

Quality Counts

920 Blairhill Rd, Ste B-106
Charlotte, NC 28217

File Name : 15411703 - I-26 Ramps -- Long Shoals Rd
Site Code : 15411703
Start Date : 4/20/2021
Page No : 3

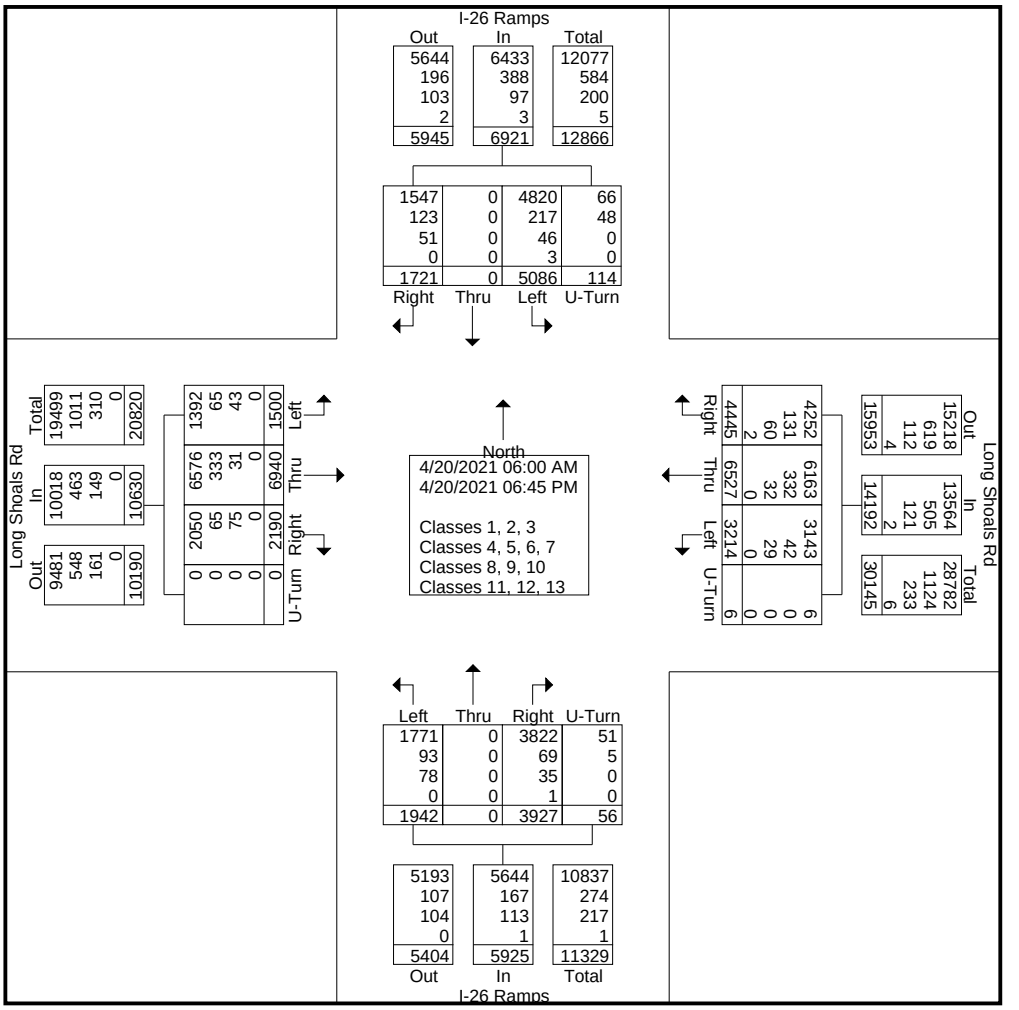

DocuSign Envelope ID: 5C03745C-4B01-4834-A65D-B77F558A4F46

Quality Counts

920 Blairhill Rd, Ste B-106
Charlotte, NC 28217

File Name : 15411703 - I-26 Ramps -- Long Shoals Rd
Site Code : 15411703
Start Date : 4/20/2021
Page No : 4

	I-26 Ramps Southbound					Long Shoals Rd Westbound					I-26 Ramps Northbound					Long Shoals Rd Eastbound					
Start Time	Left	Thru	Right	U-Turn	App. Total	Left	Thru	Right	U-Turn	App. Total	Left	Thru	Right	U-Turn	App. Total	Left	Thru	Right	U-Turn	App. Total	Int. Total
Peak Hour Analysis From 06:00 AM to 11:45 AM - Peak 1 of 1																					
Peak Hour for Entire Intersection Begins at 07:15 AM																					
07:15 AM	160	0	**42**	0	202	47	110	**104**	0	261	41	0	107	**1**	149	56	175	34	0	265	877
07:30 AM	172	0	39	3	214	55	148	96	0	299	65	0	108	0	173	**60**	186	**73**	0	**319**	1005
07:45 AM	**208**	0	41	**5**	**254**	**64**	**155**	95	0	**314**	61	0	**139**	1	**201**	51	**212**	50	0	313	**1082**
08:00 AM	143	0	35	0	178	54	105	84	0	243	**67**	0	115	1	183	51	187	42	0	280	884
Total Volume	683	0	157	8	848	220	518	379	0	1117	234	0	469	3	706	218	760	199	0	1177	3848
% App. Total	80.5	0	18.5	0.9		19.7	46.4	33.9	0		33.1	0	66.4	0.4		18.5	64.6	16.9	0		
PHF	.821	.000	.935	.400	.835	.859	.835	.911	.000	.889	.873	.000	.844	.750	.878	.908	.896	.682	.000	.922	.889

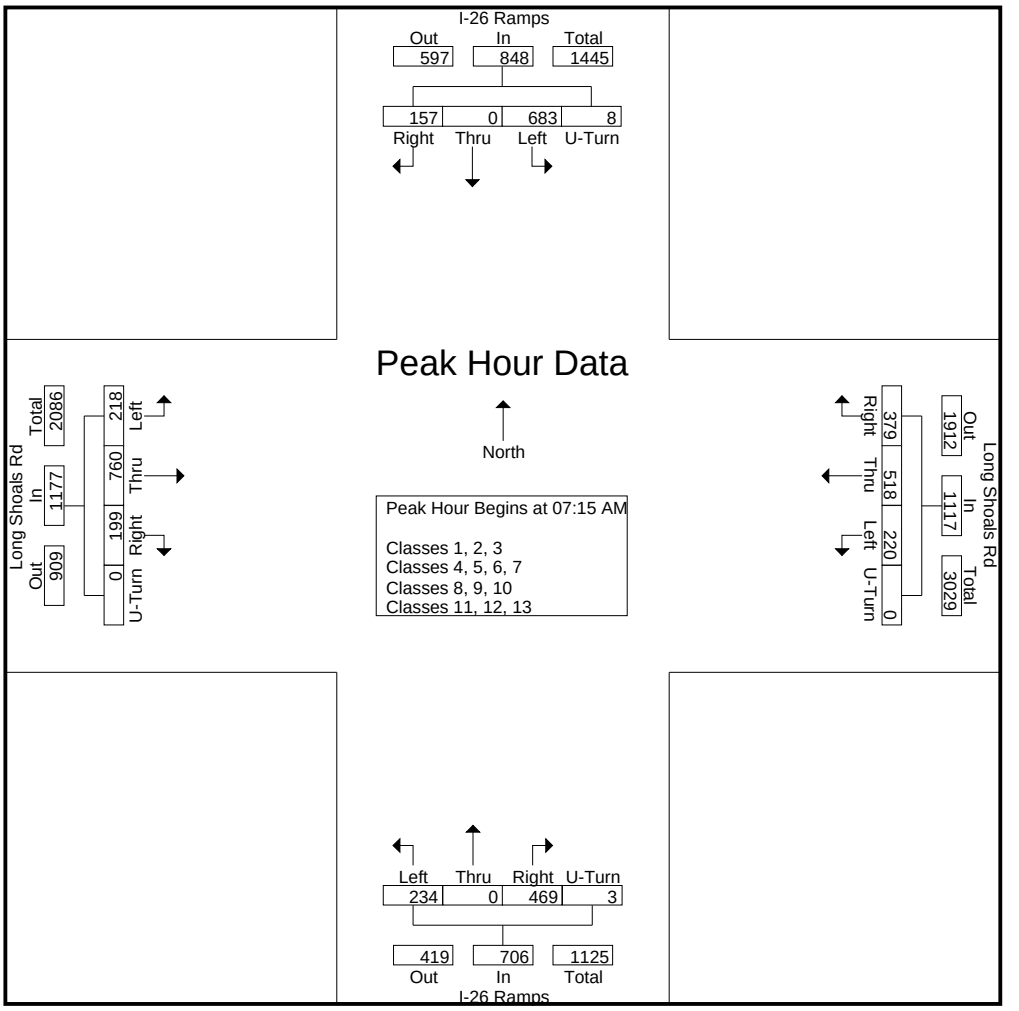

DocuSign Envelope ID: 5C03745C-4B01-4834-A65D-B77F558A4F46

Quality Counts

920 Blairhill Rd, Ste B-106
Charlotte, NC 28217

File Name : 15411703 - I-26 Ramps -- Long Shoals Rd
Site Code : 15411703
Start Date : 4/20/2021
Page No : 5

	I-26 Ramps Southbound					Long Shoals Rd Westbound					I-26 Ramps Northbound					Long Shoals Rd Eastbound					
Start Time	Left	Thru	Right	U-Turn	App. Total	Left	Thru	Right	U-Turn	App. Total	Left	Thru	Right	U-Turn	App. Total	Left	Thru	Right	U-Turn	App. Total	Int. Total
Peak Hour Analysis From 12:00 PM to 06:45 PM - Peak 1 of 1																					
Peak Hour for Entire Intersection Begins at 05:00 PM																					
05:00 PM	82	0	46	**1**	129	84	165	114	0	363	35	0	**84**	1	120	**51**	**157**	**64**	0	**272**	884
05:15 PM	**107**	0	**54**	1	**162**	**108**	**185**	**124**	**1**	**418**	**46**	0	80	1	**127**	35	157	53	0	245	**952**
05:30 PM	100	0	44	1	145	93	180	95	0	368	35	0	75	**2**	112	33	139	45	0	217	842
05:45 PM	106	0	45	1	152	88	177	121	0	386	41	0	62	0	103	27	155	38	0	220	861
Total Volume	395	0	189	4	588	373	707	454	1	1535	157	0	301	4	462	146	608	200	0	954	3539
% App. Total	67.2	0	32.1	0.7		24.3	46.1	29.6	0.1		34	0	65.2	0.9		15.3	63.7	21	0		
PHF	.923	.000	.875	1.00	.907	.863	.955	.915	.250	.918	.853	.000	.896	.500	.909	.716	.968	.781	.000	.877	.929

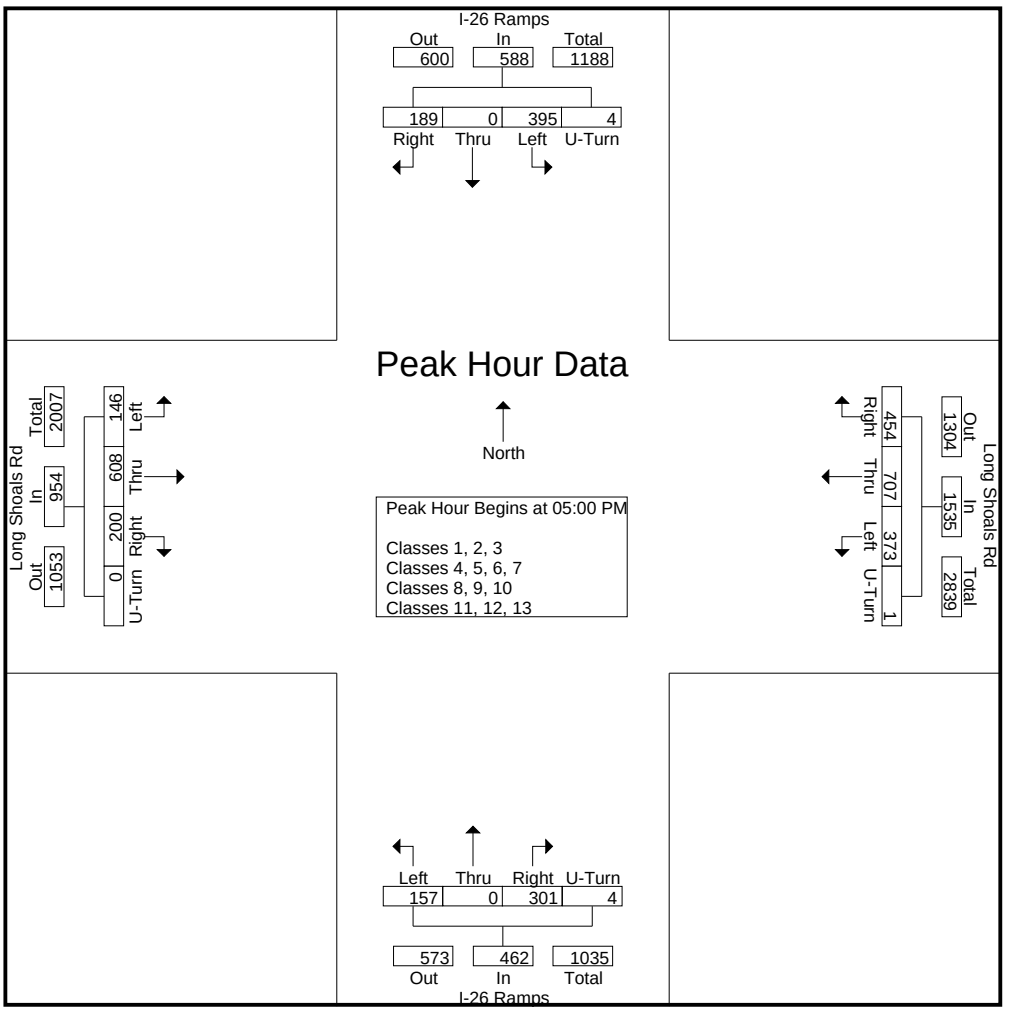

DocuSign Envelope ID: 5C03745C-4B01-4834-A65D-B77F558A4F46

Quality Counts

920 Blairhill Rd, Ste B-106
Charlotte, NC 28217

File Name : 15411703 - I-26 Ramps -- Long Shoals Rd
Site Code : 15411703
Start Date : 4/20/2021
Page No : 1

Groups Printed- Classes 1, 2, 3

	I-26 Ramps Southbound					Long Shoals Rd Westbound					I-26 Ramps Northbound					Long Shoals Rd Eastbound					
Start Time	Left	Thru	Right	U-Turn	App. Total	Left	Thru	Right	U-Turn	App. Total	Left	Thru	Right	U-Turn	App. Total	Left	Thru	Right	U-Turn	App. Total	Int. Total
06:00 AM	32	0	12	0	44	17	17	14	0	48	6	0	25	0	31	14	46	15	0	75	198
06:15 AM	47	0	13	0	60	34	31	26	0	91	21	0	31	0	52	24	54	15	0	93	296
06:30 AM	78	0	17	0	95	32	45	35	1	113	36	0	54	1	91	23	58	22	0	103	402
06:45 AM	131	0	32	0	163	26	59	45	0	130	44	0	63	0	107	23	69	30	0	122	522
Total	288	0	74	0	362	109	152	120	1	382	107	0	173	1	281	84	227	82	0	393	1418
07:00 AM	91	0	21	0	112	21	54	92	0	167	45	0	83	0	128	40	117	34	0	191	598
07:15 AM	151	0	40	0	191	46	105	101	0	252	39	0	102	1	142	52	170	34	0	256	841
07:30 AM	163	0	36	3	202	55	137	94	0	286	65	0	104	0	169	59	181	71	0	311	968
07:45 AM	198	0	38	0	236	63	145	91	0	299	56	0	138	1	195	46	202	45	0	293	1023
Total	603	0	135	3	741	185	441	378	0	1004	205	0	427	2	634	197	670	184	0	1051	3430
08:00 AM	134	0	30	0	164	54	96	81	0	231	63	0	115	1	179	48	169	41	0	258	832
08:15 AM	100	0	35	0	135	46	101	88	0	235	35	0	93	2	130	36	146	52	0	234	734
08:30 AM	95	0	42	0	137	63	74	63	0	200	37	0	94	1	132	42	108	43	0	193	662
08:45 AM	115	0	37	2	154	57	95	70	0	222	33	0	92	1	126	28	134	39	0	201	703
Total	444	0	144	2	590	220	366	302	0	888	168	0	394	5	567	154	557	175	0	886	2931
09:00 AM	64	0	24	1	89	64	70	64	0	198	35	0	74	3	112	23	110	34	0	167	566
09:15 AM	78	0	23	0	101	55	93	64	0	212	16	0	77	2	95	19	112	37	0	168	576
09:30 AM	70	0	19	0	89	55	66	64	0	185	34	0	62	2	98	22	131	33	0	186	558
09:45 AM	92	0	17	2	111	53	74	67	0	194	38	0	79	1	118	26	113	28	0	167	590
Total	304	0	83	3	390	227	303	259	0	789	123	0	292	8	423	90	466	132	0	688	2290
10:00 AM	73	0	15	0	88	63	85	69	0	217	24	0	54	0	78	25	94	29	0	148	531
10:15 AM	80	0	23	3	106	56	75	70	0	201	23	0	72	3	98	17	100	17	0	134	539
10:30 AM	87	0	24	6	117	55	92	63	0	210	23	0	64	0	87	26	87	33	0	146	560
10:45 AM	95	0	20	2	117	40	92	63	0	195	27	0	70	1	98	21	102	34	0	157	567
Total	335	0	82	11	428	214	344	265	0	823	97	0	260	4	361	89	383	113	0	585	2197
11:00 AM	85	0	17	2	104	62	96	73	0	231	19	0	42	2	63	22	88	23	0	133	531
11:15 AM	54	0	13	1	68	44	114	94	0	252	29	0	55	0	84	20	125	27	0	172	576
11:30 AM	79	0	22	2	103	60	110	71	0	241	33	0	65	2	100	28	139	37	0	204	648
11:45 AM	83	0	23	4	110	56	111	75	1	243	25	0	74	1	100	14	135	30	0	179	632
Total	301	0	75	9	385	222	431	313	1	967	106	0	236	5	347	84	487	117	0	688	2387
12:00 PM	86	0	25	2	113	55	122	82	1	260	30	0	76	3	109	17	169	43	0	229	711
12:15 PM	105	0	23	1	129	56	123	82	0	261	35	0	81	0	116	18	138	43	0	199	705
12:30 PM	78	0	28	3	109	50	138	82	0	270	36	0	90	2	128	23	122	46	0	191	698
12:45 PM	81	0	27	2	110	61	141	79	1	282	27	0	73	1	101	23	119	44	0	186	679
Total	350	0	103	8	461	222	524	325	2	1073	128	0	320	6	454	81	548	176	0	805	2793
01:00 PM	82	0	23	0	105	68	133	87	0	288	33	0	90	5	128	18	136	20	0	174	695
01:15 PM	93	0	16	1	110	48	150	80	0	278	31	0	86	0	117	22	135	41	0	198	703
01:30 PM	78	0	32	4	114	54	150	75	0	279	28	0	83	1	112	26	107	30	0	163	668
01:45 PM	95	0	32	0	127	65	134	66	0	265	36	0	67	3	106	20	141	47	0	208	706
Total	348	0	103	5	456	235	567	308	0	1110	128	0	326	9	463	86	519	138	0	743	2772
02:00 PM	102	0	25	1	128	71	108	79	0	258	37	0	67	0	104	24	120	33	0	177	667
02:15 PM	83	0	28	4	115	51	139	82	0	272	32	0	71	1	104	15	123	40	0	178	669
02:30 PM	103	0	34	1	138	51	134	95	0	280	38	0	64	0	102	34	164	49	0	247	767
02:45 PM	92	0	35	0	127	87	128	95	0	310	30	0	71	1	102	30	155	39	0	224	763
Total	380	0	122	6	508	260	509	351	0	1120	137	0	273	2	412	103	562	161	0	826	2866
03:00 PM	111	0	33	3	147	74	128	124	0	326	53	0	68	0	121	24	146	78	0	248	842
03:15 PM	97	0	35	0	132	75	172	140	0	387	28	0	89	1	118	24	132	51	0	207	844
03:30 PM	88	0	29	0	117	74	138	112	0	324	31	0	72	0	103	41	127	50	0	218	762

DocuSign Envelope ID: 5C03745C-4B01-4834-A65D-B77F558A4F46

Quality Counts

920 Blairhill Rd, Ste B-106
Charlotte, NC 28217

File Name : 15411703 - I-26 Ramps -- Long Shoals Rd
Site Code : 15411703
Start Date : 4/20/2021
Page No : 2

Groups Printed- Classes 1, 2, 3

	I-26 Ramps Southbound					Long Shoals Rd Westbound					I-26 Ramps Northbound					Long Shoals Rd Eastbound					
Start Time	Left	Thru	Right	U-Turn	App. Total	Left	Thru	Right	U-Turn	App. Total	Left	Thru	Right	U-Turn	App. Total	Left	Thru	Right	U-Turn	App. Total	Int. Total
03:45 PM	115	0	44	2	161	88	171	110	0	369	36	0	78	0	114	22	162	55	0	239	883
Total	411	0	141	5	557	311	609	486	0	1406	148	0	307	1	456	111	567	234	0	912	3331
04:00 PM	105	0	31	2	138	70	146	122	0	338	38	0	66	1	105	21	137	55	0	213	794
04:15 PM	112	0	54	2	168	89	180	81	0	350	50	0	86	0	136	24	154	44	0	222	876
04:30 PM	106	0	50	3	159	60	143	112	0	315	41	0	64	0	105	29	128	47	0	204	783
04:45 PM	94	0	38	2	134	104	178	79	0	361	37	0	63	1	101	18	149	53	0	220	816
Total	417	0	173	9	599	323	647	394	0	1364	166	0	279	2	447	92	568	199	0	859	3269
05:00 PM	80	0	43	0	123	81	161	114	0	356	32	0	83	0	115	48	154	63	0	265	859
05:15 PM	104	0	53	1	158	108	184	122	1	415	43	0	80	1	124	32	155	51	0	238	935
05:30 PM	98	0	43	1	142	93	179	93	0	365	28	0	75	2	105	30	138	43	0	211	823
05:45 PM	101	0	43	1	145	86	171	117	0	374	39	0	62	0	101	25	152	35	0	212	832
Total	383	0	182	3	568	368	695	446	1	1510	142	0	300	3	445	135	599	192	0	926	3449
06:00 PM	61	0	37	1	99	70	167	103	0	340	34	0	77	0	111	31	127	41	0	199	749
06:15 PM	70	0	40	1	111	71	154	67	1	293	29	0	54	1	84	11	108	34	0	153	641
06:30 PM	62	0	26	0	88	51	133	60	0	244	33	0	50	2	85	25	97	28	0	150	567
06:45 PM	63	0	27	0	90	55	121	75	0	251	20	0	54	0	74	19	91	44	0	154	569
Total	256	0	130	2	388	247	575	305	1	1128	116	0	235	3	354	86	423	147	0	656	2526
Grand Total	4820	0	1547	66	6433	3143	6163	4252	6	13564	1771	0	3822	51	5644	1392	6576	2050	0	10018	35659
Apprch %	74.9	0	24	1		23.2	45.4	31.3	0		31.4	0	67.7	0.9		13.9	65.6	20.5	0		
Total %	13.5	0	4.3	0.2	18	8.8	17.3	11.9	0	38	5	0	10.7	0.1	15.8	3.9	18.4	5.7	0	28.1	

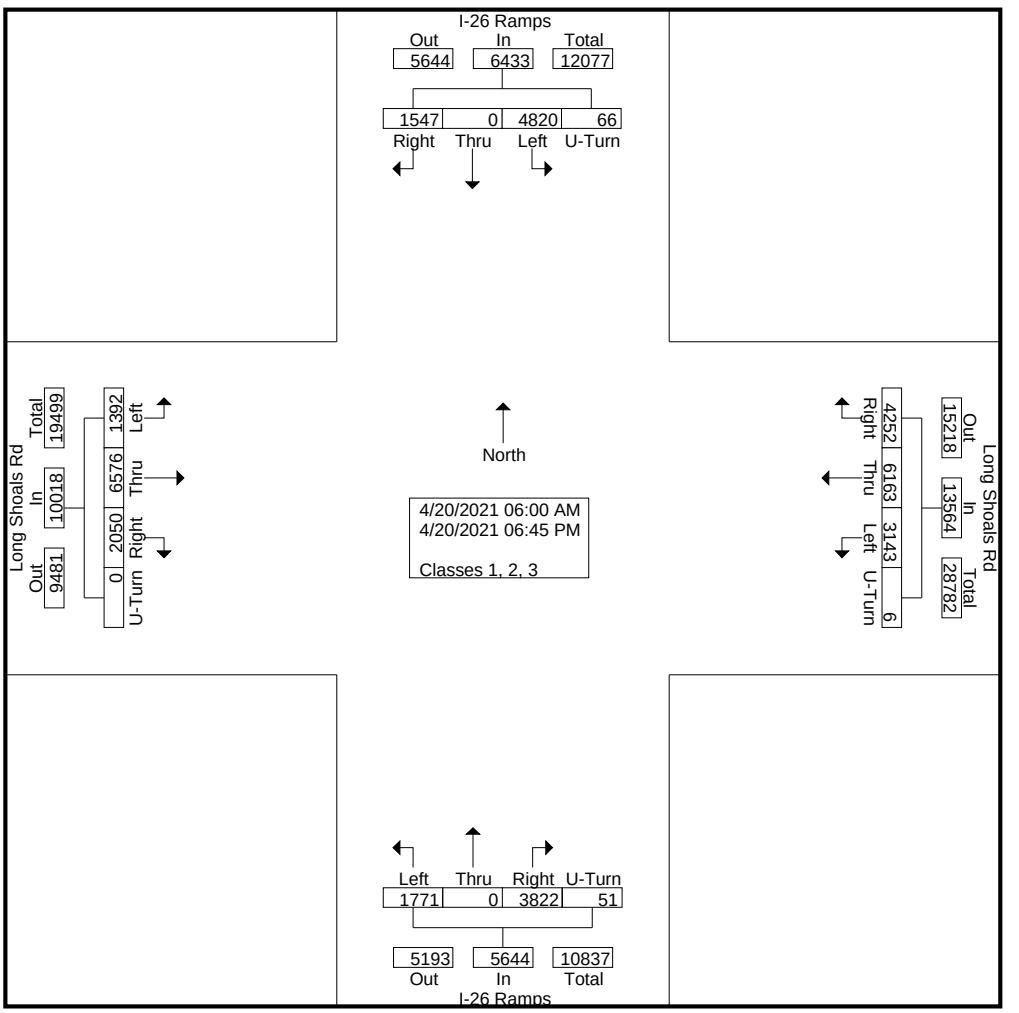

DocuSign Envelope ID: 5C03745C-4B01-4834-A65D-B77F558A4F46

Quality Counts

920 Blairhill Rd, Ste B-106
Charlotte, NC 28217

File Name : 15411703 - I-26 Ramps -- Long Shoals Rd
Site Code : 15411703
Start Date : 4/20/2021
Page No : 3

	I-26 Ramps Southbound					Long Shoals Rd Westbound					I-26 Ramps Northbound					Long Shoals Rd Eastbound					
Start Time	Left	Thru	Right	U-Turn	App. Total	Left	Thru	Right	U-Turn	App. Total	Left	Thru	Right	U-Turn	App. Total	Left	Thru	Right	U-Turn	App. Total	Int. Total
Peak Hour Analysis From 06:00 AM to 11:45 AM - Peak 1 of 1																					
Peak Hour for Entire Intersection Begins at 07:15 AM																					
07:15 AM	151	0	**40**	0	191	46	105	**101**	0	252	39	0	102	**1**	142	52	170	34	0	256	841
07:30 AM	163	0	36	**3**	202	55	137	94	0	286	**65**	0	104	0	169	**59**	181	**71**	0	**311**	968
07:45 AM	**198**	0	38	0	**236**	**63**	**145**	91	0	**299**	56	0	**138**	1	**195**	46	**202**	45	0	293	**1023**
08:00 AM	134	0	30	0	164	54	96	81	0	231	63	0	115	1	179	48	169	41	0	258	832
Total Volume	646	0	144	3	793	218	483	367	0	1068	223	0	459	3	685	205	722	191	0	1118	3664
% App. Total	81.5	0	18.2	0.4		20.4	45.2	34.4	0		32.6	0	67	0.4		18.3	64.6	17.1	0		
PHF	.816	.000	.900	.250	.840	.865	.833	.908	.000	.893	.858	.000	.832	.750	.878	.869	.894	.673	.000	.899	.895

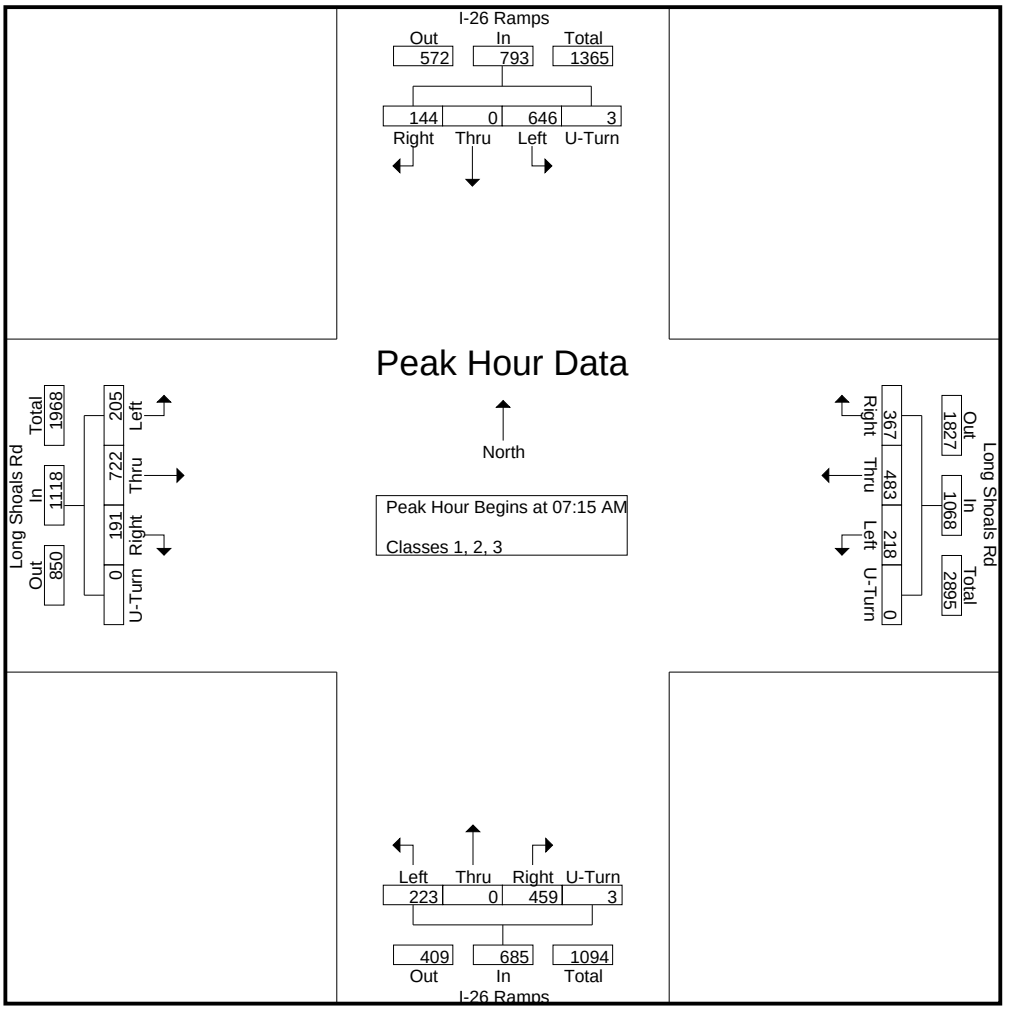

DocuSign Envelope ID: 5C03745C-4B01-4834-A65D-B77F558A4F46

Quality Counts

920 Blairhill Rd, Ste B-106
Charlotte, NC 28217

File Name : 15411703 - I-26 Ramps -- Long Shoals Rd
Site Code : 15411703
Start Date : 4/20/2021
Page No : 4

	I-26 Ramps Southbound					Long Shoals Rd Westbound					I-26 Ramps Northbound					Long Shoals Rd Eastbound					
Start Time	Left	Thru	Right	U-Turn	App. Total	Left	Thru	Right	U-Turn	App. Total	Left	Thru	Right	U-Turn	App. Total	Left	Thru	Right	U-Turn	App. Total	Int. Total
Peak Hour Analysis From 12:00 PM to 06:45 PM - Peak 1 of 1																					
Peak Hour for Entire Intersection Begins at 05:00 PM																					
05:00 PM	80	0	43	0	123	81	161	114	0	356	32	0	**83**	0	115	**48**	154	**63**	0	**265**	859
05:15 PM	**104**	0	**53**	**1**	**158**	**108**	**184**	**122**	**1**	**415**	**43**	0	80	1	**124**	32	**155**	51	0	238	**935**
05:30 PM	98	0	43	1	142	93	179	93	0	365	28	0	75	**2**	105	30	138	43	0	211	823
05:45 PM	101	0	43	1	145	86	171	117	0	374	39	0	62	0	101	25	152	35	0	212	832
Total Volume	383	0	182	3	568	368	695	446	1	1510	142	0	300	3	445	135	599	192	0	926	3449
% App. Total	67.4	0	32	0.5		24.4	46	29.5	0.1		31.9	0	67.4	0.7		14.6	64.7	20.7	0		
PHF	.921	.000	.858	.750	.899	.852	.944	.914	.250	.910	.826	.000	.904	.375	.897	.703	.966	.762	.000	.874	.922

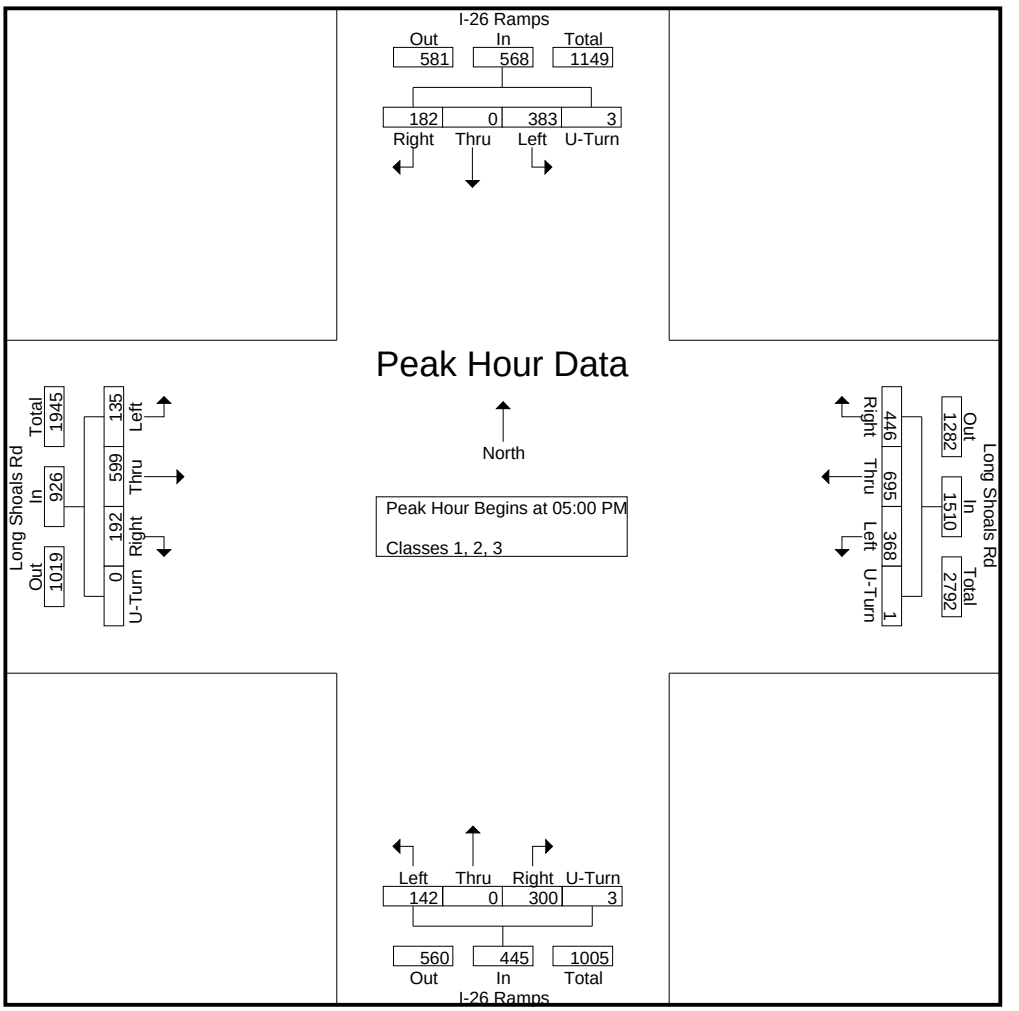

DocuSign Envelope ID: 5C03745C-4B01-4834-A65D-B77F558A4F46

Quality Counts

920 Blairhill Rd, Ste B-106
Charlotte, NC 28217

File Name : 15411703 - I-26 Ramps -- Long Shoals Rd
Site Code : 15411703
Start Date : 4/20/2021
Page No : 1

Groups Printed- Classes 4, 5, 6, 7

	I-26 Ramps Southbound					Long Shoals Rd Westbound					I-26 Ramps Northbound					Long Shoals Rd Eastbound					
Start Time	Left	Thru	Right	U-Turn	App. Total	Left	Thru	Right	U-Turn	App. Total	Left	Thru	Right	U-Turn	App. Total	Left	Thru	Right	U-Turn	App. Total	Int. Total
06:00 AM	3	0	1	0	4	0	0	0	0	0	0	0	0	0	0	1	0	2	0	3	7
06:15 AM	1	0	0	1	2	0	3	4	0	7	1	0	0	0	1	0	3	0	0	3	13
06:30 AM	3	0	1	0	4	0	1	2	0	3	1	0	2	0	3	1	1	1	0	3	13
06:45 AM	9	0	0	0	9	0	1	1	0	2	0	0	3	0	3	0	3	0	0	3	17
Total	16	0	2	1	19	0	5	7	0	12	2	0	5	0	7	2	7	3	0	12	50
07:00 AM	5	0	1	0	6	0	2	1	0	3	1	0	3	0	4	0	1	1	0	2	15
07:15 AM	8	0	2	0	10	1	5	2	0	8	1	0	2	0	3	4	5	0	0	9	30
07:30 AM	9	0	1	0	10	0	11	0	0	11	0	0	3	0	3	1	5	1	0	7	31
07:45 AM	10	0	2	5	17	0	9	2	0	11	2	0	1	0	3	4	8	2	0	14	45
Total	32	0	6	5	43	1	27	5	0	33	4	0	9	0	13	9	19	4	0	32	121
08:00 AM	7	0	5	0	12	0	8	2	0	10	1	0	0	0	1	3	17	0	0	20	43
08:15 AM	5	0	2	1	8	0	6	2	0	8	7	0	0	1	8	2	11	0	0	13	37
08:30 AM	7	0	2	0	9	0	2	6	0	8	3	0	5	0	8	5	14	1	0	20	45
08:45 AM	5	0	3	2	10	0	10	3	0	13	1	0	2	0	3	1	11	2	0	14	40
Total	24	0	12	3	39	0	26	13	0	39	12	0	7	1	20	11	53	3	0	67	165
09:00 AM	6	0	4	5	15	0	6	4	0	10	1	0	2	0	3	0	4	1	0	5	33
09:15 AM	6	0	1	0	7	2	7	6	0	15	2	0	2	1	5	1	14	1	0	16	43
09:30 AM	3	0	1	1	5	2	10	5	0	17	2	0	1	0	3	1	10	1	0	12	37
09:45 AM	3	0	4	1	8	1	10	4	0	15	1	0	1	0	2	1	8	4	0	13	38
Total	18	0	10	7	35	5	33	19	0	57	6	0	6	1	13	3	36	7	0	46	151
10:00 AM	3	0	4	3	10	1	12	3	0	16	5	0	1	0	6	4	6	4	0	14	46
10:15 AM	3	0	4	2	9	2	9	3	0	14	1	0	1	0	2	1	9	0	0	10	35
10:30 AM	5	0	1	0	6	1	6	1	0	8	4	0	2	0	6	2	11	1	0	14	34
10:45 AM	2	0	4	0	6	2	8	6	0	16	4	0	1	0	5	0	9	4	0	13	40
Total	13	0	13	5	31	6	35	13	0	54	14	0	5	0	19	7	35	9	0	51	155
11:00 AM	5	0	4	1	10	2	10	2	0	14	1	0	2	0	3	0	2	0	0	2	29
11:15 AM	5	0	4	2	11	1	12	2	0	15	2	0	5	0	7	2	14	1	0	17	50
11:30 AM	4	0	4	2	10	2	5	2	0	9	1	0	1	0	2	0	7	0	0	7	28
11:45 AM	3	0	3	0	6	2	4	4	0	10	2	0	1	0	3	0	13	3	0	16	35
Total	17	0	15	5	37	7	31	10	0	48	6	0	9	0	15	2	36	4	0	42	142
12:00 PM	3	0	6	1	10	1	14	4	0	19	2	0	1	0	3	3	6	2	0	11	43
12:15 PM	6	0	3	1	10	0	5	4	0	9	4	0	0	0	4	2	9	0	0	11	34
12:30 PM	3	0	2	3	8	2	6	2	0	10	3	0	2	0	5	0	10	1	0	11	34
12:45 PM	4	0	6	1	11	0	14	3	0	17	2	0	1	0	3	0	7	4	0	11	42
Total	16	0	17	6	39	3	39	13	0	55	11	0	4	0	15	5	32	7	0	44	153
01:00 PM	7	0	0	0	7	0	15	3	0	18	1	0	2	0	3	0	5	1	0	6	34
01:15 PM	5	0	4	1	10	0	6	0	0	6	3	0	1	1	5	1	16	4	0	21	42
01:30 PM	2	0	3	3	8	0	4	3	0	7	1	0	1	0	2	1	9	3	0	13	30
01:45 PM	6	0	1	1	8	0	5	4	0	9	1	0	2	1	4	0	5	1	0	6	27
Total	20	0	8	5	33	0	30	10	0	40	6	0	6	2	14	2	35	9	0	46	133
02:00 PM	6	0	2	0	8	2	15	6	0	23	1	0	1	0	2	3	0	1	0	4	37
02:15 PM	7	0	2	1	10	1	4	2	0	7	4	0	0	0	4	2	9	2	0	13	34
02:30 PM	8	0	3	3	14	0	7	1	0	8	0	0	2	0	2	4	12	1	0	17	41
02:45 PM	5	0	2	0	7	4	5	5	0	14	2	0	2	0	4	2	3	0	0	5	30
Total	26	0	9	4	39	7	31	14	0	52	7	0	5	0	12	11	24	4	0	39	142
03:00 PM	2	0	7	2	11	1	10	4	0	15	4	0	0	0	4	0	11	1	0	12	42
03:15 PM	3	0	3	1	7	1	8	5	0	14	1	0	1	0	2	0	2	1	0	3	26
03:30 PM	4	0	2	1	7	1	3	2	0	6	3	0	2	0	5	0	12	4	0	16	34

DocuSign Envelope ID: 5C03745C-4B01-4834-A65D-B77F558A4F46

Quality Counts

920 Blairhill Rd, Ste B-106
Charlotte, NC 28217

File Name : 15411703 - I-26 Ramps -- Long Shoals Rd
Site Code : 15411703
Start Date : 4/20/2021
Page No : 2

Groups Printed- Classes 4, 5, 6, 7

	I-26 Ramps Southbound					Long Shoals Rd Westbound					I-26 Ramps Northbound					Long Shoals Rd Eastbound					
Start Time	Left	Thru	Right	U-Turn	App. Total	Left	Thru	Right	U-Turn	App. Total	Left	Thru	Right	U-Turn	App. Total	Left	Thru	Right	U-Turn	App. Total	Int. Total
03:45 PM	4	0	1	2	7	0	11	1	0	12	2	0	1	0	3	0	6	0	0	6	28
Total	13	0	13	6	32	3	32	12	0	47	10	0	4	0	14	0	31	6	0	37	130
04:00 PM	0	0	3	0	3	4	8	1	0	13	1	0	3	0	4	1	4	0	0	5	25
04:15 PM	5	0	2	0	7	2	2	0	0	4	2	0	1	0	3	3	5	2	0	10	24
04:30 PM	2	0	5	0	7	1	12	1	0	14	1	0	1	0	2	2	2	3	0	7	30
04:45 PM	3	0	3	0	6	0	2	2	0	4	1	0	0	0	1	0	4	1	0	5	16
Total	10	0	13	0	23	7	24	4	0	35	5	0	5	0	10	6	15	6	0	27	95
05:00 PM	2	0	1	1	4	2	4	0	0	6	0	0	1	1	2	2	2	0	0	4	16
05:15 PM	2	0	1	0	3	0	1	1	0	2	2	0	0	0	2	1	1	0	0	2	9
05:30 PM	1	0	0	0	1	0	1	1	0	2	4	0	0	0	4	0	1	0	0	1	8
05:45 PM	3	0	1	0	4	0	5	4	0	9	1	0	0	0	1	1	2	0	0	3	17
Total	8	0	3	1	12	2	11	6	0	19	7	0	1	1	9	4	6	0	0	10	50
06:00 PM	1	0	0	0	1	0	1	0	0	1	2	0	3	0	5	3	2	2	0	7	14
06:15 PM	1	0	1	0	2	0	4	0	0	4	0	0	0	0	0	0	1	0	0	1	7
06:30 PM	0	0	1	0	1	1	1	3	0	5	0	0	0	0	0	0	0	0	0	0	6
06:45 PM	2	0	0	0	2	0	2	2	0	4	1	0	0	0	1	0	1	1	0	2	9
Total	4	0	2	0	6	1	8	5	0	14	3	0	3	0	6	3	4	3	0	10	36
Grand Total	217	0	123	48	388	42	332	131	0	505	93	0	69	5	167	65	333	65	0	463	1523
Apprch %	55.9	0	31.7	12.4		8.3	65.7	25.9	0		55.7	0	41.3	3		14	71.9	14	0		
Total %	14.2	0	8.1	3.2	25.5	2.8	21.8	8.6	0	33.2	6.1	0	4.5	0.3	11	4.3	21.9	4.3	0	30.4	

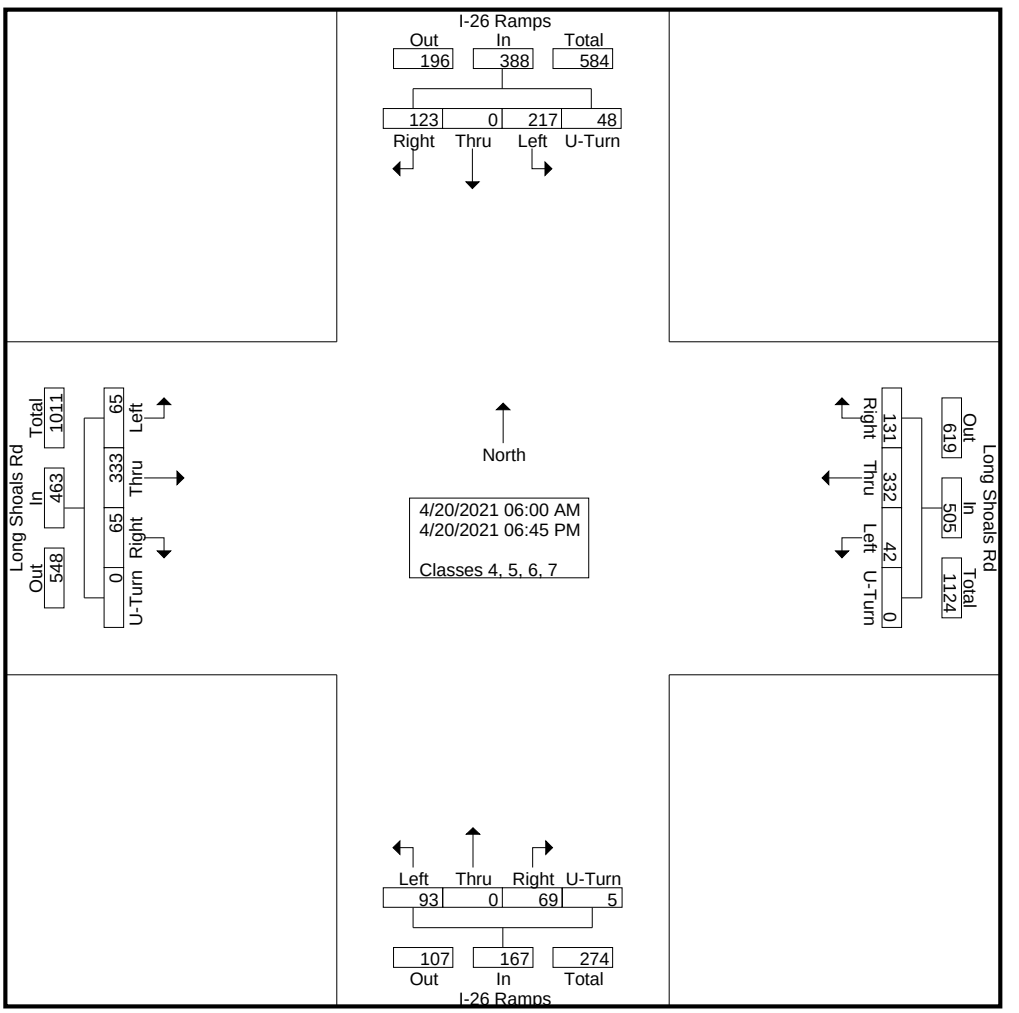

DocuSign Envelope ID: 5C03745C-4B01-4834-A65D-B77F558A4F46

Quality Counts

920 Blairhill Rd, Ste B-106
Charlotte, NC 28217

File Name : 15411703 - I-26 Ramps -- Long Shoals Rd
Site Code : 15411703
Start Date : 4/20/2021
Page No : 3

	I-26 Ramps Southbound					Long Shoals Rd Westbound					I-26 Ramps Northbound					Long Shoals Rd Eastbound					
Start Time	Left	Thru	Right	U-Turn	App. Total	Left	Thru	Right	U-Turn	App. Total	Left	Thru	Right	U-Turn	App. Total	Left	Thru	Right	U-Turn	App. Total	Int. Total
Peak Hour Analysis From 06:00 AM to 11:45 AM - Peak 1 of 1																					
Peak Hour for Entire Intersection Begins at 07:45 AM																					
07:45 AM	**10**	0	2	**5**	**17**	0	**9**	2	0	**11**	2	0	1	0	3	4	8	**2**	0	14	**45**
08:00 AM	7	0	**5**	0	12	0	8	2	0	10	1	0	0	0	1	3	**17**	0	0	**20**	43
08:15 AM	5	0	2	1	8	0	6	2	0	8	**7**	0	0	**1**	**8**	2	11	0	0	13	37
08:30 AM	7	0	2	0	9	0	2	**6**	0	8	3	0	**5**	0	8	**5**	14	1	0	20	45
Total Volume	29	0	11	6	46	0	25	12	0	37	13	0	6	1	20	14	50	3	0	67	170
% App. Total	63	0	23.9	13		0	67.6	32.4	0		65	0	30	5		20.9	74.6	4.5	0		
PHF	.725	.000	.550	.300	.676	.000	.694	.500	.000	.841	.464	.000	.300	.250	.625	.700	.735	.375	.000	.838	.944

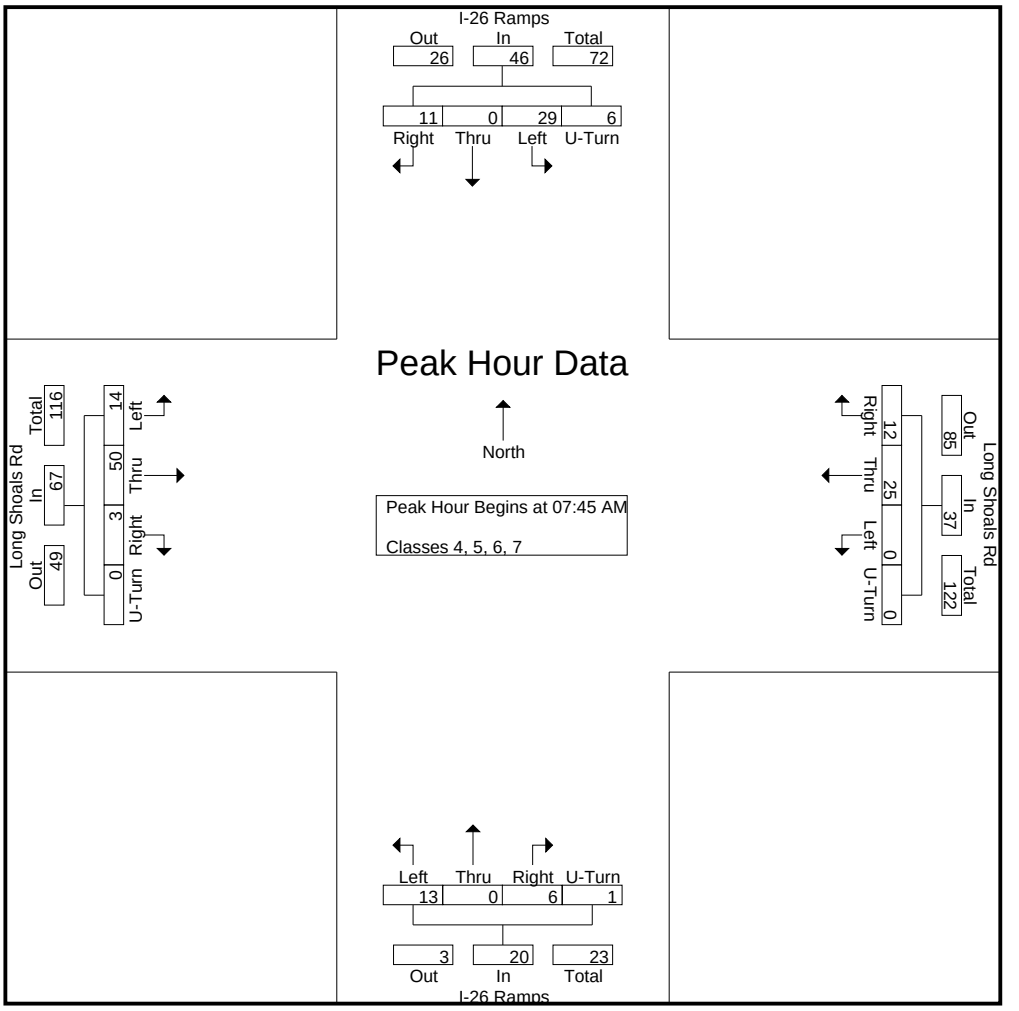

DocuSign Envelope ID: 5C03745C-4B01-4834-A65D-B77F558A4F46

Quality Counts

920 Blairhill Rd, Ste B-106
Charlotte, NC 28217

File Name : 15411703 - I-26 Ramps -- Long Shoals Rd
Site Code : 15411703
Start Date : 4/20/2021
Page No : 4

	I-26 Ramps Southbound					Long Shoals Rd Westbound					I-26 Ramps Northbound					Long Shoals Rd Eastbound					
Start Time	Left	Thru	Right	U-Turn	App. Total	Left	Thru	Right	U-Turn	App. Total	Left	Thru	Right	U-Turn	App. Total	Left	Thru	Right	U-Turn	App. Total	Int. Total
Peak Hour Analysis From 12:00 PM to 06:45 PM - Peak 1 of 1																					
Peak Hour for Entire Intersection Begins at 12:00 PM																					
12:00 PM	3	0	**6**	1	10	1	**14**	**4**	0	**19**	2	0	1	0	3	**3**	6	2	0	**11**	**43**
12:15 PM	**6**	0	3	1	10	0	5	4	0	9	**4**	0	0	0	4	2	9	0	0	11	34
12:30 PM	3	0	2	**3**	8	**2**	6	2	0	10	3	0	**2**	0	**5**	0	**10**	1	0	11	34
12:45 PM	4	0	6	1	**11**	0	14	3	0	17	2	0	1	0	3	0	7	**4**	0	11	42
Total Volume	16	0	17	6	39	3	39	13	0	55	11	0	4	0	15	5	32	7	0	44	153
% App. Total	41	0	43.6	15.4		5.5	70.9	23.6	0		73.3	0	26.7	0		11.4	72.7	15.9	0		
PHF	.667	.000	.708	.500	.886	.375	.696	.813	.000	.724	.688	.000	.500	.000	.750	.417	.800	.438	.000	1.00	.890

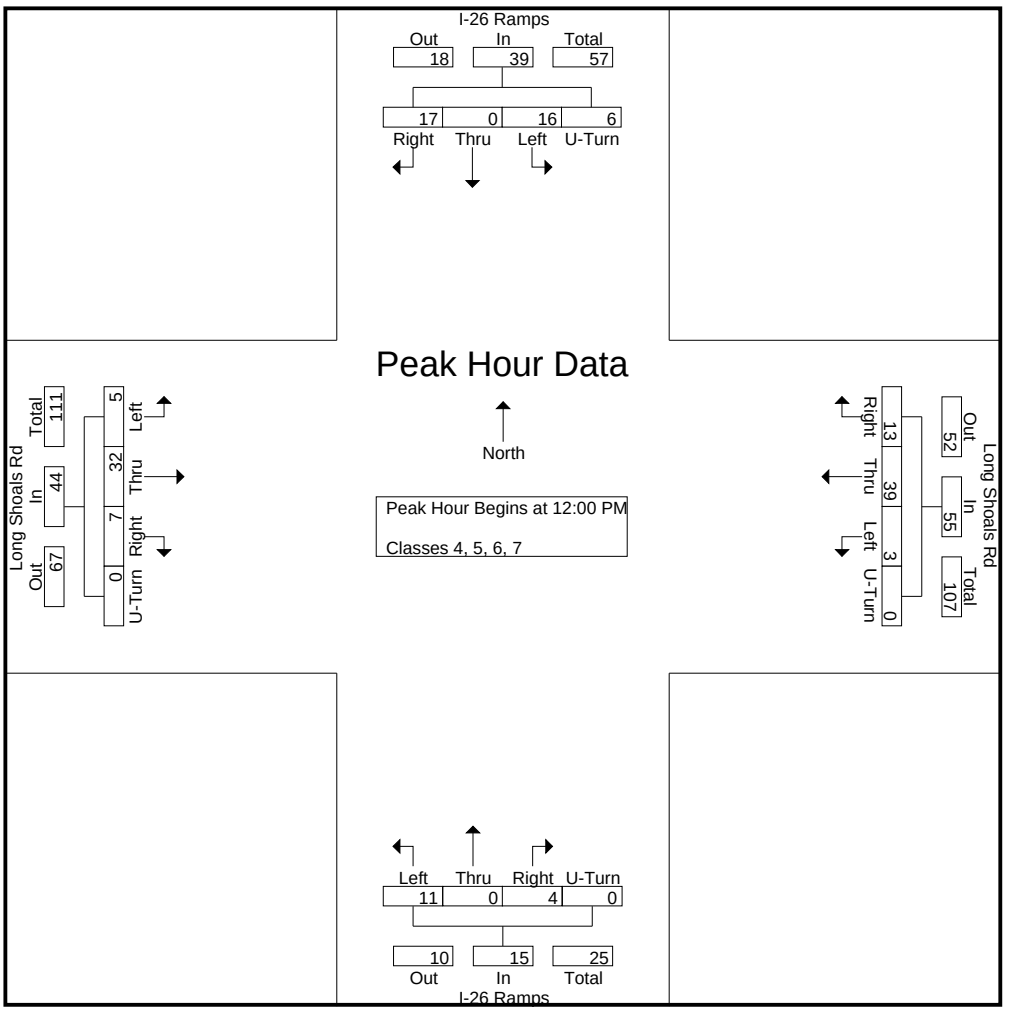

DocuSign Envelope ID: 5C03745C-4B01-4834-A65D-B77F558A4F46

Quality Counts

920 Blairhill Rd, Ste B-106
Charlotte, NC 28217

File Name : 15411703 - I-26 Ramps -- Long Shoals Rd
Site Code : 15411703
Start Date : 4/20/2021
Page No : 1

Groups Printed- Classes 8, 9, 10

	I-26 Ramps Southbound					Long Shoals Rd Westbound					I-26 Ramps Northbound					Long Shoals Rd Eastbound					
Start Time	Left	Thru	Right	U-Turn	App. Total	Left	Thru	Right	U-Turn	App. Total	Left	Thru	Right	U-Turn	App. Total	Left	Thru	Right	U-Turn	App. Total	Int. Total
06:00 AM	0	0	0	0	0	0	0	2	0	2	0	0	0	0	0	1	1	1	0	3	5
06:15 AM	0	0	0	0	0	1	0	0	0	1	1	0	1	0	2	0	0	1	0	1	4
06:30 AM	0	0	1	0	1	0	1	0	0	1	1	0	1	0	2	0	1	0	0	1	5
06:45 AM	1	0	0	0	1	0	0	1	0	1	4	0	1	0	5	1	0	0	0	1	8
Total	1	0	1	0	2	1	1	3	0	5	6	0	3	0	9	2	2	2	0	6	22
07:00 AM	0	0	1	0	1	0	0	0	0	0	3	0	0	0	3	0	0	2	0	2	6
07:15 AM	1	0	0	0	1	0	0	1	0	1	1	0	3	0	4	0	0	0	0	0	6
07:30 AM	0	0	2	0	2	0	0	2	0	2	0	0	1	0	1	0	0	1	0	1	6
07:45 AM	0	0	1	0	1	1	1	2	0	4	3	0	0	0	3	1	2	3	0	6	14
Total	1	0	4	0	5	1	1	5	0	7	7	0	4	0	11	1	2	6	0	9	32
08:00 AM	2	0	0	0	2	0	1	1	0	2	3	0	0	0	3	0	1	1	0	2	9
08:15 AM	1	0	0	0	1	1	1	3	0	5	0	0	1	0	1	0	1	1	0	2	9
08:30 AM	0	0	0	0	0	0	0	2	0	2	1	0	1	0	2	1	0	0	0	1	5
08:45 AM	0	0	0	0	0	2	5	2	0	9	1	0	2	0	3	1	3	4	0	8	20
Total	3	0	0	0	3	3	7	8	0	18	5	0	4	0	9	2	5	6	0	13	43
09:00 AM	1	0	1	0	2	0	2	2	0	4	1	0	0	0	1	0	1	2	0	3	10
09:15 AM	0	0	2	0	2	2	0	0	0	2	3	0	0	0	3	1	1	1	0	3	10
09:30 AM	1	0	1	0	2	0	0	2	0	2	2	0	0	0	2	1	0	1	0	2	8
09:45 AM	2	0	1	0	3	0	0	1	0	1	1	0	3	0	4	2	0	1	0	3	11
Total	4	0	5	0	9	2	2	5	0	9	7	0	3	0	10	4	2	5	0	11	39
10:00 AM	3	0	3	0	6	1	1	2	0	4	6	0	1	0	7	0	0	2	0	2	19
10:15 AM	0	0	0	0	0	1	0	1	0	2	1	0	1	0	2	2	0	0	0	2	6
10:30 AM	0	0	0	0	0	2	1	0	0	3	2	0	2	0	4	0	0	4	0	4	11
10:45 AM	2	0	0	0	2	1	0	2	0	3	3	0	1	0	4	1	1	2	0	4	13
Total	5	0	3	0	8	5	2	5	0	12	12	0	5	0	17	3	1	8	0	12	49
11:00 AM	3	0	0	0	3	0	3	1	0	4	4	0	0	0	4	1	2	1	0	4	15
11:15 AM	3	0	3	0	6	0	1	3	0	4	0	0	3	0	3	2	0	3	0	5	18
11:30 AM	0	0	0	0	0	2	1	1	0	4	1	0	0	0	1	0	0	7	0	7	12
11:45 AM	1	0	1	0	2	2	0	1	0	3	1	0	0	0	1	2	1	1	0	4	10
Total	7	0	4	0	11	4	5	6	0	15	6	0	3	0	9	5	3	12	0	20	55
12:00 PM	1	0	2	0	3	2	1	2	0	5	2	0	1	0	3	2	0	1	0	3	14
12:15 PM	0	0	4	0	4	1	1	2	0	4	0	0	0	0	0	1	0	2	0	3	11
12:30 PM	0	0	2	0	2	0	0	2	0	2	0	0	0	0	0	0	0	4	0	4	8
12:45 PM	1	0	1	0	2	1	0	2	0	3	1	0	2	0	3	0	0	1	0	1	9
Total	2	0	9	0	11	4	2	8	0	14	3	0	3	0	6	3	0	8	0	11	42
01:00 PM	1	0	2	0	3	0	1	0	0	1	2	0	0	0	2	0	0	3	0	3	9
01:15 PM	1	0	2	0	3	0	2	0	0	2	0	0	0	0	0	1	0	0	0	1	6
01:30 PM	0	0	1	0	1	1	0	0	0	1	2	0	0	0	2	4	0	2	0	6	10
01:45 PM	1	0	2	0	3	0	0	1	0	1	0	0	1	0	1	0	0	4	0	4	9
Total	3	0	7	0	10	1	3	1	0	5	4	0	1	0	5	5	0	9	0	14	34
02:00 PM	1	0	3	0	4	0	0	1	0	1	1	0	0	0	1	3	1	2	0	6	12
02:15 PM	2	0	1	0	3	0	1	1	0	2	1	0	0	0	1	1	0	1	0	2	8
02:30 PM	1	0	0	0	1	0	0	1	0	1	2	0	1	0	3	0	1	0	0	1	6
02:45 PM	2	0	1	0	3	1	1	0	0	2	3	0	1	0	4	0	1	0	0	1	10
Total	6	0	5	0	11	1	2	3	0	6	7	0	2	0	9	4	3	3	0	10	36
03:00 PM	2	0	1	0	3	0	0	2	0	2	2	0	2	0	4	0	0	1	0	1	10
03:15 PM	0	0	3	0	3	1	0	2	0	3	0	0	1	0	1	1	1	2	0	4	11
03:30 PM	0	0	0	0	0	0	1	2	0	3	3	0	1	0	4	1	0	0	0	1	8

DocuSign Envelope ID: 5C03745C-4B01-4834-A65D-B77F558A4F46

Quality Counts

920 Blairhill Rd, Ste B-106
Charlotte, NC 28217

File Name : 15411703 - I-26 Ramps -- Long Shoals Rd
Site Code : 15411703
Start Date : 4/20/2021
Page No : 2

Groups Printed- Classes 8, 9, 10

	I-26 Ramps Southbound					Long Shoals Rd Westbound					I-26 Ramps Northbound					Long Shoals Rd Eastbound					
Start Time	Left	Thru	Right	U-Turn	App. Total	Left	Thru	Right	U-Turn	App. Total	Left	Thru	Right	U-Turn	App. Total	Left	Thru	Right	U-Turn	App. Total	Int. Total
03:45 PM	1	0	0	0	1	1	0	2	0	3	1	0	0	0	1	0	1	1	0	2	7
Total	3	0	4	0	7	2	1	8	0	11	6	0	4	0	10	2	2	4	0	8	36
04:00 PM	0	0	0	0	0	0	3	1	0	4	1	0	1	0	2	0	2	2	0	4	10
04:15 PM	0	0	1	0	1	1	0	1	0	2	1	0	0	0	1	2	0	0	0	2	6
04:30 PM	2	0	3	0	5	0	1	1	0	2	2	0	1	0	3	2	3	1	0	6	16
04:45 PM	0	0	0	0	0	0	0	2	0	2	1	0	1	0	2	0	0	0	0	0	4
Total	2	0	4	0	6	1	4	5	0	10	5	0	3	0	8	4	5	3	0	12	36
05:00 PM	0	0	2	0	2	1	0	0	0	1	3	0	0	0	3	1	1	1	0	3	9
05:15 PM	1	0	0	0	1	0	0	1	0	1	1	0	0	0	1	2	1	2	0	5	8
05:30 PM	1	0	1	0	2	0	0	1	0	1	3	0	0	0	3	3	0	2	0	5	11
05:45 PM	2	0	1	0	3	2	1	0	0	3	1	0	0	0	1	1	1	3	0	5	12
Total	4	0	4	0	8	3	1	2	0	6	8	0	0	0	8	7	3	8	0	18	40
06:00 PM	0	0	0	0	0	1	1	0	0	2	0	0	0	0	0	0	0	0	0	0	2
06:15 PM	3	0	0	0	3	0	0	0	0	0	0	0	0	0	0	1	2	0	0	3	6
06:30 PM	2	0	1	0	3	0	0	1	0	1	2	0	0	0	2	0	1	0	0	1	7
06:45 PM	0	0	0	0	0	0	0	0	0	0	0	0	0	0	0	0	0	1	0	1	1
Total	5	0	1	0	6	1	1	1	0	3	2	0	0	0	2	1	3	1	0	5	16
Grand Total	46	0	51	0	97	29	32	60	0	121	78	0	35	0	113	43	31	75	0	149	480
Apprch %	47.4	0	52.6	0		24	26.4	49.6	0		69	0	31	0		28.9	20.8	50.3	0		
Total %	9.6	0	10.6	0	20.2	6	6.7	12.5	0	25.2	16.2	0	7.3	0	23.5	9	6.5	15.6	0	31	

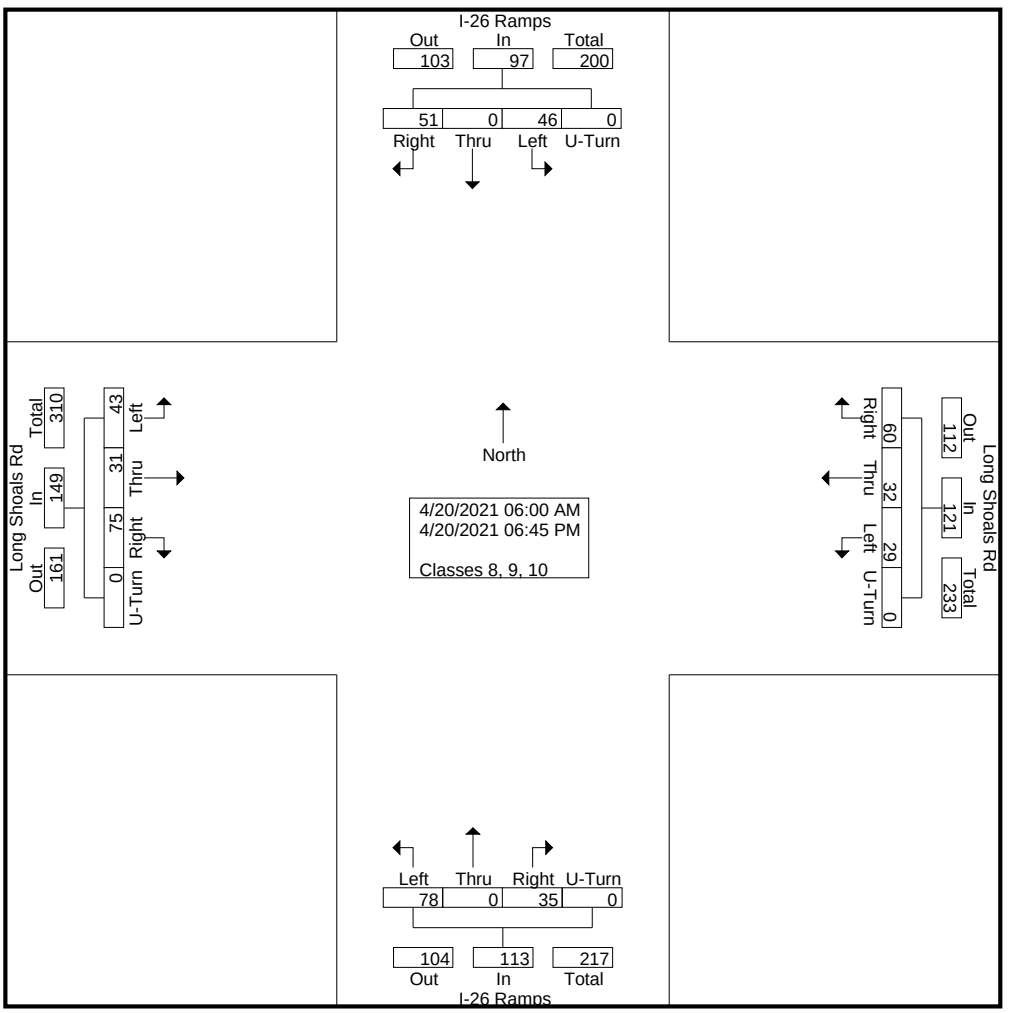

DocuSign Envelope ID: 5C03745C-4B01-4834-A65D-B77F558A4F46

Quality Counts

920 Blairhill Rd, Ste B-106
Charlotte, NC 28217

File Name : 15411703 - I-26 Ramps -- Long Shoals Rd
Site Code : 15411703
Start Date : 4/20/2021
Page No : 3

	I-26 Ramps Southbound					Long Shoals Rd Westbound					I-26 Ramps Northbound					Long Shoals Rd Eastbound					
Start Time	Left	Thru	Right	U-Turn	App. Total	Left	Thru	Right	U-Turn	App. Total	Left	Thru	Right	U-Turn	App. Total	Left	Thru	Right	U-Turn	App. Total	Int. Total
Peak Hour Analysis From 06:00 AM to 11:45 AM - Peak 1 of 1																					
Peak Hour for Entire Intersection Begins at 10:45 AM																					
10:45 AM	2	0	0	0	2	1	0	2	0	3	3	0	1	0	**4**	1	1	2	0	4	13
11:00 AM	**3**	0	0	0	3	0	**3**	1	0	**4**	**4**	0	0	0	4	1	**2**	1	0	4	15
11:15 AM	3	0	**3**	0	**6**	0	1	**3**	0	4	0	0	**3**	0	3	**2**	0	3	0	5	**18**
11:30 AM	0	0	0	0	0	**2**	1	1	0	4	1	0	0	0	1	0	0	**7**	0	**7**	12
Total Volume	8	0	3	0	11	3	5	7	0	15	8	0	4	0	12	4	3	13	0	20	58
% App. Total	72.7	0	27.3	0		20	33.3	46.7	0		66.7	0	33.3	0		20	15	65	0		
PHF	.667	.000	.250	.000	.458	.375	.417	.583	.000	.938	.500	.000	.333	.000	.750	.500	.375	.464	.000	.714	.806

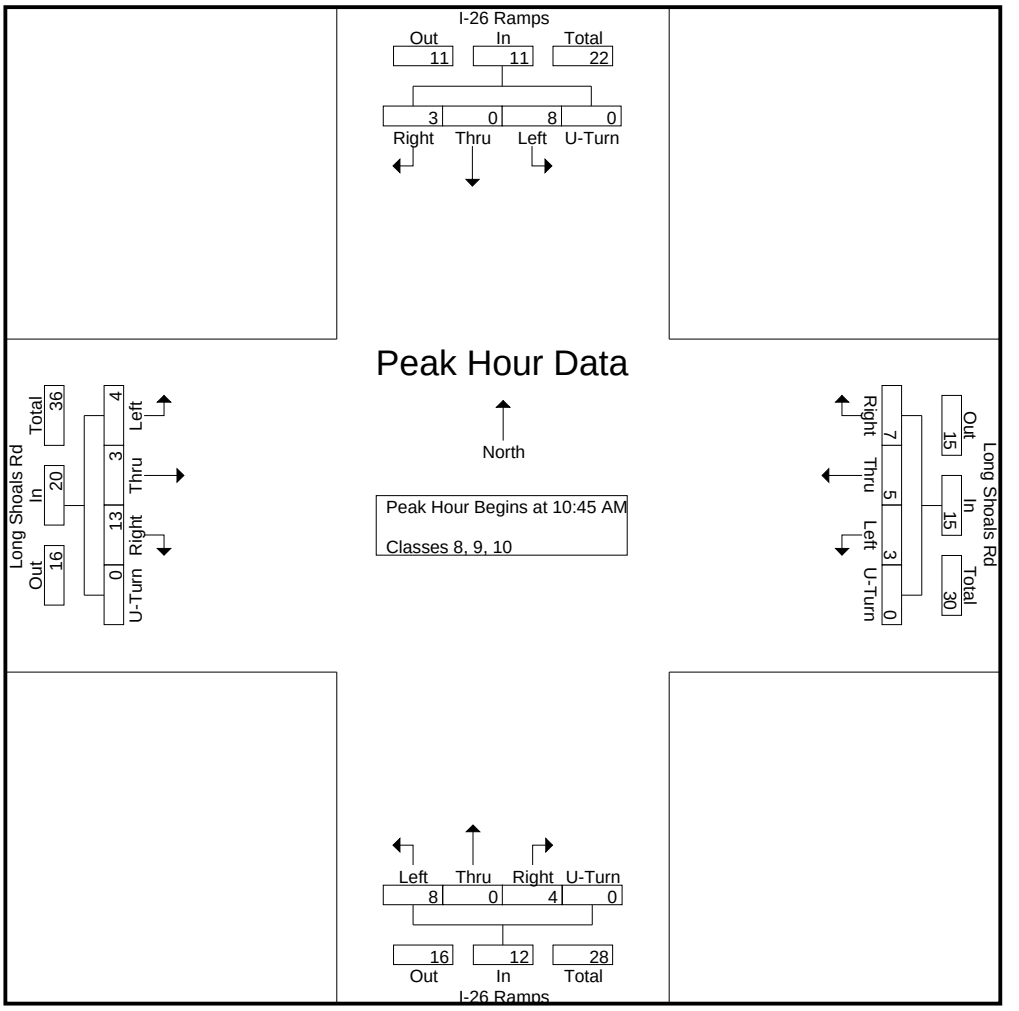

DocuSign Envelope ID: 5C03745C-4B01-4834-A65D-B77F558A4F46

Quality Counts

920 Blairhill Rd, Ste B-106
Charlotte, NC 28217

File Name : 15411703 - I-26 Ramps -- Long Shoals Rd
Site Code : 15411703
Start Date : 4/20/2021

	I-26 Ramps Southbound					Long Shoals Rd Westbound					I-26 Ramps Northbound					Long Shoals Rd Eastbound					
Start Time	Left	Thru	Right	U-Turn	App. Total	Left	Thru	Right	U-Turn	App. Total	Left	Thru	Right	U-Turn	App. Total	Left	Thru	Right	U-Turn	App. Total	Int. Total
Peak Hour Analysis From 12:00 PM to 06:45 PM - Peak 1 of 1																					
Peak Hour for Entire Intersection Begins at 12:00 PM																					
12:00 PM	**1**	0	2	0	3	**2**	**1**	**2**	0	**5**	**2**	0	1	0	**3**	**2**	0	1	0	3	**14**
12:15 PM	0	0	**4**	0	**4**	1	1	2	0	4	0	0	0	0	0	1	0	2	0	3	11
12:30 PM	0	0	2	0	2	0	0	2	0	2	0	0	0	0	0	0	0	**4**	0	**4**	8
12:45 PM	1	0	1	0	2	1	0	2	0	3	1	0	**2**	0	3	0	0	1	0	1	9
Total Volume	2	0	9	0	11	4	2	8	0	14	3	0	3	0	6	3	0	8	0	11	42
% App. Total	18.2	0	81.8	0		28.6	14.3	57.1	0		50	0	50	0		27.3	0	72.7	0		
PHF	.500	.000	.563	.000	.688	.500	.500	1.00	.000	.700	.375	.000	.375	.000	.500	.375	.000	.500	.000	.688	.750

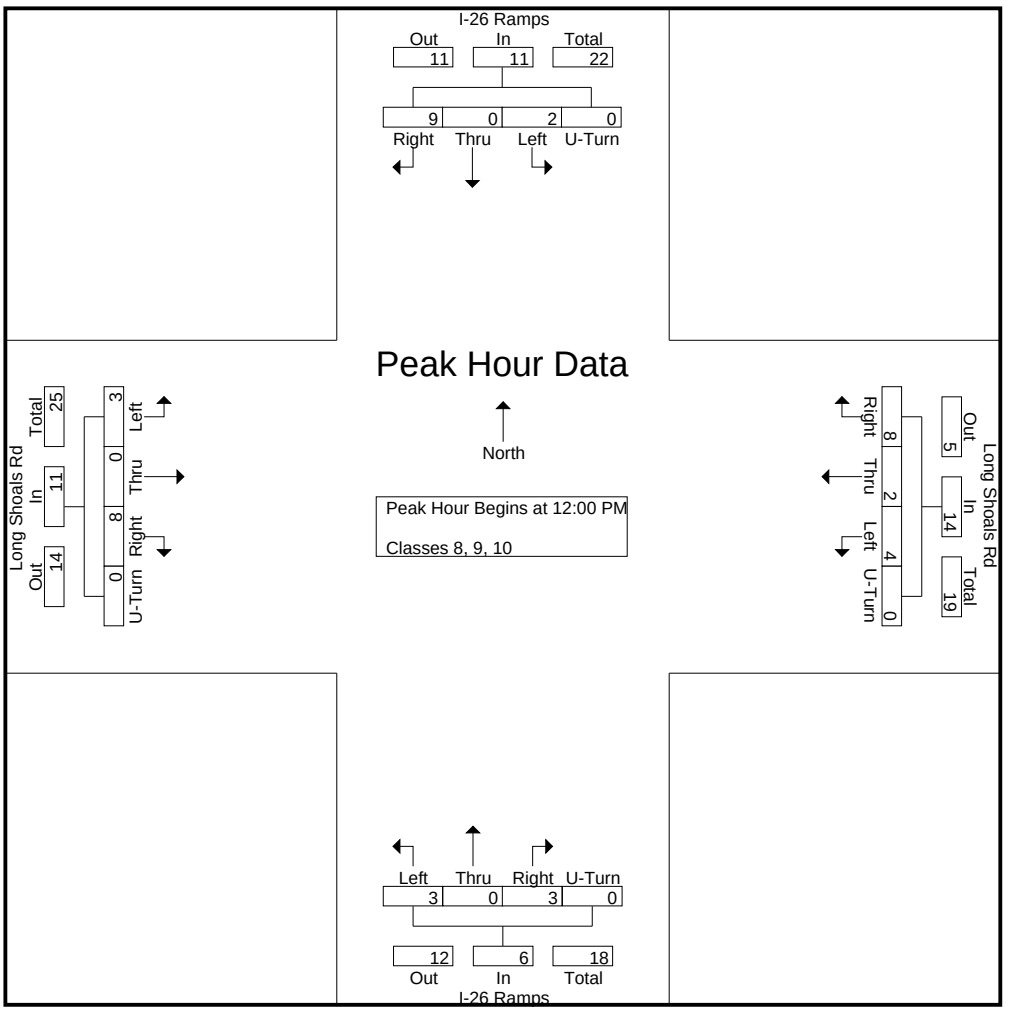

DocuSign Envelope ID: 5C03745C-4B01-4834-A65D-B77F558A4F46

Quality Counts

920 Blairhill Rd, Ste B-106
Charlotte, NC 28217

File Name : 15411703 - I-26 Ramps -- Long Shoals Rd
Site Code : 15411703
Start Date : 4/20/2021
Page No : 1

Groups Printed- Classes 11, 12, 13

	I-26 Ramps Southbound					Long Shoals Rd Westbound					I-26 Ramps Northbound					Long Shoals Rd Eastbound					
Start Time	Left	Thru	Right	U-Turn	App. Total	Left	Thru	Right	U-Turn	App. Total	Left	Thru	Right	U-Turn	App. Total	Left	Thru	Right	U-Turn	App. Total	Int. Total
06:00 AM	0	0	0	0	0	0	0	0	0	0	0	0	0	0	0	0	0	0	0	0	0
06:15 AM	0	0	0	0	0	0	0	0	0	0	0	0	0	0	0	0	0	0	0	0	0
06:30 AM	2	0	0	0	2	0	0	0	0	0	0	0	0	0	0	0	0	0	0	0	2
06:45 AM	0	0	0	0	0	0	0	0	0	0	0	0	0	0	0	0	0	0	0	0	0
Total	2	0	0	0	2	0	0	0	0	0	0	0	0	0	0	0	0	0	0	0	2
07:00 AM	0	0	0	0	0	0	0	0	0	0	0	0	0	0	0	0	0	0	0	0	0
07:15 AM	0	0	0	0	0	0	0	0	0	0	0	0	0	0	0	0	0	0	0	0	0
07:30 AM	0	0	0	0	0	0	0	0	0	0	0	0	0	0	0	0	0	0	0	0	0
07:45 AM	0	0	0	0	0	0	0	0	0	0	0	0	0	0	0	0	0	0	0	0	0
Total	0	0	0	0	0	0	0	0	0	0	0	0	0	0	0	0	0	0	0	0	0
08:00 AM	0	0	0	0	0	0	0	0	0	0	0	0	0	0	0	0	0	0	0	0	0
08:15 AM	1	0	0	0	1	0	0	0	0	0	0	0	0	0	0	0	0	0	0	0	1
08:30 AM	0	0	0	0	0	0	0	0	0	0	0	0	0	0	0	0	0	0	0	0	0
08:45 AM	0	0	0	0	0	0	0	1	0	1	0	0	1	0	1	0	0	0	0	0	2
Total	1	0	0	0	1	0	0	1	0	1	0	0	1	0	1	0	0	0	0	0	3
09:00 AM	0	0	0	0	0	0	0	0	0	0	0	0	0	0	0	0	0	0	0	0	0
09:15 AM	0	0	0	0	0	0	0	1	0	1	0	0	0	0	0	0	0	0	0	0	1
09:30 AM	0	0	0	0	0	0	0	0	0	0	0	0	0	0	0	0	0	0	0	0	0
09:45 AM	0	0	0	0	0	0	0	0	0	0	0	0	0	0	0	0	0	0	0	0	0
Total	0	0	0	0	0	0	0	1	0	1	0	0	0	0	0	0	0	0	0	0	1
10:00 AM	0	0	0	0	0	0	0	0	0	0	0	0	0	0	0	0	0	0	0	0	0
10:15 AM	0	0	0	0	0	0	0	0	0	0	0	0	0	0	0	0	0	0	0	0	0
10:30 AM	0	0	0	0	0	0	0	0	0	0	0	0	0	0	0	0	0	0	0	0	0
10:45 AM	0	0	0	0	0	0	0	0	0	0	0	0	0	0	0	0	0	0	0	0	0
Total	0	0	0	0	0	0	0	0	0	0	0	0	0	0	0	0	0	0	0	0	0
11:00 AM	0	0	0	0	0	0	0	0	0	0	0	0	0	0	0	0	0	0	0	0	0
11:15 AM	0	0	0	0	0	0	0	0	0	0	0	0	0	0	0	0	0	0	0	0	0
11:30 AM	0	0	0	0	0	0	0	0	0	0	0	0	0	0	0	0	0	0	0	0	0
11:45 AM	0	0	0	0	0	0	0	0	0	0	0	0	0	0	0	0	0	0	0	0	0
Total	0	0	0	0	0	0	0	0	0	0	0	0	0	0	0	0	0	0	0	0	0
12:00 PM	0	0	0	0	0	0	0	0	0	0	0	0	0	0	0	0	0	0	0	0	0
12:15 PM	0	0	0	0	0	0	0	0	0	0	0	0	0	0	0	0	0	0	0	0	0
12:30 PM	0	0	0	0	0	0	0	0	0	0	0	0	0	0	0	0	0	0	0	0	0
12:45 PM	0	0	0	0	0	0	0	0	0	0	0	0	0	0	0	0	0	0	0	0	0
Total	0	0	0	0	0	0	0	0	0	0	0	0	0	0	0	0	0	0	0	0	0
01:00 PM	0	0	0	0	0	0	0	0	0	0	0	0	0	0	0	0	0	0	0	0	0
01:15 PM	0	0	0	0	0	0	0	0	0	0	0	0	0	0	0	0	0	0	0	0	0
01:30 PM	0	0	0	0	0	0	0	0	0	0	0	0	0	0	0	0	0	0	0	0	0
01:45 PM	0	0	0	0	0	0	0	0	0	0	0	0	0	0	0	0	0	0	0	0	0
Total	0	0	0	0	0	0	0	0	0	0	0	0	0	0	0	0	0	0	0	0	0
02:00 PM	0	0	0	0	0	0	0	0	0	0	0	0	0	0	0	0	0	0	0	0	0
02:15 PM	0	0	0	0	0	0	0	0	0	0	0	0	0	0	0	0	0	0	0	0	0
02:30 PM	0	0	0	0	0	0	0	0	0	0	0	0	0	0	0	0	0	0	0	0	0
02:45 PM	0	0	0	0	0	0	0	0	0	0	0	0	0	0	0	0	0	0	0	0	0
Total	0	0	0	0	0	0	0	0	0	0	0	0	0	0	0	0	0	0	0	0	0
03:00 PM	0	0	0	0	0	0	0	0	0	0	0	0	0	0	0	0	0	0	0	0	0
03:15 PM	0	0	0	0	0	0	0	0	0	0	0	0	0	0	0	0	0	0	0	0	0
03:30 PM	0	0	0	0	0	0	0	0	0	0	0	0	0	0	0	0	0	0	0	0	0

DocuSign Envelope ID: 5C03745C-4B01-4834-A65D-B77F558A4F46

Quality Counts

920 Blairhill Rd, Ste B-106
Charlotte, NC 28217

File Name : 15411703 - I-26 Ramps -- Long Shoals Rd
Site Code : 15411703
Start Date : 4/20/2021
Page No : 2

Groups Printed- Classes 11, 12, 13

	I-26 Ramps Southbound					Long Shoals Rd Westbound					I-26 Ramps Northbound					Long Shoals Rd Eastbound					
Start Time	Left	Thru	Right	U-Turn	App. Total	Left	Thru	Right	U-Turn	App. Total	Left	Thru	Right	U-Turn	App. Total	Left	Thru	Right	U-Turn	App. Total	Int. Total
03:45 PM	0	0	0	0	0	0	0	0	0	0	0	0	0	0	0	0	0	0	0	0	0
Total	0	0	0	0	0	0	0	0	0	0	0	0	0	0	0	0	0	0	0	0	0
04:00 PM	0	0	0	0	0	0	0	0	0	0	0	0	0	0	0	0	0	0	0	0	0
04:15 PM	0	0	0	0	0	0	0	0	0	0	0	0	0	0	0	0	0	0	0	0	0
04:30 PM	0	0	0	0	0	0	0	0	0	0	0	0	0	0	0	0	0	0	0	0	0
04:45 PM	0	0	0	0	0	0	0	0	0	0	0	0	0	0	0	0	0	0	0	0	0
Total	0	0	0	0	0	0	0	0	0	0	0	0	0	0	0	0	0	0	0	0	0
05:00 PM	0	0	0	0	0	0	0	0	0	0	0	0	0	0	0	0	0	0	0	0	0
05:15 PM	0	0	0	0	0	0	0	0	0	0	0	0	0	0	0	0	0	0	0	0	0
05:30 PM	0	0	0	0	0	0	0	0	0	0	0	0	0	0	0	0	0	0	0	0	0
05:45 PM	0	0	0	0	0	0	0	0	0	0	0	0	0	0	0	0	0	0	0	0	0
Total	0	0	0	0	0	0	0	0	0	0	0	0	0	0	0	0	0	0	0	0	0
06:00 PM	0	0	0	0	0	0	0	0	0	0	0	0	0	0	0	0	0	0	0	0	0
06:15 PM	0	0	0	0	0	0	0	0	0	0	0	0	0	0	0	0	0	0	0	0	0
06:30 PM	0	0	0	0	0	0	0	0	0	0	0	0	0	0	0	0	0	0	0	0	0
06:45 PM	0	0	0	0	0	0	0	0	0	0	0	0	0	0	0	0	0	0	0	0	0
Total	0	0	0	0	0	0	0	0	0	0	0	0	0	0	0	0	0	0	0	0	0
Grand Total	3	0	0	0	3	0	0	2	0	2	0	0	1	0	1	0	0	0	0	0	6
Apprch %	100	0	0	0		0	0	100	0		0	0	100	0		0	0	0	0		
Total %	50	0	0	0	50	0	0	33.3	0	33.3	0	0	16.7	0	16.7	0	0	0	0	0	

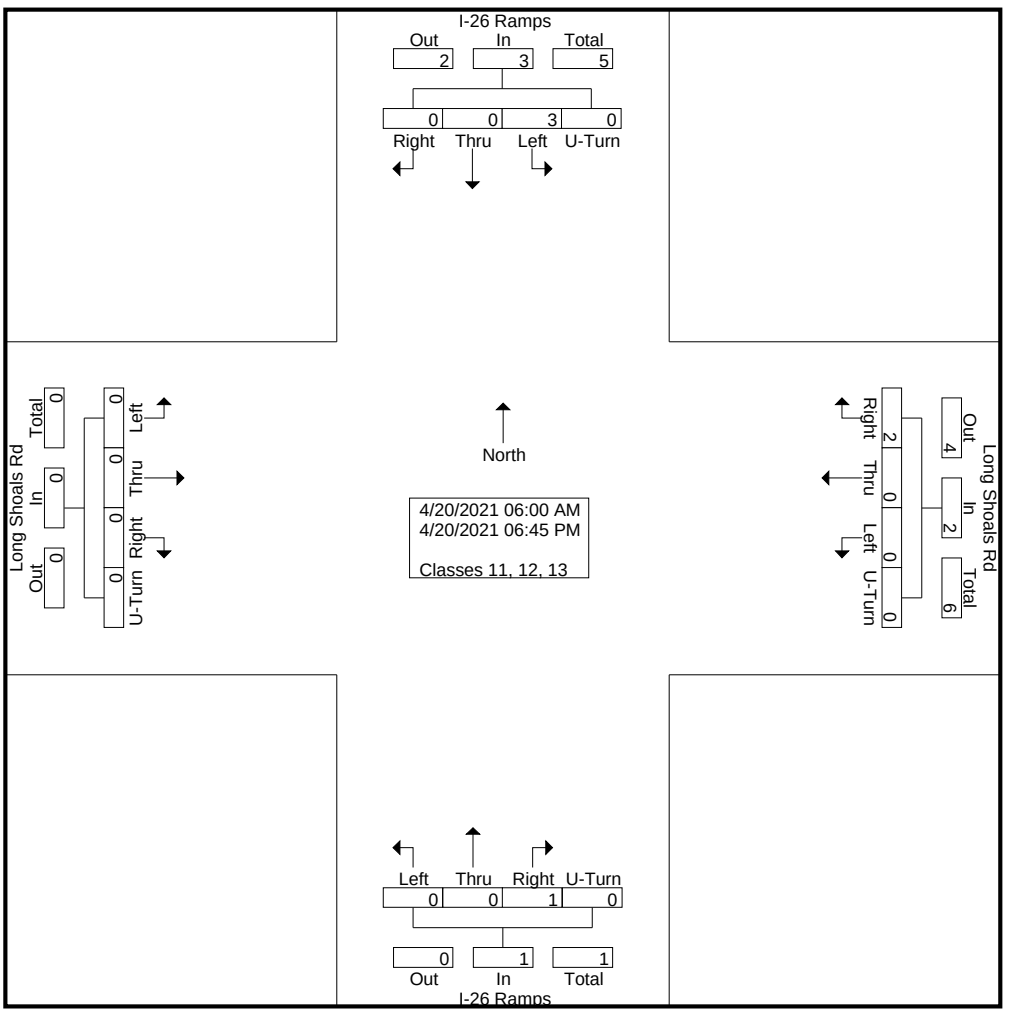

DocuSign Envelope ID: 5C03745C-4B01-4834-A65D-B77F558A4F46

Quality Counts

920 Blairhill Rd, Ste B-106
Charlotte, NC 28217

File Name : 15411703 - I-26 Ramps -- Long Shoals Rd
Site Code : 15411703
Start Date : 4/20/2021
Page No : 3

	I-26 Ramps Southbound					Long Shoals Rd Westbound					I-26 Ramps Northbound					Long Shoals Rd Eastbound					
Start Time	Left	Thru	Right	U-Turn	App. Total	Left	Thru	Right	U-Turn	App. Total	Left	Thru	Right	U-Turn	App. Total	Left	Thru	Right	U-Turn	App. Total	Int. Total
Peak Hour Analysis From 06:00 AM to 11:45 AM - Peak 1 of 1																					
Peak Hour for Entire Intersection Begins at 08:00 AM																					
08:00 AM	0	0	0	0	0	0	0	0	0	0	0	0	0	0	0	0	0	0	0	0	0
08:15 AM	**1**	0	0	0	**1**	0	0	0	0	0	0	0	0	0	0	0	0	0	0	0	1
08:30 AM	0	0	0	0	0	0	0	0	0	0	0	0	0	0	0	0	0	0	0	0	0
08:45 AM	0	0	0	0	0	0	0	**1**	0	**1**	0	0	**1**	0	**1**	0	0	0	0	0	**2**
Total Volume	1	0	0	0	1	0	0	1	0	1	0	0	1	0	1	0	0	0	0	0	3
% App. Total	100	0	0	0		0	0	100	0		0	0	100	0		0	0	0	0		
PHF	.250	.000	.000	.000	.250	.000	.000	.250	.000	.250	.000	.000	.250	.000	.250	.000	.000	.000	.000	.000	.375

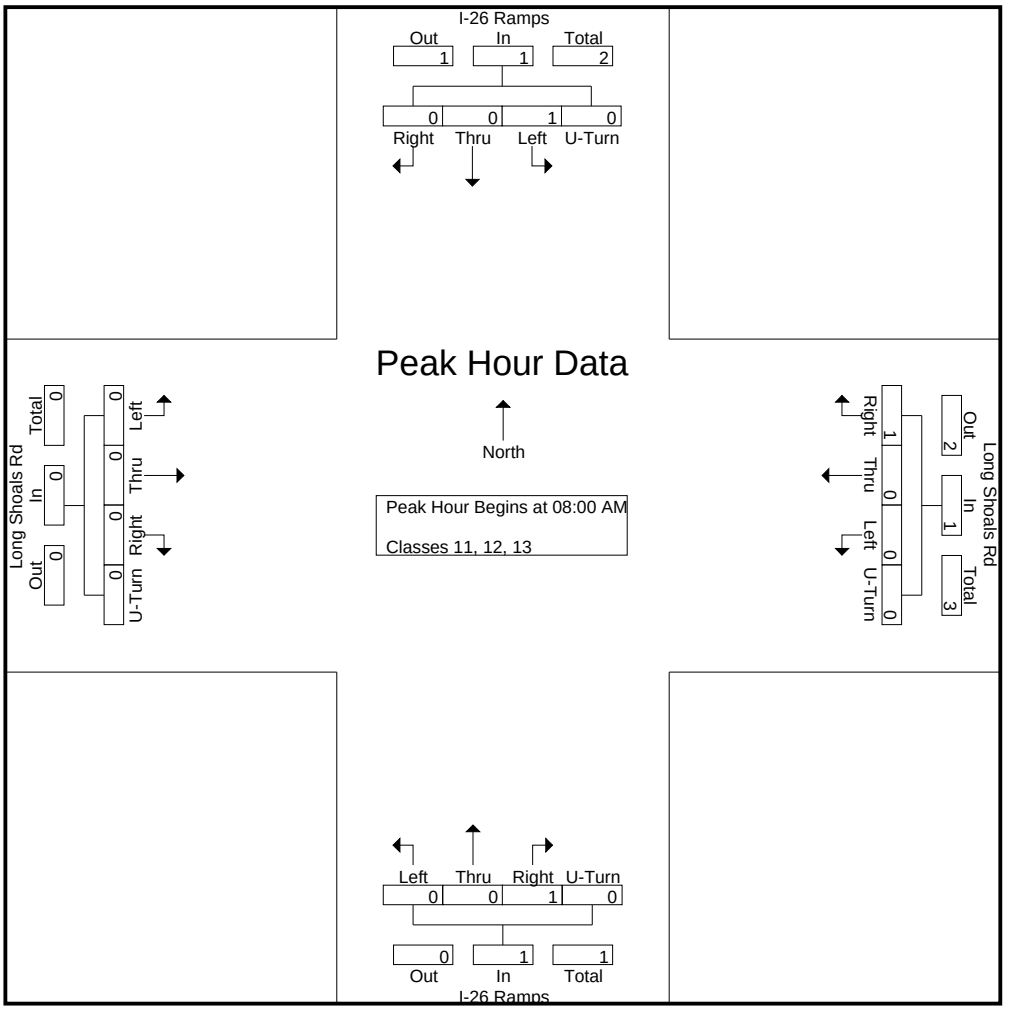

DocuSign Envelope ID: 5C03745C-4B01-4834-A65D-B77F558A4F46

Quality Counts

920 Blairhill Rd, Ste B-106
Charlotte, NC 28217

File Name : 15411703 - I-26 Ramps -- Long Shoals Rd
Site Code : 15411703
Start Date : 4/20/2021
Page No : 4

	I-26 Ramps Southbound					Long Shoals Rd Westbound					I-26 Ramps Northbound					Long Shoals Rd Eastbound					
Start Time	Left	Thru	Right	U-Turn	App. Total	Left	Thru	Right	U-Turn	App. Total	Left	Thru	Right	U-Turn	App. Total	Left	Thru	Right	U-Turn	App. Total	Int. Total
Peak Hour Analysis From 12:00 PM to 06:45 PM - Peak 1 of 1																					
Peak Hour for Entire Intersection Begins at 12:00 PM																					
12:00 PM	0	0	0	0	0	0	0	0	0	0	0	0	0	0	0	0	0	0	0	0	0
12:15 PM	0	0	0	0	0	0	0	0	0	0	0	0	0	0	0	0	0	0	0	0	0
12:30 PM	0	0	0	0	0	0	0	0	0	0	0	0	0	0	0	0	0	0	0	0	0
12:45 PM	0	0	0	0	0	0	0	0	0	0	0	0	0	0	0	0	0	0	0	0	0
Total Volume	0	0	0	0	0	0	0	0	0	0	0	0	0	0	0	0	0	0	0	0	0
% App. Total	0	0	0	0		0	0	0	0		0	0	0	0		0	0	0	0		
PHF	.000	.000	.000	.000	.000	.000	.000	.000	.000	.000	.000	.000	.000	.000	.000	.000	.000	.000	.000	.000	.000

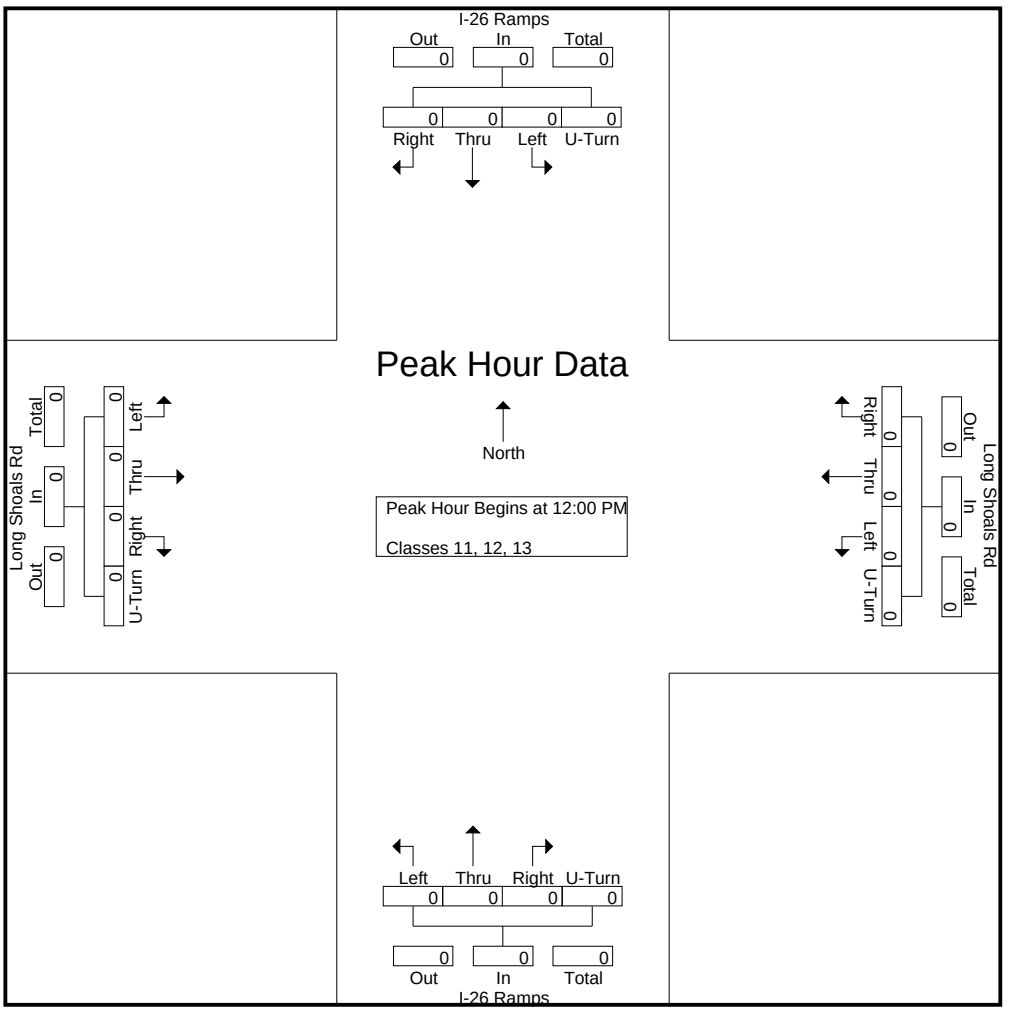

DocuSign Envelope ID: 5C03745C-4B01-4834-A65D-B77F558A4F46

Quality Counts

920 Blairhill Rd, Ste B-106
Charlotte, NC 28217

File Name : 15411703 - I-26 Ramps -- Long Shoals Rd
Site Code : 15411703
Start Date : 4/20/2021
Page No : 1

Groups Printed- Bikes, Peds

	I-26 Ramps Southbound					Long Shoals Rd Westbound					I-26 Ramps Northbound					Long Shoals Rd Eastbound					
Start Time	Left	Thru	Right	Peds	App. Total	Left	Thru	Right	Peds	App. Total	Left	Thru	Right	Peds	App. Total	Left	Thru	Right	Peds	App. Total	Int. Total
06:00 AM	0	0	0	0	0	0	0	0	0	0	0	0	0	0	0	0	0	0	0	0	0
06:15 AM	0	0	0	0	0	0	0	0	0	0	0	0	0	0	0	0	0	0	0	0	0
06:30 AM	0	0	0	0	0	0	0	0	0	0	0	0	0	0	0	0	0	0	0	0	0
06:45 AM	0	0	0	0	0	0	0	0	0	0	0	0	0	0	0	0	0	0	0	0	0
Total	0	0	0	0	0	0	0	0	0	0	0	0	0	0	0	0	0	0	0	0	0
07:00 AM	0	0	0	0	0	0	0	0	0	0	0	0	0	0	0	0	0	0	0	0	0
07:15 AM	0	0	0	0	0	0	0	0	0	0	0	0	0	0	0	0	0	0	0	0	0
07:30 AM	0	0	0	0	0	0	0	0	0	0	0	0	0	0	0	0	0	0	0	0	0
07:45 AM	0	0	0	0	0	0	0	0	0	0	0	0	0	0	0	0	0	0	0	0	0
Total	0	0	0	0	0	0	0	0	0	0	0	0	0	0	0	0	0	0	0	0	0
08:00 AM	0	0	0	0	0	0	0	0	0	0	0	0	0	0	0	0	0	0	0	0	0
08:15 AM	0	0	0	0	0	0	0	0	0	0	0	0	0	0	0	0	0	0	0	0	0
08:30 AM	0	0	0	0	0	0	0	0	0	0	0	0	0	0	0	0	0	0	0	0	0
08:45 AM	0	0	0	0	0	0	0	0	0	0	0	0	0	0	0	0	0	0	0	0	0
Total	0	0	0	0	0	0	0	0	0	0	0	0	0	0	0	0	0	0	0	0	0
09:00 AM	0	0	0	0	0	0	0	0	0	0	0	0	0	0	0	0	0	0	0	0	0
09:15 AM	0	0	0	0	0	0	0	0	0	0	0	0	0	0	0	0	0	0	0	0	0
09:30 AM	0	0	0	0	0	0	0	0	0	0	0	0	0	0	0	0	0	0	0	0	0
09:45 AM	0	0	0	0	0	0	0	0	0	0	0	0	0	0	0	0	0	0	0	0	0
Total	0	0	0	0	0	0	0	0	0	0	0	0	0	0	0	0	0	0	0	0	0
10:00 AM	0	0	0	0	0	0	0	0	0	0	0	0	0	0	0	0	0	0	0	0	0
10:15 AM	0	0	0	0	0	0	0	0	0	0	0	0	0	0	0	0	0	0	0	0	0
10:30 AM	0	0	0	0	0	0	0	0	0	0	0	0	0	0	0	0	0	0	0	0	0
10:45 AM	0	0	0	0	0	0	0	0	0	0	0	0	0	0	0	0	0	0	0	0	0
Total	0	0	0	0	0	0	0	0	0	0	0	0	0	0	0	0	0	0	0	0	0
11:00 AM	0	0	0	0	0	0	0	0	0	0	0	0	0	0	0	0	0	0	0	0	0
11:15 AM	0	0	0	0	0	0	0	0	0	0	0	0	0	0	0	0	0	0	0	0	0
11:30 AM	0	0	0	0	0	0	0	0	0	0	0	0	0	0	0	0	0	0	0	0	0
11:45 AM	0	0	0	0	0	0	0	0	0	0	0	0	0	0	0	0	0	0	0	0	0
Total	0	0	0	0	0	0	0	0	0	0	0	0	0	0	0	0	0	0	0	0	0
12:00 PM	0	0	0	0	0	0	0	0	0	0	0	0	0	0	0	0	0	0	0	0	0
12:15 PM	0	0	0	0	0	0	0	0	0	0	0	0	0	0	0	0	0	0	0	0	0
12:30 PM	0	0	0	0	0	0	0	0	0	0	0	0	0	0	0	0	0	0	0	0	0
12:45 PM	0	0	0	0	0	0	0	0	0	0	0	0	0	0	0	0	0	0	0	0	0
Total	0	0	0	0	0	0	0	0	0	0	0	0	0	0	0	0	0	0	0	0	0
01:00 PM	0	0	0	0	0	0	0	0	0	0	0	0	0	0	0	0	0	0	0	0	0
01:15 PM	0	0	0	0	0	0	0	0	0	0	0	0	0	0	0	0	0	0	0	0	0
01:30 PM	0	0	0	0	0	0	0	0	0	0	0	0	0	0	0	0	0	0	0	0	0
01:45 PM	0	0	0	0	0	0	0	0	0	0	0	0	0	0	0	0	0	0	0	0	0
Total	0	0	0	0	0	0	0	0	0	0	0	0	0	0	0	0	0	0	0	0	0
02:00 PM	0	0	0	0	0	0	0	0	0	0	0	0	0	0	0	0	0	0	0	0	0
02:15 PM	0	0	0	0	0	0	0	0	0	0	0	0	0	1	1	0	0	0	0	0	1
02:30 PM	0	0	0	0	0	0	0	0	0	0	0	0	0	0	0	0	0	0	0	0	0
02:45 PM	0	0	0	0	0	0	0	0	0	0	0	0	0	0	0	0	0	0	0	0	0
Total	0	0	0	0	0	0	0	0	0	0	0	0	0	1	1	0	0	0	0	0	1
03:00 PM	0	0	0	0	0	0	0	0	0	0	0	0	0	0	0	0	0	0	0	0	0
03:15 PM	0	0	0	0	0	0	0	0	0	0	0	0	0	0	0	0	0	0	0	0	0
03:30 PM	0	0	0	0	0	0	0	0	0	0	0	0	0	0	0	0	0	0	0	0	0

DocuSign Envelope ID: 5C03745C-4B01-4834-A65D-B77F558A4F46

Quality Counts

920 Blairhill Rd, Ste B-106
Charlotte, NC 28217

File Name : 15411703 - I-26 Ramps -- Long Shoals Rd
Site Code : 15411703
Start Date : 4/20/2021

Groups Printed- Bikes, Peds

	I-26 Ramps Southbound					Long Shoals Rd Westbound					I-26 Ramps Northbound					Long Shoals Rd Eastbound					
Start Time	Left	Thru	Right	Peds	App. Total	Left	Thru	Right	Peds	App. Total	Left	Thru	Right	Peds	App. Total	Left	Thru	Right	Peds	App. Total	Int. Total
03:45 PM	0	0	0	0	0	0	0	0	0	0	0	0	0	0	0	0	0	0	0	0	0
Total	0	0	0	0	0	0	0	0	0	0	0	0	0	0	0	0	0	0	0	0	0
04:00 PM	0	0	0	0	0	0	0	0	0	0	0	0	0	0	0	0	0	0	0	0	0
04:15 PM	0	0	0	0	0	0	0	0	0	0	0	0	0	0	0	0	0	0	0	0	0
04:30 PM	0	0	0	0	0	0	0	0	1	1	0	0	0	0	0	0	0	0	0	0	1
04:45 PM	0	0	0	0	0	0	0	0	0	0	0	0	0	0	0	0	0	0	0	0	0
Total	0	0	0	0	0	0	0	0	1	1	0	0	0	0	0	0	0	0	0	0	1
05:00 PM	0	0	0	0	0	0	0	0	0	0	0	0	0	0	0	0	0	0	0	0	0
05:15 PM	0	0	0	0	0	0	0	0	0	0	0	0	0	0	0	0	0	0	0	0	0
05:30 PM	0	0	0	0	0	0	0	0	0	0	0	0	0	0	0	0	0	0	0	0	0
05:45 PM	0	0	0	0	0	0	0	0	0	0	0	0	0	0	0	0	0	0	0	0	0
Total	0	0	0	0	0	0	0	0	0	0	0	0	0	0	0	0	0	0	0	0	0
06:00 PM	0	0	0	0	0	0	0	0	0	0	0	0	0	0	0	0	0	0	0	0	0
06:15 PM	0	0	0	0	0	0	0	0	0	0	0	0	0	0	0	0	0	0	0	0	0
06:30 PM	0	0	0	0	0	0	0	0	0	0	0	0	0	0	0	0	0	0	0	0	0
06:45 PM	0	0	0	0	0	0	0	0	0	0	0	0	0	0	0	0	0	0	0	0	0
Total	0	0	0	0	0	0	0	0	0	0	0	0	0	0	0	0	0	0	0	0	0
Grand Total	0	0	0	0	0	0	0	0	1	1	0	0	0	1	1	0	0	0	0	0	2
Apprch %	0	0	0	0		0	0	0	100		0	0	0	100		0	0	0	0		
Total %	0	0	0	0	0	0	0	0	50	50	0	0	0	50	50	0	0	0	0	0	

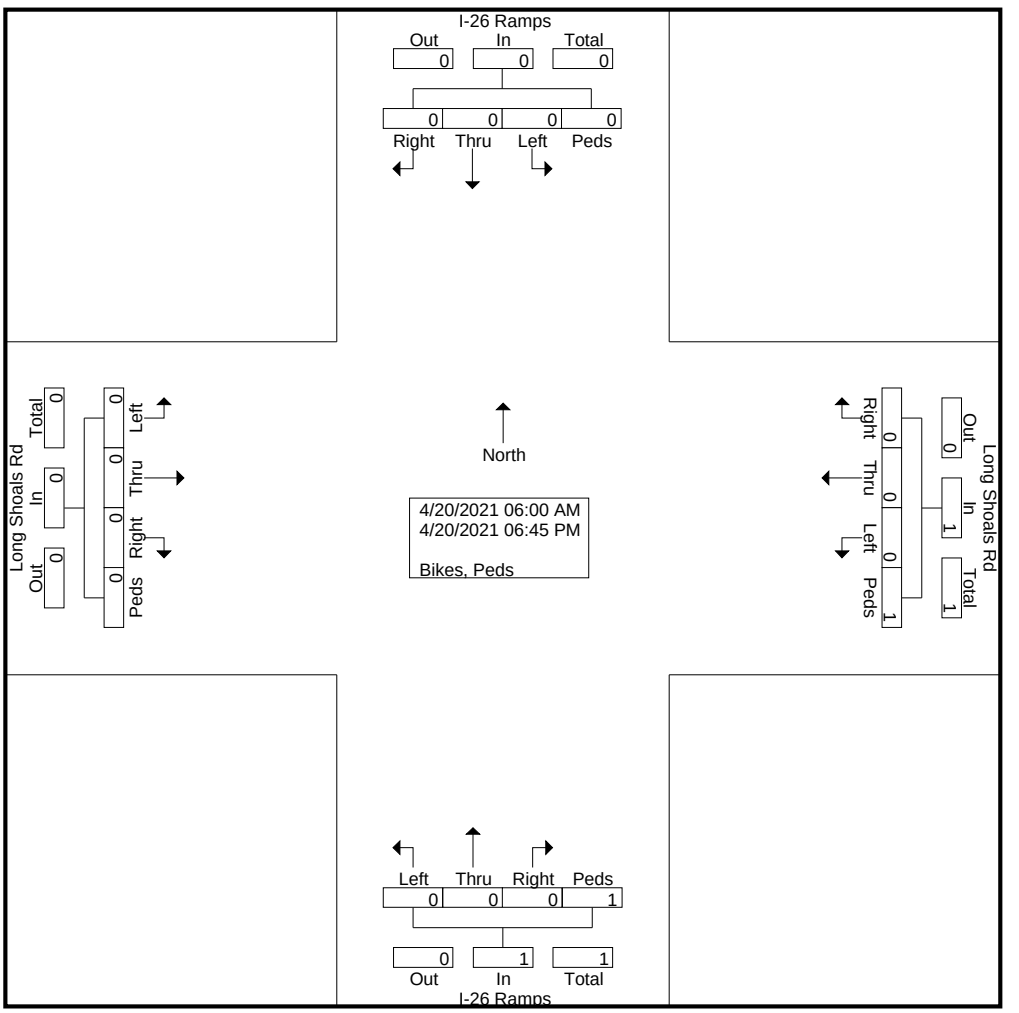

DocuSign Envelope ID: 5C03745C-4B01-4834-A65D-B77F558A4F46

Quality Counts

920 Blairhill Rd, Ste B-106
Charlotte, NC 28217

File Name : 15411703 - I-26 Ramps -- Long Shoals Rd
Site Code : 15411703
Start Date : 4/20/2021
Page No : 3

	I-26 Ramps Southbound					Long Shoals Rd Westbound					I-26 Ramps Northbound					Long Shoals Rd Eastbound					
Start Time	Left	Thru	Right	Peds	App. Total	Left	Thru	Right	Peds	App. Total	Left	Thru	Right	Peds	App. Total	Left	Thru	Right	Peds	App. Total	Int. Total
Peak Hour Analysis From 06:00 AM to 11:45 AM - Peak 1 of 1																					
Peak Hour for Entire Intersection Begins at 06:00 AM																					
06:00 AM	0	0	0	0	0	0	0	0	0	0	0	0	0	0	0	0	0	0	0	0	0
06:15 AM	0	0	0	0	0	0	0	0	0	0	0	0	0	0	0	0	0	0	0	0	0
06:30 AM	0	0	0	0	0	0	0	0	0	0	0	0	0	0	0	0	0	0	0	0	0
06:45 AM	0	0	0	0	0	0	0	0	0	0	0	0	0	0	0	0	0	0	0	0	0
Total Volume	0	0	0	0	0	0	0	0	0	0	0	0	0	0	0	0	0	0	0	0	0
% App. Total	0	0	0	0		0	0	0	0		0	0	0	0		0	0	0	0		
PHF	.000	.000	.000	.000	.000	.000	.000	.000	.000	.000	.000	.000	.000	.000	.000	.000	.000	.000	.000	.000	.000

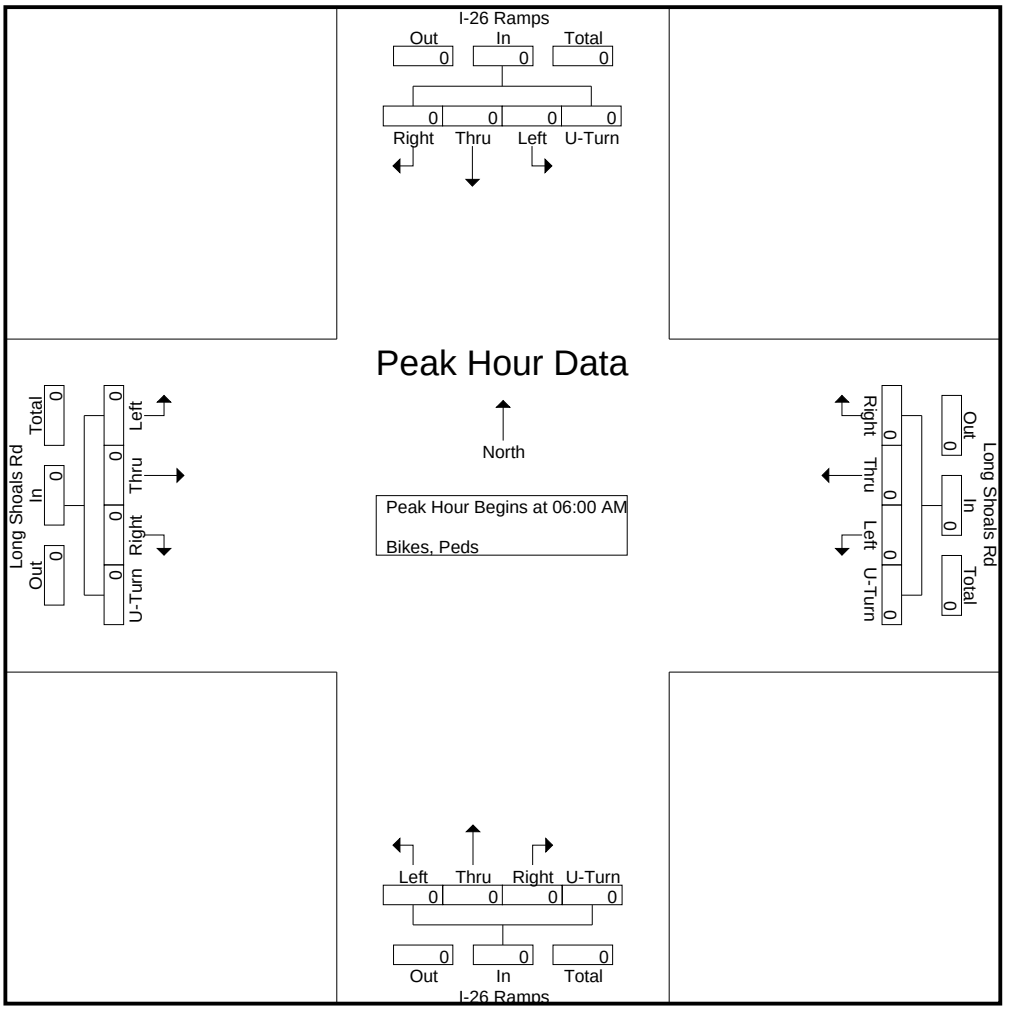

DocuSign Envelope ID: 5C03745C-4B01-4834-A65D-B77F558A4F46

Quality Counts

920 Blairhill Rd, Ste B-106
Charlotte, NC 28217

File Name : 15411703 - I-26 Ramps -- Long Shoals Rd
Site Code : 15411703
Start Date : 4/20/2021
Page No : 4

	I-26 Ramps Southbound					Long Shoals Rd Westbound					I-26 Ramps Northbound					Long Shoals Rd Eastbound					
Start Time	Left	Thru	Right	Peds	App. Total	Left	Thru	Right	Peds	App. Total	Left	Thru	Right	Peds	App. Total	Left	Thru	Right	Peds	App. Total	Int. Total
Peak Hour Analysis From 12:00 PM to 06:45 PM - Peak 1 of 1																					
Peak Hour for Entire Intersection Begins at 01:30 PM																					
01:30 PM	0	0	0	0	0	0	0	0	0	0	0	0	0	0	0	0	0	0	0	0	0
01:45 PM	0	0	0	0	0	0	0	0	0	0	0	0	0	0	0	0	0	0	0	0	0
02:00 PM	0	0	0	0	0	0	0	0	0	0	0	0	0	0	0	0	0	0	0	0	0
02:15 PM	0	0	0	0	0	0	0	0	0	0	0	0	0	**1**	**1**	0	0	0	0	0	**1**
Total Volume	0	0	0	0	0	0	0	0	0	0	0	0	0	1	1	0	0	0	0	0	1
% App. Total	0	0	0	0		0	0	0	0		0	0	0	100		0	0	0	0		
PHF	.000	.000	.000	.000	.000	.000	.000	.000	.000	.000	.000	.000	.000	.250	.250	.000	.000	.000	.000	.000	.250

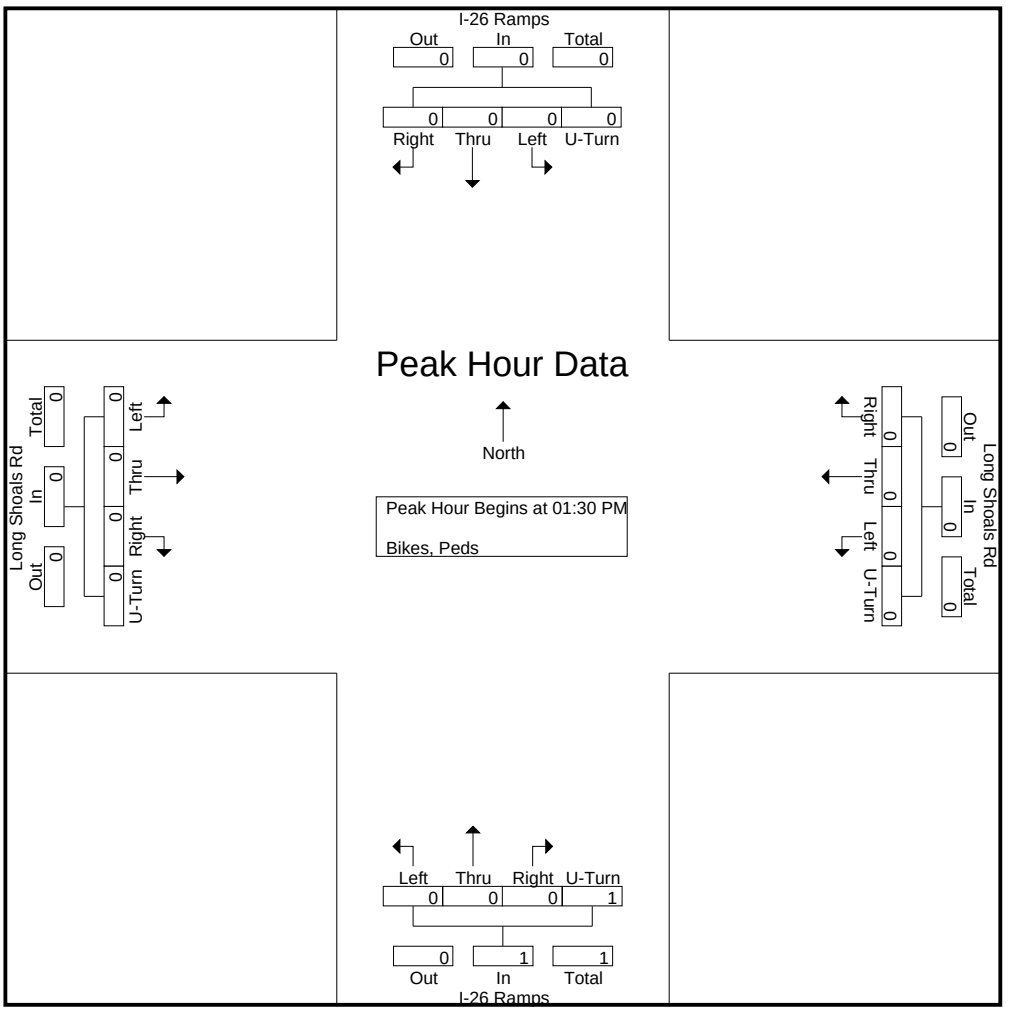

DocuSign Envelope ID: 5C03745C-4B01-4834-A65D-B77F558A4F46

QUALITY COUNTS LLC
920 Blairhill Rd, Suite 106, Charlotte, NC 28217
704.215.4616

Count Number: 15411704
County: Buncombe
City: Asheville
Division: 13

Location: Brevard Rd & Wedgefield Dr
General Location Type: Intersection
Count Type: Turning Movement (Classification)
Count Start Date: 4/20/2021
Time: 6:00 AM – 7:00 PM
Volume: 26,593

Maximum Temperature: 69° F
Minimum Temperature: 40° F
Precipitation: 0.00 in
Snowfall: 0.0 in
Average Sky Cover: 0.2
Weather Conditions: Clear

1. **School in Session:** Yes
2. **Pedestrians Counted**: Yes
3. **Disabled Pedestrians Present**: No
   Description and Approaches Used: N/A
4. **Counted By**: Austin Whitelaw
5. **Data Processor**: Jon B
6. **Signal Inventory**: N/A
7. **Data Collection Method**: Video/Count Board
8. **Equipment Operating Properly**: Yes
9. **Area Lighting Present**: Yes
10. **Nearest Roadway Stop Sign < 300 ft:** No
    If yes, list approaches: N/A
11. **Nearest Traffic Signal < 300 ft:** No
    If yes, list approaches: N/A
12. **At-Grade Railroad Crossing Present (<200 ft):** No
    If yes, list approaches & distance: N/A
13. **Other:**

↑ North

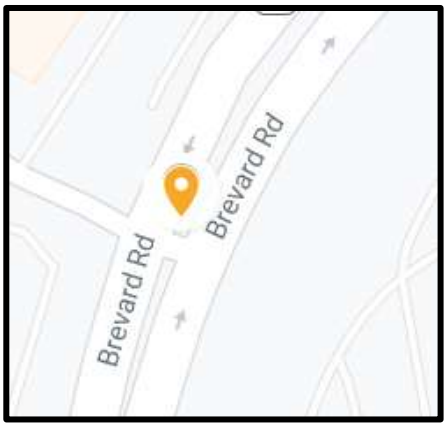

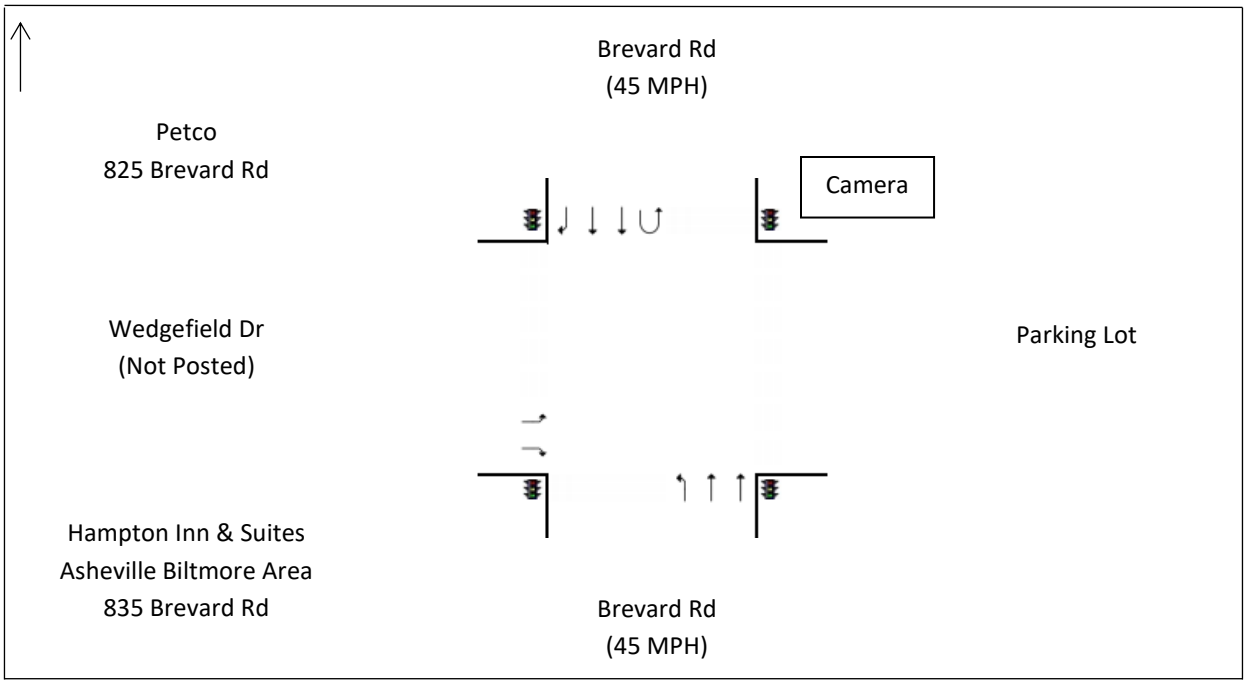

DocuSign Envelope ID: 5C03745C-4B01-4834-A65D-B77F558A4F46

Quality Counts

920 Blairhill Rd, Ste B-106
Charlotte, NC 28217

File Name : 15411704 - Brevard Rd -- Wedgefield Dr
Site Code : 15411704
Start Date : 4/20/2021
Page No : 1

Groups Printed- Classes 1, 2, 3 - Classes 4, 5, 6, 7 - Classes 8, 9, 10 - Classes 11, 12, 13

	Brevard Rd Southbound					Westbound					Brevard Rd Northbound					Wedgefield Dr Eastbound					
Start Time	Left	Thru	Right	U-Turn	App. Total	Left	Thru	Right	U-Turn	App. Total	Left	Thru	Right	U-Turn	App. Total	Left	Thru	Right	U-Turn	App. Total	Int. Total
06:00 AM	0	55	3	0	58	0	0	0	0	0	2	52	0	0	54	9	0	12	0	21	133
06:15 AM	0	87	7	0	94	0	0	0	0	0	2	67	0	0	69	13	0	6	0	19	182
06:30 AM	0	136	7	1	144	0	0	0	0	0	4	106	0	0	110	9	0	12	0	21	275
06:45 AM	0	164	9	0	173	0	0	0	0	0	4	125	0	0	129	12	0	11	0	23	325
Total	0	442	26	1	469	0	0	0	0	0	12	350	0	0	362	43	0	41	0	84	915
07:00 AM	0	147	10	0	157	0	0	0	0	0	5	173	0	0	178	14	0	13	0	27	362
07:15 AM	0	162	7	4	173	0	0	0	0	0	5	203	0	0	208	19	0	14	0	33	414
07:30 AM	0	210	10	1	221	0	0	0	0	0	9	219	0	1	229	13	0	19	0	32	482
07:45 AM	0	266	20	2	288	0	0	0	0	0	8	231	0	0	239	19	0	13	0	32	559
Total	0	785	47	7	839	0	0	0	0	0	27	826	0	1	854	65	0	59	0	124	1817
08:00 AM	0	226	21	0	247	0	0	0	0	0	10	224	0	0	234	21	0	26	0	47	528
08:15 AM	0	244	18	0	262	0	0	0	0	0	13	201	0	1	215	19	0	16	0	35	512
08:30 AM	0	166	18	2	186	0	0	0	0	0	5	197	0	1	203	18	0	15	0	33	422
08:45 AM	0	200	8	2	210	0	0	0	0	0	13	184	0	1	198	30	0	15	0	45	453
Total	0	836	65	4	905	0	0	0	0	0	41	806	0	3	850	88	0	72	0	160	1915
09:00 AM	0	172	14	1	187	0	0	0	0	0	7	145	0	0	152	17	0	8	0	25	364
09:15 AM	0	182	18	4	204	0	0	0	0	0	1	167	0	1	169	13	0	16	0	29	402
09:30 AM	0	186	24	2	212	0	0	0	0	0	12	198	0	1	211	18	0	10	0	28	451
09:45 AM	0	188	12	3	203	0	0	0	0	0	12	150	0	0	162	12	0	20	0	32	397
Total	0	728	68	10	806	0	0	0	0	0	32	660	0	2	694	60	0	54	0	114	1614
10:00 AM	0	202	20	2	224	0	0	0	0	0	14	171	0	0	185	25	0	19	0	44	453
10:15 AM	0	215	17	1	233	0	0	0	0	0	9	171	0	1	181	21	0	11	0	32	446
10:30 AM	0	210	8	2	220	0	0	0	0	0	8	189	0	1	198	15	0	15	0	30	448
10:45 AM	0	249	16	0	265	0	0	0	0	0	10	175	0	0	185	9	0	13	0	22	472
Total	0	876	61	5	942	0	0	0	0	0	41	706	0	2	749	70	0	58	0	128	1819
11:00 AM	0	211	26	1	238	0	0	0	0	0	8	189	0	1	198	16	0	15	0	31	467
11:15 AM	0	198	16	3	217	0	0	0	0	0	8	196	0	0	204	18	0	8	0	26	447
11:30 AM	0	220	14	1	235	0	0	0	0	0	10	183	0	0	193	16	0	12	0	28	456
11:45 AM	0	246	18	4	268	0	0	0	0	0	13	213	0	0	226	19	0	20	0	39	533
Total	0	875	74	9	958	0	0	0	0	0	39	781	0	1	821	69	0	55	0	124	1903
12:00 PM	0	234	11	1	246	0	0	0	0	0	14	209	0	0	223	18	0	20	0	38	507
12:15 PM	0	257	11	2	270	0	0	0	0	0	13	295	0	1	309	10	0	16	0	26	605
12:30 PM	0	259	15	4	278	0	0	0	0	0	11	266	0	0	277	15	0	14	0	29	584
12:45 PM	0	261	11	2	274	0	0	0	0	0	10	275	0	1	286	9	0	7	0	16	576
Total	0	1011	48	9	1068	0	0	0	0	0	48	1045	0	2	1095	52	0	57	0	109	2272
01:00 PM	0	268	7	2	277	0	0	0	0	0	17	258	0	0	275	7	0	14	0	21	573
01:15 PM	0	271	23	0	294	0	0	0	0	0	7	252	0	1	260	7	0	22	0	29	583
01:30 PM	0	243	10	3	256	0	0	0	0	0	7	255	0	0	262	13	0	13	0	26	544
01:45 PM	0	267	19	2	288	0	0	0	0	0	9	227	0	0	236	16	0	11	0	27	551
Total	0	1049	59	7	1115	0	0	0	0	0	40	992	0	1	1033	43	0	60	0	103	2251
02:00 PM	0	241	24	2	267	0	0	0	0	0	16	278	0	1	295	7	0	11	0	18	580
02:15 PM	0	252	25	2	279	0	0	0	0	0	11	283	0	0	294	21	0	17	0	38	611
02:30 PM	0	239	19	3	261	0	0	0	0	0	11	283	0	0	294	24	0	17	0	41	596
02:45 PM	0	277	25	3	305	0	0	0	0	0	9	295	0	0	304	10	0	12	0	22	631
Total	0	1009	93	10	1112	0	0	0	0	0	47	1139	0	1	1187	62	0	57	0	119	2418
03:00 PM	0	267	24	6	297	0	0	0	0	0	17	313	0	0	330	22	0	17	0	39	666
03:15 PM	0	285	34	1	320	0	0	0	0	0	11	330	0	0	341	16	0	24	0	40	701
03:30 PM	0	233	22	5	260	0	0	0	0	0	11	315	0	1	327	9	0	18	0	27	614

DocuSign Envelope ID: 5C03745C-4B01-4834-A65D-B77F558A4F46

Quality Counts

920 Blairhill Rd, Ste B-106
Charlotte, NC 28217

File Name : 15411704 - Brevard Rd -- Wedgefield Dr
Site Code : 15411704
Start Date : 4/20/2021

Groups Printed- Classes 1, 2, 3 - Classes 4, 5, 6, 7 - Classes 8, 9, 10 - Classes 11, 12, 13

	Brevard Rd Southbound					Westbound					Brevard Rd Northbound					Wedgefield Dr Eastbound					
Start Time	Left	Thru	Right	U-Turn	App. Total	Left	Thru	Right	U-Turn	App. Total	Left	Thru	Right	U-Turn	App. Total	Left	Thru	Right	U-Turn	App. Total	Int. Total
03:45 PM	0	267	26	4	297	0	0	0	0	0	21	293	0	1	315	25	0	16	0	41	653
Total	0	1052	106	16	1174	0	0	0	0	0	60	1251	0	2	1313	72	0	75	0	147	2634
04:00 PM	0	266	20	2	288	0	0	0	0	0	12	331	0	1	344	18	0	29	0	47	679
04:15 PM	0	299	26	0	325	0	0	0	0	0	19	303	0	0	322	23	0	13	0	36	683
04:30 PM	0	262	24	2	288	0	0	0	0	0	14	298	0	1	313	16	0	18	0	34	635
04:45 PM	0	274	22	1	297	0	0	0	0	0	11	312	0	1	324	12	0	5	0	17	638
Total	0	1101	92	5	1198	0	0	0	0	0	56	1244	0	3	1303	69	0	65	0	134	2635
05:00 PM	0	286	28	1	315	0	0	0	0	0	19	318	0	0	337	33	0	22	0	55	707
05:15 PM	0	278	19	1	298	0	0	0	0	0	14	356	0	0	370	12	0	16	0	28	696
05:30 PM	0	256	23	0	279	0	0	0	0	0	11	334	0	1	346	18	0	25	0	43	668
05:45 PM	0	233	26	1	260	0	0	0	0	0	15	255	0	1	271	11	0	29	0	40	571
Total	0	1053	96	3	1152	0	0	0	0	0	59	1263	0	2	1324	74	0	92	0	166	2642
06:00 PM	0	216	16	1	233	0	0	0	0	0	18	230	0	0	248	10	0	19	0	29	510
06:15 PM	0	181	22	2	205	0	0	0	0	0	17	177	0	0	194	9	0	20	0	29	428
06:30 PM	0	160	17	2	179	0	0	0	0	0	23	199	0	1	223	14	0	19	0	33	435
06:45 PM	0	137	13	1	151	0	0	0	0	0	14	190	0	1	205	11	0	18	0	29	385
Total	0	694	68	6	768	0	0	0	0	0	72	796	0	2	870	44	0	76	0	120	1758
Grand Total	0	11511	903	92	12506	0	0	0	0	0	574	11859	0	22	12455	811	0	821	0	1632	26593
Apprch %	0	92	7.2	0.7		0	0	0	0		4.6	95.2	0	0.2		49.7	0	50.3	0		
Total %	0	43.3	3.4	0.3	47	0	0	0	0	0	2.2	44.6	0	0.1	46.8	3	0	3.1	0	6.1	
Classes 1, 2, 3	0	10941	844	87	11872	0	0	0	0	0	544	11154	0	22	11720	768	0	777	0	1545	25137
% Classes 1, 2, 3	0	95	93.5	94.6	94.9	0	0	0	0	0	94.8	94.1	0	100	94.1	94.7	0	94.6	0	94.7	94.5
Classes 4, 5, 6, 7	0	378	50	5	433	0	0	0	0	0	28	538	0	0	566	38	0	41	0	79	1078
% Classes 4, 5, 6, 7	0	3.3	5.5	5.4	3.5	0	0	0	0	0	4.9	4.5	0	0	4.5	4.7	0	5	0	4.8	4.1
Classes 8, 9, 10	0	192	9	0	201	0	0	0	0	0	2	167	0	0	169	5	0	3	0	8	378
% Classes 8, 9, 10	0	1.7	1	0	1.6	0	0	0	0	0	0.3	1.4	0	0	1.4	0.6	0	0.4	0	0.5	1.4
Classes 11, 12, 13	0	0	0	0	0	0	0	0	0	0	0	0	0	0	0	0	0	0	0	0	0
% Classes 11, 12, 13	0	0	0	0	0	0	0	0	0	0	0	0	0	0	0	0	0	0	0	0	0

DocuSign Envelope ID: 5C03745C-4B01-4834-A65D-B77F558A4F46

Quality Counts

920 Blairhill Rd, Ste B-106
Charlotte, NC 28217

File Name : 15411704 - Brevard Rd -- Wedgefield Dr
Site Code : 15411704
Start Date : 4/20/2021
Page No : 3

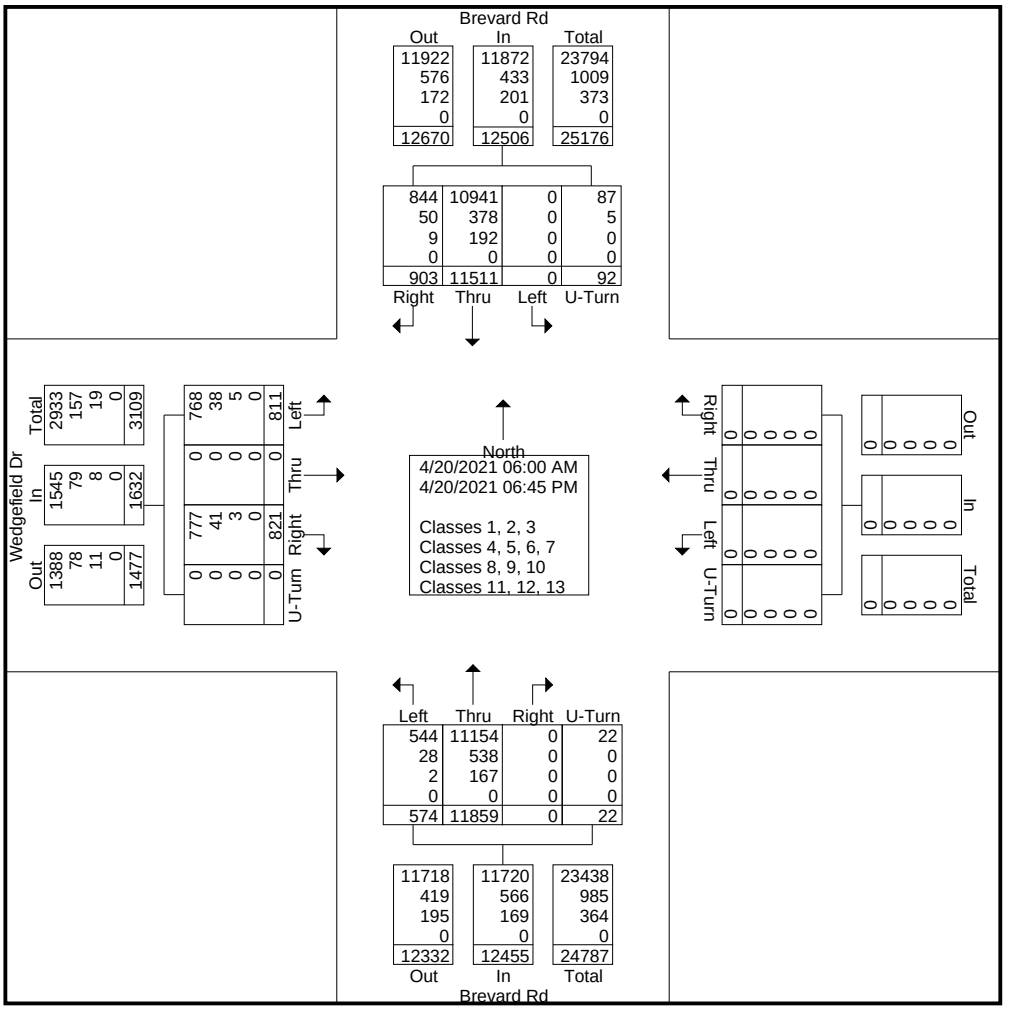

DocuSign Envelope ID: 5C03745C-4B01-4834-A65D-B77F558A4F46

Quality Counts

920 Blairhill Rd, Ste B-106
Charlotte, NC 28217

File Name : 15411704 - Brevard Rd -- Wedgefield Dr
Site Code : 15411704
Start Date : 4/20/2021
Page No : 4

	Brevard Rd Southbound					Westbound					Brevard Rd Northbound					Wedgefield Dr Eastbound					
Start Time	Left	Thru	Right	U-Turn	App. Total	Left	Thru	Right	U-Turn	App. Total	Left	Thru	Right	U-Turn	App. Total	Left	Thru	Right	U-Turn	App. Total	Int. Total
Peak Hour Analysis From 06:00 AM to 11:45 AM - Peak 1 of 1																					
Peak Hour for Entire Intersection Begins at 07:30 AM																					
07:30 AM	0	210	10	1	221	0	0	0	0	0	9	219	0	**1**	229	13	0	19	0	32	482
07:45 AM	0	**266**	20	**2**	**288**	0	0	0	0	0	8	**231**	0	0	**239**	19	0	13	0	32	**559**
08:00 AM	0	226	**21**	0	247	0	0	0	0	0	10	224	0	0	234	**21**	0	**26**	0	**47**	528
08:15 AM	0	244	18	0	262	0	0	0	0	0	**13**	201	0	1	215	19	0	16	0	35	512
Total Volume	0	946	69	3	1018	0	0	0	0	0	40	875	0	2	917	72	0	74	0	146	2081
% App. Total	0	92.9	6.8	0.3		0	0	0	0		4.4	95.4	0	0.2		49.3	0	50.7	0		
PHF	.000	.889	.821	.375	.884	.000	.000	.000	.000	.000	.769	.947	.000	.500	.959	.857	.000	.712	.000	.777	.931

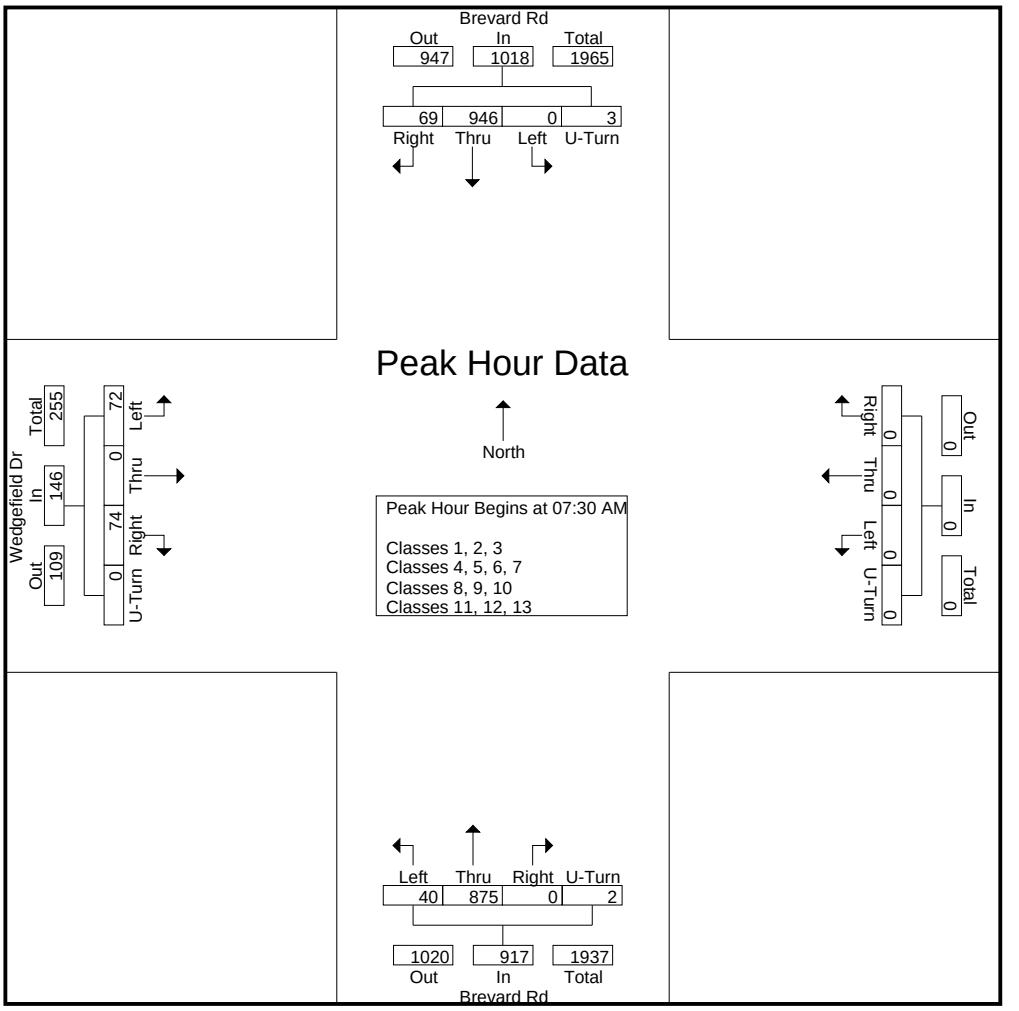

DocuSign Envelope ID: 5C03745C-4B01-4834-A65D-B77F558A4F46

Quality Counts

920 Blairhill Rd, Ste B-106
Charlotte, NC 28217

File Name : 15411704 - Brevard Rd -- Wedgefield Dr
Site Code : 15411704
Start Date : 4/20/2021

	Brevard Rd Southbound					Westbound					Brevard Rd Northbound					Wedgefield Dr Eastbound					
Start Time	Left	Thru	Right	U-Turn	App. Total	Left	Thru	Right	U-Turn	App. Total	Left	Thru	Right	U-Turn	App. Total	Left	Thru	Right	U-Turn	App. Total	Int. Total
Peak Hour Analysis From 12:00 PM to 06:45 PM - Peak 1 of 1																					
Peak Hour for Entire Intersection Begins at 04:45 PM																					
04:45 PM	0	274	22	**1**	297	0	0	0	0	0	11	312	0	**1**	324	12	0	5	0	17	638
05:00 PM	0	**286**	**28**	1	**315**	0	0	0	0	0	**19**	318	0	0	337	**33**	0	22	0	**55**	**707**
05:15 PM	0	278	19	1	298	0	0	0	0	0	14	**356**	0	0	**370**	12	0	16	0	28	696
05:30 PM	0	256	23	0	279	0	0	0	0	0	11	334	0	1	346	18	0	**25**	0	43	668
Total Volume	0	1094	92	3	1189	0	0	0	0	0	55	1320	0	2	1377	75	0	68	0	143	2709
% App. Total	0	92	7.7	0.3		0	0	0	0		4	95.9	0	0.1		52.4	0	47.6	0		
PHF	.000	.956	.821	.750	.944	.000	.000	.000	.000	.000	.724	.927	.000	.500	.930	.568	.000	.680	.000	.650	.958

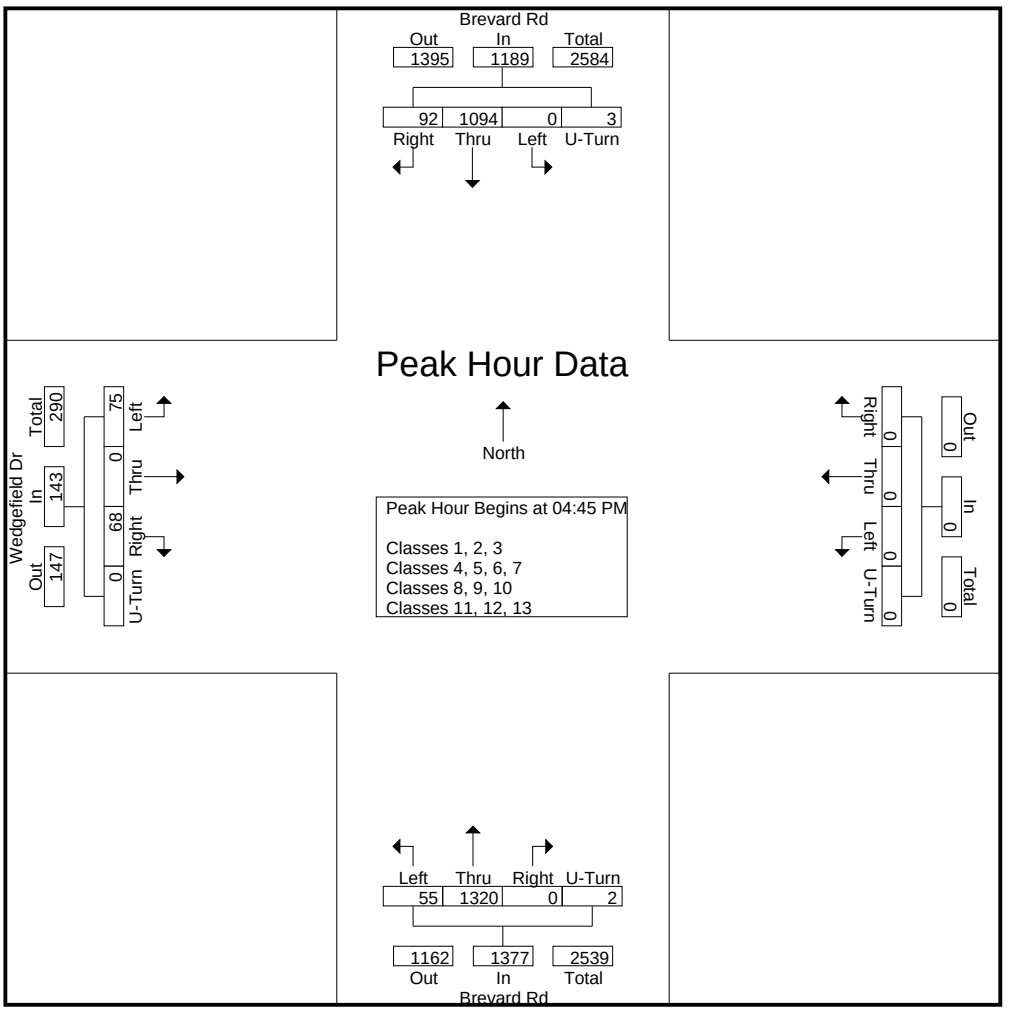

DocuSign Envelope ID: 5C03745C-4B01-4834-A65D-B77F558A4F46

Quality Counts

920 Blairhill Rd, Ste B-106
Charlotte, NC 28217

File Name : 15411704 - Brevard Rd -- Wedgefield Dr
Site Code : 15411704
Start Date : 4/20/2021
Page No : 1

Groups Printed- Classes 1, 2, 3

	Brevard Rd Southbound					Westbound					Brevard Rd Northbound					Wedgefield Dr Eastbound					
Start Time	Left	Thru	Right	U-Turn	App. Total	Left	Thru	Right	U-Turn	App. Total	Left	Thru	Right	U-Turn	App. Total	Left	Thru	Right	U-Turn	App. Total	Int. Total
06:00 AM	0	55	3	0	58	0	0	0	0	0	2	47	0	0	49	8	0	12	0	20	127
06:15 AM	0	83	7	0	90	0	0	0	0	0	2	58	0	0	60	13	0	6	0	19	169
06:30 AM	0	132	5	1	138	0	0	0	0	0	3	95	0	0	98	9	0	10	0	19	255
06:45 AM	0	152	7	0	159	0	0	0	0	0	4	108	0	0	112	11	0	9	0	20	291
Total	0	422	22	1	445	0	0	0	0	0	11	308	0	0	319	41	0	37	0	78	842
07:00 AM	0	137	7	0	144	0	0	0	0	0	4	157	0	0	161	13	0	11	0	24	329
07:15 AM	0	152	7	3	162	0	0	0	0	0	5	197	0	0	202	19	0	13	0	32	396
07:30 AM	0	202	10	0	212	0	0	0	0	0	9	204	0	1	214	12	0	18	0	30	456
07:45 AM	0	253	20	2	275	0	0	0	0	0	8	216	0	0	224	19	0	12	0	31	530
Total	0	744	44	5	793	0	0	0	0	0	26	774	0	1	801	63	0	54	0	117	1711
08:00 AM	0	218	20	0	238	0	0	0	0	0	9	207	0	0	216	19	0	26	0	45	499
08:15 AM	0	231	18	0	249	0	0	0	0	0	12	180	0	1	193	19	0	16	0	35	477
08:30 AM	0	155	18	2	175	0	0	0	0	0	5	184	0	1	190	17	0	15	0	32	397
08:45 AM	0	184	8	2	194	0	0	0	0	0	12	169	0	1	182	28	0	14	0	42	418
Total	0	788	64	4	856	0	0	0	0	0	38	740	0	3	781	83	0	71	0	154	1791
09:00 AM	0	160	13	1	174	0	0	0	0	0	7	132	0	0	139	17	0	8	0	25	338
09:15 AM	0	168	17	4	189	0	0	0	0	0	1	149	0	1	151	13	0	16	0	29	369
09:30 AM	0	169	22	2	193	0	0	0	0	0	9	174	0	1	184	16	0	8	0	24	401
09:45 AM	0	169	12	3	184	0	0	0	0	0	10	131	0	0	141	11	0	19	0	30	355
Total	0	666	64	10	740	0	0	0	0	0	27	586	0	2	615	57	0	51	0	108	1463
10:00 AM	0	190	18	1	209	0	0	0	0	0	14	154	0	0	168	24	0	17	0	41	418
10:15 AM	0	196	16	1	213	0	0	0	0	0	8	154	0	1	163	18	0	10	0	28	404
10:30 AM	0	196	6	2	204	0	0	0	0	0	8	177	0	1	186	14	0	14	0	28	418
10:45 AM	0	228	16	0	244	0	0	0	0	0	10	156	0	0	166	8	0	13	0	21	431
Total	0	810	56	4	870	0	0	0	0	0	40	641	0	2	683	64	0	54	0	118	1671
11:00 AM	0	201	21	1	223	0	0	0	0	0	8	180	0	1	189	15	0	15	0	30	442
11:15 AM	0	189	15	2	206	0	0	0	0	0	7	179	0	0	186	16	0	8	0	24	416
11:30 AM	0	204	12	1	217	0	0	0	0	0	10	167	0	0	177	15	0	11	0	26	420
11:45 AM	0	232	18	4	254	0	0	0	0	0	12	192	0	0	204	19	0	20	0	39	497
Total	0	826	66	8	900	0	0	0	0	0	37	718	0	1	756	65	0	54	0	119	1775
12:00 PM	0	222	9	1	232	0	0	0	0	0	14	195	0	0	209	17	0	19	0	36	477
12:15 PM	0	244	10	2	256	0	0	0	0	0	12	273	0	1	286	10	0	15	0	25	567
12:30 PM	0	247	15	4	266	0	0	0	0	0	11	248	0	0	259	13	0	13	0	26	551
12:45 PM	0	245	11	2	258	0	0	0	0	0	10	262	0	1	273	9	0	7	0	16	547
Total	0	958	45	9	1012	0	0	0	0	0	47	978	0	2	1027	49	0	54	0	103	2142
01:00 PM	0	245	5	2	252	0	0	0	0	0	16	244	0	0	260	7	0	14	0	21	533
01:15 PM	0	258	22	0	280	0	0	0	0	0	6	239	0	1	246	6	0	21	0	27	553
01:30 PM	0	228	10	3	241	0	0	0	0	0	7	235	0	0	242	12	0	12	0	24	507
01:45 PM	0	255	17	2	274	0	0	0	0	0	9	211	0	0	220	16	0	10	0	26	520
Total	0	986	54	7	1047	0	0	0	0	0	38	929	0	1	968	41	0	57	0	98	2113
02:00 PM	0	235	23	2	260	0	0	0	0	0	16	264	0	1	281	7	0	10	0	17	558
02:15 PM	0	239	23	2	264	0	0	0	0	0	10	265	0	0	275	21	0	17	0	38	577
02:30 PM	0	225	19	3	247	0	0	0	0	0	11	269	0	0	280	23	0	16	0	39	566
02:45 PM	0	266	22	3	291	0	0	0	0	0	9	287	0	0	296	9	0	11	0	20	607
Total	0	965	87	10	1062	0	0	0	0	0	46	1085	0	1	1132	60	0	54	0	114	2308
03:00 PM	0	257	23	5	285	0	0	0	0	0	17	295	0	0	312	21	0	16	0	37	634
03:15 PM	0	269	30	1	300	0	0	0	0	0	9	318	0	0	327	16	0	23	0	39	666
03:30 PM	0	223	19	5	247	0	0	0	0	0	11	299	0	1	311	8	0	17	0	25	583

DocuSign Envelope ID: 5C03745C-4B01-4834-A65D-B77F558A4F46

Quality Counts

920 Blairhill Rd, Ste B-106
Charlotte, NC 28217

File Name : 15411704 - Brevard Rd -- Wedgefield Dr
Site Code : 15411704
Start Date : 4/20/2021
Page No : 2

Groups Printed- Classes 1, 2, 3

	Brevard Rd Southbound					Westbound					Brevard Rd Northbound					Wedgefield Dr Eastbound					
Start Time	Left	Thru	Right	U-Turn	App. Total	Left	Thru	Right	U-Turn	App. Total	Left	Thru	Right	U-Turn	App. Total	Left	Thru	Right	U-Turn	App. Total	Int. Total
03:45 PM	0	253	24	4	281	0	0	0	0	0	18	284	0	1	303	22	0	12	0	34	618
Total	0	1002	96	15	1113	0	0	0	0	0	55	1196	0	2	1253	67	0	68	0	135	2501
04:00 PM	0	250	20	2	272	0	0	0	0	0	12	317	0	1	330	17	0	26	0	43	645
04:15 PM	0	287	22	0	309	0	0	0	0	0	19	290	0	0	309	21	0	13	0	34	652
04:30 PM	0	259	24	2	285	0	0	0	0	0	14	282	0	1	297	15	0	16	0	31	613
04:45 PM	0	269	20	1	290	0	0	0	0	0	11	300	0	1	312	12	0	5	0	17	619
Total	0	1065	86	5	1156	0	0	0	0	0	56	1189	0	3	1248	65	0	60	0	125	2529
05:00 PM	0	281	26	1	308	0	0	0	0	0	19	310	0	0	329	33	0	20	0	53	690
05:15 PM	0	274	17	1	292	0	0	0	0	0	11	340	0	0	351	11	0	16	0	27	670
05:30 PM	0	253	23	0	276	0	0	0	0	0	11	328	0	1	340	18	0	24	0	42	658
05:45 PM	0	227	26	1	254	0	0	0	0	0	15	251	0	1	267	8	0	29	0	37	558
Total	0	1035	92	3	1130	0	0	0	0	0	56	1229	0	2	1287	70	0	89	0	159	2576
06:00 PM	0	212	16	1	229	0	0	0	0	0	16	225	0	0	241	10	0	18	0	28	498
06:15 PM	0	174	22	2	198	0	0	0	0	0	16	173	0	0	189	9	0	19	0	28	415
06:30 PM	0	154	17	2	173	0	0	0	0	0	21	196	0	1	218	13	0	19	0	32	423
06:45 PM	0	134	13	1	148	0	0	0	0	0	14	187	0	1	202	11	0	18	0	29	379
Total	0	674	68	6	748	0	0	0	0	0	67	781	0	2	850	43	0	74	0	117	1715
Grand Total	0	10941	844	87	11872	0	0	0	0	0	544	11154	0	22	11720	768	0	777	0	1545	25137
Apprch %	0	92.2	7.1	0.7		0	0	0	0		4.6	95.2	0	0.2		49.7	0	50.3	0		
Total %	0	43.5	3.4	0.3	47.2	0	0	0	0	0	2.2	44.4	0	0.1	46.6	3.1	0	3.1	0	6.1	

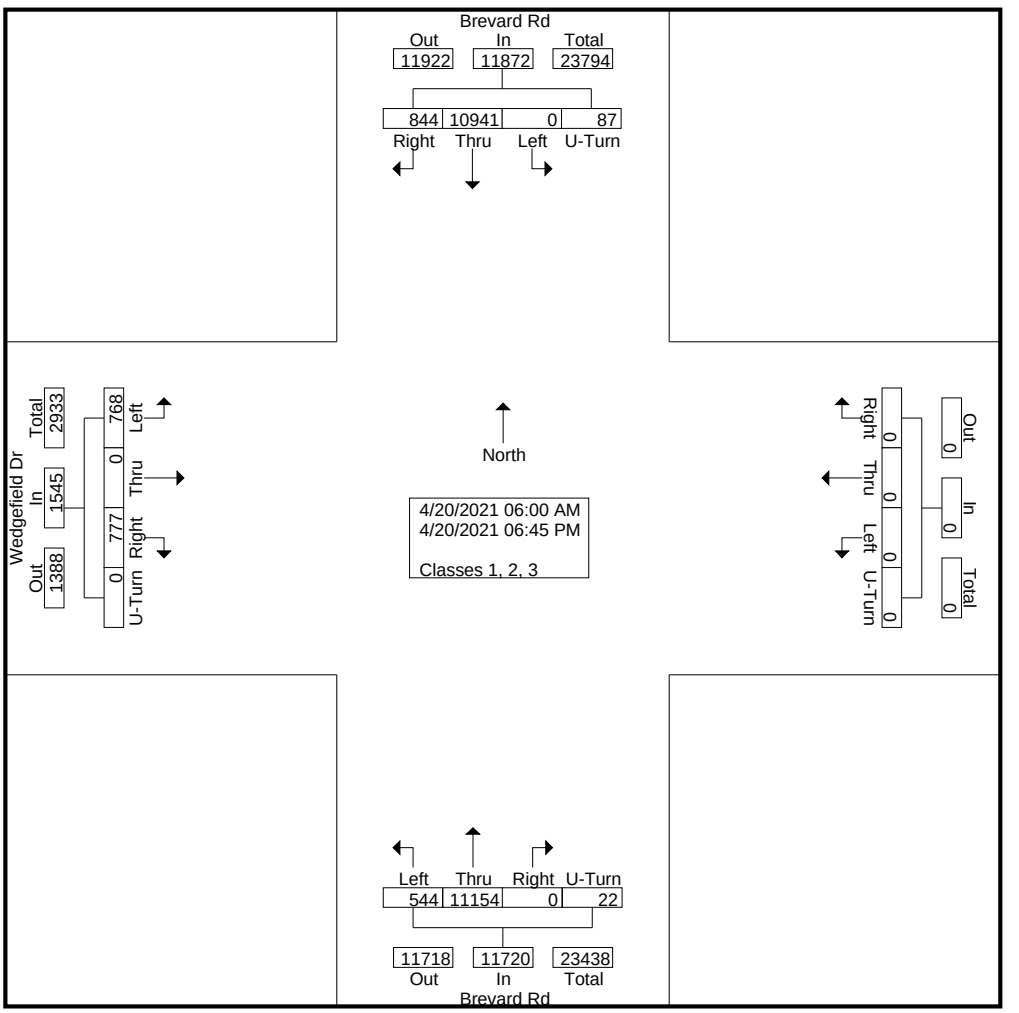

DocuSign Envelope ID: 5C03745C-4B01-4834-A65D-B77F558A4F46

Quality Counts

920 Blairhill Rd, Ste B-106
Charlotte, NC 28217

File Name : 15411704 - Brevard Rd -- Wedgefield Dr
Site Code : 15411704
Start Date : 4/20/2021
Page No : 3

	Brevard Rd Southbound					Westbound					Brevard Rd Northbound					Wedgefield Dr Eastbound					
Start Time	Left	Thru	Right	U-Turn	App. Total	Left	Thru	Right	U-Turn	App. Total	Left	Thru	Right	U-Turn	App. Total	Left	Thru	Right	U-Turn	App. Total	Int. Total
Peak Hour Analysis From 06:00 AM to 11:45 AM - Peak 1 of 1																					
Peak Hour for Entire Intersection Begins at 07:30 AM																					
07:30 AM	0	202	10	0	212	0	0	0	0	0	9	204	0	**1**	214	12	0	18	0	30	456
07:45 AM	0	**253**	**20**	**2**	**275**	0	0	0	0	0	8	**216**	0	0	**224**	**19**	0	12	0	31	**530**
08:00 AM	0	218	20	0	238	0	0	0	0	0	9	207	0	0	216	19	0	**26**	0	**45**	499
08:15 AM	0	231	18	0	249	0	0	0	0	0	**12**	180	0	1	193	19	0	16	0	35	477
Total Volume	0	904	68	2	974	0	0	0	0	0	38	807	0	2	847	69	0	72	0	141	1962
% App. Total	0	92.8	7	0.2		0	0	0	0		4.5	95.3	0	0.2		48.9	0	51.1	0		
PHF	.000	.893	.850	.250	.885	.000	.000	.000	.000	.000	.792	.934	.000	.500	.945	.908	.000	.692	.000	.783	.925

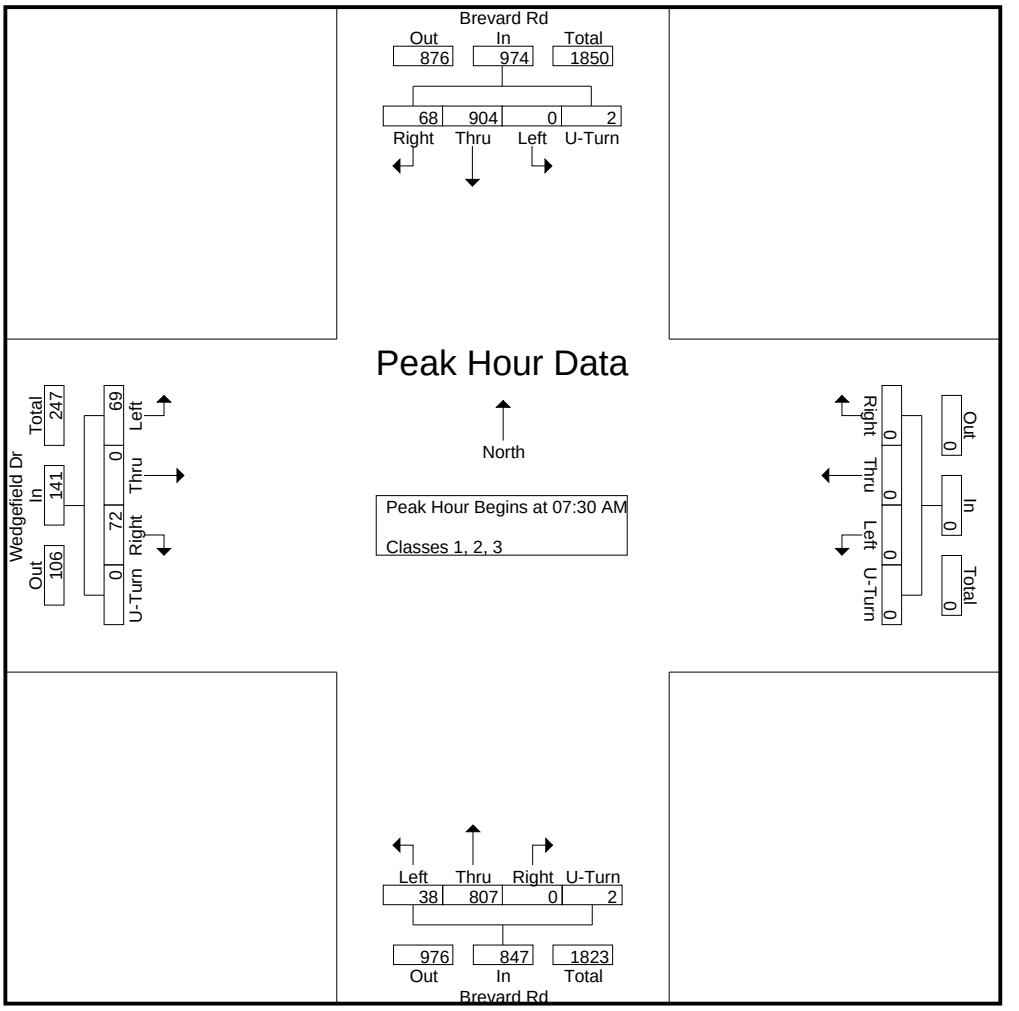

DocuSign Envelope ID: 5C03745C-4B01-4834-A65D-B77F558A4F46

Quality Counts

920 Blairhill Rd, Ste B-106
Charlotte, NC 28217

File Name : 15411704 - Brevard Rd -- Wedgefield Dr
Site Code : 15411704
Start Date : 4/20/2021
Page No : 4

	Brevard Rd Southbound					Westbound					Brevard Rd Northbound					Wedgefield Dr Eastbound					
Start Time	Left	Thru	Right	U-Turn	App. Total	Left	Thru	Right	U-Turn	App. Total	Left	Thru	Right	U-Turn	App. Total	Left	Thru	Right	U-Turn	App. Total	Int. Total
Peak Hour Analysis From 12:00 PM to 06:45 PM - Peak 1 of 1																					
Peak Hour for Entire Intersection Begins at 04:45 PM																					
04:45 PM	0	269	20	**1**	290	0	0	0	0	0	11	300	0	**1**	312	12	0	5	0	17	619
05:00 PM	0	**281**	**26**	1	**308**	0	0	0	0	0	**19**	310	0	0	329	**33**	0	20	0	**53**	**690**
05:15 PM	0	274	17	1	292	0	0	0	0	0	11	**340**	0	0	**351**	11	0	16	0	27	670
05:30 PM	0	253	23	0	276	0	0	0	0	0	11	328	0	1	340	18	0	**24**	0	42	658
Total Volume	0	1077	86	3	1166	0	0	0	0	0	52	1278	0	2	1332	74	0	65	0	139	2637
% App. Total	0	92.4	7.4	0.3		0	0	0	0		3.9	95.9	0	0.2		53.2	0	46.8	0		
PHF	.000	.958	.827	.750	.946	.000	.000	.000	.000	.000	.684	.940	.000	.500	.949	.561	.000	.677	.000	.656	.955

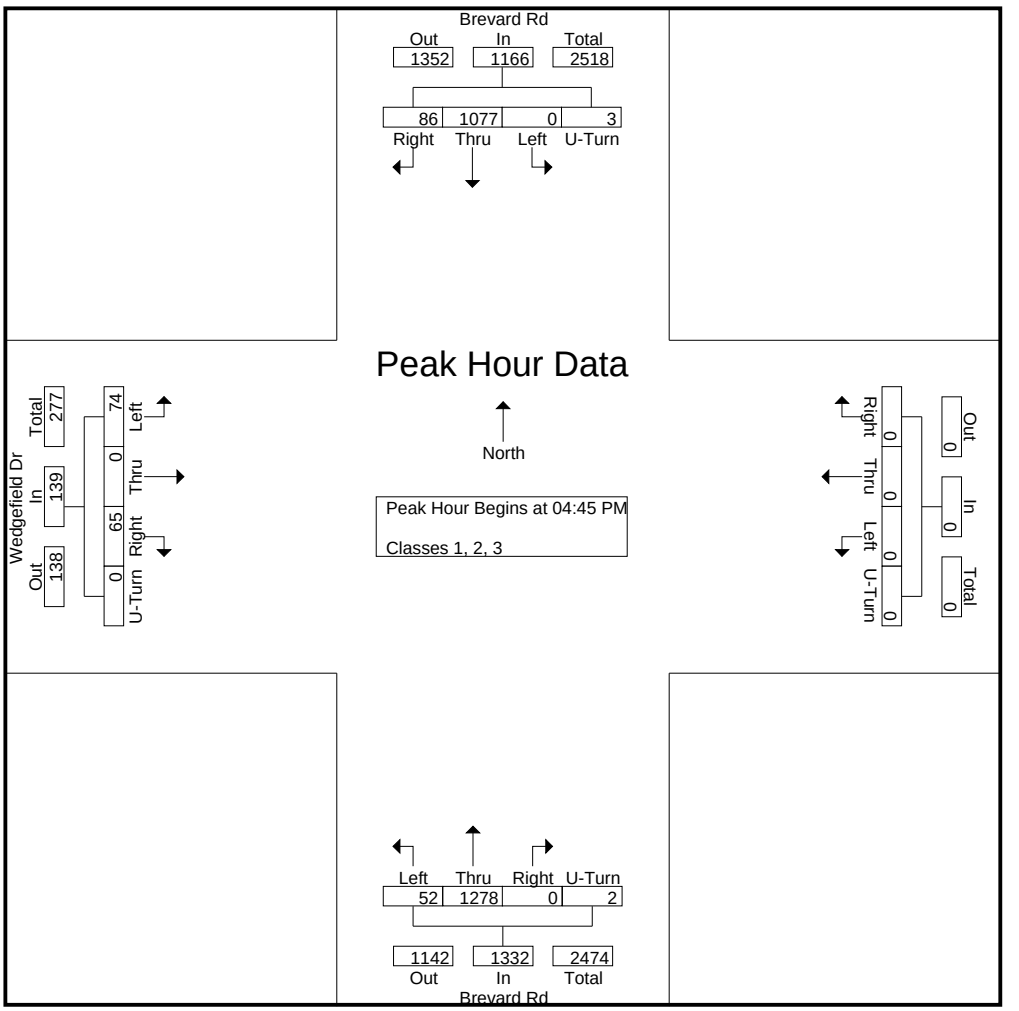

DocuSign Envelope ID: 5C03745C-4B01-4834-A65D-B77F558A4F46

Quality Counts

920 Blairhill Rd, Ste B-106
Charlotte, NC 28217

File Name : 15411704 - Brevard Rd -- Wedgefield Dr
Site Code : 15411704
Start Date : 4/20/2021
Page No : 1

Groups Printed- Classes 4, 5, 6, 7

	Brevard Rd Southbound					Westbound					Brevard Rd Northbound					Wedgefield Dr Eastbound					
Start Time	Left	Thru	Right	U-Turn	App. Total	Left	Thru	Right	U-Turn	App. Total	Left	Thru	Right	U-Turn	App. Total	Left	Thru	Right	U-Turn	App. Total	Int. Total
06:00 AM	0	0	0	0	0	0	0	0	0	0	0	3	0	0	3	1	0	0	0	1	4
06:15 AM	0	2	0	0	2	0	0	0	0	0	0	9	0	0	9	0	0	0	0	0	11
06:30 AM	0	2	0	0	2	0	0	0	0	0	1	11	0	0	12	0	0	2	0	2	16
06:45 AM	0	10	1	0	11	0	0	0	0	0	0	14	0	0	14	1	0	2	0	3	28
Total	0	14	1	0	15	0	0	0	0	0	1	37	0	0	38	2	0	4	0	6	59
07:00 AM	0	7	3	0	10	0	0	0	0	0	1	12	0	0	13	0	0	2	0	2	25
07:15 AM	0	7	0	1	8	0	0	0	0	0	0	6	0	0	6	0	0	0	0	0	14
07:30 AM	0	5	0	1	6	0	0	0	0	0	0	10	0	0	10	1	0	1	0	2	18
07:45 AM	0	8	0	0	8	0	0	0	0	0	0	9	0	0	9	0	0	1	0	1	18
Total	0	27	3	2	32	0	0	0	0	0	1	37	0	0	38	1	0	4	0	5	75
08:00 AM	0	7	1	0	8	0	0	0	0	0	1	12	0	0	13	2	0	0	0	2	23
08:15 AM	0	7	0	0	7	0	0	0	0	0	1	13	0	0	14	0	0	0	0	0	21
08:30 AM	0	6	0	0	6	0	0	0	0	0	0	10	0	0	10	1	0	0	0	1	17
08:45 AM	0	11	0	0	11	0	0	0	0	0	1	14	0	0	15	2	0	1	0	3	29
Total	0	31	1	0	32	0	0	0	0	0	3	49	0	0	52	5	0	1	0	6	90
09:00 AM	0	5	1	0	6	0	0	0	0	0	0	13	0	0	13	0	0	0	0	0	19
09:15 AM	0	5	1	0	6	0	0	0	0	0	0	10	0	0	10	0	0	0	0	0	16
09:30 AM	0	11	1	0	12	0	0	0	0	0	2	17	0	0	19	2	0	2	0	4	35
09:45 AM	0	14	0	0	14	0	0	0	0	0	2	11	0	0	13	1	0	1	0	2	29
Total	0	35	3	0	38	0	0	0	0	0	4	51	0	0	55	3	0	3	0	6	99
10:00 AM	0	6	2	1	9	0	0	0	0	0	0	15	0	0	15	1	0	2	0	3	27
10:15 AM	0	14	1	0	15	0	0	0	0	0	1	15	0	0	16	3	0	1	0	4	35
10:30 AM	0	12	1	0	13	0	0	0	0	0	0	8	0	0	8	1	0	1	0	2	23
10:45 AM	0	14	0	0	14	0	0	0	0	0	0	16	0	0	16	0	0	0	0	0	30
Total	0	46	4	1	51	0	0	0	0	0	1	54	0	0	55	5	0	4	0	9	115
11:00 AM	0	8	5	0	13	0	0	0	0	0	0	8	0	0	8	1	0	0	0	1	22
11:15 AM	0	6	1	1	8	0	0	0	0	0	1	14	0	0	15	2	0	0	0	2	25
11:30 AM	0	13	1	0	14	0	0	0	0	0	0	12	0	0	12	1	0	1	0	2	28
11:45 AM	0	9	0	0	9	0	0	0	0	0	1	12	0	0	13	0	0	0	0	0	22
Total	0	36	7	1	44	0	0	0	0	0	2	46	0	0	48	4	0	1	0	5	97
12:00 PM	0	7	2	0	9	0	0	0	0	0	0	10	0	0	10	0	0	1	0	1	20
12:15 PM	0	8	1	0	9	0	0	0	0	0	1	16	0	0	17	0	0	1	0	1	27
12:30 PM	0	8	0	0	8	0	0	0	0	0	0	13	0	0	13	2	0	1	0	3	24
12:45 PM	0	9	0	0	9	0	0	0	0	0	0	10	0	0	10	0	0	0	0	0	19
Total	0	32	3	0	35	0	0	0	0	0	1	49	0	0	50	2	0	3	0	5	90
01:00 PM	0	11	2	0	13	0	0	0	0	0	1	9	0	0	10	0	0	0	0	0	23
01:15 PM	0	8	1	0	9	0	0	0	0	0	1	11	0	0	12	1	0	1	0	2	23
01:30 PM	0	11	0	0	11	0	0	0	0	0	0	13	0	0	13	1	0	1	0	2	26
01:45 PM	0	11	2	0	13	0	0	0	0	0	0	14	0	0	14	0	0	1	0	1	28
Total	0	41	5	0	46	0	0	0	0	0	2	47	0	0	49	2	0	3	0	5	100
02:00 PM	0	3	0	0	3	0	0	0	0	0	0	10	0	0	10	0	0	1	0	1	14
02:15 PM	0	10	1	0	11	0	0	0	0	0	1	14	0	0	15	0	0	0	0	0	26
02:30 PM	0	7	0	0	7	0	0	0	0	0	0	12	0	0	12	1	0	0	0	1	20
02:45 PM	0	8	2	0	10	0	0	0	0	0	0	5	0	0	5	1	0	1	0	2	17
Total	0	28	3	0	31	0	0	0	0	0	1	41	0	0	42	2	0	2	0	4	77
03:00 PM	0	6	1	1	8	0	0	0	0	0	0	14	0	0	14	1	0	1	0	2	24
03:15 PM	0	12	4	0	16	0	0	0	0	0	1	11	0	0	12	0	0	1	0	1	29
03:30 PM	0	7	3	0	10	0	0	0	0	0	0	14	0	0	14	1	0	1	0	2	26

DocuSign Envelope ID: 5C03745C-4B01-4834-A65D-B77F558A4F46

Quality Counts

920 Blairhill Rd, Ste B-106
Charlotte, NC 28217

File Name : 15411704 - Brevard Rd -- Wedgefield Dr
Site Code : 15411704
Start Date : 4/20/2021
Page No : 2

Groups Printed- Classes 4, 5, 6, 7

	Brevard Rd Southbound					Westbound					Brevard Rd Northbound					Wedgefield Dr Eastbound					
Start Time	Left	Thru	Right	U-Turn	App. Total	Left	Thru	Right	U-Turn	App. Total	Left	Thru	Right	U-Turn	App. Total	Left	Thru	Right	U-Turn	App. Total	Int. Total
03:45 PM	0	12	2	0	14	0	0	0	0	0	3	7	0	0	10	1	0	4	0	5	29
Total	0	37	10	1	48	0	0	0	0	0	4	46	0	0	50	3	0	7	0	10	108
04:00 PM	0	12	0	0	12	0	0	0	0	0	0	12	0	0	12	1	0	2	0	3	27
04:15 PM	0	9	4	0	13	0	0	0	0	0	0	10	0	0	10	2	0	0	0	2	25
04:30 PM	0	1	0	0	1	0	0	0	0	0	0	12	0	0	12	1	0	2	0	3	16
04:45 PM	0	2	2	0	4	0	0	0	0	0	0	9	0	0	9	0	0	0	0	0	13
Total	0	24	6	0	30	0	0	0	0	0	0	43	0	0	43	4	0	4	0	8	81
05:00 PM	0	3	2	0	5	0	0	0	0	0	0	8	0	0	8	0	0	2	0	2	15
05:15 PM	0	3	2	0	5	0	0	0	0	0	3	14	0	0	17	1	0	0	0	1	23
05:30 PM	0	2	0	0	2	0	0	0	0	0	0	3	0	0	3	0	0	1	0	1	6
05:45 PM	0	3	0	0	3	0	0	0	0	0	0	3	0	0	3	3	0	0	0	3	9
Total	0	11	4	0	15	0	0	0	0	0	3	28	0	0	31	4	0	3	0	7	53
06:00 PM	0	4	0	0	4	0	0	0	0	0	2	4	0	0	6	0	0	1	0	1	11
06:15 PM	0	5	0	0	5	0	0	0	0	0	1	3	0	0	4	0	0	1	0	1	10
06:30 PM	0	5	0	0	5	0	0	0	0	0	2	2	0	0	4	1	0	0	0	1	10
06:45 PM	0	2	0	0	2	0	0	0	0	0	0	1	0	0	1	0	0	0	0	0	3
Total	0	16	0	0	16	0	0	0	0	0	5	10	0	0	15	1	0	2	0	3	34
Grand Total	0	378	50	5	433	0	0	0	0	0	28	538	0	0	566	38	0	41	0	79	1078
Apprch %	0	87.3	11.5	1.2		0	0	0	0		4.9	95.1	0	0		48.1	0	51.9	0		
Total %	0	35.1	4.6	0.5	40.2	0	0	0	0	0	2.6	49.9	0	0	52.5	3.5	0	3.8	0	7.3	

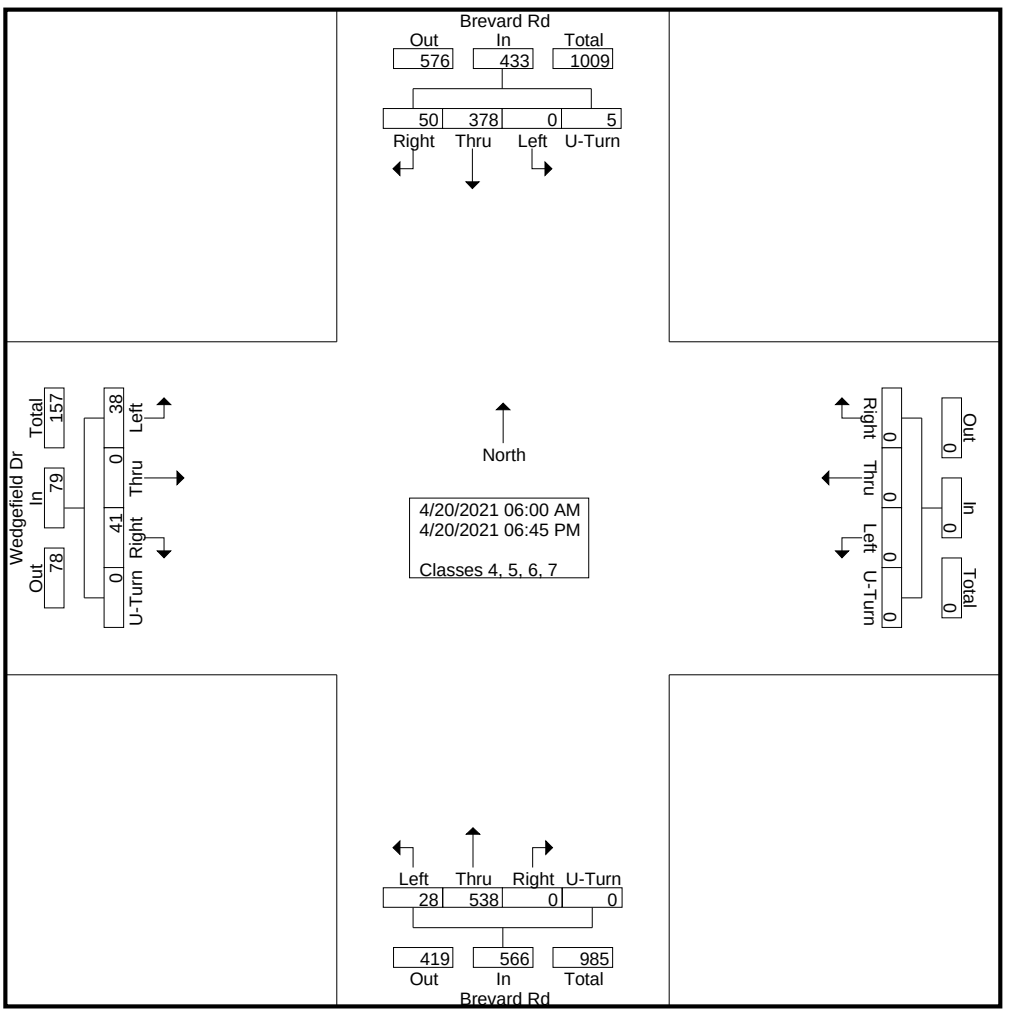

DocuSign Envelope ID: 5C03745C-4B01-4834-A65D-B77F558A4F46

Quality Counts

920 Blairhill Rd, Ste B-106
Charlotte, NC 28217

File Name : 15411704 - Brevard Rd -- Wedgefield Dr
Site Code : 15411704
Start Date : 4/20/2021
Page No : 3

	Brevard Rd Southbound					Westbound					Brevard Rd Northbound					Wedgefield Dr Eastbound					
Start Time	Left	Thru	Right	U-Turn	App. Total	Left	Thru	Right	U-Turn	App. Total	Left	Thru	Right	U-Turn	App. Total	Left	Thru	Right	U-Turn	App. Total	Int. Total
Peak Hour Analysis From 06:00 AM to 11:45 AM - Peak 1 of 1																					
Peak Hour for Entire Intersection Begins at 09:30 AM																					
09:30 AM	0	11	1	0	12	0	0	0	0	0	**2**	**17**	0	0	**19**	2	0	**2**	0	**4**	**35**
09:45 AM	0	**14**	0	0	14	0	0	0	0	0	2	11	0	0	13	1	0	1	0	2	29
10:00 AM	0	6	**2**	**1**	9	0	0	0	0	0	0	15	0	0	15	1	0	2	0	3	27
10:15 AM	0	14	1	0	**15**	0	0	0	0	0	1	15	0	0	16	**3**	0	1	0	4	35
Total Volume	0	45	4	1	50	0	0	0	0	0	5	58	0	0	63	7	0	6	0	13	126
% App. Total	0	90	8	2		0	0	0	0		7.9	92.1	0	0		53.8	0	46.2	0		
PHF	.000	.804	.500	.250	.833	.000	.000	.000	.000	.000	.625	.853	.000	.000	.829	.583	.000	.750	.000	.813	.900

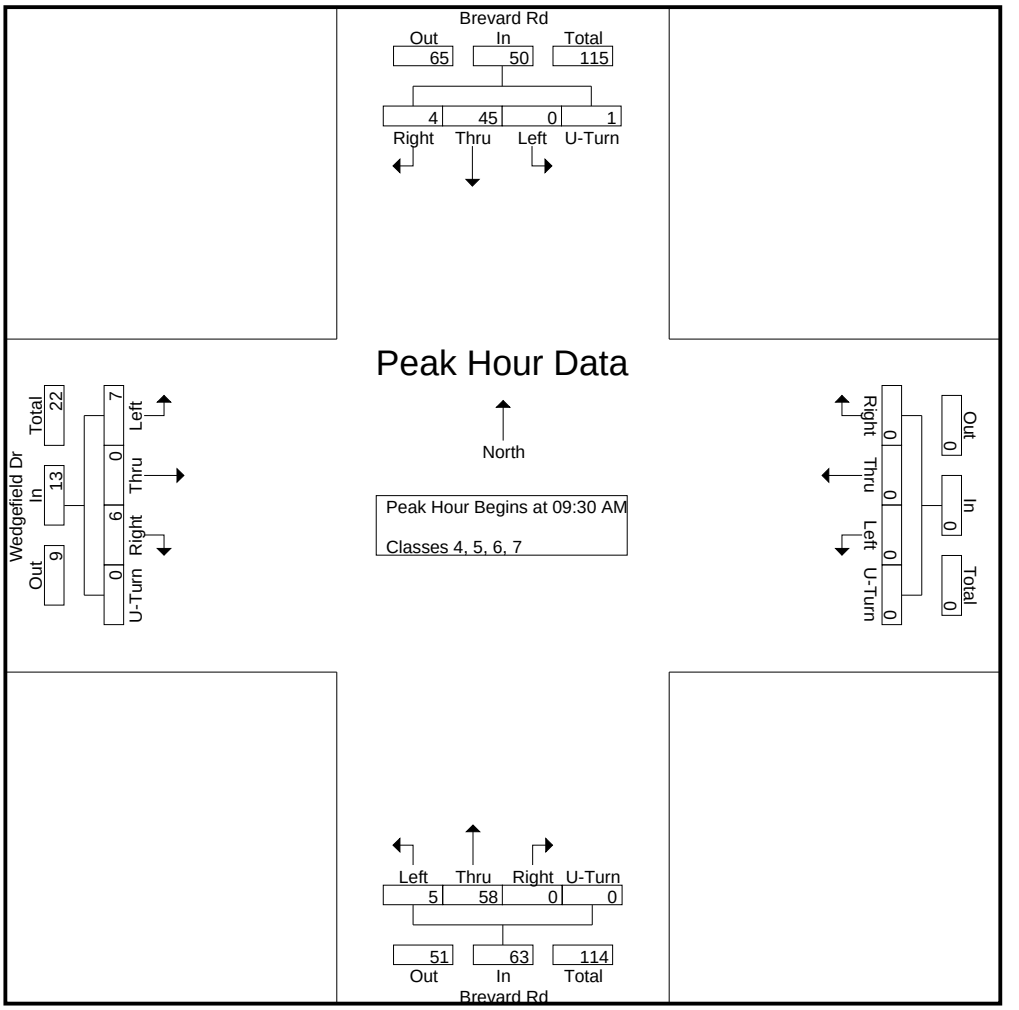

DocuSign Envelope ID: 5C03745C-4B01-4834-A65D-B77F558A4F46

Quality Counts

920 Blairhill Rd, Ste B-106
Charlotte, NC 28217

File Name : 15411704 - Brevard Rd -- Wedgefield Dr
Site Code : 15411704
Start Date : 4/20/2021

	Brevard Rd Southbound					Westbound					Brevard Rd Northbound					Wedgefield Dr Eastbound					
Start Time	Left	Thru	Right	U-Turn	App. Total	Left	Thru	Right	U-Turn	App. Total	Left	Thru	Right	U-Turn	App. Total	Left	Thru	Right	U-Turn	App. Total	Int. Total
Peak Hour Analysis From 12:00 PM to 06:45 PM - Peak 1 of 1																					
Peak Hour for Entire Intersection Begins at 03:15 PM																					
03:15 PM	0	**12**	**4**	0	**16**	0	0	0	0	0	1	11	0	0	12	0	0	1	0	1	**29**
03:30 PM	0	7	3	0	10	0	0	0	0	0	0	**14**	0	0	**14**	**1**	0	1	0	2	26
03:45 PM	0	12	2	0	14	0	0	0	0	0	**3**	7	0	0	10	1	0	**4**	0	**5**	29
04:00 PM	0	12	0	0	12	0	0	0	0	0	0	12	0	0	12	1	0	2	0	3	27
Total Volume	0	43	9	0	52	0	0	0	0	0	4	44	0	0	48	3	0	8	0	11	111
% App. Total	0	82.7	17.3	0		0	0	0	0		8.3	91.7	0	0		27.3	0	72.7	0		
PHF	.000	.896	.563	.000	.813	.000	.000	.000	.000	.000	.333	.786	.000	.000	.857	.750	.000	.500	.000	.550	.957

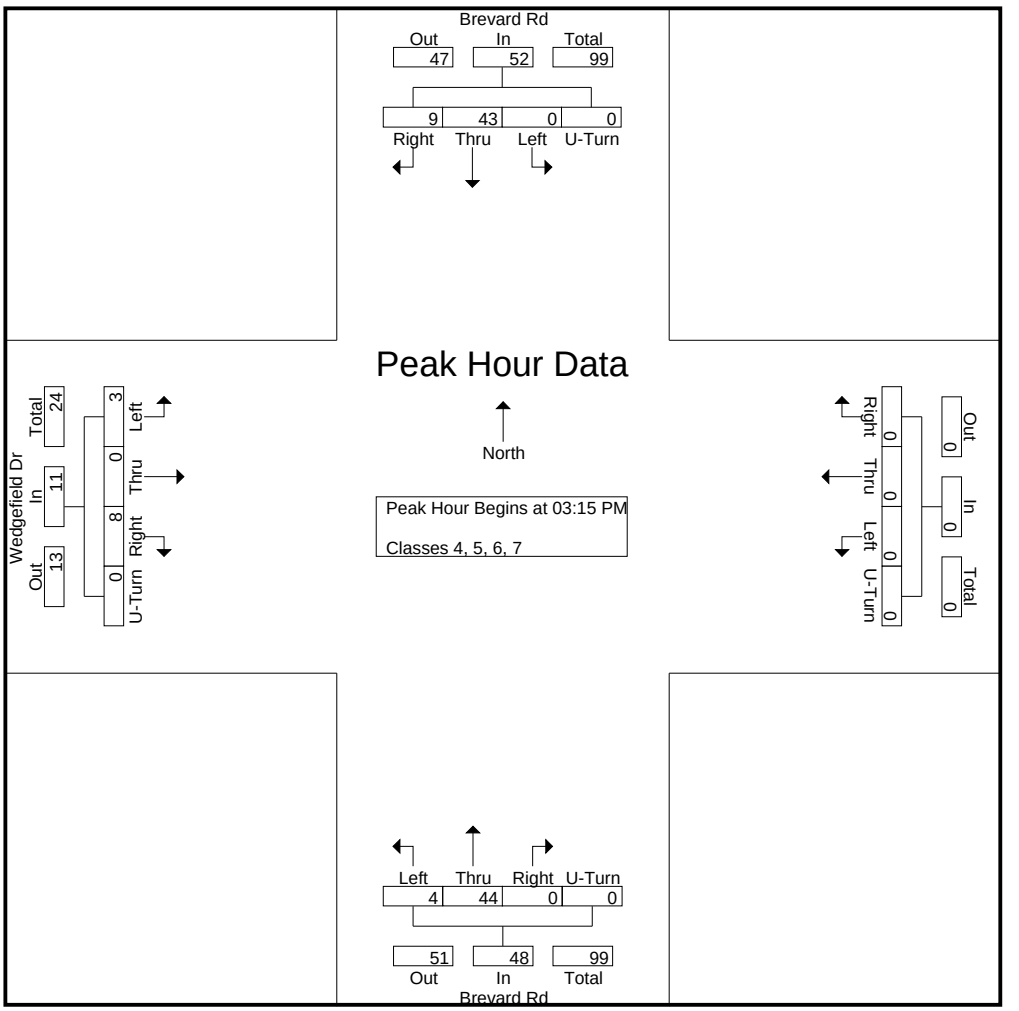

DocuSign Envelope ID: 5C03745C-4B01-4834-A65D-B77F558A4F46

Quality Counts

920 Blairhill Rd, Ste B-106
Charlotte, NC 28217

File Name : 15411704 - Brevard Rd -- Wedgefield Dr
Site Code : 15411704
Start Date : 4/20/2021
Page No : 1

Groups Printed- Classes 8, 9, 10

	Brevard Rd Southbound					Westbound					Brevard Rd Northbound					Wedgefield Dr Eastbound					
Start Time	Left	Thru	Right	U-Turn	App. Total	Left	Thru	Right	U-Turn	App. Total	Left	Thru	Right	U-Turn	App. Total	Left	Thru	Right	U-Turn	App. Total	Int. Total
06:00 AM	0	0	0	0	0	0	0	0	0	0	0	2	0	0	2	0	0	0	0	0	2
06:15 AM	0	2	0	0	2	0	0	0	0	0	0	0	0	0	0	0	0	0	0	0	2
06:30 AM	0	2	2	0	4	0	0	0	0	0	0	0	0	0	0	0	0	0	0	0	4
06:45 AM	0	2	1	0	3	0	0	0	0	0	0	3	0	0	3	0	0	0	0	0	6
Total	0	6	3	0	9	0	0	0	0	0	0	5	0	0	5	0	0	0	0	0	14
07:00 AM	0	3	0	0	3	0	0	0	0	0	0	4	0	0	4	1	0	0	0	1	8
07:15 AM	0	3	0	0	3	0	0	0	0	0	0	0	0	0	0	0	0	1	0	1	4
07:30 AM	0	3	0	0	3	0	0	0	0	0	0	5	0	0	5	0	0	0	0	0	8
07:45 AM	0	5	0	0	5	0	0	0	0	0	0	6	0	0	6	0	0	0	0	0	11
Total	0	14	0	0	14	0	0	0	0	0	0	15	0	0	15	1	0	1	0	2	31
08:00 AM	0	1	0	0	1	0	0	0	0	0	0	5	0	0	5	0	0	0	0	0	6
08:15 AM	0	6	0	0	6	0	0	0	0	0	0	8	0	0	8	0	0	0	0	0	14
08:30 AM	0	5	0	0	5	0	0	0	0	0	0	3	0	0	3	0	0	0	0	0	8
08:45 AM	0	5	0	0	5	0	0	0	0	0	0	1	0	0	1	0	0	0	0	0	6
Total	0	17	0	0	17	0	0	0	0	0	0	17	0	0	17	0	0	0	0	0	34
09:00 AM	0	7	0	0	7	0	0	0	0	0	0	0	0	0	0	0	0	0	0	0	7
09:15 AM	0	9	0	0	9	0	0	0	0	0	0	8	0	0	8	0	0	0	0	0	17
09:30 AM	0	6	1	0	7	0	0	0	0	0	1	7	0	0	8	0	0	0	0	0	15
09:45 AM	0	5	0	0	5	0	0	0	0	0	0	8	0	0	8	0	0	0	0	0	13
Total	0	27	1	0	28	0	0	0	0	0	1	23	0	0	24	0	0	0	0	0	52
10:00 AM	0	6	0	0	6	0	0	0	0	0	0	2	0	0	2	0	0	0	0	0	8
10:15 AM	0	5	0	0	5	0	0	0	0	0	0	2	0	0	2	0	0	0	0	0	7
10:30 AM	0	2	1	0	3	0	0	0	0	0	0	4	0	0	4	0	0	0	0	0	7
10:45 AM	0	7	0	0	7	0	0	0	0	0	0	3	0	0	3	1	0	0	0	1	11
Total	0	20	1	0	21	0	0	0	0	0	0	11	0	0	11	1	0	0	0	1	33
11:00 AM	0	2	0	0	2	0	0	0	0	0	0	1	0	0	1	0	0	0	0	0	3
11:15 AM	0	3	0	0	3	0	0	0	0	0	0	3	0	0	3	0	0	0	0	0	6
11:30 AM	0	3	1	0	4	0	0	0	0	0	0	4	0	0	4	0	0	0	0	0	8
11:45 AM	0	5	0	0	5	0	0	0	0	0	0	9	0	0	9	0	0	0	0	0	14
Total	0	13	1	0	14	0	0	0	0	0	0	17	0	0	17	0	0	0	0	0	31
12:00 PM	0	5	0	0	5	0	0	0	0	0	0	4	0	0	4	1	0	0	0	1	10
12:15 PM	0	5	0	0	5	0	0	0	0	0	0	6	0	0	6	0	0	0	0	0	11
12:30 PM	0	4	0	0	4	0	0	0	0	0	0	5	0	0	5	0	0	0	0	0	9
12:45 PM	0	7	0	0	7	0	0	0	0	0	0	3	0	0	3	0	0	0	0	0	10
Total	0	21	0	0	21	0	0	0	0	0	0	18	0	0	18	1	0	0	0	1	40
01:00 PM	0	12	0	0	12	0	0	0	0	0	0	5	0	0	5	0	0	0	0	0	17
01:15 PM	0	5	0	0	5	0	0	0	0	0	0	2	0	0	2	0	0	0	0	0	7
01:30 PM	0	4	0	0	4	0	0	0	0	0	0	7	0	0	7	0	0	0	0	0	11
01:45 PM	0	1	0	0	1	0	0	0	0	0	0	2	0	0	2	0	0	0	0	0	3
Total	0	22	0	0	22	0	0	0	0	0	0	16	0	0	16	0	0	0	0	0	38
02:00 PM	0	3	1	0	4	0	0	0	0	0	0	4	0	0	4	0	0	0	0	0	8
02:15 PM	0	3	1	0	4	0	0	0	0	0	0	4	0	0	4	0	0	0	0	0	8
02:30 PM	0	7	0	0	7	0	0	0	0	0	0	2	0	0	2	0	0	1	0	1	10
02:45 PM	0	3	1	0	4	0	0	0	0	0	0	3	0	0	3	0	0	0	0	0	7
Total	0	16	3	0	19	0	0	0	0	0	0	13	0	0	13	0	0	1	0	1	33
03:00 PM	0	4	0	0	4	0	0	0	0	0	0	4	0	0	4	0	0	0	0	0	8
03:15 PM	0	4	0	0	4	0	0	0	0	0	1	1	0	0	2	0	0	0	0	0	6
03:30 PM	0	3	0	0	3	0	0	0	0	0	0	2	0	0	2	0	0	0	0	0	5

DocuSign Envelope ID: 5C03745C-4B01-4834-A65D-B77F558A4F46

Quality Counts

920 Blairhill Rd, Ste B-106
Charlotte, NC 28217

File Name : 15411704 - Brevard Rd -- Wedgefield Dr
Site Code : 15411704
Start Date : 4/20/2021
Page No : 2

Groups Printed- Classes 8, 9, 10

	Brevard Rd Southbound					Westbound					Brevard Rd Northbound					Wedgefield Dr Eastbound					
Start Time	Left	Thru	Right	U-Turn	App. Total	Left	Thru	Right	U-Turn	App. Total	Left	Thru	Right	U-Turn	App. Total	Left	Thru	Right	U-Turn	App. Total	Int. Total
03:45 PM	0	2	0	0	2	0	0	0	0	0	0	2	0	0	2	2	0	0	0	2	6
Total	0	13	0	0	13	0	0	0	0	0	1	9	0	0	10	2	0	0	0	2	25
04:00 PM	0	4	0	0	4	0	0	0	0	0	0	2	0	0	2	0	0	1	0	1	7
04:15 PM	0	3	0	0	3	0	0	0	0	0	0	3	0	0	3	0	0	0	0	0	6
04:30 PM	0	2	0	0	2	0	0	0	0	0	0	4	0	0	4	0	0	0	0	0	6
04:45 PM	0	3	0	0	3	0	0	0	0	0	0	3	0	0	3	0	0	0	0	0	6
Total	0	12	0	0	12	0	0	0	0	0	0	12	0	0	12	0	0	1	0	1	25
05:00 PM	0	2	0	0	2	0	0	0	0	0	0	0	0	0	0	0	0	0	0	0	2
05:15 PM	0	1	0	0	1	0	0	0	0	0	0	2	0	0	2	0	0	0	0	0	3
05:30 PM	0	1	0	0	1	0	0	0	0	0	0	3	0	0	3	0	0	0	0	0	4
05:45 PM	0	3	0	0	3	0	0	0	0	0	0	1	0	0	1	0	0	0	0	0	4
Total	0	7	0	0	7	0	0	0	0	0	0	6	0	0	6	0	0	0	0	0	13
06:00 PM	0	0	0	0	0	0	0	0	0	0	0	1	0	0	1	0	0	0	0	0	1
06:15 PM	0	2	0	0	2	0	0	0	0	0	0	1	0	0	1	0	0	0	0	0	3
06:30 PM	0	1	0	0	1	0	0	0	0	0	0	1	0	0	1	0	0	0	0	0	2
06:45 PM	0	1	0	0	1	0	0	0	0	0	0	2	0	0	2	0	0	0	0	0	3
Total	0	4	0	0	4	0	0	0	0	0	0	5	0	0	5	0	0	0	0	0	9
Grand Total	0	192	9	0	201	0	0	0	0	0	2	167	0	0	169	5	0	3	0	8	378
Apprch %	0	95.5	4.5	0		0	0	0	0		1.2	98.8	0	0		62.5	0	37.5	0		
Total %	0	50.8	2.4	0	53.2	0	0	0	0	0	0.5	44.2	0	0	44.7	1.3	0	0.8	0	2.1	

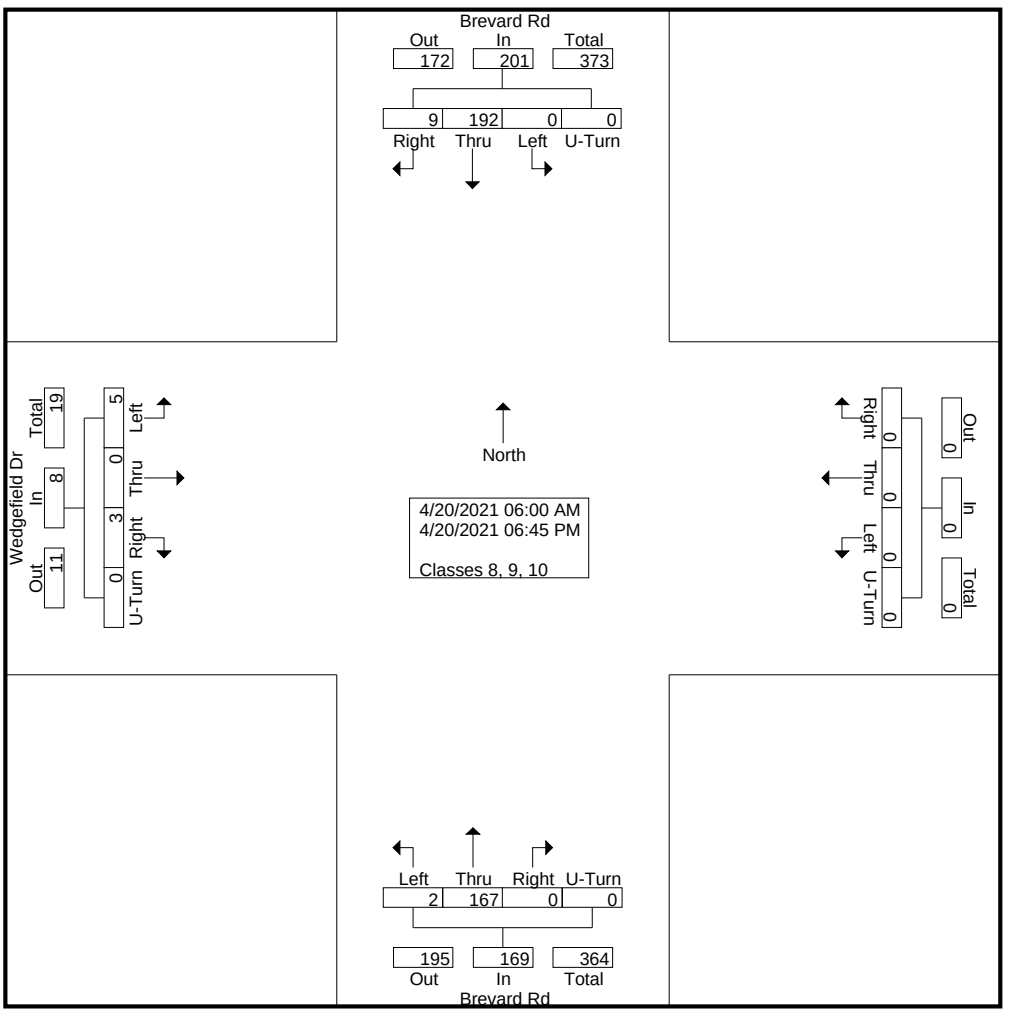

DocuSign Envelope ID: 5C03745C-4B01-4834-A65D-B77F558A4F46

Quality Counts

920 Blairhill Rd, Ste B-106
Charlotte, NC 28217

File Name : 15411704 - Brevard Rd -- Wedgefield Dr
Site Code : 15411704
Start Date : 4/20/2021
Page No : 3

	Brevard Rd Southbound					Westbound					Brevard Rd Northbound					Wedgefield Dr Eastbound					
Start Time	Left	Thru	Right	U-Turn	App. Total	Left	Thru	Right	U-Turn	App. Total	Left	Thru	Right	U-Turn	App. Total	Left	Thru	Right	U-Turn	App. Total	Int. Total
Peak Hour Analysis From 06:00 AM to 11:45 AM - Peak 1 of 1																					
Peak Hour for Entire Intersection Begins at 09:15 AM																					
09:15 AM	0	**9**	0	0	**9**	0	0	0	0	0	0	**8**	0	0	**8**	0	0	0	0	0	**17**
09:30 AM	0	6	**1**	0	7	0	0	0	0	0	**1**	7	0	0	8	0	0	0	0	0	15
09:45 AM	0	5	0	0	5	0	0	0	0	0	0	8	0	0	8	0	0	0	0	0	13
10:00 AM	0	6	0	0	6	0	0	0	0	0	0	2	0	0	2	0	0	0	0	0	8
Total Volume	0	26	1	0	27	0	0	0	0	0	1	25	0	0	26	0	0	0	0	0	53
% App. Total	0	96.3	3.7	0		0	0	0	0		3.8	96.2	0	0		0	0	0	0		
PHF	.000	.722	.250	.000	.750	.000	.000	.000	.000	.000	.250	.781	.000	.000	.813	.000	.000	.000	.000	.000	.779

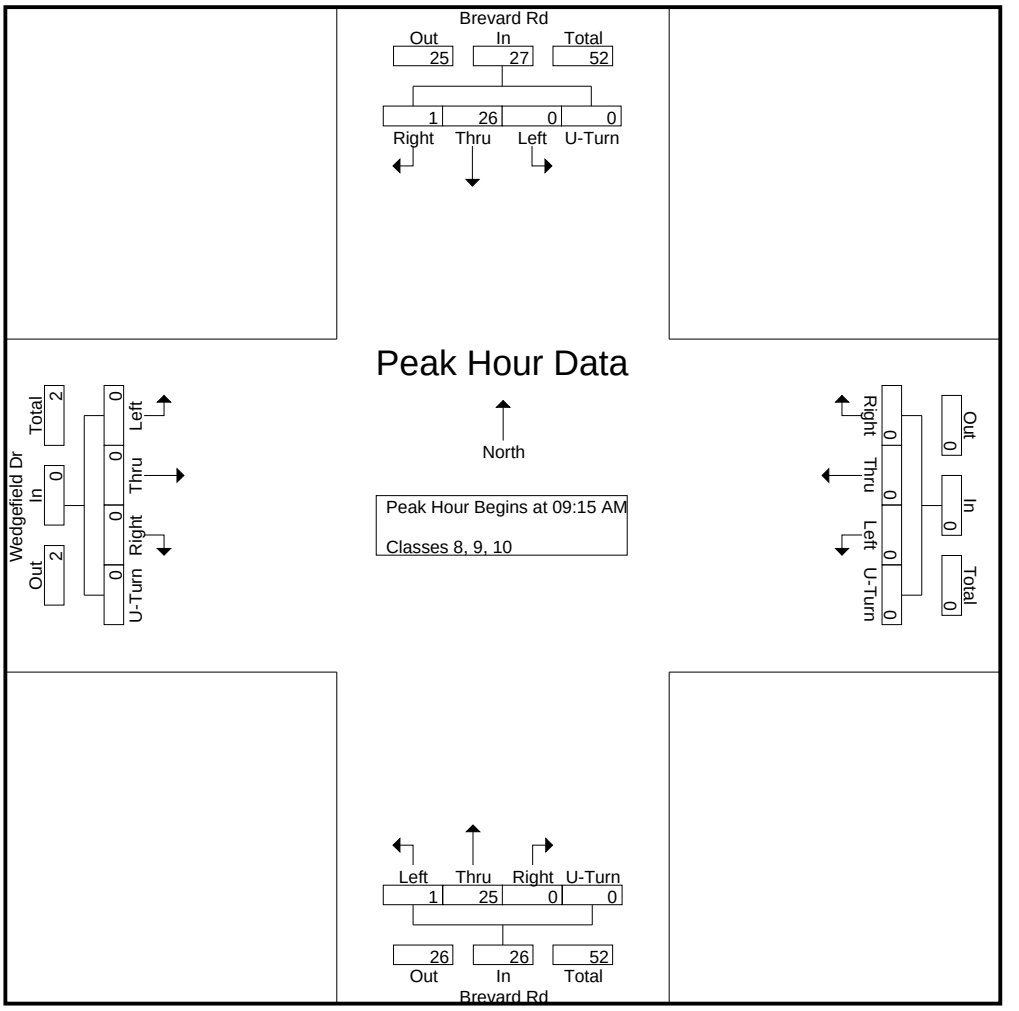

DocuSign Envelope ID: 5C03745C-4B01-4834-A65D-B77F558A4F46

Quality Counts

920 Blairhill Rd, Ste B-106
Charlotte, NC 28217

File Name : 15411704 - Brevard Rd -- Wedgefield Dr
Site Code : 15411704
Start Date : 4/20/2021
Page No : 4

	Brevard Rd Southbound					Westbound					Brevard Rd Northbound					Wedgefield Dr Eastbound					
Start Time	Left	Thru	Right	U-Turn	App. Total	Left	Thru	Right	U-Turn	App. Total	Left	Thru	Right	U-Turn	App. Total	Left	Thru	Right	U-Turn	App. Total	Int. Total
Peak Hour Analysis From 12:00 PM to 06:45 PM - Peak 1 of 1																					
Peak Hour for Entire Intersection Begins at 12:15 PM																					
12:15 PM	0	5	0	0	5	0	0	0	0	0	0	**6**	0	0	**6**	0	0	0	0	0	11
12:30 PM	0	4	0	0	4	0	0	0	0	0	0	5	0	0	5	0	0	0	0	0	9
12:45 PM	0	7	0	0	7	0	0	0	0	0	0	3	0	0	3	0	0	0	0	0	10
01:00 PM	0	**12**	0	0	**12**	0	0	0	0	0	0	5	0	0	5	0	0	0	0	0	**17**
Total Volume	0	28	0	0	28	0	0	0	0	0	0	19	0	0	19	0	0	0	0	0	47
% App. Total	0	100	0	0		0	0	0	0		0	100	0	0		0	0	0	0		
PHF	.000	.583	.000	.000	.583	.000	.000	.000	.000	.000	.000	.792	.000	.000	.792	.000	.000	.000	.000	.000	.691

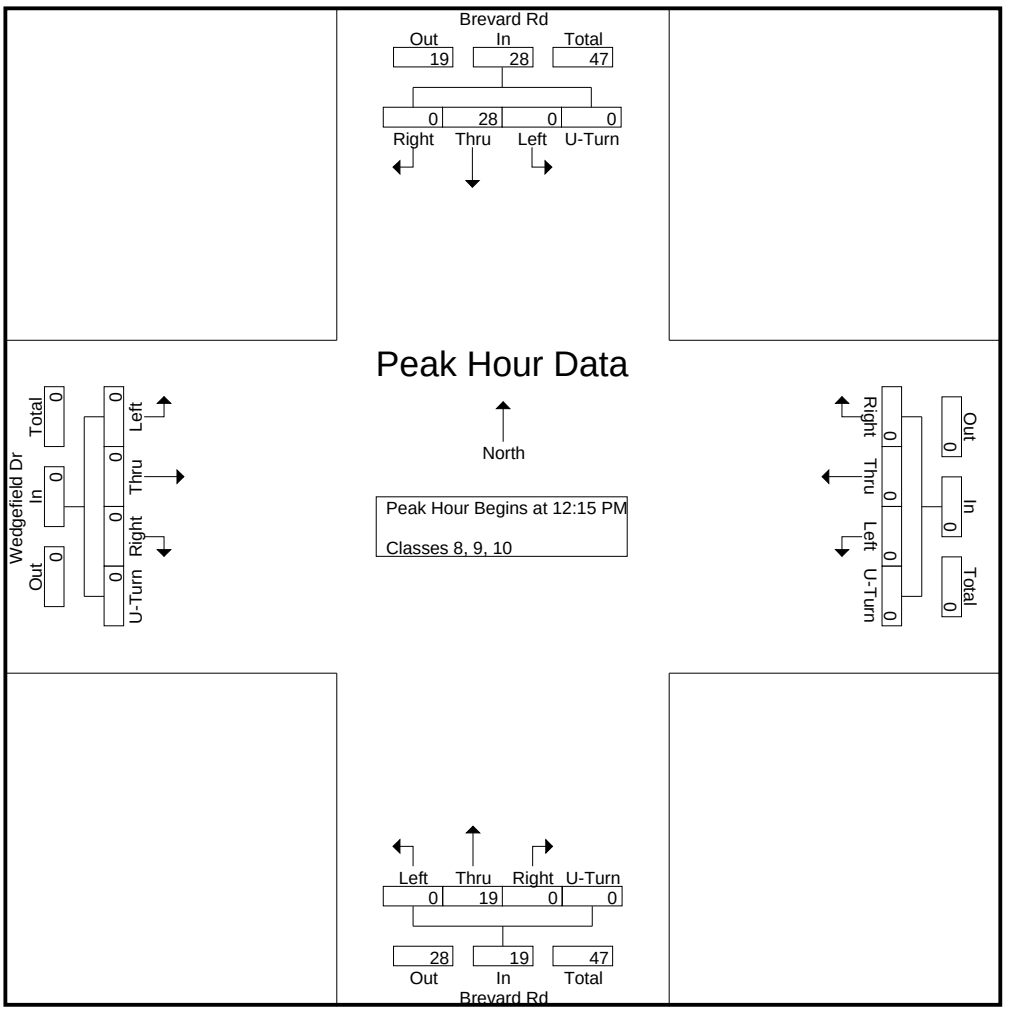

DocuSign Envelope ID: 5C03745C-4B01-4834-A65D-B77F558A4F46

Quality Counts

920 Blairhill Rd, Ste B-106
Charlotte, NC 28217

File Name : 15411704 - Brevard Rd -- Wedgefield Dr
Site Code : 15411704
Start Date : 4/20/2021
Page No : 1

Groups Printed- Classes 11, 12, 13

	Brevard Rd Southbound					Westbound					Brevard Rd Northbound					Wedgefield Dr Eastbound					
Start Time	Left	Thru	Right	U-Turn	App. Total	Left	Thru	Right	U-Turn	App. Total	Left	Thru	Right	U-Turn	App. Total	Left	Thru	Right	U-Turn	App. Total	Int. Total
06:00 AM	0	0	0	0	0	0	0	0	0	0	0	0	0	0	0	0	0	0	0	0	0
06:15 AM	0	0	0	0	0	0	0	0	0	0	0	0	0	0	0	0	0	0	0	0	0
06:30 AM	0	0	0	0	0	0	0	0	0	0	0	0	0	0	0	0	0	0	0	0	0
06:45 AM	0	0	0	0	0	0	0	0	0	0	0	0	0	0	0	0	0	0	0	0	0
Total	0	0	0	0	0	0	0	0	0	0	0	0	0	0	0	0	0	0	0	0	0
07:00 AM	0	0	0	0	0	0	0	0	0	0	0	0	0	0	0	0	0	0	0	0	0
07:15 AM	0	0	0	0	0	0	0	0	0	0	0	0	0	0	0	0	0	0	0	0	0
07:30 AM	0	0	0	0	0	0	0	0	0	0	0	0	0	0	0	0	0	0	0	0	0
07:45 AM	0	0	0	0	0	0	0	0	0	0	0	0	0	0	0	0	0	0	0	0	0
Total	0	0	0	0	0	0	0	0	0	0	0	0	0	0	0	0	0	0	0	0	0
08:00 AM	0	0	0	0	0	0	0	0	0	0	0	0	0	0	0	0	0	0	0	0	0
08:15 AM	0	0	0	0	0	0	0	0	0	0	0	0	0	0	0	0	0	0	0	0	0
08:30 AM	0	0	0	0	0	0	0	0	0	0	0	0	0	0	0	0	0	0	0	0	0
08:45 AM	0	0	0	0	0	0	0	0	0	0	0	0	0	0	0	0	0	0	0	0	0
Total	0	0	0	0	0	0	0	0	0	0	0	0	0	0	0	0	0	0	0	0	0
09:00 AM	0	0	0	0	0	0	0	0	0	0	0	0	0	0	0	0	0	0	0	0	0
09:15 AM	0	0	0	0	0	0	0	0	0	0	0	0	0	0	0	0	0	0	0	0	0
09:30 AM	0	0	0	0	0	0	0	0	0	0	0	0	0	0	0	0	0	0	0	0	0
09:45 AM	0	0	0	0	0	0	0	0	0	0	0	0	0	0	0	0	0	0	0	0	0
Total	0	0	0	0	0	0	0	0	0	0	0	0	0	0	0	0	0	0	0	0	0
10:00 AM	0	0	0	0	0	0	0	0	0	0	0	0	0	0	0	0	0	0	0	0	0
10:15 AM	0	0	0	0	0	0	0	0	0	0	0	0	0	0	0	0	0	0	0	0	0
10:30 AM	0	0	0	0	0	0	0	0	0	0	0	0	0	0	0	0	0	0	0	0	0
10:45 AM	0	0	0	0	0	0	0	0	0	0	0	0	0	0	0	0	0	0	0	0	0
Total	0	0	0	0	0	0	0	0	0	0	0	0	0	0	0	0	0	0	0	0	0
11:00 AM	0	0	0	0	0	0	0	0	0	0	0	0	0	0	0	0	0	0	0	0	0
11:15 AM	0	0	0	0	0	0	0	0	0	0	0	0	0	0	0	0	0	0	0	0	0
11:30 AM	0	0	0	0	0	0	0	0	0	0	0	0	0	0	0	0	0	0	0	0	0
11:45 AM	0	0	0	0	0	0	0	0	0	0	0	0	0	0	0	0	0	0	0	0	0
Total	0	0	0	0	0	0	0	0	0	0	0	0	0	0	0	0	0	0	0	0	0
12:00 PM	0	0	0	0	0	0	0	0	0	0	0	0	0	0	0	0	0	0	0	0	0
12:15 PM	0	0	0	0	0	0	0	0	0	0	0	0	0	0	0	0	0	0	0	0	0
12:30 PM	0	0	0	0	0	0	0	0	0	0	0	0	0	0	0	0	0	0	0	0	0
12:45 PM	0	0	0	0	0	0	0	0	0	0	0	0	0	0	0	0	0	0	0	0	0
Total	0	0	0	0	0	0	0	0	0	0	0	0	0	0	0	0	0	0	0	0	0
01:00 PM	0	0	0	0	0	0	0	0	0	0	0	0	0	0	0	0	0	0	0	0	0
01:15 PM	0	0	0	0	0	0	0	0	0	0	0	0	0	0	0	0	0	0	0	0	0
01:30 PM	0	0	0	0	0	0	0	0	0	0	0	0	0	0	0	0	0	0	0	0	0
01:45 PM	0	0	0	0	0	0	0	0	0	0	0	0	0	0	0	0	0	0	0	0	0
Total	0	0	0	0	0	0	0	0	0	0	0	0	0	0	0	0	0	0	0	0	0
02:00 PM	0	0	0	0	0	0	0	0	0	0	0	0	0	0	0	0	0	0	0	0	0
02:15 PM	0	0	0	0	0	0	0	0	0	0	0	0	0	0	0	0	0	0	0	0	0
02:30 PM	0	0	0	0	0	0	0	0	0	0	0	0	0	0	0	0	0	0	0	0	0
02:45 PM	0	0	0	0	0	0	0	0	0	0	0	0	0	0	0	0	0	0	0	0	0
Total	0	0	0	0	0	0	0	0	0	0	0	0	0	0	0	0	0	0	0	0	0
03:00 PM	0	0	0	0	0	0	0	0	0	0	0	0	0	0	0	0	0	0	0	0	0
03:15 PM	0	0	0	0	0	0	0	0	0	0	0	0	0	0	0	0	0	0	0	0	0
03:30 PM	0	0	0	0	0	0	0	0	0	0	0	0	0	0	0	0	0	0	0	0	0

DocuSign Envelope ID: 5C03745C-4B01-4834-A65D-B77F558A4F46

Quality Counts

920 Blairhill Rd, Ste B-106
Charlotte, NC 28217

File Name : 15411704 - Brevard Rd -- Wedgefield Dr
Site Code : 15411704
Start Date : 4/20/2021
Page No : 2

Groups Printed- Classes 11, 12, 13

	Brevard Rd Southbound					Westbound					Brevard Rd Northbound					Wedgefield Dr Eastbound					
Start Time	Left	Thru	Right	U-Turn	App. Total	Left	Thru	Right	U-Turn	App. Total	Left	Thru	Right	U-Turn	App. Total	Left	Thru	Right	U-Turn	App. Total	Int. Total
03:45 PM	0	0	0	0	0	0	0	0	0	0	0	0	0	0	0	0	0	0	0	0	0
Total	0	0	0	0	0	0	0	0	0	0	0	0	0	0	0	0	0	0	0	0	0
04:00 PM	0	0	0	0	0	0	0	0	0	0	0	0	0	0	0	0	0	0	0	0	0
04:15 PM	0	0	0	0	0	0	0	0	0	0	0	0	0	0	0	0	0	0	0	0	0
04:30 PM	0	0	0	0	0	0	0	0	0	0	0	0	0	0	0	0	0	0	0	0	0
04:45 PM	0	0	0	0	0	0	0	0	0	0	0	0	0	0	0	0	0	0	0	0	0
Total	0	0	0	0	0	0	0	0	0	0	0	0	0	0	0	0	0	0	0	0	0
05:00 PM	0	0	0	0	0	0	0	0	0	0	0	0	0	0	0	0	0	0	0	0	0
05:15 PM	0	0	0	0	0	0	0	0	0	0	0	0	0	0	0	0	0	0	0	0	0
05:30 PM	0	0	0	0	0	0	0	0	0	0	0	0	0	0	0	0	0	0	0	0	0
05:45 PM	0	0	0	0	0	0	0	0	0	0	0	0	0	0	0	0	0	0	0	0	0
Total	0	0	0	0	0	0	0	0	0	0	0	0	0	0	0	0	0	0	0	0	0
06:00 PM	0	0	0	0	0	0	0	0	0	0	0	0	0	0	0	0	0	0	0	0	0
06:15 PM	0	0	0	0	0	0	0	0	0	0	0	0	0	0	0	0	0	0	0	0	0
06:30 PM	0	0	0	0	0	0	0	0	0	0	0	0	0	0	0	0	0	0	0	0	0
06:45 PM	0	0	0	0	0	0	0	0	0	0	0	0	0	0	0	0	0	0	0	0	0
Total	0	0	0	0	0	0	0	0	0	0	0	0	0	0	0	0	0	0	0	0	0
Grand Total	0	0	0	0	0	0	0	0	0	0	0	0	0	0	0	0	0	0	0	0	0
Apprch %	0	0	0	0		0	0	0	0		0	0	0	0		0	0	0	0		
Total %																					

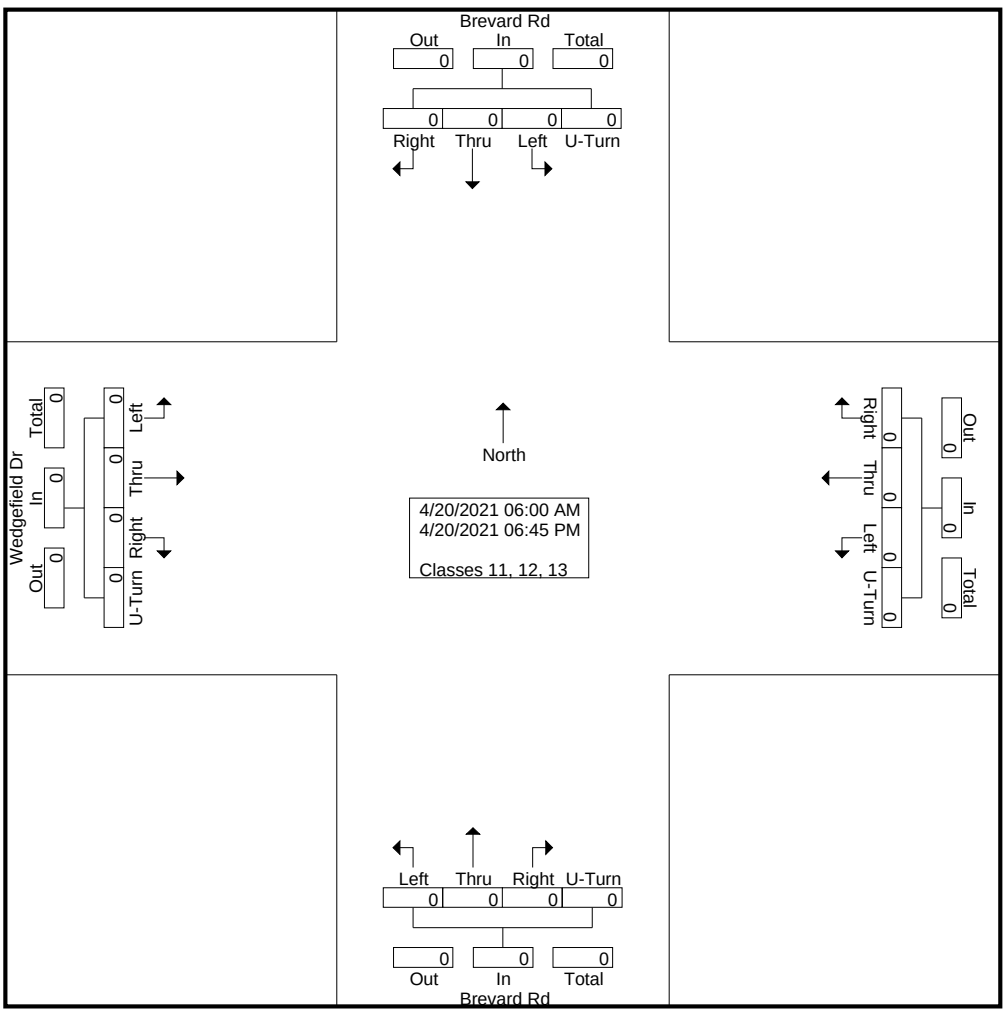

DocuSign Envelope ID: 5C03745C-4B01-4834-A65D-B77F558A4F46

Quality Counts

920 Blairhill Rd, Ste B-106
Charlotte, NC 28217

File Name : 15411704 - Brevard Rd -- Wedgefield Dr
Site Code : 15411704
Start Date : 4/20/2021
Page No : 3

	Brevard Rd Southbound					Westbound					Brevard Rd Northbound					Wedgefield Dr Eastbound					
Start Time	Left	Thru	Right	U-Turn	App. Total	Left	Thru	Right	U-Turn	App. Total	Left	Thru	Right	U-Turn	App. Total	Left	Thru	Right	U-Turn	App. Total	Int. Total
Peak Hour Analysis From 06:00 AM to 11:45 AM - Peak 1 of 1																					
Peak Hour for Entire Intersection Begins at 06:00 AM																					
06:00 AM	0	0	0	0	0	0	0	0	0	0	0	0	0	0	0	0	0	0	0	0	0
06:15 AM	0	0	0	0	0	0	0	0	0	0	0	0	0	0	0	0	0	0	0	0	0
06:30 AM	0	0	0	0	0	0	0	0	0	0	0	0	0	0	0	0	0	0	0	0	0
06:45 AM	0	0	0	0	0	0	0	0	0	0	0	0	0	0	0	0	0	0	0	0	0
Total Volume	0	0	0	0	0	0	0	0	0	0	0	0	0	0	0	0	0	0	0	0	0
% App. Total	0	0	0	0		0	0	0	0		0	0	0	0		0	0	0	0		
PHF	.000	.000	.000	.000	.000	.000	.000	.000	.000	.000	.000	.000	.000	.000	.000	.000	.000	.000	.000	.000	.000

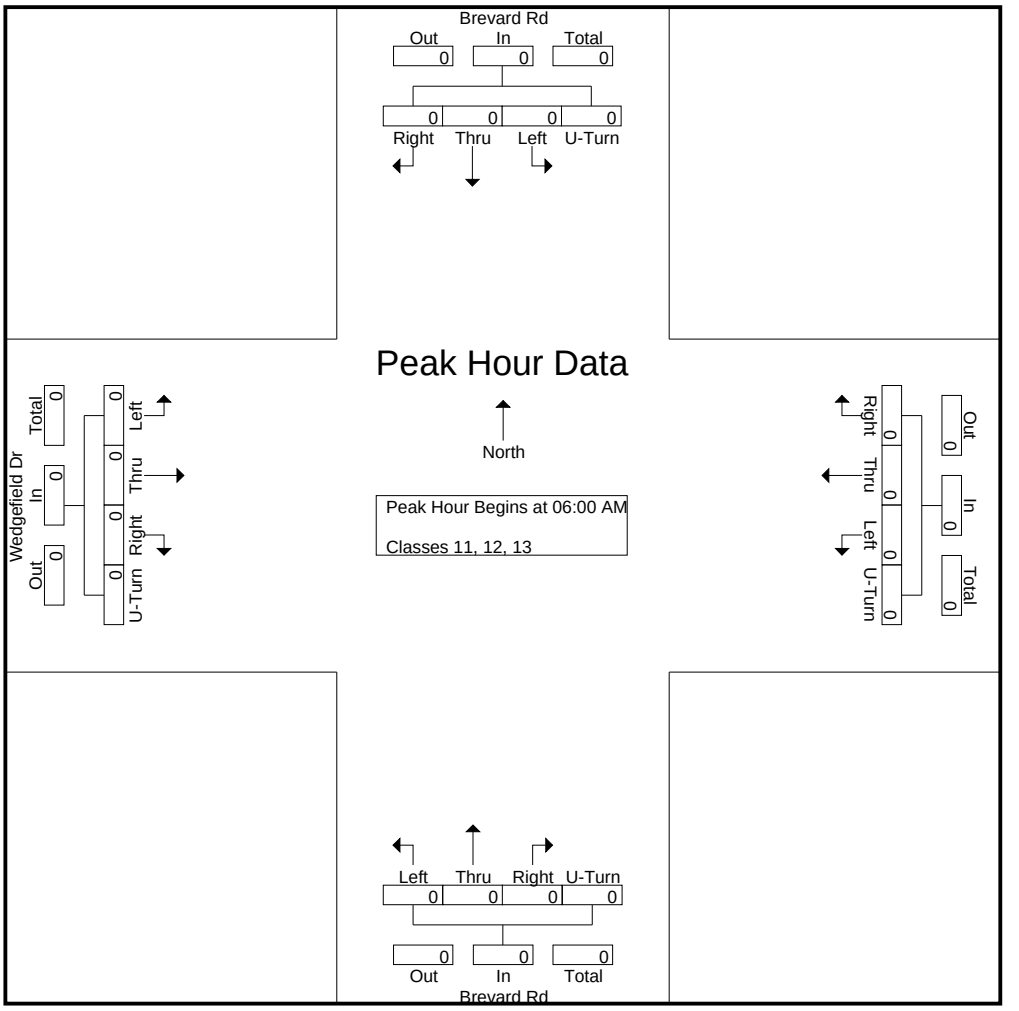

DocuSign Envelope ID: 5C03745C-4B01-4834-A65D-B77F558A4F46

Quality Counts

920 Blairhill Rd, Ste B-106
Charlotte, NC 28217

File Name : 15411704 - Brevard Rd -- Wedgefield Dr
Site Code : 15411704
Start Date : 4/20/2021
Page No : 4

	Brevard Rd Southbound					Westbound					Brevard Rd Northbound					Wedgefield Dr Eastbound					
Start Time	Left	Thru	Right	U-Turn	App. Total	Left	Thru	Right	U-Turn	App. Total	Left	Thru	Right	U-Turn	App. Total	Left	Thru	Right	U-Turn	App. Total	Int. Total
Peak Hour Analysis From 12:00 PM to 06:45 PM - Peak 1 of 1																					
Peak Hour for Entire Intersection Begins at 12:00 PM																					
12:00 PM	0	0	0	0	0	0	0	0	0	0	0	0	0	0	0	0	0	0	0	0	0
12:15 PM	0	0	0	0	0	0	0	0	0	0	0	0	0	0	0	0	0	0	0	0	0
12:30 PM	0	0	0	0	0	0	0	0	0	0	0	0	0	0	0	0	0	0	0	0	0
12:45 PM	0	0	0	0	0	0	0	0	0	0	0	0	0	0	0	0	0	0	0	0	0
Total Volume	0	0	0	0	0	0	0	0	0	0	0	0	0	0	0	0	0	0	0	0	0
% App. Total	0	0	0	0		0	0	0	0		0	0	0	0		0	0	0	0		
PHF	.000	.000	.000	.000	.000	.000	.000	.000	.000	.000	.000	.000	.000	.000	.000	.000	.000	.000	.000	.000	.000

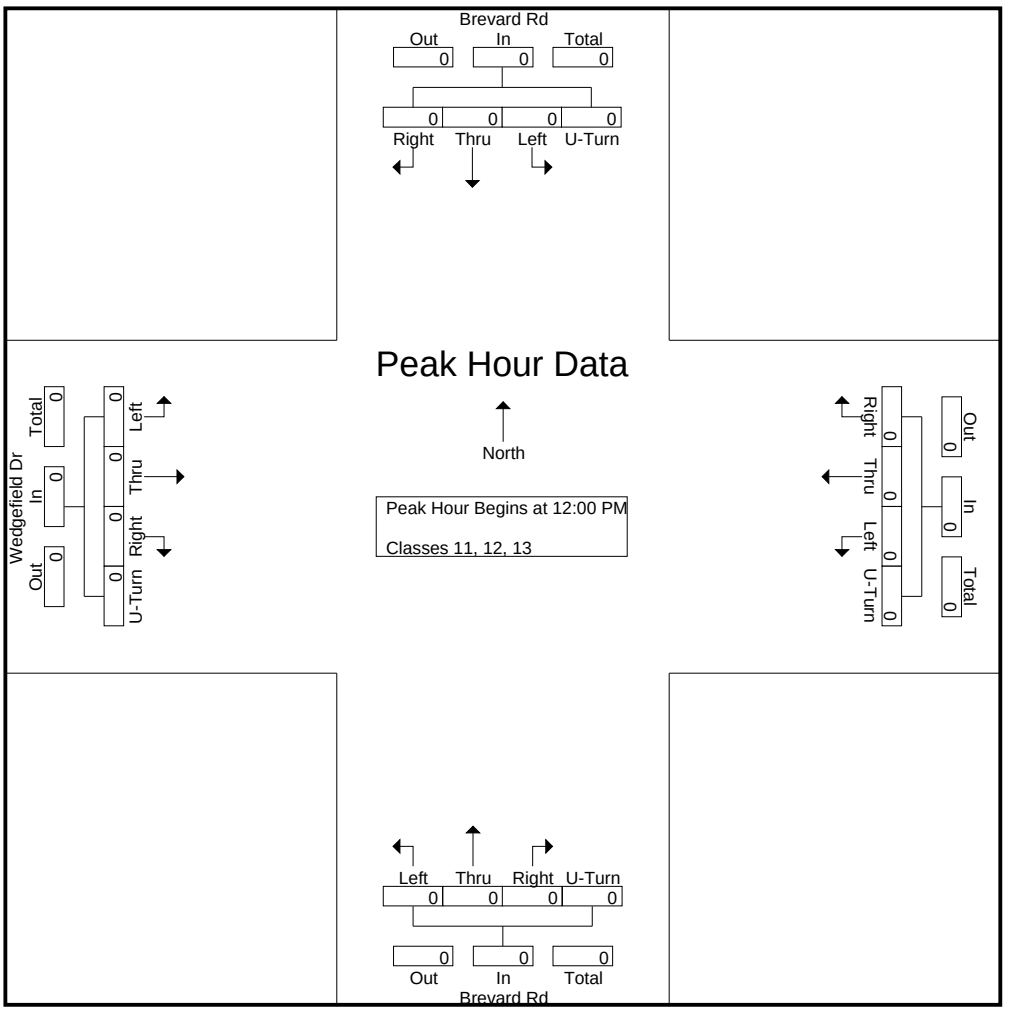

DocuSign Envelope ID: 5C03745C-4B01-4834-A65D-B77F558A4F46

Quality Counts

920 Blairhill Rd, Ste B-106
Charlotte, NC 28217

File Name : 15411704 - Brevard Rd -- Wedgefield Dr
Site Code : 15411704
Start Date : 4/20/2021
Page No : 1

Groups Printed- Bikes, Peds

	Brevard Rd Southbound					Westbound					Brevard Rd Northbound					Wedgefield Dr Eastbound					
Start Time	Left	Thru	Right	Peds	App. Total	Left	Thru	Right	Peds	App. Total	Left	Thru	Right	Peds	App. Total	Left	Thru	Right	Peds	App. Total	Int. Total
06:00 AM	0	0	0	0	0	0	0	0	0	0	0	0	0	0	0	0	0	0	0	0	0
06:15 AM	0	0	0	0	0	0	0	0	0	0	0	0	0	0	0	0	0	0	0	0	0
06:30 AM	0	0	0	0	0	0	0	0	0	0	0	0	0	0	0	0	0	0	0	0	0
06:45 AM	0	0	0	0	0	0	0	0	0	0	0	0	0	0	0	0	0	0	0	0	0
Total	0	0	0	0	0	0	0	0	0	0	0	0	0	0	0	0	0	0	0	0	0
07:00 AM	0	0	0	0	0	0	0	0	0	0	0	0	0	0	0	0	0	0	0	0	0
07:15 AM	0	0	0	0	0	0	0	0	0	0	0	0	0	0	0	0	0	0	0	0	0
07:30 AM	0	0	0	0	0	0	0	0	0	0	0	0	0	0	0	0	0	0	0	0	0
07:45 AM	0	0	0	0	0	0	0	0	0	0	0	0	0	0	0	0	0	0	0	0	0
Total	0	0	0	0	0	0	0	0	0	0	0	0	0	0	0	0	0	0	0	0	0
08:00 AM	0	0	0	0	0	0	0	0	0	0	0	0	0	0	0	0	0	0	0	0	0
08:15 AM	0	0	0	0	0	0	0	0	0	0	0	0	0	0	0	0	0	0	0	0	0
08:30 AM	0	0	0	0	0	0	0	0	0	0	0	0	0	1	1	0	0	0	1	1	2
08:45 AM	0	0	0	0	0	0	0	0	0	0	0	0	0	0	0	0	0	0	1	1	1
Total	0	0	0	0	0	0	0	0	0	0	0	0	0	1	1	0	0	0	2	2	3
09:00 AM	0	0	0	0	0	0	0	0	0	0	0	0	0	0	0	0	0	0	0	0	0
09:15 AM	0	0	0	0	0	0	0	0	0	0	0	0	0	0	0	0	0	0	0	0	0
09:30 AM	0	1	0	0	1	0	0	0	0	0	0	0	0	0	0	0	0	0	0	0	1
09:45 AM	0	0	0	0	0	0	0	0	0	0	0	0	0	0	0	0	0	0	2	2	2
Total	0	1	0	0	1	0	0	0	0	0	0	0	0	0	0	0	0	0	2	2	3
10:00 AM	0	0	0	0	0	0	0	0	0	0	0	0	0	0	0	0	0	0	1	1	1
10:15 AM	0	0	0	0	0	0	0	0	0	0	0	0	0	0	0	0	0	0	0	0	0
10:30 AM	0	0	0	0	0	0	0	0	0	0	0	0	0	0	0	0	0	0	0	0	0
10:45 AM	0	0	0	0	0	0	0	0	0	0	0	0	0	0	0	0	0	0	0	0	0
Total	0	0	0	0	0	0	0	0	0	0	0	0	0	0	0	0	0	0	1	1	1
11:00 AM	0	0	0	0	0	0	0	0	0	0	0	0	0	0	0	0	0	0	1	1	1
11:15 AM	0	0	0	0	0	0	0	0	1	1	0	0	0	1	1	0	0	0	1	1	3
11:30 AM	0	0	0	0	0	0	0	0	0	0	0	0	0	0	0	0	0	1	0	1	1
11:45 AM	0	0	0	0	0	0	0	0	0	0	0	0	0	0	0	0	0	0	0	0	0
Total	0	0	0	0	0	0	0	0	1	1	0	0	0	1	1	0	0	1	2	3	5
12:00 PM	0	0	0	0	0	0	0	0	0	0	0	0	0	0	0	0	0	0	2	2	2
12:15 PM	0	0	0	0	0	0	0	0	0	0	0	0	0	0	0	0	0	0	1	1	1
12:30 PM	0	0	0	0	0	0	0	0	0	0	0	0	0	0	0	0	0	0	0	0	0
12:45 PM	0	0	0	0	0	0	0	0	0	0	1	0	0	0	1	0	0	0	0	0	1
Total	0	0	0	0	0	0	0	0	0	0	1	0	0	0	1	0	0	0	3	3	4
01:00 PM	0	0	0	0	0	0	0	0	0	0	0	0	0	0	0	0	0	0	0	0	0
01:15 PM	0	0	0	0	0	0	0	0	0	0	0	0	0	0	0	0	0	0	0	0	0
01:30 PM	0	0	0	0	0	0	0	0	0	0	0	0	0	0	0	0	0	0	1	1	1
01:45 PM	0	0	0	0	0	0	0	0	0	0	0	0	0	0	0	0	0	0	1	1	1
Total	0	0	0	0	0	0	0	0	0	0	0	0	0	0	0	0	0	0	2	2	2
02:00 PM	0	0	0	0	0	0	0	0	0	0	0	0	0	0	0	0	0	0	0	0	0
02:15 PM	0	0	0	0	0	0	0	0	0	0	0	0	0	0	0	0	0	0	1	1	1
02:30 PM	0	0	0	0	0	0	0	0	1	1	0	0	0	0	0	0	0	0	0	0	1
02:45 PM	0	0	0	0	0	0	0	0	1	1	0	0	0	0	0	0	0	0	0	0	1
Total	0	0	0	0	0	0	0	0	2	2	0	0	0	0	0	0	0	0	1	1	3
03:00 PM	0	0	0	1	1	0	0	0	1	1	0	0	0	0	0	0	0	0	0	0	2
03:15 PM	0	0	0	0	0	0	0	0	0	0	0	0	0	0	0	0	0	0	0	0	0
03:30 PM	0	0	0	0	0	0	0	0	0	0	0	0	0	0	0	0	0	0	0	0	0

DocuSign Envelope ID: 5C03745C-4B01-4834-A65D-B77F558A4F46

Quality Counts

920 Blairhill Rd, Ste B-106
Charlotte, NC 28217

File Name : 15411704 - Brevard Rd -- Wedgefield Dr
Site Code : 15411704
Start Date : 4/20/2021

Groups Printed- Bikes, Peds

	Brevard Rd Southbound					Westbound					Brevard Rd Northbound					Wedgefield Dr Eastbound					
Start Time	Left	Thru	Right	Peds	App. Total	Left	Thru	Right	Peds	App. Total	Left	Thru	Right	Peds	App. Total	Left	Thru	Right	Peds	App. Total	Int. Total
03:45 PM	0	0	0	0	0	0	0	0	0	0	0	0	0	0	0	0	0	0	0	0	0
Total	0	0	0	1	1	0	0	0	1	1	0	0	0	0	0	0	0	0	0	0	2
04:00 PM	0	0	0	0	0	0	0	0	0	0	0	0	0	0	0	0	0	0	0	0	0
04:15 PM	0	0	0	0	0	0	0	0	0	0	0	1	0	0	1	0	0	0	0	0	1
04:30 PM	0	0	0	0	0	0	0	0	0	0	0	0	0	0	0	0	0	0	0	0	0
04:45 PM	0	0	0	0	0	0	0	0	0	0	0	0	0	0	0	0	0	0	1	1	1
Total	0	0	0	0	0	0	0	0	0	0	0	1	0	0	1	0	0	0	1	1	2
05:00 PM	0	0	0	0	0	0	0	0	0	0	0	0	0	0	0	0	0	0	0	0	0
05:15 PM	0	0	0	0	0	0	0	0	0	0	0	0	0	0	0	0	0	0	3	3	3
05:30 PM	0	0	0	0	0	0	0	0	0	0	0	1	0	0	1	0	0	0	0	0	1
05:45 PM	0	0	0	0	0	0	0	0	0	0	0	0	0	0	0	0	0	0	1	1	1
Total	0	0	0	0	0	0	0	0	0	0	0	1	0	0	1	0	0	0	4	4	5
06:00 PM	0	0	0	0	0	0	0	0	0	0	0	1	0	0	1	0	0	0	0	0	1
06:15 PM	0	0	0	0	0	0	0	0	0	0	0	0	0	0	0	0	0	0	0	0	0
06:30 PM	0	0	0	0	0	0	0	0	0	0	0	0	0	0	0	0	0	0	2	2	2
06:45 PM	0	0	0	0	0	0	0	0	0	0	0	0	0	0	0	0	0	0	1	1	1
Total	0	0	0	0	0	0	0	0	0	0	0	1	0	0	1	0	0	0	3	3	4
Grand Total	0	1	0	1	2	0	0	0	4	4	1	3	0	2	6	0	0	1	21	22	34
Apprch %	0	50	0	50		0	0	0	100		16.7	50	0	33.3		0	0	4.5	95.5		
Total %	0	2.9	0	2.9	5.9	0	0	0	11.8	11.8	2.9	8.8	0	5.9	17.6	0	0	2.9	61.8	64.7	

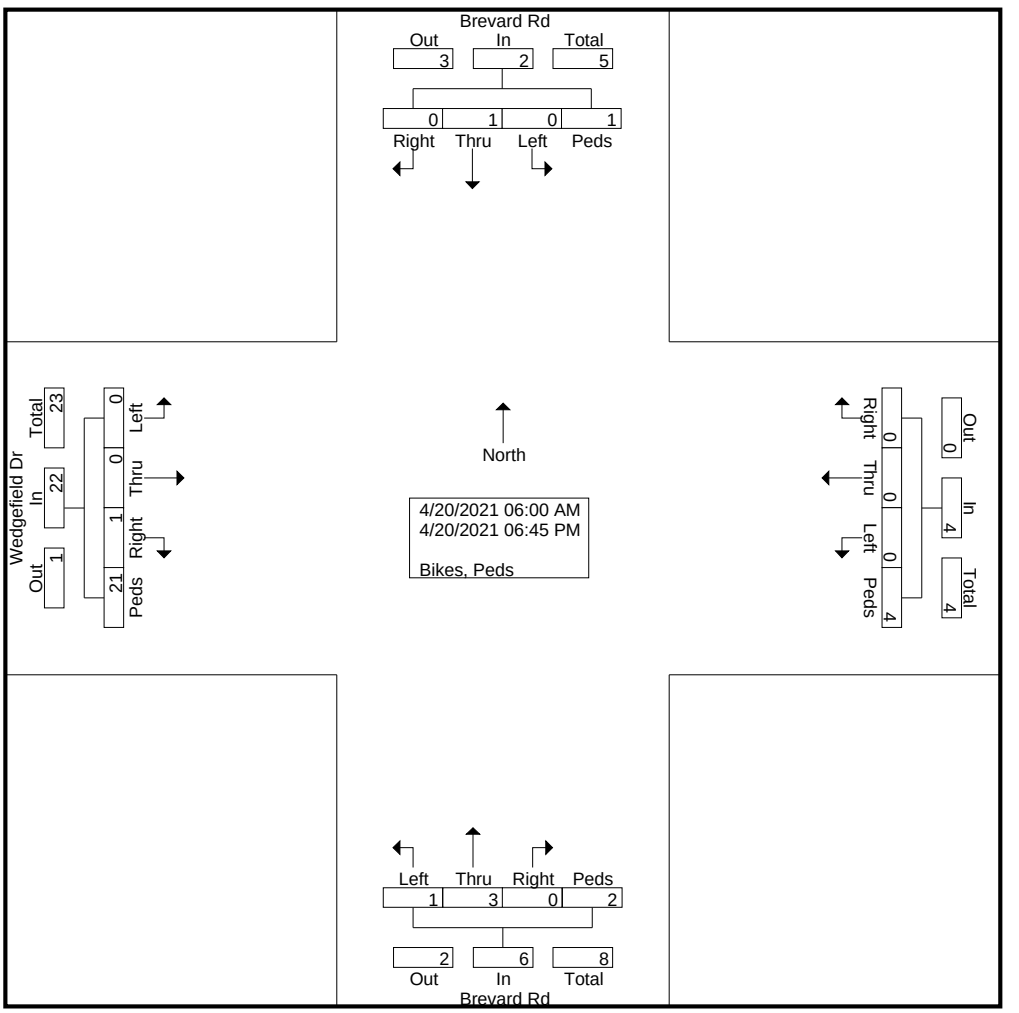

DocuSign Envelope ID: 5C03745C-4B01-4834-A65D-B77F558A4F46

Quality Counts

920 Blairhill Rd, Ste B-106
Charlotte, NC 28217

File Name : 15411704 - Brevard Rd -- Wedgefield Dr
Site Code : 15411704
Start Date : 4/20/2021

	Brevard Rd Southbound					Westbound					Brevard Rd Northbound					Wedgefield Dr Eastbound					
Start Time	Left	Thru	Right	Peds	App. Total	Left	Thru	Right	Peds	App. Total	Left	Thru	Right	Peds	App. Total	Left	Thru	Right	Peds	App. Total	Int. Total
Peak Hour Analysis From 06:00 AM to 11:45 AM - Peak 1 of 1																					
Peak Hour for Entire Intersection Begins at 10:45 AM																					
10:45 AM	0	0	0	0	0	0	0	0	0	0	0	0	0	0	0	0	0	0	0	0	0
11:00 AM	0	0	0	0	0	0	0	0	0	0	0	0	0	0	0	0	0	0	**1**	**1**	1
11:15 AM	0	0	0	0	0	0	0	0	**1**	**1**	0	0	0	**1**	**1**	0	0	0	1	1	**3**
11:30 AM	0	0	0	0	0	0	0	0	0	0	0	0	0	0	0	0	0	**1**	0	1	1
Total Volume	0	0	0	0	0	0	0	0	1	1	0	0	0	1	1	0	0	1	2	3	5
% App. Total	0	0	0	0		0	0	0	100		0	0	0	100		0	0	33.3	66.7		
PHF	.000	.000	.000	.000	.000	.000	.000	.000	.250	.250	.000	.000	.000	.250	.250	.000	.000	.250	.500	.750	.417

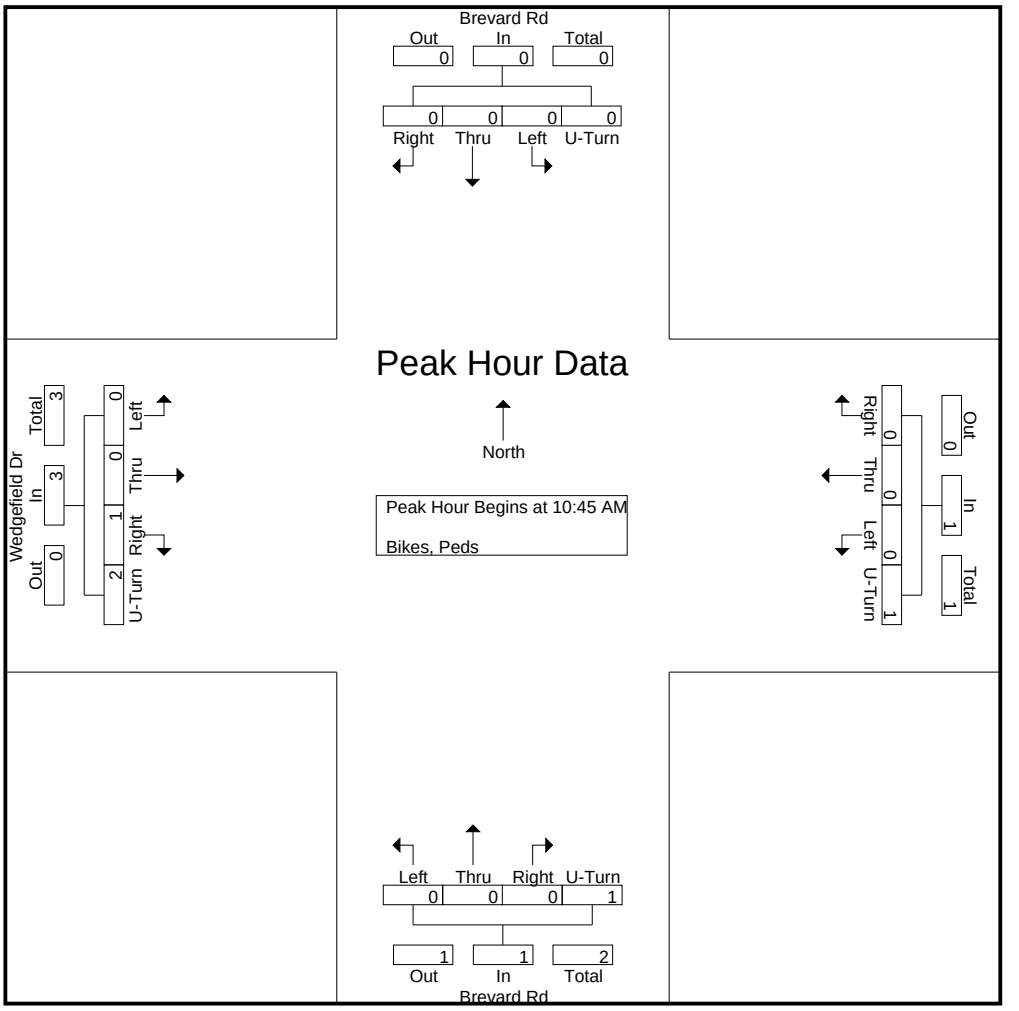

DocuSign Envelope ID: 5C03745C-4B01-4834-A65D-B77F558A4F46

Quality Counts

920 Blairhill Rd, Ste B-106
Charlotte, NC 28217

File Name : 15411704 - Brevard Rd -- Wedgefield Dr
Site Code : 15411704
Start Date : 4/20/2021

	Brevard Rd Southbound					Westbound					Brevard Rd Northbound					Wedgefield Dr Eastbound					
Start Time	Left	Thru	Right	Peds	App. Total	Left	Thru	Right	Peds	App. Total	Left	Thru	Right	Peds	App. Total	Left	Thru	Right	Peds	App. Total	Int. Total
Peak Hour Analysis From 12:00 PM to 06:45 PM - Peak 1 of 1																					
Peak Hour for Entire Intersection Begins at 05:15 PM																					
05:15 PM	0	0	0	0	0	0	0	0	0	0	0	0	0	0	0	0	0	0	**3**	**3**	**3**
05:30 PM	0	0	0	0	0	0	0	0	0	0	0	**1**	0	0	**1**	0	0	0	0	0	1
05:45 PM	0	0	0	0	0	0	0	0	0	0	0	0	0	0	0	0	0	0	1	1	1
06:00 PM	0	0	0	0	0	0	0	0	0	0	0	1	0	0	1	0	0	0	0	0	1
Total Volume	0	0	0	0	0	0	0	0	0	0	0	2	0	0	2	0	0	0	4	4	6
% App. Total	0	0	0	0		0	0	0	0		0	100	0	0		0	0	0	100		
PHF	.000	.000	.000	.000	.000	.000	.000	.000	.000	.000	.000	.500	.000	.000	.500	.000	.000	.000	.333	.333	.500

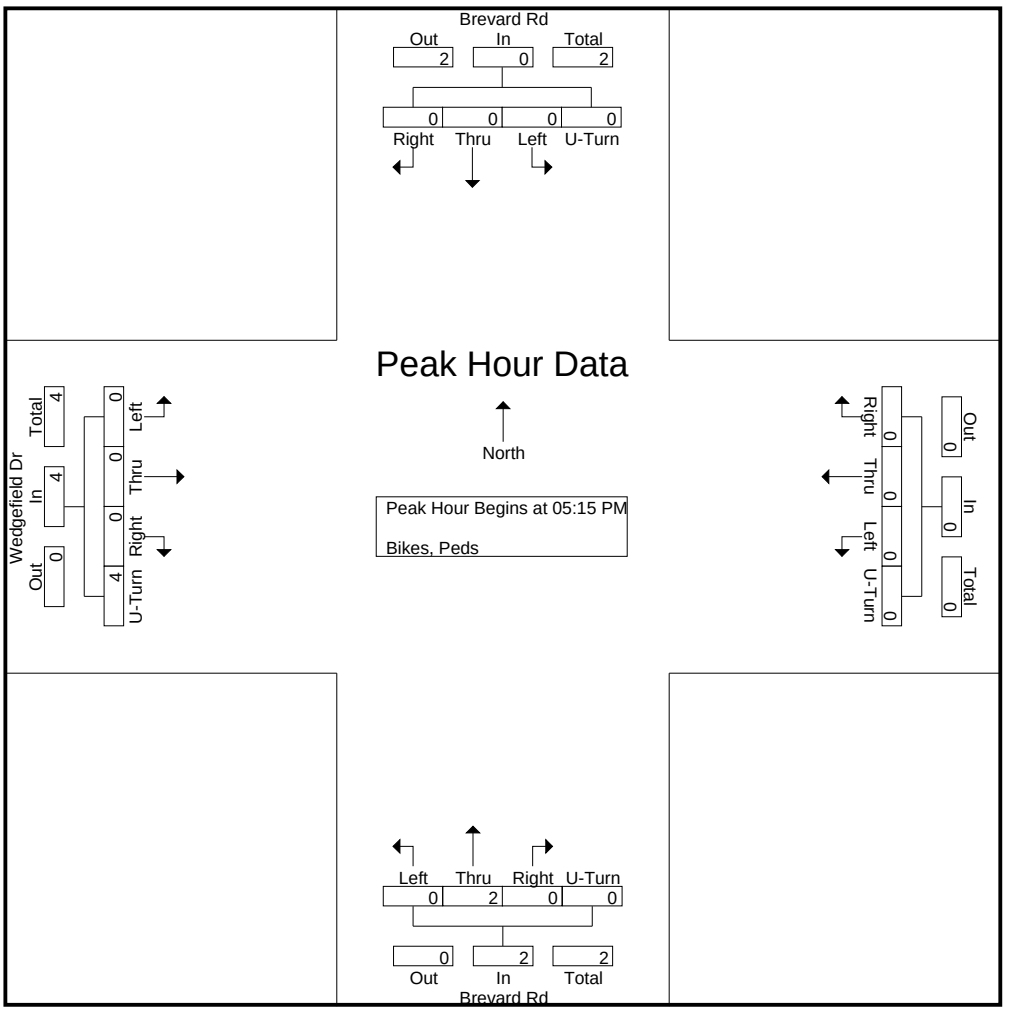

DocuSign Envelope ID: 5C03745C-4B01-4834-A65D-B77F558A4F46

QUALITY COUNTS LLC
920 Blairhill Rd, Suite 106, Charlotte, NC 28217
704.215.4616

Count Number: 15411705
County: Buncombe
City: Asheville
Division: 13

Location: Brevard Rd & Ingles/Outlet Mall Entrance
General Location Type: Intersection
Count Type: Turning Movement (Classification)
Count Start Date: 4/20/2021
Time: 6:00 AM – 7:00 PM
Volume: 27,390

Maximum Temperature: 69° F
Minimum Temperature: 40° F
Precipitation: 0.00 in
Snowfall: 0.0 in
Average Sky Cover: 0.2
Weather Conditions: Clear

1. **School in Session:** Yes
2. **Pedestrians Counted**: Yes
3. **Disabled Pedestrians Present**: No
   Description and Approaches Used: N/A
4. **Counted By**: Christian Buchli
5. **Data Processor**: Jon B
6. **Signal Inventory**: N/A
7. **Data Collection Method**: Video/Count Board
8. **Equipment Operating Properly**: Yes
9. **Area Lighting Present**: Yes
10. **Nearest Roadway Stop Sign < 300 ft:** No
    If yes, list approaches: N/A
11. **Nearest Traffic Signal < 300 ft:** No
    If yes, list approaches: N/A
12. **At-Grade Railroad Crossing Present (<200 ft):** No
    If yes, list approaches & distance: N/A
13. **Other:**

↑ North

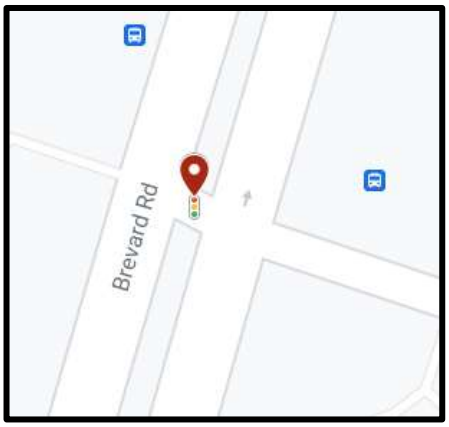

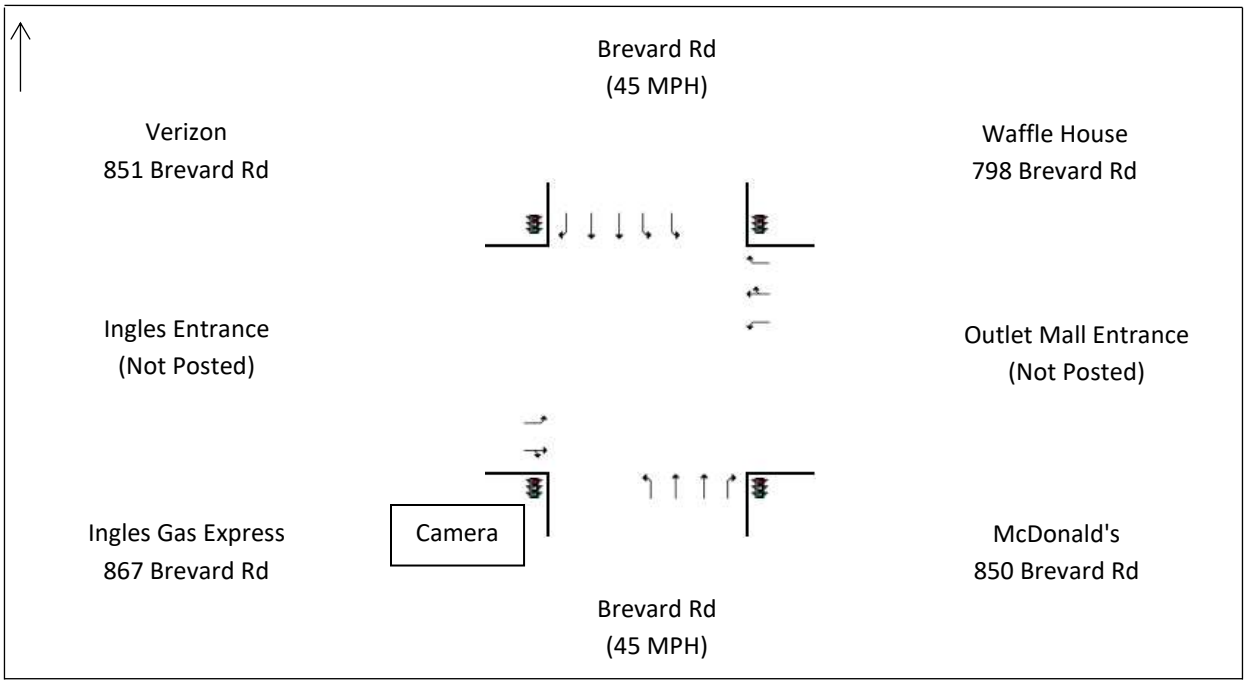

DocuSign Envelope ID: 5C03745C-4B01-4834-A65D-B77F558A4F46

Quality Counts

920 Blairhill Rd, Ste B-106
Charlotte, NC 28217

File Name : 15411705 - Brevard Rd -- Ingles_Outlet Mall Entrance
Site Code : 15411705
Start Date : 4/20/2021
Page No : 1

Groups Printed- Classes 1, 2, 3 - Classes 4, 5, 6, 7 - Classes 8, 9, 10 - Classes 11, 12, 13

	Brevard Rd Southbound					Outlet Mall Entrance Westbound					Brevard Rd Northbound					Ingles Entrance Eastbound					
Start Time	Left	Thru	Right	U-Turn	App. Total	Left	Thru	Right	U-Turn	App. Total	Left	Thru	Right	U-Turn	App. Total	Left	Thru	Right	U-Turn	App. Total	Int. Total
06:00 AM	15	46	4	0	65	3	0	3	0	6	3	48	3	1	55	2	0	0	0	2	128
06:15 AM	9	73	9	0	91	3	2	3	0	8	7	64	4	0	75	4	1	2	0	7	181
06:30 AM	13	130	9	0	152	7	0	9	0	16	4	97	8	0	109	7	0	9	0	16	293
06:45 AM	15	142	11	0	168	6	0	9	0	15	12	111	9	1	133	5	0	3	0	8	324
Total	52	391	33	0	476	19	2	24	0	45	26	320	24	2	372	18	1	14	0	33	926
07:00 AM	12	129	19	0	160	6	0	17	0	23	7	155	10	2	174	12	1	4	0	17	374
07:15 AM	19	138	20	0	177	7	0	12	0	19	12	186	11	1	210	10	1	10	0	21	427
07:30 AM	23	188	19	0	230	6	0	17	0	23	9	204	12	0	225	7	1	8	0	16	494
07:45 AM	26	235	22	0	283	8	0	13	0	21	17	218	14	0	249	11	2	12	0	25	578
Total	80	690	80	0	850	27	0	59	0	86	45	763	47	3	858	40	5	34	0	79	1873
08:00 AM	21	198	30	0	249	5	3	17	0	25	14	203	14	1	232	13	2	6	0	21	527
08:15 AM	24	221	20	0	265	9	0	21	0	30	8	190	12	0	210	11	3	11	0	25	530
08:30 AM	17	151	18	0	186	4	0	15	0	19	12	172	11	3	198	16	2	8	0	26	429
08:45 AM	24	161	24	0	209	6	3	24	0	33	9	164	12	0	185	13	0	8	1	22	449
Total	86	731	92	0	909	24	6	77	0	107	43	729	49	4	825	53	7	33	1	94	1935
09:00 AM	20	146	21	0	187	7	1	13	0	21	9	135	13	1	158	7	2	8	0	17	383
09:15 AM	27	147	19	0	193	3	1	16	0	20	11	140	15	0	166	16	2	9	0	27	406
09:30 AM	28	151	13	0	192	10	2	17	0	29	12	182	4	2	200	16	0	6	0	22	443
09:45 AM	27	158	22	0	207	5	3	13	0	21	11	131	10	1	153	12	4	9	0	25	406
Total	102	602	75	0	779	25	7	59	0	91	43	588	42	4	677	51	8	32	0	91	1638
10:00 AM	29	181	16	0	226	6	3	17	0	26	11	154	5	0	170	16	5	5	0	26	448
10:15 AM	35	176	12	0	223	6	3	21	0	30	9	150	9	2	170	15	1	8	0	24	447
10:30 AM	40	158	14	0	212	11	1	15	0	27	11	175	7	1	194	9	2	7	0	18	451
10:45 AM	51	205	13	0	269	4	4	25	0	33	11	150	11	1	173	14	2	8	0	24	499
Total	155	720	55	0	930	27	11	78	0	116	42	629	32	4	707	54	10	28	0	92	1845
11:00 AM	50	166	16	0	232	5	5	33	0	43	11	158	6	2	177	4	4	7	0	15	467
11:15 AM	36	153	18	0	207	7	6	28	0	41	18	165	9	0	192	16	0	6	0	22	462
11:30 AM	36	161	27	0	224	8	5	30	0	43	21	151	15	3	190	14	1	16	0	31	488
11:45 AM	49	181	25	0	255	7	3	32	0	42	13	181	13	1	208	16	4	9	0	29	534
Total	171	661	86	0	918	27	19	123	0	169	63	655	43	6	767	50	9	38	0	97	1951
12:00 PM	60	168	23	0	251	8	12	48	0	68	26	180	24	2	232	20	8	8	0	36	587
12:15 PM	55	195	21	0	271	12	5	65	0	82	24	195	12	1	232	20	4	17	0	41	626
12:30 PM	55	187	25	0	267	11	2	63	0	76	22	203	11	0	236	14	4	14	0	32	611
12:45 PM	54	184	34	0	272	15	7	62	0	84	15	206	14	1	236	21	2	21	0	44	636
Total	224	734	103	0	1061	46	26	238	0	310	87	784	61	4	936	75	18	60	0	153	2460
01:00 PM	63	185	25	0	273	7	4	52	1	64	16	195	8	1	220	22	0	13	0	35	592
01:15 PM	55	207	34	0	296	9	3	51	0	63	23	191	18	3	235	18	4	16	0	38	632
01:30 PM	40	206	25	0	271	15	1	58	0	74	17	186	11	1	215	21	5	7	0	33	593
01:45 PM	55	187	28	0	270	13	2	50	0	65	19	177	9	2	207	12	5	9	0	26	568
Total	213	785	112	0	1110	44	10	211	1	266	75	749	46	7	877	73	14	45	0	132	2385
02:00 PM	38	192	24	0	254	12	9	64	1	86	20	217	12	1	250	24	4	11	0	39	629
02:15 PM	45	206	28	0	279	4	4	46	0	54	18	219	7	1	245	21	4	11	0	36	614
02:30 PM	48	184	22	0	254	14	4	39	0	57	17	235	8	2	262	19	2	16	0	37	610
02:45 PM	42	200	26	0	268	4	4	36	0	44	19	243	8	1	271	25	5	13	0	43	626
Total	173	782	100	0	1055	34	21	185	1	241	74	914	35	5	1028	89	15	51	0	155	2479
03:00 PM	47	202	33	0	282	11	5	53	0	69	23	242	3	0	268	16	1	12	0	29	648
03:15 PM	39	242	31	0	312	11	3	52	0	66	18	254	10	1	283	20	1	21	0	42	703
03:30 PM	40	174	30	0	244	4	6	42	0	52	16	260	10	2	288	24	2	10	0	36	620

DocuSign Envelope ID: 5C03745C-4B01-4834-A65D-B77F558A4F46

Quality Counts

920 Blairhill Rd, Ste B-106
Charlotte, NC 28217

File Name : 15411705 - Brevard Rd -- Ingles_Outlet Mall Entrance
Site Code : 15411705
Start Date : 4/20/2021
Page No : 2

Groups Printed- Classes 1, 2, 3 - Classes 4, 5, 6, 7 - Classes 8, 9, 10 - Classes 11, 12, 13

	Brevard Rd Southbound					Outlet Mall Entrance Westbound					Brevard Rd Northbound					Ingles Entrance Eastbound					
Start Time	Left	Thru	Right	U-Turn	App. Total	Left	Thru	Right	U-Turn	App. Total	Left	Thru	Right	U-Turn	App. Total	Left	Thru	Right	U-Turn	App. Total	Int. Total
03:45 PM	51	204	35	0	290	12	1	38	0	51	27	256	5	2	290	23	2	9	0	34	665
Total	177	822	129	0	1128	38	15	185	0	238	84	1012	28	5	1129	83	6	52	0	141	2636
04:00 PM	40	222	28	0	290	12	2	48	0	62	27	253	4	2	286	38	2	13	0	53	691
04:15 PM	55	217	33	0	305	10	3	51	0	64	15	249	9	1	274	25	1	10	0	36	679
04:30 PM	55	195	34	0	284	5	2	44	0	51	22	253	8	2	285	18	4	9	1	32	652
04:45 PM	44	209	30	0	283	9	2	42	0	53	27	262	9	0	298	23	1	10	0	34	668
Total	194	843	125	0	1162	36	9	185	0	230	91	1017	30	5	1143	104	8	42	1	155	2690
05:00 PM	36	237	30	0	303	13	6	47	1	67	15	280	7	3	305	29	2	7	0	38	713
05:15 PM	41	217	40	1	299	10	7	54	0	71	17	279	8	0	304	20	1	22	0	43	717
05:30 PM	30	209	33	0	272	10	7	38	0	55	15	280	7	1	303	22	6	9	0	37	667
05:45 PM	34	213	20	0	267	6	3	42	0	51	25	203	7	1	236	29	2	8	0	39	593
Total	141	876	123	1	1141	39	23	181	1	244	72	1042	29	5	1148	100	11	46	0	157	2690
06:00 PM	39	203	24	0	266	5	1	54	0	60	21	165	7	1	194	23	1	16	0	40	560
06:15 PM	14	152	29	0	195	11	5	39	0	55	18	132	8	2	160	22	2	10	0	34	444
06:30 PM	28	139	22	0	189	6	5	33	0	44	17	171	10	3	201	20	0	14	0	34	468
06:45 PM	15	124	17	0	156	8	5	34	0	47	19	155	5	0	179	14	2	12	0	28	410
Total	96	618	92	0	806	30	16	160	0	206	75	623	30	6	734	79	5	52	0	136	1882
Grand Total	1864	9255	1205	1	12325	416	165	1765	3	2349	820	9825	496	60	11201	869	117	527	2	1515	27390
Apprch %	15.1	75.1	9.8	0		17.7	7	75.1	0.1		7.3	87.7	4.4	0.5		57.4	7.7	34.8	0.1		
Total %	6.8	33.8	4.4	0	45	1.5	0.6	6.4	0	8.6	3	35.9	1.8	0.2	40.9	3.2	0.4	1.9	0	5.5	
Classes 1, 2, 3	1831	8692	1180	0	11703	409	165	1717	3	2294	809	9162	489	59	10519	843	112	521	2	1478	25994
% Classes 1, 2, 3	98.2	93.9	97.9	0	95	98.3	100	97.3	100	97.7	98.7	93.3	98.6	98.3	93.9	97	95.7	98.9	100	97.6	94.9
Classes 4, 5, 6, 7	30	364	24	1	419	5	0	45	0	50	10	491	7	1	509	22	5	6	0	33	1011
% Classes 4, 5, 6, 7	1.6	3.9	2	100	3.4	1.2	0	2.5	0	2.1	1.2	5	1.4	1.7	4.5	2.5	4.3	1.1	0	2.2	3.7
Classes 8, 9, 10	3	199	1	0	203	2	0	3	0	5	1	172	0	0	173	4	0	0	0	4	385
% Classes 8, 9, 10	0.2	2.2	0.1	0	1.6	0.5	0	0.2	0	0.2	0.1	1.8	0	0	1.5	0.5	0	0	0	0.3	1.4
Classes 11, 12, 13	0	0	0	0	0	0	0	0	0	0	0	0	0	0	0	0	0	0	0	0	0
% Classes 11, 12, 13	0	0	0	0	0	0	0	0	0	0	0	0	0	0	0	0	0	0	0	0	0

DocuSign Envelope ID: 5C03745C-4B01-4834-A65D-B77F558A4F46

Quality Counts

920 Blairhill Rd, Ste B-106
Charlotte, NC 28217

File Name : 15411705 - Brevard Rd -- Ingles_Outlet Mall Entrance
Site Code : 15411705
Start Date : 4/20/2021
Page No : 3

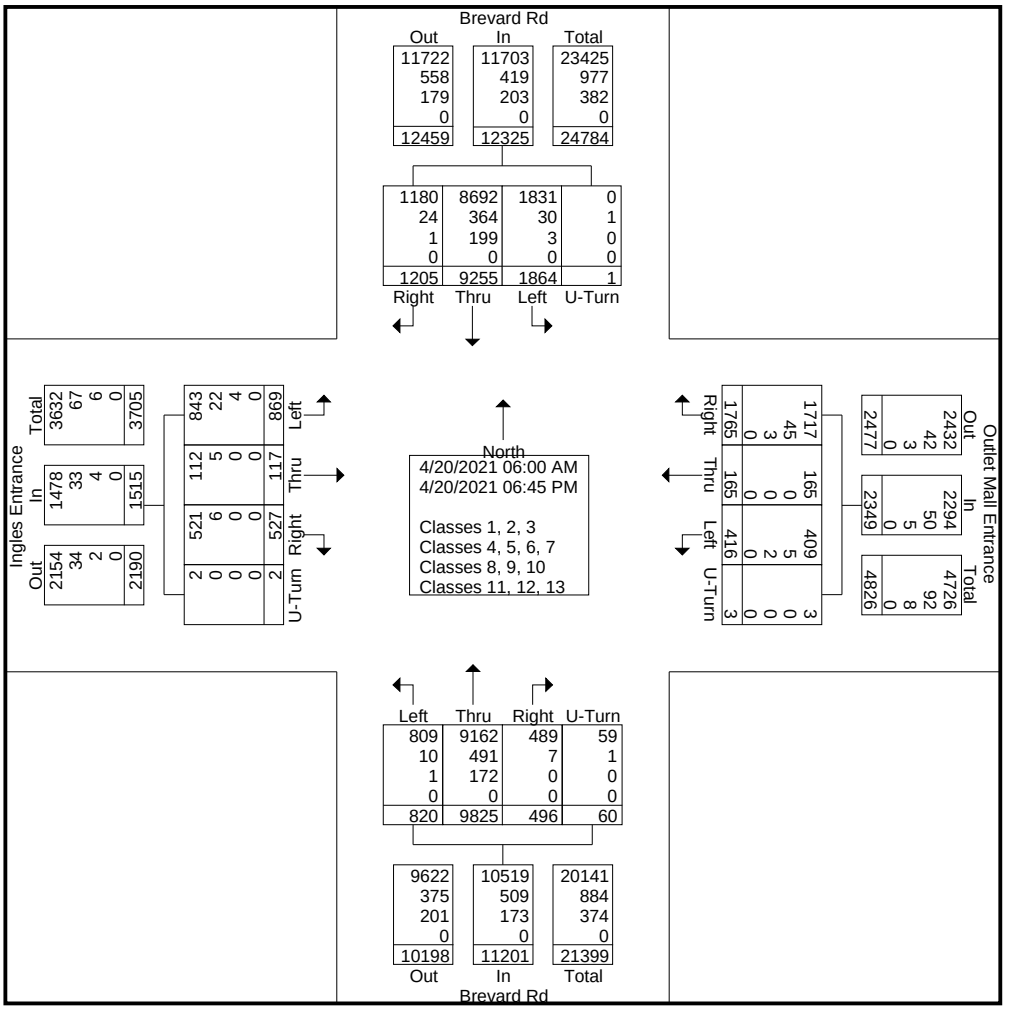

DocuSign Envelope ID: 5C03745C-4B01-4834-A65D-B77F558A4F46

Quality Counts

920 Blairhill Rd, Ste B-106
Charlotte, NC 28217

File Name : 15411705 - Brevard Rd -- Ingles_Outlet Mall Entrance
Site Code : 15411705
Start Date : 4/20/2021
Page No : 4

	Brevard Rd Southbound					Outlet Mall Entrance Westbound					Brevard Rd Northbound					Ingles Entrance Eastbound					
Start Time	Left	Thru	Right	U-Turn	App. Total	Left	Thru	Right	U-Turn	App. Total	Left	Thru	Right	U-Turn	App. Total	Left	Thru	Right	U-Turn	App. Total	Int. Total
Peak Hour Analysis From 06:00 AM to 11:45 AM - Peak 1 of 1																					
Peak Hour for Entire Intersection Begins at 07:30 AM																					
07:30 AM	23	188	19	0	230	6	0	17	0	23	9	204	12	0	225	7	1	8	0	16	494
07:45 AM	**26**	**235**	22	0	**283**	8	0	13	0	21	**17**	**218**	**14**	0	**249**	11	2	**12**	0	**25**	**578**
08:00 AM	21	198	**30**	0	249	5	**3**	17	0	25	14	203	14	**1**	232	**13**	2	6	0	21	527
08:15 AM	24	221	20	0	265	**9**	0	**21**	0	**30**	8	190	12	0	210	11	**3**	11	0	25	530
Total Volume	94	842	91	0	1027	28	3	68	0	99	48	815	52	1	916	42	8	37	0	87	2129
% App. Total	9.2	82	8.9	0		28.3	3	68.7	0		5.2	89	5.7	0.1		48.3	9.2	42.5	0		
PHF	.904	.896	.758	.000	.907	.778	.250	.810	.000	.825	.706	.935	.929	.250	.920	.808	.667	.771	.000	.870	.921

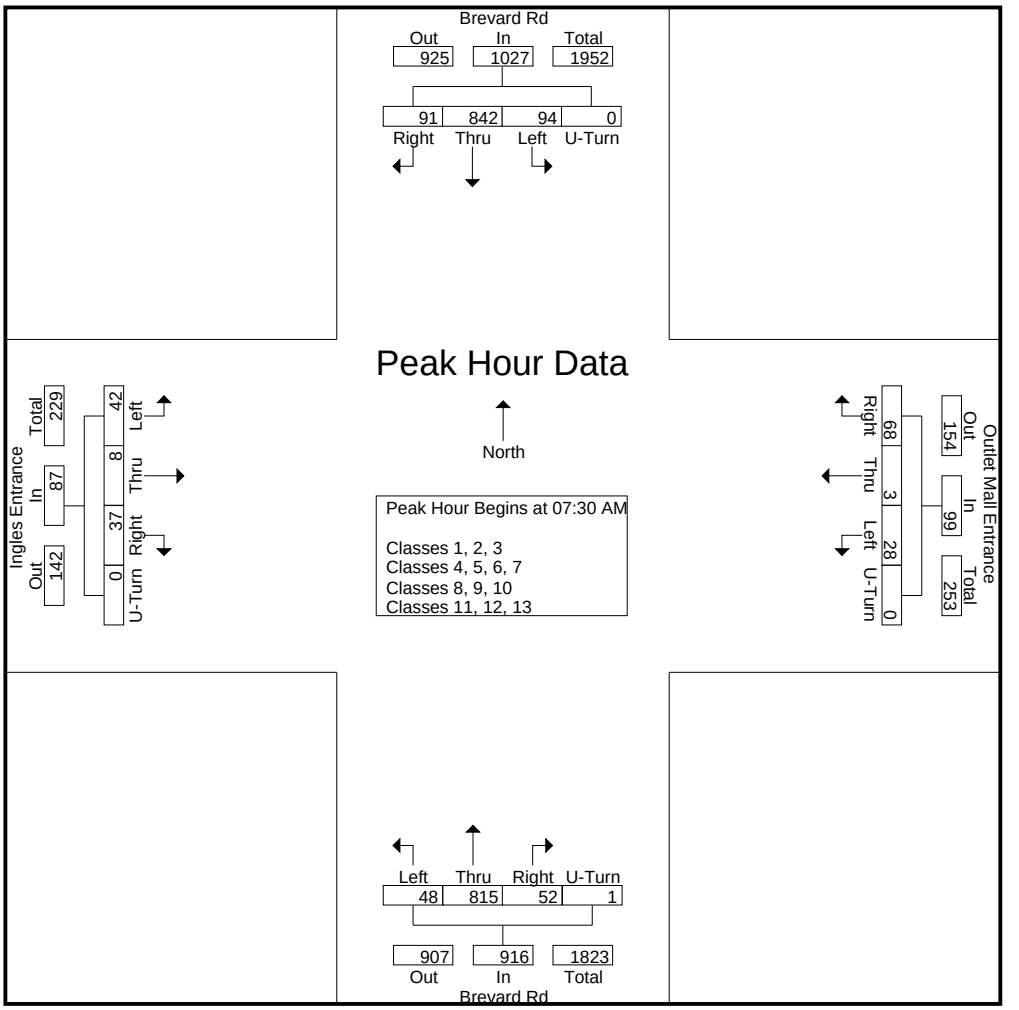

DocuSign Envelope ID: 5C03745C-4B01-4834-A65D-B77F558A4F46

Quality Counts

920 Blairhill Rd, Ste B-106
Charlotte, NC 28217

File Name : 15411705 - Brevard Rd -- Ingles_Outlet Mall Entrance
Site Code : 15411705
Start Date : 4/20/2021

	Brevard Rd Southbound					Outlet Mall Entrance Westbound					Brevard Rd Northbound					Ingles Entrance Eastbound					
Start Time	Left	Thru	Right	U-Turn	App. Total	Left	Thru	Right	U-Turn	App. Total	Left	Thru	Right	U-Turn	App. Total	Left	Thru	Right	U-Turn	App. Total	Int. Total
Peak Hour Analysis From 12:00 PM to 06:45 PM - Peak 1 of 1																					
Peak Hour for Entire Intersection Begins at 04:45 PM																					
04:45 PM	**44**	209	30	0	283	9	2	42	0	53	**27**	262	**9**	0	298	23	1	10	0	34	668
05:00 PM	36	**237**	30	0	**303**	**13**	6	47	**1**	67	15	**280**	7	**3**	**305**	**29**	2	7	0	38	713
05:15 PM	41	217	**40**	**1**	299	10	**7**	**54**	0	**71**	17	279	8	0	304	20	1	**22**	0	**43**	**717**
05:30 PM	30	209	33	0	272	10	7	38	0	55	15	280	7	1	303	22	**6**	9	0	37	667
Total Volume	151	872	133	1	1157	42	22	181	1	246	74	1101	31	4	1210	94	10	48	0	152	2765
% App. Total	13.1	75.4	11.5	0.1		17.1	8.9	73.6	0.4		6.1	91	2.6	0.3		61.8	6.6	31.6	0		
PHF	.858	.920	.831	.250	.955	.808	.786	.838	.250	.866	.685	.983	.861	.333	.992	.810	.417	.545	.000	.884	.964

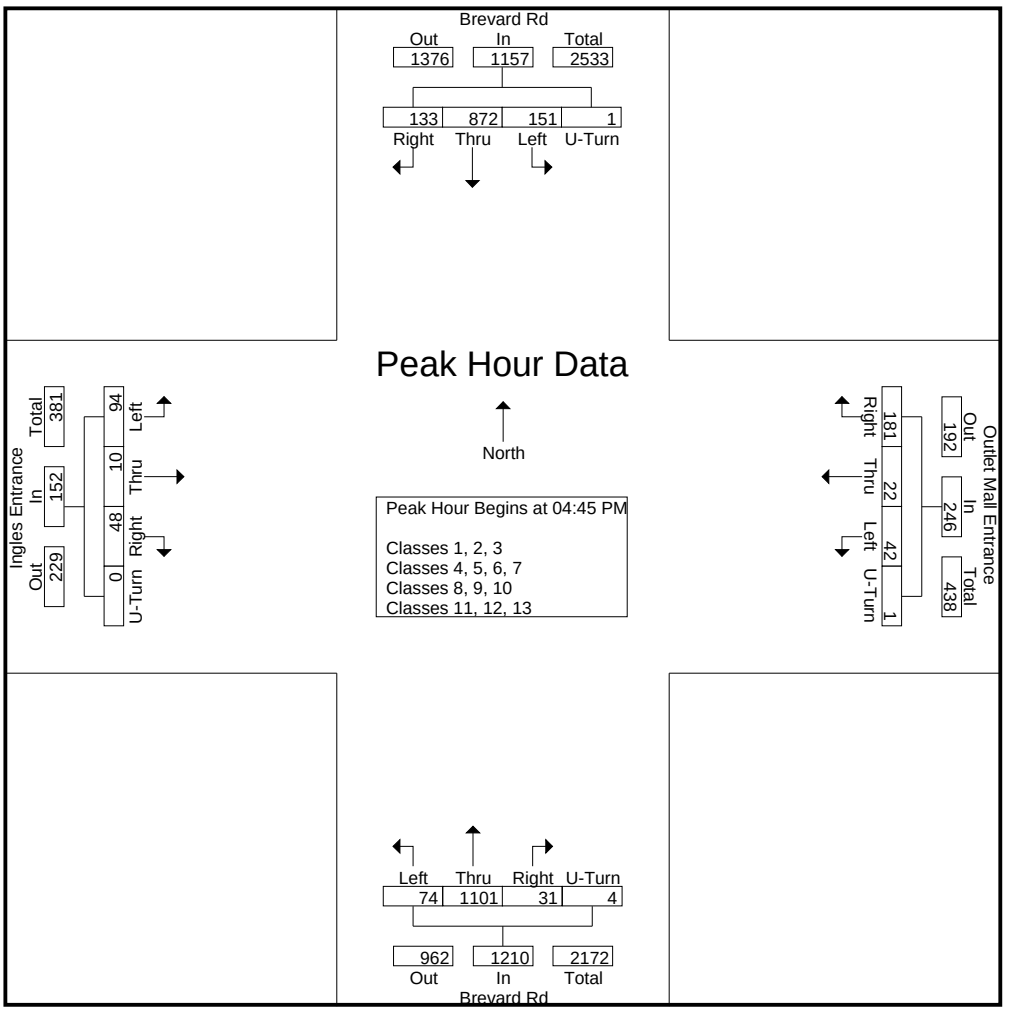

DocuSign Envelope ID: 5C03745C-4B01-4834-A65D-B77F558A4F46

Quality Counts

920 Blairhill Rd, Ste B-106
Charlotte, NC 28217

File Name : 15411705 - Brevard Rd -- Ingles_Outlet Mall Entrance
Site Code : 15411705
Start Date : 4/20/2021
Page No : 1

Groups Printed- Classes 1, 2, 3

	Brevard Rd Southbound					Outlet Mall Entrance Westbound					Brevard Rd Northbound					Ingles Entrance Eastbound					
Start Time	Left	Thru	Right	U-Turn	App. Total	Left	Thru	Right	U-Turn	App. Total	Left	Thru	Right	U-Turn	App. Total	Left	Thru	Right	U-Turn	App. Total	Int. Total
06:00 AM	15	46	4	0	65	3	0	3	0	6	2	43	3	1	49	2	0	0	0	2	122
06:15 AM	9	69	9	0	87	3	2	2	0	7	6	57	3	0	66	3	1	2	0	6	166
06:30 AM	12	125	9	0	146	7	0	9	0	16	3	86	8	0	97	6	0	9	0	15	274
06:45 AM	13	131	10	0	154	6	0	9	0	15	12	96	9	1	118	4	0	3	0	7	294
Total	49	371	32	0	452	19	2	23	0	44	23	282	23	2	330	15	1	14	0	30	856
07:00 AM	12	118	18	0	148	6	0	15	0	21	6	141	10	2	159	11	1	4	0	16	344
07:15 AM	17	130	19	0	166	7	0	12	0	19	12	181	11	1	205	10	1	8	0	19	409
07:30 AM	21	182	18	0	221	6	0	16	0	22	9	191	12	0	212	5	1	8	0	14	469
07:45 AM	26	222	21	0	269	8	0	12	0	20	17	205	14	0	236	10	1	12	0	23	548
Total	76	652	76	0	804	27	0	55	0	82	44	718	47	3	812	36	4	32	0	72	1770
08:00 AM	21	191	29	0	241	5	3	14	0	22	14	188	13	1	216	13	2	6	0	21	500
08:15 AM	23	209	20	0	252	9	0	20	0	29	8	170	12	0	190	9	3	11	0	23	494
08:30 AM	17	141	18	0	176	4	0	13	0	17	12	161	11	3	187	16	2	8	0	26	406
08:45 AM	22	147	24	0	193	6	3	23	0	32	8	149	11	0	168	12	0	8	1	21	414
Total	83	688	91	0	862	24	6	70	0	100	42	668	47	4	761	50	7	33	1	91	1814
09:00 AM	20	132	21	0	173	7	1	12	0	20	8	121	13	1	143	7	2	8	0	17	353
09:15 AM	26	135	19	0	180	3	1	16	0	20	11	124	15	0	150	16	1	9	0	26	376
09:30 AM	27	131	13	0	171	10	2	15	0	27	12	157	4	2	175	16	0	6	0	22	395
09:45 AM	26	143	22	0	191	5	3	12	0	20	11	115	10	1	137	11	4	9	0	24	372
Total	99	541	75	0	715	25	7	55	0	87	42	517	42	4	605	50	7	32	0	89	1496
10:00 AM	29	168	14	0	211	5	3	16	0	24	11	138	5	0	154	16	5	5	0	26	415
10:15 AM	35	157	12	0	204	5	3	20	0	28	9	133	9	2	153	15	1	8	0	24	409
10:30 AM	39	145	14	0	198	11	1	15	0	27	11	161	7	0	179	9	2	7	0	18	422
10:45 AM	50	182	13	0	245	4	4	23	0	31	10	135	11	1	157	14	2	8	0	24	457
Total	153	652	53	0	858	25	11	74	0	110	41	567	32	3	643	54	10	28	0	92	1703
11:00 AM	50	156	15	0	221	5	5	32	0	42	10	150	6	2	168	4	4	7	0	15	446
11:15 AM	36	144	18	0	198	7	6	28	0	41	18	147	9	0	174	15	0	5	0	20	433
11:30 AM	34	147	26	0	207	8	5	29	0	42	21	137	15	3	176	14	1	16	0	31	456
11:45 AM	47	168	25	0	240	7	3	32	0	42	13	161	13	1	188	14	4	9	0	27	497
Total	167	615	84	0	866	27	19	121	0	167	62	595	43	6	706	47	9	37	0	93	1832
12:00 PM	60	156	22	0	238	7	12	47	0	66	25	169	22	2	218	20	8	8	0	36	558
12:15 PM	52	186	20	0	258	12	5	63	0	80	24	175	12	1	212	19	4	17	0	40	590
12:30 PM	54	176	23	0	253	11	2	62	0	75	21	185	11	0	217	14	4	14	0	32	577
12:45 PM	54	170	32	0	256	15	7	61	0	83	15	196	14	1	226	19	2	21	0	42	607
Total	220	688	97	0	1005	45	26	233	0	304	85	725	59	4	873	72	18	60	0	150	2332
01:00 PM	62	162	24	0	248	7	4	50	1	62	16	182	8	1	207	22	0	12	0	34	551
01:15 PM	55	196	33	0	284	9	3	50	0	62	23	179	17	3	222	17	4	16	0	37	605
01:30 PM	39	192	24	0	255	14	1	58	0	73	17	166	11	1	195	20	3	7	0	30	553
01:45 PM	53	175	27	0	255	13	2	47	0	62	19	163	9	2	193	12	4	9	0	25	535
Total	209	725	108	0	1042	43	10	205	1	259	75	690	45	7	817	71	11	44	0	126	2244
02:00 PM	38	184	24	0	246	12	9	63	1	85	20	203	12	1	236	23	4	11	0	38	605
02:15 PM	44	194	28	0	266	4	4	44	0	52	18	203	7	1	229	20	4	11	0	35	582
02:30 PM	46	171	22	0	239	13	4	39	0	56	17	220	8	2	247	19	2	16	0	37	579
02:45 PM	42	188	26	0	256	4	4	35	0	43	19	235	8	1	263	25	5	13	0	43	605
Total	170	737	100	0	1007	33	21	181	1	236	74	861	35	5	975	87	15	51	0	153	2371
03:00 PM	46	192	33	0	271	11	5	50	0	66	23	228	3	0	254	16	1	12	0	29	620
03:15 PM	39	221	31	0	291	11	3	52	0	66	18	239	10	1	268	20	1	21	0	42	667
03:30 PM	40	167	27	0	234	4	6	42	0	52	16	244	10	2	272	24	2	10	0	36	594

DocuSign Envelope ID: 5C03745C-4B01-4834-A65D-B77F558A4F46

Quality Counts

920 Blairhill Rd, Ste B-106
Charlotte, NC 28217

File Name : 15411705 - Brevard Rd -- Ingles_Outlet Mall Entrance
Site Code : 15411705
Start Date : 4/20/2021

Groups Printed- Classes 1, 2, 3

	Brevard Rd Southbound					Outlet Mall Entrance Westbound					Brevard Rd Northbound					Ingles Entrance Eastbound					
Start Time	Left	Thru	Right	U-Turn	App. Total	Left	Thru	Right	U-Turn	App. Total	Left	Thru	Right	U-Turn	App. Total	Left	Thru	Right	U-Turn	App. Total	Int. Total
03:45 PM	50	186	35	0	271	12	1	38	0	51	27	244	5	2	278	21	2	8	0	31	631
Total	175	766	126	0	1067	38	15	182	0	235	84	955	28	5	1072	81	6	51	0	138	2512
04:00 PM	40	202	28	0	270	11	2	47	0	60	27	241	4	2	274	37	2	13	0	52	656
04:15 PM	55	205	33	0	293	10	3	51	0	64	15	236	8	1	260	25	1	10	0	36	653
04:30 PM	55	190	34	0	279	5	2	43	0	50	22	237	8	2	269	18	4	9	1	32	630
04:45 PM	44	204	30	0	278	9	2	42	0	53	26	251	9	0	286	23	1	10	0	34	651
Total	194	801	125	0	1120	35	9	183	0	227	90	965	29	5	1089	103	8	42	1	154	2590
05:00 PM	36	230	30	0	296	12	6	44	1	63	15	273	7	3	298	29	2	7	0	38	695
05:15 PM	41	214	40	0	295	10	7	54	0	71	17	266	8	0	291	19	1	22	0	42	699
05:30 PM	30	202	33	0	265	10	7	38	0	55	15	273	7	1	296	22	6	9	0	37	653
05:45 PM	34	205	20	0	259	6	3	42	0	51	25	199	7	1	232	29	2	8	0	39	581
Total	141	851	123	0	1115	38	23	178	1	240	72	1011	29	5	1117	99	11	46	0	156	2628
06:00 PM	39	200	23	0	262	5	1	52	0	58	21	161	7	1	190	22	1	15	0	38	548
06:15 PM	14	146	28	0	188	11	5	38	0	54	18	128	8	2	156	22	2	10	0	34	432
06:30 PM	27	138	22	0	187	6	5	33	0	44	17	167	10	3	197	20	0	14	0	34	462
06:45 PM	15	121	17	0	153	8	5	34	0	47	19	152	5	0	176	14	2	12	0	28	404
Total	95	605	90	0	790	30	16	157	0	203	75	608	30	6	719	78	5	51	0	134	1846
Grand Total	1831	8692	1180	0	11703	409	165	1717	3	2294	809	9162	489	59	10519	843	112	521	2	1478	25994
Apprch %	15.6	74.3	10.1	0		17.8	7.2	74.8	0.1		7.7	87.1	4.6	0.6		57	7.6	35.3	0.1		
Total %	7	33.4	4.5	0	45	1.6	0.6	6.6	0	8.8	3.1	35.2	1.9	0.2	40.5	3.2	0.4	2	0	5.7	

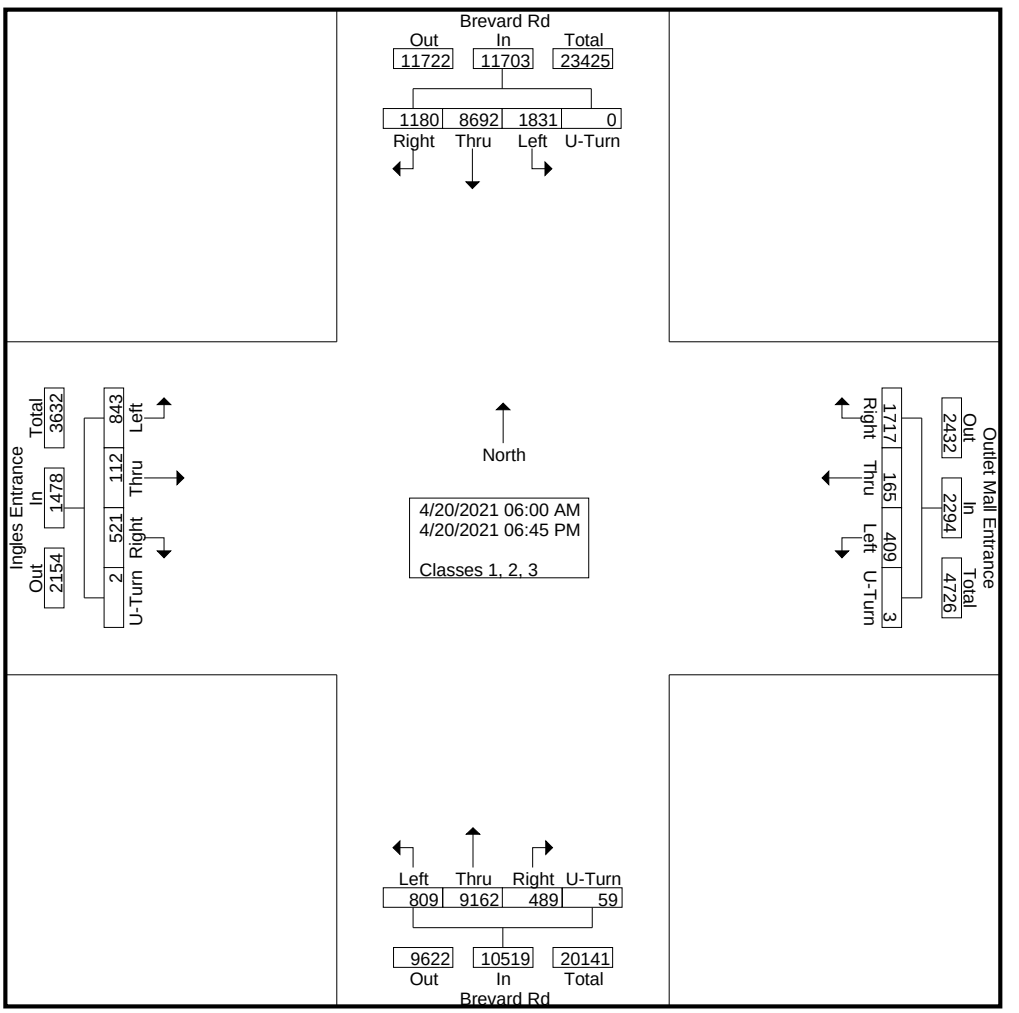

DocuSign Envelope ID: 5C03745C-4B01-4834-A65D-B77F558A4F46

Quality Counts

920 Blairhill Rd, Ste B-106
Charlotte, NC 28217

File Name : 15411705 - Brevard Rd -- Ingles_Outlet Mall Entrance
Site Code : 15411705
Start Date : 4/20/2021
Page No : 3

	Brevard Rd Southbound					Outlet Mall Entrance Westbound					Brevard Rd Northbound					Ingles Entrance Eastbound					
Start Time	Left	Thru	Right	U-Turn	App. Total	Left	Thru	Right	U-Turn	App. Total	Left	Thru	Right	U-Turn	App. Total	Left	Thru	Right	U-Turn	App. Total	Int. Total
Peak Hour Analysis From 06:00 AM to 11:45 AM - Peak 1 of 1																					
Peak Hour for Entire Intersection Begins at 07:30 AM																					
07:30 AM	21	182	18	0	221	6	0	16	0	22	9	191	12	0	212	5	1	8	0	14	469
07:45 AM	**26**	**222**	21	0	**269**	8	0	12	0	20	**17**	**205**	**14**	0	**236**	10	1	**12**	0	**23**	**548**
08:00 AM	21	191	**29**	0	241	5	**3**	14	0	22	14	188	13	**1**	216	**13**	2	6	0	21	500
08:15 AM	23	209	20	0	252	**9**	0	**20**	0	**29**	8	170	12	0	190	9	**3**	11	0	23	494
Total Volume	91	804	88	0	983	28	3	62	0	93	48	754	51	1	854	37	7	37	0	81	2011
% App. Total	9.3	81.8	9	0		30.1	3.2	66.7	0		5.6	88.3	6	0.1		45.7	8.6	45.7	0		
PHF	.875	.905	.759	.000	.914	.778	.250	.775	.000	.802	.706	.920	.911	.250	.905	.712	.583	.771	.000	.880	.917

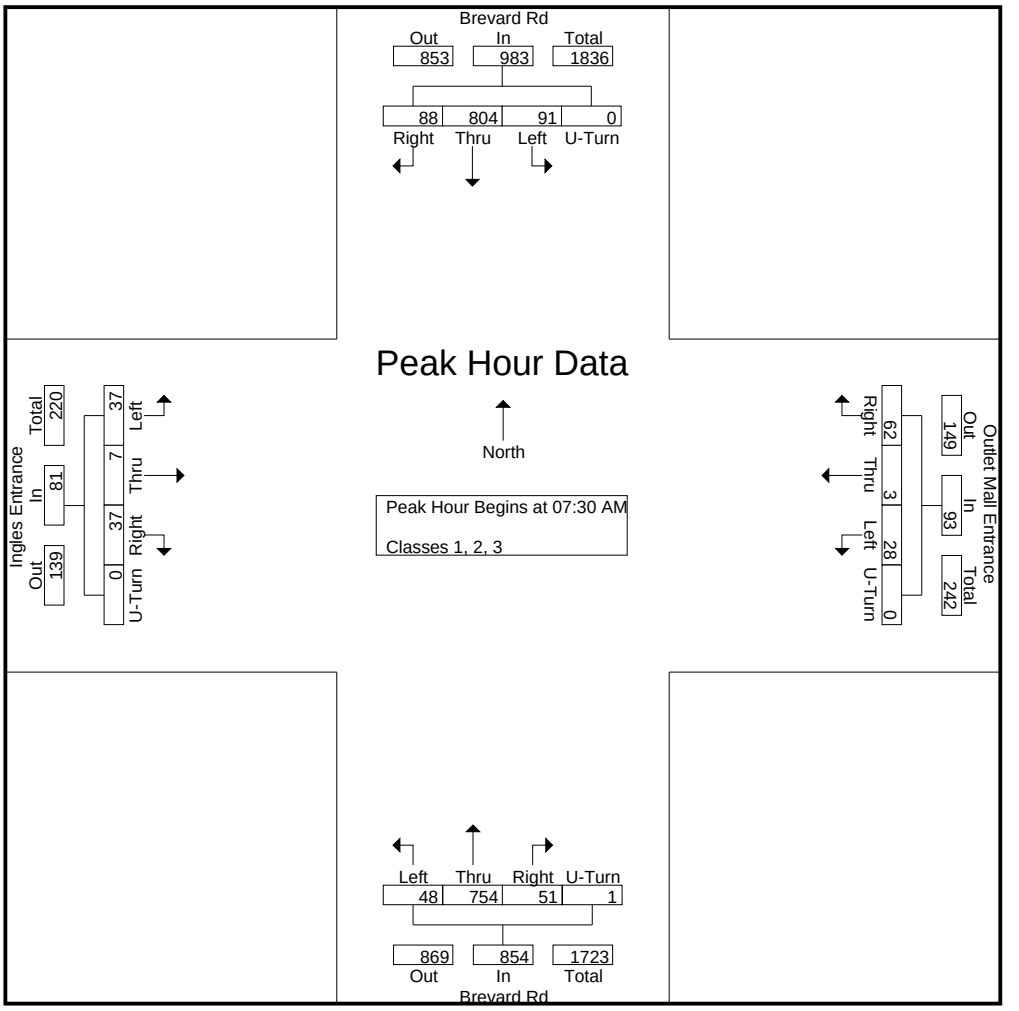

DocuSign Envelope ID: 5C03745C-4B01-4834-A65D-B77F558A4F46

Quality Counts

920 Blairhill Rd, Ste B-106
Charlotte, NC 28217

File Name : 15411705 - Brevard Rd -- Ingles_Outlet Mall Entrance
Site Code : 15411705
Start Date : 4/20/2021

	Brevard Rd Southbound					Outlet Mall Entrance Westbound					Brevard Rd Northbound					Ingles Entrance Eastbound					
Start Time	Left	Thru	Right	U-Turn	App. Total	Left	Thru	Right	U-Turn	App. Total	Left	Thru	Right	U-Turn	App. Total	Left	Thru	Right	U-Turn	App. Total	Int. Total
Peak Hour Analysis From 12:00 PM to 06:45 PM - Peak 1 of 1																					
Peak Hour for Entire Intersection Begins at 04:45 PM																					
04:45 PM	**44**	204	30	0	278	9	2	42	0	53	**26**	251	**9**	0	286	23	1	10	0	34	651
05:00 PM	36	**230**	30	0	**296**	**12**	6	44	**1**	63	15	**273**	7	**3**	**298**	**29**	2	7	0	38	695
05:15 PM	41	214	**40**	0	295	10	**7**	**54**	0	**71**	17	266	8	0	291	19	1	**22**	0	**42**	**699**
05:30 PM	30	202	33	0	265	10	7	38	0	55	15	273	7	1	296	22	**6**	9	0	37	653
Total Volume	151	850	133	0	1134	41	22	178	1	242	73	1063	31	4	1171	93	10	48	0	151	2698
% App. Total	13.3	75	11.7	0		16.9	9.1	73.6	0.4		6.2	90.8	2.6	0.3		61.6	6.6	31.8	0		
PHF	.858	.924	.831	.000	.958	.854	.786	.824	.250	.852	.702	.973	.861	.333	.982	.802	.417	.545	.000	.899	.965

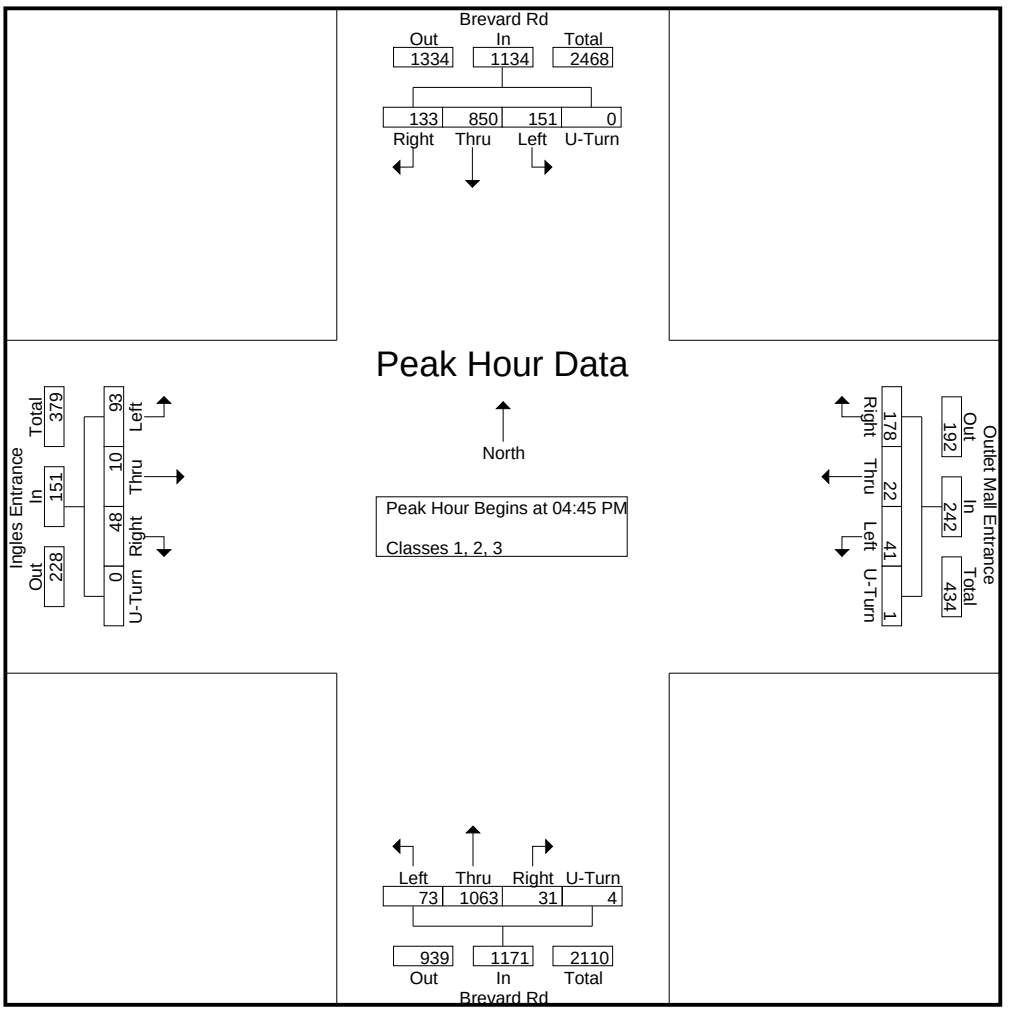

DocuSign Envelope ID: 5C03745C-4B01-4834-A65D-B77F558A4F46

Quality Counts

920 Blairhill Rd, Ste B-106
Charlotte, NC 28217

File Name : 15411705 - Brevard Rd -- Ingles_Outlet Mall Entrance
Site Code : 15411705
Start Date : 4/20/2021
Page No : 1

Groups Printed- Classes 4, 5, 6, 7

	Brevard Rd Southbound					Outlet Mall Entrance Westbound					Brevard Rd Northbound					Ingles Entrance Eastbound					
Start Time	Left	Thru	Right	U-Turn	App. Total	Left	Thru	Right	U-Turn	App. Total	Left	Thru	Right	U-Turn	App. Total	Left	Thru	Right	U-Turn	App. Total	Int. Total
06:00 AM	0	0	0	0	0	0	0	0	0	0	1	3	0	0	4	0	0	0	0	0	4
06:15 AM	0	2	0	0	2	0	0	1	0	1	1	7	1	0	9	1	0	0	0	1	13
06:30 AM	1	3	0	0	4	0	0	0	0	0	1	11	0	0	12	1	0	0	0	1	17
06:45 AM	1	10	1	0	12	0	0	0	0	0	0	12	0	0	12	1	0	0	0	1	25
Total	2	15	1	0	18	0	0	1	0	1	3	33	1	0	37	3	0	0	0	3	59
07:00 AM	0	8	1	0	9	0	0	2	0	2	1	10	0	0	11	1	0	0	0	1	23
07:15 AM	2	4	1	0	7	0	0	0	0	0	0	5	0	0	5	0	0	2	0	2	14
07:30 AM	1	4	1	0	6	0	0	1	0	1	0	8	0	0	8	2	0	0	0	2	17
07:45 AM	0	8	1	0	9	0	0	1	0	1	0	7	0	0	7	1	1	0	0	2	19
Total	3	24	4	0	31	0	0	4	0	4	1	30	0	0	31	4	1	2	0	7	73
08:00 AM	0	6	1	0	7	0	0	3	0	3	0	10	1	0	11	0	0	0	0	0	21
08:15 AM	1	6	0	0	7	0	0	0	0	0	0	12	0	0	12	2	0	0	0	2	21
08:30 AM	0	5	0	0	5	0	0	1	0	1	0	9	0	0	9	0	0	0	0	0	15
08:45 AM	2	9	0	0	11	0	0	1	0	1	1	13	1	0	15	1	0	0	0	1	28
Total	3	26	1	0	30	0	0	5	0	5	1	44	2	0	47	3	0	0	0	3	85
09:00 AM	0	7	0	0	7	0	0	1	0	1	0	12	0	0	12	0	0	0	0	0	20
09:15 AM	1	3	0	0	4	0	0	0	0	0	0	10	0	0	10	0	1	0	0	1	15
09:30 AM	1	13	0	0	14	0	0	1	0	1	0	18	0	0	18	0	0	0	0	0	33
09:45 AM	1	10	0	0	11	0	0	1	0	1	0	12	0	0	12	0	0	0	0	0	24
Total	3	33	0	0	36	0	0	3	0	3	0	52	0	0	52	0	1	0	0	1	92
10:00 AM	0	6	2	0	8	0	0	1	0	1	0	14	0	0	14	0	0	0	0	0	23
10:15 AM	0	14	0	0	14	1	0	1	0	2	0	15	0	0	15	0	0	0	0	0	31
10:30 AM	1	12	0	0	13	0	0	0	0	0	0	10	0	1	11	0	0	0	0	0	24
10:45 AM	1	13	0	0	14	0	0	2	0	2	1	12	0	0	13	0	0	0	0	0	29
Total	2	45	2	0	49	1	0	4	0	5	1	51	0	1	53	0	0	0	0	0	107
11:00 AM	0	8	1	0	9	0	0	1	0	1	1	7	0	0	8	0	0	0	0	0	18
11:15 AM	0	5	0	0	5	0	0	0	0	0	0	13	0	0	13	1	0	1	0	2	20
11:30 AM	2	11	1	0	14	0	0	1	0	1	0	11	0	0	11	0	0	0	0	0	26
11:45 AM	2	8	0	0	10	0	0	0	0	0	0	12	0	0	12	1	0	0	0	1	23
Total	4	32	2	0	38	0	0	2	0	2	1	43	0	0	44	2	0	1	0	3	87
12:00 PM	0	7	1	0	8	0	0	1	0	1	1	7	2	0	10	0	0	0	0	0	19
12:15 PM	2	5	1	0	8	0	0	2	0	2	0	14	0	0	14	1	0	0	0	1	25
12:30 PM	1	8	2	0	11	0	0	1	0	1	1	13	0	0	14	0	0	0	0	0	26
12:45 PM	0	8	2	0	10	0	0	1	0	1	0	7	0	0	7	2	0	0	0	2	20
Total	3	28	6	0	37	0	0	5	0	5	2	41	2	0	45	3	0	0	0	3	90
01:00 PM	1	9	1	0	11	0	0	2	0	2	0	8	0	0	8	0	0	1	0	1	22
01:15 PM	0	6	1	0	7	0	0	1	0	1	0	10	1	0	11	1	0	0	0	1	20
01:30 PM	1	10	1	0	12	1	0	0	0	1	0	12	0	0	12	1	2	0	0	3	28
01:45 PM	2	10	1	0	13	0	0	3	0	3	0	11	0	0	11	0	1	0	0	1	28
Total	4	35	4	0	43	1	0	6	0	7	0	41	1	0	42	2	3	1	0	6	98
02:00 PM	0	5	0	0	5	0	0	1	0	1	0	8	0	0	8	1	0	0	0	1	15
02:15 PM	1	9	0	0	10	0	0	2	0	2	0	12	0	0	12	1	0	0	0	1	25
02:30 PM	2	6	0	0	8	1	0	0	0	1	0	12	0	0	12	0	0	0	0	0	21
02:45 PM	0	9	0	0	9	0	0	1	0	1	0	6	0	0	6	0	0	0	0	0	16
Total	3	29	0	0	32	1	0	4	0	5	0	38	0	0	38	2	0	0	0	2	77
03:00 PM	1	6	0	0	7	0	0	3	0	3	0	10	0	0	10	0	0	0	0	0	20
03:15 PM	0	16	0	0	16	0	0	0	0	0	0	11	0	0	11	0	0	0	0	0	27
03:30 PM	0	5	2	0	7	0	0	0	0	0	0	14	0	0	14	0	0	0	0	0	21

DocuSign Envelope ID: 5C03745C-4B01-4834-A65D-B77F558A4F46

Quality Counts

920 Blairhill Rd, Ste B-106
Charlotte, NC 28217

File Name : 15411705 - Brevard Rd -- Ingles_Outlet Mall Entrance
Site Code : 15411705
Start Date : 4/20/2021
Page No : 2

Groups Printed- Classes 4, 5, 6, 7

	Brevard Rd Southbound					Outlet Mall Entrance Westbound					Brevard Rd Northbound					Ingles Entrance Eastbound					
Start Time	Left	Thru	Right	U-Turn	App. Total	Left	Thru	Right	U-Turn	App. Total	Left	Thru	Right	U-Turn	App. Total	Left	Thru	Right	U-Turn	App. Total	Int. Total
03:45 PM	1	15	0	0	16	0	0	0	0	0	0	11	0	0	11	1	0	1	0	2	29
Total	2	42	2	0	46	0	0	3	0	3	0	46	0	0	46	1	0	1	0	2	97
04:00 PM	0	16	0	0	16	1	0	1	0	2	0	10	0	0	10	0	0	0	0	0	28
04:15 PM	0	7	0	0	7	0	0	0	0	0	0	9	1	0	10	0	0	0	0	0	17
04:30 PM	0	3	0	0	3	0	0	1	0	1	0	11	0	0	11	0	0	0	0	0	15
04:45 PM	0	2	0	0	2	0	0	0	0	0	1	8	0	0	9	0	0	0	0	0	11
Total	0	28	0	0	28	1	0	2	0	3	1	38	1	0	40	0	0	0	0	0	71
05:00 PM	0	5	0	0	5	1	0	3	0	4	0	7	0	0	7	0	0	0	0	0	16
05:15 PM	0	3	0	1	4	0	0	0	0	0	0	11	0	0	11	1	0	0	0	1	16
05:30 PM	0	5	0	0	5	0	0	0	0	0	0	3	0	0	3	0	0	0	0	0	8
05:45 PM	0	5	0	0	5	0	0	0	0	0	0	3	0	0	3	0	0	0	0	0	8
Total	0	18	0	1	19	1	0	3	0	4	0	24	0	0	24	1	0	0	0	1	48
06:00 PM	0	3	1	0	4	0	0	2	0	2	0	3	0	0	3	1	0	1	0	2	11
06:15 PM	0	4	1	0	5	0	0	1	0	1	0	3	0	0	3	0	0	0	0	0	9
06:30 PM	1	0	0	0	1	0	0	0	0	0	0	3	0	0	3	0	0	0	0	0	4
06:45 PM	0	2	0	0	2	0	0	0	0	0	0	1	0	0	1	0	0	0	0	0	3
Total	1	9	2	0	12	0	0	3	0	3	0	10	0	0	10	1	0	1	0	2	27
Grand Total	30	364	24	1	419	5	0	45	0	50	10	491	7	1	509	22	5	6	0	33	1011
Apprch %	7.2	86.9	5.7	0.2		10	0	90	0		2	96.5	1.4	0.2		66.7	15.2	18.2	0		
Total %	3	36	2.4	0.1	41.4	0.5	0	4.5	0	4.9	1	48.6	0.7	0.1	50.3	2.2	0.5	0.6	0	3.3	

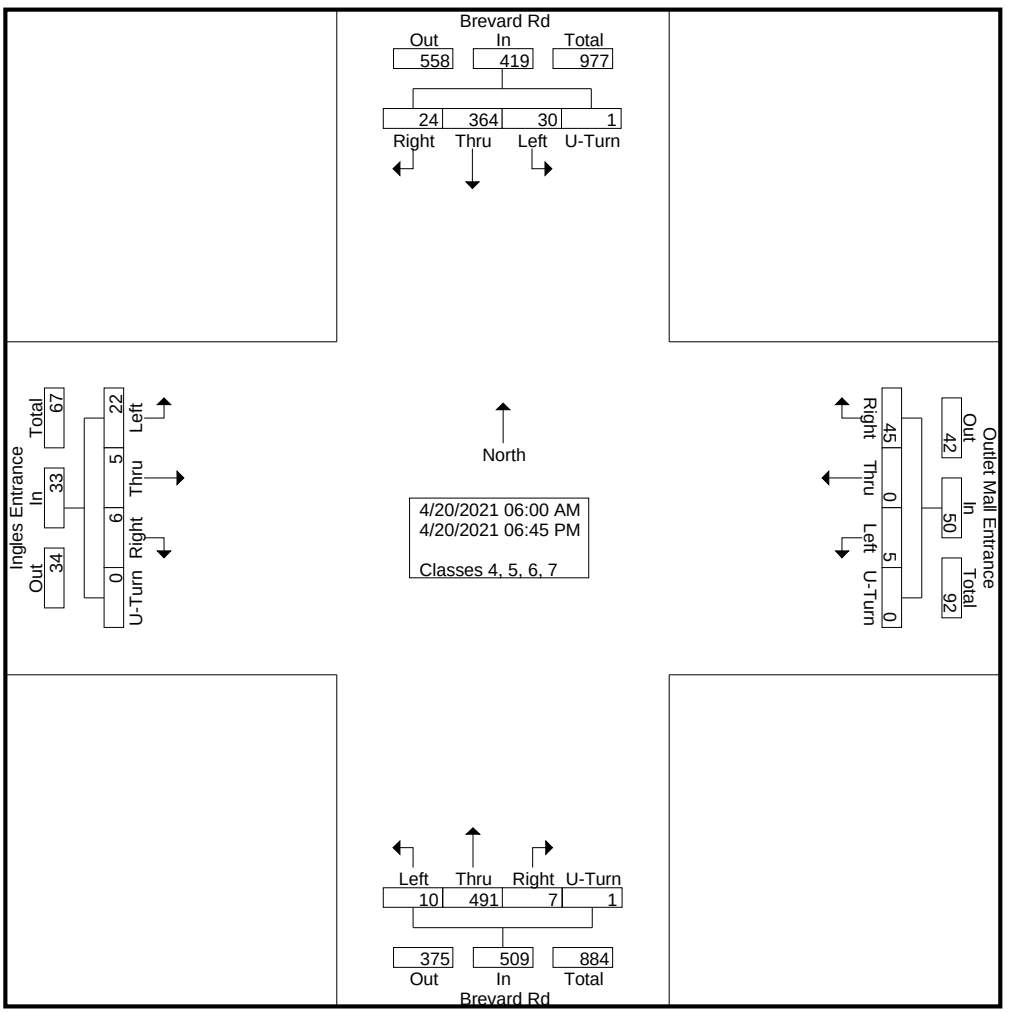

DocuSign Envelope ID: 5C03745C-4B01-4834-A65D-B77F558A4F46

Quality Counts

920 Blairhill Rd, Ste B-106
Charlotte, NC 28217

File Name : 15411705 - Brevard Rd -- Ingles_Outlet Mall Entrance
Site Code : 15411705
Start Date : 4/20/2021

	Brevard Rd Southbound					Outlet Mall Entrance Westbound					Brevard Rd Northbound					Ingles Entrance Eastbound					
Start Time	Left	Thru	Right	U-Turn	App. Total	Left	Thru	Right	U-Turn	App. Total	Left	Thru	Right	U-Turn	App. Total	Left	Thru	Right	U-Turn	App. Total	Int. Total
Peak Hour Analysis From 06:00 AM to 11:45 AM - Peak 1 of 1																					
Peak Hour for Entire Intersection Begins at 09:30 AM																					
09:30 AM	**1**	13	0	0	**14**	0	0	**1**	0	1	0	**18**	0	0	**18**	0	0	0	0	0	**33**
09:45 AM	1	10	0	0	11	0	0	1	0	1	0	12	0	0	12	0	0	0	0	0	24
10:00 AM	0	6	**2**	0	8	0	0	1	0	1	0	14	0	0	14	0	0	0	0	0	23
10:15 AM	0	**14**	0	0	14	**1**	0	1	0	**2**	0	15	0	0	15	0	0	0	0	0	31
Total Volume	2	43	2	0	47	1	0	4	0	5	0	59	0	0	59	0	0	0	0	0	111
% App. Total	4.3	91.5	4.3	0		20	0	80	0		0	100	0	0		0	0	0	0		
PHF	.500	.768	.250	.000	.839	.250	.000	1.00	.000	.625	.000	.819	.000	.000	.819	.000	.000	.000	.000	.000	.841

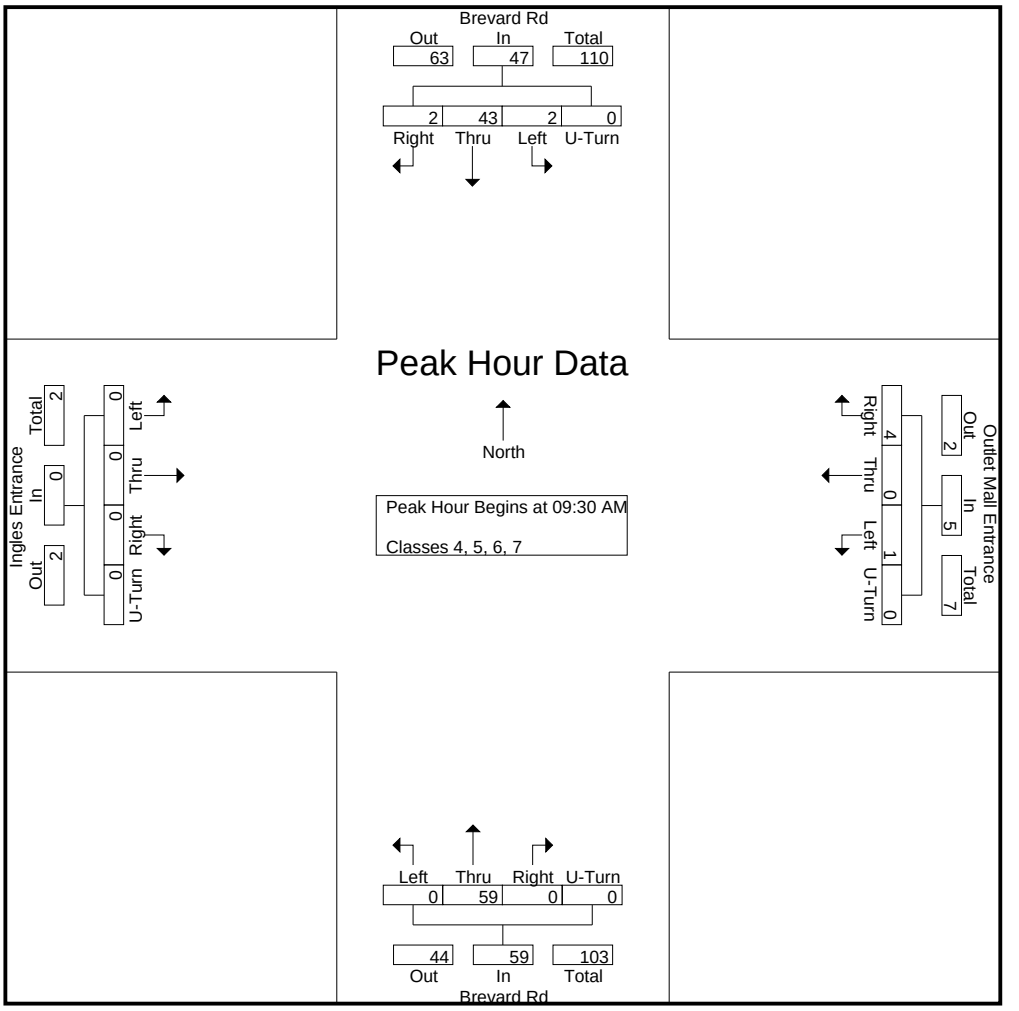

DocuSign Envelope ID: 5C03745C-4B01-4834-A65D-B77F558A4F46

Quality Counts

920 Blairhill Rd, Ste B-106
Charlotte, NC 28217

File Name : 15411705 - Brevard Rd -- Ingles_Outlet Mall Entrance
Site Code : 15411705
Start Date : 4/20/2021

	Brevard Rd Southbound					Outlet Mall Entrance Westbound					Brevard Rd Northbound					Ingles Entrance Eastbound					
Start Time	Left	Thru	Right	U-Turn	App. Total	Left	Thru	Right	U-Turn	App. Total	Left	Thru	Right	U-Turn	App. Total	Left	Thru	Right	U-Turn	App. Total	Int. Total
Peak Hour Analysis From 12:00 PM to 06:45 PM - Peak 1 of 1																					
Peak Hour for Entire Intersection Begins at 03:15 PM																					
03:15 PM	0	**16**	0	0	**16**	0	0	0	0	0	0	11	0	0	11	0	0	0	0	0	27
03:30 PM	0	5	**2**	0	7	0	0	0	0	0	0	**14**	0	0	**14**	0	0	0	0	0	21
03:45 PM	**1**	15	0	0	16	0	0	0	0	0	0	11	0	0	11	**1**	0	**1**	0	**2**	**29**
04:00 PM	0	16	0	0	16	**1**	0	**1**	0	**2**	0	10	0	0	10	0	0	0	0	0	28
Total Volume	1	52	2	0	55	1	0	1	0	2	0	46	0	0	46	1	0	1	0	2	105
% App. Total	1.8	94.5	3.6	0		50	0	50	0		0	100	0	0		50	0	50	0		
PHF	.250	.813	.250	.000	.859	.250	.000	.250	.000	.250	.000	.821	.000	.000	.821	.250	.000	.250	.000	.250	.905

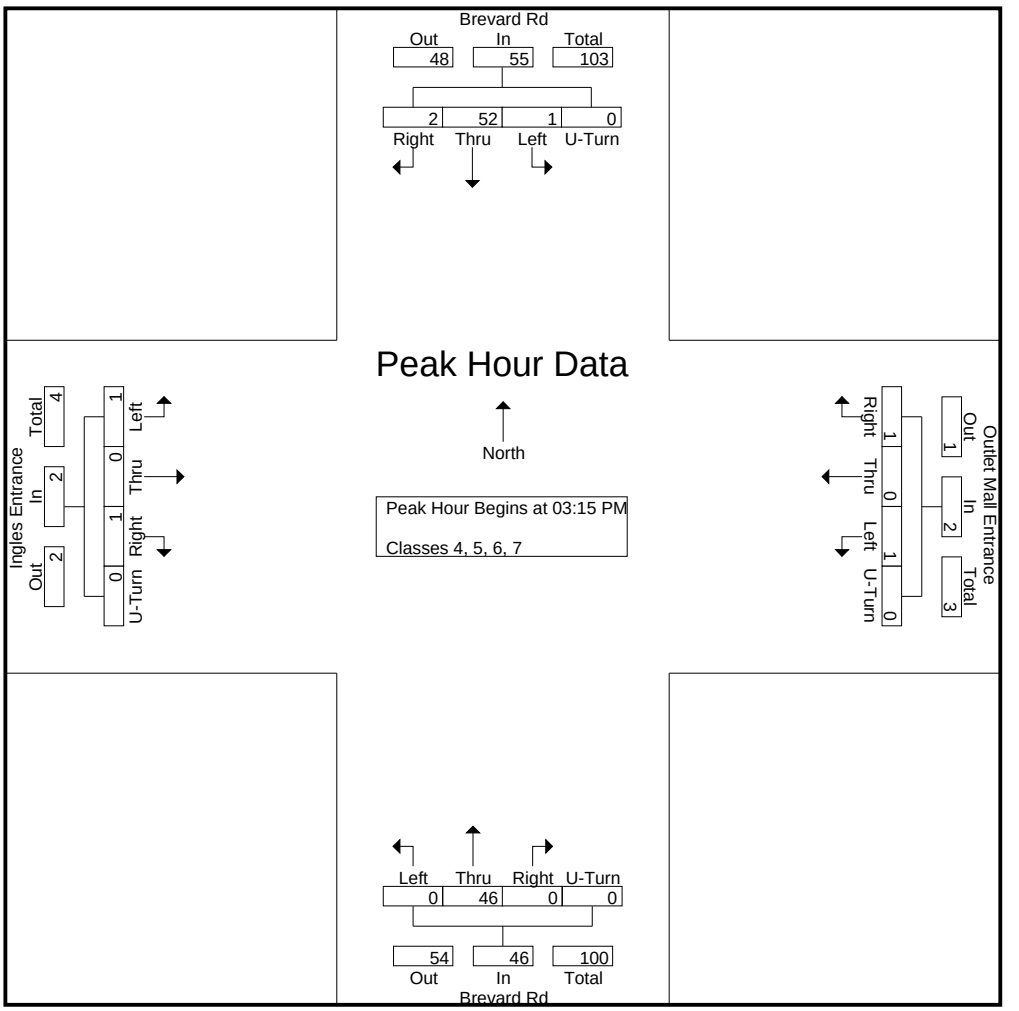

DocuSign Envelope ID: 5C03745C-4B01-4834-A65D-B77F558A4F46

Quality Counts

920 Blairhill Rd, Ste B-106
Charlotte, NC 28217

File Name : 15411705 - Brevard Rd -- Ingles_Outlet Mall Entrance
Site Code : 15411705
Start Date : 4/20/2021
Page No : 1

Groups Printed- Classes 8, 9, 10

	Brevard Rd Southbound					Outlet Mall Entrance Westbound					Brevard Rd Northbound					Ingles Entrance Eastbound					
Start Time	Left	Thru	Right	U-Turn	App. Total	Left	Thru	Right	U-Turn	App. Total	Left	Thru	Right	U-Turn	App. Total	Left	Thru	Right	U-Turn	App. Total	Int. Total
06:00 AM	0	0	0	0	0	0	0	0	0	0	0	2	0	0	2	0	0	0	0	0	2
06:15 AM	0	2	0	0	2	0	0	0	0	0	0	0	0	0	0	0	0	0	0	0	2
06:30 AM	0	2	0	0	2	0	0	0	0	0	0	0	0	0	0	0	0	0	0	0	2
06:45 AM	1	1	0	0	2	0	0	0	0	0	0	3	0	0	3	0	0	0	0	0	5
Total	1	5	0	0	6	0	0	0	0	0	0	5	0	0	5	0	0	0	0	0	11
07:00 AM	0	3	0	0	3	0	0	0	0	0	0	4	0	0	4	0	0	0	0	0	7
07:15 AM	0	4	0	0	4	0	0	0	0	0	0	0	0	0	0	0	0	0	0	0	4
07:30 AM	1	2	0	0	3	0	0	0	0	0	0	5	0	0	5	0	0	0	0	0	8
07:45 AM	0	5	0	0	5	0	0	0	0	0	0	6	0	0	6	0	0	0	0	0	11
Total	1	14	0	0	15	0	0	0	0	0	0	15	0	0	15	0	0	0	0	0	30
08:00 AM	0	1	0	0	1	0	0	0	0	0	0	5	0	0	5	0	0	0	0	0	6
08:15 AM	0	6	0	0	6	0	0	1	0	1	0	8	0	0	8	0	0	0	0	0	15
08:30 AM	0	5	0	0	5	0	0	1	0	1	0	2	0	0	2	0	0	0	0	0	8
08:45 AM	0	5	0	0	5	0	0	0	0	0	0	2	0	0	2	0	0	0	0	0	7
Total	0	17	0	0	17	0	0	2	0	2	0	17	0	0	17	0	0	0	0	0	36
09:00 AM	0	7	0	0	7	0	0	0	0	0	1	2	0	0	3	0	0	0	0	0	10
09:15 AM	0	9	0	0	9	0	0	0	0	0	0	6	0	0	6	0	0	0	0	0	15
09:30 AM	0	7	0	0	7	0	0	1	0	1	0	7	0	0	7	0	0	0	0	0	15
09:45 AM	0	5	0	0	5	0	0	0	0	0	0	4	0	0	4	1	0	0	0	1	10
Total	0	28	0	0	28	0	0	1	0	1	1	19	0	0	20	1	0	0	0	1	50
10:00 AM	0	7	0	0	7	1	0	0	0	1	0	2	0	0	2	0	0	0	0	0	10
10:15 AM	0	5	0	0	5	0	0	0	0	0	0	2	0	0	2	0	0	0	0	0	7
10:30 AM	0	1	0	0	1	0	0	0	0	0	0	4	0	0	4	0	0	0	0	0	5
10:45 AM	0	10	0	0	10	0	0	0	0	0	0	3	0	0	3	0	0	0	0	0	13
Total	0	23	0	0	23	1	0	0	0	1	0	11	0	0	11	0	0	0	0	0	35
11:00 AM	0	2	0	0	2	0	0	0	0	0	0	1	0	0	1	0	0	0	0	0	3
11:15 AM	0	4	0	0	4	0	0	0	0	0	0	5	0	0	5	0	0	0	0	0	9
11:30 AM	0	3	0	0	3	0	0	0	0	0	0	3	0	0	3	0	0	0	0	0	6
11:45 AM	0	5	0	0	5	0	0	0	0	0	0	8	0	0	8	1	0	0	0	1	14
Total	0	14	0	0	14	0	0	0	0	0	0	17	0	0	17	1	0	0	0	1	32
12:00 PM	0	5	0	0	5	1	0	0	0	1	0	4	0	0	4	0	0	0	0	0	10
12:15 PM	1	4	0	0	5	0	0	0	0	0	0	6	0	0	6	0	0	0	0	0	11
12:30 PM	0	3	0	0	3	0	0	0	0	0	0	5	0	0	5	0	0	0	0	0	8
12:45 PM	0	6	0	0	6	0	0	0	0	0	0	3	0	0	3	0	0	0	0	0	9
Total	1	18	0	0	19	1	0	0	0	1	0	18	0	0	18	0	0	0	0	0	38
01:00 PM	0	14	0	0	14	0	0	0	0	0	0	5	0	0	5	0	0	0	0	0	19
01:15 PM	0	5	0	0	5	0	0	0	0	0	0	2	0	0	2	0	0	0	0	0	7
01:30 PM	0	4	0	0	4	0	0	0	0	0	0	8	0	0	8	0	0	0	0	0	12
01:45 PM	0	2	0	0	2	0	0	0	0	0	0	3	0	0	3	0	0	0	0	0	5
Total	0	25	0	0	25	0	0	0	0	0	0	18	0	0	18	0	0	0	0	0	43
02:00 PM	0	3	0	0	3	0	0	0	0	0	0	6	0	0	6	0	0	0	0	0	9
02:15 PM	0	3	0	0	3	0	0	0	0	0	0	4	0	0	4	0	0	0	0	0	7
02:30 PM	0	7	0	0	7	0	0	0	0	0	0	3	0	0	3	0	0	0	0	0	10
02:45 PM	0	3	0	0	3	0	0	0	0	0	0	2	0	0	2	0	0	0	0	0	5
Total	0	16	0	0	16	0	0	0	0	0	0	15	0	0	15	0	0	0	0	0	31
03:00 PM	0	4	0	0	4	0	0	0	0	0	0	4	0	0	4	0	0	0	0	0	8
03:15 PM	0	5	0	0	5	0	0	0	0	0	0	4	0	0	4	0	0	0	0	0	9
03:30 PM	0	2	1	0	3	0	0	0	0	0	0	2	0	0	2	0	0	0	0	0	5

DocuSign Envelope ID: 5C03745C-4B01-4834-A65D-B77F558A4F46

Quality Counts

920 Blairhill Rd, Ste B-106
Charlotte, NC 28217

File Name : 15411705 - Brevard Rd -- Ingles_Outlet Mall Entrance
Site Code : 15411705
Start Date : 4/20/2021

Groups Printed- Classes 8, 9, 10

	Brevard Rd Southbound					Outlet Mall Entrance Westbound					Brevard Rd Northbound					Ingles Entrance Eastbound					
Start Time	Left	Thru	Right	U-Turn	App. Total	Left	Thru	Right	U-Turn	App. Total	Left	Thru	Right	U-Turn	App. Total	Left	Thru	Right	U-Turn	App. Total	Int. Total
03:45 PM	0	3	0	0	3	0	0	0	0	0	0	1	0	0	1	1	0	0	0	1	5
Total	0	14	1	0	15	0	0	0	0	0	0	11	0	0	11	1	0	0	0	1	27
04:00 PM	0	4	0	0	4	0	0	0	0	0	0	2	0	0	2	1	0	0	0	1	7
04:15 PM	0	5	0	0	5	0	0	0	0	0	0	4	0	0	4	0	0	0	0	0	9
04:30 PM	0	2	0	0	2	0	0	0	0	0	0	5	0	0	5	0	0	0	0	0	7
04:45 PM	0	3	0	0	3	0	0	0	0	0	0	3	0	0	3	0	0	0	0	0	6
Total	0	14	0	0	14	0	0	0	0	0	0	14	0	0	14	1	0	0	0	1	29
05:00 PM	0	2	0	0	2	0	0	0	0	0	0	0	0	0	0	0	0	0	0	0	2
05:15 PM	0	0	0	0	0	0	0	0	0	0	0	2	0	0	2	0	0	0	0	0	2
05:30 PM	0	2	0	0	2	0	0	0	0	0	0	4	0	0	4	0	0	0	0	0	6
05:45 PM	0	3	0	0	3	0	0	0	0	0	0	1	0	0	1	0	0	0	0	0	4
Total	0	7	0	0	7	0	0	0	0	0	0	7	0	0	7	0	0	0	0	0	14
06:00 PM	0	0	0	0	0	0	0	0	0	0	0	1	0	0	1	0	0	0	0	0	1
06:15 PM	0	2	0	0	2	0	0	0	0	0	0	1	0	0	1	0	0	0	0	0	3
06:30 PM	0	1	0	0	1	0	0	0	0	0	0	1	0	0	1	0	0	0	0	0	2
06:45 PM	0	1	0	0	1	0	0	0	0	0	0	2	0	0	2	0	0	0	0	0	3
Total	0	4	0	0	4	0	0	0	0	0	0	5	0	0	5	0	0	0	0	0	9
Grand Total	3	199	1	0	203	2	0	3	0	5	1	172	0	0	173	4	0	0	0	4	385
Apprch %	1.5	98	0.5	0		40	0	60	0		0.6	99.4	0	0		100	0	0	0		
Total %	0.8	51.7	0.3	0	52.7	0.5	0	0.8	0	1.3	0.3	44.7	0	0	44.9	1	0	0	0	1	

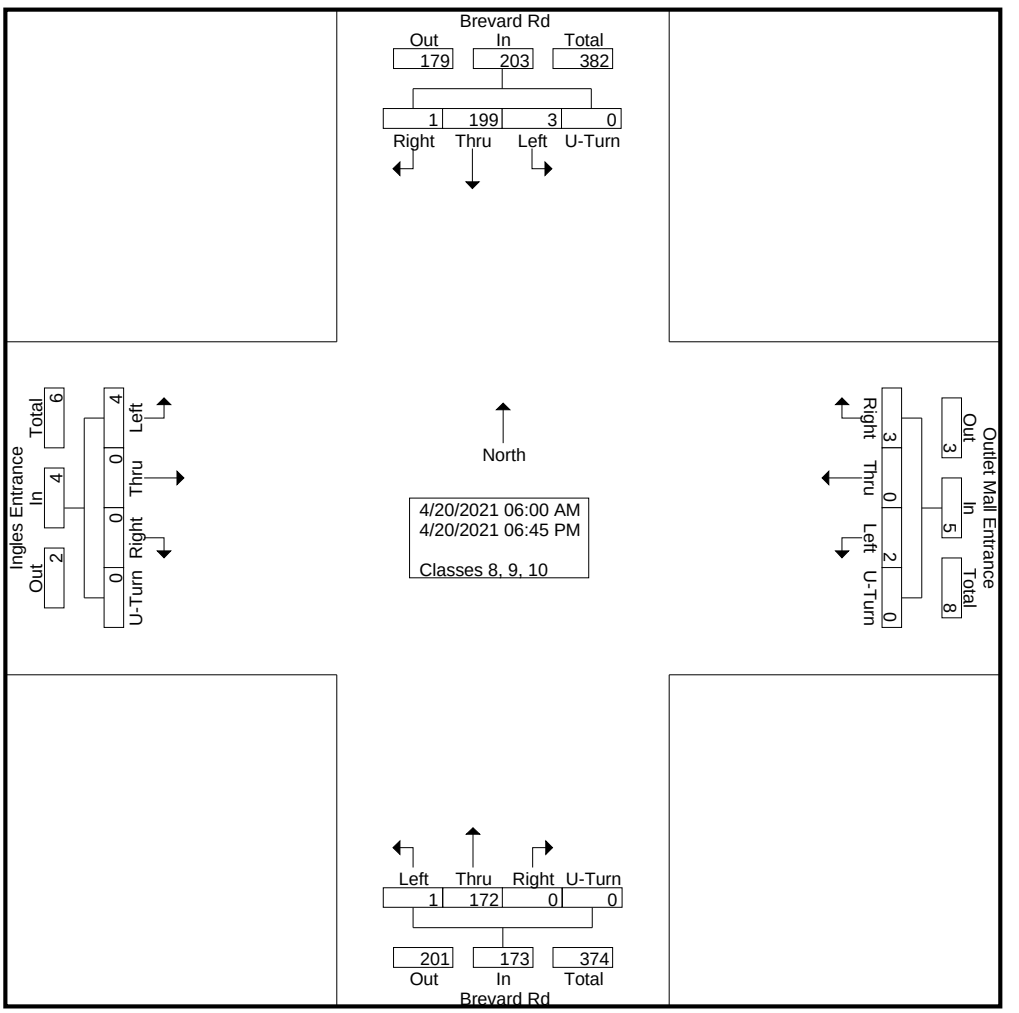

DocuSign Envelope ID: 5C03745C-4B01-4834-A65D-B77F558A4F46

Quality Counts

920 Blairhill Rd, Ste B-106
Charlotte, NC 28217

File Name : 15411705 - Brevard Rd -- Ingles_Outlet Mall Entrance
Site Code : 15411705
Start Date : 4/20/2021

	Brevard Rd Southbound					Outlet Mall Entrance Westbound					Brevard Rd Northbound					Ingles Entrance Eastbound					
Start Time	Left	Thru	Right	U-Turn	App. Total	Left	Thru	Right	U-Turn	App. Total	Left	Thru	Right	U-Turn	App. Total	Left	Thru	Right	U-Turn	App. Total	Int. Total
Peak Hour Analysis From 06:00 AM to 11:45 AM - Peak 1 of 1																					
Peak Hour for Entire Intersection Begins at 09:00 AM																					
09:00 AM	0	7	0	0	7	0	0	0	0	0	**1**	2	0	0	3	0	0	0	0	0	10
09:15 AM	0	**9**	0	0	**9**	0	0	0	0	0	0	6	0	0	6	0	0	0	0	0	**15**
09:30 AM	0	7	0	0	7	0	0	**1**	0	**1**	0	**7**	0	0	**7**	0	0	0	0	0	15
09:45 AM	0	5	0	0	5	0	0	0	0	0	0	4	0	0	4	**1**	0	0	0	**1**	10
Total Volume	0	28	0	0	28	0	0	1	0	1	1	19	0	0	20	1	0	0	0	1	50
% App. Total	0	100	0	0		0	0	100	0		5	95	0	0		100	0	0	0		
PHF	.000	.778	.000	.000	.778	.000	.000	.250	.000	.250	.250	.679	.000	.000	.714	.250	.000	.000	.000	.250	.833

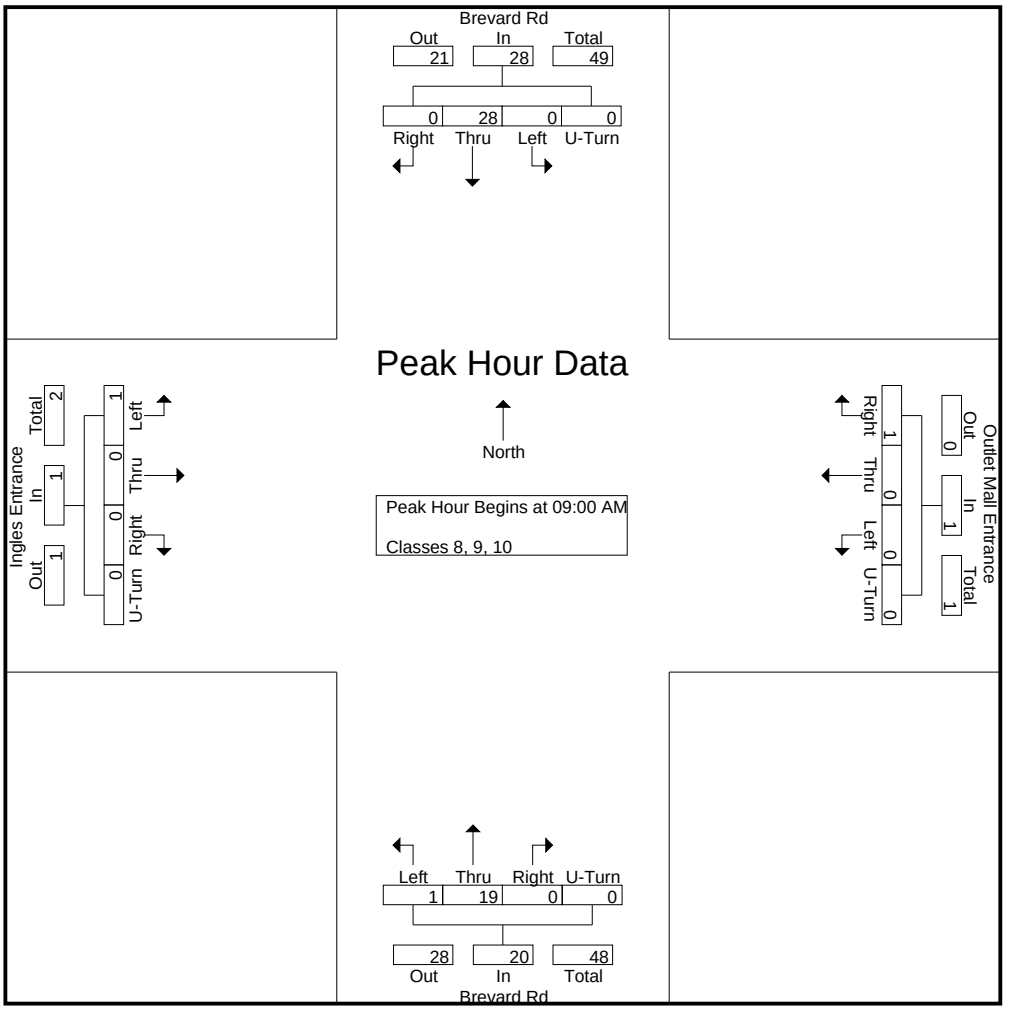

DocuSign Envelope ID: 5C03745C-4B01-4834-A65D-B77F558A4F46

Quality Counts

920 Blairhill Rd, Ste B-106
Charlotte, NC 28217

File Name : 15411705 - Brevard Rd -- Ingles_Outlet Mall Entrance
Site Code : 15411705
Start Date : 4/20/2021
Page No : 4

	Brevard Rd Southbound					Outlet Mall Entrance Westbound					Brevard Rd Northbound					Ingles Entrance Eastbound					
Start Time	Left	Thru	Right	U-Turn	App. Total	Left	Thru	Right	U-Turn	App. Total	Left	Thru	Right	U-Turn	App. Total	Left	Thru	Right	U-Turn	App. Total	Int. Total
Peak Hour Analysis From 12:00 PM to 06:45 PM - Peak 1 of 1																					
Peak Hour for Entire Intersection Begins at 12:15 PM																					
12:15 PM	**1**	4	0	0	5	0	0	0	0	0	0	**6**	0	0	**6**	0	0	0	0	0	11
12:30 PM	0	3	0	0	3	0	0	0	0	0	0	5	0	0	5	0	0	0	0	0	8
12:45 PM	0	6	0	0	6	0	0	0	0	0	0	3	0	0	3	0	0	0	0	0	9
01:00 PM	0	**14**	0	0	**14**	0	0	0	0	0	0	5	0	0	5	0	0	0	0	0	**19**
Total Volume	1	27	0	0	28	0	0	0	0	0	0	19	0	0	19	0	0	0	0	0	47
% App. Total	3.6	96.4	0	0		0	0	0	0		0	100	0	0		0	0	0	0		
PHF	.250	.482	.000	.000	.500	.000	.000	.000	.000	.000	.000	.792	.000	.000	.792	.000	.000	.000	.000	.000	.618

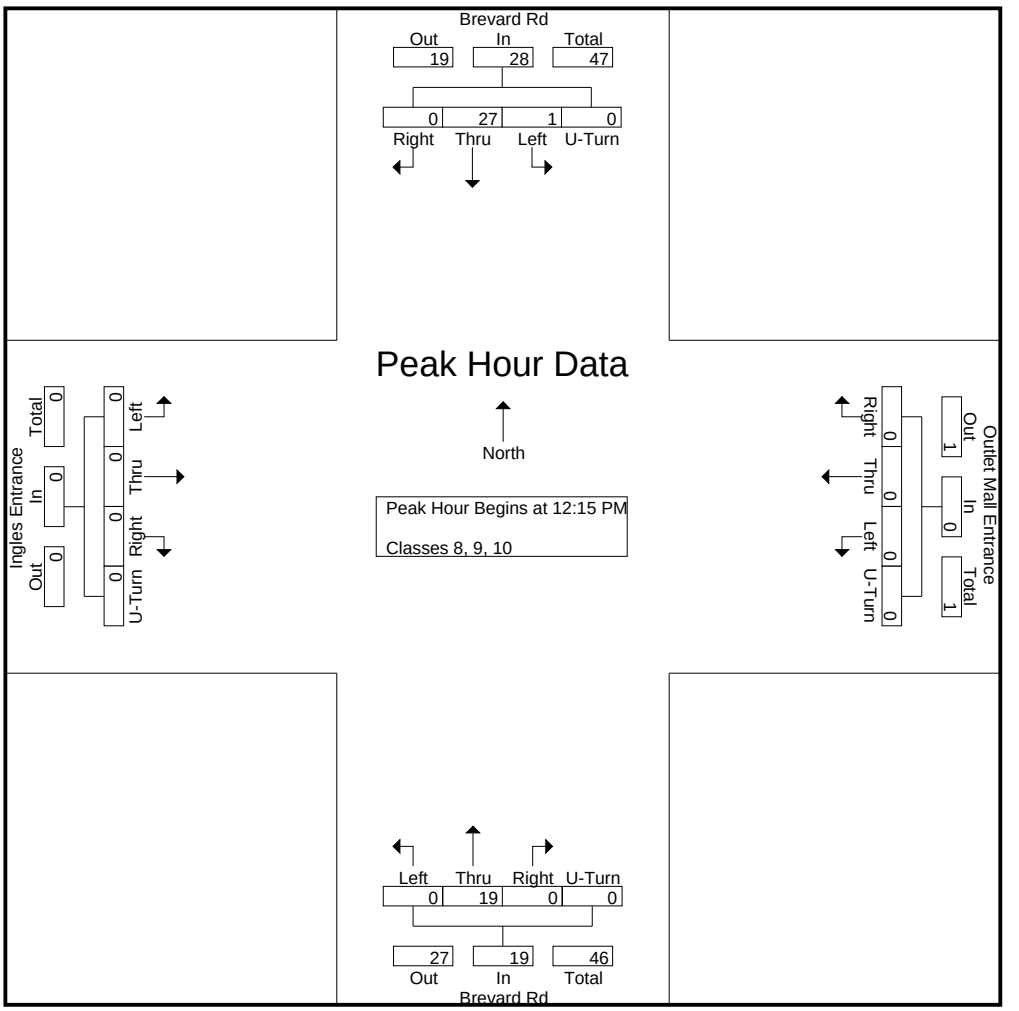

DocuSign Envelope ID: 5C03745C-4B01-4834-A65D-B77F558A4F46

Quality Counts

920 Blairhill Rd, Ste B-106
Charlotte, NC 28217

File Name : 15411705 - Brevard Rd -- Ingles_Outlet Mall Entrance
Site Code : 15411705
Start Date : 4/20/2021
Page No : 1

Groups Printed- Classes 11, 12, 13

	Brevard Rd Southbound					Outlet Mall Entrance Westbound					Brevard Rd Northbound					Ingles Entrance Eastbound					
Start Time	Left	Thru	Right	U-Turn	App. Total	Left	Thru	Right	U-Turn	App. Total	Left	Thru	Right	U-Turn	App. Total	Left	Thru	Right	U-Turn	App. Total	Int. Total
06:00 AM	0	0	0	0	0	0	0	0	0	0	0	0	0	0	0	0	0	0	0	0	0
06:15 AM	0	0	0	0	0	0	0	0	0	0	0	0	0	0	0	0	0	0	0	0	0
06:30 AM	0	0	0	0	0	0	0	0	0	0	0	0	0	0	0	0	0	0	0	0	0
06:45 AM	0	0	0	0	0	0	0	0	0	0	0	0	0	0	0	0	0	0	0	0	0
Total	0	0	0	0	0	0	0	0	0	0	0	0	0	0	0	0	0	0	0	0	0
07:00 AM	0	0	0	0	0	0	0	0	0	0	0	0	0	0	0	0	0	0	0	0	0
07:15 AM	0	0	0	0	0	0	0	0	0	0	0	0	0	0	0	0	0	0	0	0	0
07:30 AM	0	0	0	0	0	0	0	0	0	0	0	0	0	0	0	0	0	0	0	0	0
07:45 AM	0	0	0	0	0	0	0	0	0	0	0	0	0	0	0	0	0	0	0	0	0
Total	0	0	0	0	0	0	0	0	0	0	0	0	0	0	0	0	0	0	0	0	0
08:00 AM	0	0	0	0	0	0	0	0	0	0	0	0	0	0	0	0	0	0	0	0	0
08:15 AM	0	0	0	0	0	0	0	0	0	0	0	0	0	0	0	0	0	0	0	0	0
08:30 AM	0	0	0	0	0	0	0	0	0	0	0	0	0	0	0	0	0	0	0	0	0
08:45 AM	0	0	0	0	0	0	0	0	0	0	0	0	0	0	0	0	0	0	0	0	0
Total	0	0	0	0	0	0	0	0	0	0	0	0	0	0	0	0	0	0	0	0	0
09:00 AM	0	0	0	0	0	0	0	0	0	0	0	0	0	0	0	0	0	0	0	0	0
09:15 AM	0	0	0	0	0	0	0	0	0	0	0	0	0	0	0	0	0	0	0	0	0
09:30 AM	0	0	0	0	0	0	0	0	0	0	0	0	0	0	0	0	0	0	0	0	0
09:45 AM	0	0	0	0	0	0	0	0	0	0	0	0	0	0	0	0	0	0	0	0	0
Total	0	0	0	0	0	0	0	0	0	0	0	0	0	0	0	0	0	0	0	0	0
10:00 AM	0	0	0	0	0	0	0	0	0	0	0	0	0	0	0	0	0	0	0	0	0
10:15 AM	0	0	0	0	0	0	0	0	0	0	0	0	0	0	0	0	0	0	0	0	0
10:30 AM	0	0	0	0	0	0	0	0	0	0	0	0	0	0	0	0	0	0	0	0	0
10:45 AM	0	0	0	0	0	0	0	0	0	0	0	0	0	0	0	0	0	0	0	0	0
Total	0	0	0	0	0	0	0	0	0	0	0	0	0	0	0	0	0	0	0	0	0
11:00 AM	0	0	0	0	0	0	0	0	0	0	0	0	0	0	0	0	0	0	0	0	0
11:15 AM	0	0	0	0	0	0	0	0	0	0	0	0	0	0	0	0	0	0	0	0	0
11:30 AM	0	0	0	0	0	0	0	0	0	0	0	0	0	0	0	0	0	0	0	0	0
11:45 AM	0	0	0	0	0	0	0	0	0	0	0	0	0	0	0	0	0	0	0	0	0
Total	0	0	0	0	0	0	0	0	0	0	0	0	0	0	0	0	0	0	0	0	0
12:00 PM	0	0	0	0	0	0	0	0	0	0	0	0	0	0	0	0	0	0	0	0	0
12:15 PM	0	0	0	0	0	0	0	0	0	0	0	0	0	0	0	0	0	0	0	0	0
12:30 PM	0	0	0	0	0	0	0	0	0	0	0	0	0	0	0	0	0	0	0	0	0
12:45 PM	0	0	0	0	0	0	0	0	0	0	0	0	0	0	0	0	0	0	0	0	0
Total	0	0	0	0	0	0	0	0	0	0	0	0	0	0	0	0	0	0	0	0	0
01:00 PM	0	0	0	0	0	0	0	0	0	0	0	0	0	0	0	0	0	0	0	0	0
01:15 PM	0	0	0	0	0	0	0	0	0	0	0	0	0	0	0	0	0	0	0	0	0
01:30 PM	0	0	0	0	0	0	0	0	0	0	0	0	0	0	0	0	0	0	0	0	0
01:45 PM	0	0	0	0	0	0	0	0	0	0	0	0	0	0	0	0	0	0	0	0	0
Total	0	0	0	0	0	0	0	0	0	0	0	0	0	0	0	0	0	0	0	0	0
02:00 PM	0	0	0	0	0	0	0	0	0	0	0	0	0	0	0	0	0	0	0	0	0
02:15 PM	0	0	0	0	0	0	0	0	0	0	0	0	0	0	0	0	0	0	0	0	0
02:30 PM	0	0	0	0	0	0	0	0	0	0	0	0	0	0	0	0	0	0	0	0	0
02:45 PM	0	0	0	0	0	0	0	0	0	0	0	0	0	0	0	0	0	0	0	0	0
Total	0	0	0	0	0	0	0	0	0	0	0	0	0	0	0	0	0	0	0	0	0
03:00 PM	0	0	0	0	0	0	0	0	0	0	0	0	0	0	0	0	0	0	0	0	0
03:15 PM	0	0	0	0	0	0	0	0	0	0	0	0	0	0	0	0	0	0	0	0	0
03:30 PM	0	0	0	0	0	0	0	0	0	0	0	0	0	0	0	0	0	0	0	0	0

DocuSign Envelope ID: 5C03745C-4B01-4834-A65D-B77F558A4F46

Quality Counts

920 Blairhill Rd, Ste B-106
Charlotte, NC 28217

File Name : 15411705 - Brevard Rd -- Ingles_Outlet Mall Entrance
Site Code : 15411705
Start Date : 4/20/2021

Groups Printed- Classes 11, 12, 13

	Brevard Rd Southbound					Outlet Mall Entrance Westbound					Brevard Rd Northbound					Ingles Entrance Eastbound					
Start Time	Left	Thru	Right	U-Turn	App. Total	Left	Thru	Right	U-Turn	App. Total	Left	Thru	Right	U-Turn	App. Total	Left	Thru	Right	U-Turn	App. Total	Int. Total
03:45 PM	0	0	0	0	0	0	0	0	0	0	0	0	0	0	0	0	0	0	0	0	0
Total	0	0	0	0	0	0	0	0	0	0	0	0	0	0	0	0	0	0	0	0	0
04:00 PM	0	0	0	0	0	0	0	0	0	0	0	0	0	0	0	0	0	0	0	0	0
04:15 PM	0	0	0	0	0	0	0	0	0	0	0	0	0	0	0	0	0	0	0	0	0
04:30 PM	0	0	0	0	0	0	0	0	0	0	0	0	0	0	0	0	0	0	0	0	0
04:45 PM	0	0	0	0	0	0	0	0	0	0	0	0	0	0	0	0	0	0	0	0	0
Total	0	0	0	0	0	0	0	0	0	0	0	0	0	0	0	0	0	0	0	0	0
05:00 PM	0	0	0	0	0	0	0	0	0	0	0	0	0	0	0	0	0	0	0	0	0
05:15 PM	0	0	0	0	0	0	0	0	0	0	0	0	0	0	0	0	0	0	0	0	0
05:30 PM	0	0	0	0	0	0	0	0	0	0	0	0	0	0	0	0	0	0	0	0	0
05:45 PM	0	0	0	0	0	0	0	0	0	0	0	0	0	0	0	0	0	0	0	0	0
Total	0	0	0	0	0	0	0	0	0	0	0	0	0	0	0	0	0	0	0	0	0
06:00 PM	0	0	0	0	0	0	0	0	0	0	0	0	0	0	0	0	0	0	0	0	0
06:15 PM	0	0	0	0	0	0	0	0	0	0	0	0	0	0	0	0	0	0	0	0	0
06:30 PM	0	0	0	0	0	0	0	0	0	0	0	0	0	0	0	0	0	0	0	0	0
06:45 PM	0	0	0	0	0	0	0	0	0	0	0	0	0	0	0	0	0	0	0	0	0
Total	0	0	0	0	0	0	0	0	0	0	0	0	0	0	0	0	0	0	0	0	0
Grand Total	0	0	0	0	0	0	0	0	0	0	0	0	0	0	0	0	0	0	0	0	0
Apprch %	0	0	0	0		0	0	0	0		0	0	0	0		0	0	0	0		
Total %																					

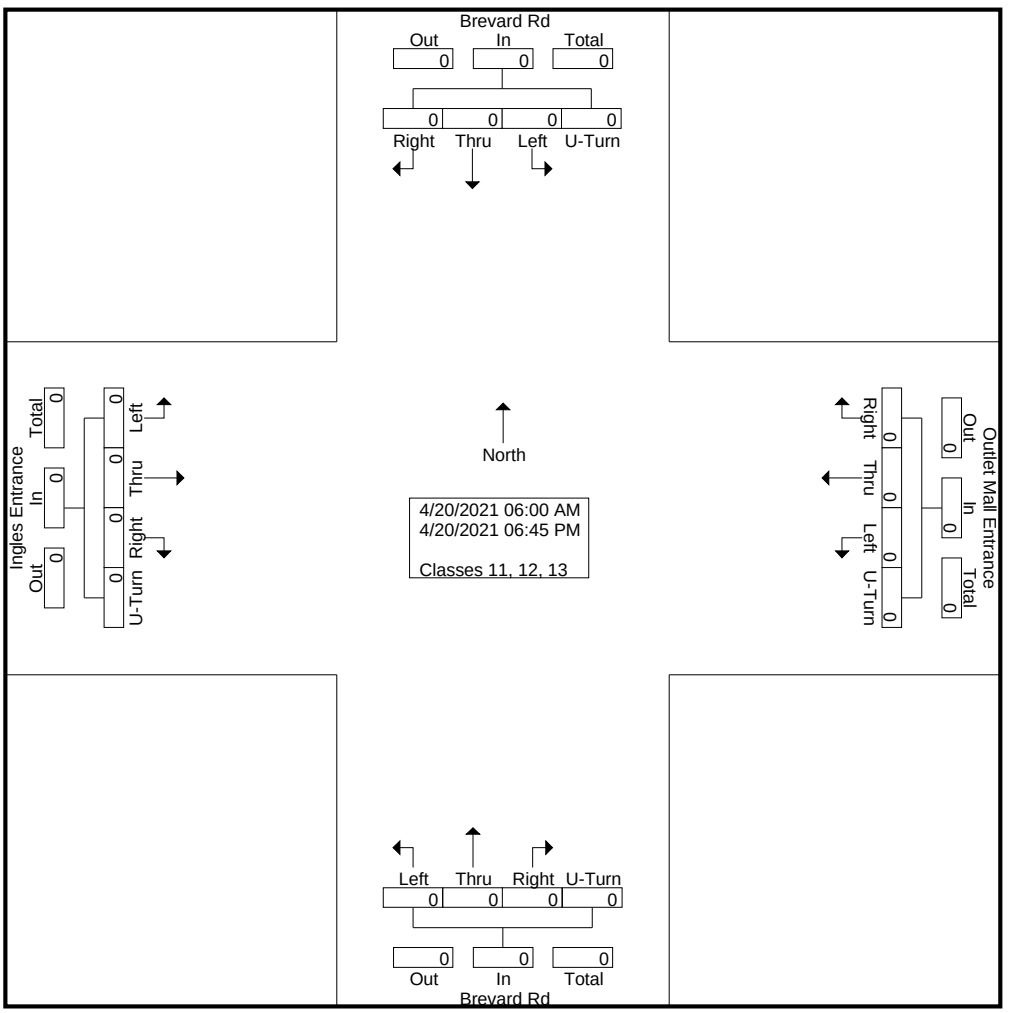

DocuSign Envelope ID: 5C03745C-4B01-4834-A65D-B77F558A4F46

Quality Counts

920 Blairhill Rd, Ste B-106
Charlotte, NC 28217

File Name : 15411705 - Brevard Rd -- Ingles_Outlet Mall Entrance
Site Code : 15411705
Start Date : 4/20/2021

	Brevard Rd Southbound					Outlet Mall Entrance Westbound					Brevard Rd Northbound					Ingles Entrance Eastbound					
Start Time	Left	Thru	Right	U-Turn	App. Total	Left	Thru	Right	U-Turn	App. Total	Left	Thru	Right	U-Turn	App. Total	Left	Thru	Right	U-Turn	App. Total	Int. Total
Peak Hour Analysis From 06:00 AM to 11:45 AM - Peak 1 of 1																					
Peak Hour for Entire Intersection Begins at 06:00 AM																					
06:00 AM	0	0	0	0	0	0	0	0	0	0	0	0	0	0	0	0	0	0	0	0	0
06:15 AM	0	0	0	0	0	0	0	0	0	0	0	0	0	0	0	0	0	0	0	0	0
06:30 AM	0	0	0	0	0	0	0	0	0	0	0	0	0	0	0	0	0	0	0	0	0
06:45 AM	0	0	0	0	0	0	0	0	0	0	0	0	0	0	0	0	0	0	0	0	0
Total Volume	0	0	0	0	0	0	0	0	0	0	0	0	0	0	0	0	0	0	0	0	0
% App. Total	0	0	0	0		0	0	0	0		0	0	0	0		0	0	0	0		
PHF	.000	.000	.000	.000	.000	.000	.000	.000	.000	.000	.000	.000	.000	.000	.000	.000	.000	.000	.000	.000	.000

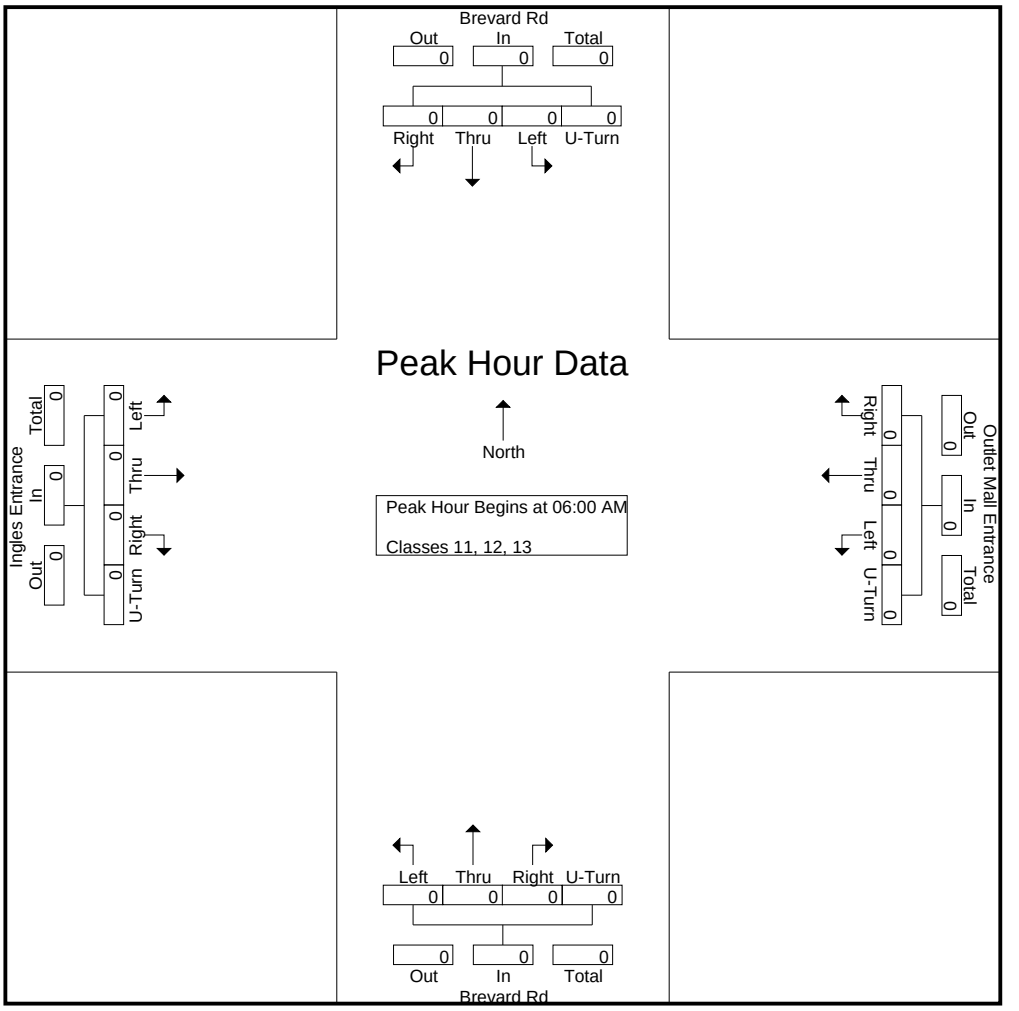

DocuSign Envelope ID: 5C03745C-4B01-4834-A65D-B77F558A4F46

Quality Counts

920 Blairhill Rd, Ste B-106
Charlotte, NC 28217

File Name : 15411705 - Brevard Rd -- Ingles_Outlet Mall Entrance
Site Code : 15411705
Start Date : 4/20/2021

	Brevard Rd Southbound					Outlet Mall Entrance Westbound					Brevard Rd Northbound					Ingles Entrance Eastbound					
Start Time	Left	Thru	Right	U-Turn	App. Total	Left	Thru	Right	U-Turn	App. Total	Left	Thru	Right	U-Turn	App. Total	Left	Thru	Right	U-Turn	App. Total	Int. Total
Peak Hour Analysis From 12:00 PM to 06:45 PM - Peak 1 of 1																					
Peak Hour for Entire Intersection Begins at 12:00 PM																					
12:00 PM	0	0	0	0	0	0	0	0	0	0	0	0	0	0	0	0	0	0	0	0	0
12:15 PM	0	0	0	0	0	0	0	0	0	0	0	0	0	0	0	0	0	0	0	0	0
12:30 PM	0	0	0	0	0	0	0	0	0	0	0	0	0	0	0	0	0	0	0	0	0
12:45 PM	0	0	0	0	0	0	0	0	0	0	0	0	0	0	0	0	0	0	0	0	0
Total Volume	0	0	0	0	0	0	0	0	0	0	0	0	0	0	0	0	0	0	0	0	0
% App. Total	0	0	0	0		0	0	0	0		0	0	0	0		0	0	0	0		
PHF	.000	.000	.000	.000	.000	.000	.000	.000	.000	.000	.000	.000	.000	.000	.000	.000	.000	.000	.000	.000	.000

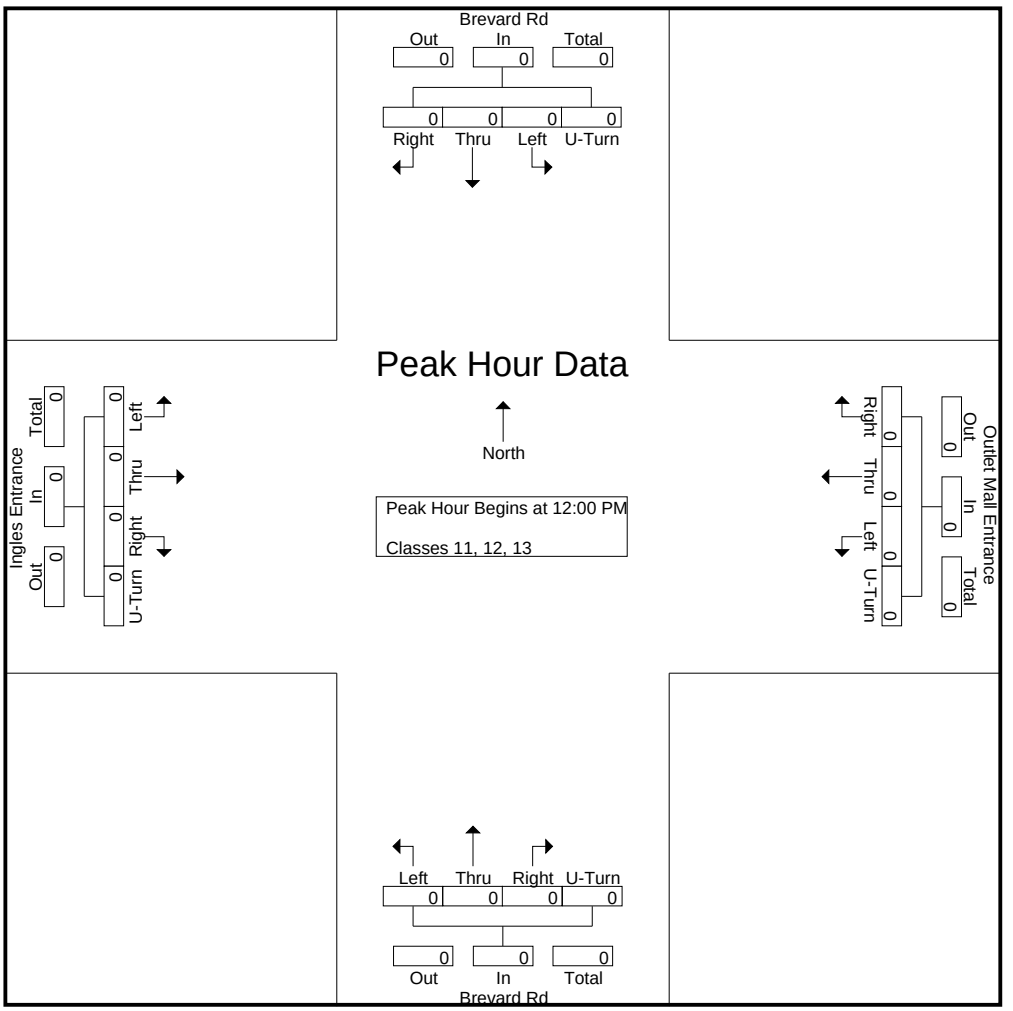

DocuSign Envelope ID: 5C03745C-4B01-4834-A65D-B77F558A4F46

Quality Counts

920 Blairhill Rd, Ste B-106
Charlotte, NC 28217

File Name : 15411705 - Brevard Rd -- Ingles_Outlet Mall Entrance
Site Code : 15411705
Start Date : 4/20/2021
Page No : 1

Groups Printed- Bikes, Peds

	Brevard Rd Southbound					Outlet Mall Entrance Westbound					Brevard Rd Northbound					Ingles Entrance Eastbound					
Start Time	Left	Thru	Right	Peds	App. Total	Left	Thru	Right	Peds	App. Total	Left	Thru	Right	Peds	App. Total	Left	Thru	Right	Peds	App. Total	Int. Total
06:00 AM	0	0	0	0	0	0	0	0	0	0	0	0	0	0	0	0	0	0	0	0	0
06:15 AM	0	0	0	0	0	0	0	0	0	0	0	0	0	0	0	0	0	0	0	0	0
06:30 AM	0	0	0	0	0	0	0	0	0	0	0	0	0	0	0	0	0	0	0	0	0
06:45 AM	0	0	0	0	0	0	0	0	0	0	0	0	0	1	1	0	0	0	0	0	1
Total	0	0	0	0	0	0	0	0	0	0	0	0	0	1	1	0	0	0	0	0	1
07:00 AM	0	0	0	0	0	0	0	0	0	0	0	0	0	0	0	0	0	0	0	0	0
07:15 AM	0	0	0	0	0	0	0	0	0	0	0	0	0	1	1	0	0	0	0	0	1
07:30 AM	0	0	0	0	0	0	0	0	0	0	0	0	0	0	0	0	0	0	0	0	0
07:45 AM	0	0	0	0	0	0	0	0	0	0	0	0	0	0	0	0	0	0	0	0	0
Total	0	0	0	0	0	0	0	0	0	0	0	0	0	1	1	0	0	0	0	0	1
08:00 AM	0	0	0	0	0	0	0	0	0	0	0	0	0	0	0	0	0	0	0	0	0
08:15 AM	0	0	0	0	0	0	0	0	1	1	0	0	0	0	0	0	0	0	0	0	1
08:30 AM	0	0	0	0	0	0	0	0	0	0	0	0	0	0	0	0	0	0	0	0	0
08:45 AM	0	0	0	0	0	0	0	0	0	0	0	0	0	0	0	0	0	0	0	0	0
Total	0	0	0	0	0	0	0	0	1	1	0	0	0	0	0	0	0	0	0	0	1
09:00 AM	0	0	0	0	0	0	0	0	1	1	0	0	0	0	0	0	0	0	0	0	1
09:15 AM	0	0	0	0	0	0	0	0	0	0	0	0	0	0	0	0	0	0	0	0	0
09:30 AM	0	1	0	0	1	0	0	0	1	1	0	0	0	0	0	0	0	0	0	0	2
09:45 AM	0	0	0	0	0	0	0	0	0	0	0	0	0	0	0	0	0	0	3	3	3
Total	0	1	0	0	1	0	0	0	2	2	0	0	0	0	0	0	0	0	3	3	6
10:00 AM	0	0	0	0	0	0	0	0	0	0	0	0	0	2	2	0	0	0	5	5	7
10:15 AM	0	0	0	0	0	0	0	0	0	0	0	0	0	0	0	0	0	0	0	0	0
10:30 AM	0	0	0	0	0	0	0	0	0	0	0	0	0	0	0	0	0	0	1	1	1
10:45 AM	0	0	0	1	1	0	0	0	0	0	0	0	0	0	0	0	0	0	0	0	1
Total	0	0	0	1	1	0	0	0	0	0	0	0	0	2	2	0	0	0	6	6	9
11:00 AM	0	0	0	1	1	0	0	0	0	0	0	0	0	0	0	0	0	0	1	1	2
11:15 AM	0	0	0	2	2	0	0	0	1	1	0	0	0	0	0	0	0	0	0	0	3
11:30 AM	0	1	0	0	1	0	0	0	0	0	0	0	0	0	0	0	0	0	0	0	1
11:45 AM	0	0	0	0	0	0	0	0	0	0	0	0	0	0	0	0	0	0	0	0	0
Total	0	1	0	3	4	0	0	0	1	1	0	0	0	0	0	0	0	0	1	1	6
12:00 PM	0	0	0	0	0	0	0	0	0	0	0	0	0	0	0	0	0	0	0	0	0
12:15 PM	0	0	0	0	0	0	0	0	0	0	0	0	0	0	0	0	0	0	0	0	0
12:30 PM	0	0	0	0	0	0	0	0	0	0	0	0	0	0	0	0	0	0	0	0	0
12:45 PM	0	0	0	0	0	0	0	0	0	0	0	1	0	1	2	0	0	0	0	0	2
Total	0	0	0	0	0	0	0	0	0	0	0	1	0	1	2	0	0	0	0	0	2
01:00 PM	0	0	0	0	0	0	0	0	0	0	0	0	0	3	3	0	0	0	1	1	4
01:15 PM	0	0	0	2	2	0	0	0	0	0	0	0	0	0	0	0	0	0	2	2	4
01:30 PM	0	0	0	0	0	0	0	0	0	0	0	0	0	0	0	0	0	0	0	0	0
01:45 PM	0	0	0	0	0	0	0	0	0	0	0	0	0	0	0	0	0	0	0	0	0
Total	0	0	0	2	2	0	0	0	0	0	0	0	0	3	3	0	0	0	3	3	8
02:00 PM	0	0	0	0	0	0	0	0	0	0	0	0	0	0	0	0	0	0	0	0	0
02:15 PM	0	0	0	0	0	0	0	0	0	0	0	0	0	4	4	0	0	0	3	3	7
02:30 PM	0	0	0	0	0	0	0	0	1	1	0	0	0	0	0	0	0	0	0	0	1
02:45 PM	0	0	0	0	0	0	0	0	0	0	0	0	0	0	0	0	0	0	0	0	0
Total	0	0	0	0	0	0	0	0	1	1	0	0	0	4	4	0	0	0	3	3	8
03:00 PM	0	0	0	0	0	0	0	0	0	0	0	0	0	3	3	0	0	0	3	3	6
03:15 PM	0	0	0	0	0	0	0	0	0	0	0	0	0	0	0	0	0	0	0	0	0
03:30 PM	0	0	0	0	0	0	0	0	0	0	0	0	0	1	1	0	0	0	0	0	1

DocuSign Envelope ID: 5C03745C-4B01-4834-A65D-B77F558A4F46

Quality Counts

920 Blairhill Rd, Ste B-106
Charlotte, NC 28217

File Name : 15411705 - Brevard Rd -- Ingles_Outlet Mall Entrance
Site Code : 15411705
Start Date : 4/20/2021

Groups Printed- Bikes, Peds

	Brevard Rd Southbound					Outlet Mall Entrance Westbound					Brevard Rd Northbound					Ingles Entrance Eastbound					
Start Time	Left	Thru	Right	Peds	App. Total	Left	Thru	Right	Peds	App. Total	Left	Thru	Right	Peds	App. Total	Left	Thru	Right	Peds	App. Total	Int. Total
03:45 PM	0	0	0	0	0	0	0	0	0	0	0	0	0	0	0	0	0	0	0	0	0
Total	0	0	0	0	0	0	0	0	0	0	0	0	0	4	4	0	0	0	3	3	7
04:00 PM	0	0	0	0	0	0	0	0	0	0	0	0	0	0	0	0	0	0	0	0	0
04:15 PM	0	0	0	0	0	0	0	0	0	0	0	1	0	0	1	0	0	0	0	0	1
04:30 PM	0	0	0	1	1	0	0	0	0	0	0	0	0	0	0	0	0	0	1	1	2
04:45 PM	0	0	0	0	0	0	0	0	0	0	0	0	0	0	0	0	0	0	1	1	1
Total	0	0	0	1	1	0	0	0	0	0	0	1	0	0	1	0	0	0	2	2	4
05:00 PM	0	0	0	0	0	0	0	0	0	0	0	0	0	0	0	0	0	0	0	0	0
05:15 PM	0	0	0	0	0	0	0	0	0	0	0	0	0	0	0	0	0	0	2	2	2
05:30 PM	0	0	0	0	0	0	0	1	0	1	0	0	0	0	0	0	0	0	0	0	1
05:45 PM	0	0	0	0	0	0	0	0	0	0	0	0	0	1	1	0	0	0	0	0	1
Total	0	0	0	0	0	0	0	1	0	1	0	0	0	1	1	0	0	0	2	2	4
06:00 PM	0	0	0	0	0	0	0	0	0	0	0	1	0	0	1	0	0	0	0	0	1
06:15 PM	0	0	0	0	0	0	0	0	0	0	0	0	0	0	0	0	0	0	0	0	0
06:30 PM	0	0	0	0	0	0	0	0	0	0	0	0	0	0	0	0	0	0	2	2	2
06:45 PM	0	0	0	1	1	0	0	0	0	0	0	0	0	2	2	0	0	0	3	3	6
Total	0	0	0	1	1	0	0	0	0	0	0	1	0	2	3	0	0	0	5	5	9
Grand Total	0	2	0	8	10	0	0	1	5	6	0	3	0	19	22	0	0	0	28	28	66
Apprch %	0	20	0	80		0	0	16.7	83.3		0	13.6	0	86.4		0	0	0	100		
Total %	0	3	0	12.1	15.2	0	0	1.5	7.6	9.1	0	4.5	0	28.8	33.3	0	0	0	42.4	42.4	

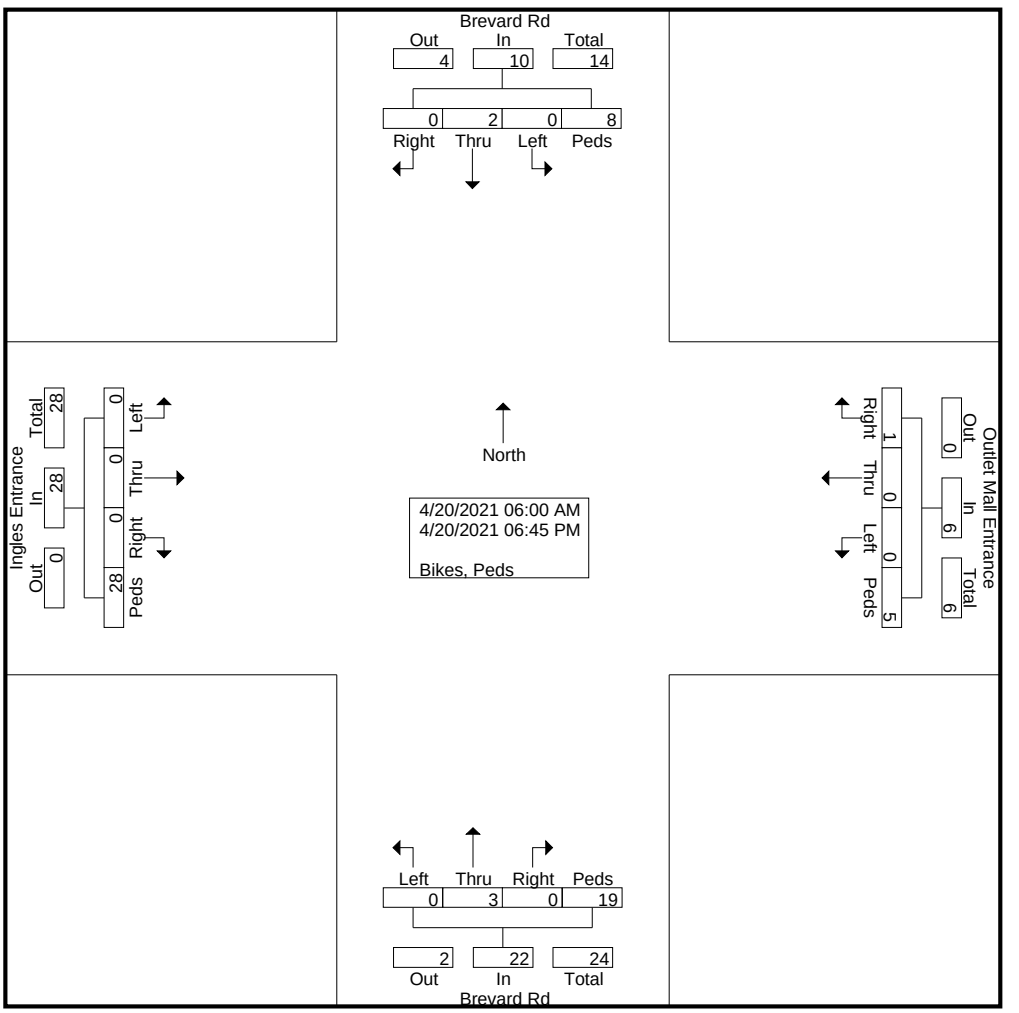

DocuSign Envelope ID: 5C03745C-4B01-4834-A65D-B77F558A4F46

Quality Counts

920 Blairhill Rd, Ste B-106
Charlotte, NC 28217

File Name : 15411705 - Brevard Rd -- Ingles_Outlet Mall Entrance
Site Code : 15411705
Start Date : 4/20/2021

	Brevard Rd Southbound					Outlet Mall Entrance Westbound					Brevard Rd Northbound					Ingles Entrance Eastbound					
Start Time	Left	Thru	Right	Peds	App. Total	Left	Thru	Right	Peds	App. Total	Left	Thru	Right	Peds	App. Total	Left	Thru	Right	Peds	App. Total	Int. Total
Peak Hour Analysis From 06:00 AM to 11:45 AM - Peak 1 of 1																					
Peak Hour for Entire Intersection Begins at 09:15 AM																					
09:15 AM	0	0	0	0	0	0	0	0	0	0	0	0	0	0	0	0	0	0	0	0	0
09:30 AM	0	**1**	0	0	**1**	0	0	0	**1**	**1**	0	0	0	0	0	0	0	0	0	0	2
09:45 AM	0	0	0	0	0	0	0	0	0	0	0	0	0	0	0	0	0	0	3	3	3
10:00 AM	0	0	0	0	0	0	0	0	0	0	0	0	0	**2**	**2**	0	0	0	**5**	**5**	**7**
Total Volume	0	1	0	0	1	0	0	0	1	1	0	0	0	2	2	0	0	0	8	8	12
% App. Total	0	100	0	0		0	0	0	100		0	0	0	100		0	0	0	100		
PHF	.000	.250	.000	.000	.250	.000	.000	.000	.250	.250	.000	.000	.000	.250	.250	.000	.000	.000	.400	.400	.429

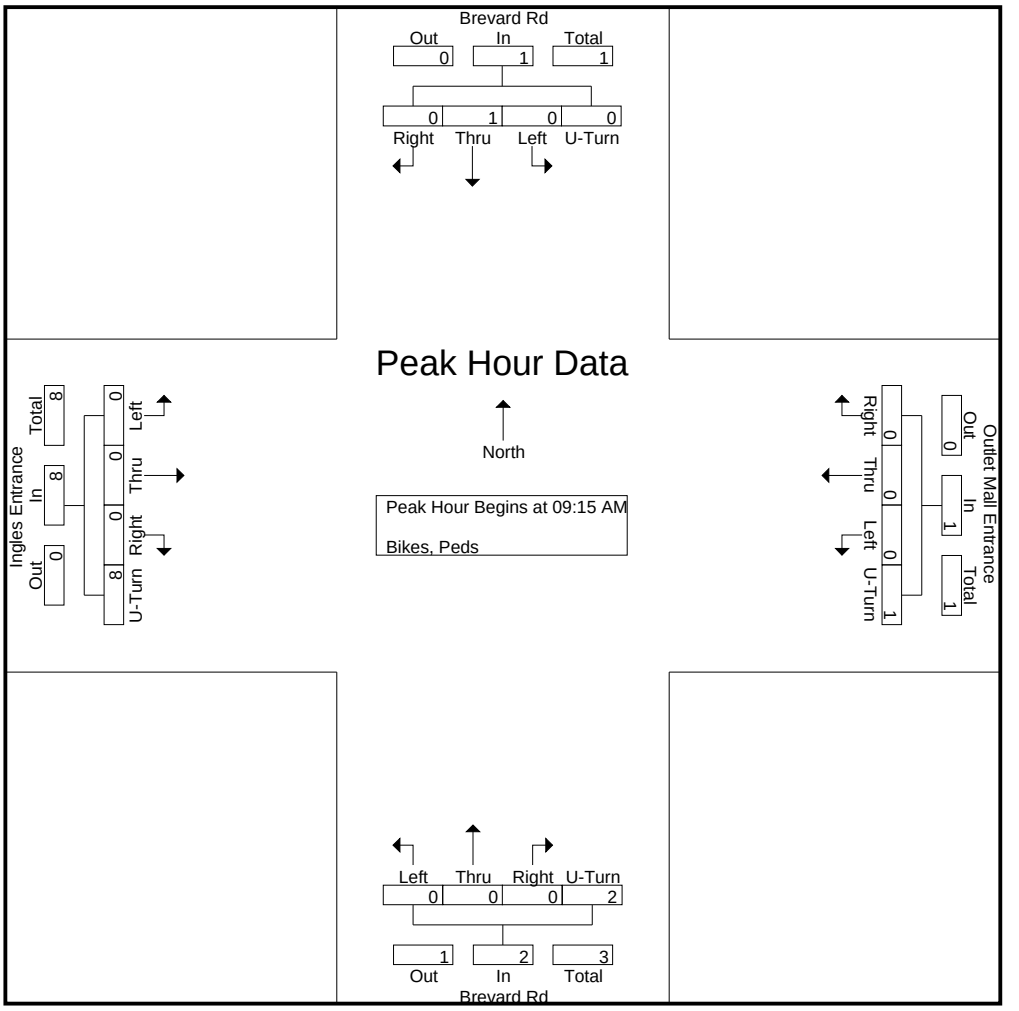

DocuSign Envelope ID: 5C03745C-4B01-4834-A65D-B77F558A4F46

Quality Counts

920 Blairhill Rd, Ste B-106
Charlotte, NC 28217

File Name : 15411705 - Brevard Rd -- Ingles_Outlet Mall Entrance
Site Code : 15411705
Start Date : 4/20/2021

	Brevard Rd Southbound					Outlet Mall Entrance Westbound					Brevard Rd Northbound					Ingles Entrance Eastbound					
Start Time	Left	Thru	Right	Peds	App. Total	Left	Thru	Right	Peds	App. Total	Left	Thru	Right	Peds	App. Total	Left	Thru	Right	Peds	App. Total	Int. Total
Peak Hour Analysis From 12:00 PM to 06:45 PM - Peak 1 of 1																					
Peak Hour for Entire Intersection Begins at 02:15 PM																					
02:15 PM	0	0	0	0	0	0	0	0	0	0	0	0	0	**4**	**4**	0	0	0	**3**	**3**	**7**
02:30 PM	0	0	0	0	0	0	0	0	**1**	**1**	0	0	0	0	0	0	0	0	0	0	1
02:45 PM	0	0	0	0	0	0	0	0	0	0	0	0	0	0	0	0	0	0	0	0	0
03:00 PM	0	0	0	0	0	0	0	0	0	0	0	0	0	3	3	0	0	0	3	3	6
Total Volume	0	0	0	0	0	0	0	0	1	1	0	0	0	7	7	0	0	0	6	6	14
% App. Total	0	0	0	0		0	0	0	100		0	0	0	100		0	0	0	100		
PHF	.000	.000	.000	.000	.000	.000	.000	.000	.250	.250	.000	.000	.000	.438	.438	.000	.000	.000	.500	.500	.500

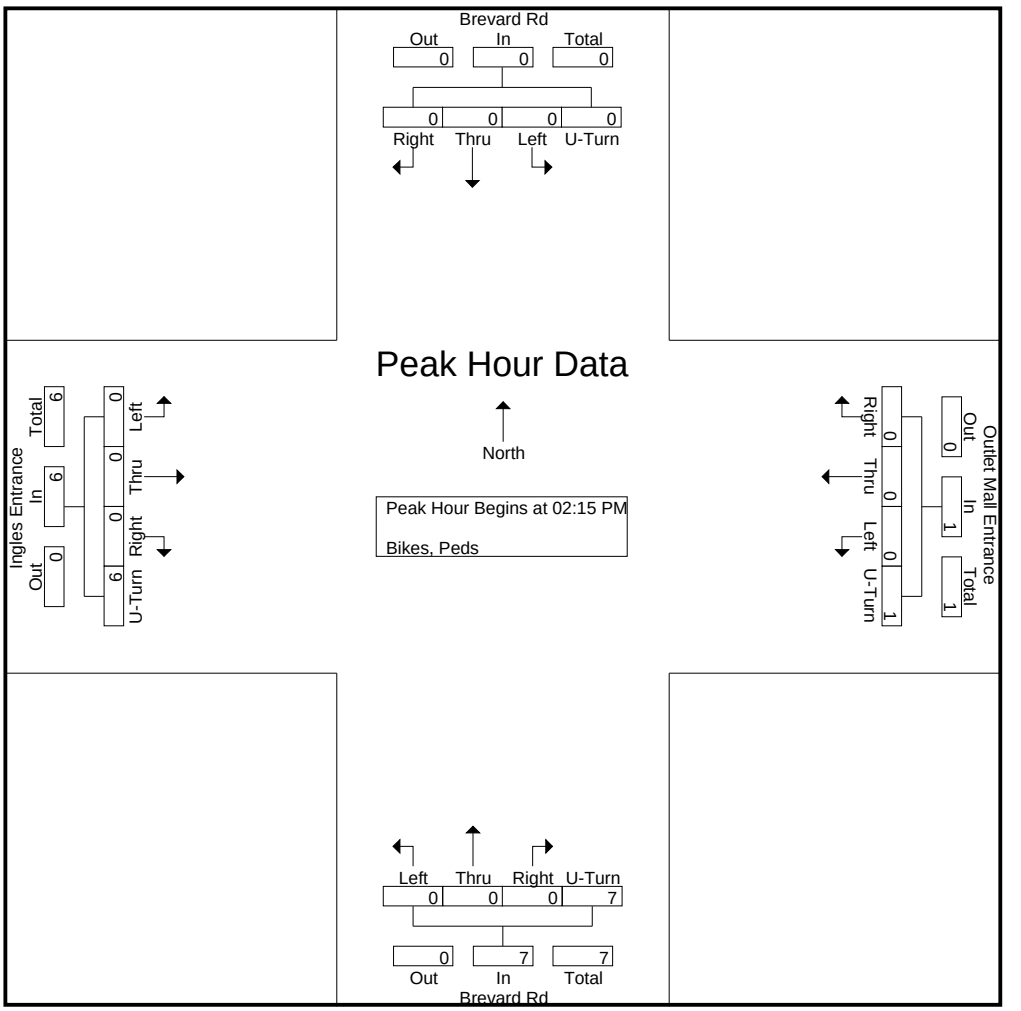

DocuSign Envelope ID: 5C03745C-4B01-4834-A65D-B77F558A4F46

QUALITY COUNTS LLC
920 Blairhill Rd, Suite 106, Charlotte, NC 28217
704.215.4616

Count Number: 15411706
County: Buncombe
City: Asheville
Division: 13

Location: Brevard Rd & Sardis Rd/Ridgefield Blvd
General Location Type: Intersection
Count Type: Turning Movement (Classification)
Count Start Date: 4/20/2021
Time: 6:00 AM – 7:00 PM
Volume: 30,785

Maximum Temperature: 69° F
Minimum Temperature: 40° F
Precipitation: 0.00 in
Snowfall: 0.0 in
Average Sky Cover: 0.2
Weather Conditions: Clear

1. **School in Session:** Yes
2. **Pedestrians Counted**: Yes
3. **Disabled Pedestrians Present**: No
   Description and Approaches Used: N/A
4. **Counted By**: Nicholas McIntosh
5. **Data Processor**: Jon B
6. **Signal Inventory**: N/A
7. **Data Collection Method**: Video/Count Board
8. **Equipment Operating Properly**: Yes
9. **Area Lighting Present**: Yes
10. **Nearest Roadway Stop Sign < 300 ft:** No
    If yes, list approaches: N/A
11. **Nearest Traffic Signal < 300 ft:** No
    If yes, list approaches: N/A
12. **At-Grade Railroad Crossing Present (<200 ft):** No
    If yes, list approaches & distance: N/A
13. **Other:**

↑ North



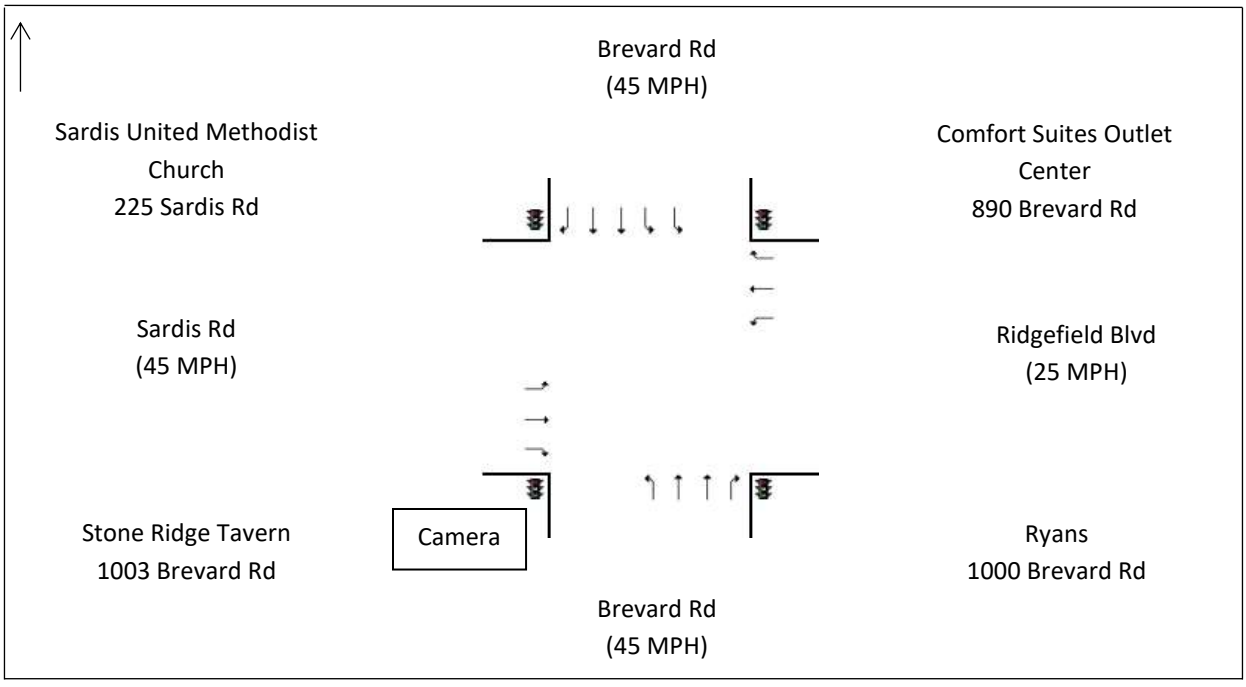

DocuSign Envelope ID: 5C03745C-4B01-4834-A65D-B77F558A4F46

Quality Counts

920 Blairhill Rd, Ste B-106
Charlotte, NC 28217

File Name : 15411706 - Brevard Rd -- Sardis Rd_Ridgefield Blvd
Site Code : 15411706
Start Date : 4/20/2021
Page No : 1

Groups Printed- Classes 1, 2, 3 - Classes 4, 5, 6, 7 - Classes 8, 9, 10 - Classes 11, 12, 13

	Brevard Rd Southbound					Ridgefield Blvd Westbound					Brevard Rd Northbound					Sardis Rd Eastbound					
Start Time	Left	Thru	Right	U-Turn	App. Total	Left	Thru	Right	U-Turn	App. Total	Left	Thru	Right	U-Turn	App. Total	Left	Thru	Right	U-Turn	App. Total	Int. Total
06:00 AM	3	32	24	0	59	2	1	4	0	7	16	27	0	0	43	16	1	28	0	45	154
06:15 AM	4	39	32	0	75	2	1	0	0	3	24	39	0	0	63	22	3	54	0	79	220
06:30 AM	13	65	47	0	125	2	4	0	0	6	38	55	0	0	93	45	6	73	0	124	348
06:45 AM	9	110	38	0	157	3	2	3	0	8	35	80	3	0	118	35	12	76	0	123	406
Total	29	246	141	0	416	9	8	7	0	24	113	201	3	0	317	118	22	231	0	371	1128
07:00 AM	12	72	47	0	131	4	3	4	0	11	53	85	4	0	142	68	6	82	0	156	440
07:15 AM	18	72	59	1	150	0	5	11	0	16	75	118	5	0	198	57	8	87	0	152	516
07:30 AM	38	100	57	0	195	4	6	4	0	14	55	129	4	0	188	68	10	85	0	163	560
07:45 AM	41	107	96	1	245	5	6	7	0	18	70	136	8	0	214	87	12	76	0	175	652
Total	109	351	259	2	721	13	20	26	0	59	253	468	21	0	742	280	36	330	0	646	2168
08:00 AM	26	94	86	0	206	5	3	5	1	14	67	126	8	0	201	82	16	66	0	164	585
08:15 AM	42	113	72	0	227	7	5	3	0	15	51	105	9	0	165	83	18	72	0	173	580
08:30 AM	45	84	36	0	165	7	7	6	0	20	47	109	6	0	162	67	20	94	0	181	528
08:45 AM	22	102	43	1	168	7	4	11	0	22	50	97	4	0	151	55	11	95	0	161	502
Total	135	393	237	1	766	26	19	25	1	71	215	437	27	0	679	287	65	327	0	679	2195
09:00 AM	15	89	45	0	149	7	4	9	0	20	37	85	18	0	140	54	7	64	0	125	434
09:15 AM	27	92	38	0	157	13	4	20	0	37	41	78	8	0	127	39	6	59	0	104	425
09:30 AM	20	89	47	0	156	6	7	16	0	29	41	104	6	1	152	54	8	60	0	122	459
09:45 AM	24	99	41	0	164	9	6	13	0	28	62	74	14	0	150	52	16	62	0	130	472
Total	86	369	171	0	626	35	21	58	0	114	181	341	46	1	569	199	37	245	0	481	1790
10:00 AM	20	101	43	0	164	7	6	15	0	28	39	99	11	0	149	38	10	43	0	91	432
10:15 AM	19	97	51	2	169	7	6	22	0	35	45	87	9	0	141	51	16	62	0	129	474
10:30 AM	26	119	41	0	186	11	18	22	0	51	43	105	11	0	159	42	12	69	0	123	519
10:45 AM	29	109	50	1	189	12	8	15	0	35	61	109	18	0	188	36	21	60	0	117	529
Total	94	426	185	3	708	37	38	74	0	149	188	400	49	0	637	167	59	234	0	460	1954
11:00 AM	20	104	52	1	177	9	17	24	0	50	55	100	14	0	169	47	15	61	0	123	519
11:15 AM	24	105	45	1	175	15	17	23	0	55	49	121	11	0	181	41	10	59	0	110	521
11:30 AM	20	92	50	1	163	20	17	21	0	58	66	97	13	0	176	67	11	67	0	145	542
11:45 AM	24	130	43	0	197	25	8	33	0	66	59	115	13	0	187	52	28	57	0	137	587
Total	88	431	190	3	712	69	59	101	0	229	229	433	51	0	713	207	64	244	0	515	2169
12:00 PM	24	97	54	1	176	35	28	31	0	94	61	118	23	1	203	68	23	84	0	175	648
12:15 PM	25	141	48	1	215	28	24	34	0	86	53	136	21	0	210	48	19	60	0	127	638
12:30 PM	28	137	57	1	223	35	17	35	0	87	67	123	20	0	210	53	24	86	0	163	683
12:45 PM	32	118	61	1	212	22	22	27	0	71	73	142	18	0	233	65	17	70	0	152	668
Total	109	493	220	4	826	120	91	127	0	338	254	519	82	1	856	234	83	300	0	617	2637
01:00 PM	30	114	59	1	204	28	18	42	0	88	56	125	16	0	197	57	29	55	0	141	630
01:15 PM	32	144	57	0	233	24	22	39	0	85	51	124	19	0	194	60	21	43	0	124	636
01:30 PM	33	146	51	1	231	38	26	24	0	88	72	120	16	0	208	44	15	61	0	120	647
01:45 PM	26	118	60	1	205	20	16	18	0	54	67	108	26	0	201	50	20	79	0	149	609
Total	121	522	227	3	873	110	82	123	0	315	246	477	77	0	800	211	85	238	0	534	2522
02:00 PM	23	136	46	0	205	27	17	47	0	91	68	164	15	0	247	47	22	62	0	131	674
02:15 PM	19	128	78	1	226	16	18	28	0	62	87	129	15	0	231	62	18	78	0	158	677
02:30 PM	22	134	64	1	221	22	26	47	0	95	79	150	14	1	244	62	16	83	0	161	721
02:45 PM	18	140	69	0	227	16	31	26	0	73	98	176	10	0	284	50	23	77	0	150	734
Total	82	538	257	2	879	81	92	148	0	321	332	619	54	1	1006	221	79	300	0	600	2806
03:00 PM	26	140	73	0	239	24	24	35	0	83	104	172	17	0	293	60	23	73	0	156	771
03:15 PM	13	164	88	1	266	21	24	34	0	79	96	176	13	0	285	51	8	75	0	134	764
03:30 PM	11	123	64	0	198	16	21	40	0	77	111	157	12	0	280	76	18	58	0	152	707

DocuSign Envelope ID: 5C03745C-4B01-4834-A65D-B77F558A4F46

Quality Counts

920 Blairhill Rd, Ste B-106
Charlotte, NC 28217

File Name : 15411706 - Brevard Rd -- Sardis Rd_Ridgefield Blvd
Site Code : 15411706
Start Date : 4/20/2021
Page No : 2

Groups Printed- Classes 1, 2, 3 - Classes 4, 5, 6, 7 - Classes 8, 9, 10 - Classes 11, 12, 13

	Brevard Rd Southbound					Ridgefield Blvd Westbound					Brevard Rd Northbound					Sardis Rd Eastbound					
Start Time	Left	Thru	Right	U-Turn	App. Total	Left	Thru	Right	U-Turn	App. Total	Left	Thru	Right	U-Turn	App. Total	Left	Thru	Right	U-Turn	App. Total	Int. Total
03:45 PM	18	132	62	0	212	23	25	32	0	80	102	172	11	0	285	74	12	53	0	139	716
Total	68	559	287	1	915	84	94	141	0	319	413	677	53	0	1143	261	61	259	0	581	2958
04:00 PM	16	168	80	0	264	27	19	35	0	81	116	179	7	0	302	69	12	76	0	157	804
04:15 PM	17	166	67	1	251	27	26	39	0	92	117	149	9	0	275	66	16	52	0	134	752
04:30 PM	12	143	69	0	224	29	44	52	0	125	117	185	12	0	314	52	12	91	0	155	818
04:45 PM	16	132	79	0	227	24	29	43	0	96	118	182	13	0	313	65	14	40	0	119	755
Total	61	609	295	1	966	107	118	169	0	394	468	695	41	0	1204	252	54	259	0	565	3129
05:00 PM	14	147	81	0	242	35	47	61	0	143	112	161	17	0	290	65	16	78	0	159	834
05:15 PM	16	144	80	2	242	27	27	48	0	102	111	207	11	0	329	64	12	73	0	149	822
05:30 PM	22	134	90	1	247	26	34	38	0	98	135	174	10	0	319	49	13	74	0	136	800
05:45 PM	16	154	60	1	231	19	21	19	0	59	125	147	11	0	283	59	9	68	0	136	709
Total	68	579	311	4	962	107	129	166	0	402	483	689	49	0	1221	237	50	293	0	580	3165
06:00 PM	15	132	58	1	206	21	21	24	0	66	94	111	17	0	222	45	8	76	0	129	623
06:15 PM	20	104	50	0	174	17	21	13	0	51	81	97	10	0	188	32	11	51	0	94	507
06:30 PM	12	98	52	0	162	16	26	24	0	66	69	107	10	0	186	70	18	59	0	147	561
06:45 PM	4	88	51	0	143	14	15	20	0	49	72	100	11	0	183	44	11	43	0	98	473
Total	51	422	211	1	685	68	83	81	0	232	316	415	48	0	779	191	48	229	0	468	2164
Grand Total	1101	5938	2991	25	10055	866	854	1246	1	2967	3691	6371	601	3	10666	2865	743	3489	0	7097	30785
Apprch %	10.9	59.1	29.7	0.2		29.2	28.8	42	0		34.6	59.7	5.6	0		40.4	10.5	49.2	0		
Total %	3.6	19.3	9.7	0.1	32.7	2.8	2.8	4	0	9.6	12	20.7	2	0	34.6	9.3	2.4	11.3	0	23.1	
Classes 1, 2, 3	1062	5679	2750	25	9516	846	835	1205	0	2886	3461	6075	593	3	10132	2637	726	3278	0	6641	29175
% Classes 1, 2, 3	96.5	95.6	91.9	100	94.6	97.7	97.8	96.7	0	97.3	93.8	95.4	98.7	100	95	92	97.7	94	0	93.6	94.8
Classes 4, 5, 6, 7	30	190	126	0	346	16	11	26	1	54	180	236	3	0	419	142	13	168	0	323	1142
% Classes 4, 5, 6, 7	2.7	3.2	4.2	0	3.4	1.8	1.3	2.1	100	1.8	4.9	3.7	0.5	0	3.9	5	1.7	4.8	0	4.6	3.7
Classes 8, 9, 10	9	69	115	0	193	4	8	15	0	27	50	60	5	0	115	86	4	43	0	133	468
% Classes 8, 9, 10	0.8	1.2	3.8	0	1.9	0.5	0.9	1.2	0	0.9	1.4	0.9	0.8	0	1.1	3	0.5	1.2	0	1.9	1.5
Classes 11, 12, 13	0	0	0	0	0	0	0	0	0	0	0	0	0	0	0	0	0	0	0	0	0
% Classes 11, 12, 13	0	0	0	0	0	0	0	0	0	0	0	0	0	0	0	0	0	0	0	0	0

DocuSign Envelope ID: 5C03745C-4B01-4834-A65D-B77F558A4F46

Quality Counts

920 Blairhill Rd, Ste B-106
Charlotte, NC 28217

File Name : 15411706 - Brevard Rd -- Sardis Rd_Ridgefield Blvd
Site Code : 15411706
Start Date : 4/20/2021
Page No : 3

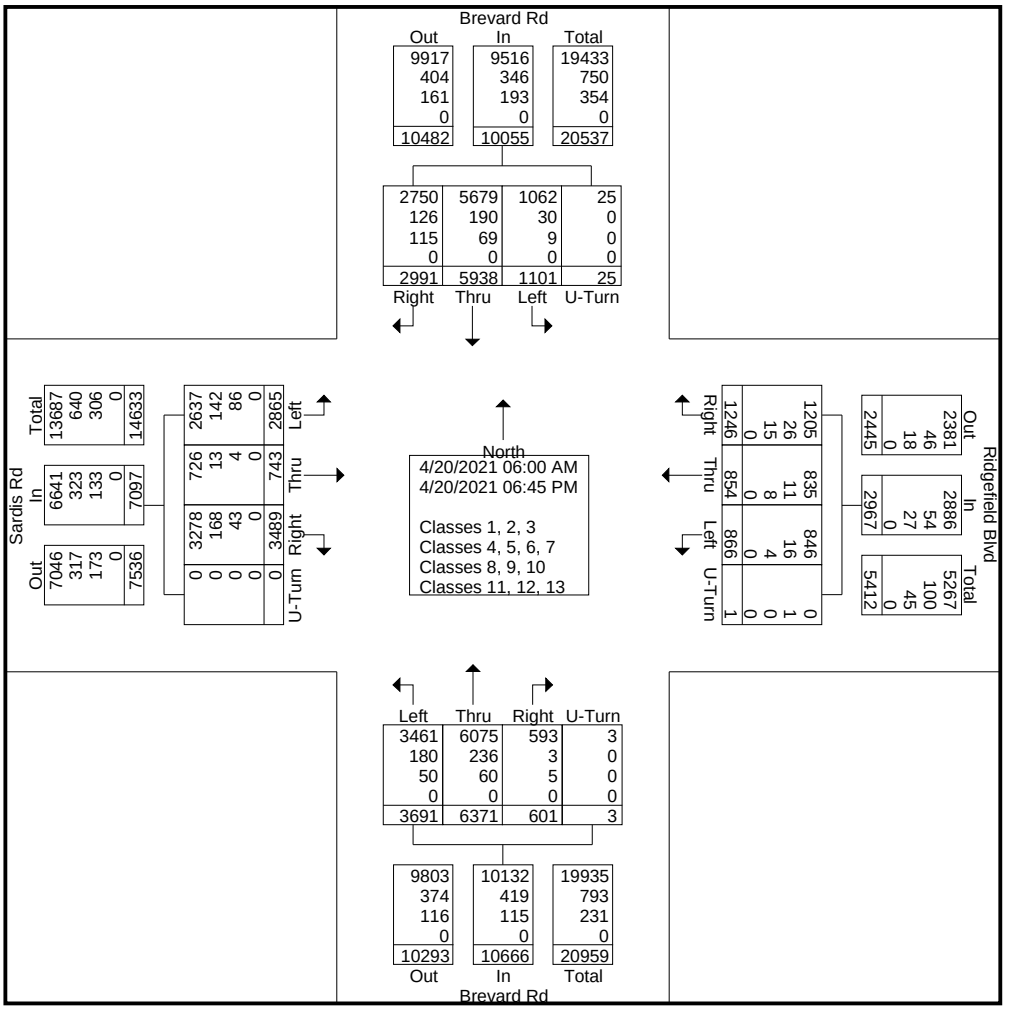

DocuSign Envelope ID: 5C03745C-4B01-4834-A65D-B77F558A4F46

Quality Counts

920 Blairhill Rd, Ste B-106
Charlotte, NC 28217

File Name : 15411706 - Brevard Rd -- Sardis Rd_Ridgefield Blvd
Site Code : 15411706
Start Date : 4/20/2021

	Brevard Rd Southbound					Ridgefield Blvd Westbound					Brevard Rd Northbound					Sardis Rd Eastbound					
Start Time	Left	Thru	Right	U-Turn	App. Total	Left	Thru	Right	U-Turn	App. Total	Left	Thru	Right	U-Turn	App. Total	Left	Thru	Right	U-Turn	App. Total	Int. Total
Peak Hour Analysis From 06:00 AM to 11:45 AM - Peak 1 of 1																					
Peak Hour for Entire Intersection Begins at 07:30 AM																					
07:30 AM	38	100	57	0	195	4	**6**	4	0	14	55	129	4	0	188	68	10	**85**	0	163	560
07:45 AM	41	107	**96**	**1**	**245**	5	6	**7**	0	**18**	**70**	**136**	8	0	**214**	**87**	12	76	0	**175**	**652**
08:00 AM	26	94	86	0	206	5	3	5	**1**	14	67	126	8	0	201	82	16	66	0	164	585
08:15 AM	**42**	**113**	72	0	227	**7**	5	3	0	15	51	105	**9**	0	165	83	**18**	72	0	173	580
Total Volume	147	414	311	1	873	21	20	19	1	61	243	496	29	0	768	320	56	299	0	675	2377
% App. Total	16.8	47.4	35.6	0.1		34.4	32.8	31.1	1.6		31.6	64.6	3.8	0		47.4	8.3	44.3	0		
PHF	.875	.916	.810	.250	.891	.750	.833	.679	.250	.847	.868	.912	.806	.000	.897	.920	.778	.879	.000	.964	.911

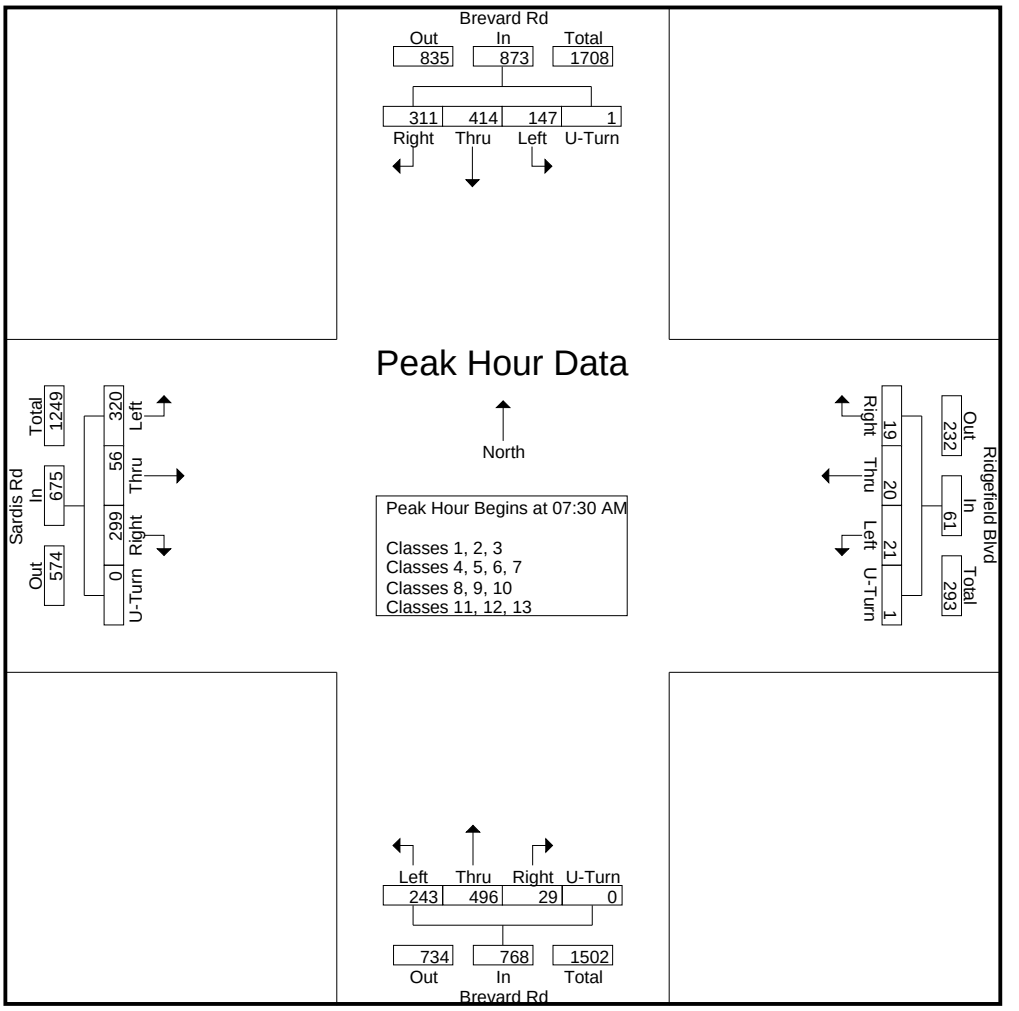

DocuSign Envelope ID: 5C03745C-4B01-4834-A65D-B77F558A4F46

Quality Counts

920 Blairhill Rd, Ste B-106
Charlotte, NC 28217

File Name : 15411706 - Brevard Rd -- Sardis Rd_Ridgefield Blvd
Site Code : 15411706
Start Date : 4/20/2021
Page No : 5

	Brevard Rd Southbound					Ridgefield Blvd Westbound					Brevard Rd Northbound					Sardis Rd Eastbound					
Start Time	Left	Thru	Right	U-Turn	App. Total	Left	Thru	Right	U-Turn	App. Total	Left	Thru	Right	U-Turn	App. Total	Left	Thru	Right	U-Turn	App. Total	Int. Total
Peak Hour Analysis From 12:00 PM to 06:45 PM - Peak 1 of 1																					
Peak Hour for Entire Intersection Begins at 04:30 PM																					
04:30 PM	12	143	69	0	224	29	44	52	0	125	117	185	12	0	314	52	12	**91**	0	155	818
04:45 PM	**16**	132	79	0	227	24	29	43	0	96	**118**	182	13	0	313	**65**	14	40	0	119	755
05:00 PM	14	**147**	**81**	0	**242**	**35**	**47**	**61**	0	**143**	112	161	**17**	0	290	65	**16**	78	0	**159**	**834**
05:15 PM	16	144	80	**2**	242	27	27	48	0	102	111	**207**	11	0	**329**	64	12	73	0	149	822
Total Volume	58	566	309	2	935	115	147	204	0	466	458	735	53	0	1246	246	54	282	0	582	3229
% App. Total	6.2	60.5	33	0.2		24.7	31.5	43.8	0		36.8	59	4.3	0		42.3	9.3	48.5	0		
PHF	.906	.963	.954	.250	.966	.821	.782	.836	.000	.815	.970	.888	.779	.000	.947	.946	.844	.775	.000	.915	.968

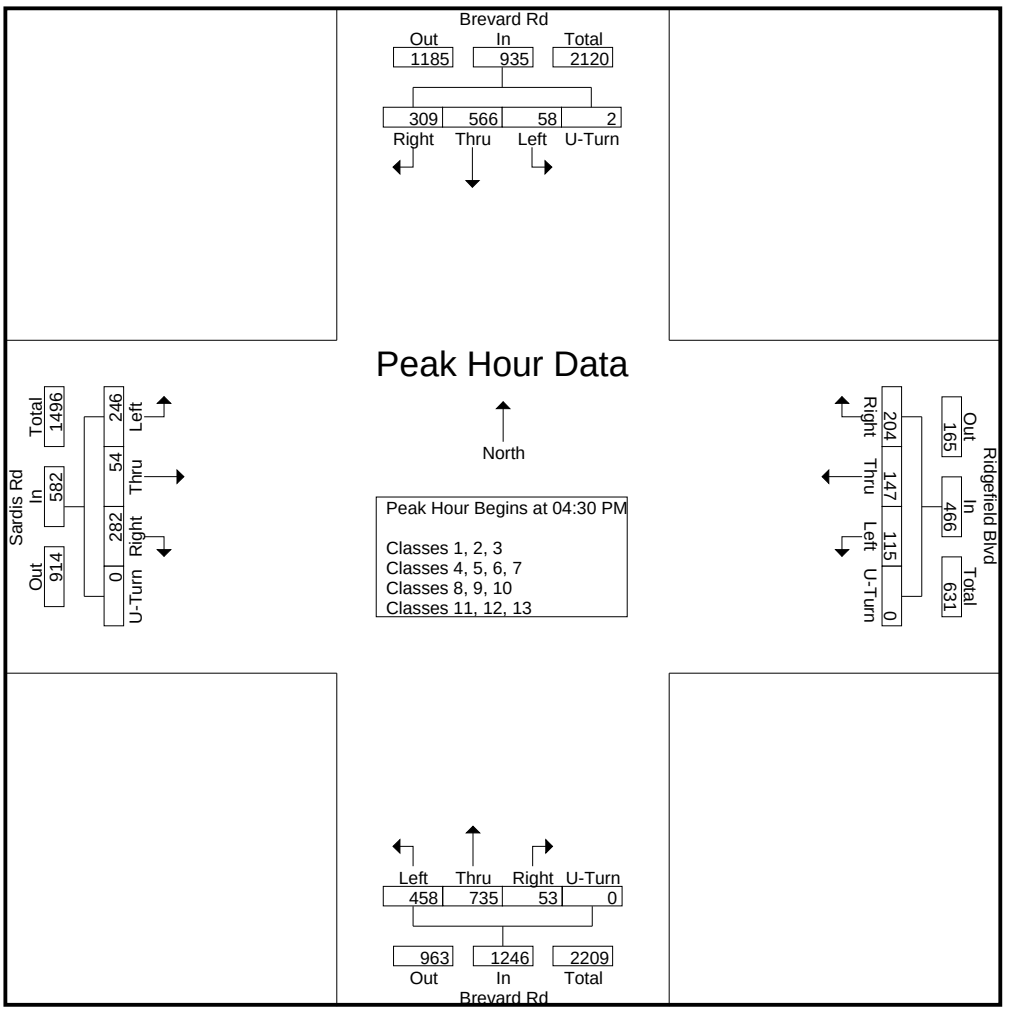

DocuSign Envelope ID: 5C03745C-4B01-4834-A65D-B77F558A4F46

Quality Counts

920 Blairhill Rd, Ste B-106
Charlotte, NC 28217

File Name : 15411706 - Brevard Rd -- Sardis Rd_Ridgefield Blvd
Site Code : 15411706
Start Date : 4/20/2021
Page No : 1

Groups Printed- Classes 1, 2, 3

	Brevard Rd Southbound					Ridgefield Blvd Westbound					Brevard Rd Northbound					Sardis Rd Eastbound					
Start Time	Left	Thru	Right	U-Turn	App. Total	Left	Thru	Right	U-Turn	App. Total	Left	Thru	Right	U-Turn	App. Total	Left	Thru	Right	U-Turn	App. Total	Int. Total
06:00 AM	3	32	23	0	58	2	1	3	0	6	13	24	0	0	37	14	1	27	0	42	143
06:15 AM	4	38	30	0	72	1	1	0	0	2	21	33	0	0	54	21	3	52	0	76	204
06:30 AM	12	65	44	0	121	1	3	0	0	4	37	47	0	0	84	43	6	72	0	121	330
06:45 AM	8	107	34	0	149	2	2	3	0	7	32	71	3	0	106	31	12	72	0	115	377
Total	27	242	131	0	400	6	7	6	0	19	103	175	3	0	281	109	22	223	0	354	1054
07:00 AM	12	68	43	0	123	3	3	3	0	9	48	80	3	0	131	62	6	76	0	144	407
07:15 AM	17	65	57	1	140	0	4	11	0	15	68	117	5	0	190	55	7	85	0	147	492
07:30 AM	38	92	55	0	185	4	4	4	0	12	49	126	4	0	179	59	10	82	0	151	527
07:45 AM	40	101	92	1	234	5	6	7	0	18	65	129	8	0	202	82	12	70	0	164	618
Total	107	326	247	2	682	12	17	25	0	54	230	452	20	0	702	258	35	313	0	606	2044
08:00 AM	26	90	80	0	196	5	3	5	0	13	63	121	8	0	192	74	16	61	0	151	552
08:15 AM	42	108	65	0	215	7	5	3	0	15	48	97	9	0	154	75	17	68	0	160	544
08:30 AM	45	79	32	0	156	7	7	6	0	20	43	107	6	0	156	58	20	87	0	165	497
08:45 AM	21	95	39	1	156	7	4	11	0	22	45	88	4	0	137	52	10	90	0	152	467
Total	134	372	216	1	723	26	19	25	0	70	199	413	27	0	639	259	63	306	0	628	2060
09:00 AM	15	82	36	0	133	7	4	8	0	19	34	80	17	0	131	48	7	59	0	114	397
09:15 AM	26	86	32	0	144	13	4	18	0	35	38	74	8	0	120	34	6	52	0	92	391
09:30 AM	19	83	38	0	140	6	7	15	0	28	38	93	6	1	138	47	8	57	0	112	418
09:45 AM	23	88	37	0	148	8	6	13	0	27	59	68	14	0	141	43	16	56	0	115	431
Total	83	339	143	0	565	34	21	54	0	109	169	315	45	1	530	172	37	224	0	433	1637
10:00 AM	18	97	36	0	151	7	6	14	0	27	34	92	11	0	137	34	9	40	0	83	398
10:15 AM	19	88	43	2	152	7	6	21	0	34	43	82	8	0	133	47	16	62	0	125	444
10:30 AM	25	111	36	0	172	11	18	19	0	48	36	100	10	0	146	37	11	63	0	111	477
10:45 AM	27	102	39	1	169	11	5	14	0	30	52	102	18	0	172	30	20	56	0	106	477
Total	89	398	154	3	644	36	35	68	0	139	165	376	47	0	588	148	56	221	0	425	1796
11:00 AM	20	103	46	1	170	9	17	24	0	50	47	96	14	0	157	42	14	58	0	114	491
11:15 AM	24	99	42	1	166	14	16	23	0	53	45	113	11	0	169	35	10	54	0	99	487
11:30 AM	20	87	44	1	152	20	17	21	0	58	60	90	13	0	163	63	10	64	0	137	510
11:45 AM	22	124	42	0	188	24	8	33	0	65	56	109	13	0	178	39	26	53	0	118	549
Total	86	413	174	3	676	67	58	101	0	226	208	408	51	0	667	179	60	229	0	468	2037
12:00 PM	23	95	46	1	165	34	28	30	0	92	60	112	22	1	195	62	23	80	0	165	617
12:15 PM	24	136	46	1	207	28	24	31	0	83	50	130	21	0	201	46	19	58	0	123	614
12:30 PM	27	133	48	1	209	35	17	32	0	84	64	113	20	0	197	46	23	84	0	153	643
12:45 PM	30	112	58	1	201	22	22	26	0	70	64	139	18	0	221	62	17	67	0	146	638
Total	104	476	198	4	782	119	91	119	0	329	238	494	81	1	814	216	82	289	0	587	2512
01:00 PM	27	103	48	1	179	28	18	38	0	84	53	119	16	0	188	51	29	48	0	128	579
01:15 PM	31	140	50	0	221	21	20	38	0	79	49	122	19	0	190	55	21	41	0	117	607
01:30 PM	31	139	48	1	219	35	24	23	0	82	65	111	16	0	192	37	15	57	0	109	602
01:45 PM	24	116	53	1	194	20	16	18	0	54	64	104	25	0	193	46	20	73	0	139	580
Total	113	498	199	3	813	104	78	117	0	299	231	456	76	0	763	189	85	219	0	493	2368
02:00 PM	22	135	42	0	199	26	17	46	0	89	64	156	15	0	235	41	21	57	0	119	642
02:15 PM	19	123	71	1	214	16	18	28	0	62	85	123	15	0	223	54	18	74	0	146	645
02:30 PM	22	123	59	1	205	21	26	43	0	90	73	145	14	1	233	60	16	80	0	156	684
02:45 PM	18	135	64	0	217	16	30	26	0	72	91	172	10	0	273	48	23	73	0	144	706
Total	81	516	236	2	835	79	91	143	0	313	313	596	54	1	964	203	78	284	0	565	2677
03:00 PM	25	133	71	0	229	24	23	34	0	81	99	167	16	0	282	54	23	68	0	145	737
03:15 PM	12	153	81	1	247	21	24	33	0	78	90	167	13	0	270	50	8	69	0	127	722
03:30 PM	11	116	63	0	190	16	20	39	0	75	104	145	12	0	261	74	17	56	0	147	673

DocuSign Envelope ID: 5C03745C-4B01-4834-A65D-B77F558A4F46

Quality Counts

920 Blairhill Rd, Ste B-106
Charlotte, NC 28217

File Name : 15411706 - Brevard Rd -- Sardis Rd_Ridgefield Blvd
Site Code : 15411706
Start Date : 4/20/2021

Groups Printed- Classes 1, 2, 3

	Brevard Rd Southbound					Ridgefield Blvd Westbound					Brevard Rd Northbound					Sardis Rd Eastbound					
Start Time	Left	Thru	Right	U-Turn	App. Total	Left	Thru	Right	U-Turn	App. Total	Left	Thru	Right	U-Turn	App. Total	Left	Thru	Right	U-Turn	App. Total	Int. Total
03:45 PM	18	122	56	0	196	23	25	31	0	79	100	165	11	0	276	72	12	48	0	132	683
Total	66	524	271	1	862	84	92	137	0	313	393	644	52	0	1089	250	60	241	0	551	2815
04:00 PM	15	160	68	0	243	27	18	34	0	79	112	171	7	0	290	67	12	68	0	147	759
04:15 PM	17	160	63	1	241	26	26	39	0	91	111	142	9	0	262	64	15	44	0	123	717
04:30 PM	11	142	67	0	220	29	43	51	0	123	109	180	11	0	300	47	12	84	0	143	786
04:45 PM	15	130	77	0	222	24	29	42	0	95	110	179	13	0	302	59	13	38	0	110	729
Total	58	592	275	1	926	106	116	166	0	388	442	672	40	0	1154	237	52	234	0	523	2991
05:00 PM	13	144	78	0	235	35	47	61	0	143	107	153	17	0	277	64	15	71	0	150	805
05:15 PM	16	143	78	2	239	27	27	48	0	102	100	198	11	0	309	61	12	68	0	141	791
05:30 PM	21	130	87	1	239	26	34	37	0	97	133	170	10	0	313	49	12	70	0	131	780
05:45 PM	14	151	59	1	225	19	20	19	0	58	121	145	11	0	277	57	9	65	0	131	691
Total	64	568	302	4	938	107	128	165	0	400	461	666	49	0	1176	231	48	274	0	553	3067
06:00 PM	15	130	57	1	203	20	21	23	0	64	88	108	17	0	213	44	8	74	0	126	606
06:15 PM	20	101	46	0	167	16	20	12	0	48	81	95	10	0	186	31	11	48	0	90	491
06:30 PM	12	97	51	0	160	16	26	24	0	66	68	106	10	0	184	69	18	58	0	145	555
06:45 PM	3	87	50	0	140	14	15	20	0	49	72	99	11	0	182	42	11	41	0	94	465
Total	50	415	204	1	670	66	82	79	0	227	309	408	48	0	765	186	48	221	0	455	2117
Grand Total	1062	5679	2750	25	9516	846	835	1205	0	2886	3461	6075	593	3	10132	2637	726	3278	0	6641	29175
Apprch %	11.2	59.7	28.9	0.3		29.3	28.9	41.8	0		34.2	60	5.9	0		39.7	10.9	49.4	0		
Total %	3.6	19.5	9.4	0.1	32.6	2.9	2.9	4.1	0	9.9	11.9	20.8	2	0	34.7	9	2.5	11.2	0	22.8	

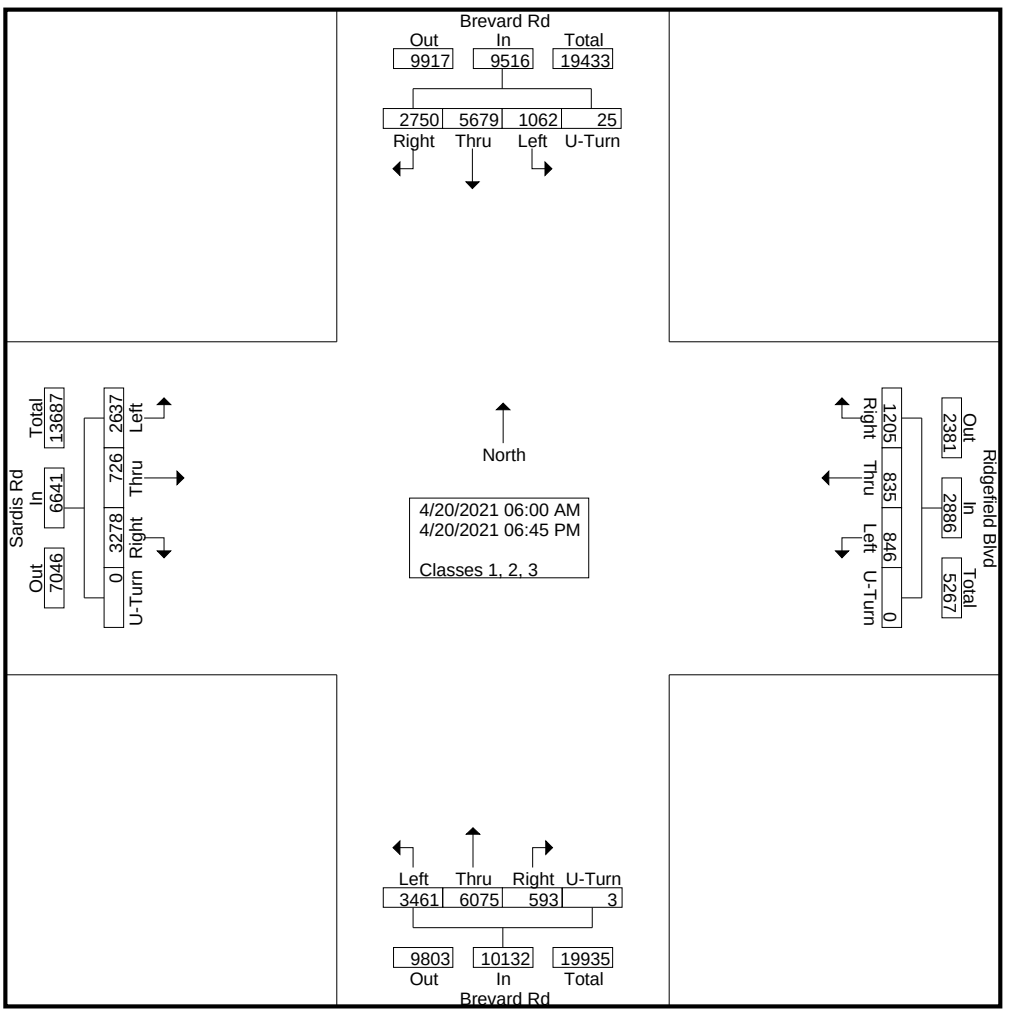

DocuSign Envelope ID: 5C03745C-4B01-4834-A65D-B77F558A4F46

Quality Counts

920 Blairhill Rd, Ste B-106
Charlotte, NC 28217

File Name : 15411706 - Brevard Rd -- Sardis Rd_Ridgefield Blvd
Site Code : 15411706
Start Date : 4/20/2021

	Brevard Rd Southbound					Ridgefield Blvd Westbound					Brevard Rd Northbound					Sardis Rd Eastbound					
Start Time	Left	Thru	Right	U-Turn	App. Total	Left	Thru	Right	U-Turn	App. Total	Left	Thru	Right	U-Turn	App. Total	Left	Thru	Right	U-Turn	App. Total	Int. Total
Peak Hour Analysis From 06:00 AM to 11:45 AM - Peak 1 of 1																					
Peak Hour for Entire Intersection Begins at 07:30 AM																					
07:30 AM	38	92	55	0	185	4	4	4	0	12	49	126	4	0	179	59	10	**82**	0	151	527
07:45 AM	40	101	**92**	**1**	**234**	5	**6**	**7**	0	**18**	**65**	**129**	8	0	**202**	**82**	12	70	0	**164**	**618**
08:00 AM	26	90	80	0	196	5	3	5	0	13	63	121	8	0	192	74	16	61	0	151	552
08:15 AM	**42**	**108**	65	0	215	**7**	5	3	0	15	48	97	**9**	0	154	75	**17**	68	0	160	544
Total Volume	146	391	292	1	830	21	18	19	0	58	225	473	29	0	727	290	55	281	0	626	2241
% App. Total	17.6	47.1	35.2	0.1		36.2	31	32.8	0		30.9	65.1	4	0		46.3	8.8	44.9	0		
PHF	.869	.905	.793	.250	.887	.750	.750	.679	.000	.806	.865	.917	.806	.000	.900	.884	.809	.857	.000	.954	.907

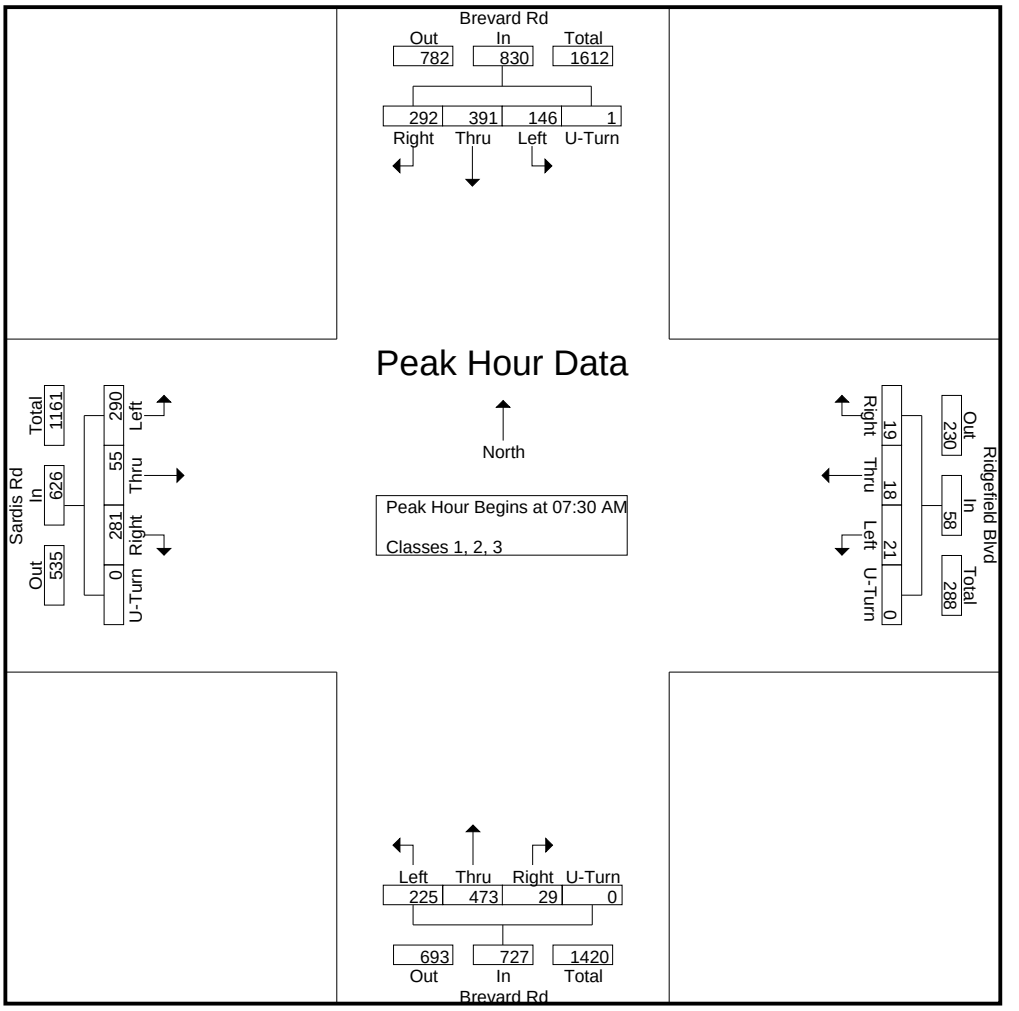

DocuSign Envelope ID: 5C03745C-4B01-4834-A65D-B77F558A4F46

Quality Counts

920 Blairhill Rd, Ste B-106
Charlotte, NC 28217

File Name : 15411706 - Brevard Rd -- Sardis Rd_Ridgefield Blvd
Site Code : 15411706
Start Date : 4/20/2021
Page No : 4

	Brevard Rd Southbound					Ridgefield Blvd Westbound					Brevard Rd Northbound					Sardis Rd Eastbound					
Start Time	Left	Thru	Right	U-Turn	App. Total	Left	Thru	Right	U-Turn	App. Total	Left	Thru	Right	U-Turn	App. Total	Left	Thru	Right	U-Turn	App. Total	Int. Total
Peak Hour Analysis From 12:00 PM to 06:45 PM - Peak 1 of 1																					
Peak Hour for Entire Intersection Begins at 04:30 PM																					
04:30 PM	11	142	67	0	220	29	43	51	0	123	109	180	11	0	300	47	12	**84**	0	143	786
04:45 PM	15	130	77	0	222	24	29	42	0	95	**110**	179	13	0	302	59	13	38	0	110	729
05:00 PM	13	**144**	**78**	0	235	**35**	**47**	**61**	0	**143**	107	153	**17**	0	277	**64**	**15**	71	0	**150**	**805**
05:15 PM	**16**	143	78	**2**	**239**	27	27	48	0	102	100	**198**	11	0	**309**	61	12	68	0	141	791
Total Volume	55	559	300	2	916	115	146	202	0	463	426	710	52	0	1188	231	52	261	0	544	3111
% App. Total	6	61	32.8	0.2		24.8	31.5	43.6	0		35.9	59.8	4.4	0		42.5	9.6	48	0		
PHF	.859	.970	.962	.250	.958	.821	.777	.828	.000	.809	.968	.896	.765	.000	.961	.902	.867	.777	.000	.907	.966

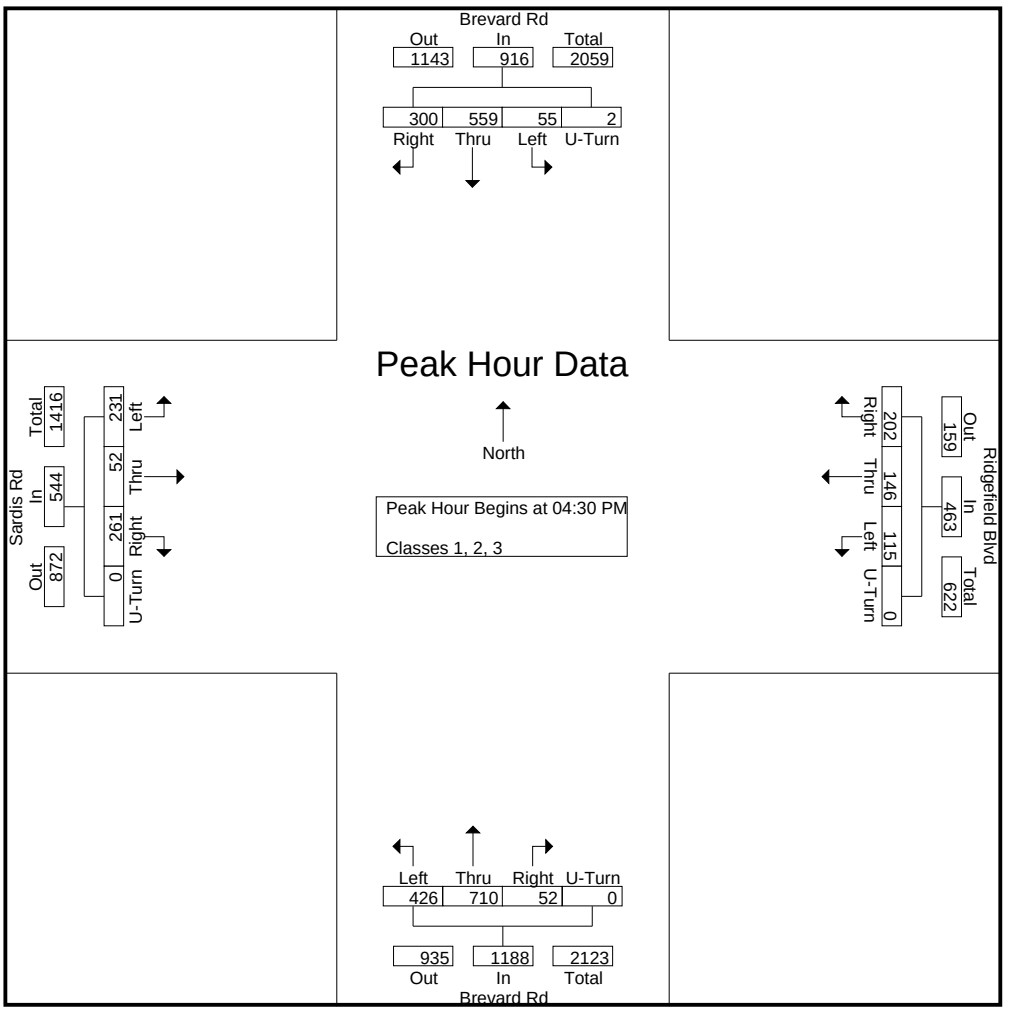

DocuSign Envelope ID: 5C03745C-4B01-4834-A65D-B77F558A4F46

Quality Counts

920 Blairhill Rd, Ste B-106
Charlotte, NC 28217

File Name : 15411706 - Brevard Rd -- Sardis Rd_Ridgefield Blvd
Site Code : 15411706
Start Date : 4/20/2021
Page No : 1

Groups Printed- Classes 4, 5, 6, 7

	Brevard Rd Southbound					Ridgefield Blvd Westbound					Brevard Rd Northbound					Sardis Rd Eastbound					
Start Time	Left	Thru	Right	U-Turn	App. Total	Left	Thru	Right	U-Turn	App. Total	Left	Thru	Right	U-Turn	App. Total	Left	Thru	Right	U-Turn	App. Total	Int. Total
06:00 AM	0	0	1	0	1	0	0	1	0	1	3	2	0	0	5	1	0	0	0	1	8
06:15 AM	0	1	0	0	1	1	0	0	0	1	2	6	0	0	8	1	0	2	0	3	13
06:30 AM	0	0	2	0	2	1	1	0	0	2	1	8	0	0	9	2	0	1	0	3	16
06:45 AM	1	3	4	0	8	1	0	0	0	1	1	8	0	0	9	2	0	4	0	6	24
Total	1	4	7	0	12	3	1	1	0	5	7	24	0	0	31	6	0	7	0	13	61
07:00 AM	0	3	3	0	6	1	0	0	0	1	4	4	1	0	9	4	0	5	0	9	25
07:15 AM	0	5	1	0	6	0	0	0	0	0	6	1	0	0	7	2	1	2	0	5	18
07:30 AM	0	6	1	0	7	0	2	0	0	2	6	3	0	0	9	5	0	2	0	7	25
07:45 AM	1	3	1	0	5	0	0	0	0	0	5	6	0	0	11	1	0	6	0	7	23
Total	1	17	6	0	24	1	2	0	0	3	21	14	1	0	36	12	1	15	0	28	91
08:00 AM	0	4	5	0	9	0	0	0	1	1	1	3	0	0	4	4	0	4	0	8	22
08:15 AM	0	5	1	0	6	0	0	0	0	0	2	4	0	0	6	3	1	3	0	7	19
08:30 AM	0	2	2	0	4	0	0	0	0	0	4	2	0	0	6	7	0	5	0	12	22
08:45 AM	1	5	2	0	8	0	0	0	0	0	4	8	0	0	12	2	1	5	0	8	28
Total	1	16	10	0	27	0	0	0	1	1	11	17	0	0	28	16	2	17	0	35	91
09:00 AM	0	5	4	0	9	0	0	1	0	1	3	4	1	0	8	5	0	5	0	10	28
09:15 AM	0	2	0	0	2	0	0	0	0	0	2	2	0	0	4	3	0	5	0	8	14
09:30 AM	0	5	5	0	10	0	0	1	0	1	2	7	0	0	9	4	0	2	0	6	26
09:45 AM	1	7	2	0	10	0	0	0	0	0	2	5	0	0	7	5	0	4	0	9	26
Total	1	19	11	0	31	0	0	2	0	2	9	18	1	0	28	17	0	16	0	33	94
10:00 AM	1	2	2	0	5	0	0	0	0	0	3	6	0	0	9	4	1	2	0	7	21
10:15 AM	0	6	4	0	10	0	0	1	0	1	1	3	0	0	4	4	0	0	0	4	19
10:30 AM	0	7	5	0	12	0	0	2	0	2	4	2	0	0	6	4	1	3	0	8	28
10:45 AM	2	4	6	0	12	1	1	1	0	3	9	7	0	0	16	3	1	4	0	8	39
Total	3	19	17	0	39	1	1	4	0	6	17	18	0	0	35	15	3	9	0	27	107
11:00 AM	0	1	4	0	5	0	0	0	0	0	5	3	0	0	8	5	0	3	0	8	21
11:15 AM	0	4	2	0	6	1	0	0	0	1	3	6	0	0	9	3	0	4	0	7	23
11:30 AM	0	4	6	0	10	0	0	0	0	0	3	7	0	0	10	1	1	3	0	5	25
11:45 AM	2	3	0	0	5	1	0	0	0	1	3	4	0	0	7	7	1	4	0	12	25
Total	2	12	12	0	26	2	0	0	0	2	14	20	0	0	34	16	2	14	0	32	94
12:00 PM	1	1	4	0	6	1	0	1	0	2	1	4	0	0	5	3	0	4	0	7	20
12:15 PM	1	4	1	0	6	0	0	2	0	2	3	3	0	0	6	2	0	1	0	3	17
12:30 PM	1	3	5	0	9	0	0	1	0	1	2	8	0	0	10	6	0	1	0	7	27
12:45 PM	1	2	3	0	6	0	0	1	0	1	7	1	0	0	8	2	0	2	0	4	19
Total	4	10	13	0	27	1	0	5	0	6	13	16	0	0	29	13	0	8	0	21	83
01:00 PM	3	6	2	0	11	0	0	2	0	2	3	5	0	0	8	4	0	7	0	11	32
01:15 PM	1	3	3	0	7	2	1	1	0	4	2	1	0	0	3	4	0	2	0	6	20
01:30 PM	2	5	1	0	8	2	1	1	0	4	7	6	0	0	13	4	0	4	0	8	33
01:45 PM	2	2	6	0	10	0	0	0	0	0	2	4	0	0	6	1	0	6	0	7	23
Total	8	16	12	0	36	4	2	4	0	10	14	16	0	0	30	13	0	19	0	32	108
02:00 PM	0	1	2	0	3	1	0	0	0	1	2	7	0	0	9	4	0	3	0	7	20
02:15 PM	0	4	5	0	9	0	0	0	0	0	2	5	0	0	7	6	0	3	0	9	25
02:30 PM	0	7	2	0	9	1	0	4	0	5	4	5	0	0	9	1	0	2	0	3	26
02:45 PM	0	4	3	0	7	0	0	0	0	0	2	4	0	0	6	1	0	4	0	5	18
Total	0	16	12	0	28	2	0	4	0	6	10	21	0	0	31	12	0	12	0	24	89
03:00 PM	1	5	1	0	7	0	1	0	0	1	3	5	0	0	8	3	0	4	0	7	23
03:15 PM	1	11	3	0	15	0	0	1	0	1	5	7	0	0	12	1	0	3	0	4	32
03:30 PM	0	6	0	0	6	0	1	1	0	2	5	9	0	0	14	2	1	0	0	3	25

DocuSign Envelope ID: 5C03745C-4B01-4834-A65D-B77F558A4F46

Quality Counts

920 Blairhill Rd, Ste B-106
Charlotte, NC 28217

File Name : 15411706 - Brevard Rd -- Sardis Rd_Ridgefield Blvd
Site Code : 15411706
Start Date : 4/20/2021

Groups Printed- Classes 4, 5, 6, 7

	Brevard Rd Southbound					Ridgefield Blvd Westbound					Brevard Rd Northbound					Sardis Rd Eastbound					
Start Time	Left	Thru	Right	U-Turn	App. Total	Left	Thru	Right	U-Turn	App. Total	Left	Thru	Right	U-Turn	App. Total	Left	Thru	Right	U-Turn	App. Total	Int. Total
03:45 PM	0	9	4	0	13	0	0	1	0	1	2	7	0	0	9	1	0	5	0	6	29
Total	2	31	8	0	41	0	2	3	0	5	15	28	0	0	43	7	1	12	0	20	109
04:00 PM	1	8	9	0	18	0	1	1	0	2	4	7	0	0	11	2	0	6	0	8	39
04:15 PM	0	5	1	0	6	0	0	0	0	0	5	4	0	0	9	1	1	7	0	9	24
04:30 PM	1	1	1	0	3	0	1	0	0	1	8	5	1	0	14	3	0	7	0	10	28
04:45 PM	0	1	1	0	2	0	0	1	0	1	6	2	0	0	8	4	1	2	0	7	18
Total	2	15	12	0	29	0	2	2	0	4	23	18	1	0	42	10	2	22	0	34	109
05:00 PM	1	3	1	0	5	0	0	0	0	0	5	8	0	0	13	1	1	3	0	5	23
05:15 PM	0	0	2	0	2	0	0	0	0	0	10	9	0	0	19	1	0	3	0	4	25
05:30 PM	1	4	1	0	6	0	0	0	0	0	2	1	0	0	3	0	1	3	0	4	13
05:45 PM	2	1	1	0	4	0	1	0	0	1	3	2	0	0	5	1	0	2	0	3	13
Total	4	8	5	0	17	0	1	0	0	1	20	20	0	0	40	3	2	11	0	16	74
06:00 PM	0	2	1	0	3	1	0	0	0	1	5	3	0	0	8	1	0	1	0	2	14
06:15 PM	0	3	0	0	3	1	0	1	0	2	0	1	0	0	1	1	0	3	0	4	10
06:30 PM	0	1	0	0	1	0	0	0	0	0	1	1	0	0	2	0	0	1	0	1	4
06:45 PM	1	1	0	0	2	0	0	0	0	0	0	1	0	0	1	0	0	1	0	1	4
Total	1	7	1	0	9	2	0	1	0	3	6	6	0	0	12	2	0	6	0	8	32
Grand Total	30	190	126	0	346	16	11	26	1	54	180	236	3	0	419	142	13	168	0	323	1142
Apprch %	8.7	54.9	36.4	0		29.6	20.4	48.1	1.9		43	56.3	0.7	0		44	4	52	0		
Total %	2.6	16.6	11	0	30.3	1.4	1	2.3	0.1	4.7	15.8	20.7	0.3	0	36.7	12.4	1.1	14.7	0	28.3	

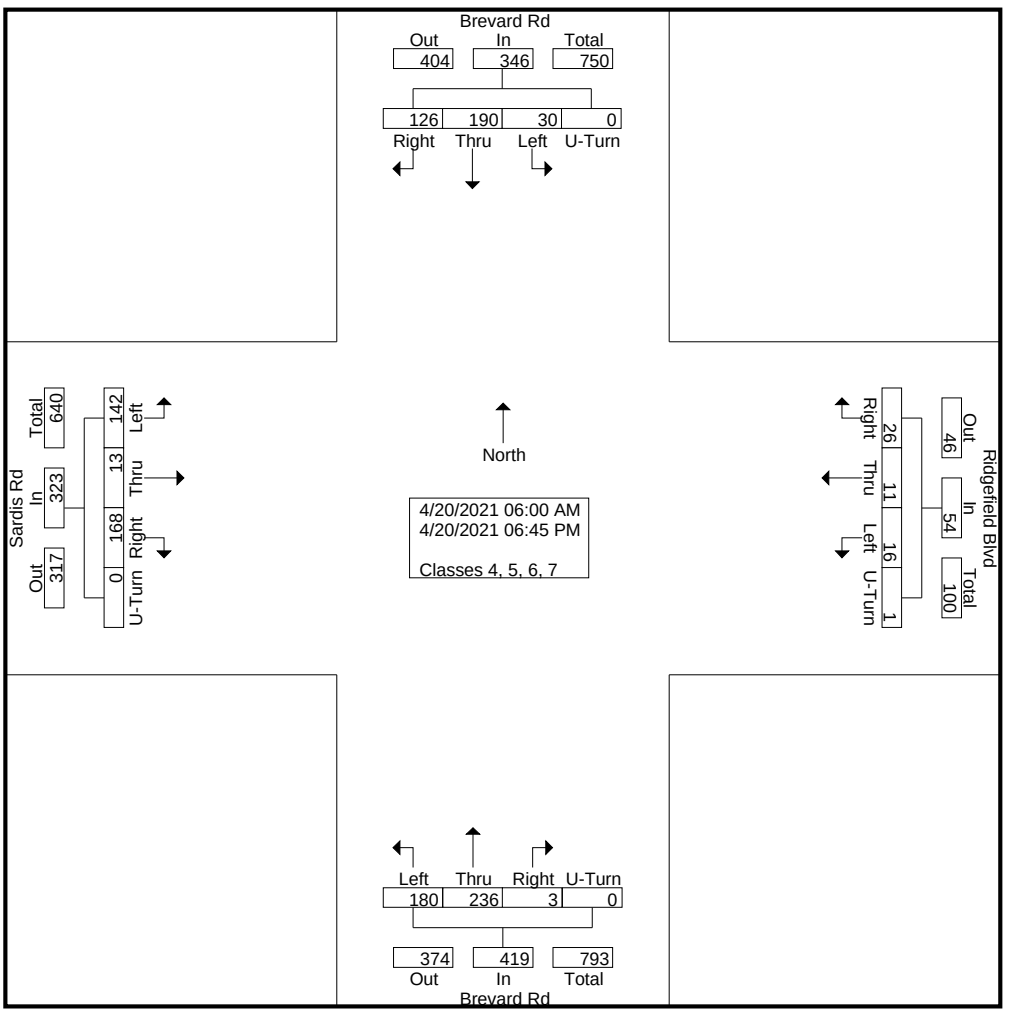

DocuSign Envelope ID: 5C03745C-4B01-4834-A65D-B77F558A4F46

Quality Counts

920 Blairhill Rd, Ste B-106
Charlotte, NC 28217

File Name : 15411706 - Brevard Rd -- Sardis Rd_Ridgefield Blvd
Site Code : 15411706
Start Date : 4/20/2021
Page No : 3

	Brevard Rd Southbound					Ridgefield Blvd Westbound					Brevard Rd Northbound					Sardis Rd Eastbound					
Start Time	Left	Thru	Right	U-Turn	App. Total	Left	Thru	Right	U-Turn	App. Total	Left	Thru	Right	U-Turn	App. Total	Left	Thru	Right	U-Turn	App. Total	Int. Total
Peak Hour Analysis From 06:00 AM to 11:45 AM - Peak 1 of 1																					
Peak Hour for Entire Intersection Begins at 10:30 AM																					
10:30 AM	0	**7**	5	0	**12**	0	0	**2**	0	2	4	2	0	0	6	4	**1**	3	0	**8**	28
10:45 AM	**2**	4	**6**	0	12	**1**	**1**	1	0	**3**	**9**	**7**	0	0	**16**	3	1	**4**	0	8	**39**
11:00 AM	0	1	4	0	5	0	0	0	0	0	5	3	0	0	8	**5**	0	3	0	8	21
11:15 AM	0	4	2	0	6	1	0	0	0	1	3	6	0	0	9	3	0	4	0	7	23
Total Volume	2	16	17	0	35	2	1	3	0	6	21	18	0	0	39	15	2	14	0	31	111
% App. Total	5.7	45.7	48.6	0		33.3	16.7	50	0		53.8	46.2	0	0		48.4	6.5	45.2	0		
PHF	.250	.571	.708	.000	.729	.500	.250	.375	.000	.500	.583	.643	.000	.000	.609	.750	.500	.875	.000	.969	.712

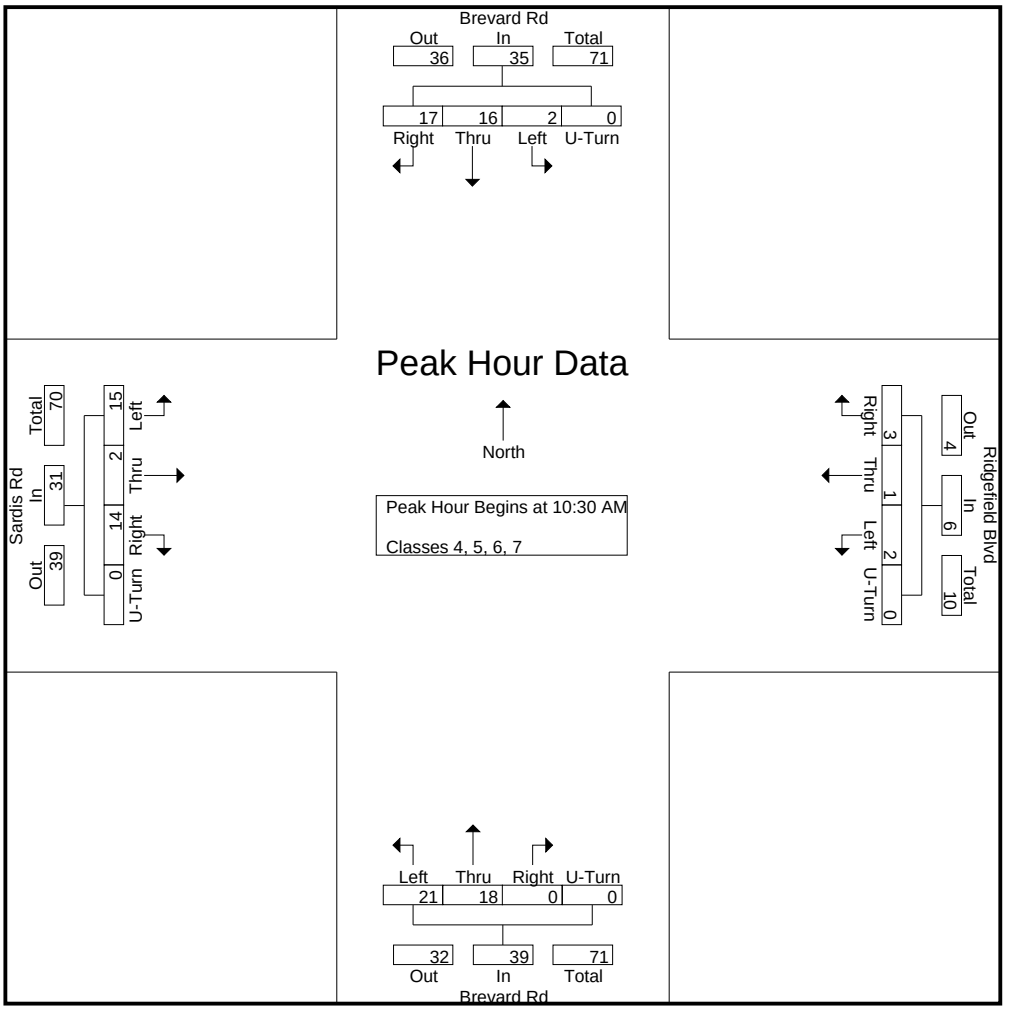

DocuSign Envelope ID: 5C03745C-4B01-4834-A65D-B77F558A4F46

Quality Counts

920 Blairhill Rd, Ste B-106
Charlotte, NC 28217

File Name : 15411706 - Brevard Rd -- Sardis Rd_Ridgefield Blvd
Site Code : 15411706
Start Date : 4/20/2021
Page No : 4

	Brevard Rd Southbound					Ridgefield Blvd Westbound					Brevard Rd Northbound					Sardis Rd Eastbound					
Start Time	Left	Thru	Right	U-Turn	App. Total	Left	Thru	Right	U-Turn	App. Total	Left	Thru	Right	U-Turn	App. Total	Left	Thru	Right	U-Turn	App. Total	Int. Total
Peak Hour Analysis From 12:00 PM to 06:45 PM - Peak 1 of 1																					
Peak Hour for Entire Intersection Begins at 03:15 PM																					
03:15 PM	**1**	**11**	3	0	15	0	0	**1**	0	1	**5**	7	0	0	12	1	0	3	0	4	32
03:30 PM	0	6	0	0	6	0	**1**	1	0	**2**	5	**9**	0	0	**14**	**2**	**1**	0	0	3	25
03:45 PM	0	9	4	0	13	0	0	1	0	1	2	7	0	0	9	1	0	5	0	6	29
04:00 PM	1	8	**9**	0	**18**	0	1	1	0	2	4	7	0	0	11	2	0	**6**	0	**8**	**39**
Total Volume	2	34	16	0	52	0	2	4	0	6	16	30	0	0	46	6	1	14	0	21	125
% App. Total	3.8	65.4	30.8	0		0	33.3	66.7	0		34.8	65.2	0	0		28.6	4.8	66.7	0		
PHF	.500	.773	.444	.000	.722	.000	.500	1.00	.000	.750	.800	.833	.000	.000	.821	.750	.250	.583	.000	.656	.801

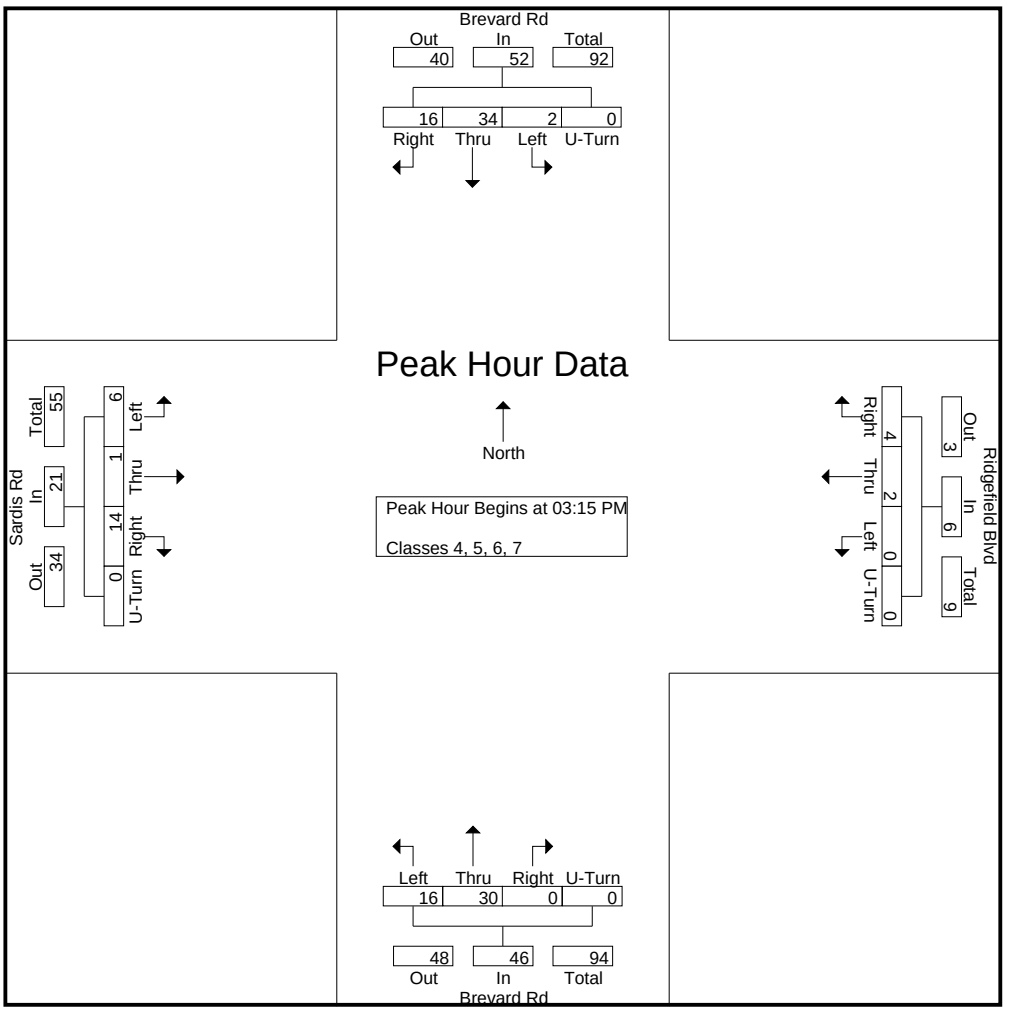

DocuSign Envelope ID: 5C03745C-4B01-4834-A65D-B77F558A4F46

Quality Counts

920 Blairhill Rd, Ste B-106
Charlotte, NC 28217

File Name : 15411706 - Brevard Rd -- Sardis Rd_Ridgefield Blvd
Site Code : 15411706
Start Date : 4/20/2021
Page No : 1

Groups Printed- Classes 8, 9, 10

	Brevard Rd Southbound					Ridgefield Blvd Westbound					Brevard Rd Northbound					Sardis Rd Eastbound					
Start Time	Left	Thru	Right	U-Turn	App. Total	Left	Thru	Right	U-Turn	App. Total	Left	Thru	Right	U-Turn	App. Total	Left	Thru	Right	U-Turn	App. Total	Int. Total
06:00 AM	0	0	0	0	0	0	0	0	0	0	0	1	0	0	1	1	0	1	0	2	3
06:15 AM	0	0	2	0	2	0	0	0	0	0	1	0	0	0	1	0	0	0	0	0	3
06:30 AM	1	0	1	0	2	0	0	0	0	0	0	0	0	0	0	0	0	0	0	0	2
06:45 AM	0	0	0	0	0	0	0	0	0	0	2	1	0	0	3	2	0	0	0	2	5
Total	1	0	3	0	4	0	0	0	0	0	3	2	0	0	5	3	0	1	0	4	13
07:00 AM	0	1	1	0	2	0	0	1	0	1	1	1	0	0	2	2	0	1	0	3	8
07:15 AM	1	2	1	0	4	0	1	0	0	1	1	0	0	0	1	0	0	0	0	0	6
07:30 AM	0	2	1	0	3	0	0	0	0	0	0	0	0	0	0	4	0	1	0	5	8
07:45 AM	0	3	3	0	6	0	0	0	0	0	0	1	0	0	1	4	0	0	0	4	11
Total	1	8	6	0	15	0	1	1	0	2	2	2	0	0	4	10	0	2	0	12	33
08:00 AM	0	0	1	0	1	0	0	0	0	0	3	2	0	0	5	4	0	1	0	5	11
08:15 AM	0	0	6	0	6	0	0	0	0	0	1	4	0	0	5	5	0	1	0	6	17
08:30 AM	0	3	2	0	5	0	0	0	0	0	0	0	0	0	0	2	0	2	0	4	9
08:45 AM	0	2	2	0	4	0	0	0	0	0	1	1	0	0	2	1	0	0	0	1	7
Total	0	5	11	0	16	0	0	0	0	0	5	7	0	0	12	12	0	4	0	16	44
09:00 AM	0	2	5	0	7	0	0	0	0	0	0	1	0	0	1	1	0	0	0	1	9
09:15 AM	1	4	6	0	11	0	0	2	0	2	1	2	0	0	3	2	0	2	0	4	20
09:30 AM	1	1	4	0	6	0	0	0	0	0	1	4	0	0	5	3	0	1	0	4	15
09:45 AM	0	4	2	0	6	1	0	0	0	1	1	1	0	0	2	4	0	2	0	6	15
Total	2	11	17	0	30	1	0	2	0	3	3	8	0	0	11	10	0	5	0	15	59
10:00 AM	1	2	5	0	8	0	0	1	0	1	2	1	0	0	3	0	0	1	0	1	13
10:15 AM	0	3	4	0	7	0	0	0	0	0	1	2	1	0	4	0	0	0	0	0	11
10:30 AM	1	1	0	0	2	0	0	1	0	1	3	3	1	0	7	1	0	3	0	4	14
10:45 AM	0	3	5	0	8	0	2	0	0	2	0	0	0	0	0	3	0	0	0	3	13
Total	2	9	14	0	25	0	2	2	0	4	6	6	2	0	14	4	0	4	0	8	51
11:00 AM	0	0	2	0	2	0	0	0	0	0	3	1	0	0	4	0	1	0	0	1	7
11:15 AM	0	2	1	0	3	0	1	0	0	1	1	2	0	0	3	3	0	1	0	4	11
11:30 AM	0	1	0	0	1	0	0	0	0	0	3	0	0	0	3	3	0	0	0	3	7
11:45 AM	0	3	1	0	4	0	0	0	0	0	0	2	0	0	2	6	1	0	0	7	13
Total	0	6	4	0	10	0	1	0	0	1	7	5	0	0	12	12	2	1	0	15	38
12:00 PM	0	1	4	0	5	0	0	0	0	0	0	2	1	0	3	3	0	0	0	3	11
12:15 PM	0	1	1	0	2	0	0	1	0	1	0	3	0	0	3	0	0	1	0	1	7
12:30 PM	0	1	4	0	5	0	0	2	0	2	1	2	0	0	3	1	1	1	0	3	13
12:45 PM	1	4	0	0	5	0	0	0	0	0	2	2	0	0	4	1	0	1	0	2	11
Total	1	7	9	0	17	0	0	3	0	3	3	9	1	0	13	5	1	3	0	9	42
01:00 PM	0	5	9	0	14	0	0	2	0	2	0	1	0	0	1	2	0	0	0	2	19
01:15 PM	0	1	4	0	5	1	1	0	0	2	0	1	0	0	1	1	0	0	0	1	9
01:30 PM	0	2	2	0	4	1	1	0	0	2	0	3	0	0	3	3	0	0	0	3	12
01:45 PM	0	0	1	0	1	0	0	0	0	0	1	0	1	0	2	3	0	0	0	3	6
Total	0	8	16	0	24	2	2	2	0	6	1	5	1	0	7	9	0	0	0	9	46
02:00 PM	1	0	2	0	3	0	0	1	0	1	2	1	0	0	3	2	1	2	0	5	12
02:15 PM	0	1	2	0	3	0	0	0	0	0	0	1	0	0	1	2	0	1	0	3	7
02:30 PM	0	4	3	0	7	0	0	0	0	0	2	0	0	0	2	1	0	1	0	2	11
02:45 PM	0	1	2	0	3	0	1	0	0	1	5	0	0	0	5	1	0	0	0	1	10
Total	1	6	9	0	16	0	1	1	0	2	9	2	0	0	11	6	1	4	0	11	40
03:00 PM	0	2	1	0	3	0	0	1	0	1	2	0	1	0	3	3	0	1	0	4	11
03:15 PM	0	0	4	0	4	0	0	0	0	0	1	2	0	0	3	0	0	3	0	3	10
03:30 PM	0	1	1	0	2	0	0	0	0	0	2	3	0	0	5	0	0	2	0	2	9

DocuSign Envelope ID: 5C03745C-4B01-4834-A65D-B77F558A4F46

Quality Counts

920 Blairhill Rd, Ste B-106
Charlotte, NC 28217

File Name : 15411706 - Brevard Rd -- Sardis Rd_Ridgefield Blvd
Site Code : 15411706
Start Date : 4/20/2021

Groups Printed- Classes 8, 9, 10

	Brevard Rd Southbound					Ridgefield Blvd Westbound					Brevard Rd Northbound					Sardis Rd Eastbound					
Start Time	Left	Thru	Right	U-Turn	App. Total	Left	Thru	Right	U-Turn	App. Total	Left	Thru	Right	U-Turn	App. Total	Left	Thru	Right	U-Turn	App. Total	Int. Total
03:45 PM	0	1	2	0	3	0	0	0	0	0	0	0	0	0	0	1	0	0	0	1	4
Total	0	4	8	0	12	0	0	1	0	1	5	5	1	0	11	4	0	6	0	10	34
04:00 PM	0	0	3	0	3	0	0	0	0	0	0	1	0	0	1	0	0	2	0	2	6
04:15 PM	0	1	3	0	4	1	0	0	0	1	1	3	0	0	4	1	0	1	0	2	11
04:30 PM	0	0	1	0	1	0	0	1	0	1	0	0	0	0	0	2	0	0	0	2	4
04:45 PM	1	1	1	0	3	0	0	0	0	0	2	1	0	0	3	2	0	0	0	2	8
Total	1	2	8	0	11	1	0	1	0	2	3	5	0	0	8	5	0	3	0	8	29
05:00 PM	0	0	2	0	2	0	0	0	0	0	0	0	0	0	0	0	0	4	0	4	6
05:15 PM	0	1	0	0	1	0	0	0	0	0	1	0	0	0	1	2	0	2	0	4	6
05:30 PM	0	0	2	0	2	0	0	1	0	1	0	3	0	0	3	0	0	1	0	1	7
05:45 PM	0	2	0	0	2	0	0	0	0	0	1	0	0	0	1	1	0	1	0	2	5
Total	0	3	4	0	7	0	0	1	0	1	2	3	0	0	5	3	0	8	0	11	24
06:00 PM	0	0	0	0	0	0	0	1	0	1	1	0	0	0	1	0	0	1	0	1	3
06:15 PM	0	0	4	0	4	0	1	0	0	1	0	1	0	0	1	0	0	0	0	0	6
06:30 PM	0	0	1	0	1	0	0	0	0	0	0	0	0	0	0	1	0	0	0	1	2
06:45 PM	0	0	1	0	1	0	0	0	0	0	0	0	0	0	0	2	0	1	0	3	4
Total	0	0	6	0	6	0	1	1	0	2	1	1	0	0	2	3	0	2	0	5	15
Grand Total	9	69	115	0	193	4	8	15	0	27	50	60	5	0	115	86	4	43	0	133	468
Apprch %	4.7	35.8	59.6	0		14.8	29.6	55.6	0		43.5	52.2	4.3	0		64.7	3	32.3	0		
Total %	1.9	14.7	24.6	0	41.2	0.9	1.7	3.2	0	5.8	10.7	12.8	1.1	0	24.6	18.4	0.9	9.2	0	28.4	

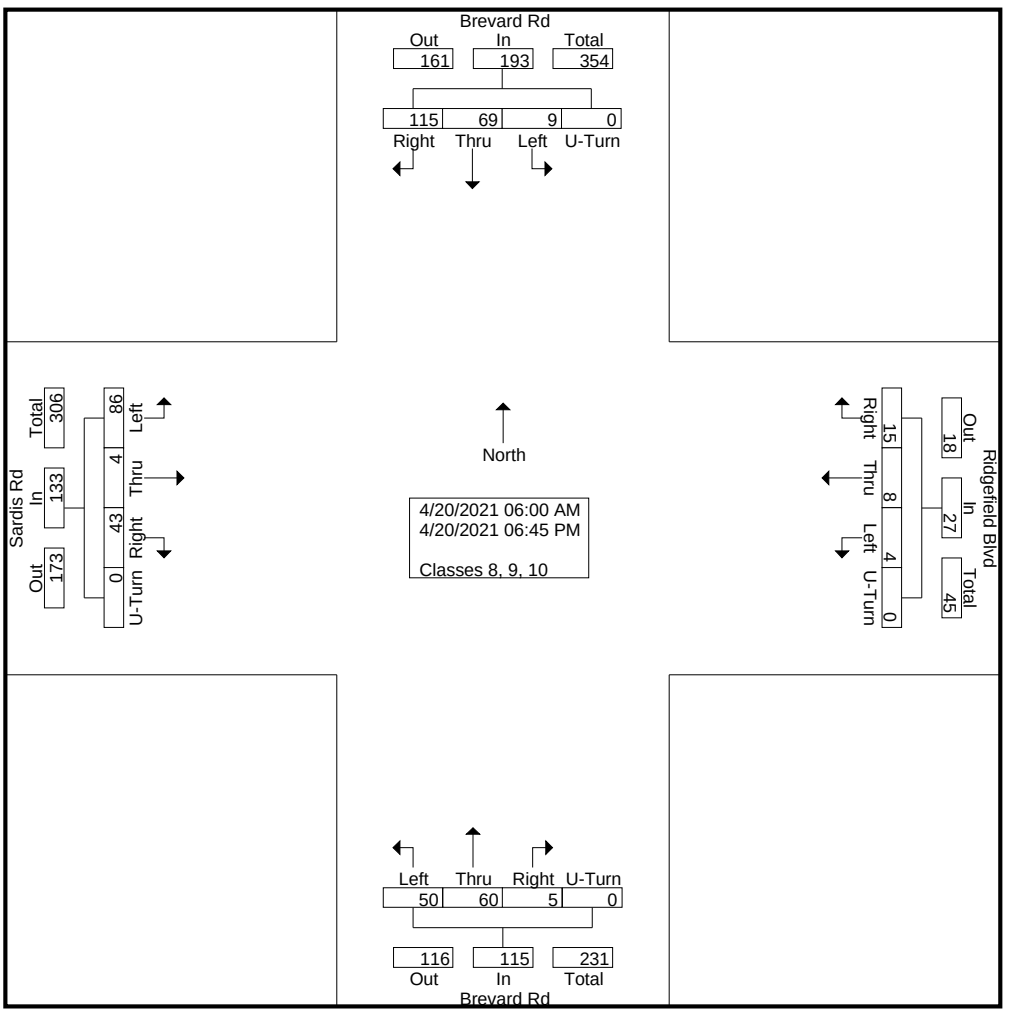

DocuSign Envelope ID: 5C03745C-4B01-4834-A65D-B77F558A4F46

Quality Counts

920 Blairhill Rd, Ste B-106
Charlotte, NC 28217

File Name : 15411706 - Brevard Rd -- Sardis Rd_Ridgefield Blvd
Site Code : 15411706
Start Date : 4/20/2021
Page No : 3

	Brevard Rd Southbound					Ridgefield Blvd Westbound					Brevard Rd Northbound					Sardis Rd Eastbound					
Start Time	Left	Thru	Right	U-Turn	App. Total	Left	Thru	Right	U-Turn	App. Total	Left	Thru	Right	U-Turn	App. Total	Left	Thru	Right	U-Turn	App. Total	Int. Total
Peak Hour Analysis From 06:00 AM to 11:45 AM - Peak 1 of 1																					
Peak Hour for Entire Intersection Begins at 09:15 AM																					
09:15 AM	**1**	**4**	**6**	0	**11**	0	0	**2**	0	**2**	1	2	0	0	3	2	0	**2**	0	4	**20**
09:30 AM	1	1	4	0	6	0	0	0	0	0	1	**4**	0	0	**5**	3	0	1	0	4	15
09:45 AM	0	4	2	0	6	**1**	0	0	0	1	1	1	0	0	2	**4**	0	2	0	**6**	15
10:00 AM	1	2	5	0	8	0	0	1	0	1	**2**	1	0	0	3	0	0	1	0	1	13
Total Volume	3	11	17	0	31	1	0	3	0	4	5	8	0	0	13	9	0	6	0	15	63
% App. Total	9.7	35.5	54.8	0		25	0	75	0		38.5	61.5	0	0		60	0	40	0		
PHF	.750	.688	.708	.000	.705	.250	.000	.375	.000	.500	.625	.500	.000	.000	.650	.563	.000	.750	.000	.625	.788

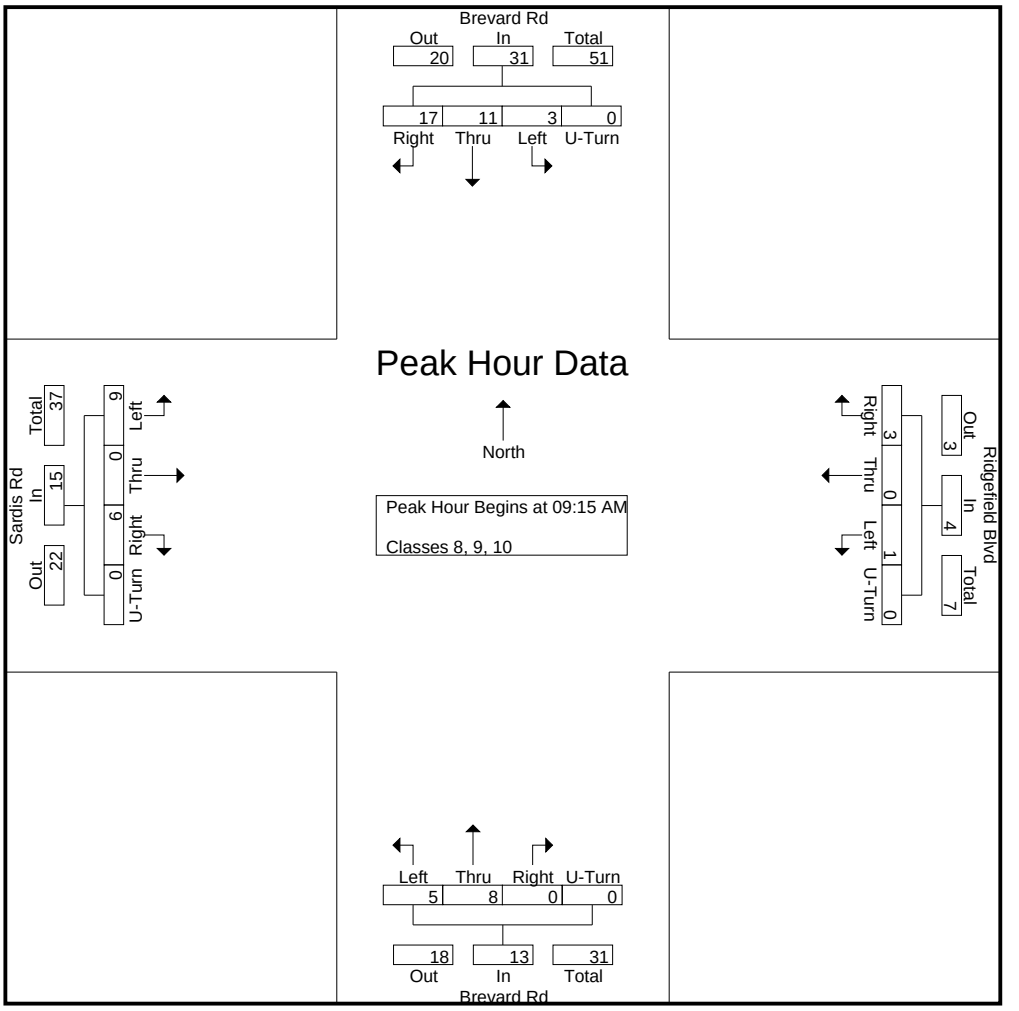

DocuSign Envelope ID: 5C03745C-4B01-4834-A65D-B77F558A4F46

Quality Counts

920 Blairhill Rd, Ste B-106
Charlotte, NC 28217

File Name : 15411706 - Brevard Rd -- Sardis Rd_Ridgefield Blvd
Site Code : 15411706
Start Date : 4/20/2021

	Brevard Rd Southbound					Ridgefield Blvd Westbound					Brevard Rd Northbound					Sardis Rd Eastbound					
Start Time	Left	Thru	Right	U-Turn	App. Total	Left	Thru	Right	U-Turn	App. Total	Left	Thru	Right	U-Turn	App. Total	Left	Thru	Right	U-Turn	App. Total	Int. Total
Peak Hour Analysis From 12:00 PM to 06:45 PM - Peak 1 of 1																					
Peak Hour for Entire Intersection Begins at 12:30 PM																					
12:30 PM	0	1	4	0	5	0	0	**2**	0	**2**	1	**2**	0	0	3	1	**1**	**1**	0	**3**	13
12:45 PM	**1**	4	0	0	5	0	0	0	0	0	**2**	2	0	0	**4**	1	0	1	0	2	11
01:00 PM	0	**5**	**9**	0	**14**	0	0	2	0	2	0	1	0	0	1	**2**	0	0	0	2	**19**
01:15 PM	0	1	4	0	5	**1**	**1**	0	0	2	0	1	0	0	1	1	0	0	0	1	9
Total Volume	1	11	17	0	29	1	1	4	0	6	3	6	0	0	9	5	1	2	0	8	52
% App. Total	3.4	37.9	58.6	0		16.7	16.7	66.7	0		33.3	66.7	0	0		62.5	12.5	25	0		
PHF	.250	.550	.472	.000	.518	.250	.250	.500	.000	.750	.375	.750	.000	.000	.563	.625	.250	.500	.000	.667	.684

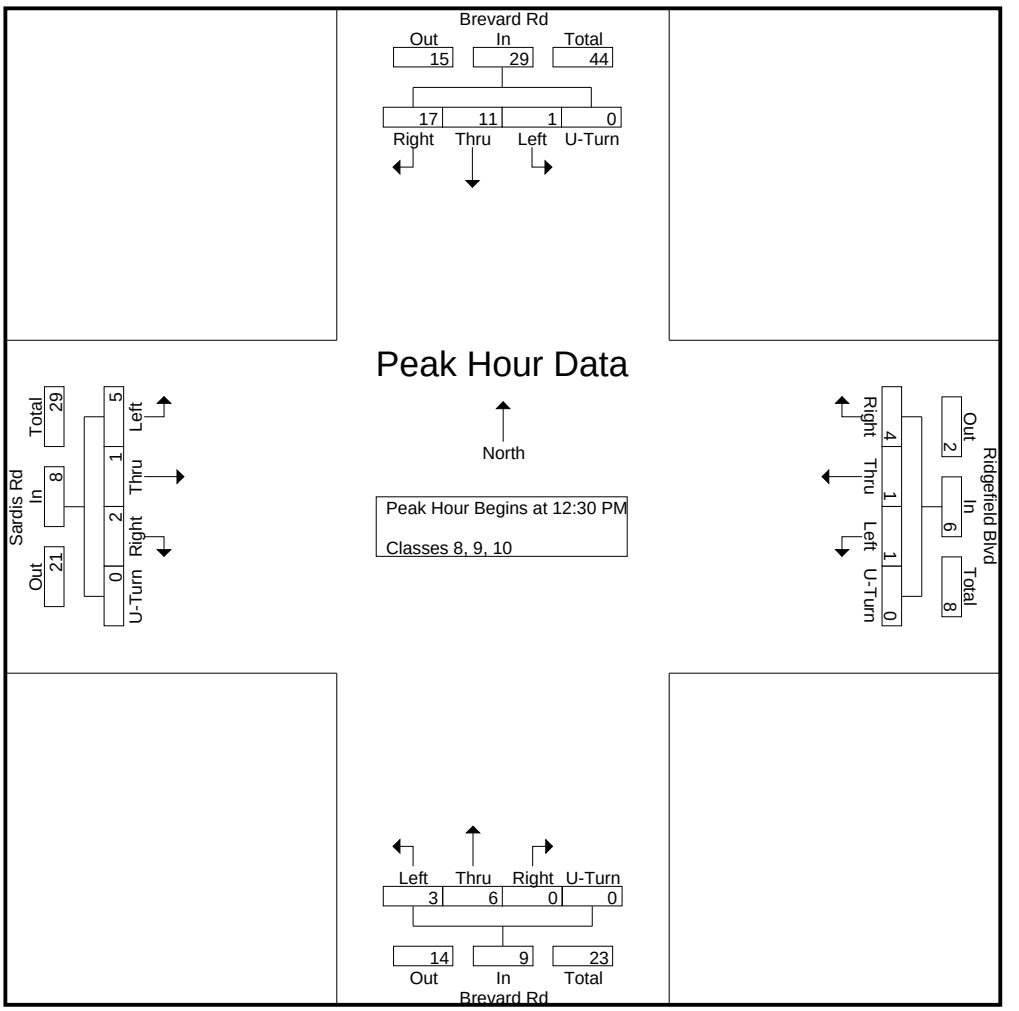

DocuSign Envelope ID: 5C03745C-4B01-4834-A65D-B77F558A4F46

Quality Counts

920 Blairhill Rd, Ste B-106
Charlotte, NC 28217

File Name : 15411706 - Brevard Rd -- Sardis Rd_Ridgefield Blvd
Site Code : 15411706
Start Date : 4/20/2021
Page No : 1

Groups Printed- Classes 11, 12, 13

	Brevard Rd Southbound					Ridgefield Blvd Westbound					Brevard Rd Northbound					Sardis Rd Eastbound					
Start Time	Left	Thru	Right	U-Turn	App. Total	Left	Thru	Right	U-Turn	App. Total	Left	Thru	Right	U-Turn	App. Total	Left	Thru	Right	U-Turn	App. Total	Int. Total
06:00 AM	0	0	0	0	0	0	0	0	0	0	0	0	0	0	0	0	0	0	0	0	0
06:15 AM	0	0	0	0	0	0	0	0	0	0	0	0	0	0	0	0	0	0	0	0	0
06:30 AM	0	0	0	0	0	0	0	0	0	0	0	0	0	0	0	0	0	0	0	0	0
06:45 AM	0	0	0	0	0	0	0	0	0	0	0	0	0	0	0	0	0	0	0	0	0
Total	0	0	0	0	0	0	0	0	0	0	0	0	0	0	0	0	0	0	0	0	0
07:00 AM	0	0	0	0	0	0	0	0	0	0	0	0	0	0	0	0	0	0	0	0	0
07:15 AM	0	0	0	0	0	0	0	0	0	0	0	0	0	0	0	0	0	0	0	0	0
07:30 AM	0	0	0	0	0	0	0	0	0	0	0	0	0	0	0	0	0	0	0	0	0
07:45 AM	0	0	0	0	0	0	0	0	0	0	0	0	0	0	0	0	0	0	0	0	0
Total	0	0	0	0	0	0	0	0	0	0	0	0	0	0	0	0	0	0	0	0	0
08:00 AM	0	0	0	0	0	0	0	0	0	0	0	0	0	0	0	0	0	0	0	0	0
08:15 AM	0	0	0	0	0	0	0	0	0	0	0	0	0	0	0	0	0	0	0	0	0
08:30 AM	0	0	0	0	0	0	0	0	0	0	0	0	0	0	0	0	0	0	0	0	0
08:45 AM	0	0	0	0	0	0	0	0	0	0	0	0	0	0	0	0	0	0	0	0	0
Total	0	0	0	0	0	0	0	0	0	0	0	0	0	0	0	0	0	0	0	0	0
09:00 AM	0	0	0	0	0	0	0	0	0	0	0	0	0	0	0	0	0	0	0	0	0
09:15 AM	0	0	0	0	0	0	0	0	0	0	0	0	0	0	0	0	0	0	0	0	0
09:30 AM	0	0	0	0	0	0	0	0	0	0	0	0	0	0	0	0	0	0	0	0	0
09:45 AM	0	0	0	0	0	0	0	0	0	0	0	0	0	0	0	0	0	0	0	0	0
Total	0	0	0	0	0	0	0	0	0	0	0	0	0	0	0	0	0	0	0	0	0
10:00 AM	0	0	0	0	0	0	0	0	0	0	0	0	0	0	0	0	0	0	0	0	0
10:15 AM	0	0	0	0	0	0	0	0	0	0	0	0	0	0	0	0	0	0	0	0	0
10:30 AM	0	0	0	0	0	0	0	0	0	0	0	0	0	0	0	0	0	0	0	0	0
10:45 AM	0	0	0	0	0	0	0	0	0	0	0	0	0	0	0	0	0	0	0	0	0
Total	0	0	0	0	0	0	0	0	0	0	0	0	0	0	0	0	0	0	0	0	0
11:00 AM	0	0	0	0	0	0	0	0	0	0	0	0	0	0	0	0	0	0	0	0	0
11:15 AM	0	0	0	0	0	0	0	0	0	0	0	0	0	0	0	0	0	0	0	0	0
11:30 AM	0	0	0	0	0	0	0	0	0	0	0	0	0	0	0	0	0	0	0	0	0
11:45 AM	0	0	0	0	0	0	0	0	0	0	0	0	0	0	0	0	0	0	0	0	0
Total	0	0	0	0	0	0	0	0	0	0	0	0	0	0	0	0	0	0	0	0	0
12:00 PM	0	0	0	0	0	0	0	0	0	0	0	0	0	0	0	0	0	0	0	0	0
12:15 PM	0	0	0	0	0	0	0	0	0	0	0	0	0	0	0	0	0	0	0	0	0
12:30 PM	0	0	0	0	0	0	0	0	0	0	0	0	0	0	0	0	0	0	0	0	0
12:45 PM	0	0	0	0	0	0	0	0	0	0	0	0	0	0	0	0	0	0	0	0	0
Total	0	0	0	0	0	0	0	0	0	0	0	0	0	0	0	0	0	0	0	0	0
01:00 PM	0	0	0	0	0	0	0	0	0	0	0	0	0	0	0	0	0	0	0	0	0
01:15 PM	0	0	0	0	0	0	0	0	0	0	0	0	0	0	0	0	0	0	0	0	0
01:30 PM	0	0	0	0	0	0	0	0	0	0	0	0	0	0	0	0	0	0	0	0	0
01:45 PM	0	0	0	0	0	0	0	0	0	0	0	0	0	0	0	0	0	0	0	0	0
Total	0	0	0	0	0	0	0	0	0	0	0	0	0	0	0	0	0	0	0	0	0
02:00 PM	0	0	0	0	0	0	0	0	0	0	0	0	0	0	0	0	0	0	0	0	0
02:15 PM	0	0	0	0	0	0	0	0	0	0	0	0	0	0	0	0	0	0	0	0	0
02:30 PM	0	0	0	0	0	0	0	0	0	0	0	0	0	0	0	0	0	0	0	0	0
02:45 PM	0	0	0	0	0	0	0	0	0	0	0	0	0	0	0	0	0	0	0	0	0
Total	0	0	0	0	0	0	0	0	0	0	0	0	0	0	0	0	0	0	0	0	0
03:00 PM	0	0	0	0	0	0	0	0	0	0	0	0	0	0	0	0	0	0	0	0	0
03:15 PM	0	0	0	0	0	0	0	0	0	0	0	0	0	0	0	0	0	0	0	0	0
03:30 PM	0	0	0	0	0	0	0	0	0	0	0	0	0	0	0	0	0	0	0	0	0

DocuSign Envelope ID: 5C03745C-4B01-4834-A65D-B77F558A4F46

Quality Counts

920 Blairhill Rd, Ste B-106
Charlotte, NC 28217

File Name : 15411706 - Brevard Rd -- Sardis Rd_Ridgefield Blvd
Site Code : 15411706
Start Date : 4/20/2021

Groups Printed- Classes 11, 12, 13

	Brevard Rd Southbound					Ridgefield Blvd Westbound					Brevard Rd Northbound					Sardis Rd Eastbound					
Start Time	Left	Thru	Right	U-Turn	App. Total	Left	Thru	Right	U-Turn	App. Total	Left	Thru	Right	U-Turn	App. Total	Left	Thru	Right	U-Turn	App. Total	Int. Total
03:45 PM	0	0	0	0	0	0	0	0	0	0	0	0	0	0	0	0	0	0	0	0	0
Total	0	0	0	0	0	0	0	0	0	0	0	0	0	0	0	0	0	0	0	0	0
04:00 PM	0	0	0	0	0	0	0	0	0	0	0	0	0	0	0	0	0	0	0	0	0
04:15 PM	0	0	0	0	0	0	0	0	0	0	0	0	0	0	0	0	0	0	0	0	0
04:30 PM	0	0	0	0	0	0	0	0	0	0	0	0	0	0	0	0	0	0	0	0	0
04:45 PM	0	0	0	0	0	0	0	0	0	0	0	0	0	0	0	0	0	0	0	0	0
Total	0	0	0	0	0	0	0	0	0	0	0	0	0	0	0	0	0	0	0	0	0
05:00 PM	0	0	0	0	0	0	0	0	0	0	0	0	0	0	0	0	0	0	0	0	0
05:15 PM	0	0	0	0	0	0	0	0	0	0	0	0	0	0	0	0	0	0	0	0	0
05:30 PM	0	0	0	0	0	0	0	0	0	0	0	0	0	0	0	0	0	0	0	0	0
05:45 PM	0	0	0	0	0	0	0	0	0	0	0	0	0	0	0	0	0	0	0	0	0
Total	0	0	0	0	0	0	0	0	0	0	0	0	0	0	0	0	0	0	0	0	0
06:00 PM	0	0	0	0	0	0	0	0	0	0	0	0	0	0	0	0	0	0	0	0	0
06:15 PM	0	0	0	0	0	0	0	0	0	0	0	0	0	0	0	0	0	0	0	0	0
06:30 PM	0	0	0	0	0	0	0	0	0	0	0	0	0	0	0	0	0	0	0	0	0
06:45 PM	0	0	0	0	0	0	0	0	0	0	0	0	0	0	0	0	0	0	0	0	0
Total	0	0	0	0	0	0	0	0	0	0	0	0	0	0	0	0	0	0	0	0	0
Grand Total	0	0	0	0	0	0	0	0	0	0	0	0	0	0	0	0	0	0	0	0	0
Apprch %	0	0	0	0		0	0	0	0		0	0	0	0		0	0	0	0		
Total %																					

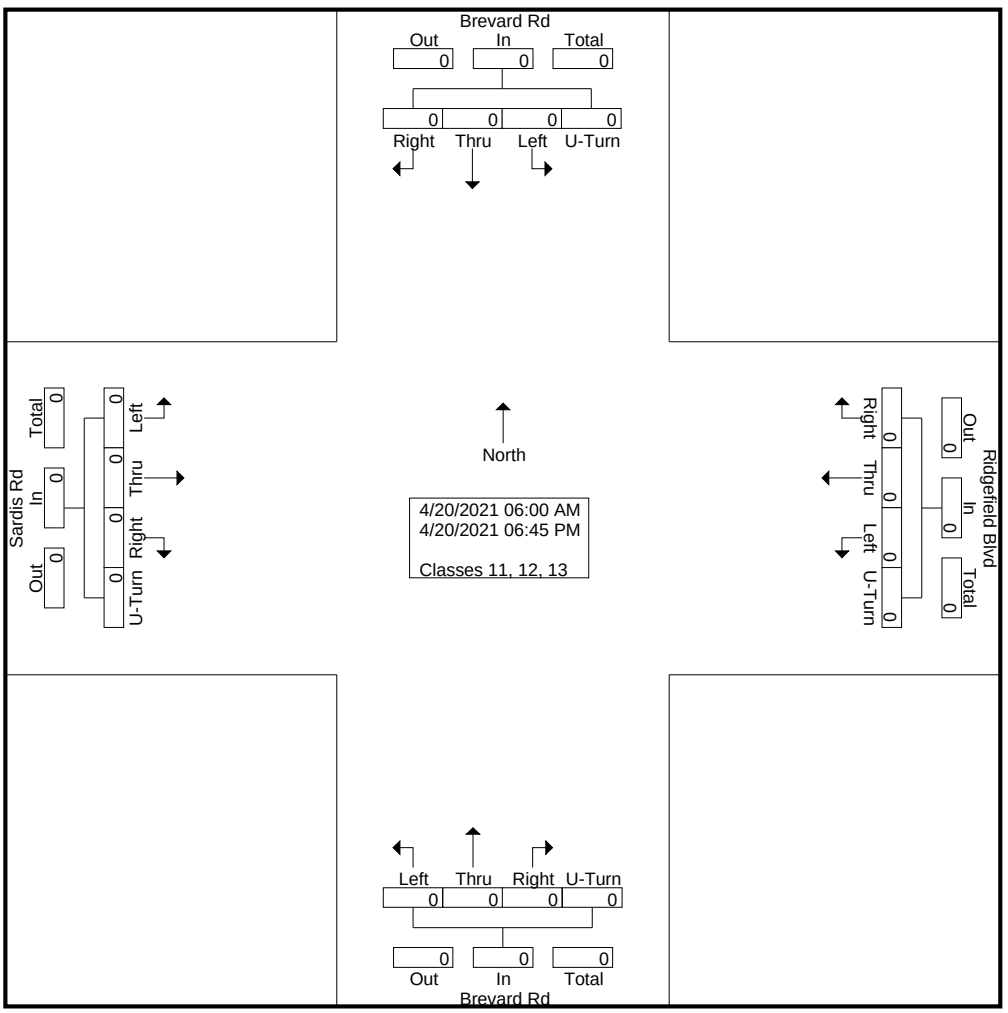

DocuSign Envelope ID: 5C03745C-4B01-4834-A65D-B77F558A4F46

Quality Counts

920 Blairhill Rd, Ste B-106
Charlotte, NC 28217

File Name : 15411706 - Brevard Rd -- Sardis Rd_Ridgefield Blvd
Site Code : 15411706
Start Date : 4/20/2021
Page No : 3

	Brevard Rd Southbound					Ridgefield Blvd Westbound					Brevard Rd Northbound					Sardis Rd Eastbound					
Start Time	Left	Thru	Right	U-Turn	App. Total	Left	Thru	Right	U-Turn	App. Total	Left	Thru	Right	U-Turn	App. Total	Left	Thru	Right	U-Turn	App. Total	Int. Total
Peak Hour Analysis From 06:00 AM to 11:45 AM - Peak 1 of 1																					
Peak Hour for Entire Intersection Begins at 06:00 AM																					
06:00 AM	0	0	0	0	0	0	0	0	0	0	0	0	0	0	0	0	0	0	0	0	0
06:15 AM	0	0	0	0	0	0	0	0	0	0	0	0	0	0	0	0	0	0	0	0	0
06:30 AM	0	0	0	0	0	0	0	0	0	0	0	0	0	0	0	0	0	0	0	0	0
06:45 AM	0	0	0	0	0	0	0	0	0	0	0	0	0	0	0	0	0	0	0	0	0
Total Volume	0	0	0	0	0	0	0	0	0	0	0	0	0	0	0	0	0	0	0	0	0
% App. Total	0	0	0	0		0	0	0	0		0	0	0	0		0	0	0	0		
PHF	.000	.000	.000	.000	.000	.000	.000	.000	.000	.000	.000	.000	.000	.000	.000	.000	.000	.000	.000	.000	.000

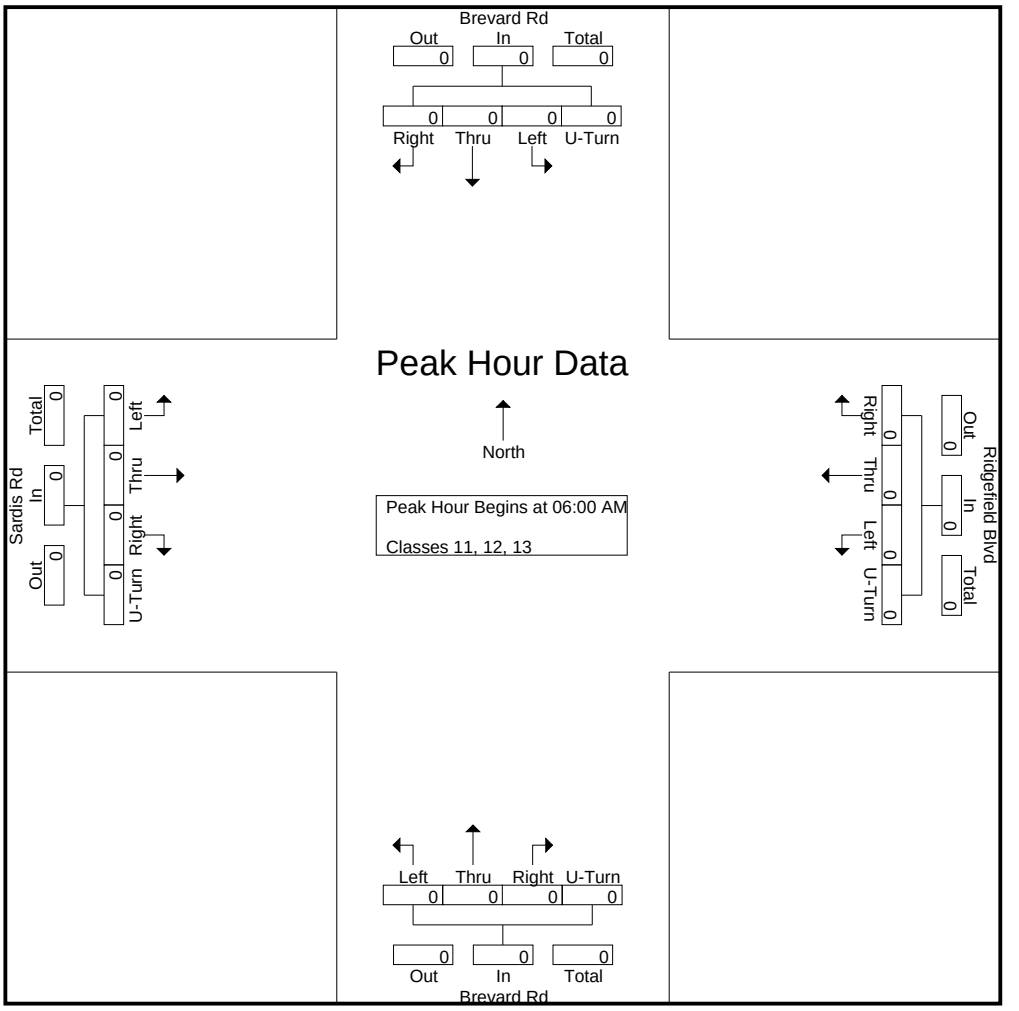

DocuSign Envelope ID: 5C03745C-4B01-4834-A65D-B77F558A4F46

Quality Counts

920 Blairhill Rd, Ste B-106
Charlotte, NC 28217

File Name : 15411706 - Brevard Rd -- Sardis Rd_Ridgefield Blvd
Site Code : 15411706
Start Date : 4/20/2021

	Brevard Rd Southbound					Ridgefield Blvd Westbound					Brevard Rd Northbound					Sardis Rd Eastbound					
Start Time	Left	Thru	Right	U-Turn	App. Total	Left	Thru	Right	U-Turn	App. Total	Left	Thru	Right	U-Turn	App. Total	Left	Thru	Right	U-Turn	App. Total	Int. Total
Peak Hour Analysis From 12:00 PM to 06:45 PM - Peak 1 of 1																					
Peak Hour for Entire Intersection Begins at 12:00 PM																					
12:00 PM	0	0	0	0	0	0	0	0	0	0	0	0	0	0	0	0	0	0	0	0	0
12:15 PM	0	0	0	0	0	0	0	0	0	0	0	0	0	0	0	0	0	0	0	0	0
12:30 PM	0	0	0	0	0	0	0	0	0	0	0	0	0	0	0	0	0	0	0	0	0
12:45 PM	0	0	0	0	0	0	0	0	0	0	0	0	0	0	0	0	0	0	0	0	0
Total Volume	0	0	0	0	0	0	0	0	0	0	0	0	0	0	0	0	0	0	0	0	0
% App. Total	0	0	0	0		0	0	0	0		0	0	0	0		0	0	0	0		
PHF	.000	.000	.000	.000	.000	.000	.000	.000	.000	.000	.000	.000	.000	.000	.000	.000	.000	.000	.000	.000	.000

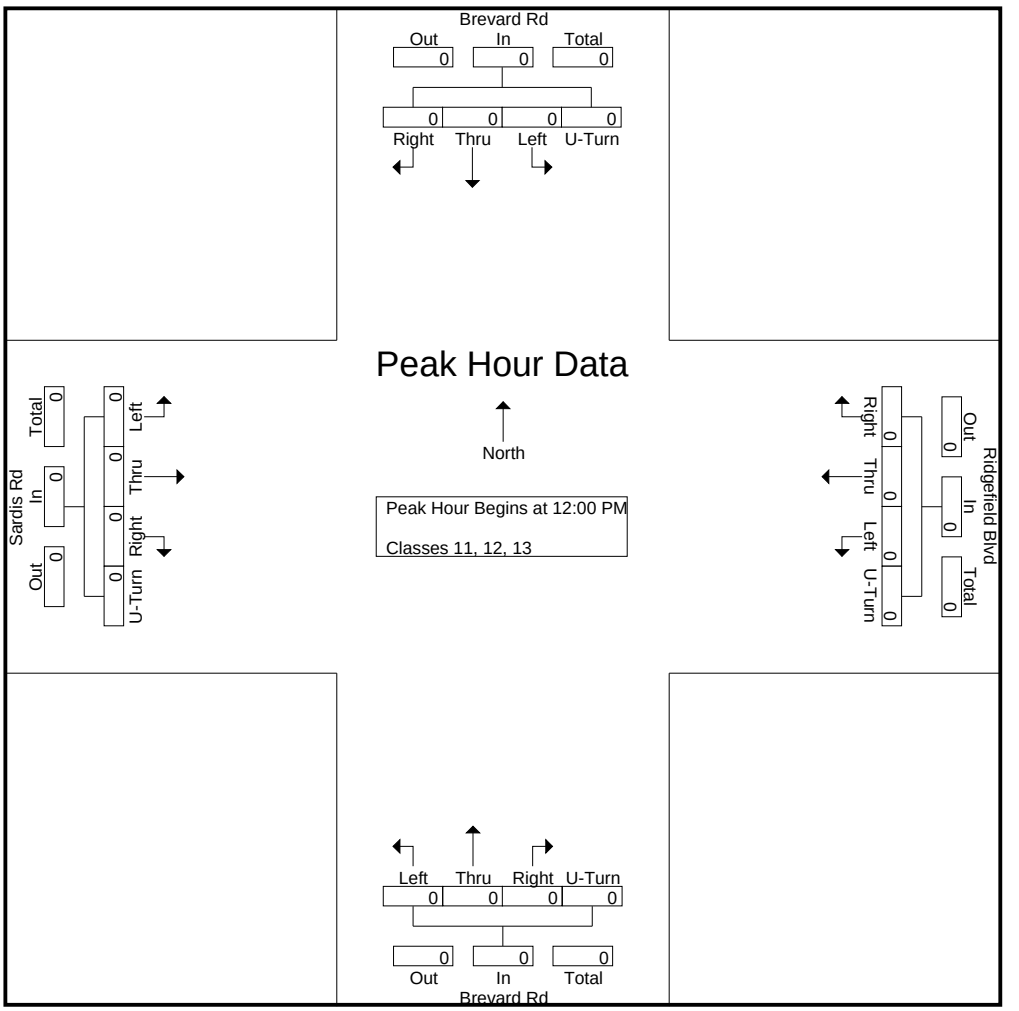

DocuSign Envelope ID: 5C03745C-4B01-4834-A65D-B77F558A4F46

Quality Counts

920 Blairhill Rd, Ste B-106
Charlotte, NC 28217

File Name : 15411706 - Brevard Rd -- Sardis Rd_Ridgefield Blvd
Site Code : 15411706
Start Date : 4/20/2021
Page No : 1

Groups Printed- Bikes, Peds

	Brevard Rd Southbound					Ridgefield Blvd Westbound					Brevard Rd Northbound					Sardis Rd Eastbound					
Start Time	Left	Thru	Right	Peds	App. Total	Left	Thru	Right	Peds	App. Total	Left	Thru	Right	Peds	App. Total	Left	Thru	Right	Peds	App. Total	Int. Total
06:00 AM	0	0	0	0	0	0	0	0	0	0	0	0	0	0	0	0	0	0	0	0	0
06:15 AM	0	0	0	0	0	0	0	0	0	0	0	0	0	0	0	0	0	0	0	0	0
06:30 AM	0	0	0	0	0	0	0	0	0	0	0	0	0	0	0	0	0	0	0	0	0
06:45 AM	0	0	0	0	0	0	0	0	0	0	0	0	0	0	0	0	0	0	0	0	0
Total	0	0	0	0	0	0	0	0	0	0	0	0	0	0	0	0	0	0	0	0	0
07:00 AM	0	0	0	0	0	0	0	0	0	0	0	0	0	0	0	0	0	0	0	0	0
07:15 AM	0	0	0	0	0	0	0	0	0	0	0	0	0	0	0	0	0	0	0	0	0
07:30 AM	0	0	0	0	0	0	0	0	0	0	0	0	0	0	0	0	0	0	0	0	0
07:45 AM	0	0	0	0	0	0	0	0	0	0	0	0	0	0	0	0	0	0	0	0	0
Total	0	0	0	0	0	0	0	0	0	0	0	0	0	0	0	0	0	0	0	0	0
08:00 AM	0	0	0	0	0	0	0	0	1	1	0	0	0	0	0	0	0	0	1	1	2
08:15 AM	0	0	0	0	0	0	0	0	0	0	0	0	0	0	0	0	0	0	0	0	0
08:30 AM	0	0	0	0	0	0	0	0	0	0	0	0	0	0	0	0	0	0	0	0	0
08:45 AM	0	0	0	0	0	0	0	0	0	0	0	0	0	0	0	0	0	0	0	0	0
Total	0	0	0	0	0	0	0	0	1	1	0	0	0	0	0	0	0	0	1	1	2
09:00 AM	0	0	0	0	0	0	0	0	0	0	0	0	0	0	0	0	0	0	0	0	0
09:15 AM	0	0	0	0	0	0	0	0	0	0	0	0	0	0	0	0	0	0	0	0	0
09:30 AM	0	0	0	0	0	0	0	0	0	0	0	0	0	0	0	0	0	0	0	0	0
09:45 AM	0	0	0	0	0	0	0	0	1	1	0	0	0	0	0	0	0	0	0	0	1
Total	0	0	0	0	0	0	0	0	1	1	0	0	0	0	0	0	0	0	0	0	1
10:00 AM	0	0	0	0	0	0	0	0	0	0	0	0	0	0	0	0	0	0	0	0	0
10:15 AM	0	0	0	0	0	0	0	0	0	0	0	0	0	0	0	0	0	0	0	0	0
10:30 AM	0	0	0	0	0	0	0	0	0	0	0	0	0	0	0	0	0	0	0	0	0
10:45 AM	0	0	0	0	0	0	0	0	0	0	0	0	0	0	0	0	0	0	1	1	1
Total	0	0	0	0	0	0	0	0	0	0	0	0	0	0	0	0	0	0	1	1	1
11:00 AM	0	0	0	0	0	0	0	0	0	0	0	0	0	0	0	0	0	0	0	0	0
11:15 AM	0	0	0	0	0	0	0	0	0	0	0	0	0	0	0	0	0	0	0	0	0
11:30 AM	0	1	0	0	1	0	0	0	0	0	0	0	0	0	0	0	0	0	0	0	1
11:45 AM	0	0	0	0	0	0	0	0	0	0	0	0	0	0	0	0	0	0	0	0	0
Total	0	1	0	0	1	0	0	0	0	0	0	0	0	0	0	0	0	0	0	0	1
12:00 PM	0	0	0	0	0	0	0	0	0	0	0	0	0	0	0	0	0	0	0	0	0
12:15 PM	0	0	0	0	0	0	0	0	0	0	0	0	0	0	0	0	0	0	0	0	0
12:30 PM	0	0	0	0	0	0	0	0	0	0	0	0	0	0	0	0	0	0	0	0	0
12:45 PM	0	0	0	0	0	0	0	0	0	0	0	1	0	0	1	0	0	0	0	0	1
Total	0	0	0	0	0	0	0	0	0	0	0	1	0	0	1	0	0	0	0	0	1
01:00 PM	0	0	0	0	0	0	0	0	0	0	0	0	0	0	0	0	0	0	0	0	0
01:15 PM	0	0	0	0	0	0	0	0	0	0	0	0	0	0	0	0	0	0	0	0	0
01:30 PM	0	0	0	0	0	0	0	0	0	0	0	0	0	0	0	0	0	0	0	0	0
01:45 PM	0	0	0	0	0	0	0	0	0	0	0	0	0	0	0	0	0	0	0	0	0
Total	0	0	0	0	0	0	0	0	0	0	0	0	0	0	0	0	0	0	0	0	0
02:00 PM	0	0	0	0	0	0	0	0	0	0	0	0	0	0	0	0	0	0	0	0	0
02:15 PM	0	0	0	0	0	0	0	0	0	0	0	0	0	0	0	0	0	0	0	0	0
02:30 PM	0	0	0	0	0	0	0	0	0	0	0	0	0	0	0	0	0	0	0	0	0
02:45 PM	0	0	0	0	0	0	0	0	0	0	0	0	0	0	0	0	0	0	0	0	0
Total	0	0	0	0	0	0	0	0	0	0	0	0	0	0	0	0	0	0	0	0	0
03:00 PM	0	0	0	0	0	0	0	0	0	0	0	0	0	0	0	0	0	0	0	0	0
03:15 PM	0	0	0	0	0	0	0	0	0	0	0	0	0	0	0	0	0	0	0	0	0
03:30 PM	0	0	0	0	0	0	0	0	0	0	0	0	0	1	1	0	0	0	0	0	1

DocuSign Envelope ID: 5C03745C-4B01-4834-A65D-B77F558A4F46

Quality Counts

920 Blairhill Rd, Ste B-106
Charlotte, NC 28217

File Name : 15411706 - Brevard Rd -- Sardis Rd_Ridgefield Blvd
Site Code : 15411706
Start Date : 4/20/2021

Groups Printed- Bikes, Peds

	Brevard Rd Southbound					Ridgefield Blvd Westbound					Brevard Rd Northbound					Sardis Rd Eastbound					
Start Time	Left	Thru	Right	Peds	App. Total	Left	Thru	Right	Peds	App. Total	Left	Thru	Right	Peds	App. Total	Left	Thru	Right	Peds	App. Total	Int. Total
03:45 PM	0	0	0	0	0	0	0	0	0	0	0	0	0	0	0	0	0	0	0	0	0
Total	0	0	0	0	0	0	0	0	0	0	0	0	0	1	1	0	0	0	0	0	1
04:00 PM	0	0	0	0	0	0	0	0	0	0	0	0	0	0	0	0	0	0	0	0	0
04:15 PM	0	0	0	0	0	0	0	0	0	0	0	0	0	0	0	0	0	0	0	0	0
04:30 PM	0	0	0	0	0	0	0	0	0	0	0	0	0	0	0	0	0	0	0	0	0
04:45 PM	0	0	0	0	0	0	0	0	1	1	0	0	0	0	0	0	0	0	0	0	1
Total	0	0	0	0	0	0	0	0	1	1	0	0	0	0	0	0	0	0	0	0	1
05:00 PM	0	0	0	0	0	0	0	0	0	0	0	0	0	0	0	0	0	0	0	0	0
05:15 PM	0	0	0	0	0	0	0	0	0	0	0	0	0	0	0	0	0	0	0	0	0
05:30 PM	0	0	0	0	0	0	0	0	0	0	0	0	0	0	0	0	0	0	0	0	0
05:45 PM	0	0	0	0	0	0	0	0	0	0	0	0	0	0	0	0	0	0	0	0	0
Total	0	0	0	0	0	0	0	0	0	0	0	0	0	0	0	0	0	0	0	0	0
06:00 PM	0	0	0	0	0	0	0	0	0	0	0	0	0	0	0	0	0	1	0	1	1
06:15 PM	0	0	0	0	0	0	0	0	0	0	0	0	0	0	0	0	0	0	0	0	0
06:30 PM	0	0	0	0	0	0	0	0	0	0	0	0	0	0	0	0	0	0	0	0	0
06:45 PM	0	0	0	0	0	0	0	0	1	1	0	0	0	0	0	0	0	0	0	0	1
Total	0	0	0	0	0	0	0	0	1	1	0	0	0	0	0	0	0	1	0	1	2
Grand Total	0	1	0	0	1	0	0	0	4	4	0	1	0	1	2	0	0	1	2	3	10
Apprch %	0	100	0	0		0	0	0	100		0	50	0	50		0	0	33.3	66.7		
Total %	0	10	0	0	10	0	0	0	40	40	0	10	0	10	20	0	0	10	20	30	

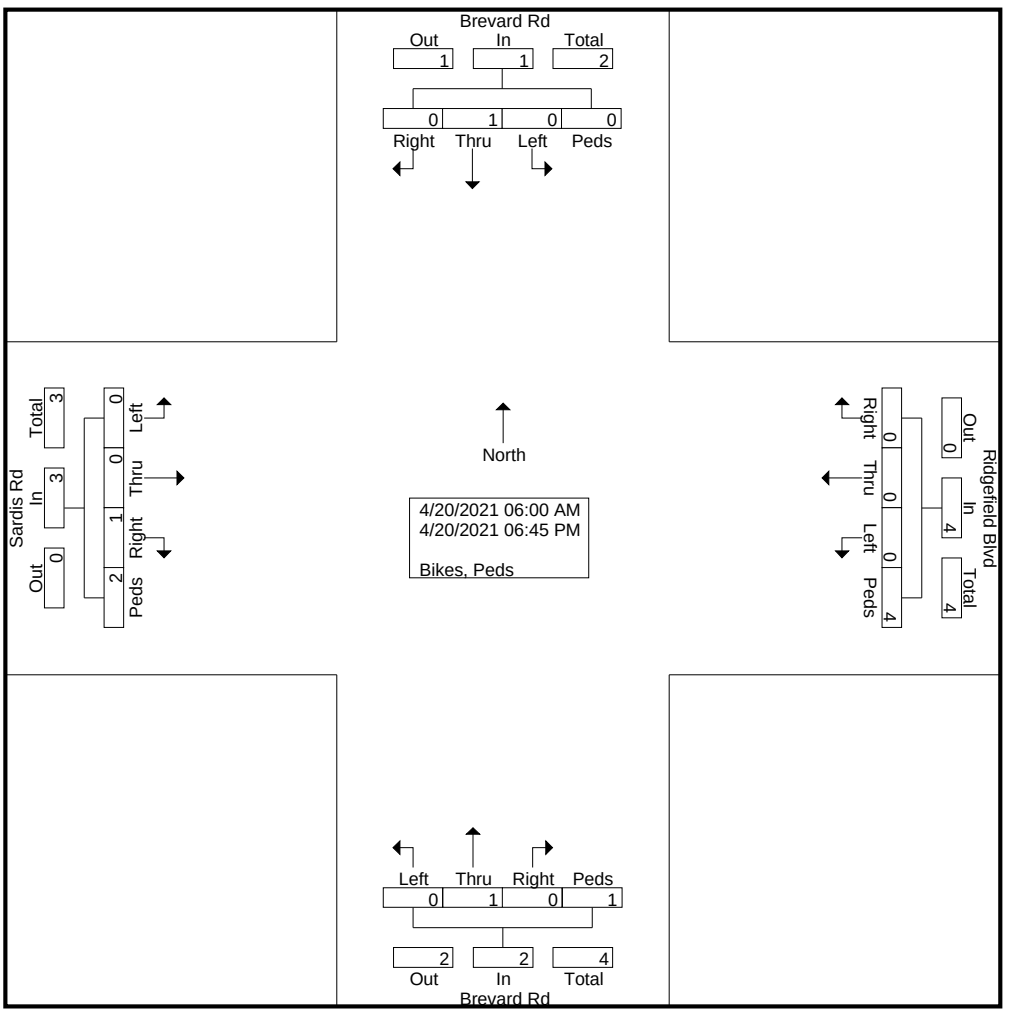

DocuSign Envelope ID: 5C03745C-4B01-4834-A65D-B77F558A4F46

Quality Counts

920 Blairhill Rd, Ste B-106
Charlotte, NC 28217

File Name : 15411706 - Brevard Rd -- Sardis Rd_Ridgefield Blvd
Site Code : 15411706
Start Date : 4/20/2021
Page No : 3

	Brevard Rd Southbound					Ridgefield Blvd Westbound					Brevard Rd Northbound					Sardis Rd Eastbound					
Start Time	Left	Thru	Right	Peds	App. Total	Left	Thru	Right	Peds	App. Total	Left	Thru	Right	Peds	App. Total	Left	Thru	Right	Peds	App. Total	Int. Total
Peak Hour Analysis From 06:00 AM to 11:45 AM - Peak 1 of 1																					
Peak Hour for Entire Intersection Begins at 07:15 AM																					
07:15 AM	0	0	0	0	0	0	0	0	0	0	0	0	0	0	0	0	0	0	0	0	0
07:30 AM	0	0	0	0	0	0	0	0	0	0	0	0	0	0	0	0	0	0	0	0	0
07:45 AM	0	0	0	0	0	0	0	0	0	0	0	0	0	0	0	0	0	0	0	0	0
08:00 AM	0	0	0	0	0	0	0	0	**1**	**1**	0	0	0	0	0	0	0	0	**1**	**1**	**2**
Total Volume	0	0	0	0	0	0	0	0	1	1	0	0	0	0	0	0	0	0	1	1	2
% App. Total	0	0	0	0		0	0	0	100		0	0	0	0		0	0	0	100		
PHF	.000	.000	.000	.000	.000	.000	.000	.000	.250	.250	.000	.000	.000	.000	.000	.000	.000	.000	.250	.250	.250

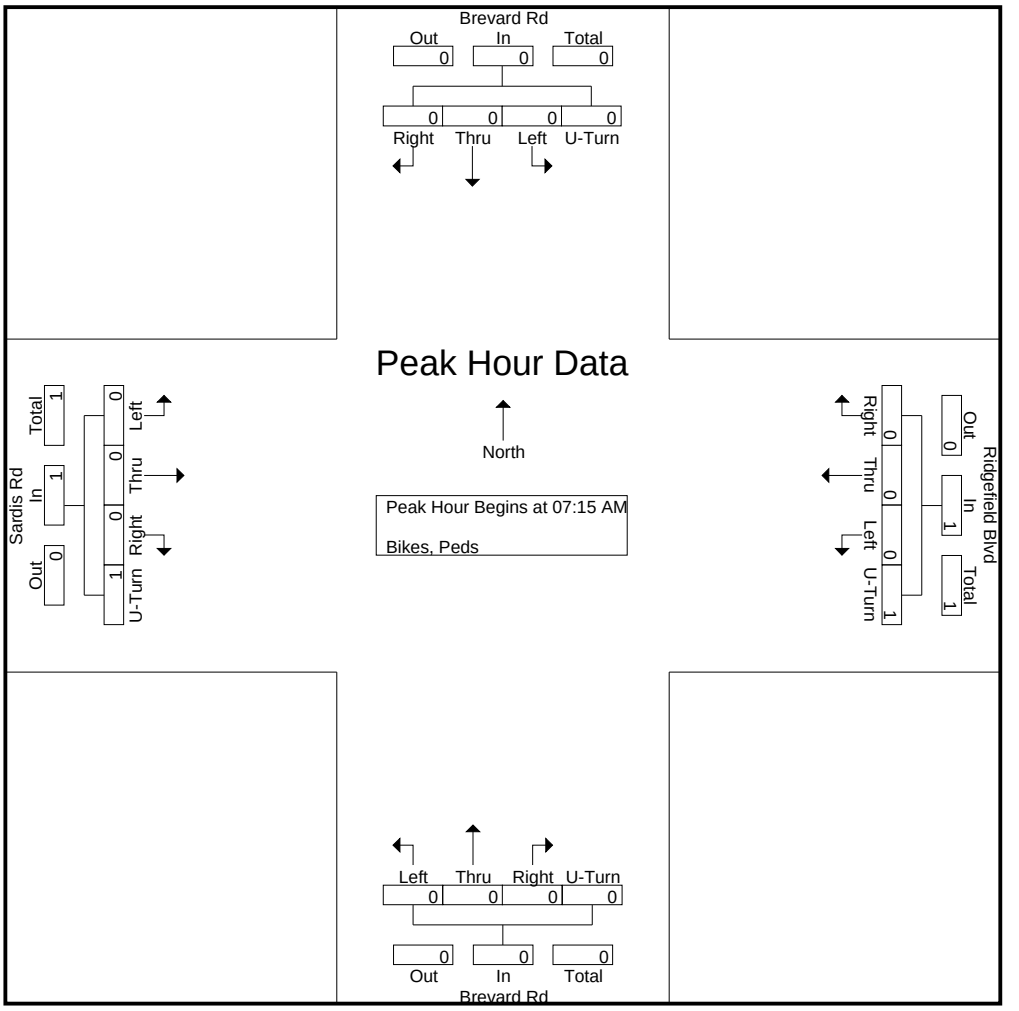

DocuSign Envelope ID: 5C03745C-4B01-4834-A65D-B77F558A4F46

Quality Counts

920 Blairhill Rd, Ste B-106
Charlotte, NC 28217

File Name : 15411706 - Brevard Rd -- Sardis Rd_Ridgefield Blvd
Site Code : 15411706
Start Date : 4/20/2021

	Brevard Rd Southbound					Ridgefield Blvd Westbound					Brevard Rd Northbound					Sardis Rd Eastbound					
Start Time	Left	Thru	Right	Peds	App. Total	Left	Thru	Right	Peds	App. Total	Left	Thru	Right	Peds	App. Total	Left	Thru	Right	Peds	App. Total	Int. Total
Peak Hour Analysis From 12:00 PM to 06:45 PM - Peak 1 of 1																					
Peak Hour for Entire Intersection Begins at 06:00 PM																					
06:00 PM	0	0	0	0	0	0	0	0	0	0	0	0	0	0	0	0	0	**1**	0	**1**	**1**
06:15 PM	0	0	0	0	0	0	0	0	0	0	0	0	0	0	0	0	0	0	0	0	0
06:30 PM	0	0	0	0	0	0	0	0	0	0	0	0	0	0	0	0	0	0	0	0	0
06:45 PM	0	0	0	0	0	0	0	0	**1**	**1**	0	0	0	0	0	0	0	0	0	0	1
Total Volume	0	0	0	0	0	0	0	0	1	1	0	0	0	0	0	0	0	1	0	1	2
% App. Total	0	0	0	0		0	0	0	100		0	0	0	0		0	0	100	0		
PHF	.000	.000	.000	.000	.000	.000	.000	.000	.250	.250	.000	.000	.000	.000	.000	.000	.000	.250	.000	.250	.500

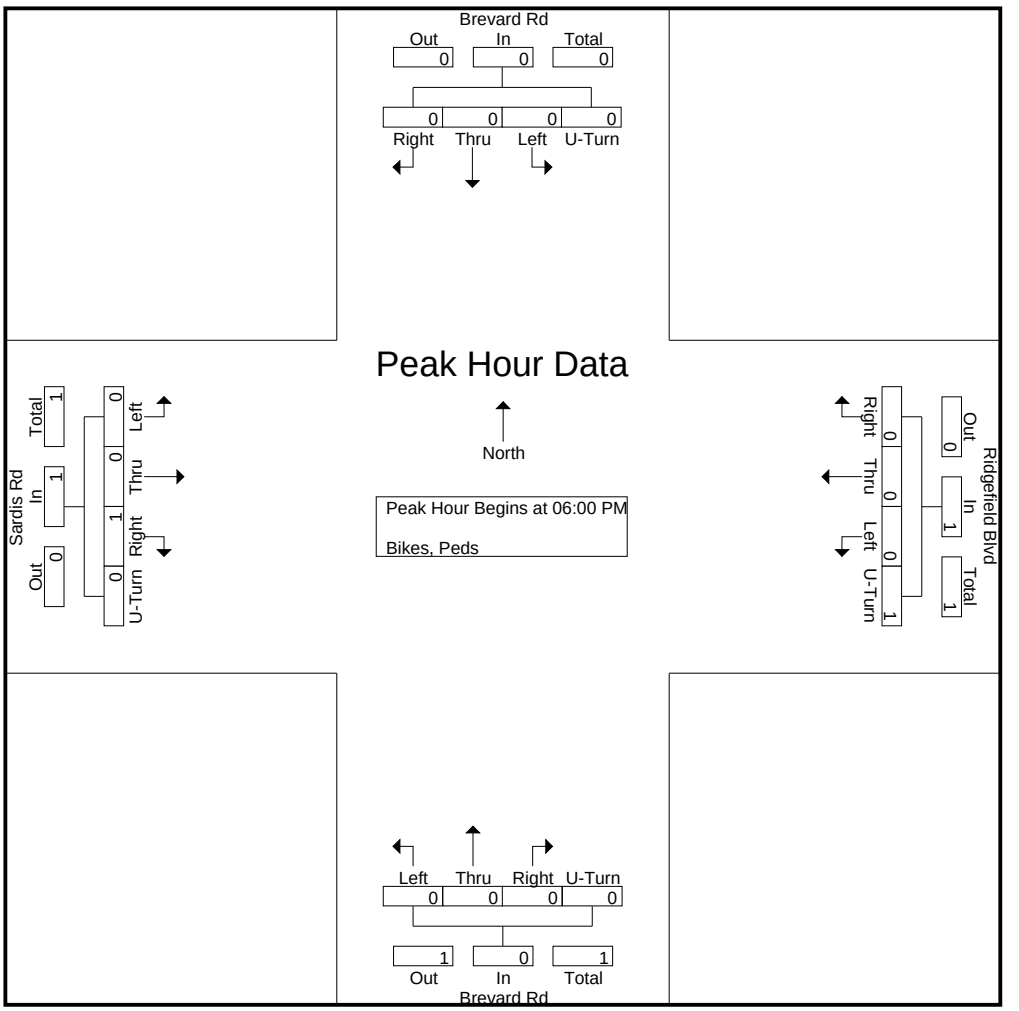

DocuSign Envelope ID: 5C03745C-4B01-4834-A65D-B77F558A4F46

QUALITY COUNTS LLC
920 Blairhill Rd, Suite 106, Charlotte, NC 28217
704.215.4616

Count Number: 15411707
County: Buncombe
City: Asheville
Division: 13

Location: Brevard Rd & Pole Creasman Rd
General Location Type: Intersection
Count Type: Turning Movement (Classification)
Count Start Date: 4/20/2021
Time: 6:00 AM – 7:00 PM
Volume: 19,506

Maximum Temperature: 69° F
Minimum Temperature: 40° F
Precipitation: 0.00 in
Snowfall: 0.0 in
Average Sky Cover: 0.2
Weather Conditions: Clear

1. **School in Session:** Yes
2. **Pedestrians Counted**: Yes
3. **Disabled Pedestrians Present**: No
   Description and Approaches Used: N/A
4. **Counted By**: Anthony Garguilo
5. **Data Processor**: Jon B
6. **Signal Inventory**: N/A
7. **Data Collection Method**: Video/Count Board
8. **Equipment Operating Properly**: Yes
9. **Area Lighting Present**: Yes
10. **Nearest Roadway Stop Sign < 300 ft:** No
    If yes, list approaches: N/A
11. **Nearest Traffic Signal < 300 ft:** No
    If yes, list approaches: N/A
12. **At-Grade Railroad Crossing Present (<200 ft):** No
    If yes, list approaches & distance: N/A
13. **Other:**

↑ North

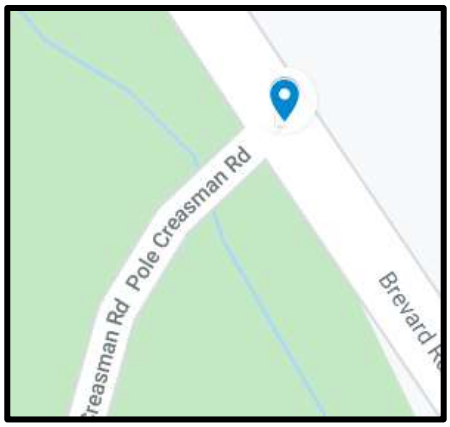

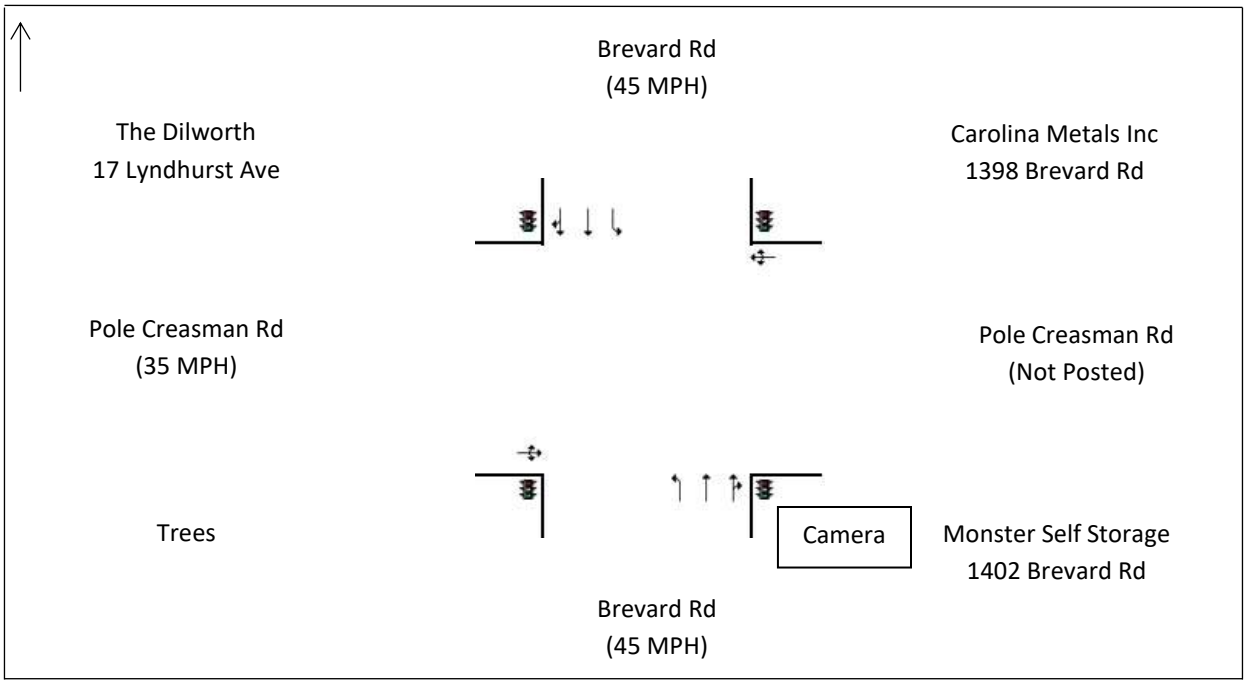

DocuSign Envelope ID: 5C03745C-4B01-4834-A65D-B77F558A4F46

Quality Counts

920 Blairhill Rd, Ste B-106
Charlotte, NC 28217

File Name : 15411707 - Brevard Rd -- Pole Creasman Rd
Site Code : 15411707
Start Date : 4/20/2021
Page No : 1

Groups Printed- Classes 1, 2, 3 - Classes 4, 5, 6, 7 - Classes 8, 9, 10 - Classes 11, 12, 13

	Brevard Rd Southbound					Pole Creasman Rd Westbound					Brevard Rd Northbound					Pole Creasman Rd Eastbound					
Start Time	Left	Thru	Right	U-Turn	App. Total	Left	Thru	Right	U-Turn	App. Total	Left	Thru	Right	U-Turn	App. Total	Left	Thru	Right	U-Turn	App. Total	Int. Total
06:00 AM	0	55	1	0	56	0	0	0	0	0	0	34	1	0	35	5	0	0	0	5	96
06:15 AM	0	86	4	0	90	0	0	0	0	0	0	61	0	0	61	4	0	3	0	7	158
06:30 AM	0	128	0	0	128	0	0	0	0	0	0	88	0	0	88	14	0	5	0	19	235
06:45 AM	3	148	3	0	154	0	0	0	0	0	0	94	0	0	94	12	0	3	0	15	263
Total	3	417	8	0	428	0	0	0	0	0	0	277	1	0	278	35	0	11	0	46	752
07:00 AM	0	140	3	0	143	0	0	0	0	0	1	124	0	0	125	28	0	2	0	30	298
07:15 AM	2	137	6	0	145	0	0	0	0	0	2	151	0	0	153	39	0	3	0	42	340
07:30 AM	0	195	2	0	197	0	0	0	0	0	0	171	0	0	171	32	0	3	0	35	403
07:45 AM	0	157	11	0	168	0	0	0	0	0	0	196	1	0	197	25	0	5	0	30	395
Total	2	629	22	0	653	0	0	0	0	0	3	642	1	0	646	124	0	13	0	137	1436
08:00 AM	0	161	17	0	178	0	0	0	0	0	1	197	1	0	199	21	0	2	0	23	400
08:15 AM	0	182	9	0	191	0	0	0	0	0	3	159	1	0	163	17	0	3	0	20	374
08:30 AM	0	147	6	0	153	0	0	0	0	0	0	165	0	0	165	21	0	3	0	24	342
08:45 AM	0	182	7	0	189	0	0	0	0	0	1	143	0	0	144	19	0	2	0	21	354
Total	0	672	39	0	711	0	0	0	0	0	5	664	2	0	671	78	0	10	0	88	1470
09:00 AM	0	127	8	0	135	0	0	0	0	0	0	112	0	0	112	16	0	2	0	18	265
09:15 AM	0	131	5	0	136	0	0	0	0	0	0	99	0	0	99	12	0	1	0	13	248
09:30 AM	0	113	12	0	125	0	0	0	0	0	2	136	0	0	138	18	0	3	0	21	284
09:45 AM	0	135	10	0	145	0	0	0	0	0	1	125	0	0	126	6	0	2	0	8	279
Total	0	506	35	0	541	0	0	0	0	0	3	472	0	0	475	52	0	8	0	60	1076
10:00 AM	0	117	16	0	133	0	0	0	0	0	1	130	0	0	131	8	0	2	0	10	274
10:15 AM	0	121	10	0	131	0	0	0	0	0	0	126	0	0	126	14	0	4	0	18	275
10:30 AM	0	144	7	0	151	0	0	0	0	0	3	127	0	0	130	15	0	1	0	16	297
10:45 AM	1	159	8	0	168	0	0	0	0	0	3	144	0	0	147	10	0	5	0	15	330
Total	1	541	41	0	583	0	0	0	0	0	7	527	0	0	534	47	0	12	0	59	1176
11:00 AM	0	146	9	0	155	0	0	0	0	0	5	142	0	0	147	15	0	0	0	15	317
11:15 AM	1	143	14	0	158	0	0	0	0	0	3	148	1	0	152	16	0	0	0	16	326
11:30 AM	0	130	11	0	141	0	0	0	0	0	3	152	1	0	156	16	0	5	0	21	318
11:45 AM	0	179	8	0	187	0	0	0	0	0	2	174	0	0	176	7	0	1	0	8	371
Total	1	598	42	0	641	0	0	0	0	0	13	616	2	0	631	54	0	6	0	60	1332
12:00 PM	2	166	15	0	183	0	0	1	0	1	1	153	0	0	154	16	0	4	0	20	358
12:15 PM	0	163	18	0	181	0	0	0	0	0	1	168	0	0	169	18	0	1	0	19	369
12:30 PM	1	189	16	0	206	0	0	0	0	0	2	206	0	0	208	9	0	3	0	12	426
12:45 PM	0	168	19	0	187	0	0	0	0	0	0	196	0	0	196	10	0	0	0	10	393
Total	3	686	68	0	757	0	0	1	0	1	4	723	0	0	727	53	0	8	0	61	1546
01:00 PM	0	138	22	0	160	0	0	1	0	1	3	180	0	0	183	12	0	2	0	14	358
01:15 PM	0	161	9	0	170	0	0	0	0	0	2	171	1	0	174	13	0	1	0	14	358
01:30 PM	0	177	14	0	191	0	0	0	0	0	2	170	1	0	173	16	0	7	0	23	387
01:45 PM	0	183	11	1	195	0	0	0	0	0	2	182	0	0	184	20	0	0	0	20	399
Total	0	659	56	1	716	0	0	1	0	1	9	703	2	0	714	61	0	10	0	71	1502
02:00 PM	0	196	9	0	205	0	0	0	0	0	5	150	0	0	155	17	0	1	0	18	378
02:15 PM	0	213	16	0	229	0	0	0	0	0	3	201	1	0	205	16	0	5	0	21	455
02:30 PM	0	199	22	0	221	0	0	0	0	0	3	225	0	0	228	11	0	5	0	16	465
02:45 PM	1	179	21	0	201	0	0	0	0	0	3	255	0	0	258	18	0	5	0	23	482
Total	1	787	68	0	856	0	0	0	0	0	14	831	1	0	846	62	0	16	0	78	1780
03:00 PM	0	177	20	0	197	0	0	0	0	0	0	235	0	0	235	16	0	2	0	18	450
03:15 PM	0	216	24	0	240	0	0	1	0	1	2	286	0	0	288	18	0	1	0	19	548
03:30 PM	0	180	36	0	216	1	0	0	0	1	5	235	0	0	240	13	0	5	0	18	475

DocuSign Envelope ID: 5C03745C-4B01-4834-A65D-B77F558A4F46

Quality Counts

920 Blairhill Rd, Ste B-106
Charlotte, NC 28217

File Name : 15411707 - Brevard Rd -- Pole Creasman Rd
Site Code : 15411707
Start Date : 4/20/2021

Groups Printed- Classes 1, 2, 3 - Classes 4, 5, 6, 7 - Classes 8, 9, 10 - Classes 11, 12, 13

	Brevard Rd Southbound					Pole Creasman Rd Westbound					Brevard Rd Northbound					Pole Creasman Rd Eastbound					
Start Time	Left	Thru	Right	U-Turn	App. Total	Left	Thru	Right	U-Turn	App. Total	Left	Thru	Right	U-Turn	App. Total	Left	Thru	Right	U-Turn	App. Total	Int. Total
03:45 PM	0	185	30	0	215	0	0	0	0	0	4	253	0	0	257	24	1	3	0	28	500
Total	0	758	110	0	868	1	0	1	0	2	11	1009	0	0	1020	71	1	11	0	83	1973
04:00 PM	0	257	16	0	273	0	0	1	0	1	1	259	0	0	260	19	0	3	0	22	556
04:15 PM	0	205	27	0	232	0	0	0	0	0	3	244	0	0	247	16	0	3	0	19	498
04:30 PM	0	234	23	0	257	5	0	0	0	5	2	257	0	0	259	15	0	1	0	16	537
04:45 PM	0	171	30	0	201	0	0	0	0	0	4	261	0	0	265	15	0	2	0	17	483
Total	0	867	96	0	963	5	0	1	0	6	10	1021	0	0	1031	65	0	9	0	74	2074
05:00 PM	0	222	20	0	242	0	0	0	0	0	5	245	0	0	250	15	0	4	0	19	511
05:15 PM	0	187	29	0	216	0	0	0	0	0	2	285	0	1	288	15	0	3	0	18	522
05:30 PM	0	181	25	0	206	0	0	0	0	0	6	271	0	0	277	24	0	4	0	28	511
05:45 PM	0	194	23	0	217	0	0	0	0	0	3	221	0	0	224	25	0	10	0	35	476
Total	0	784	97	0	881	0	0	0	0	0	16	1022	0	1	1039	79	0	21	0	100	2020
06:00 PM	0	165	24	0	189	0	0	0	0	0	1	200	0	0	201	14	0	2	0	16	406
06:15 PM	1	145	20	0	166	0	0	0	0	0	6	161	0	0	167	17	0	2	0	19	352
06:30 PM	0	135	25	0	160	0	0	0	0	0	1	138	0	0	139	9	0	2	0	11	310
06:45 PM	0	106	11	0	117	0	0	0	0	0	0	174	0	0	174	9	0	1	0	10	301
Total	1	551	80	0	632	0	0	0	0	0	8	673	0	0	681	49	0	7	0	56	1369
Grand Total	12	8455	762	1	9230	6	0	4	0	10	103	9180	9	1	9293	830	1	142	0	973	19506
Apprch %	0.1	91.6	8.3	0		60	0	40	0		1.1	98.8	0.1	0		85.3	0.1	14.6	0		
Total %	0.1	43.3	3.9	0	47.3	0	0	0	0	0.1	0.5	47.1	0	0	47.6	4.3	0	0.7	0	5	
Classes 1, 2, 3	12	8036	748	1	8797	6	0	3	0	9	96	8632	8	1	8737	817	0	135	0	952	18495
% Classes 1, 2, 3	100	95	98.2	100	95.3	100	0	75	0	90	93.2	94	88.9	100	94	98.4	0	95.1	0	97.8	94.8
Classes 4, 5, 6, 7	0	352	14	0	366	0	0	1	0	1	7	445	1	0	453	13	1	7	0	21	841
% Classes 4, 5, 6, 7	0	4.2	1.8	0	4	0	0	25	0	10	6.8	4.8	11.1	0	4.9	1.6	100	4.9	0	2.2	4.3
Classes 8, 9, 10	0	67	0	0	67	0	0	0	0	0	0	103	0	0	103	0	0	0	0	0	170
% Classes 8, 9, 10	0	0.8	0	0	0.7	0	0	0	0	0	0	1.1	0	0	1.1	0	0	0	0	0	0.9
Classes 11, 12, 13	0	0	0	0	0	0	0	0	0	0	0	0	0	0	0	0	0	0	0	0	0
% Classes 11, 12, 13	0	0	0	0	0	0	0	0	0	0	0	0	0	0	0	0	0	0	0	0	0

DocuSign Envelope ID: 5C03745C-4B01-4834-A65D-B77F558A4F46

Quality Counts

920 Blairhill Rd, Ste B-106
Charlotte, NC 28217

File Name : 15411707 - Brevard Rd -- Pole Creasman Rd
Site Code : 15411707
Start Date : 4/20/2021
Page No : 3

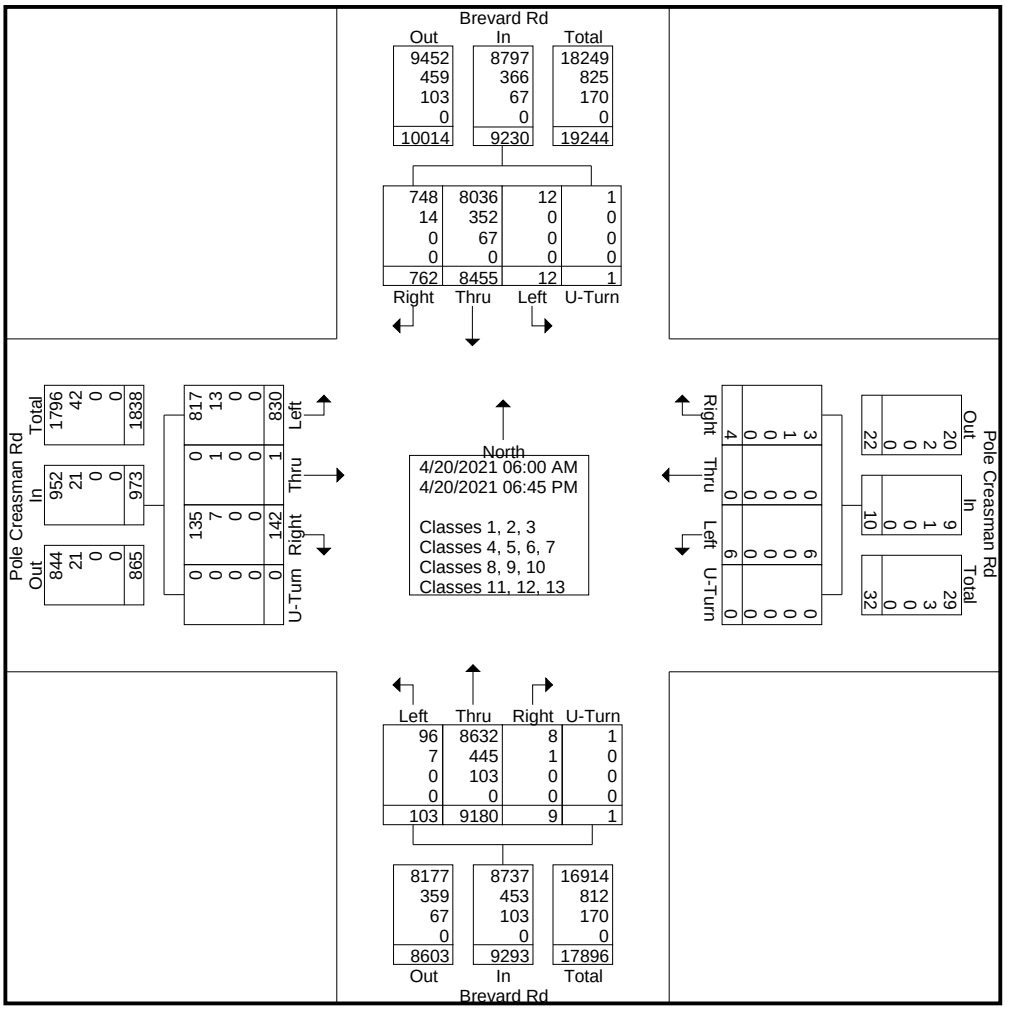

DocuSign Envelope ID: 5C03745C-4B01-4834-A65D-B77F558A4F46

Quality Counts

920 Blairhill Rd, Ste B-106
Charlotte, NC 28217

File Name : 15411707 - Brevard Rd -- Pole Creasman Rd
Site Code : 15411707
Start Date : 4/20/2021
Page No : 4

	Brevard Rd Southbound					Pole Creasman Rd Westbound					Brevard Rd Northbound					Pole Creasman Rd Eastbound					
Start Time	Left	Thru	Right	U-Turn	App. Total	Left	Thru	Right	U-Turn	App. Total	Left	Thru	Right	U-Turn	App. Total	Left	Thru	Right	U-Turn	App. Total	Int. Total
Peak Hour Analysis From 06:00 AM to 11:45 AM - Peak 1 of 1																					
Peak Hour for Entire Intersection Begins at 07:30 AM																					
07:30 AM	0	**195**	2	0	**197**	0	0	0	0	0	0	171	0	0	171	**32**	0	3	0	**35**	**403**
07:45 AM	0	157	11	0	168	0	0	0	0	0	0	196	**1**	0	197	25	0	**5**	0	30	395
08:00 AM	0	161	**17**	0	178	0	0	0	0	0	1	**197**	1	0	**199**	21	0	2	0	23	400
08:15 AM	0	182	9	0	191	0	0	0	0	0	**3**	159	1	0	163	17	0	3	0	20	374
Total Volume	0	695	39	0	734	0	0	0	0	0	4	723	3	0	730	95	0	13	0	108	1572
% App. Total	0	94.7	5.3	0		0	0	0	0		0.5	99	0.4	0		88	0	12	0		
PHF	.000	.891	.574	.000	.931	.000	.000	.000	.000	.000	.333	.918	.750	.000	.917	.742	.000	.650	.000	.771	.975

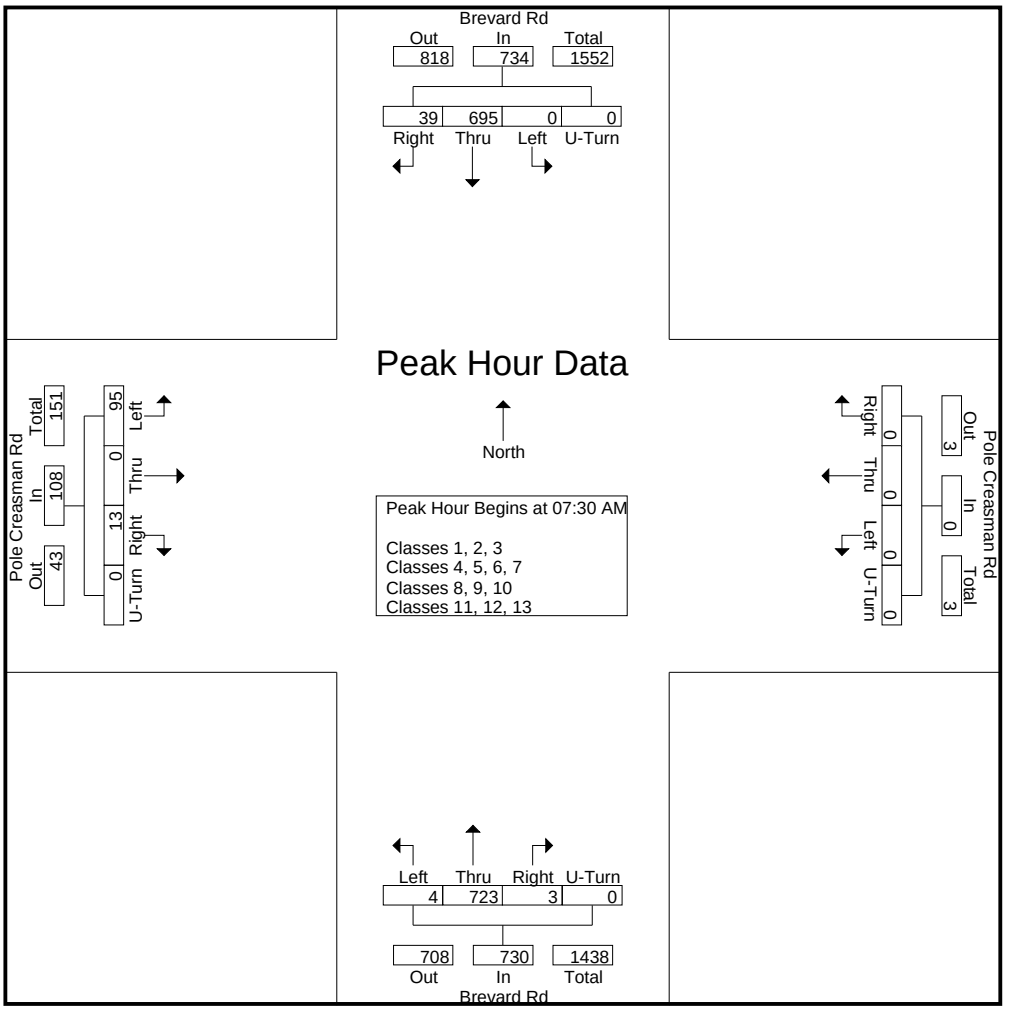

DocuSign Envelope ID: 5C03745C-4B01-4834-A65D-B77F558A4F46

Quality Counts

920 Blairhill Rd, Ste B-106
Charlotte, NC 28217

File Name : 15411707 - Brevard Rd -- Pole Creasman Rd
Site Code : 15411707
Start Date : 4/20/2021
Page No : 5

	Brevard Rd Southbound					Pole Creasman Rd Westbound					Brevard Rd Northbound					Pole Creasman Rd Eastbound					
Start Time	Left	Thru	Right	U-Turn	App. Total	Left	Thru	Right	U-Turn	App. Total	Left	Thru	Right	U-Turn	App. Total	Left	Thru	Right	U-Turn	App. Total	Int. Total
Peak Hour Analysis From 12:00 PM to 06:45 PM - Peak 1 of 1																					
Peak Hour for Entire Intersection Begins at 03:45 PM																					
03:45 PM	0	185	**30**	0	215	0	0	0	0	0	**4**	253	0	0	257	**24**	**1**	**3**	0	**28**	500
04:00 PM	0	**257**	16	0	**273**	0	0	**1**	0	1	1	**259**	0	0	**260**	19	0	3	0	22	**556**
04:15 PM	0	205	27	0	232	0	0	0	0	0	3	244	0	0	247	16	0	3	0	19	498
04:30 PM	0	234	23	0	257	**5**	0	0	0	**5**	2	257	0	0	259	15	0	1	0	16	537
Total Volume	0	881	96	0	977	5	0	1	0	6	10	1013	0	0	1023	74	1	10	0	85	2091
% App. Total	0	90.2	9.8	0		83.3	0	16.7	0		1	99	0	0		87.1	1.2	11.8	0		
PHF	.000	.857	.800	.000	.895	.250	.000	.250	.000	.300	.625	.978	.000	.000	.984	.771	.250	.833	.000	.759	.940

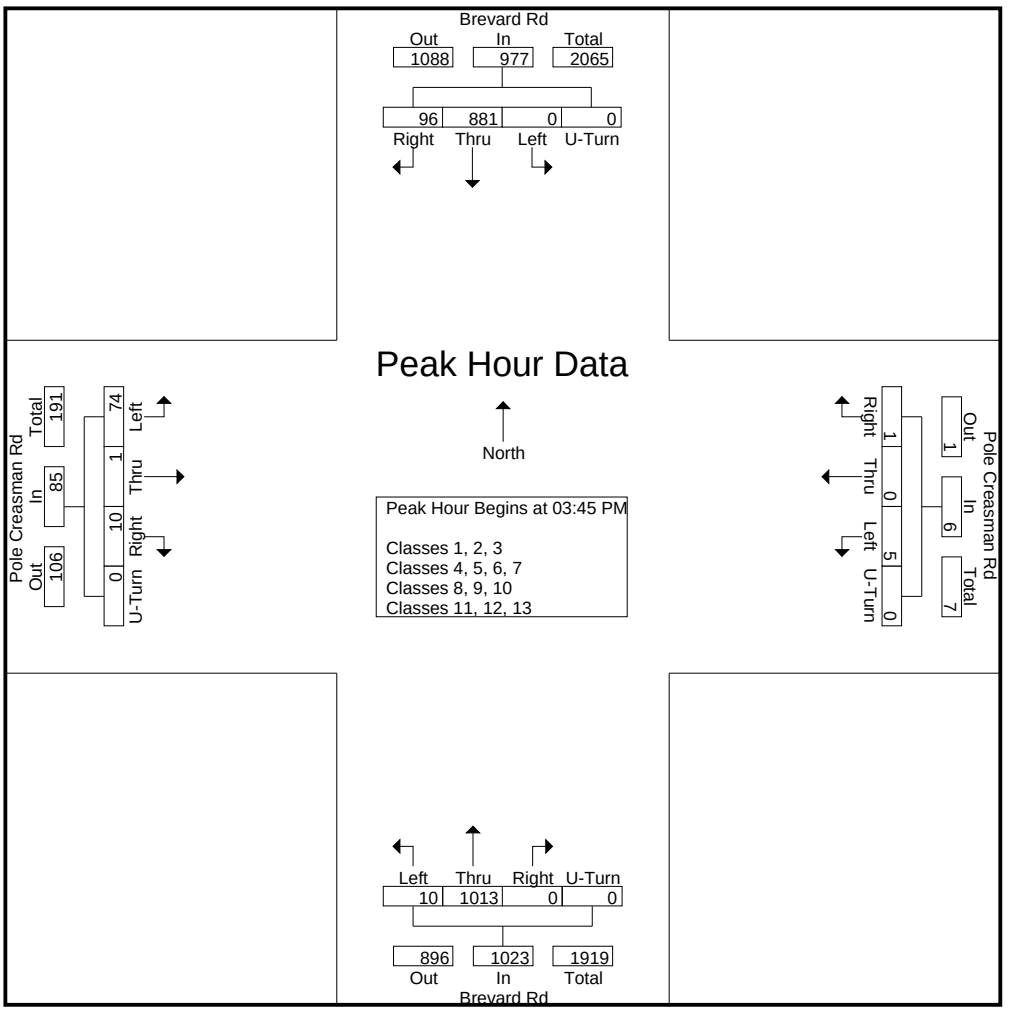

DocuSign Envelope ID: 5C03745C-4B01-4834-A65D-B77F558A4F46

Quality Counts

920 Blairhill Rd, Ste B-106
Charlotte, NC 28217

File Name : 15411707 - Brevard Rd -- Pole Creasman Rd
Site Code : 15411707
Start Date : 4/20/2021
Page No : 1

Groups Printed- Classes 1, 2, 3

	Brevard Rd Southbound					Pole Creasman Rd Westbound					Brevard Rd Northbound					Pole Creasman Rd Eastbound					
Start Time	Left	Thru	Right	U-Turn	App. Total	Left	Thru	Right	U-Turn	App. Total	Left	Thru	Right	U-Turn	App. Total	Left	Thru	Right	U-Turn	App. Total	Int. Total
06:00 AM	0	52	1	0	53	0	0	0	0	0	0	30	1	0	31	5	0	0	0	5	89
06:15 AM	0	82	4	0	86	0	0	0	0	0	0	47	0	0	47	4	0	3	0	7	140
06:30 AM	0	125	0	0	125	0	0	0	0	0	0	82	0	0	82	14	0	4	0	18	225
06:45 AM	3	142	3	0	148	0	0	0	0	0	0	85	0	0	85	12	0	2	0	14	247
Total	3	401	8	0	412	0	0	0	0	0	0	244	1	0	245	35	0	9	0	44	701
07:00 AM	0	133	3	0	136	0	0	0	0	0	1	119	0	0	120	28	0	1	0	29	285
07:15 AM	2	133	4	0	139	0	0	0	0	0	2	144	0	0	146	38	0	3	0	41	326
07:30 AM	0	183	2	0	185	0	0	0	0	0	0	161	0	0	161	32	0	2	0	34	380
07:45 AM	0	148	11	0	159	0	0	0	0	0	0	187	1	0	188	25	0	5	0	30	377
Total	2	597	20	0	619	0	0	0	0	0	3	611	1	0	615	123	0	11	0	134	1368
08:00 AM	0	150	16	0	166	0	0	0	0	0	1	187	1	0	189	21	0	2	0	23	378
08:15 AM	0	174	9	0	183	0	0	0	0	0	3	150	1	0	154	17	0	3	0	20	357
08:30 AM	0	138	5	0	143	0	0	0	0	0	0	157	0	0	157	20	0	3	0	23	323
08:45 AM	0	170	7	0	177	0	0	0	0	0	0	133	0	0	133	19	0	2	0	21	331
Total	0	632	37	0	669	0	0	0	0	0	4	627	2	0	633	77	0	10	0	87	1389
09:00 AM	0	116	8	0	124	0	0	0	0	0	0	101	0	0	101	16	0	2	0	18	243
09:15 AM	0	118	5	0	123	0	0	0	0	0	0	91	0	0	91	12	0	1	0	13	227
09:30 AM	0	107	12	0	119	0	0	0	0	0	2	125	0	0	127	17	0	3	0	20	266
09:45 AM	0	128	9	0	137	0	0	0	0	0	1	116	0	0	117	5	0	2	0	7	261
Total	0	469	34	0	503	0	0	0	0	0	3	433	0	0	436	50	0	8	0	58	997
10:00 AM	0	108	15	0	123	0	0	0	0	0	1	111	0	0	112	7	0	2	0	9	244
10:15 AM	0	109	10	0	119	0	0	0	0	0	0	117	0	0	117	14	0	4	0	18	254
10:30 AM	0	133	7	0	140	0	0	0	0	0	3	117	0	0	120	15	0	1	0	16	276
10:45 AM	1	148	8	0	157	0	0	0	0	0	3	128	0	0	131	10	0	5	0	15	303
Total	1	498	40	0	539	0	0	0	0	0	7	473	0	0	480	46	0	12	0	58	1077
11:00 AM	0	137	9	0	146	0	0	0	0	0	4	131	0	0	135	15	0	0	0	15	296
11:15 AM	1	131	14	0	146	0	0	0	0	0	3	136	1	0	140	15	0	0	0	15	301
11:30 AM	0	122	11	0	133	0	0	0	0	0	3	136	1	0	140	16	0	4	0	20	293
11:45 AM	0	172	8	0	180	0	0	0	0	0	2	166	0	0	168	7	0	1	0	8	356
Total	1	562	42	0	605	0	0	0	0	0	12	569	2	0	583	53	0	5	0	58	1246
12:00 PM	2	161	15	0	178	0	0	1	0	1	1	145	0	0	146	16	0	4	0	20	345
12:15 PM	0	156	18	0	174	0	0	0	0	0	1	159	0	0	160	18	0	1	0	19	353
12:30 PM	1	184	16	0	201	0	0	0	0	0	2	194	0	0	196	9	0	2	0	11	408
12:45 PM	0	158	19	0	177	0	0	0	0	0	0	184	0	0	184	10	0	0	0	10	371
Total	3	659	68	0	730	0	0	1	0	1	4	682	0	0	686	53	0	7	0	60	1477
01:00 PM	0	130	18	0	148	0	0	1	0	1	3	172	0	0	175	12	0	2	0	14	338
01:15 PM	0	154	9	0	163	0	0	0	0	0	1	161	1	0	163	11	0	1	0	12	338
01:30 PM	0	164	14	0	178	0	0	0	0	0	2	155	1	0	158	16	0	7	0	23	359
01:45 PM	0	174	10	1	185	0	0	0	0	0	2	174	0	0	176	20	0	0	0	20	381
Total	0	622	51	1	674	0	0	1	0	1	8	662	2	0	672	59	0	10	0	69	1416
02:00 PM	0	185	9	0	194	0	0	0	0	0	5	141	0	0	146	16	0	1	0	17	357
02:15 PM	0	204	16	0	220	0	0	0	0	0	3	194	0	0	197	16	0	5	0	21	438
02:30 PM	0	187	22	0	209	0	0	0	0	0	3	209	0	0	212	11	0	5	0	16	437
02:45 PM	1	172	21	0	194	0	0	0	0	0	2	242	0	0	244	18	0	5	0	23	461
Total	1	748	68	0	817	0	0	0	0	0	13	786	0	0	799	61	0	16	0	77	1693
03:00 PM	0	166	20	0	186	0	0	0	0	0	0	226	0	0	226	14	0	1	0	15	427
03:15 PM	0	200	24	0	224	0	0	1	0	1	2	268	0	0	270	18	0	1	0	19	514
03:30 PM	0	172	35	0	207	1	0	0	0	1	5	213	0	0	218	13	0	5	0	18	444

DocuSign Envelope ID: 5C03745C-4B01-4834-A65D-B77F558A4F46

Quality Counts

920 Blairhill Rd, Ste B-106
Charlotte, NC 28217

File Name : 15411707 - Brevard Rd -- Pole Creasman Rd
Site Code : 15411707
Start Date : 4/20/2021
Page No : 2

Groups Printed- Classes 1, 2, 3

	Brevard Rd Southbound					Pole Creasman Rd Westbound					Brevard Rd Northbound					Pole Creasman Rd Eastbound					
Start Time	Left	Thru	Right	U-Turn	App. Total	Left	Thru	Right	U-Turn	App. Total	Left	Thru	Right	U-Turn	App. Total	Left	Thru	Right	U-Turn	App. Total	Int. Total
03:45 PM	0	171	29	0	200	0	0	0	0	0	4	239	0	0	243	24	0	3	0	27	470
Total	0	709	108	0	817	1	0	1	0	2	11	946	0	0	957	69	0	10	0	79	1855
04:00 PM	0	245	16	0	261	0	0	0	0	0	0	244	0	0	244	18	0	3	0	21	526
04:15 PM	0	194	27	0	221	0	0	0	0	0	3	233	0	0	236	16	0	3	0	19	476
04:30 PM	0	228	22	0	250	5	0	0	0	5	2	242	0	0	244	15	0	1	0	16	515
04:45 PM	0	168	30	0	198	0	0	0	0	0	4	246	0	0	250	15	0	2	0	17	465
Total	0	835	95	0	930	5	0	0	0	5	9	965	0	0	974	64	0	9	0	73	1982
05:00 PM	0	216	20	0	236	0	0	0	0	0	4	231	0	0	235	15	0	4	0	19	490
05:15 PM	0	181	29	0	210	0	0	0	0	0	2	269	0	1	272	15	0	3	0	18	500
05:30 PM	0	178	25	0	203	0	0	0	0	0	6	266	0	0	272	24	0	4	0	28	503
05:45 PM	0	189	23	0	212	0	0	0	0	0	2	215	0	0	217	25	0	10	0	35	464
Total	0	764	97	0	861	0	0	0	0	0	14	981	0	1	996	79	0	21	0	100	1957
06:00 PM	0	161	24	0	185	0	0	0	0	0	1	192	0	0	193	13	0	2	0	15	393
06:15 PM	1	140	20	0	161	0	0	0	0	0	6	158	0	0	164	17	0	2	0	19	344
06:30 PM	0	134	25	0	159	0	0	0	0	0	1	134	0	0	135	9	0	2	0	11	305
06:45 PM	0	105	11	0	116	0	0	0	0	0	0	169	0	0	169	9	0	1	0	10	295
Total	1	540	80	0	621	0	0	0	0	0	8	653	0	0	661	48	0	7	0	55	1337
Grand Total	12	8036	748	1	8797	6	0	3	0	9	96	8632	8	1	8737	817	0	135	0	952	18495
Apprch %	0.1	91.3	8.5	0		66.7	0	33.3	0		1.1	98.8	0.1	0		85.8	0	14.2	0		
Total %	0.1	43.4	4	0	47.6	0	0	0	0	0	0.5	46.7	0	0	47.2	4.4	0	0.7	0	5.1	

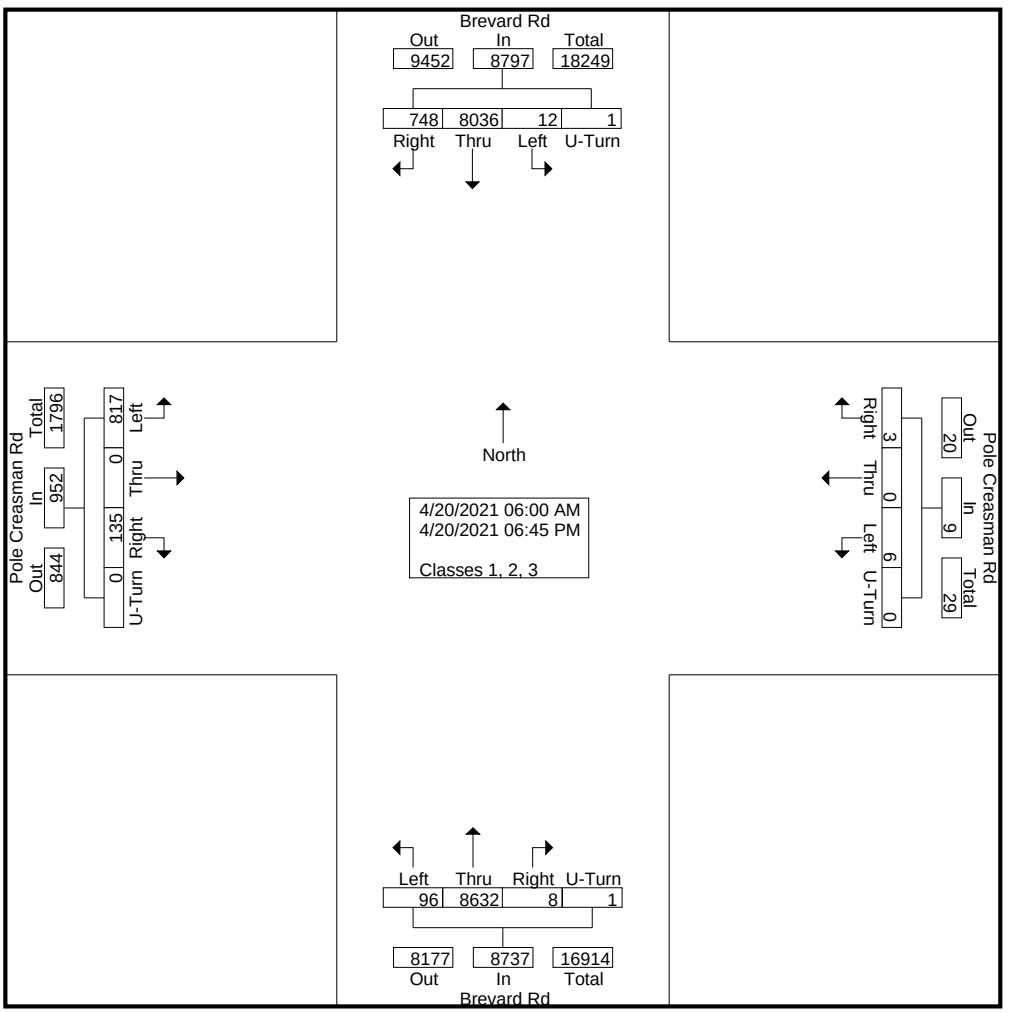

DocuSign Envelope ID: 5C03745C-4B01-4834-A65D-B77F558A4F46

Quality Counts

920 Blairhill Rd, Ste B-106
Charlotte, NC 28217

File Name : 15411707 - Brevard Rd -- Pole Creasman Rd
Site Code : 15411707
Start Date : 4/20/2021
Page No : 3

	Brevard Rd Southbound					Pole Creasman Rd Westbound					Brevard Rd Northbound					Pole Creasman Rd Eastbound					
Start Time	Left	Thru	Right	U-Turn	App. Total	Left	Thru	Right	U-Turn	App. Total	Left	Thru	Right	U-Turn	App. Total	Left	Thru	Right	U-Turn	App. Total	Int. Total
Peak Hour Analysis From 06:00 AM to 11:45 AM - Peak 1 of 1																					
Peak Hour for Entire Intersection Begins at 07:30 AM																					
07:30 AM	0	**183**	2	0	**185**	0	0	0	0	0	0	161	0	0	161	**32**	0	2	0	**34**	**380**
07:45 AM	0	148	11	0	159	0	0	0	0	0	0	**187**	**1**	0	188	25	0	**5**	0	30	377
08:00 AM	0	150	**16**	0	166	0	0	0	0	0	1	187	1	0	**189**	21	0	2	0	23	378
08:15 AM	0	174	9	0	183	0	0	0	0	0	**3**	150	1	0	154	17	0	3	0	20	357
Total Volume	0	655	38	0	693	0	0	0	0	0	4	685	3	0	692	95	0	12	0	107	1492
% App. Total	0	94.5	5.5	0		0	0	0	0		0.6	99	0.4	0		88.8	0	11.2	0		
PHF	.000	.895	.594	.000	.936	.000	.000	.000	.000	.000	.333	.916	.750	.000	.915	.742	.000	.600	.000	.787	.982

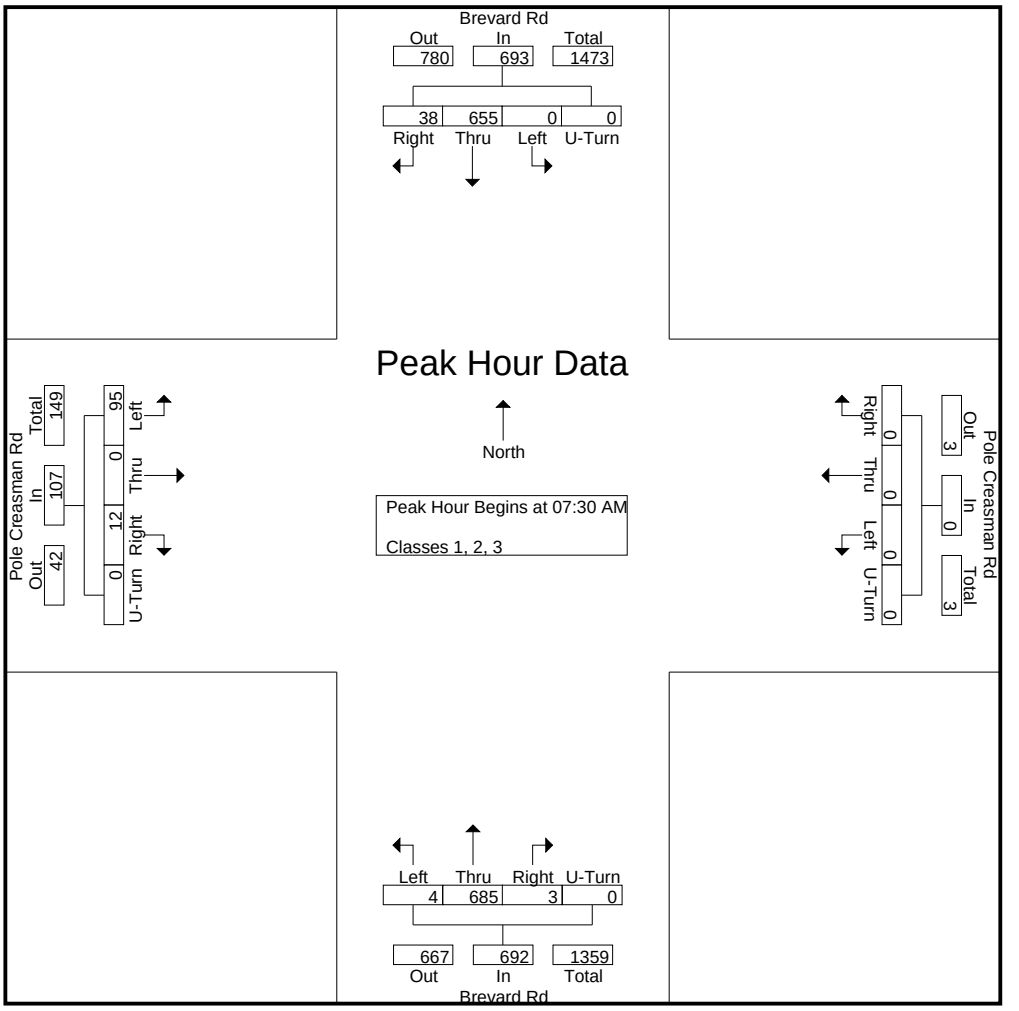

DocuSign Envelope ID: 5C03745C-4B01-4834-A65D-B77F558A4F46

Quality Counts

920 Blairhill Rd, Ste B-106
Charlotte, NC 28217

File Name : 15411707 - Brevard Rd -- Pole Creasman Rd
Site Code : 15411707
Start Date : 4/20/2021
Page No : 4

	Brevard Rd Southbound					Pole Creasman Rd Westbound					Brevard Rd Northbound					Pole Creasman Rd Eastbound					
Start Time	Left	Thru	Right	U-Turn	App. Total	Left	Thru	Right	U-Turn	App. Total	Left	Thru	Right	U-Turn	App. Total	Left	Thru	Right	U-Turn	App. Total	Int. Total
Peak Hour Analysis From 12:00 PM to 06:45 PM - Peak 1 of 1																					
Peak Hour for Entire Intersection Begins at 03:45 PM																					
03:45 PM	0	171	**29**	0	200	0	0	0	0	0	**4**	239	0	0	243	**24**	0	**3**	0	**27**	470
04:00 PM	0	**245**	16	0	**261**	0	0	0	0	0	0	**244**	0	0	**244**	18	0	3	0	21	**526**
04:15 PM	0	194	27	0	221	0	0	0	0	0	3	233	0	0	236	16	0	3	0	19	476
04:30 PM	0	228	22	0	250	**5**	0	0	0	**5**	2	242	0	0	244	15	0	1	0	16	515
Total Volume	0	838	94	0	932	5	0	0	0	5	9	958	0	0	967	73	0	10	0	83	1987
% App. Total	0	89.9	10.1	0		100	0	0	0		0.9	99.1	0	0		88	0	12	0		
PHF	.000	.855	.810	.000	.893	.250	.000	.000	.000	.250	.563	.982	.000	.000	.991	.760	.000	.833	.000	.769	.944

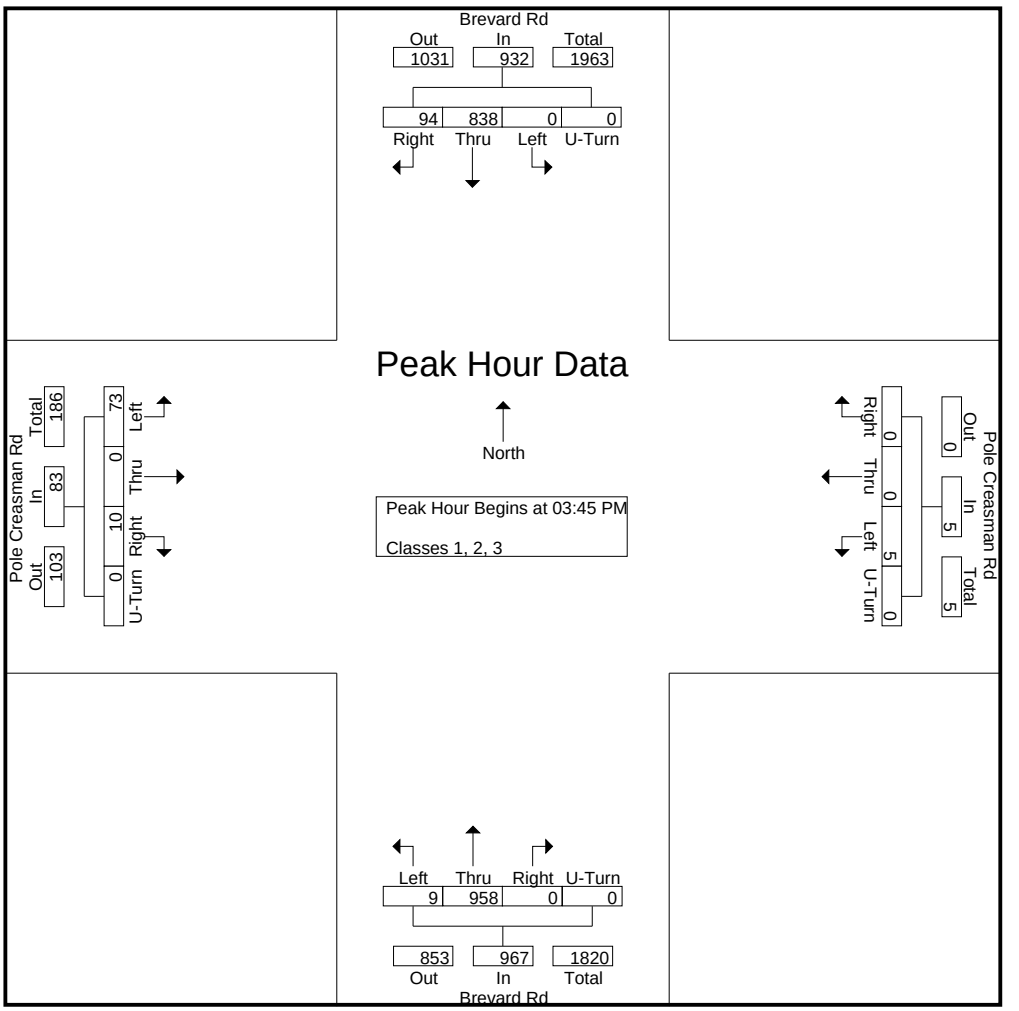

DocuSign Envelope ID: 5C03745C-4B01-4834-A65D-B77F558A4F46

Quality Counts

920 Blairhill Rd, Ste B-106
Charlotte, NC 28217

File Name : 15411707 - Brevard Rd -- Pole Creasman Rd
Site Code : 15411707
Start Date : 4/20/2021
Page No : 1

Groups Printed- Classes 4, 5, 6, 7

	Brevard Rd Southbound					Pole Creasman Rd Westbound					Brevard Rd Northbound					Pole Creasman Rd Eastbound					
Start Time	Left	Thru	Right	U-Turn	App. Total	Left	Thru	Right	U-Turn	App. Total	Left	Thru	Right	U-Turn	App. Total	Left	Thru	Right	U-Turn	App. Total	Int. Total
06:00 AM	0	3	0	0	3	0	0	0	0	0	0	3	0	0	3	0	0	0	0	0	6
06:15 AM	0	4	0	0	4	0	0	0	0	0	0	13	0	0	13	0	0	0	0	0	17
06:30 AM	0	3	0	0	3	0	0	0	0	0	0	6	0	0	6	0	0	1	0	1	10
06:45 AM	0	6	0	0	6	0	0	0	0	0	0	8	0	0	8	0	0	1	0	1	15
Total	0	16	0	0	16	0	0	0	0	0	0	30	0	0	30	0	0	2	0	2	48
07:00 AM	0	5	0	0	5	0	0	0	0	0	0	4	0	0	4	0	0	1	0	1	10
07:15 AM	0	4	2	0	6	0	0	0	0	0	0	6	0	0	6	1	0	0	0	1	13
07:30 AM	0	10	0	0	10	0	0	0	0	0	0	10	0	0	10	0	0	1	0	1	21
07:45 AM	0	7	0	0	7	0	0	0	0	0	0	7	0	0	7	0	0	0	0	0	14
Total	0	26	2	0	28	0	0	0	0	0	0	27	0	0	27	1	0	2	0	3	58
08:00 AM	0	10	1	0	11	0	0	0	0	0	0	7	0	0	7	0	0	0	0	0	18
08:15 AM	0	8	0	0	8	0	0	0	0	0	0	6	0	0	6	0	0	0	0	0	14
08:30 AM	0	7	1	0	8	0	0	0	0	0	0	8	0	0	8	1	0	0	0	1	17
08:45 AM	0	11	0	0	11	0	0	0	0	0	1	8	0	0	9	0	0	0	0	0	20
Total	0	36	2	0	38	0	0	0	0	0	1	29	0	0	30	1	0	0	0	1	69
09:00 AM	0	9	0	0	9	0	0	0	0	0	0	6	0	0	6	0	0	0	0	0	15
09:15 AM	0	9	0	0	9	0	0	0	0	0	0	5	0	0	5	0	0	0	0	0	14
09:30 AM	0	5	0	0	5	0	0	0	0	0	0	8	0	0	8	1	0	0	0	1	14
09:45 AM	0	6	1	0	7	0	0	0	0	0	0	7	0	0	7	1	0	0	0	1	15
Total	0	29	1	0	30	0	0	0	0	0	0	26	0	0	26	2	0	0	0	2	58
10:00 AM	0	4	1	0	5	0	0	0	0	0	0	13	0	0	13	1	0	0	0	1	19
10:15 AM	0	10	0	0	10	0	0	0	0	0	0	8	0	0	8	0	0	0	0	0	18
10:30 AM	0	7	0	0	7	0	0	0	0	0	0	7	0	0	7	0	0	0	0	0	14
10:45 AM	0	9	0	0	9	0	0	0	0	0	0	15	0	0	15	0	0	0	0	0	24
Total	0	30	1	0	31	0	0	0	0	0	0	43	0	0	43	1	0	0	0	1	75
11:00 AM	0	8	0	0	8	0	0	0	0	0	1	7	0	0	8	0	0	0	0	0	16
11:15 AM	0	11	0	0	11	0	0	0	0	0	0	9	0	0	9	1	0	0	0	1	21
11:30 AM	0	8	0	0	8	0	0	0	0	0	0	12	0	0	12	0	0	1	0	1	21
11:45 AM	0	6	0	0	6	0	0	0	0	0	0	5	0	0	5	0	0	0	0	0	11
Total	0	33	0	0	33	0	0	0	0	0	1	33	0	0	34	1	0	1	0	2	69
12:00 PM	0	5	0	0	5	0	0	0	0	0	0	4	0	0	4	0	0	0	0	0	9
12:15 PM	0	5	0	0	5	0	0	0	0	0	0	7	0	0	7	0	0	0	0	0	12
12:30 PM	0	4	0	0	4	0	0	0	0	0	0	9	0	0	9	0	0	1	0	1	14
12:45 PM	0	6	0	0	6	0	0	0	0	0	0	9	0	0	9	0	0	0	0	0	15
Total	0	20	0	0	20	0	0	0	0	0	0	29	0	0	29	0	0	1	0	1	50
01:00 PM	0	8	4	0	12	0	0	0	0	0	0	6	0	0	6	0	0	0	0	0	18
01:15 PM	0	7	0	0	7	0	0	0	0	0	1	8	0	0	9	2	0	0	0	2	18
01:30 PM	0	11	0	0	11	0	0	0	0	0	0	13	0	0	13	0	0	0	0	0	24
01:45 PM	0	9	1	0	10	0	0	0	0	0	0	7	0	0	7	0	0	0	0	0	17
Total	0	35	5	0	40	0	0	0	0	0	1	34	0	0	35	2	0	0	0	2	77
02:00 PM	0	9	0	0	9	0	0	0	0	0	0	7	0	0	7	1	0	0	0	1	17
02:15 PM	0	8	0	0	8	0	0	0	0	0	0	7	1	0	8	0	0	0	0	0	16
02:30 PM	0	8	0	0	8	0	0	0	0	0	0	12	0	0	12	0	0	0	0	0	20
02:45 PM	0	6	0	0	6	0	0	0	0	0	1	10	0	0	11	0	0	0	0	0	17
Total	0	31	0	0	31	0	0	0	0	0	1	36	1	0	38	1	0	0	0	1	70
03:00 PM	0	10	0	0	10	0	0	0	0	0	0	8	0	0	8	2	0	1	0	3	21
03:15 PM	0	14	0	0	14	0	0	0	0	0	0	15	0	0	15	0	0	0	0	0	29
03:30 PM	0	6	1	0	7	0	0	0	0	0	0	18	0	0	18	0	0	0	0	0	25

DocuSign Envelope ID: 5C03745C-4B01-4834-A65D-B77F558A4F46

Quality Counts

920 Blairhill Rd, Ste B-106
Charlotte, NC 28217

File Name : 15411707 - Brevard Rd -- Pole Creasman Rd
Site Code : 15411707
Start Date : 4/20/2021

Groups Printed- Classes 4, 5, 6, 7

	Brevard Rd Southbound					Pole Creasman Rd Westbound					Brevard Rd Northbound					Pole Creasman Rd Eastbound					
Start Time	Left	Thru	Right	U-Turn	App. Total	Left	Thru	Right	U-Turn	App. Total	Left	Thru	Right	U-Turn	App. Total	Left	Thru	Right	U-Turn	App. Total	Int. Total
03:45 PM	0	14	1	0	15	0	0	0	0	0	0	13	0	0	13	0	1	0	0	1	29
Total	0	44	2	0	46	0	0	0	0	0	0	54	0	0	54	2	1	1	0	4	104
04:00 PM	0	10	0	0	10	0	0	1	0	1	1	14	0	0	15	1	0	0	0	1	27
04:15 PM	0	10	0	0	10	0	0	0	0	0	0	8	0	0	8	0	0	0	0	0	18
04:30 PM	0	5	1	0	6	0	0	0	0	0	0	15	0	0	15	0	0	0	0	0	21
04:45 PM	0	3	0	0	3	0	0	0	0	0	0	11	0	0	11	0	0	0	0	0	14
Total	0	28	1	0	29	0	0	1	0	1	1	48	0	0	49	1	0	0	0	1	80
05:00 PM	0	5	0	0	5	0	0	0	0	0	1	14	0	0	15	0	0	0	0	0	20
05:15 PM	0	3	0	0	3	0	0	0	0	0	0	15	0	0	15	0	0	0	0	0	18
05:30 PM	0	3	0	0	3	0	0	0	0	0	0	3	0	0	3	0	0	0	0	0	6
05:45 PM	0	3	0	0	3	0	0	0	0	0	1	6	0	0	7	0	0	0	0	0	10
Total	0	14	0	0	14	0	0	0	0	0	2	38	0	0	40	0	0	0	0	0	54
06:00 PM	0	4	0	0	4	0	0	0	0	0	0	7	0	0	7	1	0	0	0	1	12
06:15 PM	0	5	0	0	5	0	0	0	0	0	0	2	0	0	2	0	0	0	0	0	7
06:30 PM	0	1	0	0	1	0	0	0	0	0	0	4	0	0	4	0	0	0	0	0	5
06:45 PM	0	0	0	0	0	0	0	0	0	0	0	5	0	0	5	0	0	0	0	0	5
Total	0	10	0	0	10	0	0	0	0	0	0	18	0	0	18	1	0	0	0	1	29
Grand Total	0	352	14	0	366	0	0	1	0	1	7	445	1	0	453	13	1	7	0	21	841
Apprch %	0	96.2	3.8	0		0	0	100	0		1.5	98.2	0.2	0		61.9	4.8	33.3	0		
Total %	0	41.9	1.7	0	43.5	0	0	0.1	0	0.1	0.8	52.9	0.1	0	53.9	1.5	0.1	0.8	0	2.5	

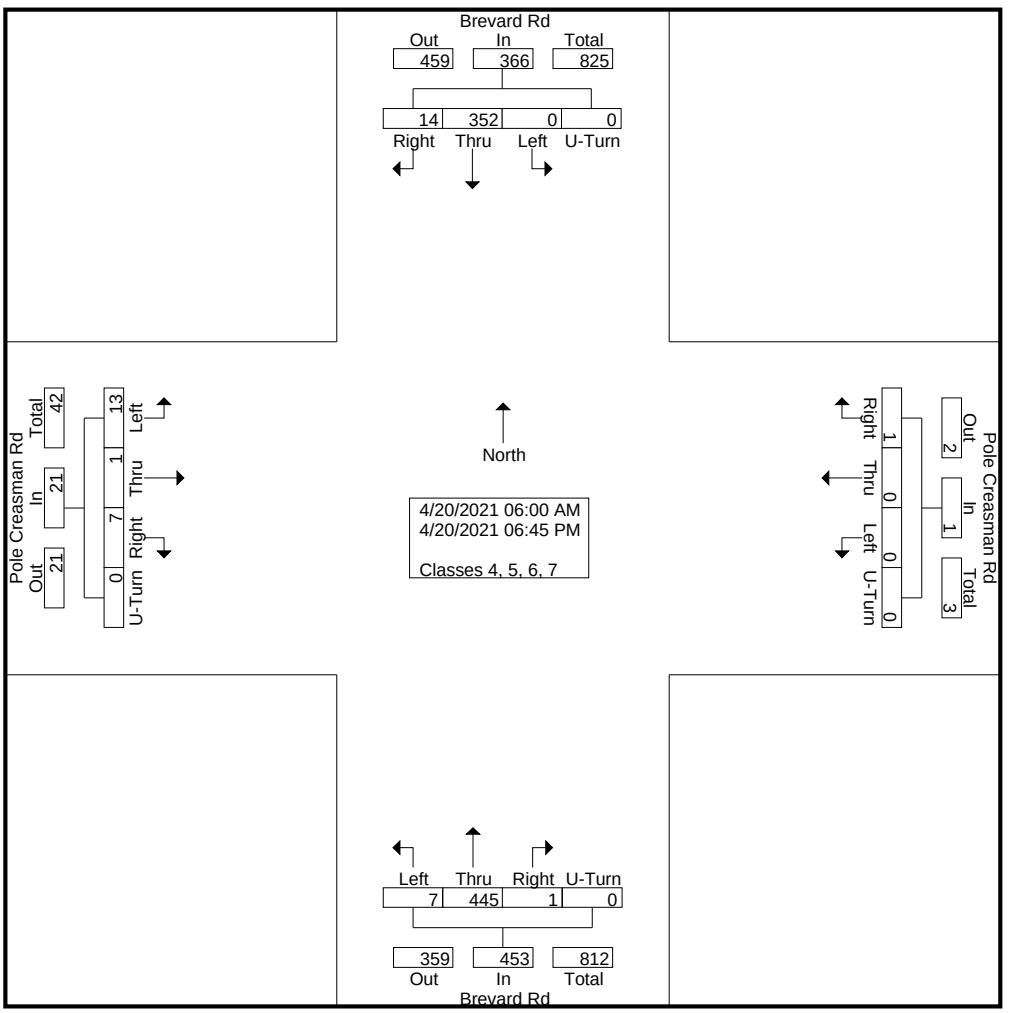

DocuSign Envelope ID: 5C03745C-4B01-4834-A65D-B77F558A4F46

Quality Counts

920 Blairhill Rd, Ste B-106
Charlotte, NC 28217

File Name : 15411707 - Brevard Rd -- Pole Creasman Rd
Site Code : 15411707
Start Date : 4/20/2021
Page No : 3

	Brevard Rd Southbound					Pole Creasman Rd Westbound					Brevard Rd Northbound					Pole Creasman Rd Eastbound					
Start Time	Left	Thru	Right	U-Turn	App. Total	Left	Thru	Right	U-Turn	App. Total	Left	Thru	Right	U-Turn	App. Total	Left	Thru	Right	U-Turn	App. Total	Int. Total
Peak Hour Analysis From 06:00 AM to 11:45 AM - Peak 1 of 1																					
Peak Hour for Entire Intersection Begins at 10:45 AM																					
10:45 AM	0	9	0	0	9	0	0	0	0	0	0	**15**	0	0	**15**	0	0	0	0	0	**24**
11:00 AM	0	8	0	0	8	0	0	0	0	0	**1**	7	0	0	8	0	0	0	0	0	16
11:15 AM	0	**11**	0	0	**11**	0	0	0	0	0	0	9	0	0	9	**1**	0	0	0	**1**	21
11:30 AM	0	8	0	0	8	0	0	0	0	0	0	12	0	0	12	0	0	**1**	0	1	21
Total Volume	0	36	0	0	36	0	0	0	0	0	1	43	0	0	44	1	0	1	0	2	82
% App. Total	0	100	0	0		0	0	0	0		2.3	97.7	0	0		50	0	50	0		
PHF	.000	.818	.000	.000	.818	.000	.000	.000	.000	.000	.250	.717	.000	.000	.733	.250	.000	.250	.000	.500	.854

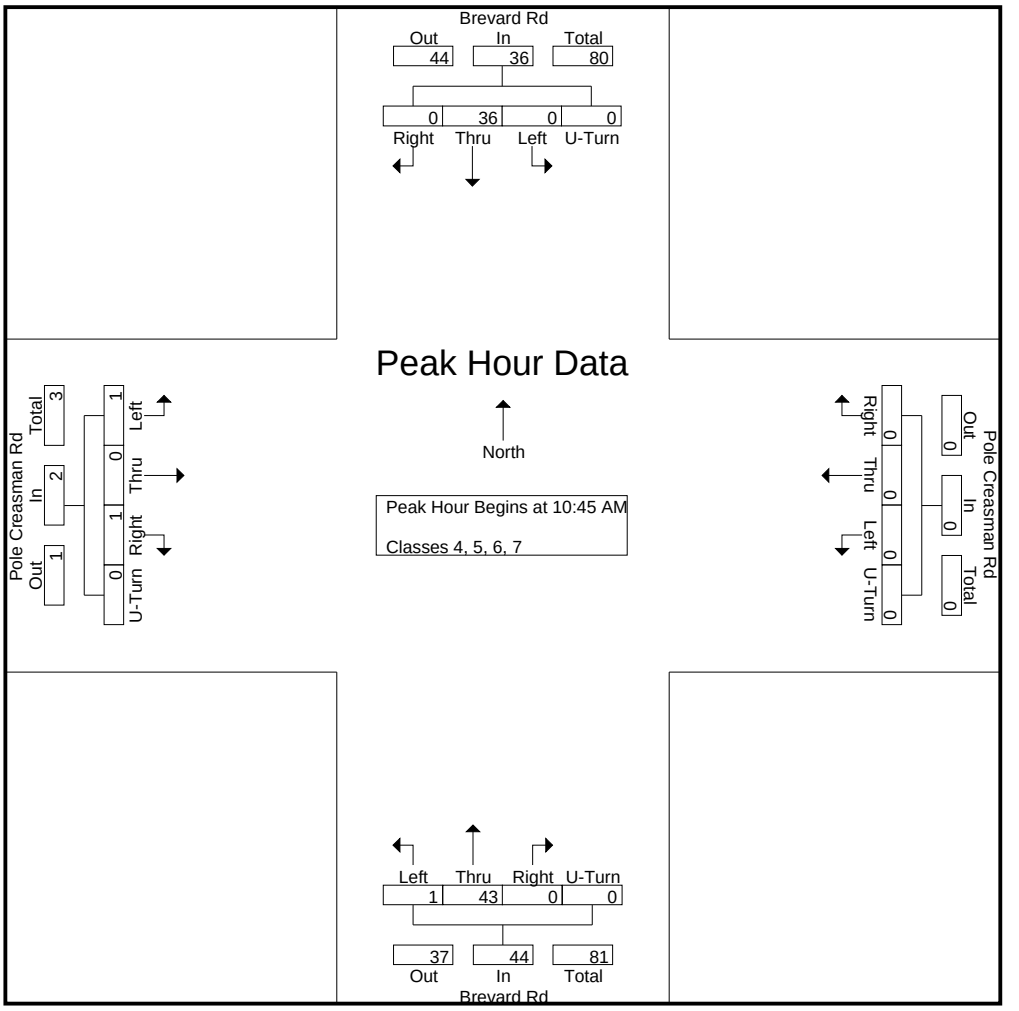

DocuSign Envelope ID: 5C03745C-4B01-4834-A65D-B77F558A4F46

Quality Counts

920 Blairhill Rd, Ste B-106
Charlotte, NC 28217

File Name : 15411707 - Brevard Rd -- Pole Creasman Rd
Site Code : 15411707
Start Date : 4/20/2021
Page No : 4

	Brevard Rd Southbound					Pole Creasman Rd Westbound					Brevard Rd Northbound					Pole Creasman Rd Eastbound					
Start Time	Left	Thru	Right	U-Turn	App. Total	Left	Thru	Right	U-Turn	App. Total	Left	Thru	Right	U-Turn	App. Total	Left	Thru	Right	U-Turn	App. Total	Int. Total
Peak Hour Analysis From 12:00 PM to 06:45 PM - Peak 1 of 1																					
Peak Hour for Entire Intersection Begins at 03:15 PM																					
03:15 PM	0	**14**	0	0	14	0	0	0	0	0	0	15	0	0	15	0	0	0	0	0	**29**
03:30 PM	0	6	**1**	0	7	0	0	0	0	0	0	**18**	0	0	**18**	0	0	0	0	0	25
03:45 PM	0	14	1	0	**15**	0	0	0	0	0	0	13	0	0	13	0	**1**	0	0	**1**	29
04:00 PM	0	10	0	0	10	0	0	**1**	0	**1**	**1**	14	0	0	15	**1**	0	0	0	1	27
Total Volume	0	44	2	0	46	0	0	1	0	1	1	60	0	0	61	1	1	0	0	2	110
% App. Total	0	95.7	4.3	0		0	0	100	0		1.6	98.4	0	0		50	50	0	0		
PHF	.000	.786	.500	.000	.767	.000	.000	.250	.000	.250	.250	.833	.000	.000	.847	.250	.250	.000	.000	.500	.948

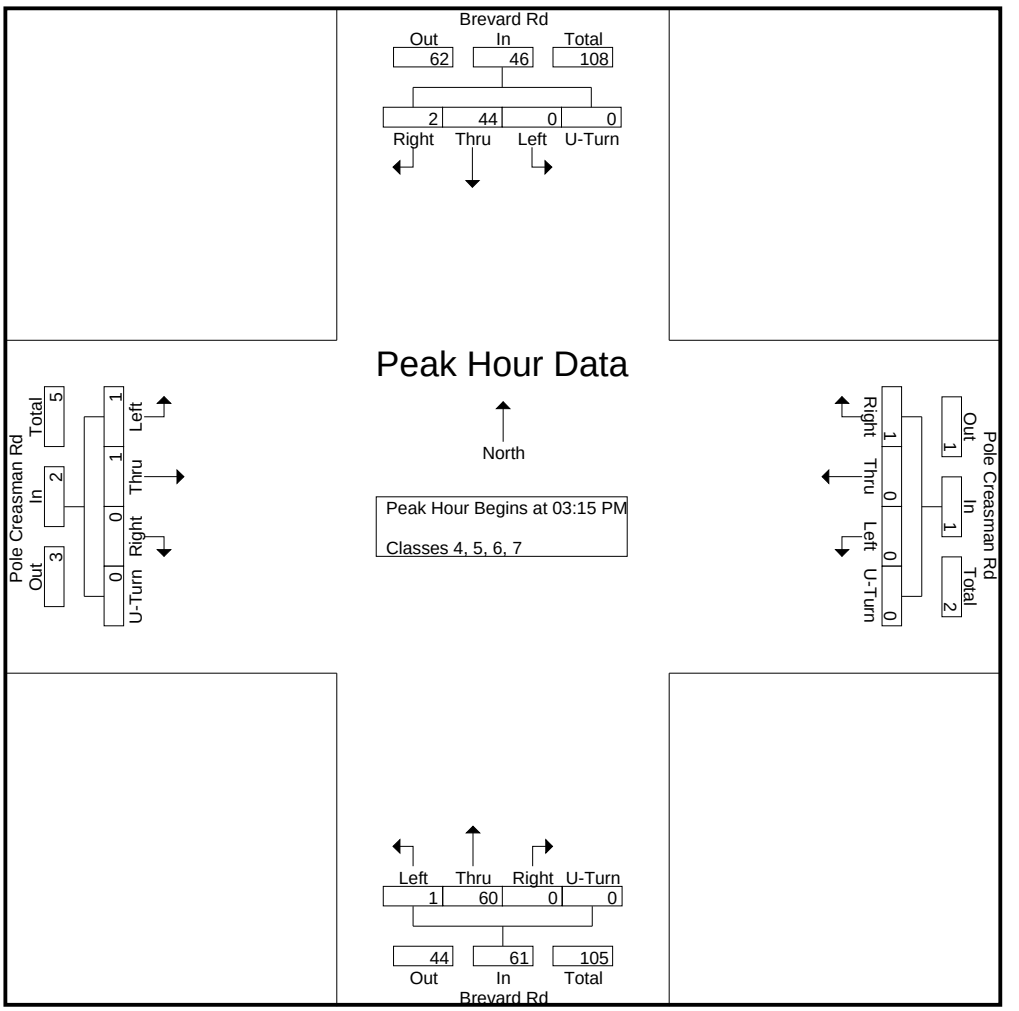

DocuSign Envelope ID: 5C03745C-4B01-4834-A65D-B77F558A4F46

Quality Counts

920 Blairhill Rd, Ste B-106
Charlotte, NC 28217

File Name : 15411707 - Brevard Rd -- Pole Creasman Rd
Site Code : 15411707
Start Date : 4/20/2021
Page No : 1

Groups Printed- Classes 8, 9, 10

	Brevard Rd Southbound					Pole Creasman Rd Westbound					Brevard Rd Northbound					Pole Creasman Rd Eastbound					
Start Time	Left	Thru	Right	U-Turn	App. Total	Left	Thru	Right	U-Turn	App. Total	Left	Thru	Right	U-Turn	App. Total	Left	Thru	Right	U-Turn	App. Total	Int. Total
06:00 AM	0	0	0	0	0	0	0	0	0	0	0	1	0	0	1	0	0	0	0	0	1
06:15 AM	0	0	0	0	0	0	0	0	0	0	0	1	0	0	1	0	0	0	0	0	1
06:30 AM	0	0	0	0	0	0	0	0	0	0	0	0	0	0	0	0	0	0	0	0	0
06:45 AM	0	0	0	0	0	0	0	0	0	0	0	1	0	0	1	0	0	0	0	0	1
Total	0	0	0	0	0	0	0	0	0	0	0	3	0	0	3	0	0	0	0	0	3
07:00 AM	0	2	0	0	2	0	0	0	0	0	0	1	0	0	1	0	0	0	0	0	3
07:15 AM	0	0	0	0	0	0	0	0	0	0	0	1	0	0	1	0	0	0	0	0	1
07:30 AM	0	2	0	0	2	0	0	0	0	0	0	0	0	0	0	0	0	0	0	0	2
07:45 AM	0	2	0	0	2	0	0	0	0	0	0	2	0	0	2	0	0	0	0	0	4
Total	0	6	0	0	6	0	0	0	0	0	0	4	0	0	4	0	0	0	0	0	10
08:00 AM	0	1	0	0	1	0	0	0	0	0	0	3	0	0	3	0	0	0	0	0	4
08:15 AM	0	0	0	0	0	0	0	0	0	0	0	3	0	0	3	0	0	0	0	0	3
08:30 AM	0	2	0	0	2	0	0	0	0	0	0	0	0	0	0	0	0	0	0	0	2
08:45 AM	0	1	0	0	1	0	0	0	0	0	0	2	0	0	2	0	0	0	0	0	3
Total	0	4	0	0	4	0	0	0	0	0	0	8	0	0	8	0	0	0	0	0	12
09:00 AM	0	2	0	0	2	0	0	0	0	0	0	5	0	0	5	0	0	0	0	0	7
09:15 AM	0	4	0	0	4	0	0	0	0	0	0	3	0	0	3	0	0	0	0	0	7
09:30 AM	0	1	0	0	1	0	0	0	0	0	0	3	0	0	3	0	0	0	0	0	4
09:45 AM	0	1	0	0	1	0	0	0	0	0	0	2	0	0	2	0	0	0	0	0	3
Total	0	8	0	0	8	0	0	0	0	0	0	13	0	0	13	0	0	0	0	0	21
10:00 AM	0	5	0	0	5	0	0	0	0	0	0	6	0	0	6	0	0	0	0	0	11
10:15 AM	0	2	0	0	2	0	0	0	0	0	0	1	0	0	1	0	0	0	0	0	3
10:30 AM	0	4	0	0	4	0	0	0	0	0	0	3	0	0	3	0	0	0	0	0	7
10:45 AM	0	2	0	0	2	0	0	0	0	0	0	1	0	0	1	0	0	0	0	0	3
Total	0	13	0	0	13	0	0	0	0	0	0	11	0	0	11	0	0	0	0	0	24
11:00 AM	0	1	0	0	1	0	0	0	0	0	0	4	0	0	4	0	0	0	0	0	5
11:15 AM	0	1	0	0	1	0	0	0	0	0	0	3	0	0	3	0	0	0	0	0	4
11:30 AM	0	0	0	0	0	0	0	0	0	0	0	4	0	0	4	0	0	0	0	0	4
11:45 AM	0	1	0	0	1	0	0	0	0	0	0	3	0	0	3	0	0	0	0	0	4
Total	0	3	0	0	3	0	0	0	0	0	0	14	0	0	14	0	0	0	0	0	17
12:00 PM	0	0	0	0	0	0	0	0	0	0	0	4	0	0	4	0	0	0	0	0	4
12:15 PM	0	2	0	0	2	0	0	0	0	0	0	2	0	0	2	0	0	0	0	0	4
12:30 PM	0	1	0	0	1	0	0	0	0	0	0	3	0	0	3	0	0	0	0	0	4
12:45 PM	0	4	0	0	4	0	0	0	0	0	0	3	0	0	3	0	0	0	0	0	7
Total	0	7	0	0	7	0	0	0	0	0	0	12	0	0	12	0	0	0	0	0	19
01:00 PM	0	0	0	0	0	0	0	0	0	0	0	2	0	0	2	0	0	0	0	0	2
01:15 PM	0	0	0	0	0	0	0	0	0	0	0	2	0	0	2	0	0	0	0	0	2
01:30 PM	0	2	0	0	2	0	0	0	0	0	0	2	0	0	2	0	0	0	0	0	4
01:45 PM	0	0	0	0	0	0	0	0	0	0	0	1	0	0	1	0	0	0	0	0	1
Total	0	2	0	0	2	0	0	0	0	0	0	7	0	0	7	0	0	0	0	0	9
02:00 PM	0	2	0	0	2	0	0	0	0	0	0	2	0	0	2	0	0	0	0	0	4
02:15 PM	0	1	0	0	1	0	0	0	0	0	0	0	0	0	0	0	0	0	0	0	1
02:30 PM	0	4	0	0	4	0	0	0	0	0	0	4	0	0	4	0	0	0	0	0	8
02:45 PM	0	1	0	0	1	0	0	0	0	0	0	3	0	0	3	0	0	0	0	0	4
Total	0	8	0	0	8	0	0	0	0	0	0	9	0	0	9	0	0	0	0	0	17
03:00 PM	0	1	0	0	1	0	0	0	0	0	0	1	0	0	1	0	0	0	0	0	2
03:15 PM	0	2	0	0	2	0	0	0	0	0	0	3	0	0	3	0	0	0	0	0	5
03:30 PM	0	2	0	0	2	0	0	0	0	0	0	4	0	0	4	0	0	0	0	0	6

DocuSign Envelope ID: 5C03745C-4B01-4834-A65D-B77F558A4F46

Quality Counts

920 Blairhill Rd, Ste B-106
Charlotte, NC 28217

File Name : 15411707 - Brevard Rd -- Pole Creasman Rd
Site Code : 15411707
Start Date : 4/20/2021
Page No : 2

Groups Printed- Classes 8, 9, 10

	Brevard Rd Southbound					Pole Creasman Rd Westbound					Brevard Rd Northbound					Pole Creasman Rd Eastbound					
Start Time	Left	Thru	Right	U-Turn	App. Total	Left	Thru	Right	U-Turn	App. Total	Left	Thru	Right	U-Turn	App. Total	Left	Thru	Right	U-Turn	App. Total	Int. Total
03:45 PM	0	0	0	0	0	0	0	0	0	0	0	1	0	0	1	0	0	0	0	0	1
Total	0	5	0	0	5	0	0	0	0	0	0	9	0	0	9	0	0	0	0	0	14
04:00 PM	0	2	0	0	2	0	0	0	0	0	0	1	0	0	1	0	0	0	0	0	3
04:15 PM	0	1	0	0	1	0	0	0	0	0	0	3	0	0	3	0	0	0	0	0	4
04:30 PM	0	1	0	0	1	0	0	0	0	0	0	0	0	0	0	0	0	0	0	0	1
04:45 PM	0	0	0	0	0	0	0	0	0	0	0	4	0	0	4	0	0	0	0	0	4
Total	0	4	0	0	4	0	0	0	0	0	0	8	0	0	8	0	0	0	0	0	12
05:00 PM	0	1	0	0	1	0	0	0	0	0	0	0	0	0	0	0	0	0	0	0	1
05:15 PM	0	3	0	0	3	0	0	0	0	0	0	1	0	0	1	0	0	0	0	0	4
05:30 PM	0	0	0	0	0	0	0	0	0	0	0	2	0	0	2	0	0	0	0	0	2
05:45 PM	0	2	0	0	2	0	0	0	0	0	0	0	0	0	0	0	0	0	0	0	2
Total	0	6	0	0	6	0	0	0	0	0	0	3	0	0	3	0	0	0	0	0	9
06:00 PM	0	0	0	0	0	0	0	0	0	0	0	1	0	0	1	0	0	0	0	0	1
06:15 PM	0	0	0	0	0	0	0	0	0	0	0	1	0	0	1	0	0	0	0	0	1
06:30 PM	0	0	0	0	0	0	0	0	0	0	0	0	0	0	0	0	0	0	0	0	0
06:45 PM	0	1	0	0	1	0	0	0	0	0	0	0	0	0	0	0	0	0	0	0	1
Total	0	1	0	0	1	0	0	0	0	0	0	2	0	0	2	0	0	0	0	0	3
Grand Total	0	67	0	0	67	0	0	0	0	0	0	103	0	0	103	0	0	0	0	0	170
Apprch %	0	100	0	0		0	0	0	0		0	100	0	0		0	0	0	0		
Total %	0	39.4	0	0	39.4	0	0	0	0	0	0	60.6	0	0	60.6	0	0	0	0	0	

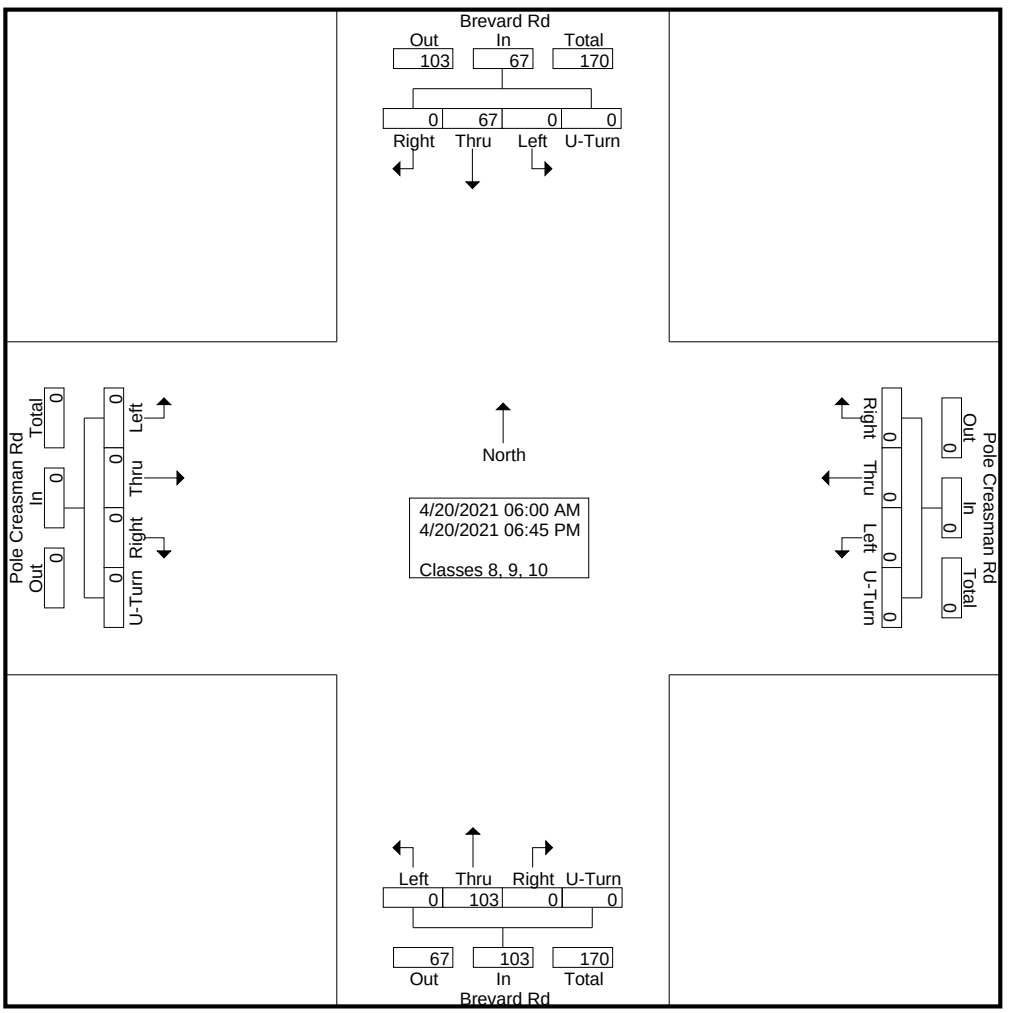

DocuSign Envelope ID: 5C03745C-4B01-4834-A65D-B77F558A4F46

Quality Counts

920 Blairhill Rd, Ste B-106
Charlotte, NC 28217

File Name : 15411707 - Brevard Rd -- Pole Creasman Rd
Site Code : 15411707
Start Date : 4/20/2021
Page No : 3

	Brevard Rd Southbound					Pole Creasman Rd Westbound					Brevard Rd Northbound					Pole Creasman Rd Eastbound					
Start Time	Left	Thru	Right	U-Turn	App. Total	Left	Thru	Right	U-Turn	App. Total	Left	Thru	Right	U-Turn	App. Total	Left	Thru	Right	U-Turn	App. Total	Int. Total
Peak Hour Analysis From 06:00 AM to 11:45 AM - Peak 1 of 1																					
Peak Hour for Entire Intersection Begins at 09:15 AM																					
09:15 AM	0	4	0	0	4	0	0	0	0	0	0	3	0	0	3	0	0	0	0	0	7
09:30 AM	0	1	0	0	1	0	0	0	0	0	0	3	0	0	3	0	0	0	0	0	4
09:45 AM	0	1	0	0	1	0	0	0	0	0	0	2	0	0	2	0	0	0	0	0	3
10:00 AM	0	**5**	0	0	**5**	0	0	0	0	0	0	**6**	0	0	**6**	0	0	0	0	0	**11**
Total Volume	0	11	0	0	11	0	0	0	0	0	0	14	0	0	14	0	0	0	0	0	25
% App. Total	0	100	0	0		0	0	0	0		0	100	0	0		0	0	0	0		
PHF	.000	.550	.000	.000	.550	.000	.000	.000	.000	.000	.000	.583	.000	.000	.583	.000	.000	.000	.000	.000	.568

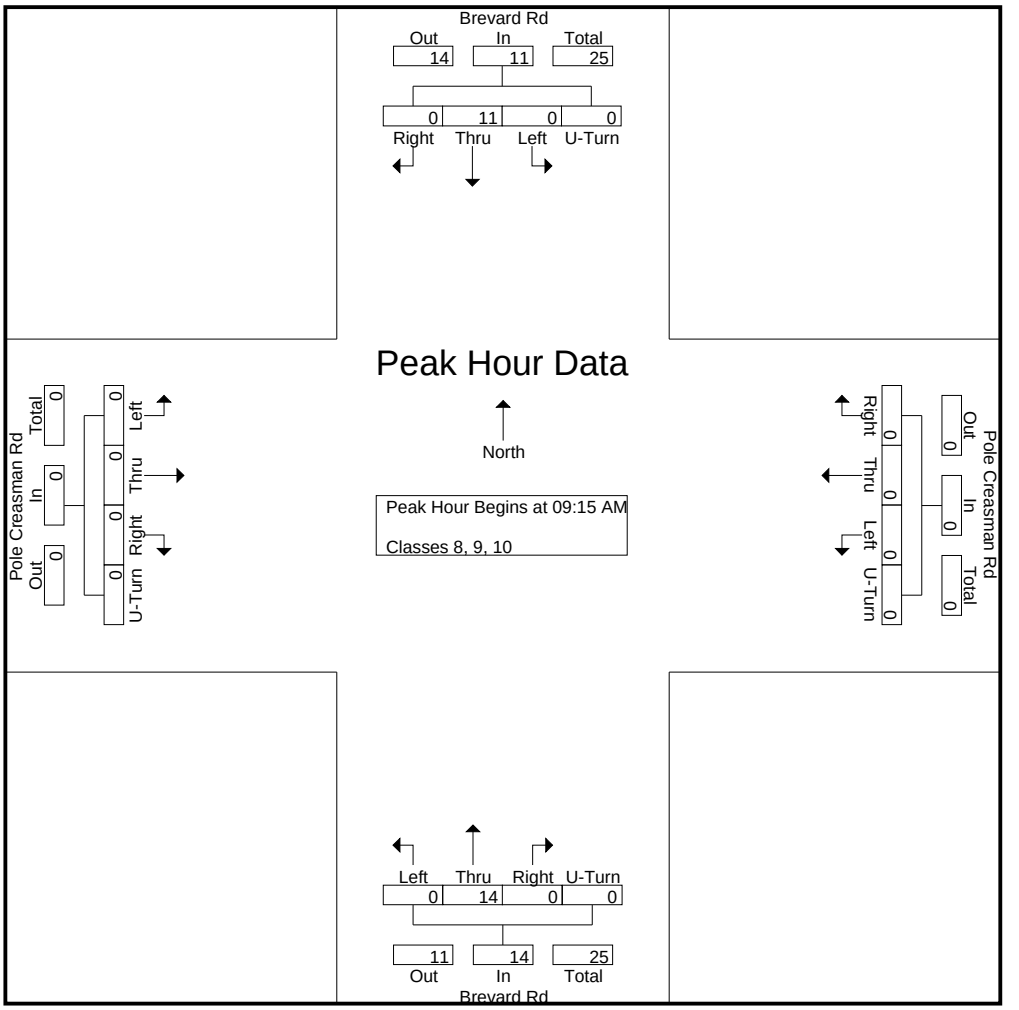

DocuSign Envelope ID: 5C03745C-4B01-4834-A65D-B77F558A4F46

Quality Counts

920 Blairhill Rd, Ste B-106
Charlotte, NC 28217

File Name : 15411707 - Brevard Rd -- Pole Creasman Rd
Site Code : 15411707
Start Date : 4/20/2021
Page No : 4

	Brevard Rd Southbound					Pole Creasman Rd Westbound					Brevard Rd Northbound					Pole Creasman Rd Eastbound					
Start Time	Left	Thru	Right	U-Turn	App. Total	Left	Thru	Right	U-Turn	App. Total	Left	Thru	Right	U-Turn	App. Total	Left	Thru	Right	U-Turn	App. Total	Int. Total
Peak Hour Analysis From 12:00 PM to 06:45 PM - Peak 1 of 1																					
Peak Hour for Entire Intersection Begins at 12:00 PM																					
12:00 PM	0	0	0	0	0	0	0	0	0	0	0	**4**	0	0	**4**	0	0	0	0	0	4
12:15 PM	0	2	0	0	2	0	0	0	0	0	0	2	0	0	2	0	0	0	0	0	4
12:30 PM	0	1	0	0	1	0	0	0	0	0	0	3	0	0	3	0	0	0	0	0	4
12:45 PM	0	**4**	0	0	**4**	0	0	0	0	0	0	3	0	0	3	0	0	0	0	0	**7**
Total Volume	0	7	0	0	7	0	0	0	0	0	0	12	0	0	12	0	0	0	0	0	19
% App. Total	0	100	0	0		0	0	0	0		0	100	0	0		0	0	0	0		
PHF	.000	.438	.000	.000	.438	.000	.000	.000	.000	.000	.000	.750	.000	.000	.750	.000	.000	.000	.000	.000	.679

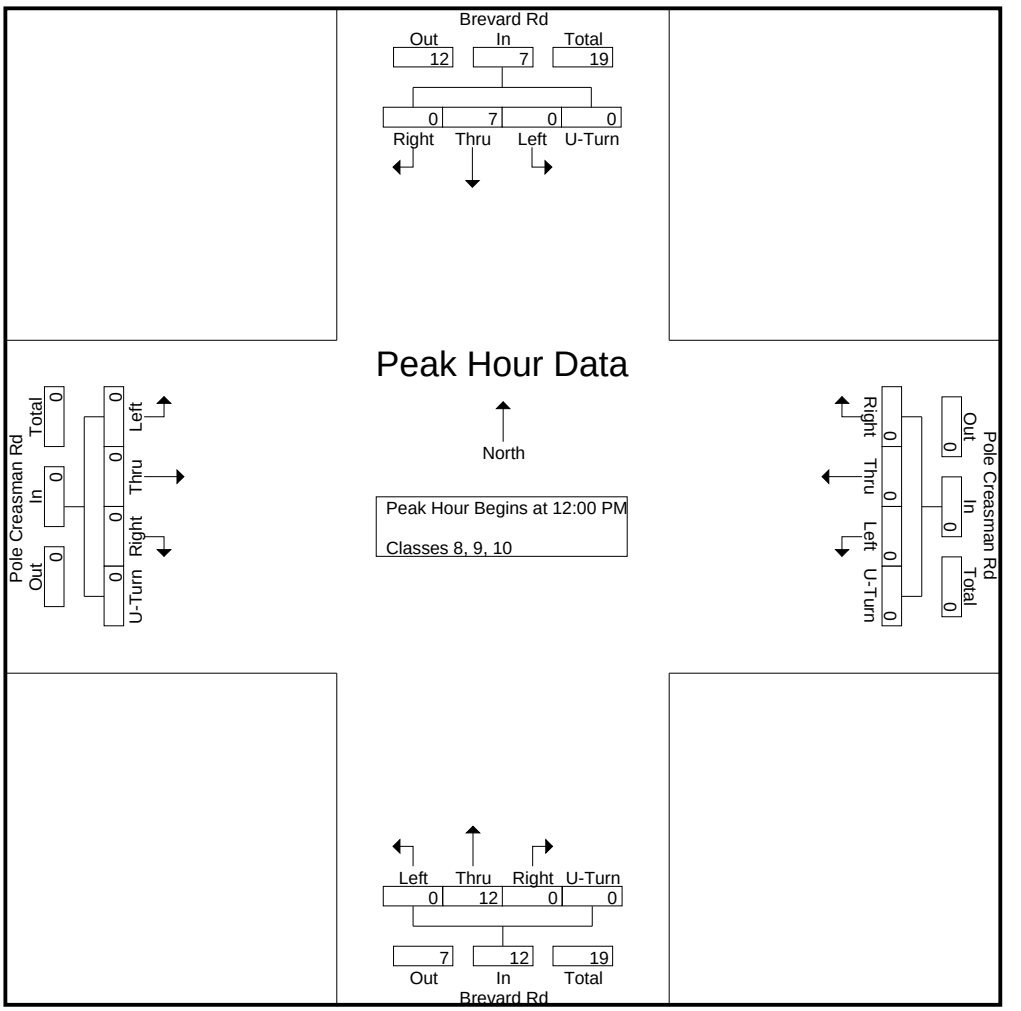

DocuSign Envelope ID: 5C03745C-4B01-4834-A65D-B77F558A4F46

Quality Counts

920 Blairhill Rd, Ste B-106
Charlotte, NC 28217

File Name : 15411707 - Brevard Rd -- Pole Creasman Rd
Site Code : 15411707
Start Date : 4/20/2021
Page No : 1

Groups Printed- Classes 11, 12, 13

	Brevard Rd Southbound					Pole Creasman Rd Westbound					Brevard Rd Northbound					Pole Creasman Rd Eastbound					
Start Time	Left	Thru	Right	U-Turn	App. Total	Left	Thru	Right	U-Turn	App. Total	Left	Thru	Right	U-Turn	App. Total	Left	Thru	Right	U-Turn	App. Total	Int. Total
06:00 AM	0	0	0	0	0	0	0	0	0	0	0	0	0	0	0	0	0	0	0	0	0
06:15 AM	0	0	0	0	0	0	0	0	0	0	0	0	0	0	0	0	0	0	0	0	0
06:30 AM	0	0	0	0	0	0	0	0	0	0	0	0	0	0	0	0	0	0	0	0	0
06:45 AM	0	0	0	0	0	0	0	0	0	0	0	0	0	0	0	0	0	0	0	0	0
Total	0	0	0	0	0	0	0	0	0	0	0	0	0	0	0	0	0	0	0	0	0
07:00 AM	0	0	0	0	0	0	0	0	0	0	0	0	0	0	0	0	0	0	0	0	0
07:15 AM	0	0	0	0	0	0	0	0	0	0	0	0	0	0	0	0	0	0	0	0	0
07:30 AM	0	0	0	0	0	0	0	0	0	0	0	0	0	0	0	0	0	0	0	0	0
07:45 AM	0	0	0	0	0	0	0	0	0	0	0	0	0	0	0	0	0	0	0	0	0
Total	0	0	0	0	0	0	0	0	0	0	0	0	0	0	0	0	0	0	0	0	0
08:00 AM	0	0	0	0	0	0	0	0	0	0	0	0	0	0	0	0	0	0	0	0	0
08:15 AM	0	0	0	0	0	0	0	0	0	0	0	0	0	0	0	0	0	0	0	0	0
08:30 AM	0	0	0	0	0	0	0	0	0	0	0	0	0	0	0	0	0	0	0	0	0
08:45 AM	0	0	0	0	0	0	0	0	0	0	0	0	0	0	0	0	0	0	0	0	0
Total	0	0	0	0	0	0	0	0	0	0	0	0	0	0	0	0	0	0	0	0	0
09:00 AM	0	0	0	0	0	0	0	0	0	0	0	0	0	0	0	0	0	0	0	0	0
09:15 AM	0	0	0	0	0	0	0	0	0	0	0	0	0	0	0	0	0	0	0	0	0
09:30 AM	0	0	0	0	0	0	0	0	0	0	0	0	0	0	0	0	0	0	0	0	0
09:45 AM	0	0	0	0	0	0	0	0	0	0	0	0	0	0	0	0	0	0	0	0	0
Total	0	0	0	0	0	0	0	0	0	0	0	0	0	0	0	0	0	0	0	0	0
10:00 AM	0	0	0	0	0	0	0	0	0	0	0	0	0	0	0	0	0	0	0	0	0
10:15 AM	0	0	0	0	0	0	0	0	0	0	0	0	0	0	0	0	0	0	0	0	0
10:30 AM	0	0	0	0	0	0	0	0	0	0	0	0	0	0	0	0	0	0	0	0	0
10:45 AM	0	0	0	0	0	0	0	0	0	0	0	0	0	0	0	0	0	0	0	0	0
Total	0	0	0	0	0	0	0	0	0	0	0	0	0	0	0	0	0	0	0	0	0
11:00 AM	0	0	0	0	0	0	0	0	0	0	0	0	0	0	0	0	0	0	0	0	0
11:15 AM	0	0	0	0	0	0	0	0	0	0	0	0	0	0	0	0	0	0	0	0	0
11:30 AM	0	0	0	0	0	0	0	0	0	0	0	0	0	0	0	0	0	0	0	0	0
11:45 AM	0	0	0	0	0	0	0	0	0	0	0	0	0	0	0	0	0	0	0	0	0
Total	0	0	0	0	0	0	0	0	0	0	0	0	0	0	0	0	0	0	0	0	0
12:00 PM	0	0	0	0	0	0	0	0	0	0	0	0	0	0	0	0	0	0	0	0	0
12:15 PM	0	0	0	0	0	0	0	0	0	0	0	0	0	0	0	0	0	0	0	0	0
12:30 PM	0	0	0	0	0	0	0	0	0	0	0	0	0	0	0	0	0	0	0	0	0
12:45 PM	0	0	0	0	0	0	0	0	0	0	0	0	0	0	0	0	0	0	0	0	0
Total	0	0	0	0	0	0	0	0	0	0	0	0	0	0	0	0	0	0	0	0	0
01:00 PM	0	0	0	0	0	0	0	0	0	0	0	0	0	0	0	0	0	0	0	0	0
01:15 PM	0	0	0	0	0	0	0	0	0	0	0	0	0	0	0	0	0	0	0	0	0
01:30 PM	0	0	0	0	0	0	0	0	0	0	0	0	0	0	0	0	0	0	0	0	0
01:45 PM	0	0	0	0	0	0	0	0	0	0	0	0	0	0	0	0	0	0	0	0	0
Total	0	0	0	0	0	0	0	0	0	0	0	0	0	0	0	0	0	0	0	0	0
02:00 PM	0	0	0	0	0	0	0	0	0	0	0	0	0	0	0	0	0	0	0	0	0
02:15 PM	0	0	0	0	0	0	0	0	0	0	0	0	0	0	0	0	0	0	0	0	0
02:30 PM	0	0	0	0	0	0	0	0	0	0	0	0	0	0	0	0	0	0	0	0	0
02:45 PM	0	0	0	0	0	0	0	0	0	0	0	0	0	0	0	0	0	0	0	0	0
Total	0	0	0	0	0	0	0	0	0	0	0	0	0	0	0	0	0	0	0	0	0
03:00 PM	0	0	0	0	0	0	0	0	0	0	0	0	0	0	0	0	0	0	0	0	0
03:15 PM	0	0	0	0	0	0	0	0	0	0	0	0	0	0	0	0	0	0	0	0	0
03:30 PM	0	0	0	0	0	0	0	0	0	0	0	0	0	0	0	0	0	0	0	0	0

DocuSign Envelope ID: 5C03745C-4B01-4834-A65D-B77F558A4F46

Quality Counts

920 Blairhill Rd, Ste B-106
Charlotte, NC 28217

File Name : 15411707 - Brevard Rd -- Pole Creasman Rd
Site Code : 15411707
Start Date : 4/20/2021
Page No : 2

Groups Printed- Classes 11, 12, 13

	Brevard Rd Southbound					Pole Creasman Rd Westbound					Brevard Rd Northbound					Pole Creasman Rd Eastbound					
Start Time	Left	Thru	Right	U-Turn	App. Total	Left	Thru	Right	U-Turn	App. Total	Left	Thru	Right	U-Turn	App. Total	Left	Thru	Right	U-Turn	App. Total	Int. Total
03:45 PM	0	0	0	0	0	0	0	0	0	0	0	0	0	0	0	0	0	0	0	0	0
Total	0	0	0	0	0	0	0	0	0	0	0	0	0	0	0	0	0	0	0	0	0
04:00 PM	0	0	0	0	0	0	0	0	0	0	0	0	0	0	0	0	0	0	0	0	0
04:15 PM	0	0	0	0	0	0	0	0	0	0	0	0	0	0	0	0	0	0	0	0	0
04:30 PM	0	0	0	0	0	0	0	0	0	0	0	0	0	0	0	0	0	0	0	0	0
04:45 PM	0	0	0	0	0	0	0	0	0	0	0	0	0	0	0	0	0	0	0	0	0
Total	0	0	0	0	0	0	0	0	0	0	0	0	0	0	0	0	0	0	0	0	0
05:00 PM	0	0	0	0	0	0	0	0	0	0	0	0	0	0	0	0	0	0	0	0	0
05:15 PM	0	0	0	0	0	0	0	0	0	0	0	0	0	0	0	0	0	0	0	0	0
05:30 PM	0	0	0	0	0	0	0	0	0	0	0	0	0	0	0	0	0	0	0	0	0
05:45 PM	0	0	0	0	0	0	0	0	0	0	0	0	0	0	0	0	0	0	0	0	0
Total	0	0	0	0	0	0	0	0	0	0	0	0	0	0	0	0	0	0	0	0	0
06:00 PM	0	0	0	0	0	0	0	0	0	0	0	0	0	0	0	0	0	0	0	0	0
06:15 PM	0	0	0	0	0	0	0	0	0	0	0	0	0	0	0	0	0	0	0	0	0
06:30 PM	0	0	0	0	0	0	0	0	0	0	0	0	0	0	0	0	0	0	0	0	0
06:45 PM	0	0	0	0	0	0	0	0	0	0	0	0	0	0	0	0	0	0	0	0	0
Total	0	0	0	0	0	0	0	0	0	0	0	0	0	0	0	0	0	0	0	0	0
Grand Total	0	0	0	0	0	0	0	0	0	0	0	0	0	0	0	0	0	0	0	0	0
Apprch %	0	0	0	0		0	0	0	0		0	0	0	0		0	0	0	0		
Total %																					

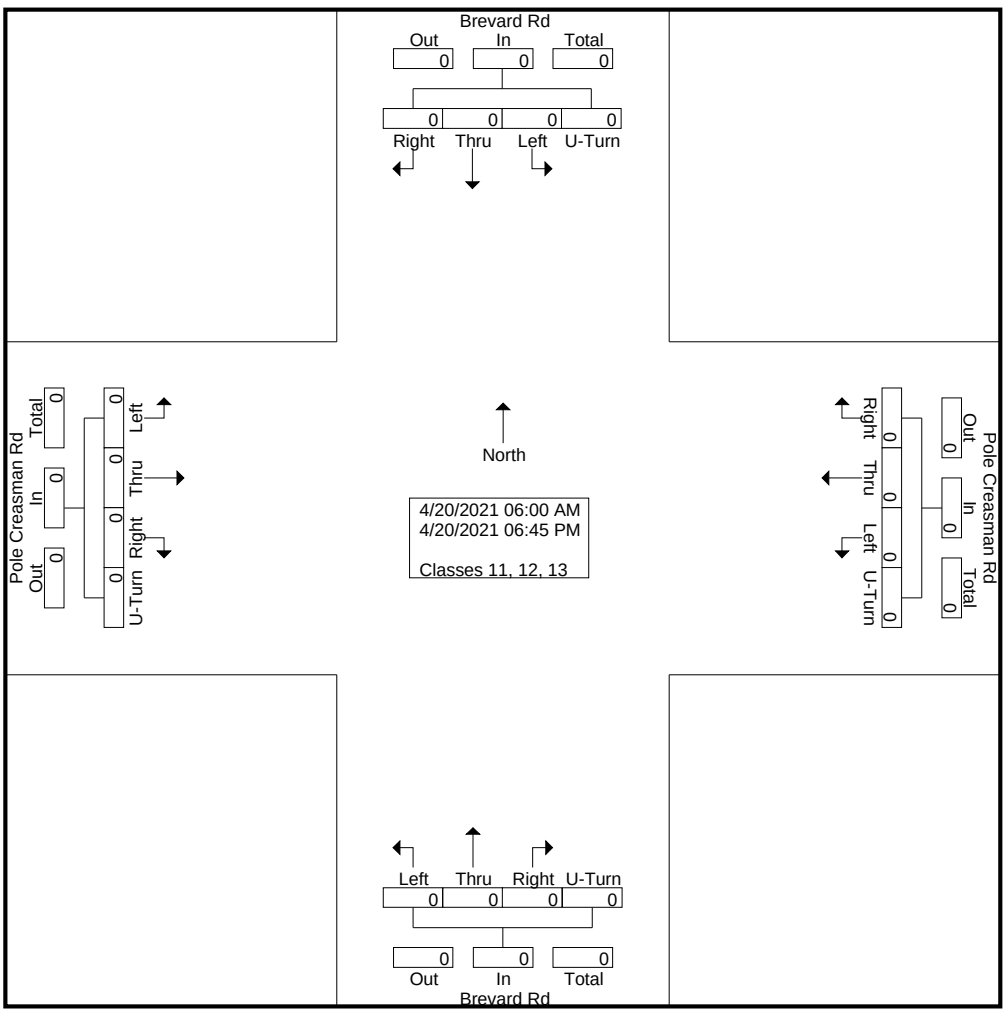

DocuSign Envelope ID: 5C03745C-4B01-4834-A65D-B77F558A4F46

Quality Counts

920 Blairhill Rd, Ste B-106
Charlotte, NC 28217

File Name : 15411707 - Brevard Rd -- Pole Creasman Rd
Site Code : 15411707
Start Date : 4/20/2021
Page No : 3

	Brevard Rd Southbound					Pole Creasman Rd Westbound					Brevard Rd Northbound					Pole Creasman Rd Eastbound					
Start Time	Left	Thru	Right	U-Turn	App. Total	Left	Thru	Right	U-Turn	App. Total	Left	Thru	Right	U-Turn	App. Total	Left	Thru	Right	U-Turn	App. Total	Int. Total
Peak Hour Analysis From 06:00 AM to 11:45 AM - Peak 1 of 1																					
Peak Hour for Entire Intersection Begins at 06:00 AM																					
06:00 AM	0	0	0	0	0	0	0	0	0	0	0	0	0	0	0	0	0	0	0	0	0
06:15 AM	0	0	0	0	0	0	0	0	0	0	0	0	0	0	0	0	0	0	0	0	0
06:30 AM	0	0	0	0	0	0	0	0	0	0	0	0	0	0	0	0	0	0	0	0	0
06:45 AM	0	0	0	0	0	0	0	0	0	0	0	0	0	0	0	0	0	0	0	0	0
Total Volume	0	0	0	0	0	0	0	0	0	0	0	0	0	0	0	0	0	0	0	0	0
% App. Total	0	0	0	0		0	0	0	0		0	0	0	0		0	0	0	0		
PHF	.000	.000	.000	.000	.000	.000	.000	.000	.000	.000	.000	.000	.000	.000	.000	.000	.000	.000	.000	.000	.000

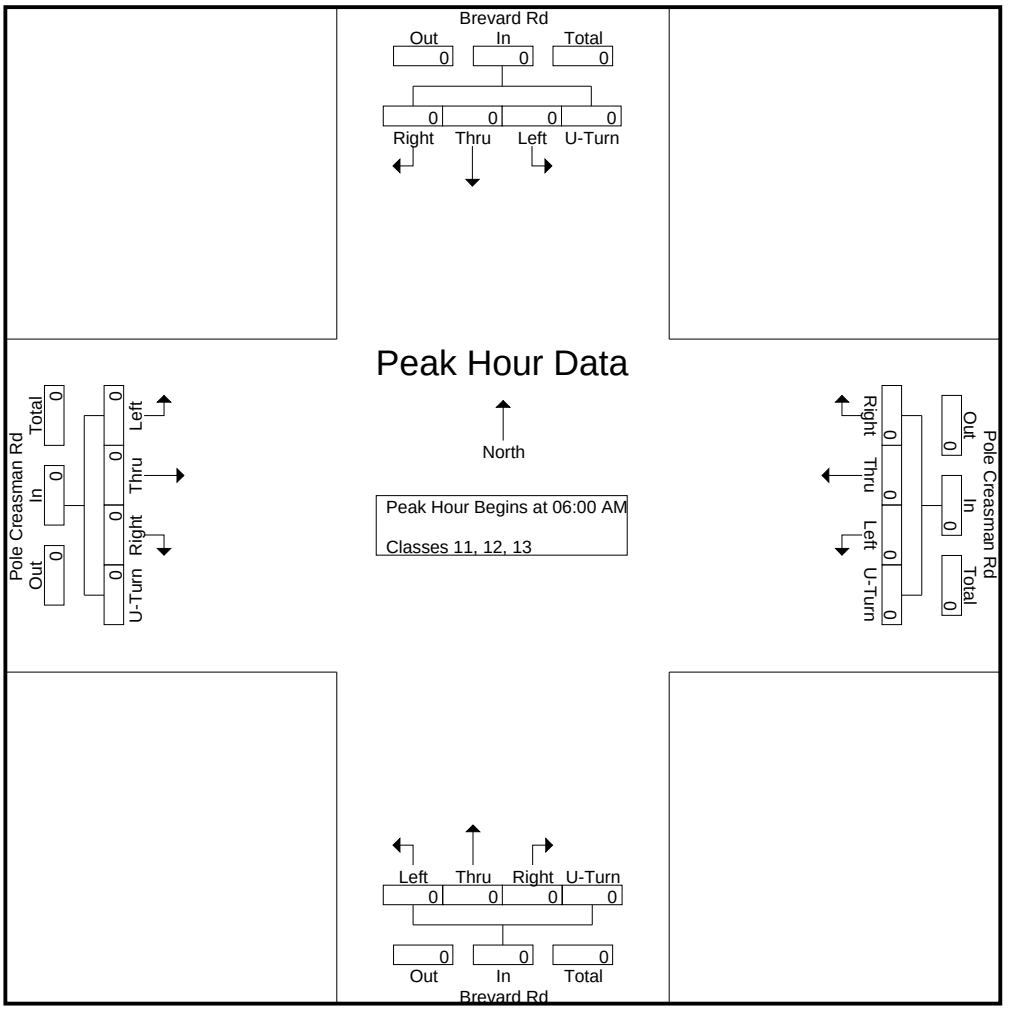

DocuSign Envelope ID: 5C03745C-4B01-4834-A65D-B77F558A4F46

Quality Counts

920 Blairhill Rd, Ste B-106
Charlotte, NC 28217

File Name : 15411707 - Brevard Rd -- Pole Creasman Rd
Site Code : 15411707
Start Date : 4/20/2021
Page No : 4

	Brevard Rd Southbound					Pole Creasman Rd Westbound					Brevard Rd Northbound					Pole Creasman Rd Eastbound					
Start Time	Left	Thru	Right	U-Turn	App. Total	Left	Thru	Right	U-Turn	App. Total	Left	Thru	Right	U-Turn	App. Total	Left	Thru	Right	U-Turn	App. Total	Int. Total
Peak Hour Analysis From 12:00 PM to 06:45 PM - Peak 1 of 1																					
Peak Hour for Entire Intersection Begins at 12:00 PM																					
12:00 PM	0	0	0	0	0	0	0	0	0	0	0	0	0	0	0	0	0	0	0	0	0
12:15 PM	0	0	0	0	0	0	0	0	0	0	0	0	0	0	0	0	0	0	0	0	0
12:30 PM	0	0	0	0	0	0	0	0	0	0	0	0	0	0	0	0	0	0	0	0	0
12:45 PM	0	0	0	0	0	0	0	0	0	0	0	0	0	0	0	0	0	0	0	0	0
Total Volume	0	0	0	0	0	0	0	0	0	0	0	0	0	0	0	0	0	0	0	0	0
% App. Total	0	0	0	0		0	0	0	0		0	0	0	0		0	0	0	0		
PHF	.000	.000	.000	.000	.000	.000	.000	.000	.000	.000	.000	.000	.000	.000	.000	.000	.000	.000	.000	.000	.000

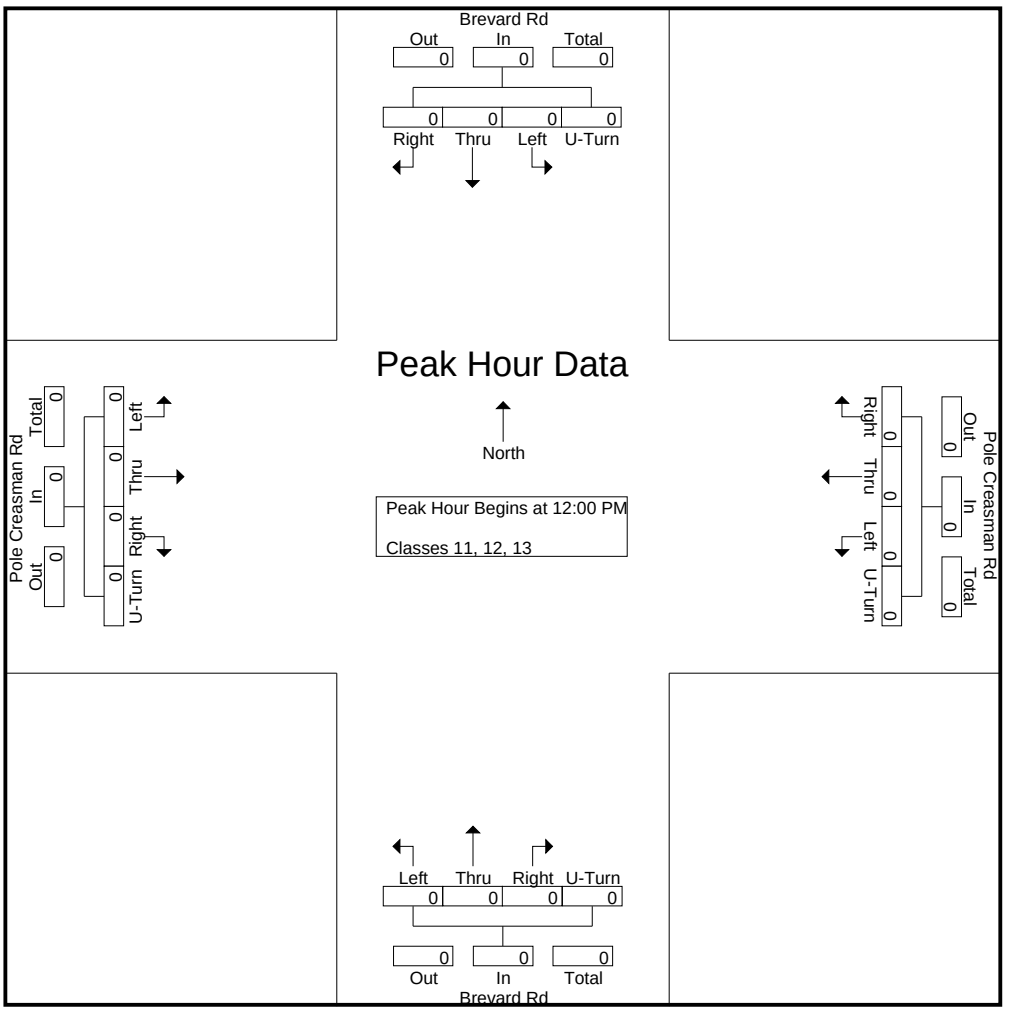

DocuSign Envelope ID: 5C03745C-4B01-4834-A65D-B77F558A4F46

Quality Counts

920 Blairhill Rd, Ste B-106
Charlotte, NC 28217

File Name : 15411707 - Brevard Rd -- Pole Creasman Rd
Site Code : 15411707
Start Date : 4/20/2021
Page No : 1

Groups Printed- Bikes, Peds

	Brevard Rd Southbound					Pole Creasman Rd Westbound					Brevard Rd Northbound					Pole Creasman Rd Eastbound					
Start Time	Left	Thru	Right	Peds	App. Total	Left	Thru	Right	Peds	App. Total	Left	Thru	Right	Peds	App. Total	Left	Thru	Right	Peds	App. Total	Int. Total
06:00 AM	0	0	0	0	0	0	0	0	0	0	0	0	0	0	0	0	0	0	0	0	0
06:15 AM	0	0	0	0	0	0	0	0	0	0	0	0	0	0	0	0	0	0	0	0	0
06:30 AM	0	0	0	0	0	0	0	0	0	0	0	0	0	0	0	0	0	0	0	0	0
06:45 AM	0	0	0	0	0	0	0	0	0	0	0	0	0	0	0	0	0	0	0	0	0
Total	0	0	0	0	0	0	0	0	0	0	0	0	0	0	0	0	0	0	0	0	0
07:00 AM	0	0	0	0	0	0	0	0	0	0	0	0	0	0	0	0	0	0	0	0	0
07:15 AM	0	0	0	0	0	0	0	0	0	0	0	0	0	0	0	0	0	0	0	0	0
07:30 AM	0	0	0	0	0	0	0	0	0	0	0	0	0	0	0	0	0	0	0	0	0
07:45 AM	0	0	0	0	0	0	0	0	0	0	0	0	0	0	0	0	0	0	0	0	0
Total	0	0	0	0	0	0	0	0	0	0	0	0	0	0	0	0	0	0	0	0	0
08:00 AM	0	0	0	0	0	0	0	0	0	0	0	0	0	0	0	0	0	0	0	0	0
08:15 AM	0	0	0	0	0	0	0	0	0	0	0	0	0	0	0	0	0	0	0	0	0
08:30 AM	0	0	0	0	0	0	0	0	0	0	0	0	0	0	0	0	0	0	0	0	0
08:45 AM	0	0	0	0	0	0	0	0	0	0	0	0	0	0	0	0	0	0	0	0	0
Total	0	0	0	0	0	0	0	0	0	0	0	0	0	0	0	0	0	0	0	0	0
09:00 AM	0	0	0	0	0	0	0	0	0	0	0	0	0	0	0	0	0	0	0	0	0
09:15 AM	0	0	0	0	0	0	0	0	0	0	0	0	0	0	0	0	0	0	0	0	0
09:30 AM	0	0	0	0	0	0	0	0	0	0	0	0	0	0	0	0	0	0	0	0	0
09:45 AM	0	0	0	0	0	0	0	0	0	0	0	0	0	0	0	0	0	0	0	0	0
Total	0	0	0	0	0	0	0	0	0	0	0	0	0	0	0	0	0	0	0	0	0
10:00 AM	0	0	0	0	0	0	0	0	0	0	0	0	0	0	0	0	0	0	0	0	0
10:15 AM	0	0	0	0	0	0	0	0	0	0	0	0	0	0	0	0	0	0	0	0	0
10:30 AM	0	0	0	0	0	0	0	0	0	0	0	0	0	0	0	0	0	0	0	0	0
10:45 AM	0	0	0	0	0	0	0	0	0	0	0	0	0	0	0	0	0	0	0	0	0
Total	0	0	0	0	0	0	0	0	0	0	0	0	0	0	0	0	0	0	0	0	0
11:00 AM	0	0	0	0	0	0	0	0	0	0	0	0	0	0	0	0	0	0	0	0	0
11:15 AM	0	0	0	0	0	0	0	0	0	0	0	0	0	0	0	0	0	0	0	0	0
11:30 AM	0	0	0	0	0	0	0	0	0	0	0	0	0	0	0	1	0	0	0	1	1
11:45 AM	0	0	0	0	0	0	0	0	0	0	0	0	0	0	0	0	0	0	0	0	0
Total	0	0	0	0	0	0	0	0	0	0	0	0	0	0	0	1	0	0	0	1	1
12:00 PM	0	0	0	0	0	0	0	0	0	0	0	0	0	0	0	0	0	0	0	0	0
12:15 PM	0	0	0	0	0	0	0	0	0	0	0	0	0	0	0	0	0	0	0	0	0
12:30 PM	0	0	0	0	0	0	0	0	0	0	0	1	0	0	1	0	0	0	0	0	1
12:45 PM	0	0	0	0	0	0	0	0	0	0	0	0	0	0	0	0	0	0	0	0	0
Total	0	0	0	0	0	0	0	0	0	0	0	1	0	0	1	0	0	0	0	0	1
01:00 PM	0	0	0	0	0	0	0	0	0	0	0	0	0	0	0	0	0	0	0	0	0
01:15 PM	0	0	0	0	0	0	0	0	0	0	0	0	0	0	0	0	0	0	0	0	0
01:30 PM	0	0	0	0	0	0	0	0	0	0	0	0	0	0	0	0	0	0	0	0	0
01:45 PM	0	0	0	0	0	0	0	0	0	0	0	1	0	0	1	0	0	0	0	0	1
Total	0	0	0	0	0	0	0	0	0	0	0	1	0	0	1	0	0	0	0	0	1
02:00 PM	0	0	0	0	0	0	0	0	0	0	0	0	0	0	0	0	0	0	0	0	0
02:15 PM	0	0	0	0	0	0	0	0	0	0	0	0	0	0	0	0	0	0	0	0	0
02:30 PM	0	0	2	0	2	0	0	0	0	0	0	0	0	0	0	0	0	0	0	0	2
02:45 PM	0	0	0	0	0	0	0	0	0	0	0	0	0	0	0	0	0	0	0	0	0
Total	0	0	2	0	2	0	0	0	0	0	0	0	0	0	0	0	0	0	0	0	2
03:00 PM	0	0	0	0	0	0	0	0	0	0	0	0	0	0	0	0	0	0	0	0	0
03:15 PM	0	0	0	0	0	0	0	0	0	0	0	0	0	0	0	0	0	0	0	0	0
03:30 PM	0	0	0	0	0	0	0	0	0	0	0	0	0	0	0	0	0	0	0	0	0

DocuSign Envelope ID: 5C03745C-4B01-4834-A65D-B77F558A4F46

Quality Counts

920 Blairhill Rd, Ste B-106
Charlotte, NC 28217

File Name : 15411707 - Brevard Rd -- Pole Creasman Rd
Site Code : 15411707
Start Date : 4/20/2021

Groups Printed- Bikes, Peds

	Brevard Rd Southbound					Pole Creasman Rd Westbound					Brevard Rd Northbound					Pole Creasman Rd Eastbound					
Start Time	Left	Thru	Right	Peds	App. Total	Left	Thru	Right	Peds	App. Total	Left	Thru	Right	Peds	App. Total	Left	Thru	Right	Peds	App. Total	Int. Total
03:45 PM	0	0	0	0	0	0	0	0	0	0	0	0	0	0	0	0	0	0	0	0	0
Total	0	0	0	0	0	0	0	0	0	0	0	0	0	0	0	0	0	0	0	0	0
04:00 PM	0	0	0	0	0	0	0	0	0	0	0	1	0	0	1	0	0	0	0	0	1
04:15 PM	0	0	0	0	0	0	0	0	0	0	0	0	0	0	0	0	0	0	0	0	0
04:30 PM	0	0	0	0	0	0	0	0	0	0	0	1	0	0	1	0	0	0	0	0	1
04:45 PM	0	0	1	0	1	0	0	0	0	0	0	0	0	0	0	0	0	0	0	0	1
Total	0	0	1	0	1	0	0	0	0	0	0	2	0	0	2	0	0	0	0	0	3
05:00 PM	0	0	0	0	0	0	0	0	0	0	0	0	0	0	0	0	0	0	0	0	0
05:15 PM	0	0	0	0	0	0	0	0	0	0	0	0	0	0	0	0	0	0	0	0	0
05:30 PM	0	0	0	0	0	0	0	0	0	0	0	0	0	0	0	0	0	0	0	0	0
05:45 PM	0	0	0	0	0	0	0	0	0	0	0	0	0	0	0	0	0	0	0	0	0
Total	0	0	0	0	0	0	0	0	0	0	0	0	0	0	0	0	0	0	0	0	0
06:00 PM	0	0	0	0	0	0	0	0	0	0	0	0	0	0	0	0	0	0	0	0	0
06:15 PM	0	1	0	0	1	0	0	0	0	0	0	0	0	0	0	0	0	0	0	0	1
06:30 PM	0	1	0	0	1	0	0	0	0	0	0	1	0	0	1	0	0	0	0	0	2
06:45 PM	0	0	0	0	0	0	0	0	0	0	0	1	0	0	1	0	0	0	0	0	1
Total	0	2	0	0	2	0	0	0	0	0	0	2	0	0	2	0	0	0	0	0	4
Grand Total	0	2	3	0	5	0	0	0	0	0	0	6	0	0	6	1	0	0	0	1	12
Apprch %	0	40	60	0		0	0	0	0		0	100	0	0		100	0	0	0		
Total %	0	16.7	25	0	41.7	0	0	0	0	0	0	50	0	0	50	8.3	0	0	0	8.3	

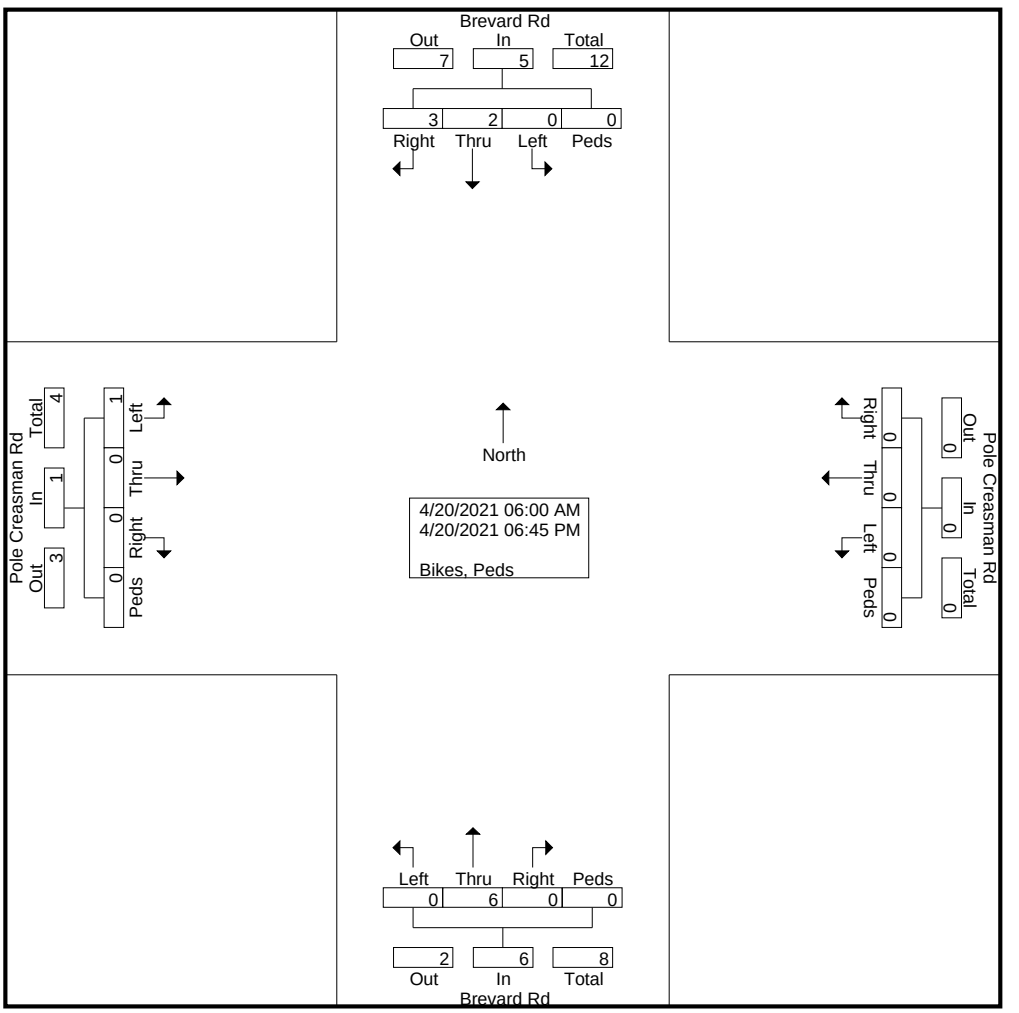

DocuSign Envelope ID: 5C03745C-4B01-4834-A65D-B77F558A4F46

Quality Counts

920 Blairhill Rd, Ste B-106
Charlotte, NC 28217

File Name : 15411707 - Brevard Rd -- Pole Creasman Rd
Site Code : 15411707
Start Date : 4/20/2021
Page No : 3

	Brevard Rd Southbound					Pole Creasman Rd Westbound					Brevard Rd Northbound					Pole Creasman Rd Eastbound					
Start Time	Left	Thru	Right	Peds	App. Total	Left	Thru	Right	Peds	App. Total	Left	Thru	Right	Peds	App. Total	Left	Thru	Right	Peds	App. Total	Int. Total
Peak Hour Analysis From 06:00 AM to 11:45 AM - Peak 1 of 1																					
Peak Hour for Entire Intersection Begins at 10:45 AM																					
10:45 AM	0	0	0	0	0	0	0	0	0	0	0	0	0	0	0	0	0	0	0	0	0
11:00 AM	0	0	0	0	0	0	0	0	0	0	0	0	0	0	0	0	0	0	0	0	0
11:15 AM	0	0	0	0	0	0	0	0	0	0	0	0	0	0	0	0	0	0	0	0	0
11:30 AM	0	0	0	0	0	0	0	0	0	0	0	0	0	0	0	**1**	0	0	0	**1**	**1**
Total Volume	0	0	0	0	0	0	0	0	0	0	0	0	0	0	0	1	0	0	0	1	1
% App. Total	0	0	0	0		0	0	0	0		0	0	0	0		100	0	0	0		
PHF	.000	.000	.000	.000	.000	.000	.000	.000	.000	.000	.000	.000	.000	.000	.000	.250	.000	.000	.000	.250	.250

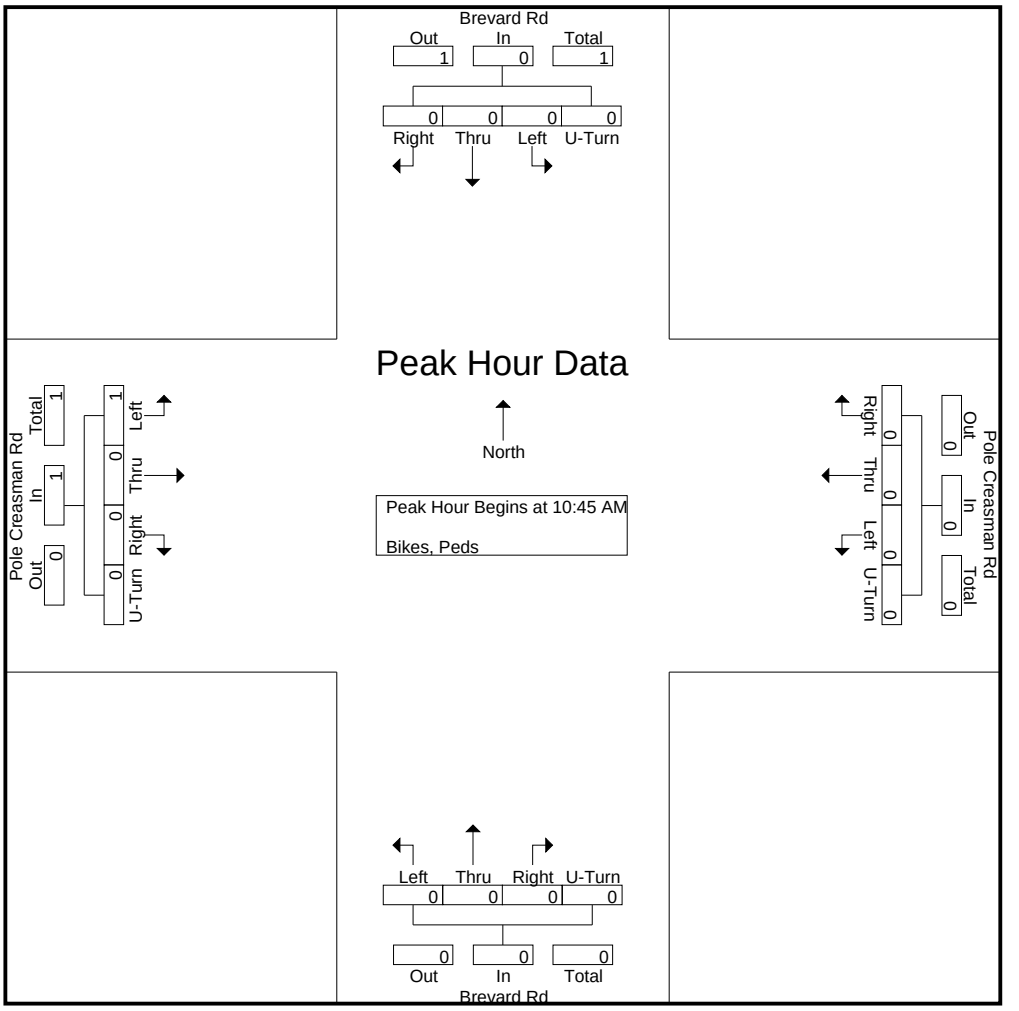

DocuSign Envelope ID: 5C03745C-4B01-4834-A65D-B77F558A4F46

Quality Counts

920 Blairhill Rd, Ste B-106
Charlotte, NC 28217

File Name : 15411707 - Brevard Rd -- Pole Creasman Rd
Site Code : 15411707
Start Date : 4/20/2021
Page No : 4

	Brevard Rd Southbound					Pole Creasman Rd Westbound					Brevard Rd Northbound					Pole Creasman Rd Eastbound					
Start Time	Left	Thru	Right	Peds	App. Total	Left	Thru	Right	Peds	App. Total	Left	Thru	Right	Peds	App. Total	Left	Thru	Right	Peds	App. Total	Int. Total
Peak Hour Analysis From 12:00 PM to 06:45 PM - Peak 1 of 1																					
Peak Hour for Entire Intersection Begins at 06:00 PM																					
06:00 PM	0	0	0	0	0	0	0	0	0	0	0	0	0	0	0	0	0	0	0	0	0
06:15 PM	0	**1**	0	0	**1**	0	0	0	0	0	0	0	0	0	0	0	0	0	0	0	1
06:30 PM	0	1	0	0	1	0	0	0	0	0	0	**1**	0	0	**1**	0	0	0	0	0	**2**
06:45 PM	0	0	0	0	0	0	0	0	0	0	0	1	0	0	1	0	0	0	0	0	1
Total Volume	0	2	0	0	2	0	0	0	0	0	0	2	0	0	2	0	0	0	0	0	4
% App. Total	0	100	0	0		0	0	0	0		0	100	0	0		0	0	0	0		
PHF	.000	.500	.000	.000	.500	.000	.000	.000	.000	.000	.000	.500	.000	.000	.500	.000	.000	.000	.000	.000	.500

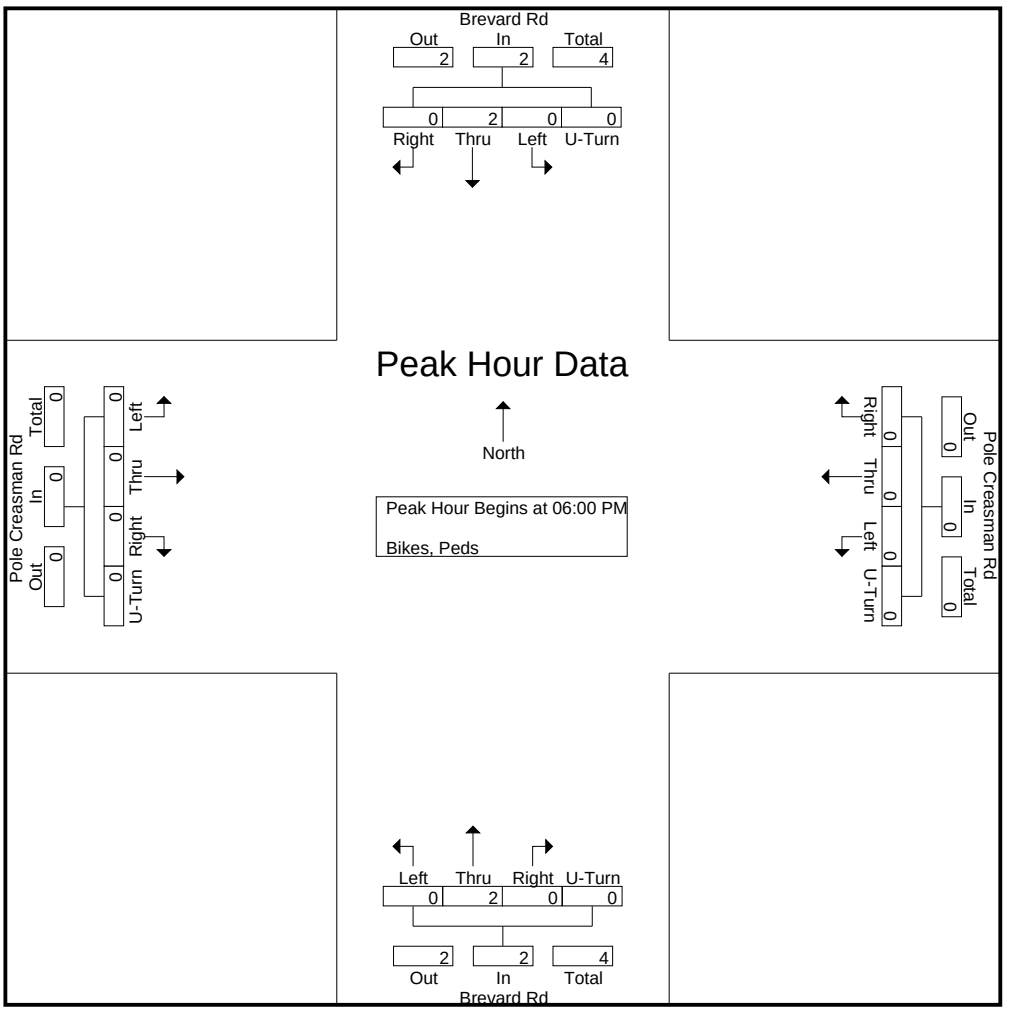

DocuSign Envelope ID: 5C03745C-4B01-4834-A65D-B77F558A4F46

QUALITY COUNTS LLC
920 Blairhill Rd, Suite 106, Charlotte, NC 28217
704.215.4616

Count Number: 15411708
County: Buncombe
City: Asheville
Division: 13

Location: Brevard Rd & Bent Creek Ranch Rd
General Location Type: Intersection
Count Type: Turning Movement (Classification)
Count Start Date: 4/20/2021
Time: 6:00 AM – 7:00 PM
Volume: 18,489

Maximum Temperature: 69° F
Minimum Temperature: 40° F
Precipitation: 0.00 in
Snowfall: 0.0 in
Average Sky Cover: 0.2
Weather Conditions: Clear

1. **School in Session:** Yes
2. **Pedestrians Counted**: Yes
3. **Disabled Pedestrians Present**: No
   Description and Approaches Used: N/A
4. **Counted By**: Nicole McCreary
5. **Data Processor**: Jon B
6. **Signal Inventory**: N/A
7. **Data Collection Method**: Video/Count Board
8. **Equipment Operating Properly**: Yes
9. **Area Lighting Present**: Yes
10. **Nearest Roadway Stop Sign < 300 ft:** No
    If yes, list approaches: N/A
11. **Nearest Traffic Signal < 300 ft:** No
    If yes, list approaches: N/A
12. **At-Grade Railroad Crossing Present (<200 ft):** No
    If yes, list approaches & distance: N/A
13. **Other:**

↑ North

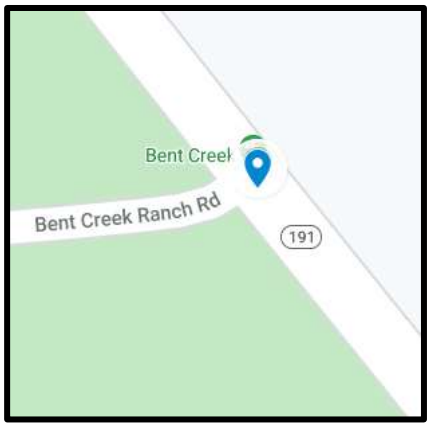

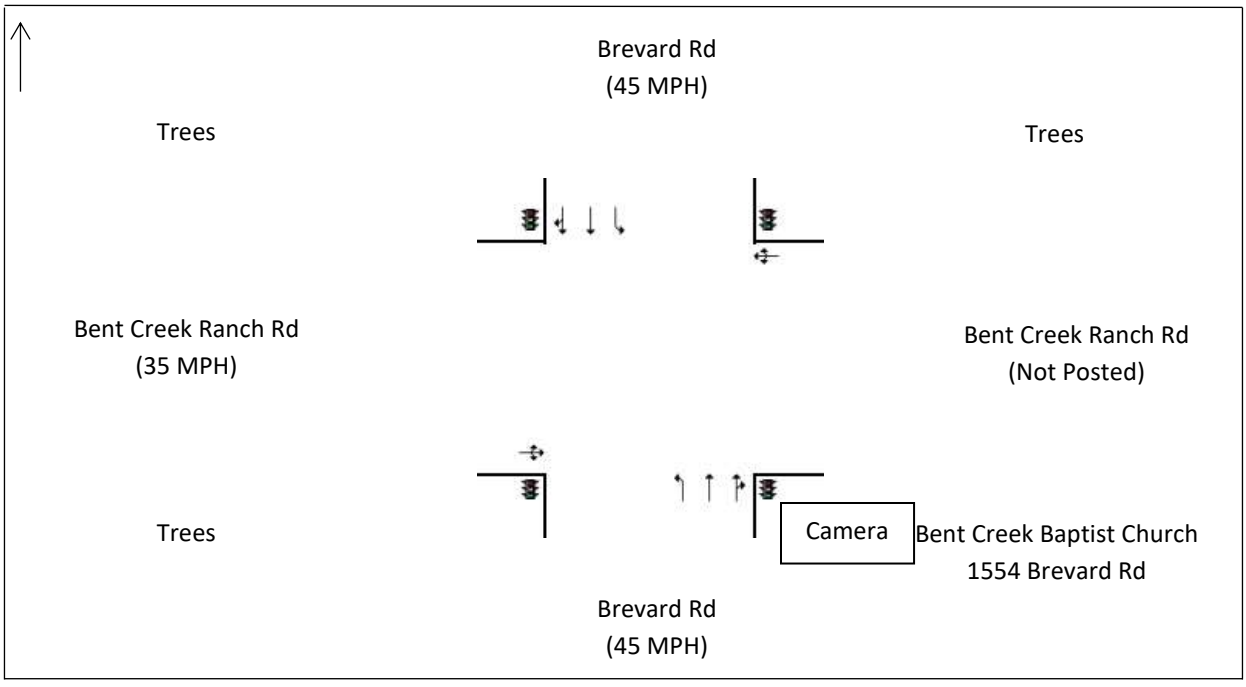

DocuSign Envelope ID: 5C03745C-4B01-4834-A65D-B77F558A4F46

Quality Counts

920 Blairhill Rd, Ste B-106
Charlotte, NC 28217

File Name : 15411708 - Brevard Rd -- Bent Creek Ranch Rd
Site Code : 15411708
Start Date : 4/20/2021
Page No : 1

Groups Printed- Classes 1, 2, 3 - Classes 4, 5, 6, 7 - Classes 8, 9, 10 - Classes 11, 12, 13

	Brevard Rd Southbound					Bent Creek Ranch Rd Westbound					Brevard Rd Northbound					Bent Creek Ranch Rd Eastbound					
Start Time	Left	Thru	Right	U-Turn	App. Total	Left	Thru	Right	U-Turn	App. Total	Left	Thru	Right	U-Turn	App. Total	Left	Thru	Right	U-Turn	App. Total	Int. Total
06:00 AM	0	60	3	0	63	0	0	0	0	0	0	28	0	0	28	4	0	8	0	12	103
06:15 AM	0	70	3	0	73	0	0	0	0	0	1	51	0	0	52	3	0	1	0	4	129
06:30 AM	0	142	4	0	146	0	0	1	0	1	0	77	0	0	77	2	0	2	0	4	228
06:45 AM	0	150	1	0	151	0	0	0	0	0	0	81	0	0	81	7	1	6	0	14	246
Total	0	422	11	0	433	0	0	1	0	1	1	237	0	0	238	16	1	17	0	34	706
07:00 AM	0	130	8	0	138	0	0	0	0	0	1	107	0	0	108	13	0	11	0	24	270
07:15 AM	0	132	4	0	136	0	0	0	0	0	2	137	0	0	139	9	0	11	0	20	295
07:30 AM	0	178	6	0	184	0	0	1	0	1	5	139	0	0	144	19	0	13	0	32	361
07:45 AM	0	158	9	0	167	0	0	0	0	0	7	186	0	0	193	11	1	13	0	25	385
Total	0	598	27	0	625	0	0	1	0	1	15	569	0	0	584	52	1	48	0	101	1311
08:00 AM	1	141	11	0	153	0	0	0	0	0	9	188	0	0	197	8	0	15	0	23	373
08:15 AM	3	164	15	1	183	0	0	0	0	0	9	147	0	0	156	6	0	16	0	22	361
08:30 AM	5	144	9	0	158	0	1	5	0	6	7	145	0	0	152	4	1	14	0	19	335
08:45 AM	3	152	17	0	172	1	1	4	0	6	11	128	0	0	139	9	2	9	0	20	337
Total	12	601	52	1	666	1	2	9	0	12	36	608	0	0	644	27	3	54	0	84	1406
09:00 AM	1	114	15	0	130	0	0	3	0	3	15	98	0	0	113	5	0	8	0	13	259
09:15 AM	1	111	13	0	125	1	1	0	0	2	13	93	1	0	107	7	0	13	0	20	254
09:30 AM	0	116	15	0	131	0	0	0	0	0	8	120	0	0	128	14	0	13	0	27	286
09:45 AM	0	108	13	0	121	0	0	0	0	0	4	109	0	1	114	10	0	7	0	17	252
Total	2	449	56	0	507	1	1	3	0	5	40	420	1	1	462	36	0	41	0	77	1051
10:00 AM	0	103	14	0	117	0	0	1	0	1	12	116	0	0	128	11	0	12	0	23	269
10:15 AM	0	105	8	0	113	0	0	1	0	1	6	105	0	0	111	8	0	13	0	21	246
10:30 AM	0	133	13	0	146	1	0	0	0	1	11	108	0	0	119	14	0	13	0	27	293
10:45 AM	0	128	10	0	138	0	1	0	0	1	4	125	0	0	129	18	0	19	0	37	305
Total	0	469	45	0	514	1	1	2	0	4	33	454	0	0	487	51	0	57	0	108	1113
11:00 AM	0	130	18	0	148	0	0	0	0	0	13	128	0	0	141	13	0	12	0	25	314
11:15 AM	0	128	11	0	139	0	0	0	0	0	13	135	0	0	148	15	1	21	0	37	324
11:30 AM	2	104	10	0	116	0	0	0	0	0	11	139	0	0	150	12	0	10	0	22	288
11:45 AM	6	145	20	1	172	0	0	1	0	1	10	144	0	0	154	12	0	7	0	19	346
Total	8	507	59	1	575	0	0	1	0	1	47	546	0	0	593	52	1	50	0	103	1272
12:00 PM	5	140	14	0	159	1	2	13	0	16	13	115	0	0	128	19	1	13	0	33	336
12:15 PM	0	144	11	0	155	0	0	2	0	2	9	136	0	0	145	16	0	14	0	30	332
12:30 PM	0	176	14	0	190	1	0	0	0	1	15	178	0	0	193	16	0	10	0	26	410
12:45 PM	0	147	11	0	158	0	0	1	0	1	7	160	0	0	167	23	0	16	0	39	365
Total	5	607	50	0	662	2	2	16	0	20	44	589	0	0	633	74	1	53	0	128	1443
01:00 PM	1	127	11	0	139	0	0	4	0	4	9	155	2	0	166	21	0	14	0	35	344
01:15 PM	0	137	23	0	160	1	0	3	0	4	5	157	0	0	162	11	0	13	0	24	350
01:30 PM	0	147	20	0	167	0	0	0	0	0	17	160	0	0	177	10	0	11	0	21	365
01:45 PM	1	169	10	0	180	0	0	2	0	2	11	152	0	0	163	10	0	9	0	19	364
Total	2	580	64	0	646	1	0	9	0	10	42	624	2	0	668	52	0	47	0	99	1423
02:00 PM	0	172	16	0	188	0	0	1	0	1	15	159	0	0	174	16	1	12	0	29	392
02:15 PM	2	175	27	0	204	0	0	3	0	3	6	179	0	0	185	12	2	11	0	25	417
02:30 PM	0	188	16	0	204	0	0	0	0	0	10	197	0	0	207	19	0	10	0	29	440
02:45 PM	0	171	20	0	191	1	1	1	0	3	12	215	1	0	228	21	1	17	0	39	461
Total	2	706	79	0	787	1	1	5	0	7	43	750	1	0	794	68	4	50	0	122	1710
03:00 PM	0	145	16	0	161	0	0	1	0	1	17	234	0	0	251	11	0	7	0	18	431
03:15 PM	0	182	27	0	209	0	0	0	0	0	22	262	0	0	284	11	0	9	0	20	513
03:30 PM	0	157	15	0	172	0	0	1	0	1	8	220	0	0	228	10	1	8	0	19	420

DocuSign Envelope ID: 5C03745C-4B01-4834-A65D-B77F558A4F46

Quality Counts

920 Blairhill Rd, Ste B-106
Charlotte, NC 28217

File Name : 15411708 - Brevard Rd -- Bent Creek Ranch Rd
Site Code : 15411708
Start Date : 4/20/2021

Groups Printed- Classes 1, 2, 3 - Classes 4, 5, 6, 7 - Classes 8, 9, 10 - Classes 11, 12, 13

	Brevard Rd Southbound					Bent Creek Ranch Rd Westbound					Brevard Rd Northbound					Bent Creek Ranch Rd Eastbound					
Start Time	Left	Thru	Right	U-Turn	App. Total	Left	Thru	Right	U-Turn	App. Total	Left	Thru	Right	U-Turn	App. Total	Left	Thru	Right	U-Turn	App. Total	Int. Total
03:45 PM	1	161	24	0	186	1	1	0	0	2	16	227	2	0	245	19	0	10	0	29	462
Total	1	645	82	0	728	1	1	2	0	4	63	943	2	0	1008	51	1	34	0	86	1826
04:00 PM	0	207	32	0	239	0	0	1	0	1	15	233	0	0	248	22	0	10	0	32	520
04:15 PM	0	176	37	0	213	0	0	0	0	0	21	234	0	0	255	14	0	6	0	20	488
04:30 PM	0	203	26	0	229	0	0	0	0	0	28	230	1	0	259	21	0	18	0	39	527
04:45 PM	0	146	22	0	168	0	0	0	0	0	26	243	0	0	269	12	0	5	0	17	454
Total	0	732	117	0	849	0	0	1	0	1	90	940	1	0	1031	69	0	39	0	108	1989
05:00 PM	1	190	24	0	215	0	0	1	0	1	17	233	1	0	251	11	0	10	0	21	488
05:15 PM	2	166	21	0	189	0	0	0	0	0	20	269	0	0	289	9	0	15	0	24	502
05:30 PM	0	155	20	1	176	0	0	1	0	1	27	248	0	0	275	23	1	15	0	39	491
05:45 PM	3	178	27	0	208	0	0	3	0	3	15	200	0	0	215	17	1	24	0	42	468
Total	6	689	92	1	788	0	0	5	0	5	79	950	1	0	1030	60	2	64	0	126	1949
06:00 PM	1	142	26	0	169	0	0	1	0	1	12	176	0	0	188	19	0	9	0	28	386
06:15 PM	0	118	14	0	132	0	0	1	0	1	21	147	0	0	168	22	0	8	0	30	331
06:30 PM	0	115	15	0	130	0	0	0	0	0	7	123	0	0	130	14	0	8	0	22	282
06:45 PM	1	87	12	0	100	0	0	1	0	1	10	147	0	0	157	20	0	13	0	33	291
Total	2	462	67	0	531	0	0	3	0	3	50	593	0	0	643	75	0	38	0	113	1290
Grand Total	40	7467	801	3	8311	8	8	58	0	74	583	8223	8	1	8815	683	14	592	0	1289	18489
Apprch %	0.5	89.8	9.6	0		10.8	10.8	78.4	0		6.6	93.3	0.1	0		53	1.1	45.9	0		
Total %	0.2	40.4	4.3	0	45	0	0	0.3	0	0.4	3.2	44.5	0	0	47.7	3.7	0.1	3.2	0	7	
Classes 1, 2, 3	39	7078	784	3	7904	8	8	57	0	73	570	7737	8	1	8316	671	14	580	0	1265	17558
% Classes 1, 2, 3	97.5	94.8	97.9	100	95.1	100	100	98.3	0	98.6	97.8	94.1	100	100	94.3	98.2	100	98	0	98.1	95
Classes 4, 5, 6, 7	1	324	17	0	342	0	0	1	0	1	13	407	0	0	420	12	0	12	0	24	787
% Classes 4, 5, 6, 7	2.5	4.3	2.1	0	4.1	0	0	1.7	0	1.4	2.2	4.9	0	0	4.8	1.8	0	2	0	1.9	4.3
Classes 8, 9, 10	0	65	0	0	65	0	0	0	0	0	0	79	0	0	79	0	0	0	0	0	144
% Classes 8, 9, 10	0	0.9	0	0	0.8	0	0	0	0	0	0	1	0	0	0.9	0	0	0	0	0	0.8
Classes 11, 12, 13	0	0	0	0	0	0	0	0	0	0	0	0	0	0	0	0	0	0	0	0	0
% Classes 11, 12, 13	0	0	0	0	0	0	0	0	0	0	0	0	0	0	0	0	0	0	0	0	0

DocuSign Envelope ID: 5C03745C-4B01-4834-A65D-B77F558A4F46

Quality Counts

920 Blairhill Rd, Ste B-106
Charlotte, NC 28217

File Name : 15411708 - Brevard Rd -- Bent Creek Ranch Rd
Site Code : 15411708
Start Date : 4/20/2021
Page No : 3

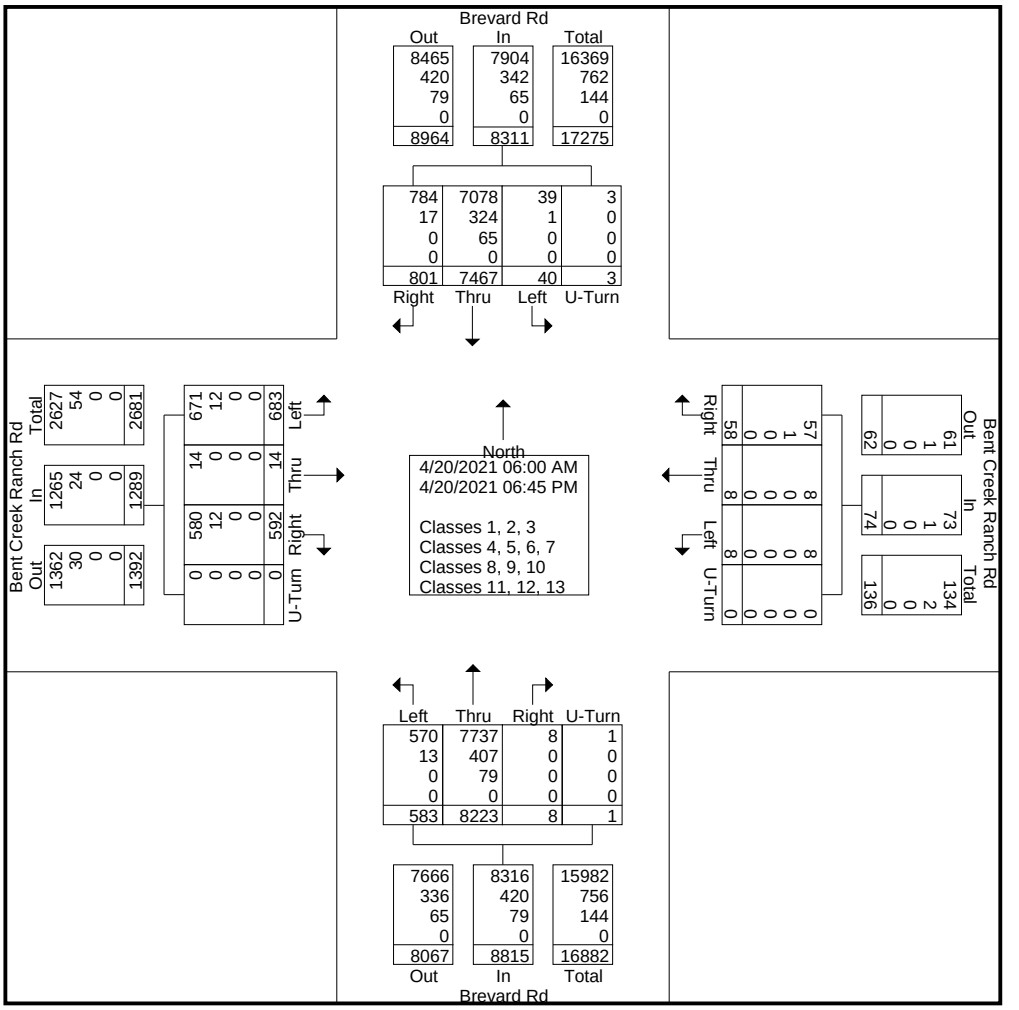

DocuSign Envelope ID: 5C03745C-4B01-4834-A65D-B77F558A4F46

Quality Counts

920 Blairhill Rd, Ste B-106
Charlotte, NC 28217

File Name : 15411708 - Brevard Rd -- Bent Creek Ranch Rd
Site Code : 15411708
Start Date : 4/20/2021
Page No : 4

	Brevard Rd Southbound					Bent Creek Ranch Rd Westbound					Brevard Rd Northbound					Bent Creek Ranch Rd Eastbound					
Start Time	Left	Thru	Right	U-Turn	App. Total	Left	Thru	Right	U-Turn	App. Total	Left	Thru	Right	U-Turn	App. Total	Left	Thru	Right	U-Turn	App. Total	Int. Total
Peak Hour Analysis From 06:00 AM to 11:45 AM - Peak 1 of 1																					
Peak Hour for Entire Intersection Begins at 07:30 AM																					
07:30 AM	0	**178**	6	0	**184**	0	0	**1**	0	**1**	5	139	0	0	144	**19**	0	13	0	**32**	361
07:45 AM	0	158	9	0	167	0	0	0	0	0	7	186	0	0	193	11	**1**	13	0	25	**385**
08:00 AM	1	141	11	0	153	0	0	0	0	0	**9**	**188**	0	0	**197**	8	0	15	0	23	373
08:15 AM	**3**	164	**15**	**1**	183	0	0	0	0	0	9	147	0	0	156	6	0	**16**	0	22	361
Total Volume	4	641	41	1	687	0	0	1	0	1	30	660	0	0	690	44	1	57	0	102	1480
% App. Total	0.6	93.3	6	0.1		0	0	100	0		4.3	95.7	0	0		43.1	1	55.9	0		
PHF	.333	.900	.683	.250	.933	.000	.000	.250	.000	.250	.833	.878	.000	.000	.876	.579	.250	.891	.000	.797	.961

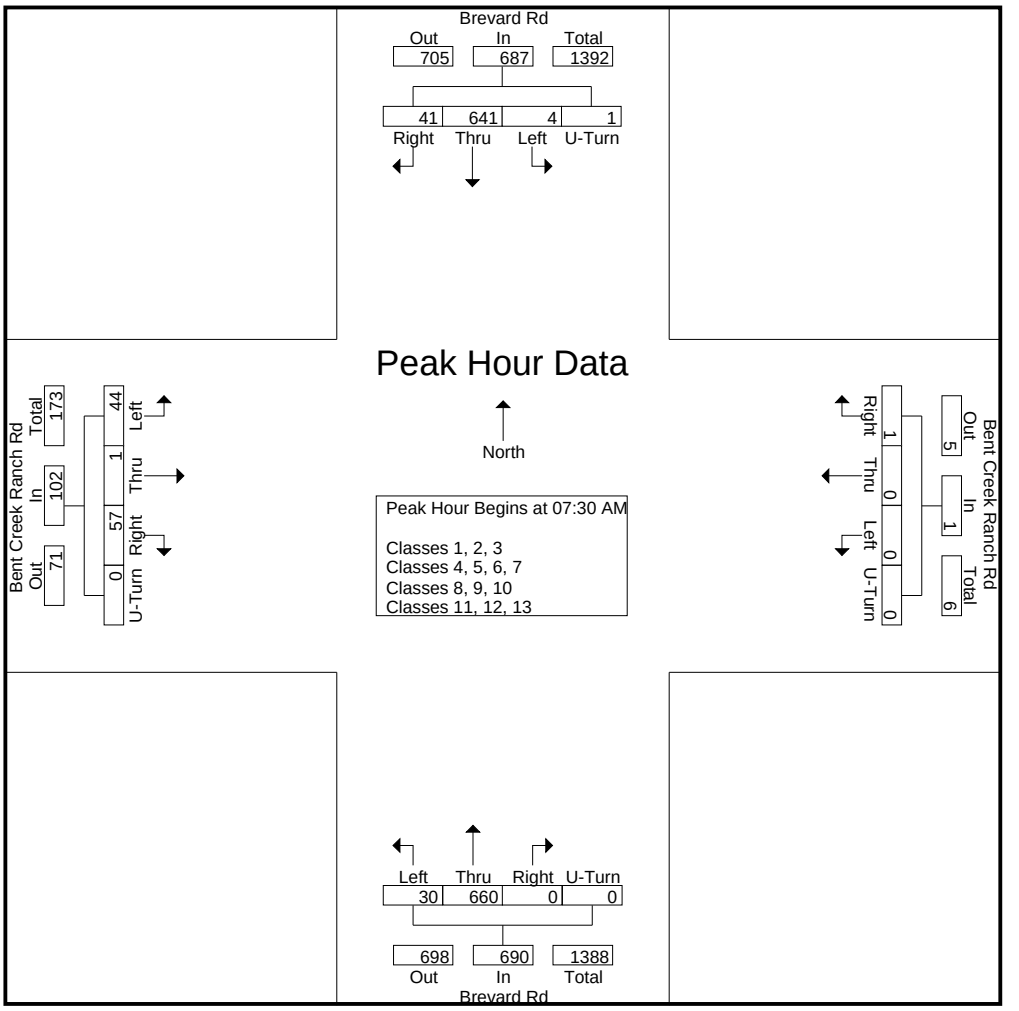

DocuSign Envelope ID: 5C03745C-4B01-4834-A65D-B77F558A4F46

Quality Counts

920 Blairhill Rd, Ste B-106
Charlotte, NC 28217

File Name : 15411708 - Brevard Rd -- Bent Creek Ranch Rd
Site Code : 15411708
Start Date : 4/20/2021
Page No : 5

	Brevard Rd Southbound					Bent Creek Ranch Rd Westbound					Brevard Rd Northbound					Bent Creek Ranch Rd Eastbound					
Start Time	Left	Thru	Right	U-Turn	App. Total	Left	Thru	Right	U-Turn	App. Total	Left	Thru	Right	U-Turn	App. Total	Left	Thru	Right	U-Turn	App. Total	Int. Total
Peak Hour Analysis From 12:00 PM to 06:45 PM - Peak 1 of 1																					
Peak Hour for Entire Intersection Begins at 03:45 PM																					
03:45 PM	**1**	161	24	0	186	**1**	**1**	0	0	**2**	16	227	**2**	0	245	19	0	10	0	29	462
04:00 PM	0	**207**	32	0	**239**	0	0	**1**	0	1	15	233	0	0	248	**22**	0	10	0	32	520
04:15 PM	0	176	**37**	0	213	0	0	0	0	0	21	**234**	0	0	255	14	0	6	0	20	488
04:30 PM	0	203	26	0	229	0	0	0	0	0	**28**	230	1	0	**259**	21	0	**18**	0	**39**	**527**
Total Volume	1	747	119	0	867	1	1	1	0	3	80	924	3	0	1007	76	0	44	0	120	1997
% App. Total	0.1	86.2	13.7	0		33.3	33.3	33.3	0		7.9	91.8	0.3	0		63.3	0	36.7	0		
PHF	.250	.902	.804	.000	.907	.250	.250	.250	.000	.375	.714	.987	.375	.000	.972	.864	.000	.611	.000	.769	.947

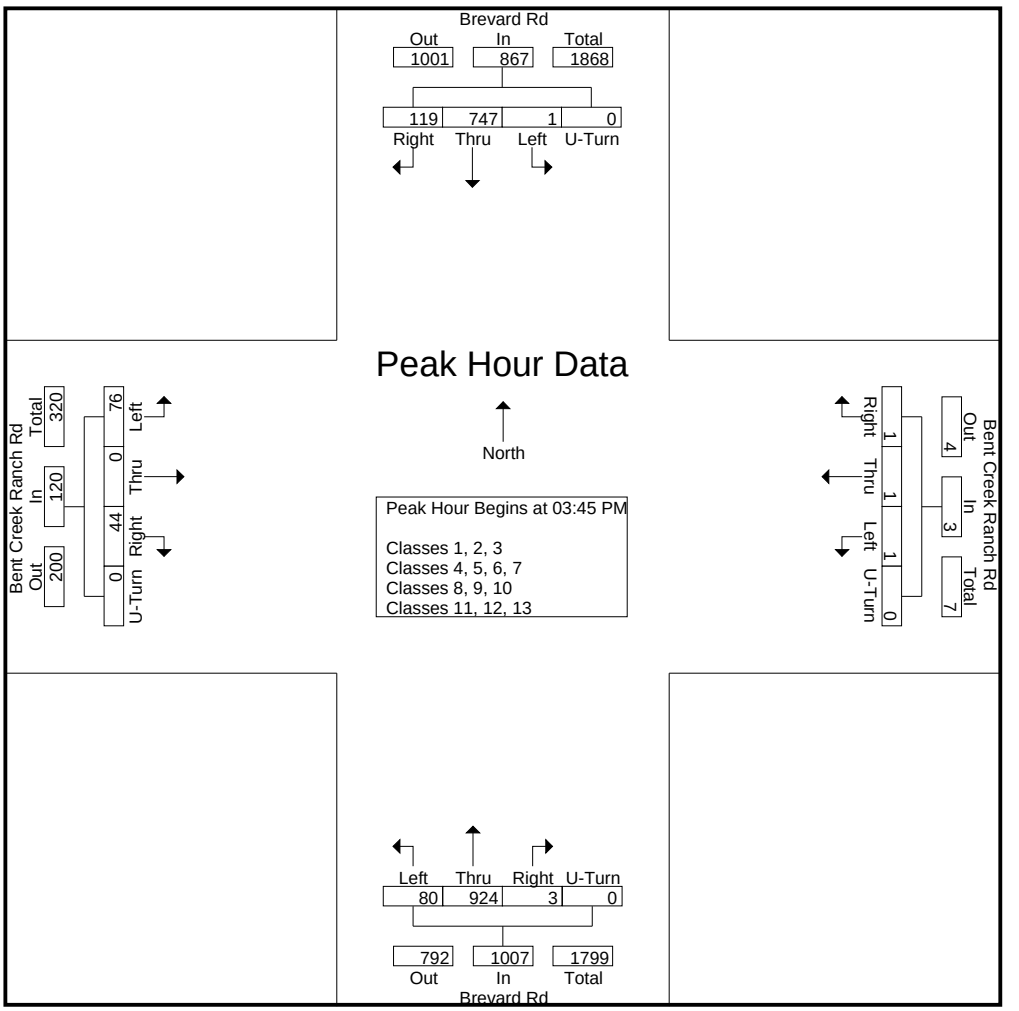

DocuSign Envelope ID: 5C03745C-4B01-4834-A65D-B77F558A4F46

Quality Counts

920 Blairhill Rd, Ste B-106
Charlotte, NC 28217

File Name : 15411708 - Brevard Rd -- Bent Creek Ranch Rd
Site Code : 15411708
Start Date : 4/20/2021
Page No : 1

Groups Printed- Classes 1, 2, 3

	Brevard Rd Southbound					Bent Creek Ranch Rd Westbound					Brevard Rd Northbound					Bent Creek Ranch Rd Eastbound					
Start Time	Left	Thru	Right	U-Turn	App. Total	Left	Thru	Right	U-Turn	App. Total	Left	Thru	Right	U-Turn	App. Total	Left	Thru	Right	U-Turn	App. Total	Int. Total
06:00 AM	0	59	3	0	62	0	0	0	0	0	0	22	0	0	22	4	0	8	0	12	96
06:15 AM	0	69	2	0	71	0	0	0	0	0	1	39	0	0	40	3	0	1	0	4	115
06:30 AM	0	137	3	0	140	0	0	0	0	0	0	71	0	0	71	2	0	2	0	4	215
06:45 AM	0	146	1	0	147	0	0	0	0	0	0	73	0	0	73	7	1	6	0	14	234
Total	0	411	9	0	420	0	0	0	0	0	1	205	0	0	206	16	1	17	0	34	660
07:00 AM	0	124	7	0	131	0	0	0	0	0	1	104	0	0	105	13	0	11	0	24	260
07:15 AM	0	127	4	0	131	0	0	0	0	0	2	132	0	0	134	8	0	11	0	19	284
07:30 AM	0	168	6	0	174	0	0	1	0	1	4	130	0	0	134	19	0	11	0	30	339
07:45 AM	0	149	9	0	158	0	0	0	0	0	7	178	0	0	185	11	1	13	0	25	368
Total	0	568	26	0	594	0	0	1	0	1	14	544	0	0	558	51	1	46	0	98	1251
08:00 AM	1	132	11	0	144	0	0	0	0	0	9	180	0	0	189	8	0	15	0	23	356
08:15 AM	3	155	15	1	174	0	0	0	0	0	8	141	0	0	149	6	0	16	0	22	345
08:30 AM	5	136	7	0	148	0	1	5	0	6	6	137	0	0	143	4	1	14	0	19	316
08:45 AM	3	140	17	0	160	1	1	4	0	6	11	119	0	0	130	8	2	8	0	18	314
Total	12	563	50	1	626	1	2	9	0	12	34	577	0	0	611	26	3	53	0	82	1331
09:00 AM	1	106	14	0	121	0	0	3	0	3	15	88	0	0	103	5	0	8	0	13	240
09:15 AM	1	98	13	0	112	1	1	0	0	2	13	83	1	0	97	7	0	13	0	20	231
09:30 AM	0	110	14	0	124	0	0	0	0	0	8	110	0	0	118	14	0	13	0	27	269
09:45 AM	0	99	13	0	112	0	0	0	0	0	4	101	0	1	106	10	0	7	0	17	235
Total	2	413	54	0	469	1	1	3	0	5	40	382	1	1	424	36	0	41	0	77	975
10:00 AM	0	96	14	0	110	0	0	1	0	1	12	100	0	0	112	9	0	12	0	21	244
10:15 AM	0	94	8	0	102	0	0	1	0	1	5	99	0	0	104	8	0	12	0	20	227
10:30 AM	0	125	12	0	137	1	0	0	0	1	10	98	0	0	108	14	0	13	0	27	273
10:45 AM	0	118	9	0	127	0	1	0	0	1	3	110	0	0	113	18	0	18	0	36	277
Total	0	433	43	0	476	1	1	2	0	4	30	407	0	0	437	49	0	55	0	104	1021
11:00 AM	0	120	17	0	137	0	0	0	0	0	13	119	0	0	132	12	0	11	0	23	292
11:15 AM	0	117	10	0	127	0	0	0	0	0	13	125	0	0	138	15	1	20	0	36	301
11:30 AM	2	95	10	0	107	0	0	0	0	0	11	125	0	0	136	12	0	10	0	22	265
11:45 AM	6	140	20	1	167	0	0	1	0	1	10	137	0	0	147	12	0	7	0	19	334
Total	8	472	57	1	538	0	0	1	0	1	47	506	0	0	553	51	1	48	0	100	1192
12:00 PM	5	130	14	0	149	1	2	13	0	16	13	108	0	0	121	19	1	13	0	33	319
12:15 PM	0	137	11	0	148	0	0	2	0	2	8	128	0	0	136	15	0	14	0	29	315
12:30 PM	0	170	14	0	184	1	0	0	0	1	15	165	0	0	180	16	0	10	0	26	391
12:45 PM	0	137	11	0	148	0	0	1	0	1	6	153	0	0	159	22	0	16	0	38	346
Total	5	574	50	0	629	2	2	16	0	20	42	554	0	0	596	72	1	53	0	126	1371
01:00 PM	1	120	11	0	132	0	0	4	0	4	9	147	2	0	158	21	0	12	0	33	327
01:15 PM	0	131	23	0	154	1	0	3	0	4	5	150	0	0	155	10	0	13	0	23	336
01:30 PM	0	136	20	0	156	0	0	0	0	0	17	146	0	0	163	10	0	11	0	21	340
01:45 PM	1	160	10	0	171	0	0	2	0	2	11	144	0	0	155	10	0	8	0	18	346
Total	2	547	64	0	613	1	0	9	0	10	42	587	2	0	631	51	0	44	0	95	1349
02:00 PM	0	163	15	0	178	0	0	1	0	1	15	153	0	0	168	16	1	12	0	29	376
02:15 PM	2	167	26	0	195	0	0	3	0	3	6	172	0	0	178	12	2	11	0	25	401
02:30 PM	0	177	15	0	192	0	0	0	0	0	10	184	0	0	194	19	0	10	0	29	415
02:45 PM	0	166	20	0	186	1	1	1	0	3	12	205	1	0	218	21	1	17	0	39	446
Total	2	673	76	0	751	1	1	5	0	7	43	714	1	0	758	68	4	50	0	122	1638
03:00 PM	0	138	16	0	154	0	0	1	0	1	17	226	0	0	243	11	0	6	0	17	415
03:15 PM	0	168	27	0	195	0	0	0	0	0	22	244	0	0	266	11	0	9	0	20	481
03:30 PM	0	147	15	0	162	0	0	1	0	1	8	201	0	0	209	10	1	8	0	19	391

DocuSign Envelope ID: 5C03745C-4B01-4834-A65D-B77F558A4F46

Quality Counts

920 Blairhill Rd, Ste B-106
Charlotte, NC 28217

File Name : 15411708 - Brevard Rd -- Bent Creek Ranch Rd
Site Code : 15411708
Start Date : 4/20/2021
Page No : 2

Groups Printed- Classes 1, 2, 3

	Brevard Rd Southbound					Bent Creek Ranch Rd Westbound					Brevard Rd Northbound					Bent Creek Ranch Rd Eastbound					
Start Time	Left	Thru	Right	U-Turn	App. Total	Left	Thru	Right	U-Turn	App. Total	Left	Thru	Right	U-Turn	App. Total	Left	Thru	Right	U-Turn	App. Total	Int. Total
03:45 PM	1	148	24	0	173	1	1	0	0	2	16	213	2	0	231	19	0	10	0	29	435
Total	1	601	82	0	684	1	1	2	0	4	63	884	2	0	949	51	1	33	0	85	1722
04:00 PM	0	197	31	0	228	0	0	1	0	1	14	226	0	0	240	20	0	10	0	30	499
04:15 PM	0	167	36	0	203	0	0	0	0	0	20	224	0	0	244	14	0	6	0	20	467
04:30 PM	0	194	26	0	220	0	0	0	0	0	27	214	1	0	242	19	0	18	0	37	499
04:45 PM	0	143	22	0	165	0	0	0	0	0	26	232	0	0	258	12	0	5	0	17	440
Total	0	701	115	0	816	0	0	1	0	1	87	896	1	0	984	65	0	39	0	104	1905
05:00 PM	1	186	23	0	210	0	0	1	0	1	17	219	1	0	237	11	0	10	0	21	469
05:15 PM	2	162	21	0	185	0	0	0	0	0	19	255	0	0	274	9	0	15	0	24	483
05:30 PM	0	153	20	1	174	0	0	1	0	1	26	242	0	0	268	23	1	15	0	39	482
05:45 PM	2	173	27	0	202	0	0	3	0	3	15	193	0	0	208	17	1	24	0	42	455
Total	5	674	91	1	771	0	0	5	0	5	77	909	1	0	987	60	2	64	0	126	1889
06:00 PM	1	136	26	0	163	0	0	1	0	1	12	167	0	0	179	19	0	8	0	27	370
06:15 PM	0	114	14	0	128	0	0	1	0	1	21	143	0	0	164	22	0	8	0	30	323
06:30 PM	0	112	15	0	127	0	0	0	0	0	7	120	0	0	127	14	0	8	0	22	276
06:45 PM	1	86	12	0	99	0	0	1	0	1	10	142	0	0	152	20	0	13	0	33	285
Total	2	448	67	0	517	0	0	3	0	3	50	572	0	0	622	75	0	37	0	112	1254
Grand Total	39	7078	784	3	7904	8	8	57	0	73	570	7737	8	1	8316	671	14	580	0	1265	17558
Apprch %	0.5	89.5	9.9	0		11	11	78.1	0		6.9	93	0.1	0		53	1.1	45.8	0		
Total %	0.2	40.3	4.5	0	45	0	0	0.3	0	0.4	3.2	44.1	0	0	47.4	3.8	0.1	3.3	0	7.2	

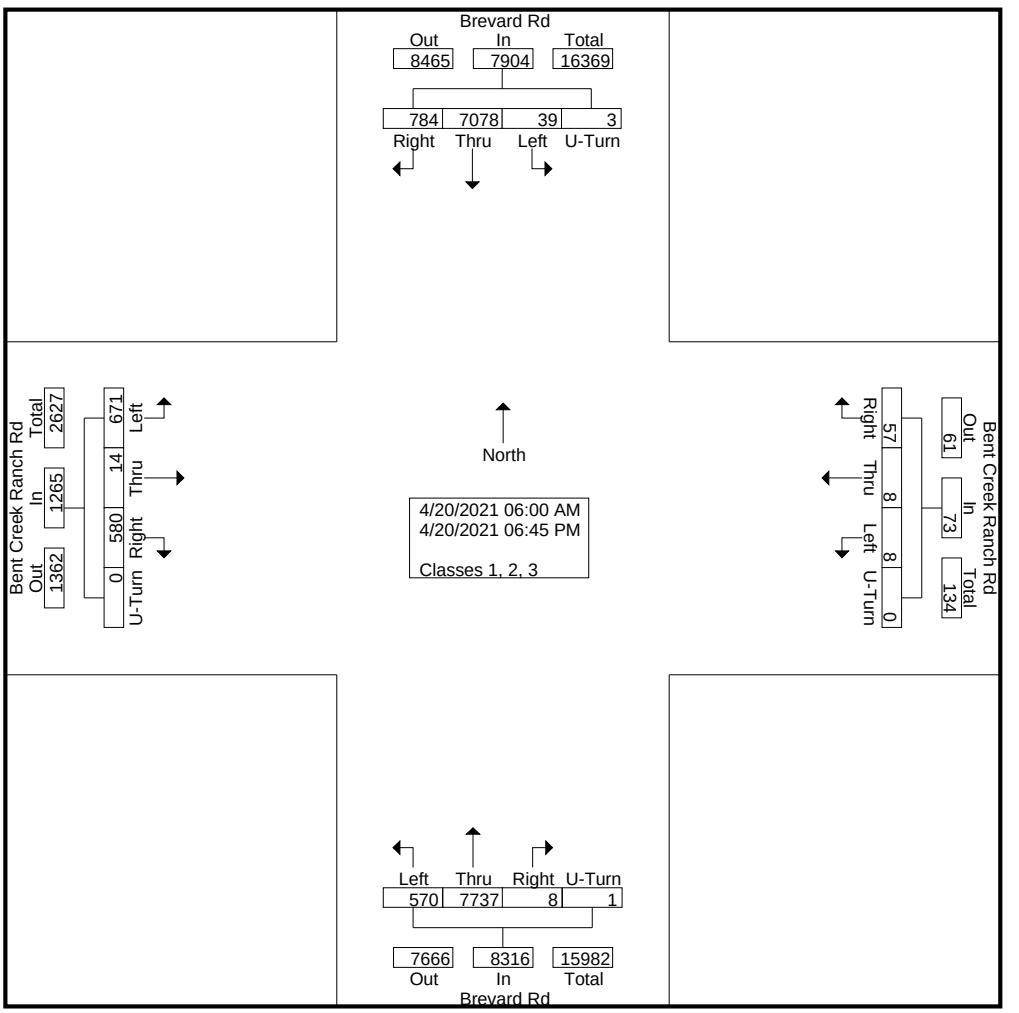

DocuSign Envelope ID: 5C03745C-4B01-4834-A65D-B77F558A4F46

Quality Counts

920 Blairhill Rd, Ste B-106
Charlotte, NC 28217

File Name : 15411708 - Brevard Rd -- Bent Creek Ranch Rd
Site Code : 15411708
Start Date : 4/20/2021
Page No : 3

	Brevard Rd Southbound					Bent Creek Ranch Rd Westbound					Brevard Rd Northbound					Bent Creek Ranch Rd Eastbound					
Start Time	Left	Thru	Right	U-Turn	App. Total	Left	Thru	Right	U-Turn	App. Total	Left	Thru	Right	U-Turn	App. Total	Left	Thru	Right	U-Turn	App. Total	Int. Total
Peak Hour Analysis From 06:00 AM to 11:45 AM - Peak 1 of 1																					
Peak Hour for Entire Intersection Begins at 07:30 AM																					
07:30 AM	0	**168**	6	0	**174**	0	0	**1**	0	**1**	4	130	0	0	134	**19**	0	11	0	**30**	339
07:45 AM	0	149	9	0	158	0	0	0	0	0	7	178	0	0	185	11	**1**	13	0	25	**368**
08:00 AM	1	132	11	0	144	0	0	0	0	0	**9**	**180**	0	0	**189**	8	0	15	0	23	356
08:15 AM	**3**	155	**15**	**1**	174	0	0	0	0	0	8	141	0	0	149	6	0	**16**	0	22	345
Total Volume	4	604	41	1	650	0	0	1	0	1	28	629	0	0	657	44	1	55	0	100	1408
% App. Total	0.6	92.9	6.3	0.2		0	0	100	0		4.3	95.7	0	0		44	1	55	0		
PHF	.333	.899	.683	.250	.934	.000	.000	.250	.000	.250	.778	.874	.000	.000	.869	.579	.250	.859	.000	.833	.957

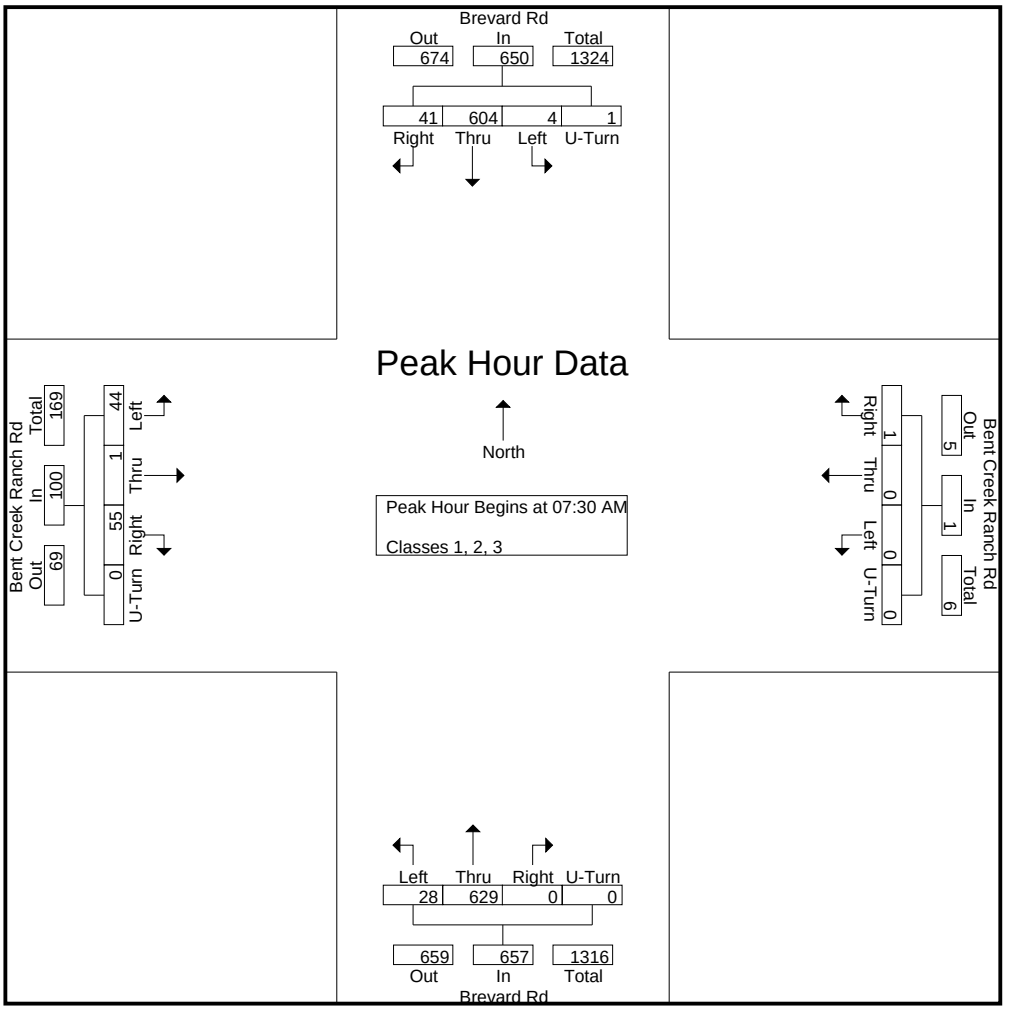

DocuSign Envelope ID: 5C03745C-4B01-4834-A65D-B77F558A4F46

Quality Counts

920 Blairhill Rd, Ste B-106
Charlotte, NC 28217

File Name : 15411708 - Brevard Rd -- Bent Creek Ranch Rd
Site Code : 15411708
Start Date : 4/20/2021
Page No : 4

	Brevard Rd Southbound					Bent Creek Ranch Rd Westbound					Brevard Rd Northbound					Bent Creek Ranch Rd Eastbound					
Start Time	Left	Thru	Right	U-Turn	App. Total	Left	Thru	Right	U-Turn	App. Total	Left	Thru	Right	U-Turn	App. Total	Left	Thru	Right	U-Turn	App. Total	Int. Total
Peak Hour Analysis From 12:00 PM to 06:45 PM - Peak 1 of 1																					
Peak Hour for Entire Intersection Begins at 04:00 PM																					
04:00 PM	0	**197**	31	0	**228**	0	0	**1**	0	**1**	14	226	0	0	240	**20**	0	10	0	30	**499**
04:15 PM	0	167	**36**	0	203	0	0	0	0	0	20	224	0	0	244	14	0	6	0	20	467
04:30 PM	0	194	26	0	220	0	0	0	0	0	**27**	214	**1**	0	242	19	0	**18**	0	**37**	499
04:45 PM	0	143	22	0	165	0	0	0	0	0	26	**232**	0	0	**258**	12	0	5	0	17	440
Total Volume	0	701	115	0	816	0	0	1	0	1	87	896	1	0	984	65	0	39	0	104	1905
% App. Total	0	85.9	14.1	0		0	0	100	0		8.8	91.1	0.1	0		62.5	0	37.5	0		
PHF	.000	.890	.799	.000	.895	.000	.000	.250	.000	.250	.806	.966	.250	.000	.953	.813	.000	.542	.000	.703	.954

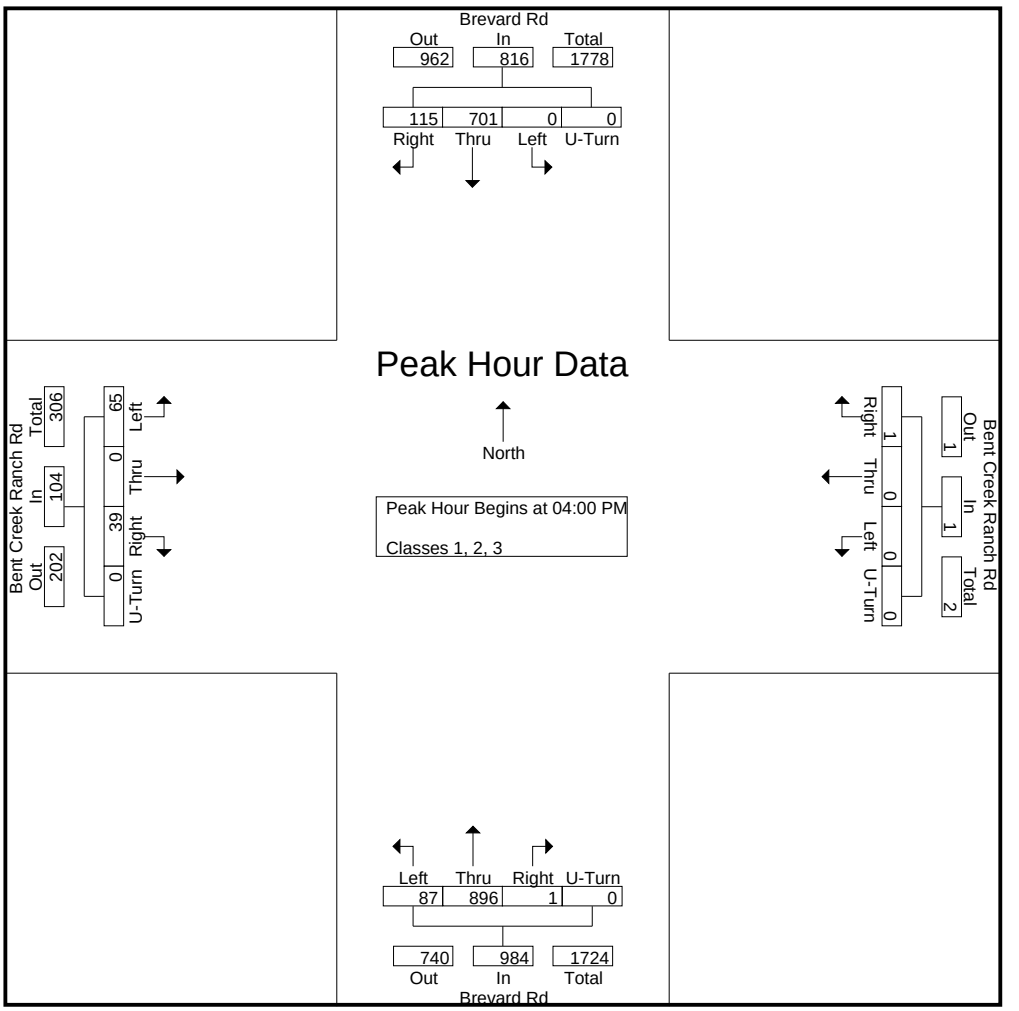

DocuSign Envelope ID: 5C03745C-4B01-4834-A65D-B77F558A4F46

Quality Counts

920 Blairhill Rd, Ste B-106
Charlotte, NC 28217

File Name : 15411708 - Brevard Rd -- Bent Creek Ranch Rd
Site Code : 15411708
Start Date : 4/20/2021
Page No : 1

Groups Printed- Classes 4, 5, 6, 7

	Brevard Rd Southbound					Bent Creek Ranch Rd Westbound					Brevard Rd Northbound					Bent Creek Ranch Rd Eastbound					
Start Time	Left	Thru	Right	U-Turn	App. Total	Left	Thru	Right	U-Turn	App. Total	Left	Thru	Right	U-Turn	App. Total	Left	Thru	Right	U-Turn	App. Total	Int. Total
06:00 AM	0	0	0	0	0	0	0	0	0	0	0	5	0	0	5	0	0	0	0	0	5
06:15 AM	0	1	1	0	2	0	0	0	0	0	0	12	0	0	12	0	0	0	0	0	14
06:30 AM	0	5	1	0	6	0	0	1	0	1	0	6	0	0	6	0	0	0	0	0	13
06:45 AM	0	4	0	0	4	0	0	0	0	0	0	7	0	0	7	0	0	0	0	0	11
Total	0	10	2	0	12	0	0	1	0	1	0	30	0	0	30	0	0	0	0	0	43
07:00 AM	0	4	1	0	5	0	0	0	0	0	0	2	0	0	2	0	0	0	0	0	7
07:15 AM	0	5	0	0	5	0	0	0	0	0	0	4	0	0	4	1	0	0	0	1	10
07:30 AM	0	9	0	0	9	0	0	0	0	0	1	9	0	0	10	0	0	2	0	2	21
07:45 AM	0	6	0	0	6	0	0	0	0	0	0	7	0	0	7	0	0	0	0	0	13
Total	0	24	1	0	25	0	0	0	0	0	1	22	0	0	23	1	0	2	0	3	51
08:00 AM	0	9	0	0	9	0	0	0	0	0	0	5	0	0	5	0	0	0	0	0	14
08:15 AM	0	7	0	0	7	0	0	0	0	0	1	4	0	0	5	0	0	0	0	0	12
08:30 AM	0	6	2	0	8	0	0	0	0	0	1	8	0	0	9	0	0	0	0	0	17
08:45 AM	0	11	0	0	11	0	0	0	0	0	0	8	0	0	8	1	0	1	0	2	21
Total	0	33	2	0	35	0	0	0	0	0	2	25	0	0	27	1	0	1	0	2	64
09:00 AM	0	6	1	0	7	0	0	0	0	0	0	9	0	0	9	0	0	0	0	0	16
09:15 AM	0	9	0	0	9	0	0	0	0	0	0	8	0	0	8	0	0	0	0	0	17
09:30 AM	0	5	1	0	6	0	0	0	0	0	0	7	0	0	7	0	0	0	0	0	13
09:45 AM	0	8	0	0	8	0	0	0	0	0	0	6	0	0	6	0	0	0	0	0	14
Total	0	28	2	0	30	0	0	0	0	0	0	30	0	0	30	0	0	0	0	0	60
10:00 AM	0	3	0	0	3	0	0	0	0	0	0	12	0	0	12	2	0	0	0	2	17
10:15 AM	0	10	0	0	10	0	0	0	0	0	1	5	0	0	6	0	0	1	0	1	17
10:30 AM	0	4	1	0	5	0	0	0	0	0	1	7	0	0	8	0	0	0	0	0	13
10:45 AM	0	8	1	0	9	0	0	0	0	0	1	15	0	0	16	0	0	1	0	1	26
Total	0	25	2	0	27	0	0	0	0	0	3	39	0	0	42	2	0	2	0	4	73
11:00 AM	0	9	1	0	10	0	0	0	0	0	0	5	0	0	5	1	0	1	0	2	17
11:15 AM	0	10	1	0	11	0	0	0	0	0	0	8	0	0	8	0	0	1	0	1	20
11:30 AM	0	9	0	0	9	0	0	0	0	0	0	12	0	0	12	0	0	0	0	0	21
11:45 AM	0	5	0	0	5	0	0	0	0	0	0	4	0	0	4	0	0	0	0	0	9
Total	0	33	2	0	35	0	0	0	0	0	0	29	0	0	29	1	0	2	0	3	67
12:00 PM	0	9	0	0	9	0	0	0	0	0	0	5	0	0	5	0	0	0	0	0	14
12:15 PM	0	5	0	0	5	0	0	0	0	0	1	6	0	0	7	1	0	0	0	1	13
12:30 PM	0	5	0	0	5	0	0	0	0	0	0	11	0	0	11	0	0	0	0	0	16
12:45 PM	0	6	0	0	6	0	0	0	0	0	1	4	0	0	5	1	0	0	0	1	12
Total	0	25	0	0	25	0	0	0	0	0	2	26	0	0	28	2	0	0	0	2	55
01:00 PM	0	7	0	0	7	0	0	0	0	0	0	6	0	0	6	0	0	2	0	2	15
01:15 PM	0	6	0	0	6	0	0	0	0	0	0	6	0	0	6	1	0	0	0	1	13
01:30 PM	0	9	0	0	9	0	0	0	0	0	0	12	0	0	12	0	0	0	0	0	21
01:45 PM	0	9	0	0	9	0	0	0	0	0	0	8	0	0	8	0	0	1	0	1	18
Total	0	31	0	0	31	0	0	0	0	0	0	32	0	0	32	1	0	3	0	4	67
02:00 PM	0	7	1	0	8	0	0	0	0	0	0	5	0	0	5	0	0	0	0	0	13
02:15 PM	0	7	1	0	8	0	0	0	0	0	0	7	0	0	7	0	0	0	0	0	15
02:30 PM	0	7	1	0	8	0	0	0	0	0	0	10	0	0	10	0	0	0	0	0	18
02:45 PM	0	4	0	0	4	0	0	0	0	0	0	8	0	0	8	0	0	0	0	0	12
Total	0	25	3	0	28	0	0	0	0	0	0	30	0	0	30	0	0	0	0	0	58
03:00 PM	0	6	0	0	6	0	0	0	0	0	0	7	0	0	7	0	0	1	0	1	14
03:15 PM	0	12	0	0	12	0	0	0	0	0	0	15	0	0	15	0	0	0	0	0	27
03:30 PM	0	8	0	0	8	0	0	0	0	0	0	16	0	0	16	0	0	0	0	0	24

DocuSign Envelope ID: 5C03745C-4B01-4834-A65D-B77F558A4F46

Quality Counts

920 Blairhill Rd, Ste B-106
Charlotte, NC 28217

File Name : 15411708 - Brevard Rd -- Bent Creek Ranch Rd
Site Code : 15411708
Start Date : 4/20/2021

Groups Printed- Classes 4, 5, 6, 7

	Brevard Rd Southbound					Bent Creek Ranch Rd Westbound					Brevard Rd Northbound					Bent Creek Ranch Rd Eastbound					
Start Time	Left	Thru	Right	U-Turn	App. Total	Left	Thru	Right	U-Turn	App. Total	Left	Thru	Right	U-Turn	App. Total	Left	Thru	Right	U-Turn	App. Total	Int. Total
03:45 PM	0	13	0	0	13	0	0	0	0	0	0	13	0	0	13	0	0	0	0	0	26
Total	0	39	0	0	39	0	0	0	0	0	0	51	0	0	51	0	0	1	0	1	91
04:00 PM	0	9	1	0	10	0	0	0	0	0	1	6	0	0	7	2	0	0	0	2	19
04:15 PM	0	8	1	0	9	0	0	0	0	0	1	7	0	0	8	0	0	0	0	0	17
04:30 PM	0	8	0	0	8	0	0	0	0	0	1	16	0	0	17	2	0	0	0	2	27
04:45 PM	0	3	0	0	3	0	0	0	0	0	0	8	0	0	8	0	0	0	0	0	11
Total	0	28	2	0	30	0	0	0	0	0	3	37	0	0	40	4	0	0	0	4	74
05:00 PM	0	3	1	0	4	0	0	0	0	0	0	14	0	0	14	0	0	0	0	0	18
05:15 PM	0	2	0	0	2	0	0	0	0	0	1	13	0	0	14	0	0	0	0	0	16
05:30 PM	0	2	0	0	2	0	0	0	0	0	1	4	0	0	5	0	0	0	0	0	7
05:45 PM	1	3	0	0	4	0	0	0	0	0	0	6	0	0	6	0	0	0	0	0	10
Total	1	10	1	0	12	0	0	0	0	0	2	37	0	0	39	0	0	0	0	0	51
06:00 PM	0	6	0	0	6	0	0	0	0	0	0	8	0	0	8	0	0	1	0	1	15
06:15 PM	0	4	0	0	4	0	0	0	0	0	0	3	0	0	3	0	0	0	0	0	7
06:30 PM	0	3	0	0	3	0	0	0	0	0	0	3	0	0	3	0	0	0	0	0	6
06:45 PM	0	0	0	0	0	0	0	0	0	0	0	5	0	0	5	0	0	0	0	0	5
Total	0	13	0	0	13	0	0	0	0	0	0	19	0	0	19	0	0	1	0	1	33
Grand Total	1	324	17	0	342	0	0	1	0	1	13	407	0	0	420	12	0	12	0	24	787
Apprch %	0.3	94.7	5	0		0	0	100	0		3.1	96.9	0	0		50	0	50	0		
Total %	0.1	41.2	2.2	0	43.5	0	0	0.1	0	0.1	1.7	51.7	0	0	53.4	1.5	0	1.5	0	3	

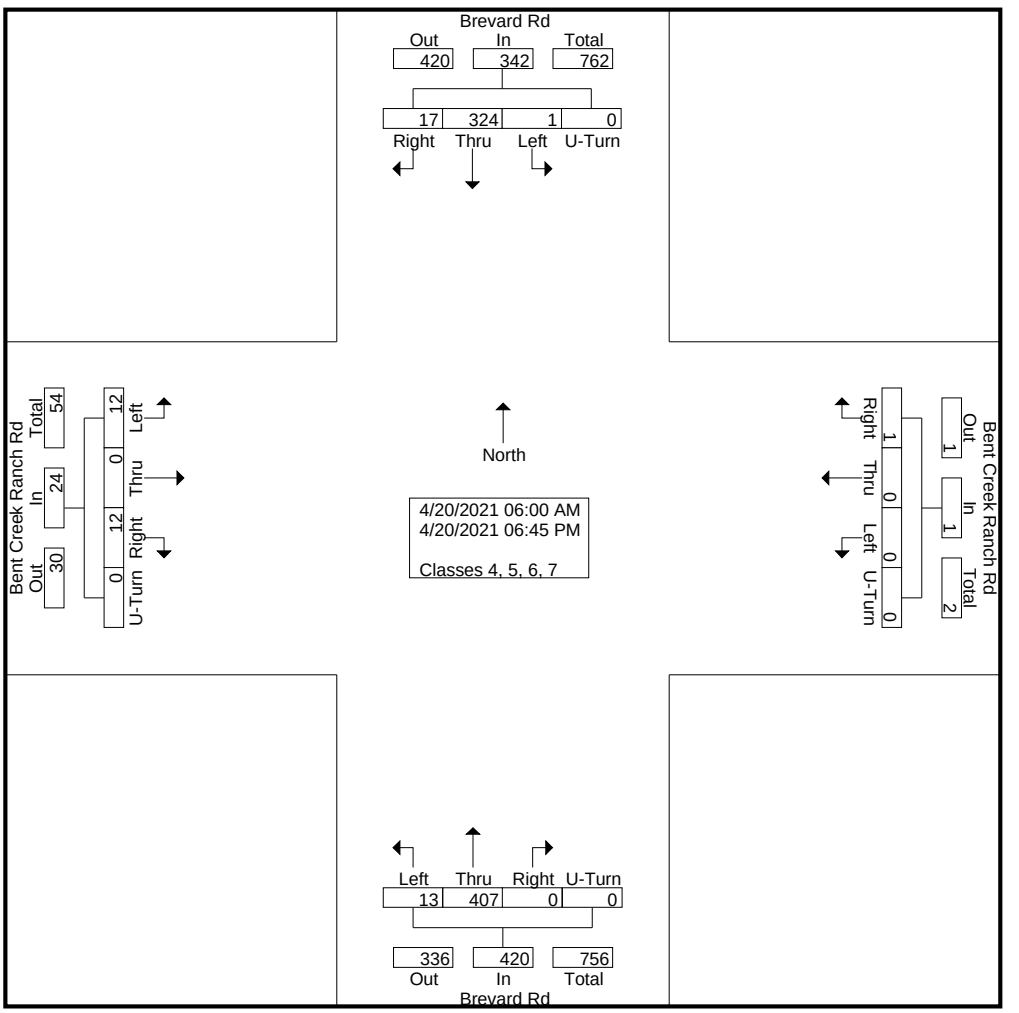

DocuSign Envelope ID: 5C03745C-4B01-4834-A65D-B77F558A4F46

Quality Counts

920 Blairhill Rd, Ste B-106
Charlotte, NC 28217

File Name : 15411708 - Brevard Rd -- Bent Creek Ranch Rd
Site Code : 15411708
Start Date : 4/20/2021
Page No : 3

	Brevard Rd Southbound					Bent Creek Ranch Rd Westbound					Brevard Rd Northbound					Bent Creek Ranch Rd Eastbound					
Start Time	Left	Thru	Right	U-Turn	App. Total	Left	Thru	Right	U-Turn	App. Total	Left	Thru	Right	U-Turn	App. Total	Left	Thru	Right	U-Turn	App. Total	Int. Total
Peak Hour Analysis From 06:00 AM to 11:45 AM - Peak 1 of 1																					
Peak Hour for Entire Intersection Begins at 10:45 AM																					
10:45 AM	0	8	**1**	0	9	0	0	0	0	0	**1**	**15**	0	0	**16**	0	0	**1**	0	1	**26**
11:00 AM	0	9	1	0	10	0	0	0	0	0	0	5	0	0	5	**1**	0	1	0	**2**	17
11:15 AM	0	**10**	1	0	**11**	0	0	0	0	0	0	8	0	0	8	0	0	1	0	1	20
11:30 AM	0	9	0	0	9	0	0	0	0	0	0	12	0	0	12	0	0	0	0	0	21
Total Volume	0	36	3	0	39	0	0	0	0	0	1	40	0	0	41	1	0	3	0	4	84
% App. Total	0	92.3	7.7	0		0	0	0	0		2.4	97.6	0	0		25	0	75	0		
PHF	.000	.900	.750	.000	.886	.000	.000	.000	.000	.000	.250	.667	.000	.000	.641	.250	.000	.750	.000	.500	.808

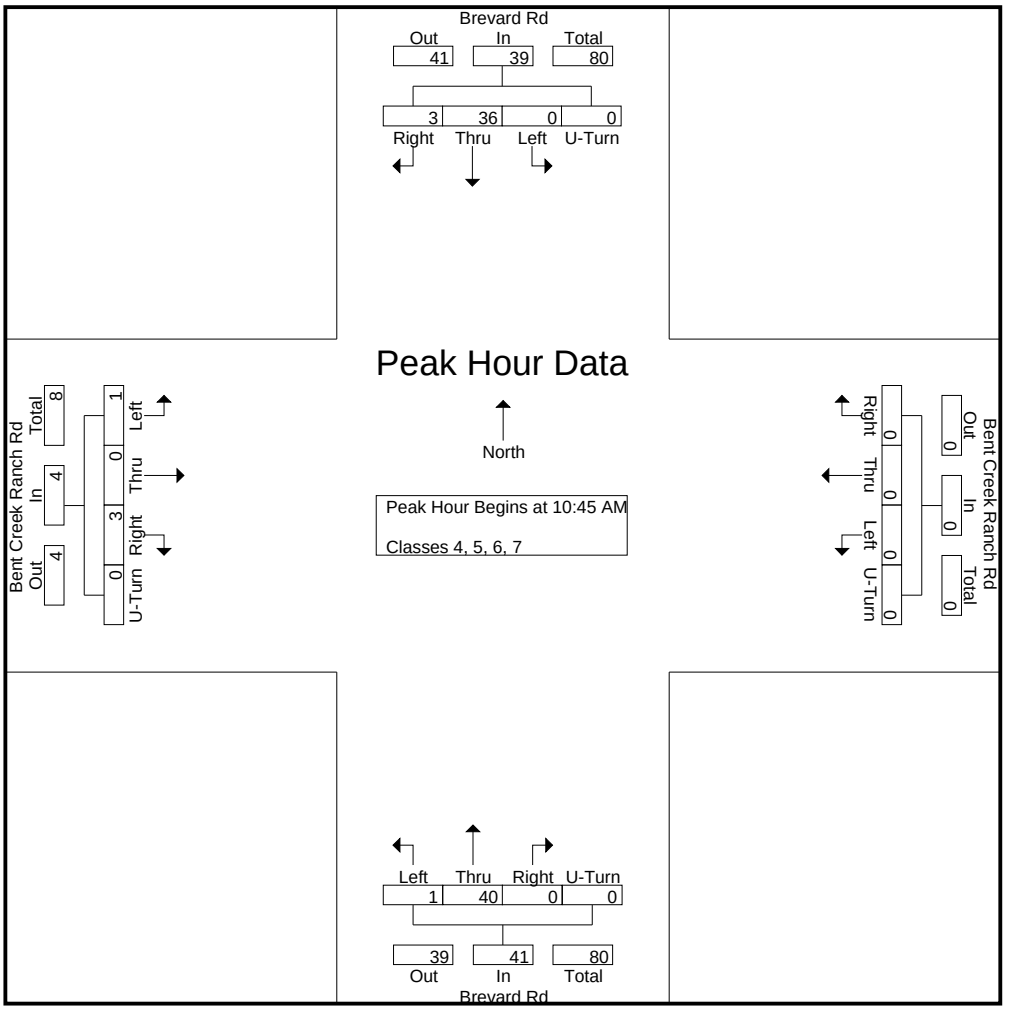

DocuSign Envelope ID: 5C03745C-4B01-4834-A65D-B77F558A4F46

Quality Counts

920 Blairhill Rd, Ste B-106
Charlotte, NC 28217

File Name : 15411708 - Brevard Rd -- Bent Creek Ranch Rd
Site Code : 15411708
Start Date : 4/20/2021
Page No : 4

	Brevard Rd Southbound					Bent Creek Ranch Rd Westbound					Brevard Rd Northbound					Bent Creek Ranch Rd Eastbound					
Start Time	Left	Thru	Right	U-Turn	App. Total	Left	Thru	Right	U-Turn	App. Total	Left	Thru	Right	U-Turn	App. Total	Left	Thru	Right	U-Turn	App. Total	Int. Total
Peak Hour Analysis From 12:00 PM to 06:45 PM - Peak 1 of 1																					
Peak Hour for Entire Intersection Begins at 03:15 PM																					
03:15 PM	0	12	0	0	12	0	0	0	0	0	0	15	0	0	15	0	0	0	0	0	**27**
03:30 PM	0	8	0	0	8	0	0	0	0	0	0	**16**	0	0	**16**	0	0	0	0	0	24
03:45 PM	0	**13**	0	0	**13**	0	0	0	0	0	0	13	0	0	13	0	0	0	0	0	26
04:00 PM	0	9	**1**	0	10	0	0	0	0	0	**1**	6	0	0	7	**2**	0	0	0	**2**	19
Total Volume	0	42	1	0	43	0	0	0	0	0	1	50	0	0	51	2	0	0	0	2	96
% App. Total	0	97.7	2.3	0		0	0	0	0		2	98	0	0		100	0	0	0		
PHF	.000	.808	.250	.000	.827	.000	.000	.000	.000	.000	.250	.781	.000	.000	.797	.250	.000	.000	.000	.250	.889

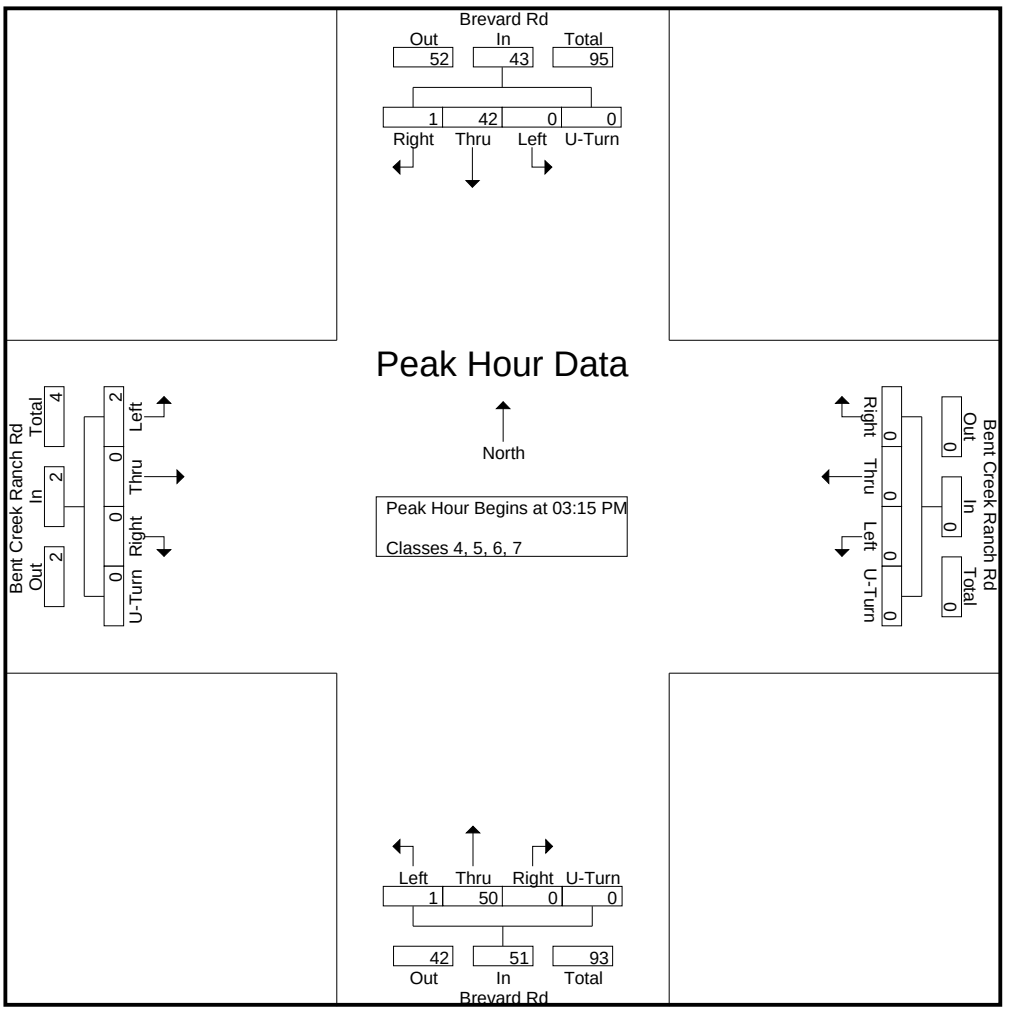

DocuSign Envelope ID: 5C03745C-4B01-4834-A65D-B77F558A4F46

Quality Counts

920 Blairhill Rd, Ste B-106
Charlotte, NC 28217

File Name : 15411708 - Brevard Rd -- Bent Creek Ranch Rd
Site Code : 15411708
Start Date : 4/20/2021

Groups Printed- Classes 8, 9, 10

	Brevard Rd Southbound					Bent Creek Ranch Rd Westbound					Brevard Rd Northbound					Bent Creek Ranch Rd Eastbound					
Start Time	Left	Thru	Right	U-Turn	App. Total	Left	Thru	Right	U-Turn	App. Total	Left	Thru	Right	U-Turn	App. Total	Left	Thru	Right	U-Turn	App. Total	Int. Total
06:00 AM	0	1	0	0	1	0	0	0	0	0	0	1	0	0	1	0	0	0	0	0	2
06:15 AM	0	0	0	0	0	0	0	0	0	0	0	0	0	0	0	0	0	0	0	0	0
06:30 AM	0	0	0	0	0	0	0	0	0	0	0	0	0	0	0	0	0	0	0	0	0
06:45 AM	0	0	0	0	0	0	0	0	0	0	0	1	0	0	1	0	0	0	0	0	1
Total	0	1	0	0	1	0	0	0	0	0	0	2	0	0	2	0	0	0	0	0	3
07:00 AM	0	2	0	0	2	0	0	0	0	0	0	1	0	0	1	0	0	0	0	0	3
07:15 AM	0	0	0	0	0	0	0	0	0	0	0	1	0	0	1	0	0	0	0	0	1
07:30 AM	0	1	0	0	1	0	0	0	0	0	0	0	0	0	0	0	0	0	0	0	1
07:45 AM	0	3	0	0	3	0	0	0	0	0	0	1	0	0	1	0	0	0	0	0	4
Total	0	6	0	0	6	0	0	0	0	0	0	3	0	0	3	0	0	0	0	0	9
08:00 AM	0	0	0	0	0	0	0	0	0	0	0	3	0	0	3	0	0	0	0	0	3
08:15 AM	0	2	0	0	2	0	0	0	0	0	0	2	0	0	2	0	0	0	0	0	4
08:30 AM	0	2	0	0	2	0	0	0	0	0	0	0	0	0	0	0	0	0	0	0	2
08:45 AM	0	1	0	0	1	0	0	0	0	0	0	1	0	0	1	0	0	0	0	0	2
Total	0	5	0	0	5	0	0	0	0	0	0	6	0	0	6	0	0	0	0	0	11
09:00 AM	0	2	0	0	2	0	0	0	0	0	0	1	0	0	1	0	0	0	0	0	3
09:15 AM	0	4	0	0	4	0	0	0	0	0	0	2	0	0	2	0	0	0	0	0	6
09:30 AM	0	1	0	0	1	0	0	0	0	0	0	3	0	0	3	0	0	0	0	0	4
09:45 AM	0	1	0	0	1	0	0	0	0	0	0	2	0	0	2	0	0	0	0	0	3
Total	0	8	0	0	8	0	0	0	0	0	0	8	0	0	8	0	0	0	0	0	16
10:00 AM	0	4	0	0	4	0	0	0	0	0	0	4	0	0	4	0	0	0	0	0	8
10:15 AM	0	1	0	0	1	0	0	0	0	0	0	1	0	0	1	0	0	0	0	0	2
10:30 AM	0	4	0	0	4	0	0	0	0	0	0	3	0	0	3	0	0	0	0	0	7
10:45 AM	0	2	0	0	2	0	0	0	0	0	0	0	0	0	0	0	0	0	0	0	2
Total	0	11	0	0	11	0	0	0	0	0	0	8	0	0	8	0	0	0	0	0	19
11:00 AM	0	1	0	0	1	0	0	0	0	0	0	4	0	0	4	0	0	0	0	0	5
11:15 AM	0	1	0	0	1	0	0	0	0	0	0	2	0	0	2	0	0	0	0	0	3
11:30 AM	0	0	0	0	0	0	0	0	0	0	0	2	0	0	2	0	0	0	0	0	2
11:45 AM	0	0	0	0	0	0	0	0	0	0	0	3	0	0	3	0	0	0	0	0	3
Total	0	2	0	0	2	0	0	0	0	0	0	11	0	0	11	0	0	0	0	0	13
12:00 PM	0	1	0	0	1	0	0	0	0	0	0	2	0	0	2	0	0	0	0	0	3
12:15 PM	0	2	0	0	2	0	0	0	0	0	0	2	0	0	2	0	0	0	0	0	4
12:30 PM	0	1	0	0	1	0	0	0	0	0	0	2	0	0	2	0	0	0	0	0	3
12:45 PM	0	4	0	0	4	0	0	0	0	0	0	3	0	0	3	0	0	0	0	0	7
Total	0	8	0	0	8	0	0	0	0	0	0	9	0	0	9	0	0	0	0	0	17
01:00 PM	0	0	0	0	0	0	0	0	0	0	0	2	0	0	2	0	0	0	0	0	2
01:15 PM	0	0	0	0	0	0	0	0	0	0	0	1	0	0	1	0	0	0	0	0	1
01:30 PM	0	2	0	0	2	0	0	0	0	0	0	2	0	0	2	0	0	0	0	0	4
01:45 PM	0	0	0	0	0	0	0	0	0	0	0	0	0	0	0	0	0	0	0	0	0
Total	0	2	0	0	2	0	0	0	0	0	0	5	0	0	5	0	0	0	0	0	7
02:00 PM	0	2	0	0	2	0	0	0	0	0	0	1	0	0	1	0	0	0	0	0	3
02:15 PM	0	1	0	0	1	0	0	0	0	0	0	0	0	0	0	0	0	0	0	0	1
02:30 PM	0	4	0	0	4	0	0	0	0	0	0	3	0	0	3	0	0	0	0	0	7
02:45 PM	0	1	0	0	1	0	0	0	0	0	0	2	0	0	2	0	0	0	0	0	3
Total	0	8	0	0	8	0	0	0	0	0	0	6	0	0	6	0	0	0	0	0	14
03:00 PM	0	1	0	0	1	0	0	0	0	0	0	1	0	0	1	0	0	0	0	0	2
03:15 PM	0	2	0	0	2	0	0	0	0	0	0	3	0	0	3	0	0	0	0	0	5
03:30 PM	0	2	0	0	2	0	0	0	0	0	0	3	0	0	3	0	0	0	0	0	5

DocuSign Envelope ID: 5C03745C-4B01-4834-A65D-B77F558A4F46

Quality Counts

920 Blairhill Rd, Ste B-106
Charlotte, NC 28217

File Name : 15411708 - Brevard Rd -- Bent Creek Ranch Rd
Site Code : 15411708
Start Date : 4/20/2021

Groups Printed- Classes 8, 9, 10

	Brevard Rd Southbound					Bent Creek Ranch Rd Westbound					Brevard Rd Northbound					Bent Creek Ranch Rd Eastbound					
Start Time	Left	Thru	Right	U-Turn	App. Total	Left	Thru	Right	U-Turn	App. Total	Left	Thru	Right	U-Turn	App. Total	Left	Thru	Right	U-Turn	App. Total	Int. Total
03:45 PM	0	0	0	0	0	0	0	0	0	0	0	1	0	0	1	0	0	0	0	0	1
Total	0	5	0	0	5	0	0	0	0	0	0	8	0	0	8	0	0	0	0	0	13
04:00 PM	0	1	0	0	1	0	0	0	0	0	0	1	0	0	1	0	0	0	0	0	2
04:15 PM	0	1	0	0	1	0	0	0	0	0	0	3	0	0	3	0	0	0	0	0	4
04:30 PM	0	1	0	0	1	0	0	0	0	0	0	0	0	0	0	0	0	0	0	0	1
04:45 PM	0	0	0	0	0	0	0	0	0	0	0	3	0	0	3	0	0	0	0	0	3
Total	0	3	0	0	3	0	0	0	0	0	0	7	0	0	7	0	0	0	0	0	10
05:00 PM	0	1	0	0	1	0	0	0	0	0	0	0	0	0	0	0	0	0	0	0	1
05:15 PM	0	2	0	0	2	0	0	0	0	0	0	1	0	0	1	0	0	0	0	0	3
05:30 PM	0	0	0	0	0	0	0	0	0	0	0	2	0	0	2	0	0	0	0	0	2
05:45 PM	0	2	0	0	2	0	0	0	0	0	0	1	0	0	1	0	0	0	0	0	3
Total	0	5	0	0	5	0	0	0	0	0	0	4	0	0	4	0	0	0	0	0	9
06:00 PM	0	0	0	0	0	0	0	0	0	0	0	1	0	0	1	0	0	0	0	0	1
06:15 PM	0	0	0	0	0	0	0	0	0	0	0	1	0	0	1	0	0	0	0	0	1
06:30 PM	0	0	0	0	0	0	0	0	0	0	0	0	0	0	0	0	0	0	0	0	0
06:45 PM	0	1	0	0	1	0	0	0	0	0	0	0	0	0	0	0	0	0	0	0	1
Total	0	1	0	0	1	0	0	0	0	0	0	2	0	0	2	0	0	0	0	0	3
Grand Total	0	65	0	0	65	0	0	0	0	0	0	79	0	0	79	0	0	0	0	0	144
Apprch %	0	100	0	0		0	0	0	0		0	100	0	0		0	0	0	0		
Total %	0	45.1	0	0	45.1	0	0	0	0	0	0	54.9	0	0	54.9	0	0	0	0	0	

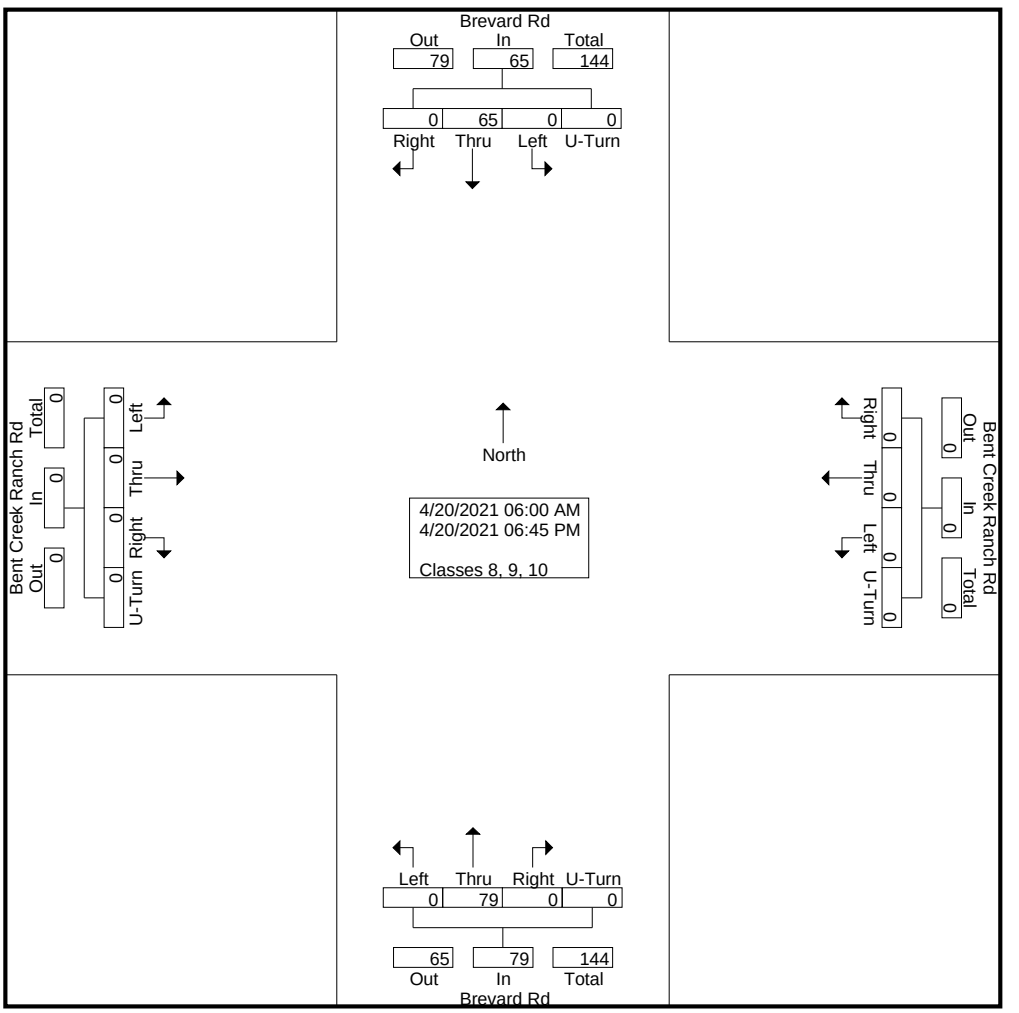

DocuSign Envelope ID: 5C03745C-4B01-4834-A65D-B77F558A4F46

Quality Counts

920 Blairhill Rd, Ste B-106
Charlotte, NC 28217

File Name : 15411708 - Brevard Rd -- Bent Creek Ranch Rd
Site Code : 15411708
Start Date : 4/20/2021
Page No : 3

	Brevard Rd Southbound					Bent Creek Ranch Rd Westbound					Brevard Rd Northbound					Bent Creek Ranch Rd Eastbound					
Start Time	Left	Thru	Right	U-Turn	App. Total	Left	Thru	Right	U-Turn	App. Total	Left	Thru	Right	U-Turn	App. Total	Left	Thru	Right	U-Turn	App. Total	Int. Total
Peak Hour Analysis From 06:00 AM to 11:45 AM - Peak 1 of 1																					
Peak Hour for Entire Intersection Begins at 09:15 AM																					
09:15 AM	0	**4**	0	0	**4**	0	0	0	0	0	0	2	0	0	2	0	0	0	0	0	6
09:30 AM	0	1	0	0	1	0	0	0	0	0	0	3	0	0	3	0	0	0	0	0	4
09:45 AM	0	1	0	0	1	0	0	0	0	0	0	2	0	0	2	0	0	0	0	0	3
10:00 AM	0	4	0	0	4	0	0	0	0	0	0	**4**	0	0	**4**	0	0	0	0	0	**8**
Total Volume	0	10	0	0	10	0	0	0	0	0	0	11	0	0	11	0	0	0	0	0	21
% App. Total	0	100	0	0		0	0	0	0		0	100	0	0		0	0	0	0		
PHF	.000	.625	.000	.000	.625	.000	.000	.000	.000	.000	.000	.688	.000	.000	.688	.000	.000	.000	.000	.000	.656

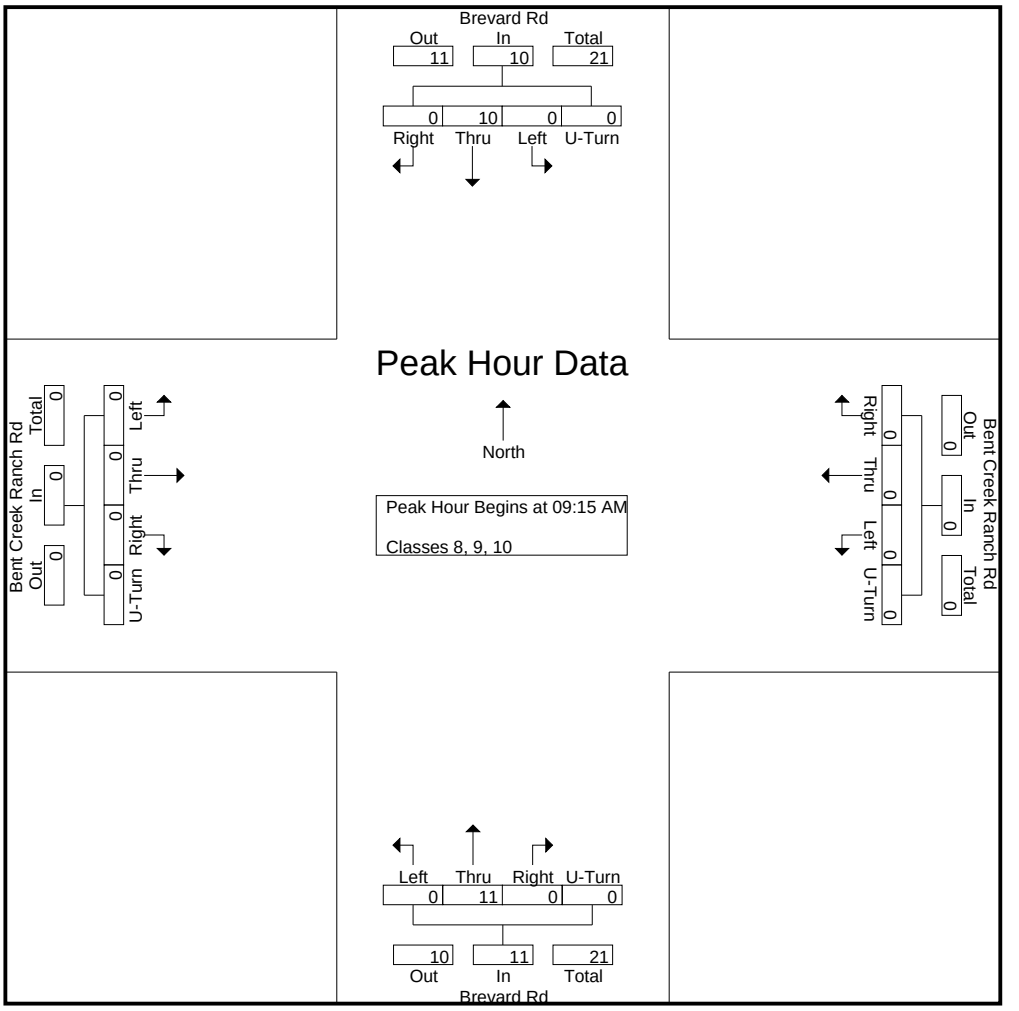

DocuSign Envelope ID: 5C03745C-4B01-4834-A65D-B77F558A4F46

Quality Counts

920 Blairhill Rd, Ste B-106
Charlotte, NC 28217

File Name : 15411708 - Brevard Rd -- Bent Creek Ranch Rd
Site Code : 15411708
Start Date : 4/20/2021
Page No : 4

	Brevard Rd Southbound					Bent Creek Ranch Rd Westbound					Brevard Rd Northbound					Bent Creek Ranch Rd Eastbound					
Start Time	Left	Thru	Right	U-Turn	App. Total	Left	Thru	Right	U-Turn	App. Total	Left	Thru	Right	U-Turn	App. Total	Left	Thru	Right	U-Turn	App. Total	Int. Total
Peak Hour Analysis From 12:00 PM to 06:45 PM - Peak 1 of 1																					
Peak Hour for Entire Intersection Begins at 12:00 PM																					
12:00 PM	0	1	0	0	1	0	0	0	0	0	0	2	0	0	2	0	0	0	0	0	3
12:15 PM	0	2	0	0	2	0	0	0	0	0	0	2	0	0	2	0	0	0	0	0	4
12:30 PM	0	1	0	0	1	0	0	0	0	0	0	2	0	0	2	0	0	0	0	0	3
12:45 PM	0	**4**	0	0	**4**	0	0	0	0	0	0	**3**	0	0	**3**	0	0	0	0	0	**7**
Total Volume	0	8	0	0	8	0	0	0	0	0	0	9	0	0	9	0	0	0	0	0	17
% App. Total	0	100	0	0		0	0	0	0		0	100	0	0		0	0	0	0		
PHF	.000	.500	.000	.000	.500	.000	.000	.000	.000	.000	.000	.750	.000	.000	.750	.000	.000	.000	.000	.000	.607

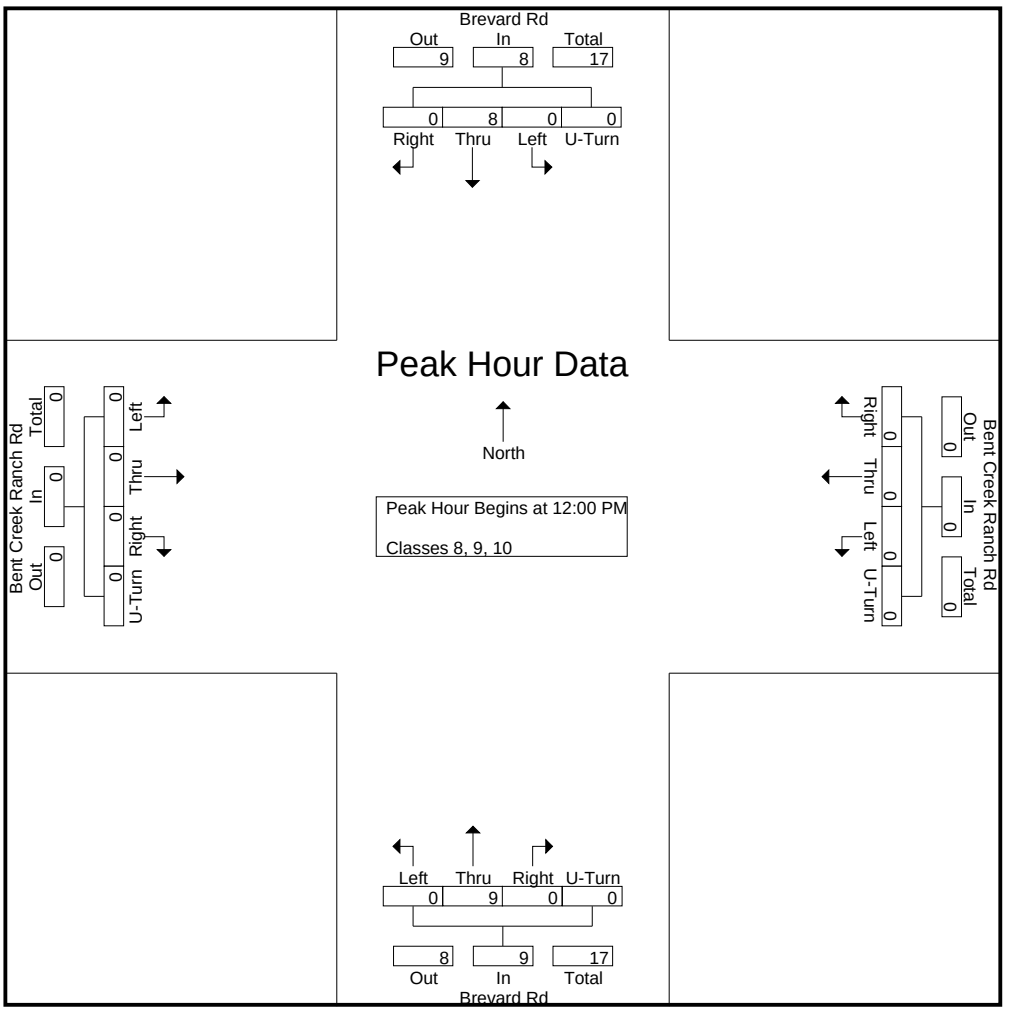

DocuSign Envelope ID: 5C03745C-4B01-4834-A65D-B77F558A4F46

Quality Counts

920 Blairhill Rd, Ste B-106
Charlotte, NC 28217

File Name : 15411708 - Brevard Rd -- Bent Creek Ranch Rd
Site Code : 15411708
Start Date : 4/20/2021
Page No : 1

Groups Printed- Classes 11, 12, 13

	Brevard Rd Southbound					Bent Creek Ranch Rd Westbound					Brevard Rd Northbound					Bent Creek Ranch Rd Eastbound					
Start Time	Left	Thru	Right	U-Turn	App. Total	Left	Thru	Right	U-Turn	App. Total	Left	Thru	Right	U-Turn	App. Total	Left	Thru	Right	U-Turn	App. Total	Int. Total
06:00 AM	0	0	0	0	0	0	0	0	0	0	0	0	0	0	0	0	0	0	0	0	0
06:15 AM	0	0	0	0	0	0	0	0	0	0	0	0	0	0	0	0	0	0	0	0	0
06:30 AM	0	0	0	0	0	0	0	0	0	0	0	0	0	0	0	0	0	0	0	0	0
06:45 AM	0	0	0	0	0	0	0	0	0	0	0	0	0	0	0	0	0	0	0	0	0
Total	0	0	0	0	0	0	0	0	0	0	0	0	0	0	0	0	0	0	0	0	0
07:00 AM	0	0	0	0	0	0	0	0	0	0	0	0	0	0	0	0	0	0	0	0	0
07:15 AM	0	0	0	0	0	0	0	0	0	0	0	0	0	0	0	0	0	0	0	0	0
07:30 AM	0	0	0	0	0	0	0	0	0	0	0	0	0	0	0	0	0	0	0	0	0
07:45 AM	0	0	0	0	0	0	0	0	0	0	0	0	0	0	0	0	0	0	0	0	0
Total	0	0	0	0	0	0	0	0	0	0	0	0	0	0	0	0	0	0	0	0	0
08:00 AM	0	0	0	0	0	0	0	0	0	0	0	0	0	0	0	0	0	0	0	0	0
08:15 AM	0	0	0	0	0	0	0	0	0	0	0	0	0	0	0	0	0	0	0	0	0
08:30 AM	0	0	0	0	0	0	0	0	0	0	0	0	0	0	0	0	0	0	0	0	0
08:45 AM	0	0	0	0	0	0	0	0	0	0	0	0	0	0	0	0	0	0	0	0	0
Total	0	0	0	0	0	0	0	0	0	0	0	0	0	0	0	0	0	0	0	0	0
09:00 AM	0	0	0	0	0	0	0	0	0	0	0	0	0	0	0	0	0	0	0	0	0
09:15 AM	0	0	0	0	0	0	0	0	0	0	0	0	0	0	0	0	0	0	0	0	0
09:30 AM	0	0	0	0	0	0	0	0	0	0	0	0	0	0	0	0	0	0	0	0	0
09:45 AM	0	0	0	0	0	0	0	0	0	0	0	0	0	0	0	0	0	0	0	0	0
Total	0	0	0	0	0	0	0	0	0	0	0	0	0	0	0	0	0	0	0	0	0
10:00 AM	0	0	0	0	0	0	0	0	0	0	0	0	0	0	0	0	0	0	0	0	0
10:15 AM	0	0	0	0	0	0	0	0	0	0	0	0	0	0	0	0	0	0	0	0	0
10:30 AM	0	0	0	0	0	0	0	0	0	0	0	0	0	0	0	0	0	0	0	0	0
10:45 AM	0	0	0	0	0	0	0	0	0	0	0	0	0	0	0	0	0	0	0	0	0
Total	0	0	0	0	0	0	0	0	0	0	0	0	0	0	0	0	0	0	0	0	0
11:00 AM	0	0	0	0	0	0	0	0	0	0	0	0	0	0	0	0	0	0	0	0	0
11:15 AM	0	0	0	0	0	0	0	0	0	0	0	0	0	0	0	0	0	0	0	0	0
11:30 AM	0	0	0	0	0	0	0	0	0	0	0	0	0	0	0	0	0	0	0	0	0
11:45 AM	0	0	0	0	0	0	0	0	0	0	0	0	0	0	0	0	0	0	0	0	0
Total	0	0	0	0	0	0	0	0	0	0	0	0	0	0	0	0	0	0	0	0	0
12:00 PM	0	0	0	0	0	0	0	0	0	0	0	0	0	0	0	0	0	0	0	0	0
12:15 PM	0	0	0	0	0	0	0	0	0	0	0	0	0	0	0	0	0	0	0	0	0
12:30 PM	0	0	0	0	0	0	0	0	0	0	0	0	0	0	0	0	0	0	0	0	0
12:45 PM	0	0	0	0	0	0	0	0	0	0	0	0	0	0	0	0	0	0	0	0	0
Total	0	0	0	0	0	0	0	0	0	0	0	0	0	0	0	0	0	0	0	0	0
01:00 PM	0	0	0	0	0	0	0	0	0	0	0	0	0	0	0	0	0	0	0	0	0
01:15 PM	0	0	0	0	0	0	0	0	0	0	0	0	0	0	0	0	0	0	0	0	0
01:30 PM	0	0	0	0	0	0	0	0	0	0	0	0	0	0	0	0	0	0	0	0	0
01:45 PM	0	0	0	0	0	0	0	0	0	0	0	0	0	0	0	0	0	0	0	0	0
Total	0	0	0	0	0	0	0	0	0	0	0	0	0	0	0	0	0	0	0	0	0
02:00 PM	0	0	0	0	0	0	0	0	0	0	0	0	0	0	0	0	0	0	0	0	0
02:15 PM	0	0	0	0	0	0	0	0	0	0	0	0	0	0	0	0	0	0	0	0	0
02:30 PM	0	0	0	0	0	0	0	0	0	0	0	0	0	0	0	0	0	0	0	0	0
02:45 PM	0	0	0	0	0	0	0	0	0	0	0	0	0	0	0	0	0	0	0	0	0
Total	0	0	0	0	0	0	0	0	0	0	0	0	0	0	0	0	0	0	0	0	0
03:00 PM	0	0	0	0	0	0	0	0	0	0	0	0	0	0	0	0	0	0	0	0	0
03:15 PM	0	0	0	0	0	0	0	0	0	0	0	0	0	0	0	0	0	0	0	0	0
03:30 PM	0	0	0	0	0	0	0	0	0	0	0	0	0	0	0	0	0	0	0	0	0

DocuSign Envelope ID: 5C03745C-4B01-4834-A65D-B77F558A4F46

Quality Counts

920 Blairhill Rd, Ste B-106
Charlotte, NC 28217

File Name : 15411708 - Brevard Rd -- Bent Creek Ranch Rd
Site Code : 15411708
Start Date : 4/20/2021

Groups Printed- Classes 11, 12, 13

	Brevard Rd Southbound					Bent Creek Ranch Rd Westbound					Brevard Rd Northbound					Bent Creek Ranch Rd Eastbound					
Start Time	Left	Thru	Right	U-Turn	App. Total	Left	Thru	Right	U-Turn	App. Total	Left	Thru	Right	U-Turn	App. Total	Left	Thru	Right	U-Turn	App. Total	Int. Total
03:45 PM	0	0	0	0	0	0	0	0	0	0	0	0	0	0	0	0	0	0	0	0	0
Total	0	0	0	0	0	0	0	0	0	0	0	0	0	0	0	0	0	0	0	0	0
04:00 PM	0	0	0	0	0	0	0	0	0	0	0	0	0	0	0	0	0	0	0	0	0
04:15 PM	0	0	0	0	0	0	0	0	0	0	0	0	0	0	0	0	0	0	0	0	0
04:30 PM	0	0	0	0	0	0	0	0	0	0	0	0	0	0	0	0	0	0	0	0	0
04:45 PM	0	0	0	0	0	0	0	0	0	0	0	0	0	0	0	0	0	0	0	0	0
Total	0	0	0	0	0	0	0	0	0	0	0	0	0	0	0	0	0	0	0	0	0
05:00 PM	0	0	0	0	0	0	0	0	0	0	0	0	0	0	0	0	0	0	0	0	0
05:15 PM	0	0	0	0	0	0	0	0	0	0	0	0	0	0	0	0	0	0	0	0	0
05:30 PM	0	0	0	0	0	0	0	0	0	0	0	0	0	0	0	0	0	0	0	0	0
05:45 PM	0	0	0	0	0	0	0	0	0	0	0	0	0	0	0	0	0	0	0	0	0
Total	0	0	0	0	0	0	0	0	0	0	0	0	0	0	0	0	0	0	0	0	0
06:00 PM	0	0	0	0	0	0	0	0	0	0	0	0	0	0	0	0	0	0	0	0	0
06:15 PM	0	0	0	0	0	0	0	0	0	0	0	0	0	0	0	0	0	0	0	0	0
06:30 PM	0	0	0	0	0	0	0	0	0	0	0	0	0	0	0	0	0	0	0	0	0
06:45 PM	0	0	0	0	0	0	0	0	0	0	0	0	0	0	0	0	0	0	0	0	0
Total	0	0	0	0	0	0	0	0	0	0	0	0	0	0	0	0	0	0	0	0	0
Grand Total	0	0	0	0	0	0	0	0	0	0	0	0	0	0	0	0	0	0	0	0	0
Apprch %	0	0	0	0		0	0	0	0		0	0	0	0		0	0	0	0		
Total %																					

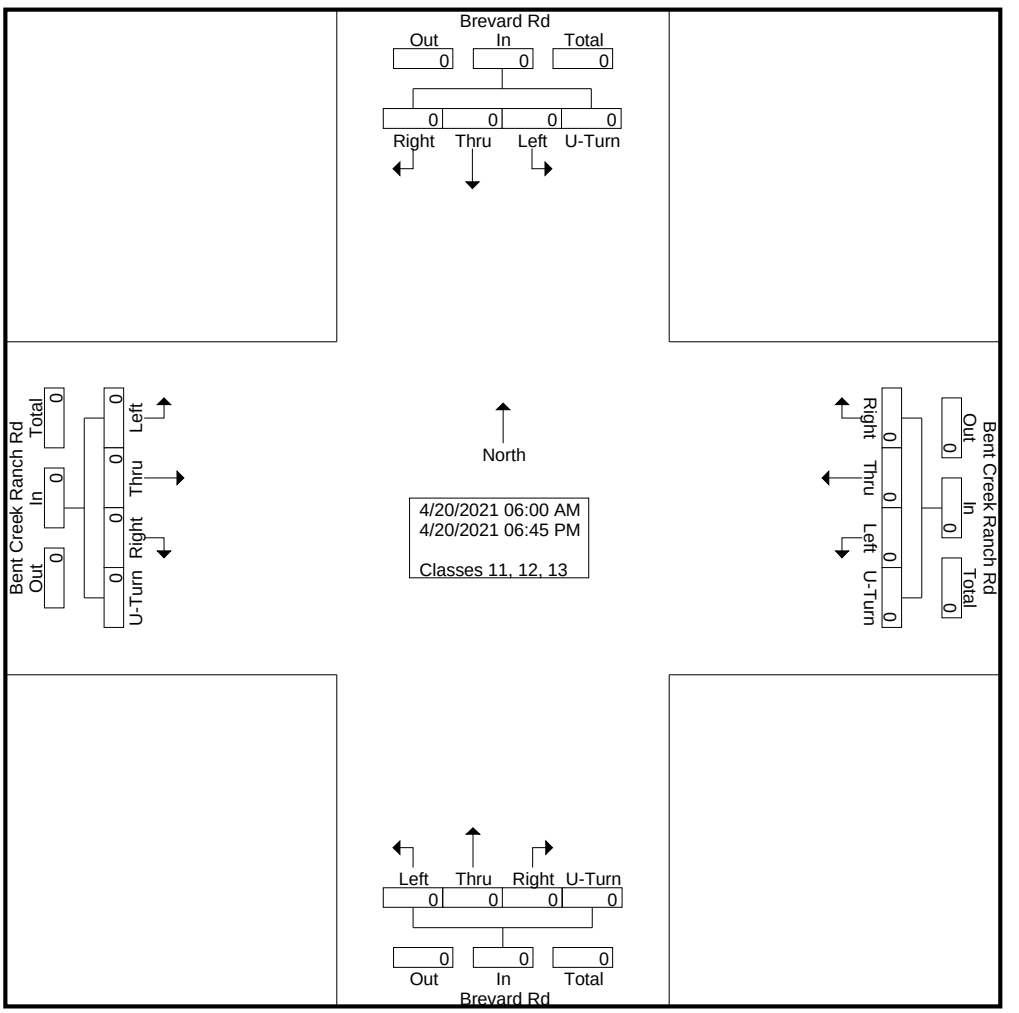

DocuSign Envelope ID: 5C03745C-4B01-4834-A65D-B77F558A4F46

Quality Counts

920 Blairhill Rd, Ste B-106
Charlotte, NC 28217

File Name : 15411708 - Brevard Rd -- Bent Creek Ranch Rd
Site Code : 15411708
Start Date : 4/20/2021
Page No : 3

	Brevard Rd Southbound					Bent Creek Ranch Rd Westbound					Brevard Rd Northbound					Bent Creek Ranch Rd Eastbound					
Start Time	Left	Thru	Right	U-Turn	App. Total	Left	Thru	Right	U-Turn	App. Total	Left	Thru	Right	U-Turn	App. Total	Left	Thru	Right	U-Turn	App. Total	Int. Total
Peak Hour Analysis From 06:00 AM to 11:45 AM - Peak 1 of 1																					
Peak Hour for Entire Intersection Begins at 06:00 AM																					
06:00 AM	0	0	0	0	0	0	0	0	0	0	0	0	0	0	0	0	0	0	0	0	0
06:15 AM	0	0	0	0	0	0	0	0	0	0	0	0	0	0	0	0	0	0	0	0	0
06:30 AM	0	0	0	0	0	0	0	0	0	0	0	0	0	0	0	0	0	0	0	0	0
06:45 AM	0	0	0	0	0	0	0	0	0	0	0	0	0	0	0	0	0	0	0	0	0
Total Volume	0	0	0	0	0	0	0	0	0	0	0	0	0	0	0	0	0	0	0	0	0
% App. Total	0	0	0	0		0	0	0	0		0	0	0	0		0	0	0	0		
PHF	.000	.000	.000	.000	.000	.000	.000	.000	.000	.000	.000	.000	.000	.000	.000	.000	.000	.000	.000	.000	.000

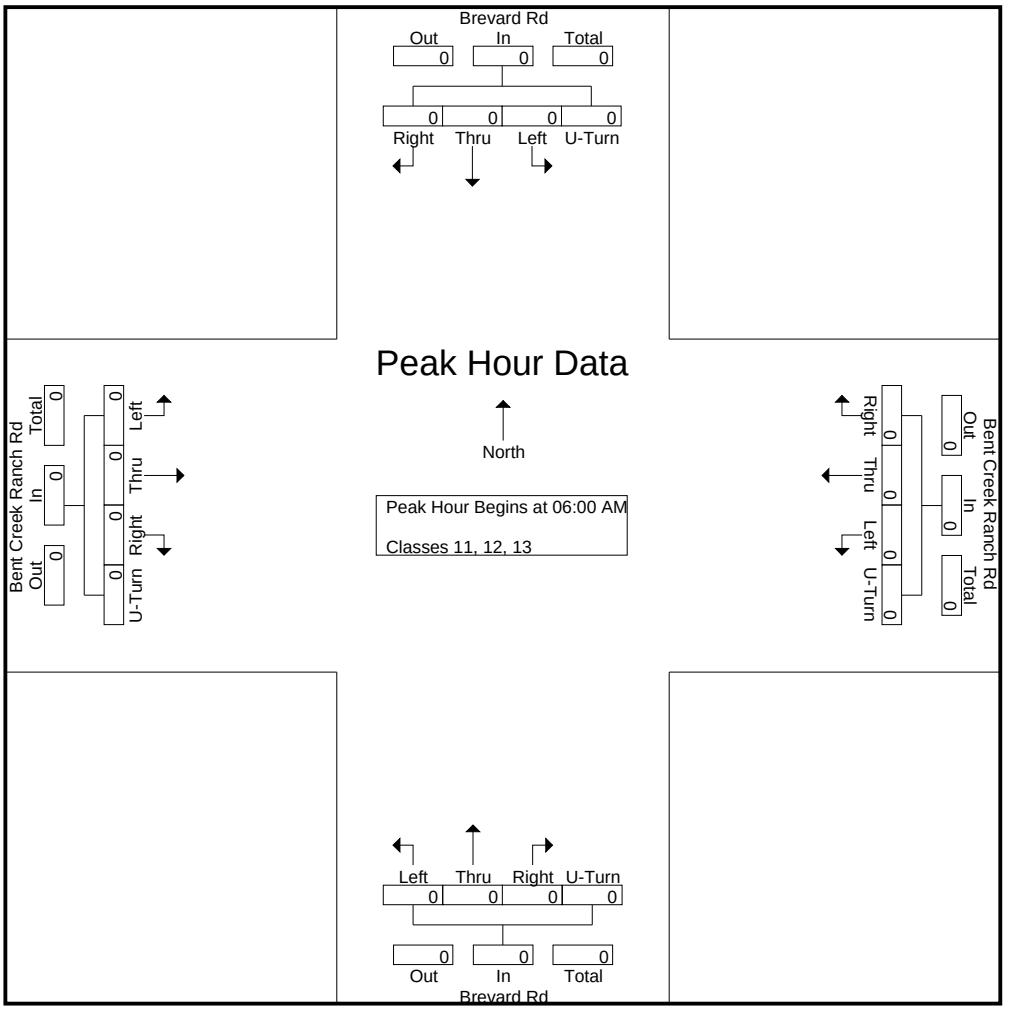

DocuSign Envelope ID: 5C03745C-4B01-4834-A65D-B77F558A4F46

Quality Counts

920 Blairhill Rd, Ste B-106
Charlotte, NC 28217

File Name : 15411708 - Brevard Rd -- Bent Creek Ranch Rd
Site Code : 15411708
Start Date : 4/20/2021

	Brevard Rd Southbound					Bent Creek Ranch Rd Westbound					Brevard Rd Northbound					Bent Creek Ranch Rd Eastbound					
Start Time	Left	Thru	Right	U-Turn	App. Total	Left	Thru	Right	U-Turn	App. Total	Left	Thru	Right	U-Turn	App. Total	Left	Thru	Right	U-Turn	App. Total	Int. Total
Peak Hour Analysis From 12:00 PM to 06:45 PM - Peak 1 of 1																					
Peak Hour for Entire Intersection Begins at 12:00 PM																					
12:00 PM	0	0	0	0	0	0	0	0	0	0	0	0	0	0	0	0	0	0	0	0	0
12:15 PM	0	0	0	0	0	0	0	0	0	0	0	0	0	0	0	0	0	0	0	0	0
12:30 PM	0	0	0	0	0	0	0	0	0	0	0	0	0	0	0	0	0	0	0	0	0
12:45 PM	0	0	0	0	0	0	0	0	0	0	0	0	0	0	0	0	0	0	0	0	0
Total Volume	0	0	0	0	0	0	0	0	0	0	0	0	0	0	0	0	0	0	0	0	0
% App. Total	0	0	0	0		0	0	0	0		0	0	0	0		0	0	0	0		
PHF	.000	.000	.000	.000	.000	.000	.000	.000	.000	.000	.000	.000	.000	.000	.000	.000	.000	.000	.000	.000	.000

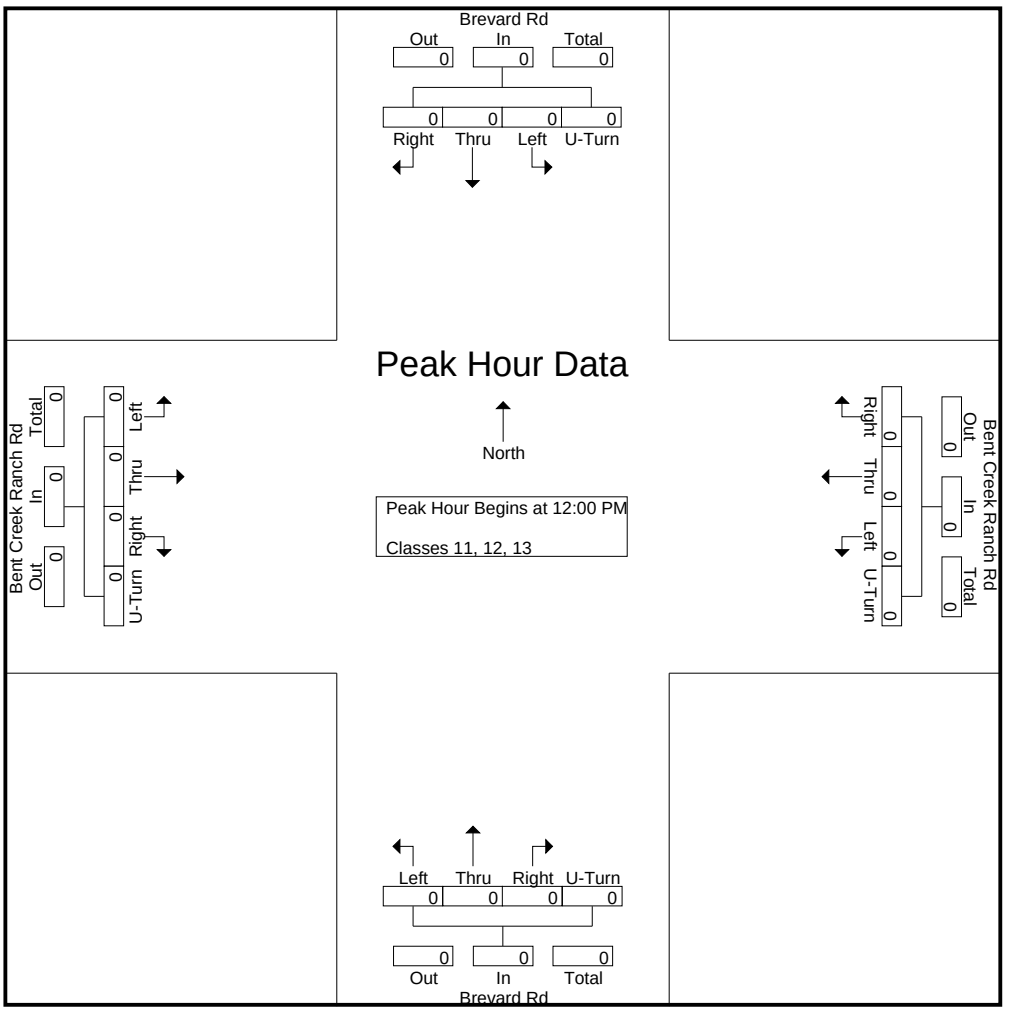

DocuSign Envelope ID: 5C03745C-4B01-4834-A65D-B77F558A4F46

Quality Counts

920 Blairhill Rd, Ste B-106
Charlotte, NC 28217

File Name : 15411708 - Brevard Rd -- Bent Creek Ranch Rd
Site Code : 15411708
Start Date : 4/20/2021
Page No : 1

Groups Printed- Bikes, Peds

	Brevard Rd Southbound					Bent Creek Ranch Rd Westbound					Brevard Rd Northbound					Bent Creek Ranch Rd Eastbound					
Start Time	Left	Thru	Right	Peds	App. Total	Left	Thru	Right	Peds	App. Total	Left	Thru	Right	Peds	App. Total	Left	Thru	Right	Peds	App. Total	Int. Total
06:00 AM	0	0	0	0	0	0	0	0	0	0	0	0	0	0	0	0	0	0	0	0	0
06:15 AM	0	0	0	0	0	0	0	0	0	0	0	0	0	0	0	0	0	0	0	0	0
06:30 AM	0	0	0	0	0	0	0	0	0	0	0	0	0	0	0	0	0	0	0	0	0
06:45 AM	0	0	0	0	0	0	0	0	0	0	0	0	0	0	0	0	0	0	0	0	0
Total	0	0	0	0	0	0	0	0	0	0	0	0	0	0	0	0	0	0	0	0	0
07:00 AM	0	0	0	0	0	0	0	0	0	0	0	0	0	0	0	0	0	0	0	0	0
07:15 AM	0	0	0	0	0	0	0	0	0	0	0	0	0	0	0	0	0	0	0	0	0
07:30 AM	0	0	0	0	0	0	0	0	0	0	0	0	0	0	0	0	0	0	0	0	0
07:45 AM	0	0	0	0	0	0	0	0	0	0	0	0	0	0	0	0	0	0	0	0	0
Total	0	0	0	0	0	0	0	0	0	0	0	0	0	0	0	0	0	0	0	0	0
08:00 AM	0	0	0	0	0	0	0	0	0	0	0	0	0	0	0	0	0	0	0	0	0
08:15 AM	0	0	0	0	0	0	0	0	0	0	0	0	0	0	0	0	0	0	0	0	0
08:30 AM	0	0	0	0	0	0	0	0	0	0	0	0	0	0	0	0	0	0	0	0	0
08:45 AM	0	0	0	0	0	0	0	0	0	0	0	0	0	0	0	0	0	0	0	0	0
Total	0	0	0	0	0	0	0	0	0	0	0	0	0	0	0	0	0	0	0	0	0
09:00 AM	0	0	0	0	0	0	0	0	0	0	0	0	0	0	0	0	0	0	0	0	0
09:15 AM	0	0	0	0	0	0	0	0	0	0	0	0	0	0	0	0	0	0	0	0	0
09:30 AM	0	0	0	0	0	0	0	0	0	0	0	0	0	0	0	0	0	0	0	0	0
09:45 AM	0	0	0	0	0	0	0	0	0	0	0	0	0	0	0	0	0	0	0	0	0
Total	0	0	0	0	0	0	0	0	0	0	0	0	0	0	0	0	0	0	0	0	0
10:00 AM	0	0	0	0	0	0	0	0	0	0	0	0	0	0	0	0	0	0	0	0	0
10:15 AM	0	0	0	0	0	0	0	0	0	0	0	0	0	0	0	0	0	0	0	0	0
10:30 AM	0	0	0	0	0	0	0	0	0	0	0	0	0	0	0	0	0	0	0	0	0
10:45 AM	0	0	1	0	1	0	0	0	0	0	0	0	0	0	0	0	0	0	0	0	1
Total	0	0	1	0	1	0	0	0	0	0	0	0	0	0	0	0	0	0	0	0	1
11:00 AM	0	0	0	0	0	0	0	0	0	0	0	0	0	0	0	0	0	0	0	0	0
11:15 AM	0	0	0	0	0	0	0	0	0	0	0	0	0	0	0	0	0	0	0	0	0
11:30 AM	0	0	0	0	0	0	0	0	0	0	0	0	0	0	0	0	0	0	0	0	0
11:45 AM	0	0	0	0	0	0	0	0	0	0	0	0	0	0	0	0	0	0	0	0	0
Total	0	0	0	0	0	0	0	0	0	0	0	0	0	0	0	0	0	0	0	0	0
12:00 PM	0	0	0	0	0	0	0	0	0	0	0	0	0	0	0	0	0	0	0	0	0
12:15 PM	0	0	0	0	0	0	0	0	0	0	0	0	0	0	0	0	0	0	0	0	0
12:30 PM	0	0	0	0	0	0	0	0	0	0	0	1	0	0	1	0	0	0	0	0	1
12:45 PM	0	0	0	0	0	0	0	0	0	0	0	0	0	0	0	0	0	0	0	0	0
Total	0	0	0	0	0	0	0	0	0	0	0	1	0	0	1	0	0	0	0	0	1
01:00 PM	0	0	0	0	0	0	0	0	0	0	0	0	0	0	0	0	0	0	0	0	0
01:15 PM	0	0	0	0	0	0	0	0	0	0	0	0	0	0	0	0	0	0	0	0	0
01:30 PM	0	0	0	0	0	0	0	0	0	0	0	0	0	0	0	0	0	0	0	0	0
01:45 PM	0	0	0	0	0	0	0	0	0	0	0	1	0	0	1	0	0	0	0	0	1
Total	0	0	0	0	0	0	0	0	0	0	0	1	0	0	1	0	0	0	0	0	1
02:00 PM	0	0	0	0	0	0	0	0	0	0	0	0	0	0	0	0	0	0	0	0	0
02:15 PM	0	0	0	0	0	0	0	0	0	0	0	0	0	0	0	0	0	0	0	0	0
02:30 PM	0	0	0	0	0	0	0	0	0	0	0	0	0	0	0	0	0	0	0	0	0
02:45 PM	0	0	0	0	0	0	0	0	0	0	0	0	0	0	0	0	0	0	0	0	0
Total	0	0	0	0	0	0	0	0	0	0	0	0	0	0	0	0	0	0	0	0	0
03:00 PM	0	1	0	0	1	0	0	0	0	0	0	0	0	0	0	0	0	0	0	0	1
03:15 PM	0	0	0	0	0	0	0	0	0	0	0	0	0	0	0	0	0	0	0	0	0
03:30 PM	0	0	0	0	0	0	0	0	0	0	0	0	0	0	0	0	0	0	0	0	0

DocuSign Envelope ID: 5C03745C-4B01-4834-A65D-B77F558A4F46

Quality Counts

920 Blairhill Rd, Ste B-106
Charlotte, NC 28217

File Name : 15411708 - Brevard Rd -- Bent Creek Ranch Rd
Site Code : 15411708
Start Date : 4/20/2021

Groups Printed- Bikes, Peds

	Brevard Rd Southbound					Bent Creek Ranch Rd Westbound					Brevard Rd Northbound					Bent Creek Ranch Rd Eastbound					
Start Time	Left	Thru	Right	Peds	App. Total	Left	Thru	Right	Peds	App. Total	Left	Thru	Right	Peds	App. Total	Left	Thru	Right	Peds	App. Total	Int. Total
03:45 PM	0	0	0	0	0	0	0	0	0	0	1	0	0	0	1	0	0	0	0	0	1
Total	0	1	0	0	1	0	0	0	0	0	1	0	0	0	1	0	0	0	0	0	2
04:00 PM	0	0	0	0	0	0	0	0	0	0	0	1	0	0	1	0	0	0	0	0	1
04:15 PM	0	0	0	0	0	0	0	0	0	0	0	0	0	0	0	0	0	0	0	0	0
04:30 PM	0	0	0	0	0	0	0	0	0	0	0	2	0	0	2	0	0	0	0	0	2
04:45 PM	0	0	0	0	0	0	0	0	0	0	0	0	0	0	0	0	0	0	0	0	0
Total	0	0	0	0	0	0	0	0	0	0	0	3	0	0	3	0	0	0	0	0	3
05:00 PM	0	0	0	0	0	0	0	0	0	0	0	0	0	0	0	0	0	0	0	0	0
05:15 PM	0	0	0	0	0	0	0	0	0	0	0	0	0	0	0	0	0	0	0	0	0
05:30 PM	0	0	0	0	0	0	0	0	0	0	0	0	0	0	0	0	0	0	0	0	0
05:45 PM	0	0	0	0	0	0	0	0	0	0	0	0	0	0	0	0	0	1	0	1	1
Total	0	0	0	0	0	0	0	0	0	0	0	0	0	0	0	0	0	1	0	1	1
06:00 PM	0	0	0	0	0	0	0	0	0	0	0	0	0	0	0	0	0	0	0	0	0
06:15 PM	0	1	0	0	1	0	0	0	0	0	0	0	0	0	0	0	0	0	0	0	1
06:30 PM	0	0	0	0	0	0	0	0	0	0	0	0	0	0	0	0	0	0	0	0	0
06:45 PM	0	0	0	0	0	0	0	0	0	0	0	0	0	0	0	0	0	0	0	0	0
Total	0	1	0	0	1	0	0	0	0	0	0	0	0	0	0	0	0	0	0	0	1
Grand Total	0	2	1	0	3	0	0	0	0	0	1	5	0	0	6	0	0	1	0	1	10
Apprch %	0	66.7	33.3	0		0	0	0	0		16.7	83.3	0	0		0	0	100	0		
Total %	0	20	10	0	30	0	0	0	0	0	10	50	0	0	60	0	0	10	0	10	

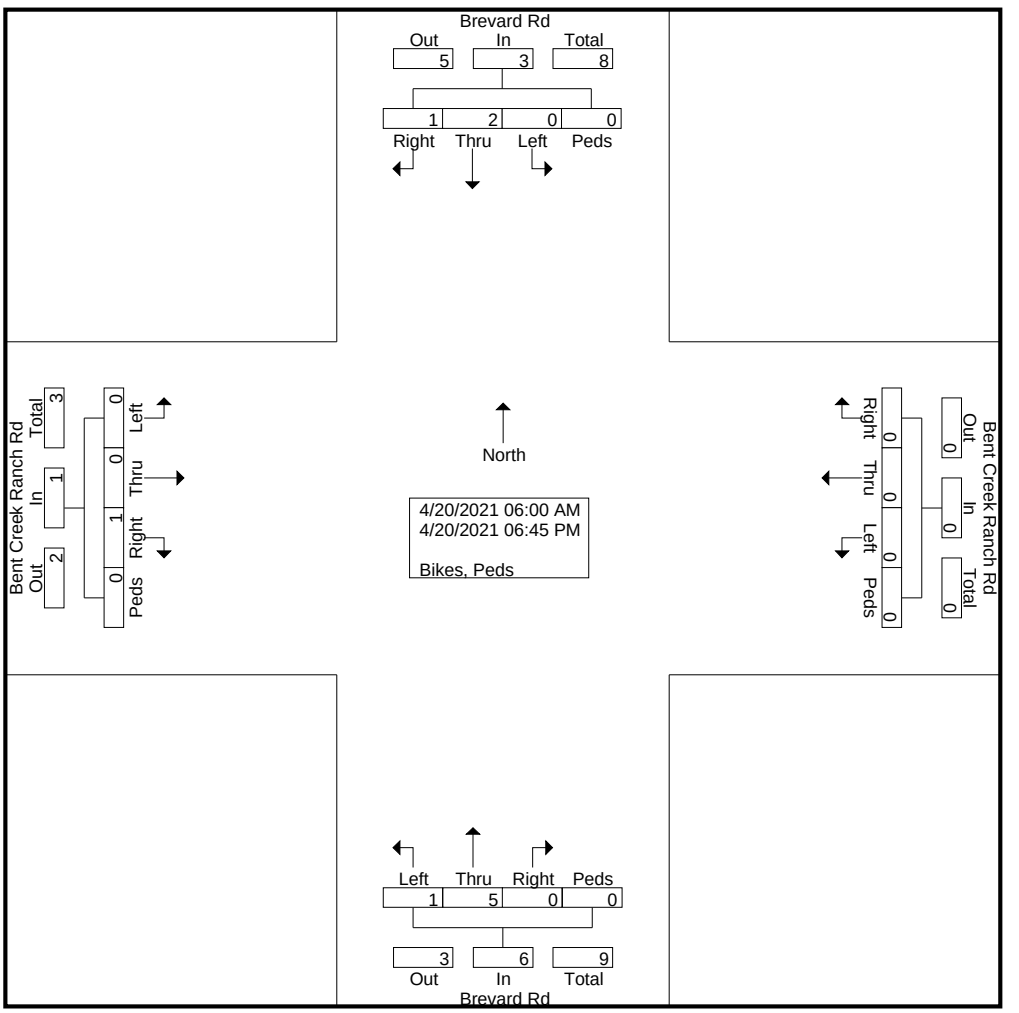

DocuSign Envelope ID: 5C03745C-4B01-4834-A65D-B77F558A4F46

Quality Counts

920 Blairhill Rd, Ste B-106
Charlotte, NC 28217

File Name : 15411708 - Brevard Rd -- Bent Creek Ranch Rd
Site Code : 15411708
Start Date : 4/20/2021
Page No : 3

	Brevard Rd Southbound					Bent Creek Ranch Rd Westbound					Brevard Rd Northbound					Bent Creek Ranch Rd Eastbound					
Start Time	Left	Thru	Right	Peds	App. Total	Left	Thru	Right	Peds	App. Total	Left	Thru	Right	Peds	App. Total	Left	Thru	Right	Peds	App. Total	Int. Total
Peak Hour Analysis From 06:00 AM to 11:45 AM - Peak 1 of 1																					
Peak Hour for Entire Intersection Begins at 10:00 AM																					
10:00 AM	0	0	0	0	0	0	0	0	0	0	0	0	0	0	0	0	0	0	0	0	0
10:15 AM	0	0	0	0	0	0	0	0	0	0	0	0	0	0	0	0	0	0	0	0	0
10:30 AM	0	0	0	0	0	0	0	0	0	0	0	0	0	0	0	0	0	0	0	0	0
10:45 AM	0	0	**1**	0	**1**	0	0	0	0	0	0	0	0	0	0	0	0	0	0	0	**1**
Total Volume	0	0	1	0	1	0	0	0	0	0	0	0	0	0	0	0	0	0	0	0	1
% App. Total	0	0	100	0		0	0	0	0		0	0	0	0		0	0	0	0		
PHF	.000	.000	.250	.000	.250	.000	.000	.000	.000	.000	.000	.000	.000	.000	.000	.000	.000	.000	.000	.000	.250

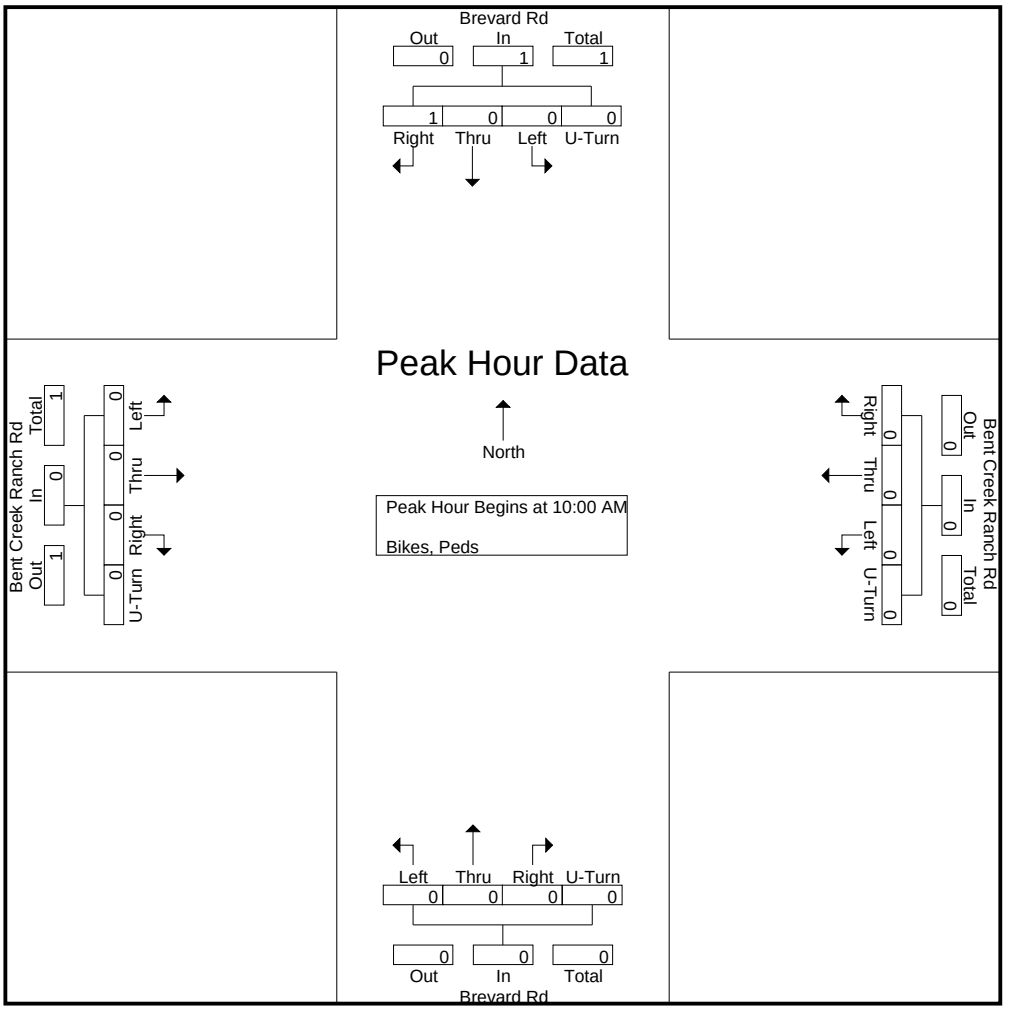

DocuSign Envelope ID: 5C03745C-4B01-4834-A65D-B77F558A4F46

Quality Counts

920 Blairhill Rd, Ste B-106
Charlotte, NC 28217

File Name : 15411708 - Brevard Rd -- Bent Creek Ranch Rd
Site Code : 15411708
Start Date : 4/20/2021
Page No : 4

	Brevard Rd Southbound					Bent Creek Ranch Rd Westbound					Brevard Rd Northbound					Bent Creek Ranch Rd Eastbound					
Start Time	Left	Thru	Right	Peds	App. Total	Left	Thru	Right	Peds	App. Total	Left	Thru	Right	Peds	App. Total	Left	Thru	Right	Peds	App. Total	Int. Total
Peak Hour Analysis From 12:00 PM to 06:45 PM - Peak 1 of 1																					
Peak Hour for Entire Intersection Begins at 03:45 PM																					
03:45 PM	0	0	0	0	0	0	0	0	0	0	**1**	0	0	0	1	0	0	0	0	0	1
04:00 PM	0	0	0	0	0	0	0	0	0	0	0	1	0	0	1	0	0	0	0	0	1
04:15 PM	0	0	0	0	0	0	0	0	0	0	0	0	0	0	0	0	0	0	0	0	0
04:30 PM	0	0	0	0	0	0	0	0	0	0	0	**2**	0	0	**2**	0	0	0	0	0	**2**
Total Volume	0	0	0	0	0	0	0	0	0	0	1	3	0	0	4	0	0	0	0	0	4
% App. Total	0	0	0	0		0	0	0	0		25	75	0	0		0	0	0	0		
PHF	.000	.000	.000	.000	.000	.000	.000	.000	.000	.000	.250	.375	.000	.000	.500	.000	.000	.000	.000	.000	.500

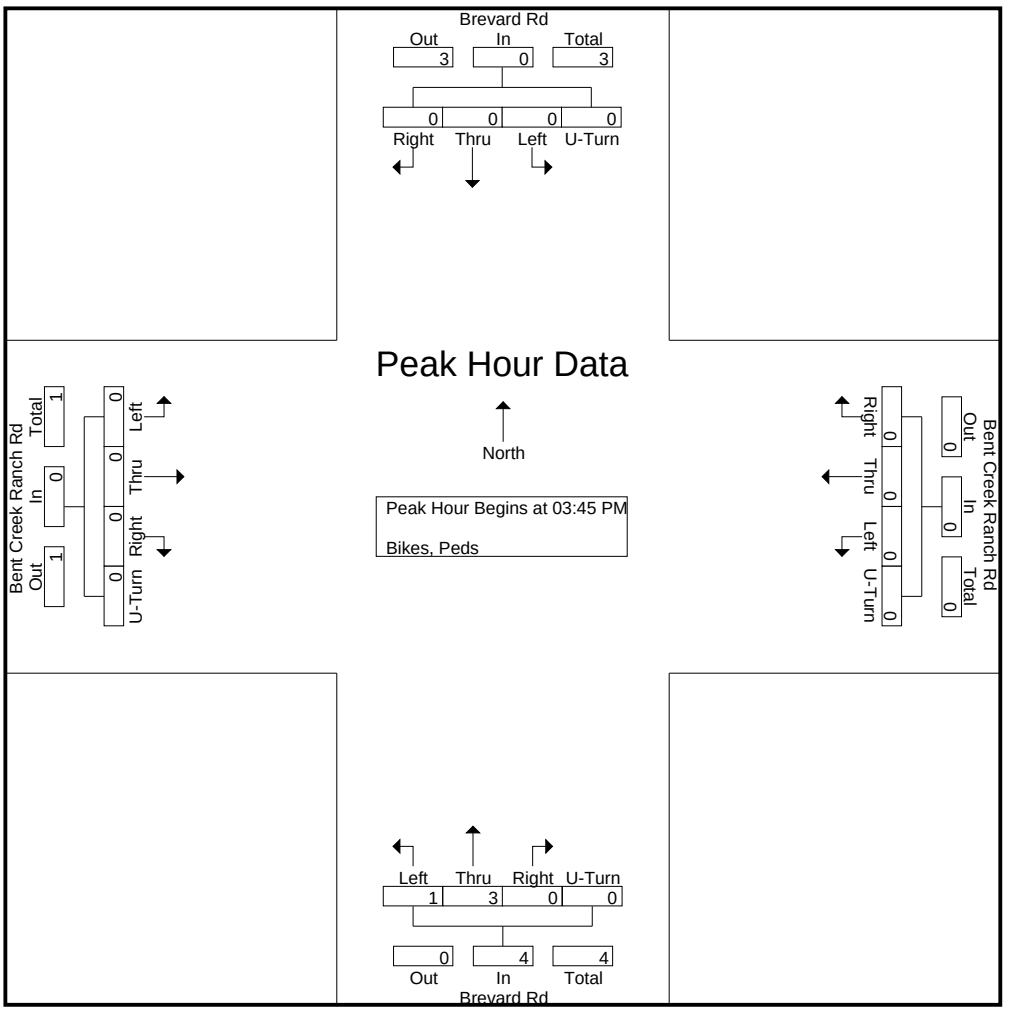

DocuSign Envelope ID: 5C03745C-4B01-4834-A65D-B77F558A4F46

QUALITY COUNTS LLC
920 Blairhill Rd, Suite 106, Charlotte, NC 28217
704.215.4616

Count Number: 15411709
County: Buncombe
City: Asheville
Division: 13

Location: Brevard Rd & Blue Ridge Pkwy
General Location Type: Intersection
Count Type: Turning Movement (Classification)
Count Start Date: 4/20/2021
Time: 6:00 AM – 7:00 PM
Volume: 18,261

Maximum Temperature: 69° F
Minimum Temperature: 40° F
Precipitation: 0.00 in
Snowfall: 0.0 in
Average Sky Cover: 0.2
Weather Conditions: Clear

1. **School in Session:** Yes
2. **Pedestrians Counted**: Yes
3. **Disabled Pedestrians Present**: No
   Description and Approaches Used: N/A
4. **Counted By**: Eric Rogowski
5. **Data Processor**: Jon B
6. **Signal Inventory**: N/A
7. **Data Collection Method**: Video/Count Board
8. **Equipment Operating Properly**: Yes
9. **Area Lighting Present**: Yes
10. **Nearest Roadway Stop Sign < 300 ft:** No
    If yes, list approaches: N/A
11. **Nearest Traffic Signal < 300 ft:** No
    If yes, list approaches: N/A
12. **At-Grade Railroad Crossing Present (<200 ft):** No
    If yes, list approaches & distance: N/A
13. **Other:**

↑ North

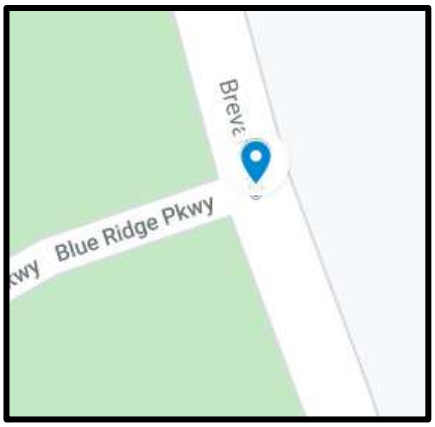

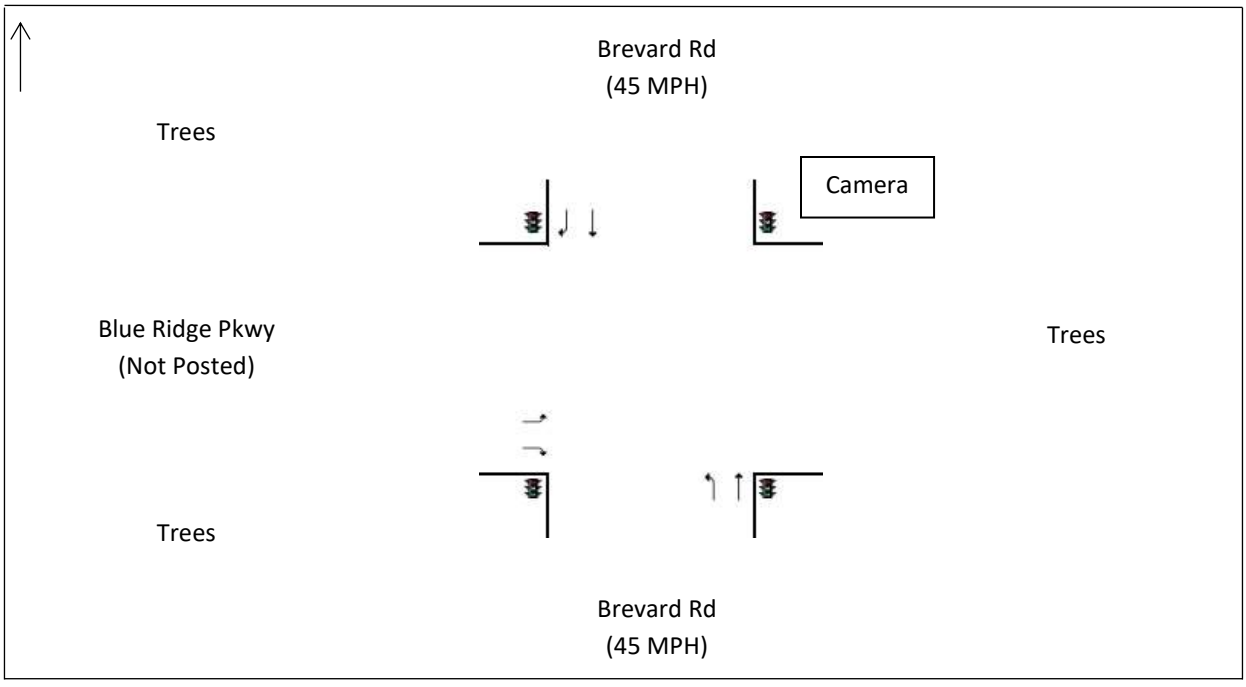

DocuSign Envelope ID: 5C03745C-4B01-4834-A65D-B77F558A4F46

Quality Counts

920 Blairhill Rd, Ste B-106
Charlotte, NC 28217

File Name : 15411709 - Brevard Rd -- Blue Ridge Pkwy
Site Code : 15411709
Start Date : 4/20/2021
Page No : 1

Groups Printed- Classes 1, 2, 3 - Classes 4, 5, 6, 7 - Classes 8, 9, 10 - Classes 11, 12, 13

	Brevard Rd Southbound					Westbound					Brevard Rd Northbound					Blue Ridge Pkwy Eastbound					
Start Time	Left	Thru	Right	U-Turn	App. Total	Left	Thru	Right	U-Turn	App. Total	Left	Thru	Right	U-Turn	App. Total	Left	Thru	Right	U-Turn	App. Total	Int. Total
06:00 AM	0	68	3	0	71	0	0	0	0	0	2	29	0	0	31	0	0	0	0	0	102
06:15 AM	0	66	4	0	70	0	0	0	0	0	2	53	0	0	55	1	0	4	0	5	130
06:30 AM	0	139	5	0	144	0	0	0	0	0	5	81	0	0	86	2	0	6	0	8	238
06:45 AM	0	138	14	0	152	0	0	0	0	0	4	80	0	0	84	0	0	5	0	5	241
Total	0	411	26	0	437	0	0	0	0	0	13	243	0	0	256	3	0	15	0	18	711
07:00 AM	0	133	9	0	142	0	0	0	0	0	10	110	0	0	120	2	0	5	0	7	269
07:15 AM	0	131	12	0	143	0	0	0	0	0	8	134	0	0	142	5	0	4	0	9	294
07:30 AM	0	182	11	0	193	0	0	0	0	0	14	139	0	0	153	5	0	6	0	11	357
07:45 AM	0	157	17	0	174	0	0	0	0	0	10	179	0	0	189	12	0	7	0	19	382
Total	0	603	49	0	652	0	0	0	0	0	42	562	0	0	604	24	0	22	0	46	1302
08:00 AM	0	131	22	0	153	0	0	0	0	0	6	193	0	0	199	15	0	6	0	21	373
08:15 AM	0	138	37	0	175	0	0	0	0	0	11	139	0	0	150	10	0	9	0	19	344
08:30 AM	0	136	22	0	158	0	0	0	0	0	9	141	0	0	150	11	0	6	0	17	325
08:45 AM	0	137	27	0	164	0	0	0	0	0	7	121	0	0	128	18	0	6	0	24	316
Total	0	542	108	0	650	0	0	0	0	0	33	594	0	0	627	54	0	27	0	81	1358
09:00 AM	0	104	15	0	119	0	0	0	0	0	7	101	0	0	108	13	0	8	0	21	248
09:15 AM	0	100	28	0	128	0	0	0	0	0	12	92	0	0	104	10	0	12	0	22	254
09:30 AM	0	94	28	0	122	0	0	0	0	0	17	107	0	0	124	19	0	3	0	22	268
09:45 AM	0	94	25	0	119	0	0	0	0	0	8	106	0	0	114	9	0	5	0	14	247
Total	0	392	96	0	488	0	0	0	0	0	44	406	0	0	450	51	0	28	0	79	1017
10:00 AM	0	82	30	0	112	0	0	0	0	0	9	118	0	0	127	12	0	4	0	16	255
10:15 AM	0	91	28	0	119	0	0	0	0	0	8	97	0	0	105	23	0	8	0	31	255
10:30 AM	0	107	40	0	147	0	0	0	0	0	11	117	0	0	128	16	0	8	0	24	299
10:45 AM	0	109	39	0	148	0	0	0	0	0	16	97	0	0	113	19	0	8	0	27	288
Total	0	389	137	0	526	0	0	0	0	0	44	429	0	0	473	70	0	28	0	98	1097
11:00 AM	0	98	44	0	142	0	0	0	0	0	20	125	0	0	145	28	0	10	0	38	325
11:15 AM	0	109	37	0	146	0	0	0	0	0	15	114	0	0	129	26	0	5	0	31	306
11:30 AM	0	87	24	0	111	0	0	0	0	0	9	122	0	0	131	30	0	11	0	41	283
11:45 AM	0	111	39	0	150	0	0	0	0	0	16	113	0	0	129	36	0	9	0	45	324
Total	0	405	144	0	549	0	0	0	0	0	60	474	0	0	534	120	0	35	0	155	1238
12:00 PM	0	115	42	0	157	0	0	0	0	0	20	111	0	0	131	27	0	16	0	43	331
12:15 PM	0	127	33	0	160	0	0	0	0	0	18	117	0	0	135	32	0	13	0	45	340
12:30 PM	0	137	47	0	184	0	0	0	0	0	13	149	0	0	162	38	0	14	0	52	398
12:45 PM	0	127	39	0	166	0	0	0	0	0	18	141	0	0	159	30	0	15	0	45	370
Total	0	506	161	0	667	0	0	0	0	0	69	518	0	0	587	127	0	58	0	185	1439
01:00 PM	0	97	32	0	129	0	0	0	0	0	14	119	0	0	133	40	0	23	0	63	325
01:15 PM	0	123	31	0	154	0	0	0	0	0	23	144	0	0	167	26	0	20	0	46	367
01:30 PM	0	127	32	0	159	0	0	0	0	0	14	141	0	0	155	32	0	14	0	46	360
01:45 PM	0	129	45	0	174	0	0	0	0	0	13	122	0	0	135	35	0	25	0	60	369
Total	0	476	140	0	616	0	0	0	0	0	64	526	0	0	590	133	0	82	0	215	1421
02:00 PM	0	153	34	0	187	0	0	0	0	0	17	144	0	0	161	41	0	18	0	59	407
02:15 PM	0	152	32	0	184	0	0	0	0	0	11	134	0	0	145	43	0	23	0	66	395
02:30 PM	0	162	30	0	192	0	0	0	0	0	16	184	0	0	200	35	0	22	0	57	449
02:45 PM	0	148	39	0	187	0	0	0	0	0	25	186	0	0	211	40	0	18	0	58	456
Total	0	615	135	0	750	0	0	0	0	0	69	648	0	0	717	159	0	81	0	240	1707
03:00 PM	0	121	30	0	151	0	0	0	0	0	19	221	0	0	240	38	0	14	0	52	443
03:15 PM	0	155	42	0	197	0	0	0	0	0	18	223	0	0	241	51	0	30	0	81	519
03:30 PM	0	140	28	0	168	0	0	0	0	0	15	176	0	0	191	53	0	26	0	79	438

DocuSign Envelope ID: 5C03745C-4B01-4834-A65D-B77F558A4F46

Quality Counts

920 Blairhill Rd, Ste B-106
Charlotte, NC 28217

File Name : 15411709 - Brevard Rd -- Blue Ridge Pkwy
Site Code : 15411709
Start Date : 4/20/2021

Groups Printed- Classes 1, 2, 3 - Classes 4, 5, 6, 7 - Classes 8, 9, 10 - Classes 11, 12, 13

	Brevard Rd Southbound					Westbound					Brevard Rd Northbound					Blue Ridge Pkwy Eastbound					
Start Time	Left	Thru	Right	U-Turn	App. Total	Left	Thru	Right	U-Turn	App. Total	Left	Thru	Right	U-Turn	App. Total	Left	Thru	Right	U-Turn	App. Total	Int. Total
03:45 PM	0	134	34	0	168	0	0	0	0	0	6	207	0	0	213	33	0	23	0	56	437
Total	0	550	134	0	684	0	0	0	0	0	58	827	0	0	885	175	0	93	0	268	1837
04:00 PM	0	169	45	0	214	0	0	0	0	0	15	200	0	0	215	56	0	13	0	69	498
04:15 PM	0	155	35	0	190	0	0	0	0	0	17	184	0	0	201	48	0	36	0	84	475
04:30 PM	0	185	35	0	220	0	0	0	0	0	13	197	0	0	210	54	0	20	0	74	504
04:45 PM	0	118	34	0	152	0	0	0	0	0	20	230	0	0	250	40	0	23	0	63	465
Total	0	627	149	0	776	0	0	0	0	0	65	811	0	0	876	198	0	92	0	290	1942
05:00 PM	0	166	35	0	201	0	0	0	0	0	16	218	0	0	234	35	0	21	0	56	491
05:15 PM	0	161	21	0	182	0	0	0	0	0	15	238	0	0	253	45	0	27	0	72	507
05:30 PM	0	146	25	0	171	0	0	0	0	0	16	232	0	0	248	56	0	24	0	80	499
05:45 PM	0	169	23	0	192	0	0	0	0	0	12	166	0	0	178	35	0	22	0	57	427
Total	0	642	104	0	746	0	0	0	0	0	59	854	0	0	913	171	0	94	0	265	1924
06:00 PM	0	139	18	0	157	0	0	0	0	0	14	147	0	0	161	36	0	19	0	55	373
06:15 PM	0	112	15	0	127	0	0	0	0	0	15	139	0	0	154	34	0	17	0	51	332
06:30 PM	0	109	14	0	123	0	0	0	0	0	16	100	0	0	116	31	0	14	0	45	284
06:45 PM	0	85	17	0	102	0	0	0	0	0	8	132	0	0	140	24	0	13	0	37	279
Total	0	445	64	0	509	0	0	0	0	0	53	518	0	0	571	125	0	63	0	188	1268
Grand Total	0	6603	1447	0	8050	0	0	0	0	0	673	7410	0	0	8083	1410	0	718	0	2128	18261
Apprch %	0	82	18	0		0	0	0	0		8.3	91.7	0	0		66.3	0	33.7	0		
Total %	0	36.2	7.9	0	44.1	0	0	0	0	0	3.7	40.6	0	0	44.3	7.7	0	3.9	0	11.7	
Classes 1, 2, 3	0	6181	1442	0	7623	0	0	0	0	0	663	6879	0	0	7542	1401	0	714	0	2115	17280
% Classes 1, 2, 3	0	93.6	99.7	0	94.7	0	0	0	0	0	98.5	92.8	0	0	93.3	99.4	0	99.4	0	99.4	94.6
Classes 4, 5, 6, 7	0	357	5	0	362	0	0	0	0	0	10	447	0	0	457	9	0	4	0	13	832
% Classes 4, 5, 6, 7	0	5.4	0.3	0	4.5	0	0	0	0	0	1.5	6	0	0	5.7	0.6	0	0.6	0	0.6	4.6
Classes 8, 9, 10	0	65	0	0	65	0	0	0	0	0	0	84	0	0	84	0	0	0	0	0	149
% Classes 8, 9, 10	0	1	0	0	0.8	0	0	0	0	0	0	1.1	0	0	1	0	0	0	0	0	0.8
Classes 11, 12, 13	0	0	0	0	0	0	0	0	0	0	0	0	0	0	0	0	0	0	0	0	0
% Classes 11, 12, 13	0	0	0	0	0	0	0	0	0	0	0	0	0	0	0	0	0	0	0	0	0

DocuSign Envelope ID: 5C03745C-4B01-4834-A65D-B77F558A4F46

Quality Counts

920 Blairhill Rd, Ste B-106
Charlotte, NC 28217

File Name : 15411709 - Brevard Rd -- Blue Ridge Pkwy
Site Code : 15411709
Start Date : 4/20/2021
Page No : 3

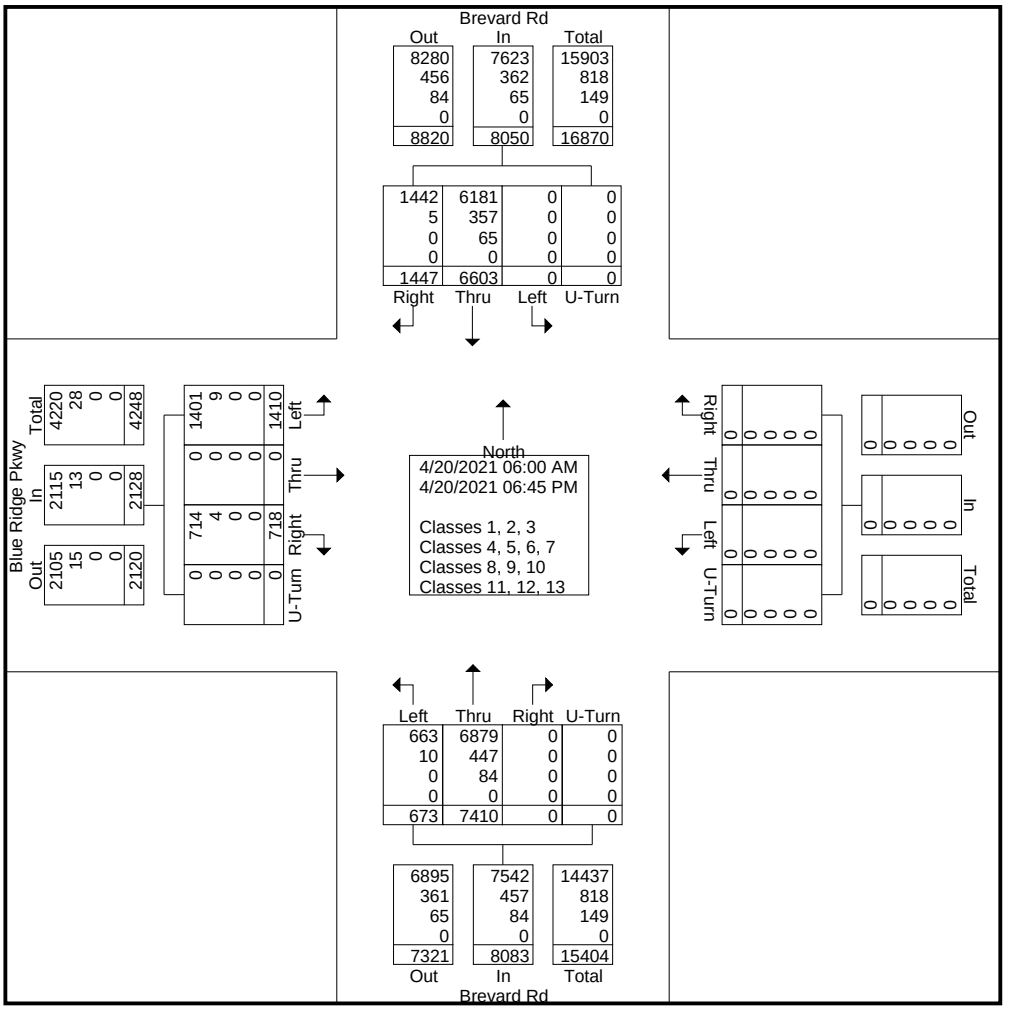

DocuSign Envelope ID: 5C03745C-4B01-4834-A65D-B77F558A4F46

Quality Counts

920 Blairhill Rd, Ste B-106
Charlotte, NC 28217

File Name : 15411709 - Brevard Rd -- Blue Ridge Pkwy
Site Code : 15411709
Start Date : 4/20/2021
Page No : 4

	Brevard Rd Southbound					Westbound					Brevard Rd Northbound					Blue Ridge Pkwy Eastbound					
Start Time	Left	Thru	Right	U-Turn	App. Total	Left	Thru	Right	U-Turn	App. Total	Left	Thru	Right	U-Turn	App. Total	Left	Thru	Right	U-Turn	App. Total	Int. Total
Peak Hour Analysis From 06:00 AM to 11:45 AM - Peak 1 of 1																					
Peak Hour for Entire Intersection Begins at 07:30 AM																					
07:30 AM	0	**182**	11	0	**193**	0	0	0	0	0	**14**	139	0	0	153	5	0	6	0	11	357
07:45 AM	0	157	17	0	174	0	0	0	0	0	10	179	0	0	189	12	0	7	0	19	**382**
08:00 AM	0	131	22	0	153	0	0	0	0	0	6	**193**	0	0	**199**	**15**	0	6	0	**21**	373
08:15 AM	0	138	**37**	0	175	0	0	0	0	0	11	139	0	0	150	10	0	**9**	0	19	344
Total Volume	0	608	87	0	695	0	0	0	0	0	41	650	0	0	691	42	0	28	0	70	1456
% App. Total	0	87.5	12.5	0		0	0	0	0		5.9	94.1	0	0		60	0	40	0		
PHF	.000	.835	.588	.000	.900	.000	.000	.000	.000	.000	.732	.842	.000	.000	.868	.700	.000	.778	.000	.833	.953

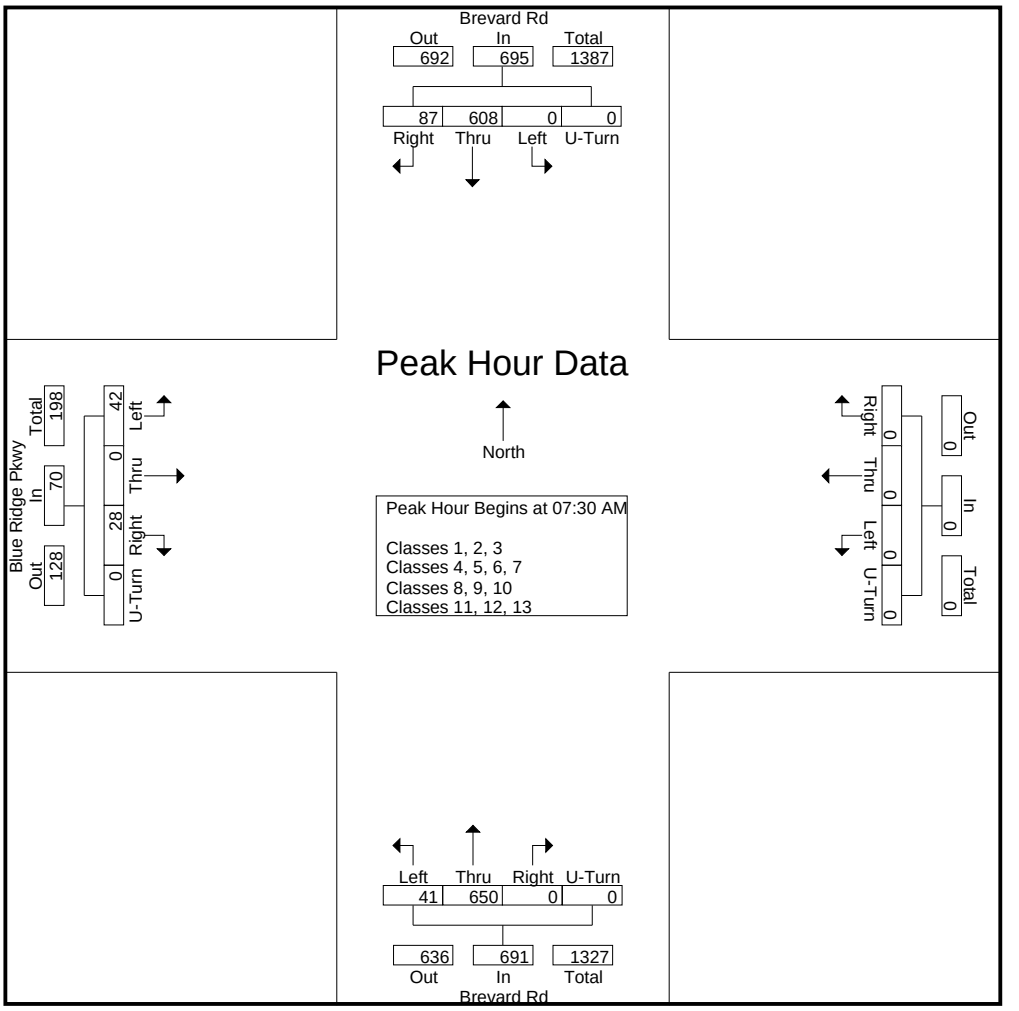

DocuSign Envelope ID: 5C03745C-4B01-4834-A65D-B77F558A4F46

Quality Counts

920 Blairhill Rd, Ste B-106
Charlotte, NC 28217

File Name : 15411709 - Brevard Rd -- Blue Ridge Pkwy
Site Code : 15411709
Start Date : 4/20/2021

	Brevard Rd Southbound					Westbound					Brevard Rd Northbound					Blue Ridge Pkwy Eastbound					
Start Time	Left	Thru	Right	U-Turn	App. Total	Left	Thru	Right	U-Turn	App. Total	Left	Thru	Right	U-Turn	App. Total	Left	Thru	Right	U-Turn	App. Total	Int. Total
Peak Hour Analysis From 12:00 PM to 06:45 PM - Peak 1 of 1																					
Peak Hour for Entire Intersection Begins at 04:30 PM																					
04:30 PM	0	**185**	**35**	0	**220**	0	0	0	0	0	13	197	0	0	210	**54**	0	20	0	**74**	504
04:45 PM	0	118	34	0	152	0	0	0	0	0	**20**	230	0	0	250	40	0	23	0	63	465
05:00 PM	0	166	35	0	201	0	0	0	0	0	16	218	0	0	234	35	0	21	0	56	491
05:15 PM	0	161	21	0	182	0	0	0	0	0	15	**238**	0	0	**253**	45	0	**27**	0	72	**507**
Total Volume	0	630	125	0	755	0	0	0	0	0	64	883	0	0	947	174	0	91	0	265	1967
% App. Total	0	83.4	16.6	0		0	0	0	0		6.8	93.2	0	0		65.7	0	34.3	0		
PHF	.000	.851	.893	.000	.858	.000	.000	.000	.000	.000	.800	.928	.000	.000	.936	.806	.000	.843	.000	.895	.970

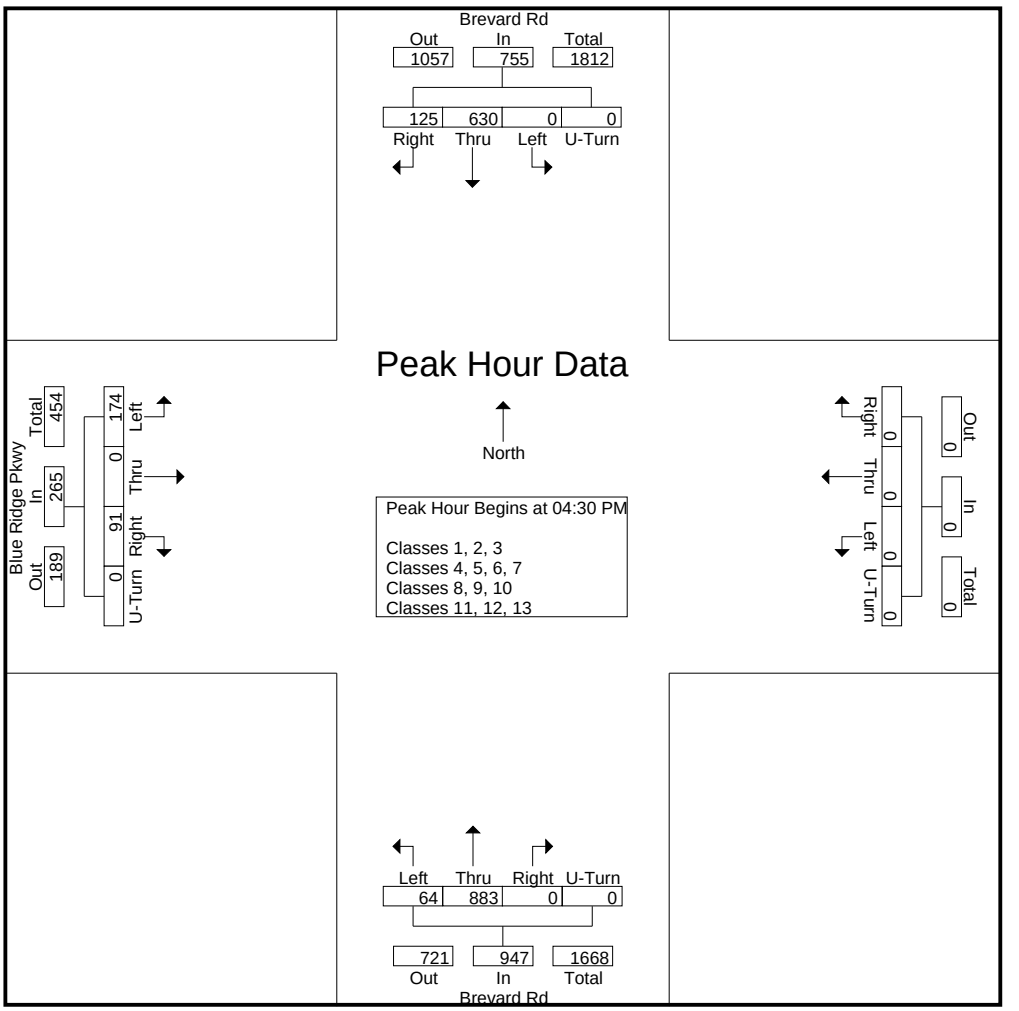

DocuSign Envelope ID: 5C03745C-4B01-4834-A65D-B77F558A4F46

Quality Counts

920 Blairhill Rd, Ste B-106
Charlotte, NC 28217

File Name : 15411709 - Brevard Rd -- Blue Ridge Pkwy
Site Code : 15411709
Start Date : 4/20/2021
Page No : 1

Groups Printed- Classes 1, 2, 3

	Brevard Rd Southbound					Westbound					Brevard Rd Northbound					Blue Ridge Pkwy Eastbound					
Start Time	Left	Thru	Right	U-Turn	App. Total	Left	Thru	Right	U-Turn	App. Total	Left	Thru	Right	U-Turn	App. Total	Left	Thru	Right	U-Turn	App. Total	Int. Total
06:00 AM	0	66	3	0	69	0	0	0	0	0	2	22	0	0	24	0	0	0	0	0	93
06:15 AM	0	64	4	0	68	0	0	0	0	0	2	43	0	0	45	1	0	4	0	5	118
06:30 AM	0	134	5	0	139	0	0	0	0	0	5	73	0	0	78	2	0	6	0	8	225
06:45 AM	0	133	14	0	147	0	0	0	0	0	4	75	0	0	79	0	0	5	0	5	231
Total	0	397	26	0	423	0	0	0	0	0	13	213	0	0	226	3	0	15	0	18	667
07:00 AM	0	127	9	0	136	0	0	0	0	0	10	107	0	0	117	2	0	5	0	7	260
07:15 AM	0	127	12	0	139	0	0	0	0	0	8	128	0	0	136	5	0	4	0	9	284
07:30 AM	0	170	11	0	181	0	0	0	0	0	14	130	0	0	144	5	0	6	0	11	336
07:45 AM	0	146	17	0	163	0	0	0	0	0	10	171	0	0	181	12	0	7	0	19	363
Total	0	570	49	0	619	0	0	0	0	0	42	536	0	0	578	24	0	22	0	46	1243
08:00 AM	0	121	22	0	143	0	0	0	0	0	6	182	0	0	188	15	0	6	0	21	352
08:15 AM	0	131	37	0	168	0	0	0	0	0	11	130	0	0	141	10	0	9	0	19	328
08:30 AM	0	128	22	0	150	0	0	0	0	0	9	130	0	0	139	11	0	6	0	17	306
08:45 AM	0	125	27	0	152	0	0	0	0	0	7	111	0	0	118	18	0	6	0	24	294
Total	0	505	108	0	613	0	0	0	0	0	33	553	0	0	586	54	0	27	0	81	1280
09:00 AM	0	95	15	0	110	0	0	0	0	0	7	90	0	0	97	13	0	8	0	21	228
09:15 AM	0	87	28	0	115	0	0	0	0	0	11	85	0	0	96	10	0	12	0	22	233
09:30 AM	0	88	28	0	116	0	0	0	0	0	17	95	0	0	112	19	0	3	0	22	250
09:45 AM	0	85	25	0	110	0	0	0	0	0	8	95	0	0	103	9	0	5	0	14	227
Total	0	355	96	0	451	0	0	0	0	0	43	365	0	0	408	51	0	28	0	79	938
10:00 AM	0	73	30	0	103	0	0	0	0	0	9	104	0	0	113	12	0	4	0	16	232
10:15 AM	0	79	27	0	106	0	0	0	0	0	8	89	0	0	97	23	0	7	0	30	233
10:30 AM	0	99	40	0	139	0	0	0	0	0	10	106	0	0	116	15	0	8	0	23	278
10:45 AM	0	99	39	0	138	0	0	0	0	0	15	80	0	0	95	19	0	8	0	27	260
Total	0	350	136	0	486	0	0	0	0	0	42	379	0	0	421	69	0	27	0	96	1003
11:00 AM	0	86	44	0	130	0	0	0	0	0	19	111	0	0	130	28	0	9	0	37	297
11:15 AM	0	97	37	0	134	0	0	0	0	0	15	104	0	0	119	25	0	5	0	30	283
11:30 AM	0	79	24	0	103	0	0	0	0	0	9	108	0	0	117	30	0	11	0	41	261
11:45 AM	0	104	39	0	143	0	0	0	0	0	15	105	0	0	120	36	0	9	0	45	308
Total	0	366	144	0	510	0	0	0	0	0	58	428	0	0	486	119	0	34	0	153	1149
12:00 PM	0	104	42	0	146	0	0	0	0	0	20	101	0	0	121	26	0	16	0	42	309
12:15 PM	0	119	33	0	152	0	0	0	0	0	18	108	0	0	126	32	0	13	0	45	323
12:30 PM	0	132	47	0	179	0	0	0	0	0	13	136	0	0	149	38	0	14	0	52	380
12:45 PM	0	116	38	0	154	0	0	0	0	0	17	128	0	0	145	30	0	14	0	44	343
Total	0	471	160	0	631	0	0	0	0	0	68	473	0	0	541	126	0	57	0	183	1355
01:00 PM	0	88	31	0	119	0	0	0	0	0	14	112	0	0	126	39	0	23	0	62	307
01:15 PM	0	117	31	0	148	0	0	0	0	0	22	136	0	0	158	26	0	19	0	45	351
01:30 PM	0	116	32	0	148	0	0	0	0	0	14	130	0	0	144	32	0	14	0	46	338
01:45 PM	0	121	45	0	166	0	0	0	0	0	12	115	0	0	127	35	0	25	0	60	353
Total	0	442	139	0	581	0	0	0	0	0	62	493	0	0	555	132	0	81	0	213	1349
02:00 PM	0	142	34	0	176	0	0	0	0	0	16	137	0	0	153	41	0	18	0	59	388
02:15 PM	0	143	32	0	175	0	0	0	0	0	11	127	0	0	138	42	0	23	0	65	378
02:30 PM	0	151	30	0	181	0	0	0	0	0	16	169	0	0	185	35	0	22	0	57	423
02:45 PM	0	143	39	0	182	0	0	0	0	0	25	174	0	0	199	39	0	18	0	57	438
Total	0	579	135	0	714	0	0	0	0	0	68	607	0	0	675	157	0	81	0	238	1627
03:00 PM	0	113	28	0	141	0	0	0	0	0	19	212	0	0	231	38	0	14	0	52	424
03:15 PM	0	139	42	0	181	0	0	0	0	0	18	202	0	0	220	51	0	30	0	81	482
03:30 PM	0	129	28	0	157	0	0	0	0	0	15	158	0	0	173	53	0	26	0	79	409

DocuSign Envelope ID: 5C03745C-4B01-4834-A65D-B77F558A4F46

Quality Counts

920 Blairhill Rd, Ste B-106
Charlotte, NC 28217

File Name : 15411709 - Brevard Rd -- Blue Ridge Pkwy
Site Code : 15411709
Start Date : 4/20/2021

Groups Printed- Classes 1, 2, 3

	Brevard Rd Southbound					Westbound					Brevard Rd Northbound					Blue Ridge Pkwy Eastbound					
Start Time	Left	Thru	Right	U-Turn	App. Total	Left	Thru	Right	U-Turn	App. Total	Left	Thru	Right	U-Turn	App. Total	Left	Thru	Right	U-Turn	App. Total	Int. Total
03:45 PM	0	120	34	0	154	0	0	0	0	0	6	194	0	0	200	33	0	23	0	56	410
Total	0	501	132	0	633	0	0	0	0	0	58	766	0	0	824	175	0	93	0	268	1725
04:00 PM	0	158	45	0	203	0	0	0	0	0	15	188	0	0	203	56	0	13	0	69	475
04:15 PM	0	144	35	0	179	0	0	0	0	0	17	170	0	0	187	48	0	36	0	84	450
04:30 PM	0	176	35	0	211	0	0	0	0	0	13	181	0	0	194	53	0	20	0	73	478
04:45 PM	0	115	34	0	149	0	0	0	0	0	20	220	0	0	240	38	0	23	0	61	450
Total	0	593	149	0	742	0	0	0	0	0	65	759	0	0	824	195	0	92	0	287	1853
05:00 PM	0	160	35	0	195	0	0	0	0	0	16	201	0	0	217	35	0	21	0	56	468
05:15 PM	0	155	21	0	176	0	0	0	0	0	15	225	0	0	240	45	0	27	0	72	488
05:30 PM	0	144	25	0	169	0	0	0	0	0	15	222	0	0	237	56	0	24	0	80	486
05:45 PM	0	163	23	0	186	0	0	0	0	0	12	161	0	0	173	35	0	22	0	57	416
Total	0	622	104	0	726	0	0	0	0	0	58	809	0	0	867	171	0	94	0	265	1858
06:00 PM	0	133	18	0	151	0	0	0	0	0	14	139	0	0	153	36	0	19	0	55	359
06:15 PM	0	108	15	0	123	0	0	0	0	0	15	134	0	0	149	34	0	17	0	51	323
06:30 PM	0	106	14	0	120	0	0	0	0	0	16	98	0	0	114	31	0	14	0	45	279
06:45 PM	0	83	17	0	100	0	0	0	0	0	8	127	0	0	135	24	0	13	0	37	272
Total	0	430	64	0	494	0	0	0	0	0	53	498	0	0	551	125	0	63	0	188	1233
Grand Total	0	6181	1442	0	7623	0	0	0	0	0	663	6879	0	0	7542	1401	0	714	0	2115	17280
Apprch %	0	81.1	18.9	0		0	0	0	0		8.8	91.2	0	0		66.2	0	33.8	0		
Total %	0	35.8	8.3	0	44.1	0	0	0	0	0	3.8	39.8	0	0	43.6	8.1	0	4.1	0	12.2	

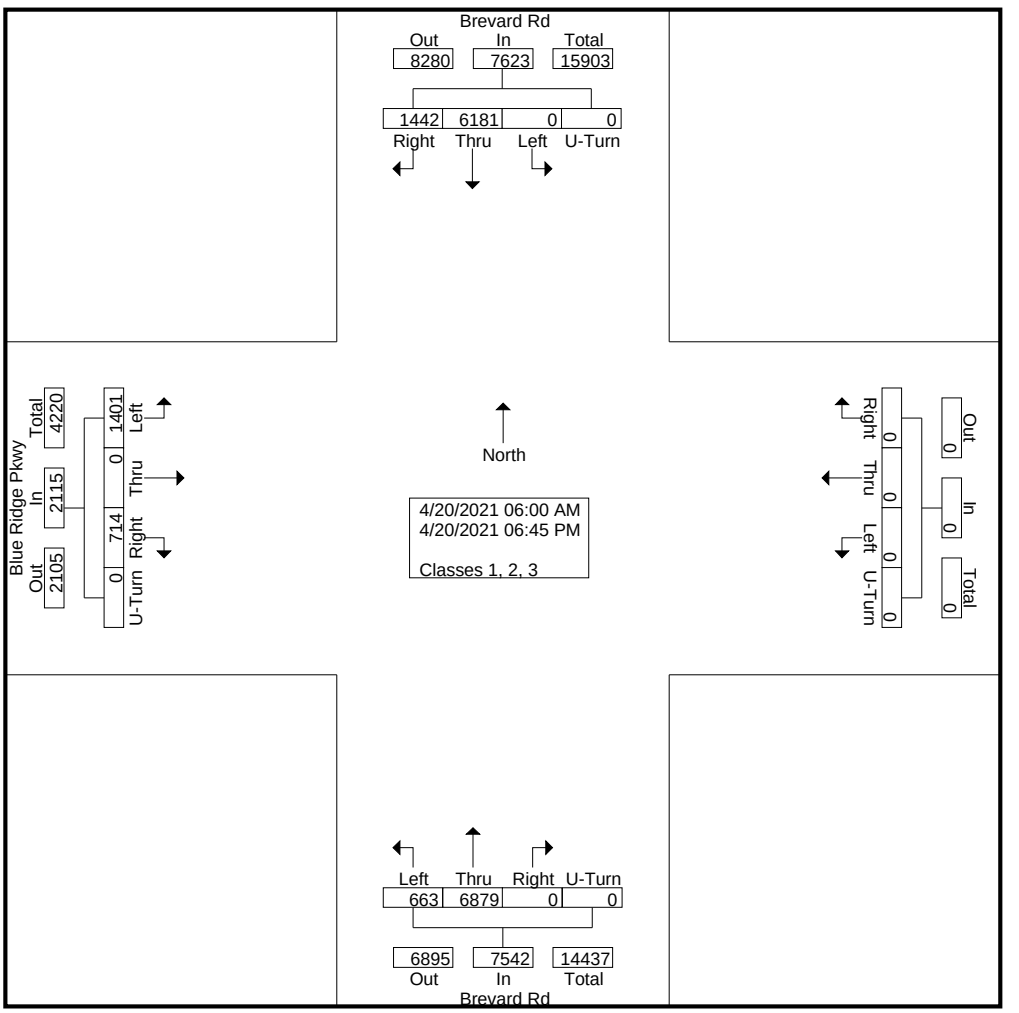

DocuSign Envelope ID: 5C03745C-4B01-4834-A65D-B77F558A4F46

Quality Counts

920 Blairhill Rd, Ste B-106
Charlotte, NC 28217

File Name : 15411709 - Brevard Rd -- Blue Ridge Pkwy
Site Code : 15411709
Start Date : 4/20/2021
Page No : 3

	Brevard Rd Southbound					Westbound					Brevard Rd Northbound					Blue Ridge Pkwy Eastbound					
Start Time	Left	Thru	Right	U-Turn	App. Total	Left	Thru	Right	U-Turn	App. Total	Left	Thru	Right	U-Turn	App. Total	Left	Thru	Right	U-Turn	App. Total	Int. Total
Peak Hour Analysis From 06:00 AM to 11:45 AM - Peak 1 of 1																					
Peak Hour for Entire Intersection Begins at 07:30 AM																					
07:30 AM	0	**170**	11	0	**181**	0	0	0	0	0	**14**	130	0	0	144	5	0	6	0	11	336
07:45 AM	0	146	17	0	163	0	0	0	0	0	10	171	0	0	181	12	0	7	0	19	**363**
08:00 AM	0	121	22	0	143	0	0	0	0	0	6	**182**	0	0	**188**	**15**	0	6	0	**21**	352
08:15 AM	0	131	**37**	0	168	0	0	0	0	0	11	130	0	0	141	10	0	**9**	0	19	328
Total Volume	0	568	87	0	655	0	0	0	0	0	41	613	0	0	654	42	0	28	0	70	1379
% App. Total	0	86.7	13.3	0		0	0	0	0		6.3	93.7	0	0		60	0	40	0		
PHF	.000	.835	.588	.000	.905	.000	.000	.000	.000	.000	.732	.842	.000	.000	.870	.700	.000	.778	.000	.833	.950

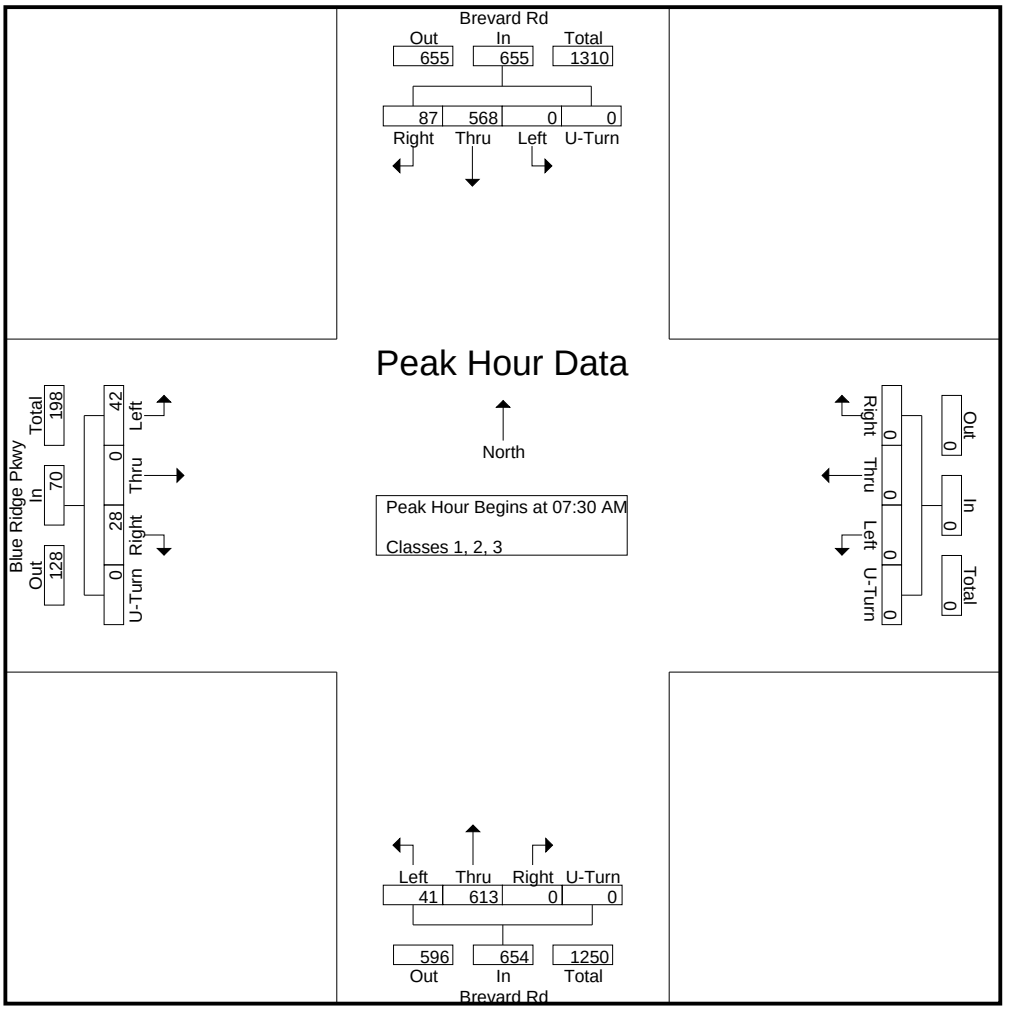

DocuSign Envelope ID: 5C03745C-4B01-4834-A65D-B77F558A4F46

Quality Counts

920 Blairhill Rd, Ste B-106
Charlotte, NC 28217

File Name : 15411709 - Brevard Rd -- Blue Ridge Pkwy
Site Code : 15411709
Start Date : 4/20/2021

	Brevard Rd Southbound					Westbound					Brevard Rd Northbound					Blue Ridge Pkwy Eastbound					
Start Time	Left	Thru	Right	U-Turn	App. Total	Left	Thru	Right	U-Turn	App. Total	Left	Thru	Right	U-Turn	App. Total	Left	Thru	Right	U-Turn	App. Total	Int. Total
Peak Hour Analysis From 12:00 PM to 06:45 PM - Peak 1 of 1																					
Peak Hour for Entire Intersection Begins at 04:45 PM																					
04:45 PM	0	115	34	0	149	0	0	0	0	0	**20**	220	0	0	**240**	38	0	23	0	61	450
05:00 PM	0	**160**	**35**	0	**195**	0	0	0	0	0	16	201	0	0	217	35	0	21	0	56	468
05:15 PM	0	155	21	0	176	0	0	0	0	0	15	**225**	0	0	240	45	0	**27**	0	72	**488**
05:30 PM	0	144	25	0	169	0	0	0	0	0	15	222	0	0	237	**56**	0	24	0	**80**	486
Total Volume	0	574	115	0	689	0	0	0	0	0	66	868	0	0	934	174	0	95	0	269	1892
% App. Total	0	83.3	16.7	0		0	0	0	0		7.1	92.9	0	0		64.7	0	35.3	0		
PHF	.000	.897	.821	.000	.883	.000	.000	.000	.000	.000	.825	.964	.000	.000	.973	.777	.000	.880	.000	.841	.969

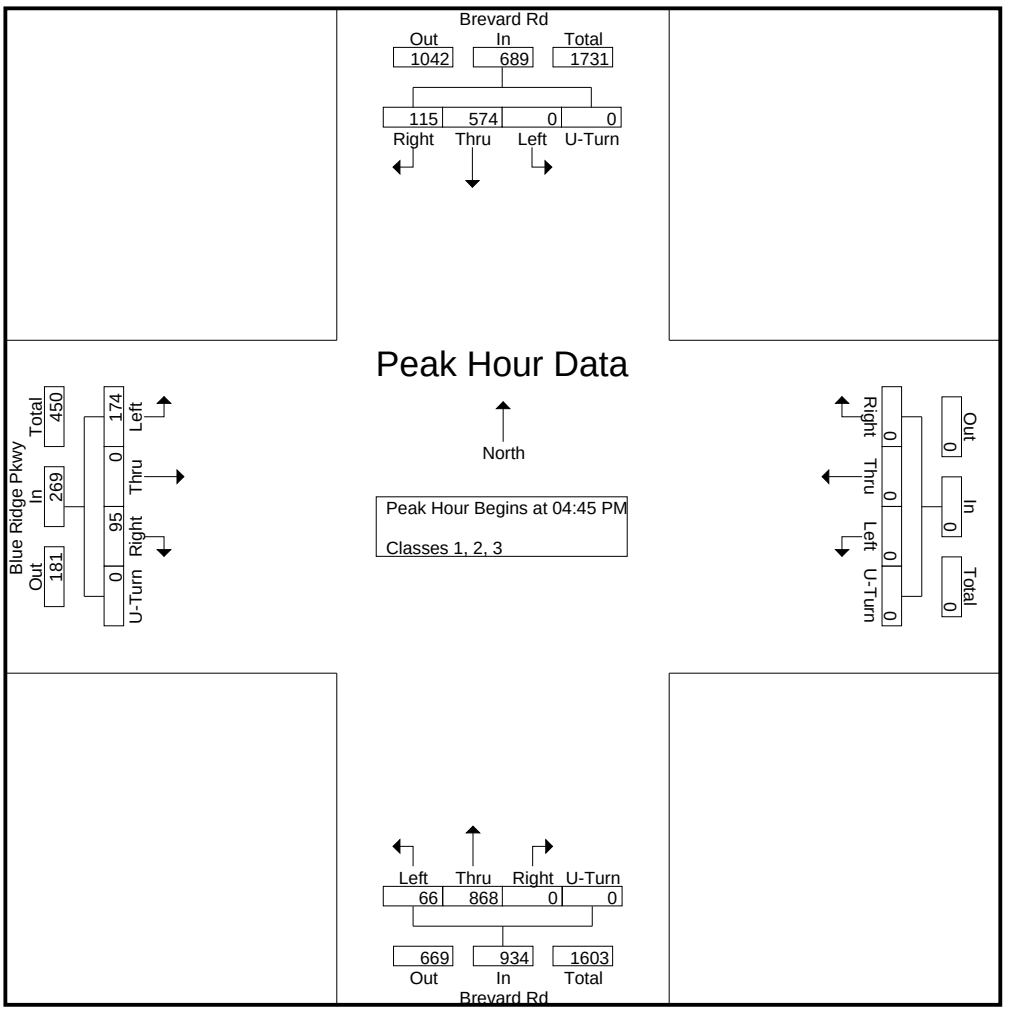

DocuSign Envelope ID: 5C03745C-4B01-4834-A65D-B77F558A4F46

Quality Counts

920 Blairhill Rd, Ste B-106
Charlotte, NC 28217

File Name : 15411709 - Brevard Rd -- Blue Ridge Pkwy
Site Code : 15411709
Start Date : 4/20/2021
Page No : 1

Groups Printed- Classes 4, 5, 6, 7

	Brevard Rd Southbound					Westbound					Brevard Rd Northbound					Blue Ridge Pkwy Eastbound					
Start Time	Left	Thru	Right	U-Turn	App. Total	Left	Thru	Right	U-Turn	App. Total	Left	Thru	Right	U-Turn	App. Total	Left	Thru	Right	U-Turn	App. Total	Int. Total
06:00 AM	0	1	0	0	1	0	0	0	0	0	0	6	0	0	6	0	0	0	0	0	7
06:15 AM	0	2	0	0	2	0	0	0	0	0	0	10	0	0	10	0	0	0	0	0	12
06:30 AM	0	5	0	0	5	0	0	0	0	0	0	8	0	0	8	0	0	0	0	0	13
06:45 AM	0	5	0	0	5	0	0	0	0	0	0	4	0	0	4	0	0	0	0	0	9
Total	0	13	0	0	13	0	0	0	0	0	0	28	0	0	28	0	0	0	0	0	41
07:00 AM	0	4	0	0	4	0	0	0	0	0	0	2	0	0	2	0	0	0	0	0	6
07:15 AM	0	4	0	0	4	0	0	0	0	0	0	5	0	0	5	0	0	0	0	0	9
07:30 AM	0	11	0	0	11	0	0	0	0	0	0	9	0	0	9	0	0	0	0	0	20
07:45 AM	0	8	0	0	8	0	0	0	0	0	0	7	0	0	7	0	0	0	0	0	15
Total	0	27	0	0	27	0	0	0	0	0	0	23	0	0	23	0	0	0	0	0	50
08:00 AM	0	10	0	0	10	0	0	0	0	0	0	7	0	0	7	0	0	0	0	0	17
08:15 AM	0	5	0	0	5	0	0	0	0	0	0	8	0	0	8	0	0	0	0	0	13
08:30 AM	0	6	0	0	6	0	0	0	0	0	0	10	0	0	10	0	0	0	0	0	16
08:45 AM	0	11	0	0	11	0	0	0	0	0	0	9	0	0	9	0	0	0	0	0	20
Total	0	32	0	0	32	0	0	0	0	0	0	34	0	0	34	0	0	0	0	0	66
09:00 AM	0	7	0	0	7	0	0	0	0	0	0	9	0	0	9	0	0	0	0	0	16
09:15 AM	0	9	0	0	9	0	0	0	0	0	1	5	0	0	6	0	0	0	0	0	15
09:30 AM	0	5	0	0	5	0	0	0	0	0	0	9	0	0	9	0	0	0	0	0	14
09:45 AM	0	8	0	0	8	0	0	0	0	0	0	9	0	0	9	0	0	0	0	0	17
Total	0	29	0	0	29	0	0	0	0	0	1	32	0	0	33	0	0	0	0	0	62
10:00 AM	0	5	0	0	5	0	0	0	0	0	0	10	0	0	10	0	0	0	0	0	15
10:15 AM	0	11	1	0	12	0	0	0	0	0	0	7	0	0	7	0	0	1	0	1	20
10:30 AM	0	4	0	0	4	0	0	0	0	0	1	8	0	0	9	1	0	0	0	1	14
10:45 AM	0	8	0	0	8	0	0	0	0	0	1	17	0	0	18	0	0	0	0	0	26
Total	0	28	1	0	29	0	0	0	0	0	2	42	0	0	44	1	0	1	0	2	75
11:00 AM	0	11	0	0	11	0	0	0	0	0	1	10	0	0	11	0	0	1	0	1	23
11:15 AM	0	11	0	0	11	0	0	0	0	0	0	8	0	0	8	1	0	0	0	1	20
11:30 AM	0	8	0	0	8	0	0	0	0	0	0	11	0	0	11	0	0	0	0	0	19
11:45 AM	0	7	0	0	7	0	0	0	0	0	1	5	0	0	6	0	0	0	0	0	13
Total	0	37	0	0	37	0	0	0	0	0	2	34	0	0	36	1	0	1	0	2	75
12:00 PM	0	10	0	0	10	0	0	0	0	0	0	8	0	0	8	1	0	0	0	1	19
12:15 PM	0	6	0	0	6	0	0	0	0	0	0	7	0	0	7	0	0	0	0	0	13
12:30 PM	0	4	0	0	4	0	0	0	0	0	0	10	0	0	10	0	0	0	0	0	14
12:45 PM	0	7	1	0	8	0	0	0	0	0	1	10	0	0	11	0	0	1	0	1	20
Total	0	27	1	0	28	0	0	0	0	0	1	35	0	0	36	1	0	1	0	2	66
01:00 PM	0	9	1	0	10	0	0	0	0	0	0	4	0	0	4	1	0	0	0	1	15
01:15 PM	0	6	0	0	6	0	0	0	0	0	1	8	0	0	9	0	0	1	0	1	16
01:30 PM	0	9	0	0	9	0	0	0	0	0	0	9	0	0	9	0	0	0	0	0	18
01:45 PM	0	8	0	0	8	0	0	0	0	0	1	7	0	0	8	0	0	0	0	0	16
Total	0	32	1	0	33	0	0	0	0	0	2	28	0	0	30	1	0	1	0	2	65
02:00 PM	0	9	0	0	9	0	0	0	0	0	1	5	0	0	6	0	0	0	0	0	15
02:15 PM	0	8	0	0	8	0	0	0	0	0	0	7	0	0	7	1	0	0	0	1	16
02:30 PM	0	7	0	0	7	0	0	0	0	0	0	11	0	0	11	0	0	0	0	0	18
02:45 PM	0	4	0	0	4	0	0	0	0	0	0	10	0	0	10	1	0	0	0	1	15
Total	0	28	0	0	28	0	0	0	0	0	1	33	0	0	34	2	0	0	0	2	64
03:00 PM	0	7	2	0	9	0	0	0	0	0	0	8	0	0	8	0	0	0	0	0	17
03:15 PM	0	14	0	0	14	0	0	0	0	0	0	17	0	0	17	0	0	0	0	0	31
03:30 PM	0	9	0	0	9	0	0	0	0	0	0	16	0	0	16	0	0	0	0	0	25

DocuSign Envelope ID: 5C03745C-4B01-4834-A65D-B77F558A4F46

Quality Counts

920 Blairhill Rd, Ste B-106
Charlotte, NC 28217

File Name : 15411709 - Brevard Rd -- Blue Ridge Pkwy
Site Code : 15411709
Start Date : 4/20/2021

Groups Printed- Classes 4, 5, 6, 7

	Brevard Rd Southbound					Westbound					Brevard Rd Northbound					Blue Ridge Pkwy Eastbound					
Start Time	Left	Thru	Right	U-Turn	App. Total	Left	Thru	Right	U-Turn	App. Total	Left	Thru	Right	U-Turn	App. Total	Left	Thru	Right	U-Turn	App. Total	Int. Total
03:45 PM	0	14	0	0	14	0	0	0	0	0	0	12	0	0	12	0	0	0	0	0	26
Total	0	44	2	0	46	0	0	0	0	0	0	53	0	0	53	0	0	0	0	0	99
04:00 PM	0	10	0	0	10	0	0	0	0	0	0	12	0	0	12	0	0	0	0	0	22
04:15 PM	0	10	0	0	10	0	0	0	0	0	0	11	0	0	11	0	0	0	0	0	21
04:30 PM	0	8	0	0	8	0	0	0	0	0	0	16	0	0	16	1	0	0	0	1	25
04:45 PM	0	3	0	0	3	0	0	0	0	0	0	7	0	0	7	2	0	0	0	2	12
Total	0	31	0	0	31	0	0	0	0	0	0	46	0	0	46	3	0	0	0	3	80
05:00 PM	0	5	0	0	5	0	0	0	0	0	0	17	0	0	17	0	0	0	0	0	22
05:15 PM	0	4	0	0	4	0	0	0	0	0	0	12	0	0	12	0	0	0	0	0	16
05:30 PM	0	2	0	0	2	0	0	0	0	0	1	8	0	0	9	0	0	0	0	0	11
05:45 PM	0	4	0	0	4	0	0	0	0	0	0	3	0	0	3	0	0	0	0	0	7
Total	0	15	0	0	15	0	0	0	0	0	1	40	0	0	41	0	0	0	0	0	56
06:00 PM	0	6	0	0	6	0	0	0	0	0	0	8	0	0	8	0	0	0	0	0	14
06:15 PM	0	4	0	0	4	0	0	0	0	0	0	4	0	0	4	0	0	0	0	0	8
06:30 PM	0	3	0	0	3	0	0	0	0	0	0	2	0	0	2	0	0	0	0	0	5
06:45 PM	0	1	0	0	1	0	0	0	0	0	0	5	0	0	5	0	0	0	0	0	6
Total	0	14	0	0	14	0	0	0	0	0	0	19	0	0	19	0	0	0	0	0	33
Grand Total	0	357	5	0	362	0	0	0	0	0	10	447	0	0	457	9	0	4	0	13	832
Apprch %	0	98.6	1.4	0		0	0	0	0		2.2	97.8	0	0		69.2	0	30.8	0		
Total %	0	42.9	0.6	0	43.5	0	0	0	0	0	1.2	53.7	0	0	54.9	1.1	0	0.5	0	1.6	

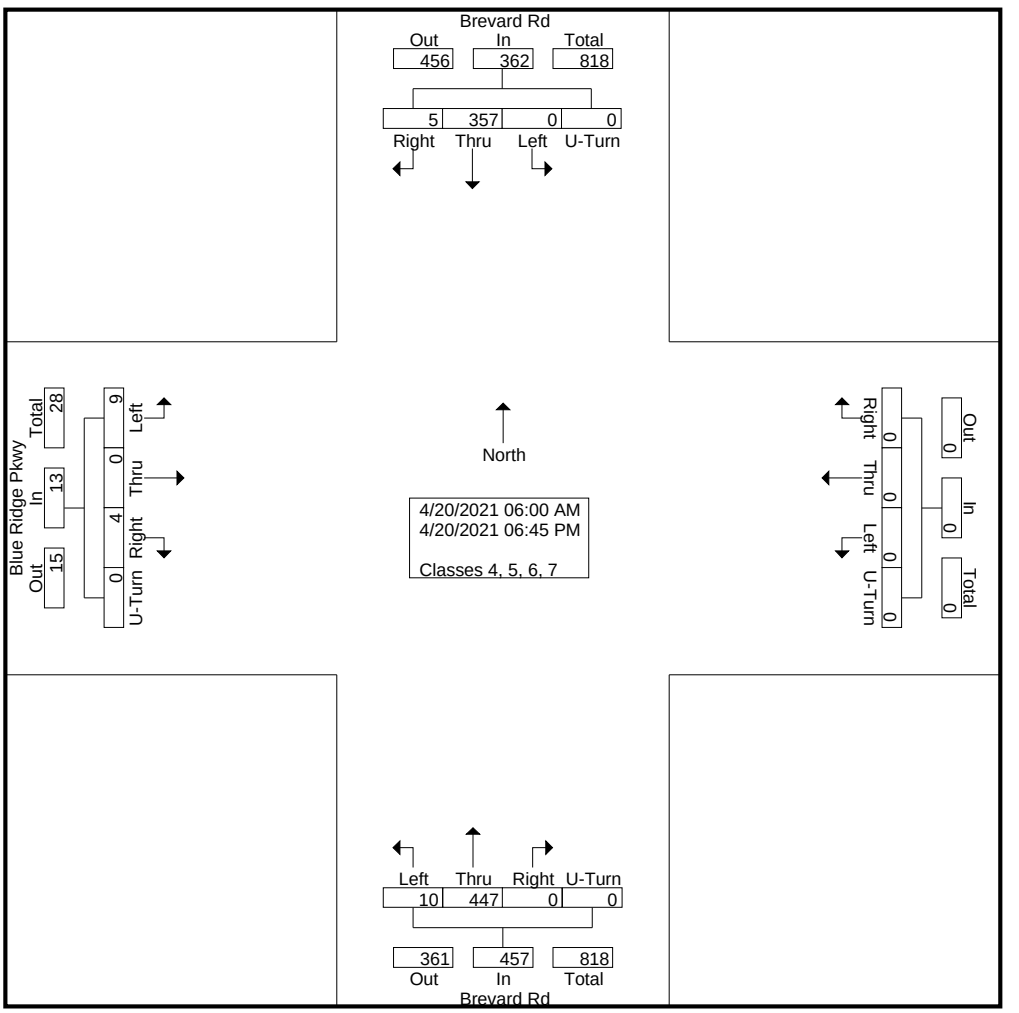

DocuSign Envelope ID: 5C03745C-4B01-4834-A65D-B77F558A4F46

Quality Counts

920 Blairhill Rd, Ste B-106
Charlotte, NC 28217

File Name : 15411709 - Brevard Rd -- Blue Ridge Pkwy
Site Code : 15411709
Start Date : 4/20/2021
Page No : 3

	Brevard Rd Southbound					Westbound					Brevard Rd Northbound					Blue Ridge Pkwy Eastbound					
Start Time	Left	Thru	Right	U-Turn	App. Total	Left	Thru	Right	U-Turn	App. Total	Left	Thru	Right	U-Turn	App. Total	Left	Thru	Right	U-Turn	App. Total	Int. Total
Peak Hour Analysis From 06:00 AM to 11:45 AM - Peak 1 of 1																					
Peak Hour for Entire Intersection Begins at 10:45 AM																					
10:45 AM	0	8	0	0	8	0	0	0	0	0	**1**	**17**	0	0	**18**	0	0	0	0	0	**26**
11:00 AM	0	**11**	0	0	**11**	0	0	0	0	0	1	10	0	0	11	0	0	**1**	0	**1**	23
11:15 AM	0	11	0	0	11	0	0	0	0	0	0	8	0	0	8	**1**	0	0	0	1	20
11:30 AM	0	8	0	0	8	0	0	0	0	0	0	11	0	0	11	0	0	0	0	0	19
Total Volume	0	38	0	0	38	0	0	0	0	0	2	46	0	0	48	1	0	1	0	2	88
% App. Total	0	100	0	0		0	0	0	0		4.2	95.8	0	0		50	0	50	0		
PHF	.000	.864	.000	.000	.864	.000	.000	.000	.000	.000	.500	.676	.000	.000	.667	.250	.000	.250	.000	.500	.846

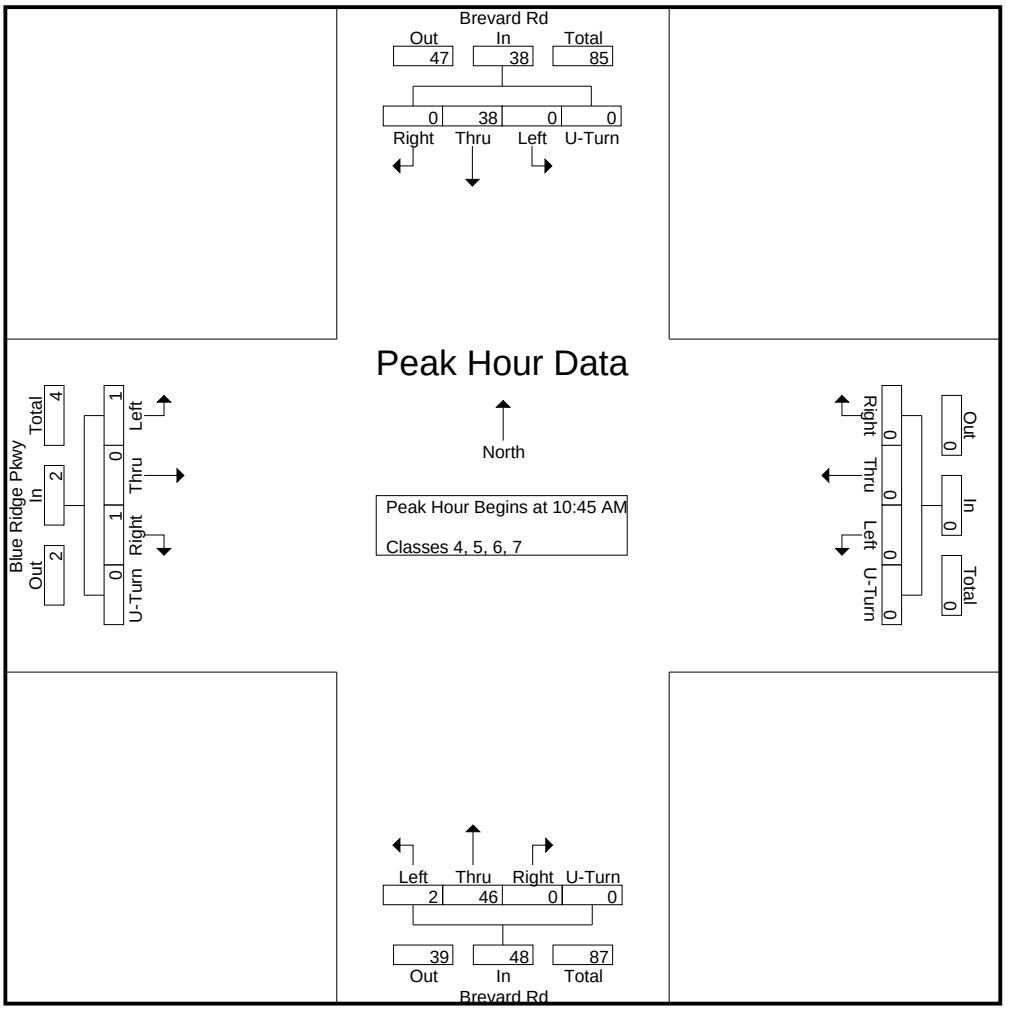

DocuSign Envelope ID: 5C03745C-4B01-4834-A65D-B77F558A4F46

Quality Counts

920 Blairhill Rd, Ste B-106
Charlotte, NC 28217

File Name : 15411709 - Brevard Rd -- Blue Ridge Pkwy
Site Code : 15411709
Start Date : 4/20/2021
Page No : 4

	Brevard Rd Southbound					Westbound					Brevard Rd Northbound					Blue Ridge Pkwy Eastbound					
Start Time	Left	Thru	Right	U-Turn	App. Total	Left	Thru	Right	U-Turn	App. Total	Left	Thru	Right	U-Turn	App. Total	Left	Thru	Right	U-Turn	App. Total	Int. Total
Peak Hour Analysis From 12:00 PM to 06:45 PM - Peak 1 of 1																					
Peak Hour for Entire Intersection Begins at 03:15 PM																					
03:15 PM	0	**14**	0	0	**14**	0	0	0	0	0	0	**17**	0	0	**17**	0	0	0	0	0	**31**
03:30 PM	0	9	0	0	9	0	0	0	0	0	0	16	0	0	16	0	0	0	0	0	25
03:45 PM	0	14	0	0	14	0	0	0	0	0	0	12	0	0	12	0	0	0	0	0	26
04:00 PM	0	10	0	0	10	0	0	0	0	0	0	12	0	0	12	0	0	0	0	0	22
Total Volume	0	47	0	0	47	0	0	0	0	0	0	57	0	0	57	0	0	0	0	0	104
% App. Total	0	100	0	0		0	0	0	0		0	100	0	0		0	0	0	0		
PHF	.000	.839	.000	.000	.839	.000	.000	.000	.000	.000	.000	.838	.000	.000	.838	.000	.000	.000	.000	.000	.839

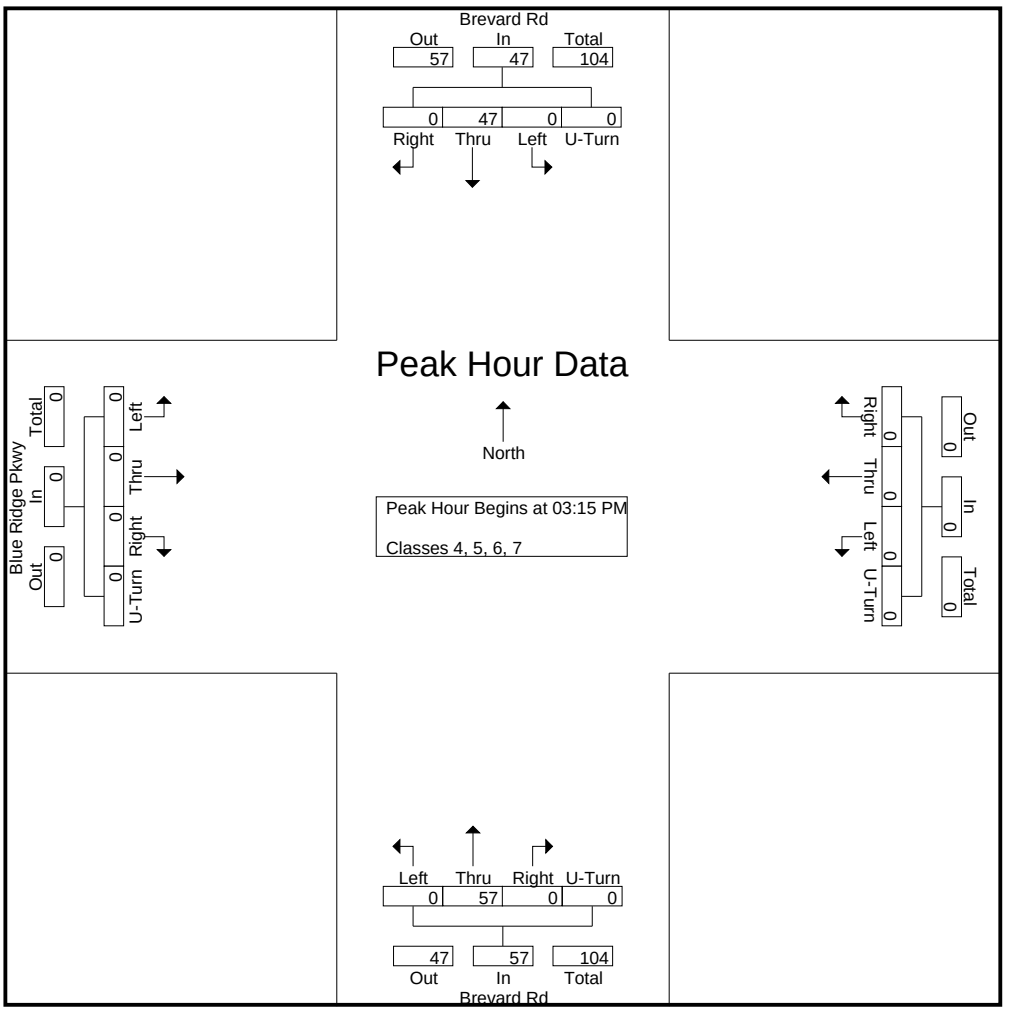

DocuSign Envelope ID: 5C03745C-4B01-4834-A65D-B77F558A4F46

Quality Counts

920 Blairhill Rd, Ste B-106
Charlotte, NC 28217

File Name : 15411709 - Brevard Rd -- Blue Ridge Pkwy
Site Code : 15411709
Start Date : 4/20/2021
Page No : 1

Groups Printed- Classes 8, 9, 10

	Brevard Rd Southbound					Westbound					Brevard Rd Northbound					Blue Ridge Pkwy Eastbound					
Start Time	Left	Thru	Right	U-Turn	App. Total	Left	Thru	Right	U-Turn	App. Total	Left	Thru	Right	U-Turn	App. Total	Left	Thru	Right	U-Turn	App. Total	Int. Total
06:00 AM	0	1	0	0	1	0	0	0	0	0	0	1	0	0	1	0	0	0	0	0	2
06:15 AM	0	0	0	0	0	0	0	0	0	0	0	0	0	0	0	0	0	0	0	0	0
06:30 AM	0	0	0	0	0	0	0	0	0	0	0	0	0	0	0	0	0	0	0	0	0
06:45 AM	0	0	0	0	0	0	0	0	0	0	0	1	0	0	1	0	0	0	0	0	1
Total	0	1	0	0	1	0	0	0	0	0	0	2	0	0	2	0	0	0	0	0	3
07:00 AM	0	2	0	0	2	0	0	0	0	0	0	1	0	0	1	0	0	0	0	0	3
07:15 AM	0	0	0	0	0	0	0	0	0	0	0	1	0	0	1	0	0	0	0	0	1
07:30 AM	0	1	0	0	1	0	0	0	0	0	0	0	0	0	0	0	0	0	0	0	1
07:45 AM	0	3	0	0	3	0	0	0	0	0	0	1	0	0	1	0	0	0	0	0	4
Total	0	6	0	0	6	0	0	0	0	0	0	3	0	0	3	0	0	0	0	0	9
08:00 AM	0	0	0	0	0	0	0	0	0	0	0	4	0	0	4	0	0	0	0	0	4
08:15 AM	0	2	0	0	2	0	0	0	0	0	0	1	0	0	1	0	0	0	0	0	3
08:30 AM	0	2	0	0	2	0	0	0	0	0	0	1	0	0	1	0	0	0	0	0	3
08:45 AM	0	1	0	0	1	0	0	0	0	0	0	1	0	0	1	0	0	0	0	0	2
Total	0	5	0	0	5	0	0	0	0	0	0	7	0	0	7	0	0	0	0	0	12
09:00 AM	0	2	0	0	2	0	0	0	0	0	0	2	0	0	2	0	0	0	0	0	4
09:15 AM	0	4	0	0	4	0	0	0	0	0	0	2	0	0	2	0	0	0	0	0	6
09:30 AM	0	1	0	0	1	0	0	0	0	0	0	3	0	0	3	0	0	0	0	0	4
09:45 AM	0	1	0	0	1	0	0	0	0	0	0	2	0	0	2	0	0	0	0	0	3
Total	0	8	0	0	8	0	0	0	0	0	0	9	0	0	9	0	0	0	0	0	17
10:00 AM	0	4	0	0	4	0	0	0	0	0	0	4	0	0	4	0	0	0	0	0	8
10:15 AM	0	1	0	0	1	0	0	0	0	0	0	1	0	0	1	0	0	0	0	0	2
10:30 AM	0	4	0	0	4	0	0	0	0	0	0	3	0	0	3	0	0	0	0	0	7
10:45 AM	0	2	0	0	2	0	0	0	0	0	0	0	0	0	0	0	0	0	0	0	2
Total	0	11	0	0	11	0	0	0	0	0	0	8	0	0	8	0	0	0	0	0	19
11:00 AM	0	1	0	0	1	0	0	0	0	0	0	4	0	0	4	0	0	0	0	0	5
11:15 AM	0	1	0	0	1	0	0	0	0	0	0	2	0	0	2	0	0	0	0	0	3
11:30 AM	0	0	0	0	0	0	0	0	0	0	0	3	0	0	3	0	0	0	0	0	3
11:45 AM	0	0	0	0	0	0	0	0	0	0	0	3	0	0	3	0	0	0	0	0	3
Total	0	2	0	0	2	0	0	0	0	0	0	12	0	0	12	0	0	0	0	0	14
12:00 PM	0	1	0	0	1	0	0	0	0	0	0	2	0	0	2	0	0	0	0	0	3
12:15 PM	0	2	0	0	2	0	0	0	0	0	0	2	0	0	2	0	0	0	0	0	4
12:30 PM	0	1	0	0	1	0	0	0	0	0	0	3	0	0	3	0	0	0	0	0	4
12:45 PM	0	4	0	0	4	0	0	0	0	0	0	3	0	0	3	0	0	0	0	0	7
Total	0	8	0	0	8	0	0	0	0	0	0	10	0	0	10	0	0	0	0	0	18
01:00 PM	0	0	0	0	0	0	0	0	0	0	0	3	0	0	3	0	0	0	0	0	3
01:15 PM	0	0	0	0	0	0	0	0	0	0	0	0	0	0	0	0	0	0	0	0	0
01:30 PM	0	2	0	0	2	0	0	0	0	0	0	2	0	0	2	0	0	0	0	0	4
01:45 PM	0	0	0	0	0	0	0	0	0	0	0	0	0	0	0	0	0	0	0	0	0
Total	0	2	0	0	2	0	0	0	0	0	0	5	0	0	5	0	0	0	0	0	7
02:00 PM	0	2	0	0	2	0	0	0	0	0	0	2	0	0	2	0	0	0	0	0	4
02:15 PM	0	1	0	0	1	0	0	0	0	0	0	0	0	0	0	0	0	0	0	0	1
02:30 PM	0	4	0	0	4	0	0	0	0	0	0	4	0	0	4	0	0	0	0	0	8
02:45 PM	0	1	0	0	1	0	0	0	0	0	0	2	0	0	2	0	0	0	0	0	3
Total	0	8	0	0	8	0	0	0	0	0	0	8	0	0	8	0	0	0	0	0	16
03:00 PM	0	1	0	0	1	0	0	0	0	0	0	1	0	0	1	0	0	0	0	0	2
03:15 PM	0	2	0	0	2	0	0	0	0	0	0	4	0	0	4	0	0	0	0	0	6
03:30 PM	0	2	0	0	2	0	0	0	0	0	0	2	0	0	2	0	0	0	0	0	4

DocuSign Envelope ID: 5C03745C-4B01-4834-A65D-B77F558A4F46

Quality Counts

920 Blairhill Rd, Ste B-106
Charlotte, NC 28217

File Name : 15411709 - Brevard Rd -- Blue Ridge Pkwy
Site Code : 15411709
Start Date : 4/20/2021
Page No : 2

Groups Printed- Classes 8, 9, 10

	Brevard Rd Southbound					Westbound					Brevard Rd Northbound					Blue Ridge Pkwy Eastbound					
Start Time	Left	Thru	Right	U-Turn	App. Total	Left	Thru	Right	U-Turn	App. Total	Left	Thru	Right	U-Turn	App. Total	Left	Thru	Right	U-Turn	App. Total	Int. Total
03:45 PM	0	0	0	0	0	0	0	0	0	0	0	1	0	0	1	0	0	0	0	0	1
Total	0	5	0	0	5	0	0	0	0	0	0	8	0	0	8	0	0	0	0	0	13
04:00 PM	0	1	0	0	1	0	0	0	0	0	0	0	0	0	0	0	0	0	0	0	1
04:15 PM	0	1	0	0	1	0	0	0	0	0	0	3	0	0	3	0	0	0	0	0	4
04:30 PM	0	1	0	0	1	0	0	0	0	0	0	0	0	0	0	0	0	0	0	0	1
04:45 PM	0	0	0	0	0	0	0	0	0	0	0	3	0	0	3	0	0	0	0	0	3
Total	0	3	0	0	3	0	0	0	0	0	0	6	0	0	6	0	0	0	0	0	9
05:00 PM	0	1	0	0	1	0	0	0	0	0	0	0	0	0	0	0	0	0	0	0	1
05:15 PM	0	2	0	0	2	0	0	0	0	0	0	1	0	0	1	0	0	0	0	0	3
05:30 PM	0	0	0	0	0	0	0	0	0	0	0	2	0	0	2	0	0	0	0	0	2
05:45 PM	0	2	0	0	2	0	0	0	0	0	0	2	0	0	2	0	0	0	0	0	4
Total	0	5	0	0	5	0	0	0	0	0	0	5	0	0	5	0	0	0	0	0	10
06:00 PM	0	0	0	0	0	0	0	0	0	0	0	0	0	0	0	0	0	0	0	0	0
06:15 PM	0	0	0	0	0	0	0	0	0	0	0	1	0	0	1	0	0	0	0	0	1
06:30 PM	0	0	0	0	0	0	0	0	0	0	0	0	0	0	0	0	0	0	0	0	0
06:45 PM	0	1	0	0	1	0	0	0	0	0	0	0	0	0	0	0	0	0	0	0	1
Total	0	1	0	0	1	0	0	0	0	0	0	1	0	0	1	0	0	0	0	0	2
Grand Total	0	65	0	0	65	0	0	0	0	0	0	84	0	0	84	0	0	0	0	0	149
Apprch %	0	100	0	0		0	0	0	0		0	100	0	0		0	0	0	0		
Total %	0	43.6	0	0	43.6	0	0	0	0	0	0	56.4	0	0	56.4	0	0	0	0	0	

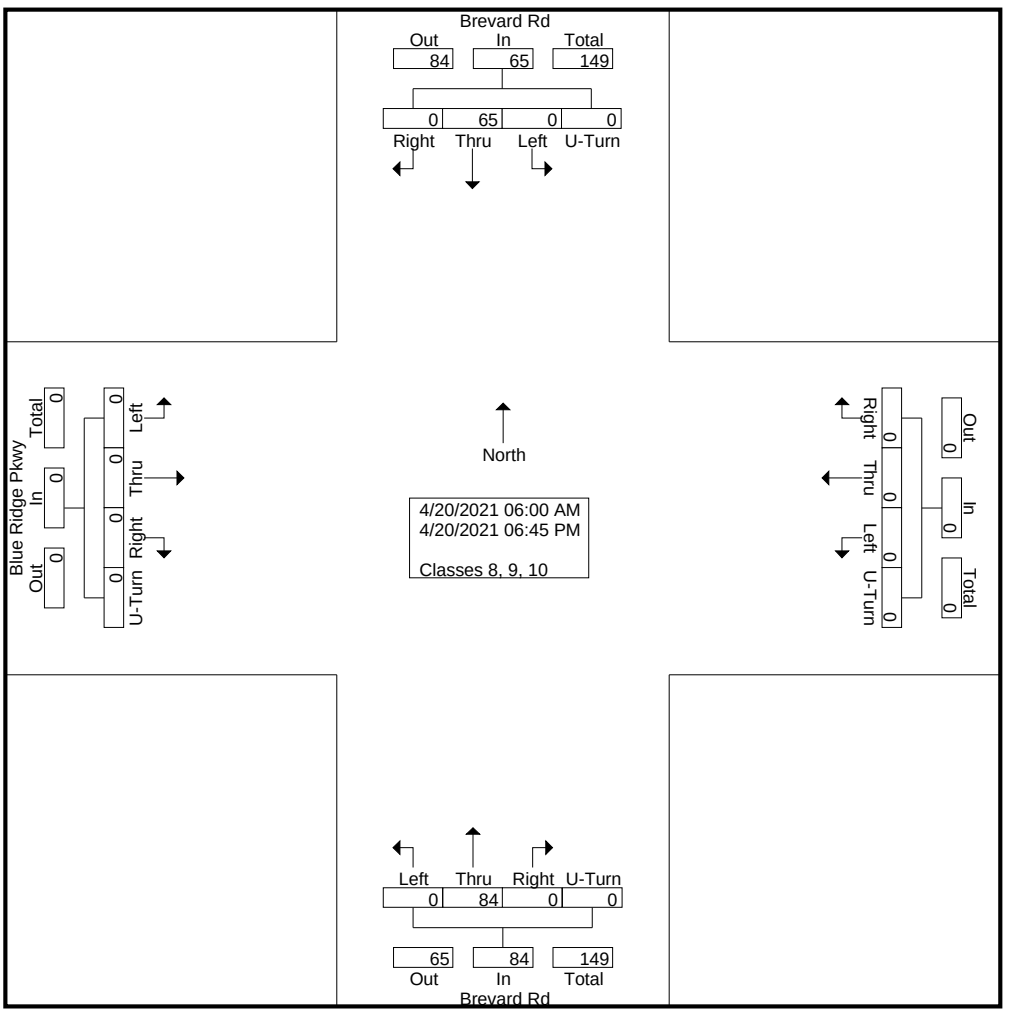

DocuSign Envelope ID: 5C03745C-4B01-4834-A65D-B77F558A4F46

Quality Counts

920 Blairhill Rd, Ste B-106
Charlotte, NC 28217

File Name : 15411709 - Brevard Rd -- Blue Ridge Pkwy
Site Code : 15411709
Start Date : 4/20/2021

	Brevard Rd Southbound					Westbound					Brevard Rd Northbound					Blue Ridge Pkwy Eastbound					
Start Time	Left	Thru	Right	U-Turn	App. Total	Left	Thru	Right	U-Turn	App. Total	Left	Thru	Right	U-Turn	App. Total	Left	Thru	Right	U-Turn	App. Total	Int. Total
Peak Hour Analysis From 06:00 AM to 11:45 AM - Peak 1 of 1																					
Peak Hour for Entire Intersection Begins at 09:15 AM																					
09:15 AM	0	**4**	0	0	**4**	0	0	0	0	0	0	2	0	0	2	0	0	0	0	0	6
09:30 AM	0	1	0	0	1	0	0	0	0	0	0	3	0	0	3	0	0	0	0	0	4
09:45 AM	0	1	0	0	1	0	0	0	0	0	0	2	0	0	2	0	0	0	0	0	3
10:00 AM	0	4	0	0	4	0	0	0	0	0	0	**4**	0	0	**4**	0	0	0	0	0	**8**
Total Volume	0	10	0	0	10	0	0	0	0	0	0	11	0	0	11	0	0	0	0	0	21
% App. Total	0	100	0	0		0	0	0	0		0	100	0	0		0	0	0	0		
PHF	.000	.625	.000	.000	.625	.000	.000	.000	.000	.000	.000	.688	.000	.000	.688	.000	.000	.000	.000	.000	.656

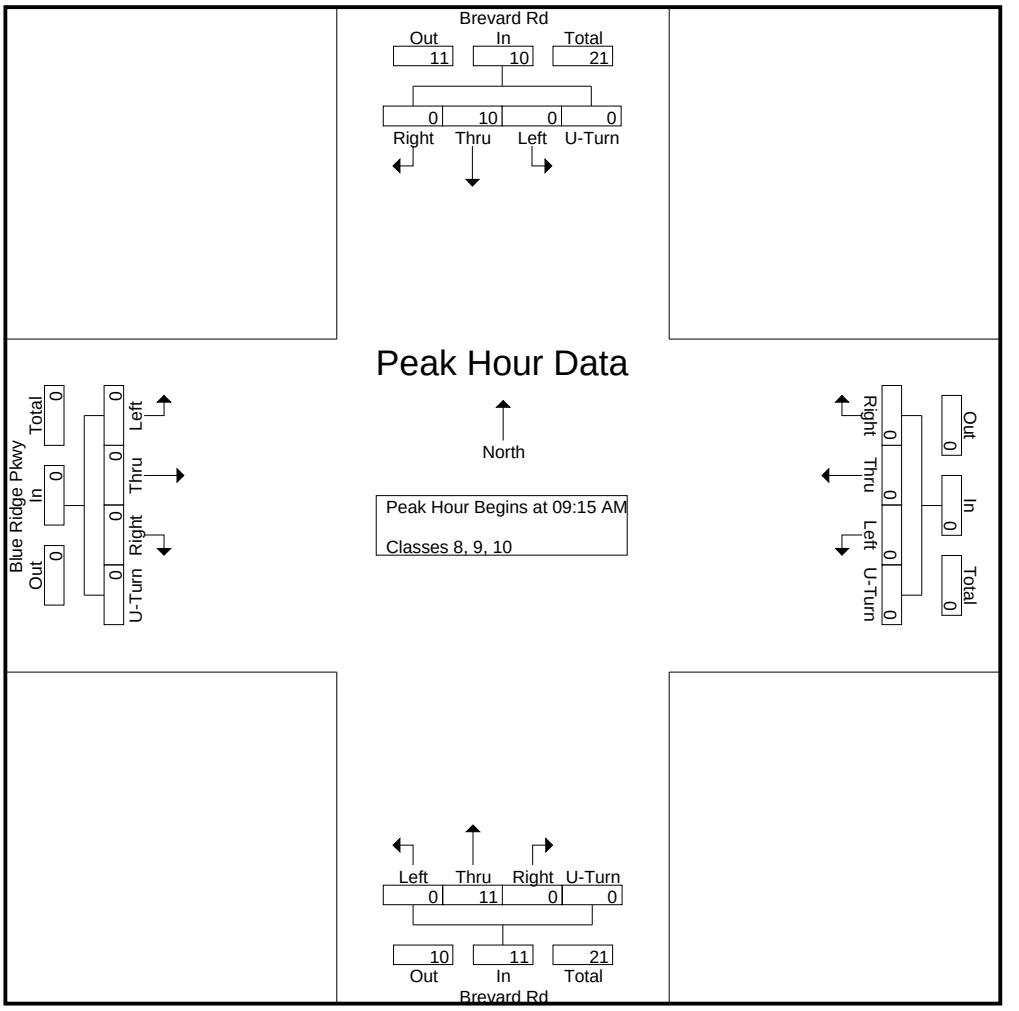

DocuSign Envelope ID: 5C03745C-4B01-4834-A65D-B77F558A4F46

Quality Counts

920 Blairhill Rd, Ste B-106
Charlotte, NC 28217

File Name : 15411709 - Brevard Rd -- Blue Ridge Pkwy
Site Code : 15411709
Start Date : 4/20/2021
Page No : 4

	Brevard Rd Southbound					Westbound					Brevard Rd Northbound					Blue Ridge Pkwy Eastbound					
Start Time	Left	Thru	Right	U-Turn	App. Total	Left	Thru	Right	U-Turn	App. Total	Left	Thru	Right	U-Turn	App. Total	Left	Thru	Right	U-Turn	App. Total	Int. Total
Peak Hour Analysis From 12:00 PM to 06:45 PM - Peak 1 of 1																					
Peak Hour for Entire Intersection Begins at 02:30 PM																					
02:30 PM	0	**4**	0	0	**4**	0	0	0	0	0	0	**4**	0	0	**4**	0	0	0	0	0	**8**
02:45 PM	0	1	0	0	1	0	0	0	0	0	0	2	0	0	2	0	0	0	0	0	3
03:00 PM	0	1	0	0	1	0	0	0	0	0	0	1	0	0	1	0	0	0	0	0	2
03:15 PM	0	2	0	0	2	0	0	0	0	0	0	4	0	0	4	0	0	0	0	0	6
Total Volume	0	8	0	0	8	0	0	0	0	0	0	11	0	0	11	0	0	0	0	0	19
% App. Total	0	100	0	0		0	0	0	0		0	100	0	0		0	0	0	0		
PHF	.000	.500	.000	.000	.500	.000	.000	.000	.000	.000	.000	.688	.000	.000	.688	.000	.000	.000	.000	.000	.594

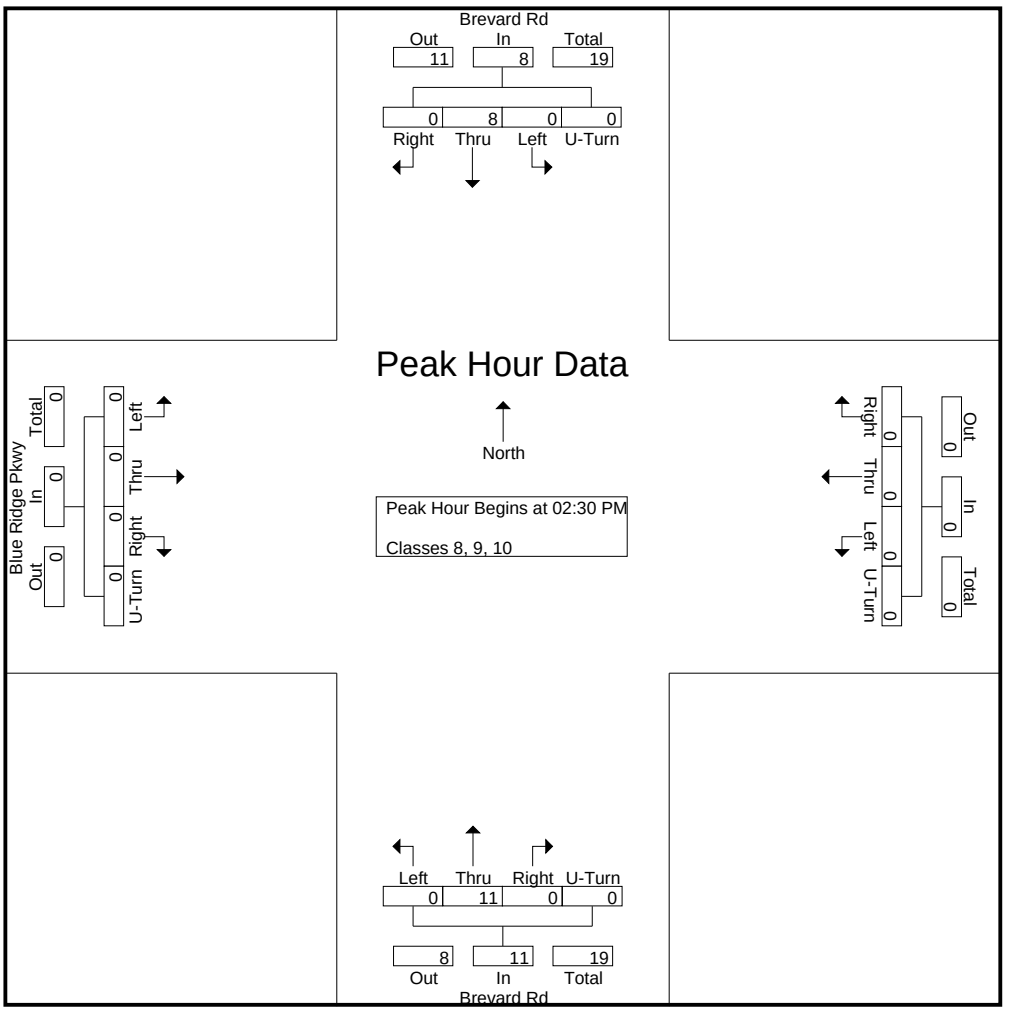

DocuSign Envelope ID: 5C03745C-4B01-4834-A65D-B77F558A4F46

Quality Counts

920 Blairhill Rd, Ste B-106
Charlotte, NC 28217

File Name : 15411709 - Brevard Rd -- Blue Ridge Pkwy
Site Code : 15411709
Start Date : 4/20/2021
Page No : 1

Groups Printed- Classes 11, 12, 13

	Brevard Rd Southbound					Westbound					Brevard Rd Northbound					Blue Ridge Pkwy Eastbound					
Start Time	Left	Thru	Right	U-Turn	App. Total	Left	Thru	Right	U-Turn	App. Total	Left	Thru	Right	U-Turn	App. Total	Left	Thru	Right	U-Turn	App. Total	Int. Total
06:00 AM	0	0	0	0	0	0	0	0	0	0	0	0	0	0	0	0	0	0	0	0	0
06:15 AM	0	0	0	0	0	0	0	0	0	0	0	0	0	0	0	0	0	0	0	0	0
06:30 AM	0	0	0	0	0	0	0	0	0	0	0	0	0	0	0	0	0	0	0	0	0
06:45 AM	0	0	0	0	0	0	0	0	0	0	0	0	0	0	0	0	0	0	0	0	0
Total	0	0	0	0	0	0	0	0	0	0	0	0	0	0	0	0	0	0	0	0	0
07:00 AM	0	0	0	0	0	0	0	0	0	0	0	0	0	0	0	0	0	0	0	0	0
07:15 AM	0	0	0	0	0	0	0	0	0	0	0	0	0	0	0	0	0	0	0	0	0
07:30 AM	0	0	0	0	0	0	0	0	0	0	0	0	0	0	0	0	0	0	0	0	0
07:45 AM	0	0	0	0	0	0	0	0	0	0	0	0	0	0	0	0	0	0	0	0	0
Total	0	0	0	0	0	0	0	0	0	0	0	0	0	0	0	0	0	0	0	0	0
08:00 AM	0	0	0	0	0	0	0	0	0	0	0	0	0	0	0	0	0	0	0	0	0
08:15 AM	0	0	0	0	0	0	0	0	0	0	0	0	0	0	0	0	0	0	0	0	0
08:30 AM	0	0	0	0	0	0	0	0	0	0	0	0	0	0	0	0	0	0	0	0	0
08:45 AM	0	0	0	0	0	0	0	0	0	0	0	0	0	0	0	0	0	0	0	0	0
Total	0	0	0	0	0	0	0	0	0	0	0	0	0	0	0	0	0	0	0	0	0
09:00 AM	0	0	0	0	0	0	0	0	0	0	0	0	0	0	0	0	0	0	0	0	0
09:15 AM	0	0	0	0	0	0	0	0	0	0	0	0	0	0	0	0	0	0	0	0	0
09:30 AM	0	0	0	0	0	0	0	0	0	0	0	0	0	0	0	0	0	0	0	0	0
09:45 AM	0	0	0	0	0	0	0	0	0	0	0	0	0	0	0	0	0	0	0	0	0
Total	0	0	0	0	0	0	0	0	0	0	0	0	0	0	0	0	0	0	0	0	0
10:00 AM	0	0	0	0	0	0	0	0	0	0	0	0	0	0	0	0	0	0	0	0	0
10:15 AM	0	0	0	0	0	0	0	0	0	0	0	0	0	0	0	0	0	0	0	0	0
10:30 AM	0	0	0	0	0	0	0	0	0	0	0	0	0	0	0	0	0	0	0	0	0
10:45 AM	0	0	0	0	0	0	0	0	0	0	0	0	0	0	0	0	0	0	0	0	0
Total	0	0	0	0	0	0	0	0	0	0	0	0	0	0	0	0	0	0	0	0	0
11:00 AM	0	0	0	0	0	0	0	0	0	0	0	0	0	0	0	0	0	0	0	0	0
11:15 AM	0	0	0	0	0	0	0	0	0	0	0	0	0	0	0	0	0	0	0	0	0
11:30 AM	0	0	0	0	0	0	0	0	0	0	0	0	0	0	0	0	0	0	0	0	0
11:45 AM	0	0	0	0	0	0	0	0	0	0	0	0	0	0	0	0	0	0	0	0	0
Total	0	0	0	0	0	0	0	0	0	0	0	0	0	0	0	0	0	0	0	0	0
12:00 PM	0	0	0	0	0	0	0	0	0	0	0	0	0	0	0	0	0	0	0	0	0
12:15 PM	0	0	0	0	0	0	0	0	0	0	0	0	0	0	0	0	0	0	0	0	0
12:30 PM	0	0	0	0	0	0	0	0	0	0	0	0	0	0	0	0	0	0	0	0	0
12:45 PM	0	0	0	0	0	0	0	0	0	0	0	0	0	0	0	0	0	0	0	0	0
Total	0	0	0	0	0	0	0	0	0	0	0	0	0	0	0	0	0	0	0	0	0
01:00 PM	0	0	0	0	0	0	0	0	0	0	0	0	0	0	0	0	0	0	0	0	0
01:15 PM	0	0	0	0	0	0	0	0	0	0	0	0	0	0	0	0	0	0	0	0	0
01:30 PM	0	0	0	0	0	0	0	0	0	0	0	0	0	0	0	0	0	0	0	0	0
01:45 PM	0	0	0	0	0	0	0	0	0	0	0	0	0	0	0	0	0	0	0	0	0
Total	0	0	0	0	0	0	0	0	0	0	0	0	0	0	0	0	0	0	0	0	0
02:00 PM	0	0	0	0	0	0	0	0	0	0	0	0	0	0	0	0	0	0	0	0	0
02:15 PM	0	0	0	0	0	0	0	0	0	0	0	0	0	0	0	0	0	0	0	0	0
02:30 PM	0	0	0	0	0	0	0	0	0	0	0	0	0	0	0	0	0	0	0	0	0
02:45 PM	0	0	0	0	0	0	0	0	0	0	0	0	0	0	0	0	0	0	0	0	0
Total	0	0	0	0	0	0	0	0	0	0	0	0	0	0	0	0	0	0	0	0	0
03:00 PM	0	0	0	0	0	0	0	0	0	0	0	0	0	0	0	0	0	0	0	0	0
03:15 PM	0	0	0	0	0	0	0	0	0	0	0	0	0	0	0	0	0	0	0	0	0
03:30 PM	0	0	0	0	0	0	0	0	0	0	0	0	0	0	0	0	0	0	0	0	0

DocuSign Envelope ID: 5C03745C-4B01-4834-A65D-B77F558A4F46

Quality Counts

920 Blairhill Rd, Ste B-106
Charlotte, NC 28217

File Name : 15411709 - Brevard Rd -- Blue Ridge Pkwy
Site Code : 15411709
Start Date : 4/20/2021

Groups Printed- Classes 11, 12, 13

	Brevard Rd Southbound					Westbound					Brevard Rd Northbound					Blue Ridge Pkwy Eastbound					
Start Time	Left	Thru	Right	U-Turn	App. Total	Left	Thru	Right	U-Turn	App. Total	Left	Thru	Right	U-Turn	App. Total	Left	Thru	Right	U-Turn	App. Total	Int. Total
03:45 PM	0	0	0	0	0	0	0	0	0	0	0	0	0	0	0	0	0	0	0	0	0
Total	0	0	0	0	0	0	0	0	0	0	0	0	0	0	0	0	0	0	0	0	0
04:00 PM	0	0	0	0	0	0	0	0	0	0	0	0	0	0	0	0	0	0	0	0	0
04:15 PM	0	0	0	0	0	0	0	0	0	0	0	0	0	0	0	0	0	0	0	0	0
04:30 PM	0	0	0	0	0	0	0	0	0	0	0	0	0	0	0	0	0	0	0	0	0
04:45 PM	0	0	0	0	0	0	0	0	0	0	0	0	0	0	0	0	0	0	0	0	0
Total	0	0	0	0	0	0	0	0	0	0	0	0	0	0	0	0	0	0	0	0	0
05:00 PM	0	0	0	0	0	0	0	0	0	0	0	0	0	0	0	0	0	0	0	0	0
05:15 PM	0	0	0	0	0	0	0	0	0	0	0	0	0	0	0	0	0	0	0	0	0
05:30 PM	0	0	0	0	0	0	0	0	0	0	0	0	0	0	0	0	0	0	0	0	0
05:45 PM	0	0	0	0	0	0	0	0	0	0	0	0	0	0	0	0	0	0	0	0	0
Total	0	0	0	0	0	0	0	0	0	0	0	0	0	0	0	0	0	0	0	0	0
06:00 PM	0	0	0	0	0	0	0	0	0	0	0	0	0	0	0	0	0	0	0	0	0
06:15 PM	0	0	0	0	0	0	0	0	0	0	0	0	0	0	0	0	0	0	0	0	0
06:30 PM	0	0	0	0	0	0	0	0	0	0	0	0	0	0	0	0	0	0	0	0	0
06:45 PM	0	0	0	0	0	0	0	0	0	0	0	0	0	0	0	0	0	0	0	0	0
Total	0	0	0	0	0	0	0	0	0	0	0	0	0	0	0	0	0	0	0	0	0
Grand Total	0	0	0	0	0	0	0	0	0	0	0	0	0	0	0	0	0	0	0	0	0
Apprch %	0	0	0	0		0	0	0	0		0	0	0	0		0	0	0	0		
Total %																					

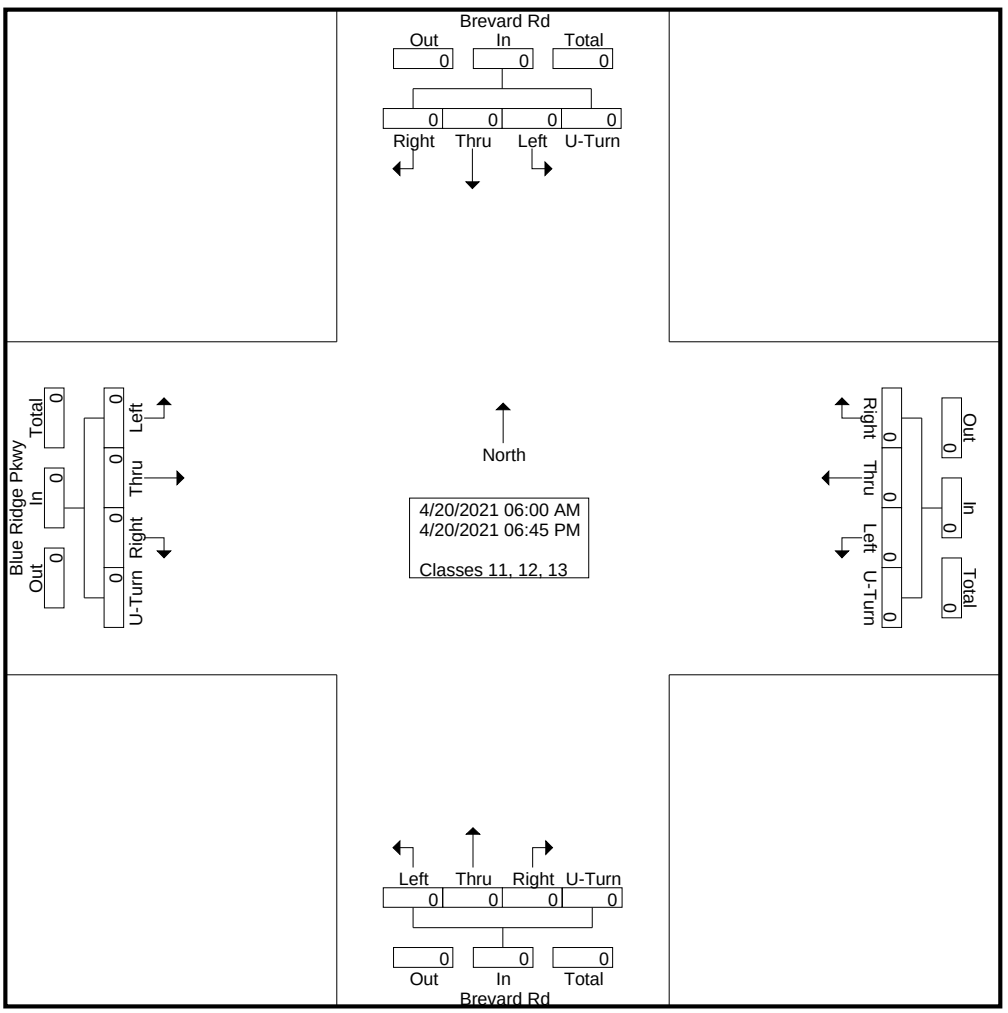

DocuSign Envelope ID: 5C03745C-4B01-4834-A65D-B77F558A4F46

Quality Counts

920 Blairhill Rd, Ste B-106
Charlotte, NC 28217

File Name : 15411709 - Brevard Rd -- Blue Ridge Pkwy
Site Code : 15411709
Start Date : 4/20/2021
Page No : 3

	Brevard Rd Southbound					Westbound					Brevard Rd Northbound					Blue Ridge Pkwy Eastbound					
Start Time	Left	Thru	Right	U-Turn	App. Total	Left	Thru	Right	U-Turn	App. Total	Left	Thru	Right	U-Turn	App. Total	Left	Thru	Right	U-Turn	App. Total	Int. Total
Peak Hour Analysis From 06:00 AM to 11:45 AM - Peak 1 of 1																					
Peak Hour for Entire Intersection Begins at 06:00 AM																					
06:00 AM	0	0	0	0	0	0	0	0	0	0	0	0	0	0	0	0	0	0	0	0	0
06:15 AM	0	0	0	0	0	0	0	0	0	0	0	0	0	0	0	0	0	0	0	0	0
06:30 AM	0	0	0	0	0	0	0	0	0	0	0	0	0	0	0	0	0	0	0	0	0
06:45 AM	0	0	0	0	0	0	0	0	0	0	0	0	0	0	0	0	0	0	0	0	0
Total Volume	0	0	0	0	0	0	0	0	0	0	0	0	0	0	0	0	0	0	0	0	0
% App. Total	0	0	0	0		0	0	0	0		0	0	0	0		0	0	0	0		
PHF	.000	.000	.000	.000	.000	.000	.000	.000	.000	.000	.000	.000	.000	.000	.000	.000	.000	.000	.000	.000	.000

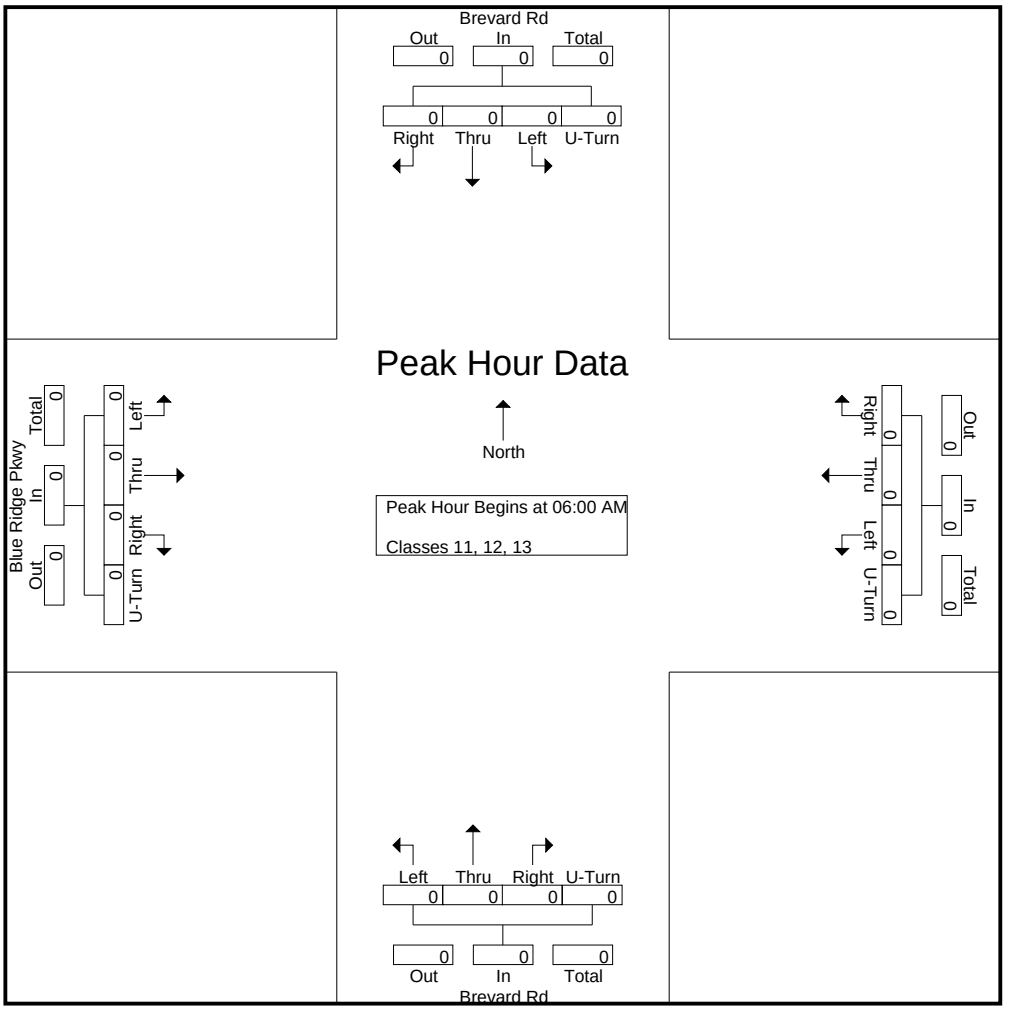

DocuSign Envelope ID: 5C03745C-4B01-4834-A65D-B77F558A4F46

Quality Counts

920 Blairhill Rd, Ste B-106
Charlotte, NC 28217

File Name : 15411709 - Brevard Rd -- Blue Ridge Pkwy
Site Code : 15411709
Start Date : 4/20/2021
Page No : 4

	Brevard Rd Southbound					Westbound					Brevard Rd Northbound					Blue Ridge Pkwy Eastbound					
Start Time	Left	Thru	Right	U-Turn	App. Total	Left	Thru	Right	U-Turn	App. Total	Left	Thru	Right	U-Turn	App. Total	Left	Thru	Right	U-Turn	App. Total	Int. Total
Peak Hour Analysis From 12:00 PM to 06:45 PM - Peak 1 of 1																					
Peak Hour for Entire Intersection Begins at 12:00 PM																					
12:00 PM	0	0	0	0	0	0	0	0	0	0	0	0	0	0	0	0	0	0	0	0	0
12:15 PM	0	0	0	0	0	0	0	0	0	0	0	0	0	0	0	0	0	0	0	0	0
12:30 PM	0	0	0	0	0	0	0	0	0	0	0	0	0	0	0	0	0	0	0	0	0
12:45 PM	0	0	0	0	0	0	0	0	0	0	0	0	0	0	0	0	0	0	0	0	0
Total Volume	0	0	0	0	0	0	0	0	0	0	0	0	0	0	0	0	0	0	0	0	0
% App. Total	0	0	0	0		0	0	0	0		0	0	0	0		0	0	0	0		
PHF	.000	.000	.000	.000	.000	.000	.000	.000	.000	.000	.000	.000	.000	.000	.000	.000	.000	.000	.000	.000	.000

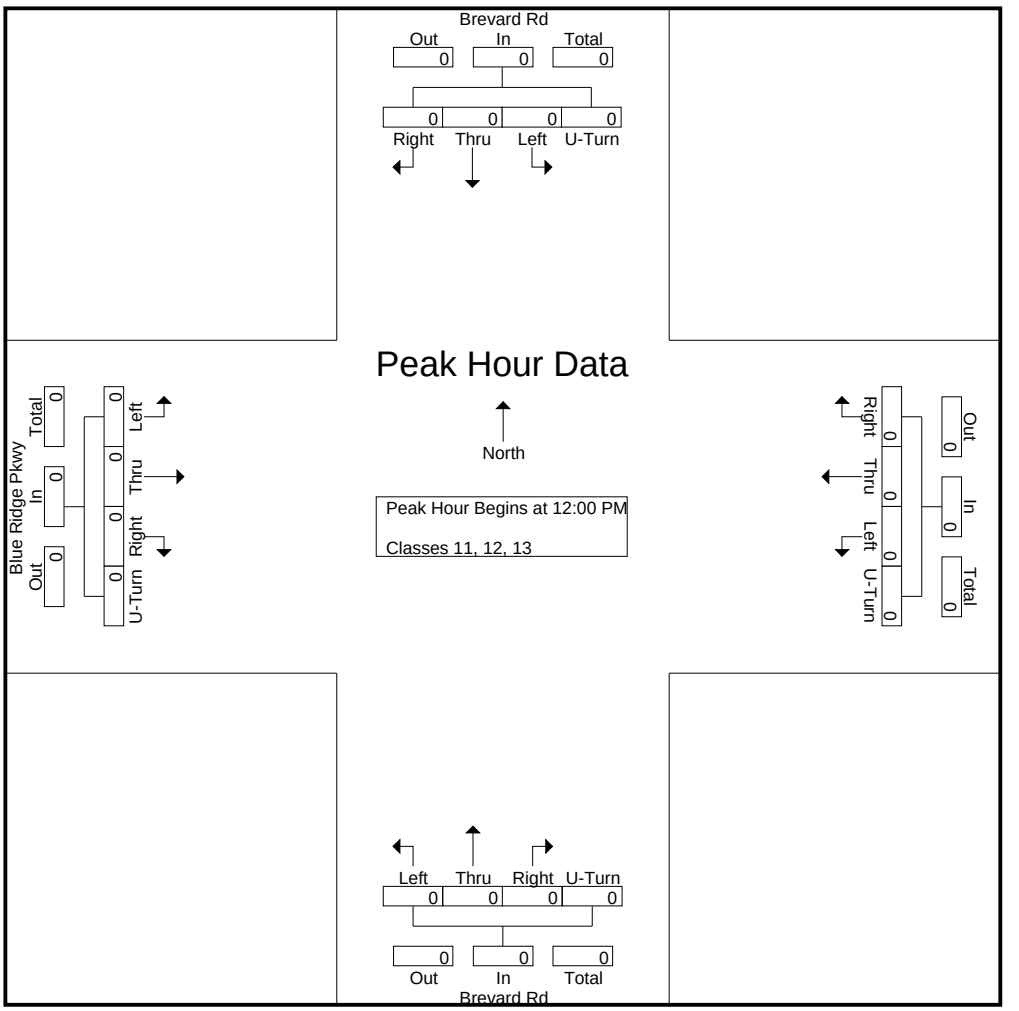

DocuSign Envelope ID: 5C03745C-4B01-4834-A65D-B77F558A4F46

Quality Counts

920 Blairhill Rd, Ste B-106
Charlotte, NC 28217

File Name : 15411709 - Brevard Rd -- Blue Ridge Pkwy
Site Code : 15411709
Start Date : 4/20/2021
Page No : 1

Groups Printed- Bikes, Peds

	Brevard Rd Southbound					Westbound					Brevard Rd Northbound					Blue Ridge Pkwy Eastbound					
Start Time	Left	Thru	Right	Peds	App. Total	Left	Thru	Right	Peds	App. Total	Left	Thru	Right	Peds	App. Total	Left	Thru	Right	Peds	App. Total	Int. Total
06:00 AM	0	0	0	0	0	0	0	0	0	0	0	0	0	0	0	0	0	0	0	0	0
06:15 AM	0	0	0	0	0	0	0	0	0	0	0	0	0	0	0	0	0	0	0	0	0
06:30 AM	0	0	0	0	0	0	0	0	0	0	0	0	0	0	0	0	0	0	0	0	0
06:45 AM	0	0	0	0	0	0	0	0	0	0	0	0	0	0	0	0	0	0	0	0	0
Total	0	0	0	0	0	0	0	0	0	0	0	0	0	0	0	0	0	0	0	0	0
07:00 AM	0	0	0	0	0	0	0	0	0	0	0	0	0	0	0	0	0	0	0	0	0
07:15 AM	0	0	0	0	0	0	0	0	0	0	0	0	0	0	0	0	0	0	0	0	0
07:30 AM	0	0	0	0	0	0	0	0	0	0	0	0	0	0	0	0	0	0	0	0	0
07:45 AM	0	0	0	0	0	0	0	0	0	0	0	0	0	0	0	0	0	0	0	0	0
Total	0	0	0	0	0	0	0	0	0	0	0	0	0	0	0	0	0	0	0	0	0
08:00 AM	0	0	0	0	0	0	0	0	0	0	0	0	0	0	0	0	0	0	0	0	0
08:15 AM	0	0	0	0	0	0	0	0	0	0	0	0	0	0	0	0	0	0	0	0	0
08:30 AM	0	0	0	0	0	0	0	0	0	0	0	0	0	0	0	0	0	0	0	0	0
08:45 AM	0	0	0	0	0	0	0	0	0	0	0	0	0	0	0	0	0	0	0	0	0
Total	0	0	0	0	0	0	0	0	0	0	0	0	0	0	0	0	0	0	0	0	0
09:00 AM	0	0	0	0	0	0	0	0	0	0	0	0	0	0	0	0	0	0	0	0	0
09:15 AM	0	0	0	0	0	0	0	0	0	0	0	0	0	0	0	0	0	0	0	0	0
09:30 AM	0	0	0	0	0	0	0	0	0	0	0	0	0	0	0	0	0	0	0	0	0
09:45 AM	0	0	0	0	0	0	0	0	0	0	0	0	0	0	0	0	0	0	0	0	0
Total	0	0	0	0	0	0	0	0	0	0	0	0	0	0	0	0	0	0	0	0	0
10:00 AM	0	0	0	0	0	0	0	0	0	0	0	0	0	0	0	0	0	0	0	0	0
10:15 AM	0	0	0	0	0	0	0	0	0	0	0	0	0	0	0	0	0	2	0	2	2
10:30 AM	0	0	0	0	0	0	0	0	0	0	0	0	0	0	0	0	0	0	0	0	0
10:45 AM	0	0	0	0	0	0	0	0	0	0	0	0	0	0	0	0	0	0	0	0	0
Total	0	0	0	0	0	0	0	0	0	0	0	0	0	0	0	0	0	2	0	2	2
11:00 AM	0	0	0	0	0	0	0	0	0	0	0	0	0	0	0	0	0	0	0	0	0
11:15 AM	0	0	0	0	0	0	0	0	0	0	0	0	0	0	0	0	0	0	0	0	0
11:30 AM	0	0	0	0	0	0	0	0	0	0	0	0	0	0	0	0	0	0	0	0	0
11:45 AM	0	0	0	0	0	0	0	0	0	0	0	0	0	0	0	0	0	0	0	0	0
Total	0	0	0	0	0	0	0	0	0	0	0	0	0	0	0	0	0	0	0	0	0
12:00 PM	0	0	0	0	0	0	0	0	0	0	0	0	0	0	0	0	0	0	0	0	0
12:15 PM	0	0	0	0	0	0	0	0	0	0	0	0	0	0	0	0	0	0	0	0	0
12:30 PM	0	0	0	0	0	0	0	0	0	0	0	0	0	0	0	1	0	0	0	1	1
12:45 PM	0	0	0	0	0	0	0	0	0	0	0	0	0	0	0	1	0	0	0	1	1
Total	0	0	0	0	0	0	0	0	0	0	0	0	0	0	0	2	0	0	0	2	2
01:00 PM	0	0	0	0	0	0	0	0	0	0	0	0	0	0	0	0	0	0	0	0	0
01:15 PM	0	0	0	0	0	0	0	0	0	0	0	0	0	0	0	0	0	0	0	0	0
01:30 PM	0	0	0	0	0	0	0	0	0	0	0	1	0	0	1	0	0	0	0	0	1
01:45 PM	0	0	0	0	0	0	0	0	0	0	0	0	0	0	0	0	0	0	0	0	0
Total	0	0	0	0	0	0	0	0	0	0	0	1	0	0	1	0	0	0	0	0	1
02:00 PM	0	0	0	0	0	0	0	0	0	0	0	0	0	0	0	0	0	0	0	0	0
02:15 PM	0	0	0	0	0	0	0	0	0	0	0	0	0	0	0	0	0	0	0	0	0
02:30 PM	0	0	0	0	0	0	0	0	0	0	0	0	0	0	0	0	0	0	0	0	0
02:45 PM	0	0	0	0	0	0	0	0	0	0	0	0	0	0	0	0	0	0	0	0	0
Total	0	0	0	0	0	0	0	0	0	0	0	0	0	0	0	0	0	0	0	0	0
03:00 PM	0	0	1	0	1	0	0	0	0	0	0	0	0	0	0	0	0	0	0	0	1
03:15 PM	0	0	0	0	0	0	0	0	0	0	0	0	0	0	0	0	0	0	0	0	0
03:30 PM	0	0	0	0	0	0	0	0	0	0	0	0	0	0	0	0	0	0	0	0	0

DocuSign Envelope ID: 5C03745C-4B01-4834-A65D-B77F558A4F46

Quality Counts

920 Blairhill Rd, Ste B-106
Charlotte, NC 28217

File Name : 15411709 - Brevard Rd -- Blue Ridge Pkwy
Site Code : 15411709
Start Date : 4/20/2021

Groups Printed- Bikes, Peds

	Brevard Rd Southbound					Westbound					Brevard Rd Northbound					Blue Ridge Pkwy Eastbound					
Start Time	Left	Thru	Right	Peds	App. Total	Left	Thru	Right	Peds	App. Total	Left	Thru	Right	Peds	App. Total	Left	Thru	Right	Peds	App. Total	Int. Total
03:45 PM	0	0	0	2	2	0	0	0	1	1	0	1	0	0	1	0	0	0	0	0	4
Total	0	0	1	2	3	0	0	0	1	1	0	1	0	0	1	0	0	0	0	0	5
04:00 PM	0	0	0	0	0	0	0	0	0	0	0	0	0	0	0	1	0	0	0	1	1
04:15 PM	0	0	0	0	0	0	0	0	0	0	0	0	0	0	0	1	0	0	0	1	1
04:30 PM	0	0	0	0	0	0	0	0	0	0	0	1	0	0	1	0	0	0	1	1	2
04:45 PM	0	0	0	0	0	0	0	0	0	0	0	0	0	0	0	0	0	0	0	0	0
Total	0	0	0	0	0	0	0	0	0	0	0	1	0	0	1	2	0	0	1	3	4
05:00 PM	0	0	0	0	0	0	0	0	0	0	0	0	0	0	0	0	0	0	0	0	0
05:15 PM	0	0	0	0	0	0	0	0	0	0	0	0	0	0	0	0	0	0	0	0	0
05:30 PM	0	0	0	0	0	0	0	0	1	1	0	0	0	0	0	0	0	0	0	0	1
05:45 PM	0	0	1	0	1	0	0	0	0	0	0	0	0	0	0	0	0	0	0	0	1
Total	0	0	1	0	1	0	0	0	1	1	0	0	0	0	0	0	0	0	0	0	2
06:00 PM	0	0	0	0	0	0	0	0	0	0	0	0	0	0	0	0	0	0	0	0	0
06:15 PM	0	1	0	0	1	0	0	0	0	0	0	0	0	0	0	0	0	0	0	0	1
06:30 PM	0	0	0	0	0	0	0	0	0	0	0	0	0	0	0	0	0	0	0	0	0
06:45 PM	0	0	0	0	0	0	0	0	0	0	0	0	0	0	0	0	0	0	0	0	0
Total	0	1	0	0	1	0	0	0	0	0	0	0	0	0	0	0	0	0	0	0	1
Grand Total	0	1	2	2	5	0	0	0	2	2	0	3	0	0	3	4	0	2	1	7	17
Apprch %	0	20	40	40		0	0	0	100		0	100	0	0		57.1	0	28.6	14.3		
Total %	0	5.9	11.8	11.8	29.4	0	0	0	11.8	11.8	0	17.6	0	0	17.6	23.5	0	11.8	5.9	41.2	

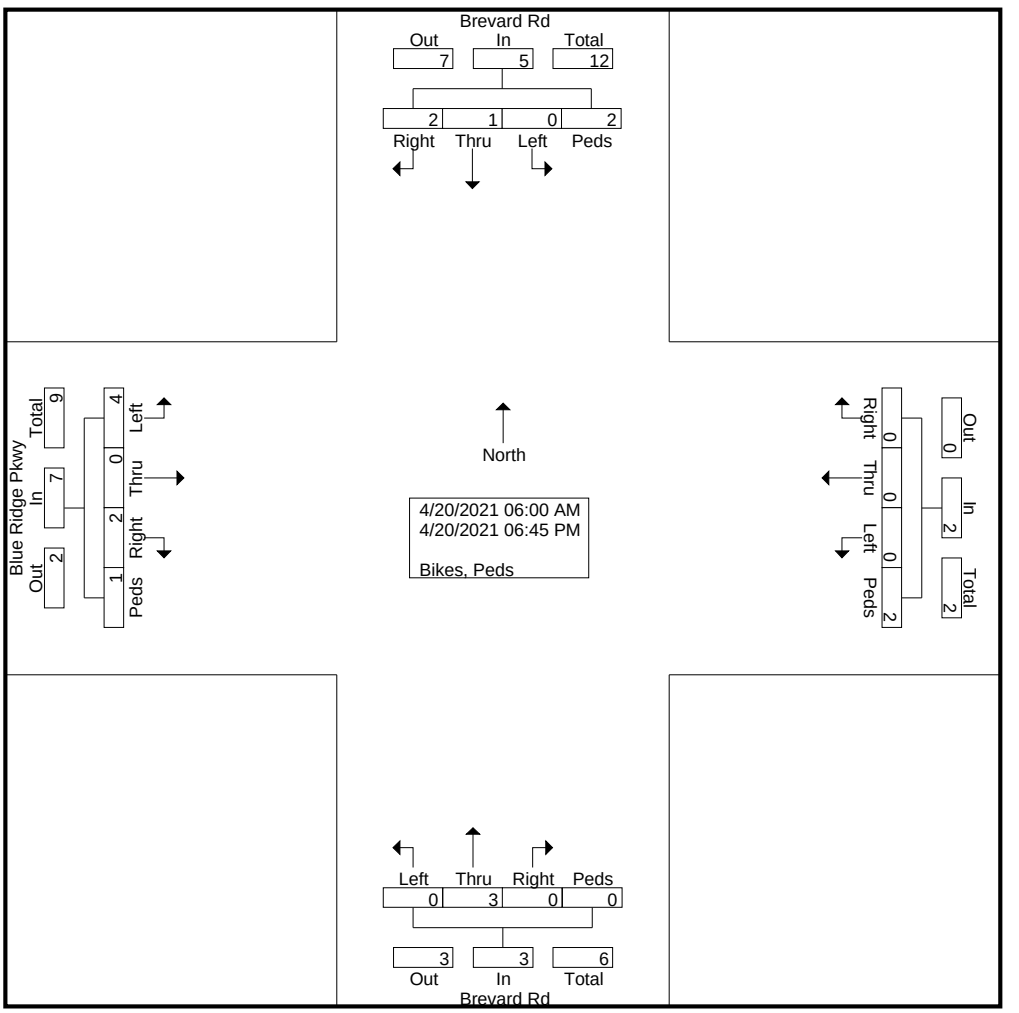

DocuSign Envelope ID: 5C03745C-4B01-4834-A65D-B77F558A4F46

Quality Counts

920 Blairhill Rd, Ste B-106
Charlotte, NC 28217

File Name : 15411709 - Brevard Rd -- Blue Ridge Pkwy
Site Code : 15411709
Start Date : 4/20/2021
Page No : 3

	Brevard Rd Southbound					Westbound					Brevard Rd Northbound					Blue Ridge Pkwy Eastbound					
Start Time	Left	Thru	Right	Peds	App. Total	Left	Thru	Right	Peds	App. Total	Left	Thru	Right	Peds	App. Total	Left	Thru	Right	Peds	App. Total	Int. Total
Peak Hour Analysis From 06:00 AM to 11:45 AM - Peak 1 of 1																					
Peak Hour for Entire Intersection Begins at 09:30 AM																					
09:30 AM	0	0	0	0	0	0	0	0	0	0	0	0	0	0	0	0	0	0	0	0	0
09:45 AM	0	0	0	0	0	0	0	0	0	0	0	0	0	0	0	0	0	0	0	0	0
10:00 AM	0	0	0	0	0	0	0	0	0	0	0	0	0	0	0	0	0	0	0	0	0
10:15 AM	0	0	0	0	0	0	0	0	0	0	0	0	0	0	0	0	0	**2**	0	**2**	**2**
Total Volume	0	0	0	0	0	0	0	0	0	0	0	0	0	0	0	0	0	2	0	2	2
% App. Total	0	0	0	0		0	0	0	0		0	0	0	0		0	0	100	0		
PHF	.000	.000	.000	.000	.000	.000	.000	.000	.000	.000	.000	.000	.000	.000	.000	.000	.000	.250	.000	.250	.250

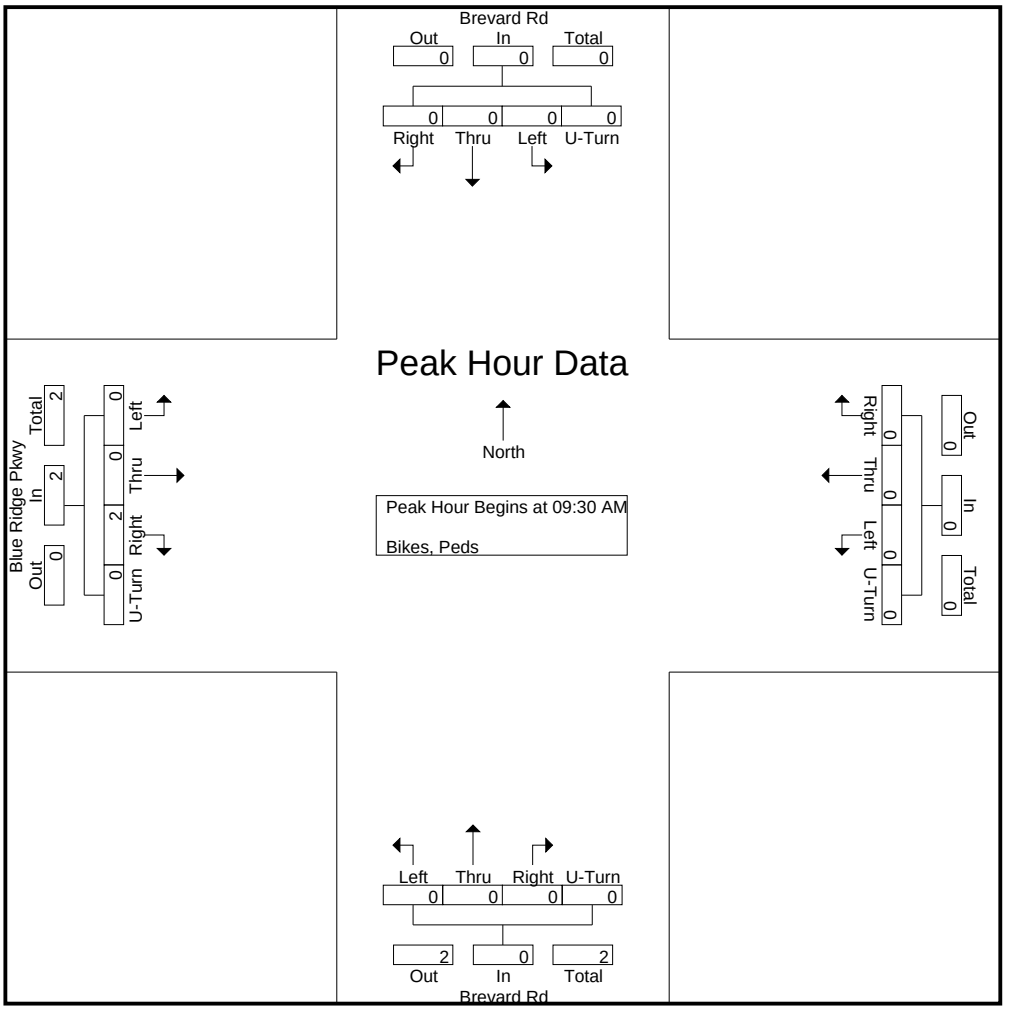

DocuSign Envelope ID: 5C03745C-4B01-4834-A65D-B77F558A4F46

Quality Counts

920 Blairhill Rd, Ste B-106
Charlotte, NC 28217

File Name : 15411709 - Brevard Rd -- Blue Ridge Pkwy
Site Code : 15411709
Start Date : 4/20/2021
Page No : 4

	Brevard Rd Southbound					Westbound					Brevard Rd Northbound					Blue Ridge Pkwy Eastbound					
Start Time	Left	Thru	Right	Peds	App. Total	Left	Thru	Right	Peds	App. Total	Left	Thru	Right	Peds	App. Total	Left	Thru	Right	Peds	App. Total	Int. Total
Peak Hour Analysis From 12:00 PM to 06:45 PM - Peak 1 of 1																					
Peak Hour for Entire Intersection Begins at 03:45 PM																					
03:45 PM	0	0	0	**2**	**2**	0	0	0	**1**	**1**	0	**1**	0	0	**1**	0	0	0	0	0	**4**
04:00 PM	0	0	0	0	0	0	0	0	0	0	0	0	0	0	0	**1**	0	0	0	**1**	1
04:15 PM	0	0	0	0	0	0	0	0	0	0	0	0	0	0	0	1	0	0	0	1	1
04:30 PM	0	0	0	0	0	0	0	0	0	0	0	1	0	0	1	0	0	0	**1**	1	2
Total Volume	0	0	0	2	2	0	0	0	1	1	0	2	0	0	2	2	0	0	1	3	8
% App. Total	0	0	0	100		0	0	0	100		0	100	0	0		66.7	0	0	33.3		
PHF	.000	.000	.000	.250	.250	.000	.000	.000	.250	.250	.000	.500	.000	.000	.500	.500	.000	.000	.250	.750	.500

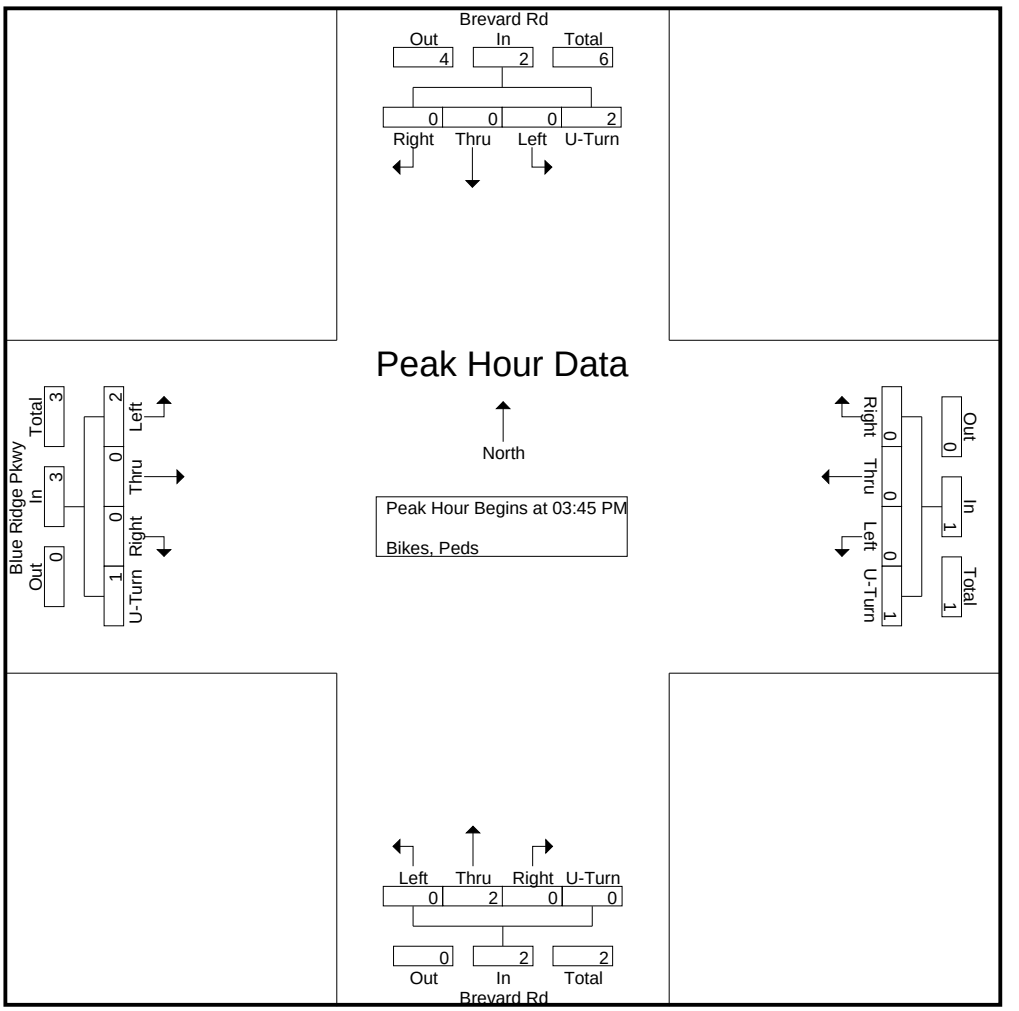

DocuSign Envelope ID: 5C03745C-4B01-4834-A65D-B77F558A4F46

QUALITY COUNTS LLC
920 Blairhill Rd, Suite 106, Charlotte, NC 28217
704.215.4616

Count Number: 15411710
County: Buncombe
City: Asheville
Division: 13

Location: Frederick Law Olmstead Way & Blue Ridge Pkwy
General Location Type: Intersection
Count Type: Turning Movement (Classification)
Count Start Date: 4/20/2021
Time: 6:00 AM – 7:00 PM
Volume: 4,521

Maximum Temperature: 69° F
Minimum Temperature: 40° F
Precipitation: 0.00 in
Snowfall: 0.0 in
Average Sky Cover: 0.2
Weather Conditions: Clear

1. **School in Session:** Yes
2. **Pedestrians Counted**: Yes
3. **Disabled Pedestrians Present**: No
   Description and Approaches Used: N/A
4. **Counted By**: Gene Buchli
5. **Data Processor**: Jon B
6. **Signal Inventory**: N/A
7. **Data Collection Method**: Video/Count Board
8. **Equipment Operating Properly**: Yes
9. **Area Lighting Present**: Yes
10. **Nearest Roadway Stop Sign < 300 ft:** No
    If yes, list approaches: N/A
11. **Nearest Traffic Signal < 300 ft:** Yes
    If yes, list approaches: Westbound
12. **At-Grade Railroad Crossing Present (<200 ft):** No
    If yes, list approaches & distance: N/A
13. **Other:**

↑ North



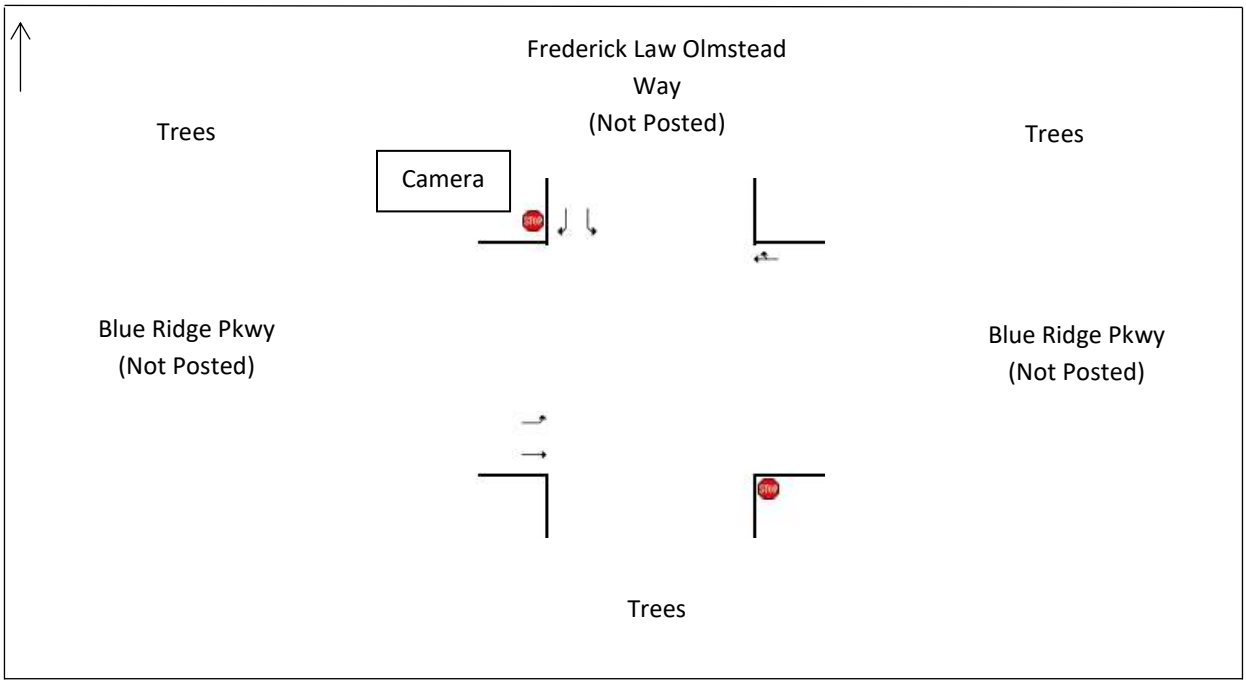

DocuSign Envelope ID: 5C03745C-4B01-4834-A65D-B77F558A4F46

Quality Counts

920 Blairhill Rd, Ste B-106
Charlotte, NC 28217

File Name : 15411710 - Frederick Law Olmstead Way -- Blue Ridge Pkwy
Site Code : 15411710
Start Date : 4/20/2021
Page No : 1

Groups Printed- Classes 1, 2, 3 - Classes 4, 5, 6, 7 - Classes 8, 9, 10 - Classes 11, 12, 13

	Frederick Law Olmstead Way Southbound					Blue Ridge Pkwy Westbound					Northbound					Blue Ridge Pkwy Eastbound					
Start Time	Left	Thru	Right	U-Turn	App. Total	Left	Thru	Right	U-Turn	App. Total	Left	Thru	Right	U-Turn	App. Total	Left	Thru	Right	U-Turn	App. Total	Int. Total
06:00 AM	0	0	0	0	0	0	6	0	0	6	0	0	0	0	0	0	0	0	0	0	6
06:15 AM	0	0	0	0	0	0	3	3	0	6	0	0	0	0	0	0	5	0	0	5	11
06:30 AM	0	0	0	0	0	0	10	1	0	11	0	0	0	0	0	0	8	0	0	8	19
06:45 AM	0	0	0	0	0	0	10	8	0	18	0	0	0	0	0	0	4	0	0	4	22
Total	0	0	0	0	0	0	29	12	0	41	0	0	0	0	0	0	17	0	0	17	58
07:00 AM	0	0	0	0	0	0	16	3	0	19	0	0	0	0	0	1	9	0	0	10	29
07:15 AM	0	0	0	0	0	0	18	2	0	20	0	0	0	0	0	0	8	0	0	8	28
07:30 AM	0	0	0	0	0	0	24	0	0	24	0	0	0	0	0	0	12	0	0	12	36
07:45 AM	0	0	0	1	1	0	27	0	0	27	0	0	0	0	0	1	18	0	0	19	47
Total	0	0	0	1	1	0	85	5	0	90	0	0	0	0	0	2	47	0	0	49	140
08:00 AM	0	0	0	0	0	0	20	8	0	28	0	0	0	0	0	3	23	0	0	26	54
08:15 AM	1	0	0	0	1	0	37	10	1	48	0	0	0	0	0	2	15	0	0	17	66
08:30 AM	0	0	0	0	0	0	28	3	0	31	0	0	0	0	0	1	17	0	0	18	49
08:45 AM	1	0	1	0	2	0	22	12	0	34	0	0	0	0	0	4	25	0	0	29	65
Total	2	0	1	0	3	0	107	33	1	141	0	0	0	0	0	10	80	0	0	90	234
09:00 AM	4	0	0	0	4	0	17	5	0	22	0	0	0	0	0	1	20	0	0	21	47
09:15 AM	4	0	2	0	6	0	24	14	0	38	0	0	0	0	0	3	18	0	0	21	65
09:30 AM	3	0	0	0	3	0	27	18	0	45	0	0	0	0	0	2	16	0	1	19	67
09:45 AM	3	0	1	0	4	0	24	10	0	34	0	0	0	0	0	1	11	0	0	12	50
Total	14	0	3	0	17	0	92	47	0	139	0	0	0	0	0	7	65	0	1	73	229
10:00 AM	4	0	1	0	5	0	18	20	0	38	0	0	0	0	0	4	13	0	0	17	60
10:15 AM	4	0	2	0	6	0	21	15	0	36	0	0	0	0	0	5	27	0	0	32	74
10:30 AM	8	0	0	0	8	0	27	25	0	52	0	0	0	0	0	2	18	0	0	20	80
10:45 AM	7	0	2	1	10	0	30	26	1	57	0	0	0	0	0	1	21	0	0	22	89
Total	23	0	5	1	29	0	96	86	1	183	0	0	0	0	0	12	79	0	0	91	303
11:00 AM	6	0	2	0	8	0	40	24	1	65	0	0	0	0	0	3	31	0	0	34	107
11:15 AM	10	0	2	0	12	0	39	13	0	52	0	0	0	0	0	9	20	0	0	29	93
11:30 AM	16	0	2	0	18	0	16	17	0	33	0	0	0	0	0	5	25	0	0	30	81
11:45 AM	16	0	5	0	21	0	32	23	0	55	0	0	0	0	0	4	31	0	0	35	111
Total	48	0	11	0	59	0	127	77	1	205	0	0	0	0	0	21	107	0	0	128	392
12:00 PM	16	0	4	1	21	0	43	18	1	62	0	0	0	0	0	3	24	0	0	27	110
12:15 PM	20	0	4	0	24	0	27	24	0	51	0	0	0	0	0	2	29	0	0	31	106
12:30 PM	19	0	4	0	23	0	38	22	0	60	0	0	0	0	0	6	34	0	0	40	123
12:45 PM	15	0	5	0	20	0	38	21	0	59	0	0	0	0	0	6	32	0	0	38	117
Total	70	0	17	1	88	0	146	85	1	232	0	0	0	0	0	17	119	0	0	136	456
01:00 PM	20	0	4	0	24	0	30	15	0	45	0	0	0	0	0	3	38	0	0	41	110
01:15 PM	13	0	9	0	22	0	41	13	0	54	0	0	0	0	0	1	33	0	0	34	110
01:30 PM	11	0	5	0	16	0	21	24	0	45	0	0	0	0	0	5	33	0	0	38	99
01:45 PM	23	0	8	0	31	0	40	18	0	58	0	0	0	0	0	5	38	0	0	43	132
Total	67	0	26	0	93	0	132	70	0	202	0	0	0	0	0	14	142	0	0	156	451
02:00 PM	12	0	8	0	20	0	35	16	0	51	0	0	0	0	0	2	47	0	0	49	120
02:15 PM	29	0	4	0	33	0	31	11	0	42	0	0	0	0	0	3	38	0	0	41	116
02:30 PM	17	0	2	0	19	0	34	14	0	48	0	0	0	0	0	2	38	0	0	40	107
02:45 PM	12	0	5	0	17	0	47	15	0	62	0	0	0	0	0	4	49	0	0	53	132
Total	70	0	19	0	89	0	147	56	0	203	0	0	0	0	0	11	172	0	0	183	475
03:00 PM	20	0	3	0	23	0	40	9	0	49	0	0	0	0	0	3	37	0	0	40	112
03:15 PM	33	0	4	0	37	0	43	18	0	61	0	0	0	0	0	2	42	0	0	44	142
03:30 PM	33	0	5	0	38	0	35	9	0	44	0	0	0	0	0	3	44	0	0	47	129

DocuSign Envelope ID: 5C03745C-4B01-4834-A65D-B77F558A4F46

Quality Counts

920 Blairhill Rd, Ste B-106
Charlotte, NC 28217

File Name : 15411710 - Frederick Law Olmstead Way -- Blue Ridge Pkwy
Site Code : 15411710
Start Date : 4/20/2021

Groups Printed- Classes 1, 2, 3 - Classes 4, 5, 6, 7 - Classes 8, 9, 10 - Classes 11, 12, 13

	Frederick Law Olmstead Way Southbound					Blue Ridge Pkwy Westbound					Northbound					Blue Ridge Pkwy Eastbound					
Start Time	Left	Thru	Right	U-Turn	App. Total	Left	Thru	Right	U-Turn	App. Total	Left	Thru	Right	U-Turn	App. Total	Left	Thru	Right	U-Turn	App. Total	Int. Total
03:45 PM	14	0	2	0	16	0	27	11	0	38	0	0	0	0	0	1	41	0	0	42	96
Total	100	0	14	0	114	0	145	47	0	192	0	0	0	0	0	9	164	0	0	173	479
04:00 PM	14	0	11	0	25	0	39	21	0	60	0	0	0	0	0	6	60	0	1	67	152
04:15 PM	20	0	5	0	25	0	34	17	1	52	0	0	0	0	0	3	62	0	0	65	142
04:30 PM	22	0	8	0	30	0	39	10	0	49	0	0	0	0	0	3	47	0	0	50	129
04:45 PM	15	0	3	0	18	0	46	8	0	54	0	0	0	0	0	1	46	0	0	47	119
Total	71	0	27	0	98	0	158	56	1	215	0	0	0	0	0	13	215	0	1	229	542
05:00 PM	17	0	6	0	23	0	43	7	0	50	0	0	0	0	0	1	40	0	0	41	114
05:15 PM	18	0	5	0	23	0	31	3	1	35	0	0	0	0	0	1	55	0	0	56	114
05:30 PM	21	0	3	0	24	0	34	7	0	41	0	0	0	0	0	0	57	0	0	57	122
05:45 PM	9	0	3	0	12	0	25	10	0	35	0	0	0	0	0	0	47	0	0	47	94
Total	65	0	17	0	82	0	133	27	1	161	0	0	0	0	0	2	199	0	0	201	444
06:00 PM	11	0	4	0	15	0	20	11	0	31	0	0	0	0	0	0	45	0	0	45	91
06:15 PM	6	0	1	0	7	0	28	2	0	30	0	0	0	0	0	0	45	0	0	45	82
06:30 PM	6	0	1	0	7	0	25	5	0	30	0	0	0	0	0	3	37	0	0	40	77
06:45 PM	9	0	2	0	11	0	21	3	1	25	0	0	0	0	0	0	32	0	0	32	68
Total	32	0	8	0	40	0	94	21	1	116	0	0	0	0	0	3	159	0	0	162	318
Grand Total	562	0	148	3	713	0	1491	622	7	2120	0	0	0	0	0	121	1565	0	2	1688	4521
Apprch %	78.8	0	20.8	0.4		0	70.3	29.3	0.3		0	0	0	0		7.2	92.7	0	0.1		
Total %	12.4	0	3.3	0.1	15.8	0	33	13.8	0.2	46.9	0	0	0	0	0	2.7	34.6	0	0	37.3	
Classes 1, 2, 3	555	0	148	3	706	0	1484	614	6	2104	0	0	0	0	0	121	1560	0	2	1683	4493
% Classes 1, 2, 3	98.8	0	100	100	99	0	99.5	98.7	85.7	99.2	0	0	0	0	0	100	99.7	0	100	99.7	99.4
Classes 4, 5, 6, 7	7	0	0	0	7	0	7	8	1	16	0	0	0	0	0	0	5	0	0	5	28
% Classes 4, 5, 6, 7	1.2	0	0	0	1	0	0.5	1.3	14.3	0.8	0	0	0	0	0	0	0.3	0	0	0.3	0.6
Classes 8, 9, 10	0	0	0	0	0	0	0	0	0	0	0	0	0	0	0	0	0	0	0	0	0
% Classes 8, 9, 10	0	0	0	0	0	0	0	0	0	0	0	0	0	0	0	0	0	0	0	0	0
Classes 11, 12, 13	0	0	0	0	0	0	0	0	0	0	0	0	0	0	0	0	0	0	0	0	0
% Classes 11, 12, 13	0	0	0	0	0	0	0	0	0	0	0	0	0	0	0	0	0	0	0	0	0

DocuSign Envelope ID: 5C03745C-4B01-4834-A65D-B77F558A4F46

Quality Counts

920 Blairhill Rd, Ste B-106
Charlotte, NC 28217

File Name : 15411710 - Frederick Law Olmstead Way -- Blue Ridge Pkwy
Site Code : 15411710
Start Date : 4/20/2021
Page No : 3

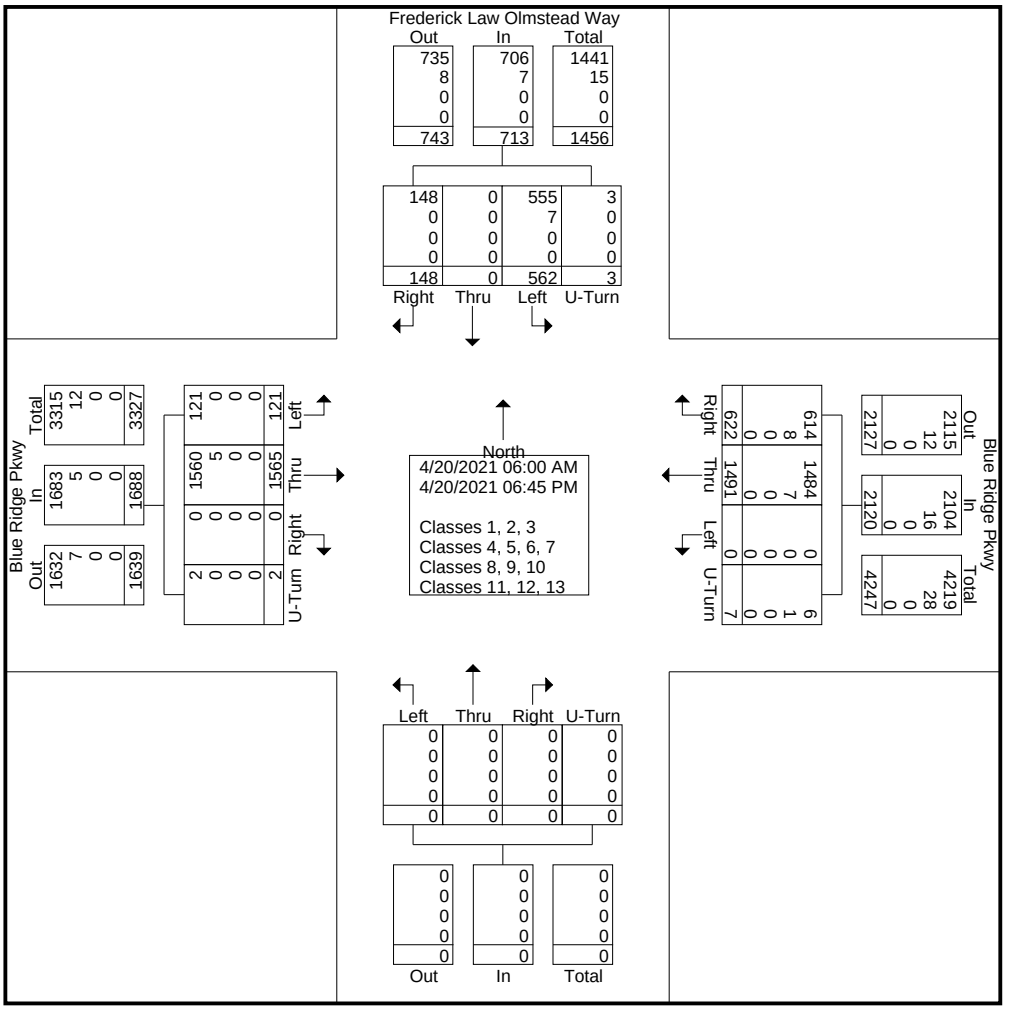

DocuSign Envelope ID: 5C03745C-4B01-4834-A65D-B77F558A4F46

Quality Counts

920 Blairhill Rd, Ste B-106
Charlotte, NC 28217

File Name : 15411710 - Frederick Law Olmstead Way -- Blue Ridge Pkwy
Site Code : 15411710
Start Date : 4/20/2021
Page No : 4

	Frederick Law Olmstead Way Southbound					Blue Ridge Pkwy Westbound					Northbound					Blue Ridge Pkwy Eastbound					
Start Time	Left	Thru	Right	U-Turn	App. Total	Left	Thru	Right	U-Turn	App. Total	Left	Thru	Right	U-Turn	App. Total	Left	Thru	Right	U-Turn	App. Total	Int. Total
Peak Hour Analysis From 06:00 AM to 11:45 AM - Peak 1 of 1																					
Peak Hour for Entire Intersection Begins at 11:00 AM																					
11:00 AM	6	0	2	0	8	0	**40**	**24**	**1**	**65**	0	0	0	0	0	3	**31**	0	0	34	107
11:15 AM	10	0	2	0	12	0	39	13	0	52	0	0	0	0	0	**9**	20	0	0	29	93
11:30 AM	**16**	0	2	0	18	0	16	17	0	33	0	0	0	0	0	5	25	0	0	30	81
11:45 AM	16	0	**5**	0	**21**	0	32	23	0	55	0	0	0	0	0	4	31	0	0	**35**	**111**
Total Volume	48	0	11	0	59	0	127	77	1	205	0	0	0	0	0	21	107	0	0	128	392
% App. Total	81.4	0	18.6	0		0	62	37.6	0.5		0	0	0	0		16.4	83.6	0	0		
PHF	.750	.000	.550	.000	.702	.000	.794	.802	.250	.788	.000	.000	.000	.000	.000	.583	.863	.000	.000	.914	.883

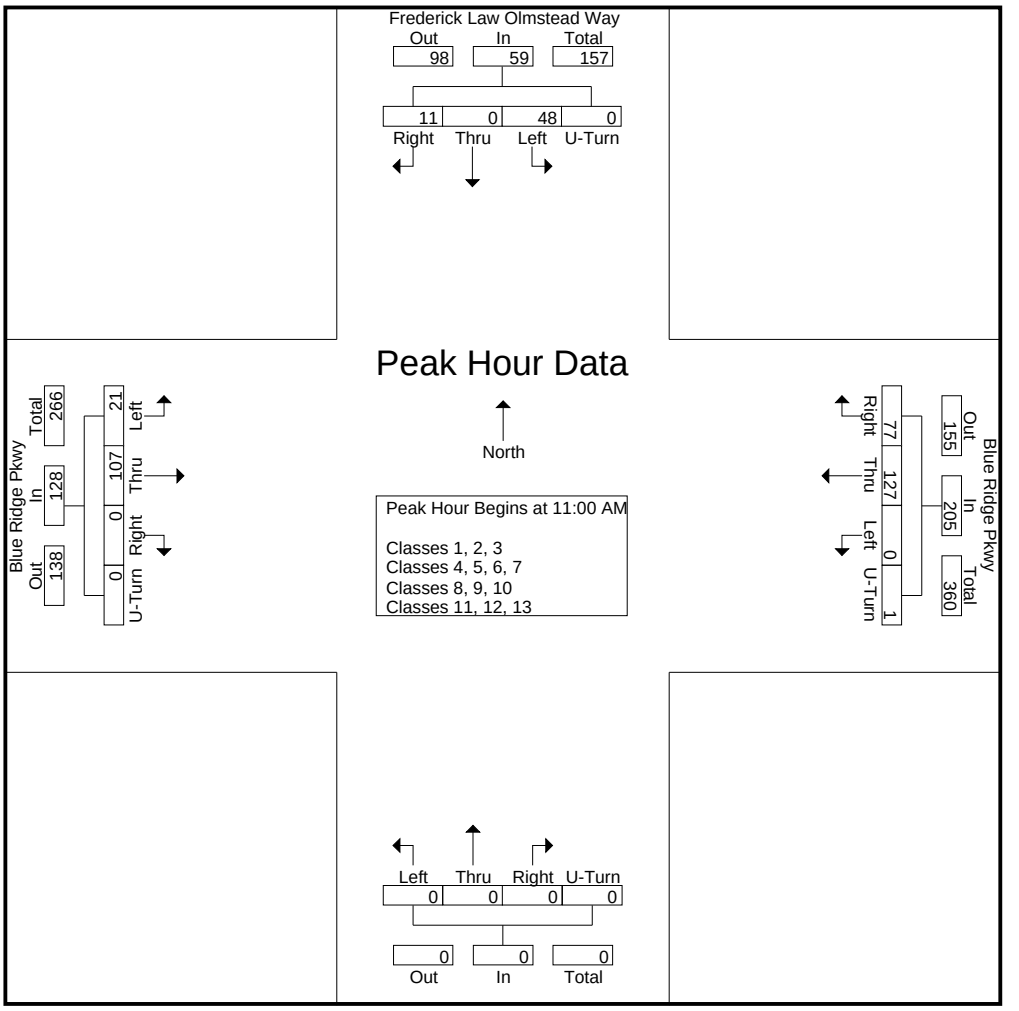

DocuSign Envelope ID: 5C03745C-4B01-4834-A65D-B77F558A4F46

Quality Counts

920 Blairhill Rd, Ste B-106
Charlotte, NC 28217

File Name : 15411710 - Frederick Law Olmstead Way -- Blue Ridge Pkwy
Site Code : 15411710
Start Date : 4/20/2021
Page No : 5

	Frederick Law Olmstead Way Southbound					Blue Ridge Pkwy Westbound					Northbound					Blue Ridge Pkwy Eastbound					
Start Time	Left	Thru	Right	U-Turn	App. Total	Left	Thru	Right	U-Turn	App. Total	Left	Thru	Right	U-Turn	App. Total	Left	Thru	Right	U-Turn	App. Total	Int. Total
Peak Hour Analysis From 12:00 PM to 06:45 PM - Peak 1 of 1																					
Peak Hour for Entire Intersection Begins at 04:00 PM																					
04:00 PM	14	0	**11**	0	25	0	39	**21**	0	**60**	0	0	0	0	0	**6**	60	0	**1**	**67**	**152**
04:15 PM	20	0	5	0	25	0	34	17	**1**	52	0	0	0	0	0	3	**62**	0	0	65	142
04:30 PM	**22**	0	8	0	**30**	0	39	10	0	49	0	0	0	0	0	3	47	0	0	50	129
04:45 PM	15	0	3	0	18	0	**46**	8	0	54	0	0	0	0	0	1	46	0	0	47	119
Total Volume	71	0	27	0	98	0	158	56	1	215	0	0	0	0	0	13	215	0	1	229	542
% App. Total	72.4	0	27.6	0		0	73.5	26	0.5		0	0	0	0		5.7	93.9	0	0.4		
PHF	.807	.000	.614	.000	.817	.000	.859	.667	.250	.896	.000	.000	.000	.000	.000	.542	.867	.000	.250	.854	.891

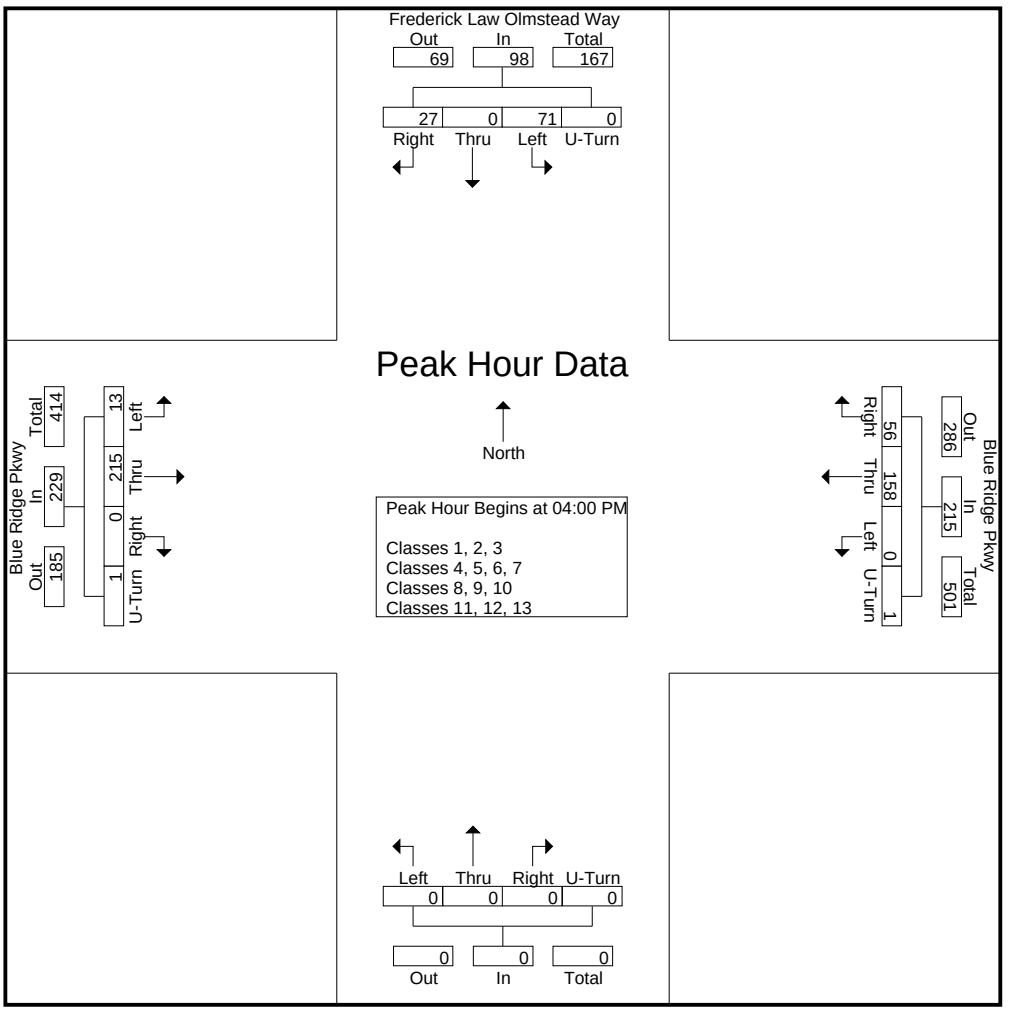

DocuSign Envelope ID: 5C03745C-4B01-4834-A65D-B77F558A4F46

Quality Counts

920 Blairhill Rd, Ste B-106
Charlotte, NC 28217

File Name : 15411710 - Frederick Law Olmstead Way -- Blue Ridge Pkwy
Site Code : 15411710
Start Date : 4/20/2021
Page No : 1

Groups Printed- Classes 1, 2, 3

	Frederick Law Olmstead Way Southbound					Blue Ridge Pkwy Westbound					Northbound					Blue Ridge Pkwy Eastbound					
Start Time	Left	Thru	Right	U-Turn	App. Total	Left	Thru	Right	U-Turn	App. Total	Left	Thru	Right	U-Turn	App. Total	Left	Thru	Right	U-Turn	App. Total	Int. Total
06:00 AM	0	0	0	0	0	0	6	0	0	6	0	0	0	0	0	0	0	0	0	0	6
06:15 AM	0	0	0	0	0	0	3	3	0	6	0	0	0	0	0	0	5	0	0	5	11
06:30 AM	0	0	0	0	0	0	10	1	0	11	0	0	0	0	0	0	8	0	0	8	19
06:45 AM	0	0	0	0	0	0	10	8	0	18	0	0	0	0	0	0	4	0	0	4	22
Total	0	0	0	0	0	0	29	12	0	41	0	0	0	0	0	0	17	0	0	17	58
07:00 AM	0	0	0	0	0	0	16	3	0	19	0	0	0	0	0	1	9	0	0	10	29
07:15 AM	0	0	0	0	0	0	18	2	0	20	0	0	0	0	0	0	8	0	0	8	28
07:30 AM	0	0	0	0	0	0	24	0	0	24	0	0	0	0	0	0	12	0	0	12	36
07:45 AM	0	0	0	1	1	0	27	0	0	27	0	0	0	0	0	1	18	0	0	19	47
Total	0	0	0	1	1	0	85	5	0	90	0	0	0	0	0	2	47	0	0	49	140
08:00 AM	0	0	0	0	0	0	20	8	0	28	0	0	0	0	0	3	23	0	0	26	54
08:15 AM	1	0	0	0	1	0	37	10	1	48	0	0	0	0	0	2	15	0	0	17	66
08:30 AM	0	0	0	0	0	0	28	3	0	31	0	0	0	0	0	1	17	0	0	18	49
08:45 AM	1	0	1	0	2	0	22	12	0	34	0	0	0	0	0	4	25	0	0	29	65
Total	2	0	1	0	3	0	107	33	1	141	0	0	0	0	0	10	80	0	0	90	234
09:00 AM	4	0	0	0	4	0	17	5	0	22	0	0	0	0	0	1	20	0	0	21	47
09:15 AM	4	0	2	0	6	0	23	14	0	37	0	0	0	0	0	3	18	0	0	21	64
09:30 AM	3	0	0	0	3	0	27	18	0	45	0	0	0	0	0	2	16	0	1	19	67
09:45 AM	3	0	1	0	4	0	24	10	0	34	0	0	0	0	0	1	11	0	0	12	50
Total	14	0	3	0	17	0	91	47	0	138	0	0	0	0	0	7	65	0	1	73	228
10:00 AM	4	0	1	0	5	0	18	20	0	38	0	0	0	0	0	4	13	0	0	17	60
10:15 AM	4	0	2	0	6	0	20	15	0	35	0	0	0	0	0	5	26	0	0	31	72
10:30 AM	8	0	0	0	8	0	27	25	0	52	0	0	0	0	0	2	17	0	0	19	79
10:45 AM	7	0	2	1	10	0	29	25	1	55	0	0	0	0	0	1	21	0	0	22	87
Total	23	0	5	1	29	0	94	85	1	180	0	0	0	0	0	12	77	0	0	89	298
11:00 AM	6	0	2	0	8	0	40	23	0	63	0	0	0	0	0	3	31	0	0	34	105
11:15 AM	9	0	2	0	11	0	39	13	0	52	0	0	0	0	0	9	20	0	0	29	92
11:30 AM	16	0	2	0	18	0	16	17	0	33	0	0	0	0	0	5	25	0	0	30	81
11:45 AM	16	0	5	0	21	0	32	22	0	54	0	0	0	0	0	4	31	0	0	35	110
Total	47	0	11	0	58	0	127	75	0	202	0	0	0	0	0	21	107	0	0	128	388
12:00 PM	15	0	4	1	20	0	43	18	1	62	0	0	0	0	0	3	24	0	0	27	109
12:15 PM	20	0	4	0	24	0	27	24	0	51	0	0	0	0	0	2	29	0	0	31	106
12:30 PM	19	0	4	0	23	0	38	22	0	60	0	0	0	0	0	6	34	0	0	40	123
12:45 PM	14	0	5	0	19	0	38	19	0	57	0	0	0	0	0	6	32	0	0	38	114
Total	68	0	17	1	86	0	146	83	1	230	0	0	0	0	0	17	119	0	0	136	452
01:00 PM	19	0	4	0	23	0	30	14	0	44	0	0	0	0	0	3	38	0	0	41	108
01:15 PM	12	0	9	0	21	0	41	12	0	53	0	0	0	0	0	1	33	0	0	34	108
01:30 PM	11	0	5	0	16	0	21	24	0	45	0	0	0	0	0	5	33	0	0	38	99
01:45 PM	23	0	8	0	31	0	40	17	0	57	0	0	0	0	0	5	38	0	0	43	131
Total	65	0	26	0	91	0	132	67	0	199	0	0	0	0	0	14	142	0	0	156	446
02:00 PM	12	0	8	0	20	0	34	16	0	50	0	0	0	0	0	2	47	0	0	49	119
02:15 PM	28	0	4	0	32	0	31	11	0	42	0	0	0	0	0	3	38	0	0	41	115
02:30 PM	17	0	2	0	19	0	34	14	0	48	0	0	0	0	0	2	38	0	0	40	107
02:45 PM	11	0	5	0	16	0	47	15	0	62	0	0	0	0	0	4	49	0	0	53	131
Total	68	0	19	0	87	0	146	56	0	202	0	0	0	0	0	11	172	0	0	183	472
03:00 PM	20	0	3	0	23	0	38	9	0	47	0	0	0	0	0	3	37	0	0	40	110
03:15 PM	33	0	4	0	37	0	43	18	0	61	0	0	0	0	0	2	42	0	0	44	142
03:30 PM	33	0	5	0	38	0	35	9	0	44	0	0	0	0	0	3	44	0	0	47	129

DocuSign Envelope ID: 5C03745C-4B01-4834-A65D-B77F558A4F46

Quality Counts

920 Blairhill Rd, Ste B-106
Charlotte, NC 28217

File Name : 15411710 - Frederick Law Olmstead Way -- Blue Ridge Pkwy
Site Code : 15411710
Start Date : 4/20/2021

Groups Printed- Classes 1, 2, 3

	Frederick Law Olmstead Way Southbound					Blue Ridge Pkwy Westbound					Northbound					Blue Ridge Pkwy Eastbound					
Start Time	Left	Thru	Right	U-Turn	App. Total	Left	Thru	Right	U-Turn	App. Total	Left	Thru	Right	U-Turn	App. Total	Left	Thru	Right	U-Turn	App. Total	Int. Total
03:45 PM	14	0	2	0	16	0	27	11	0	38	0	0	0	0	0	1	41	0	0	42	96
Total	100	0	14	0	114	0	143	47	0	190	0	0	0	0	0	9	164	0	0	173	477
04:00 PM	14	0	11	0	25	0	39	21	0	60	0	0	0	0	0	6	60	0	1	67	152
04:15 PM	20	0	5	0	25	0	34	17	1	52	0	0	0	0	0	3	62	0	0	65	142
04:30 PM	22	0	8	0	30	0	39	10	0	49	0	0	0	0	0	3	46	0	0	49	128
04:45 PM	15	0	3	0	18	0	46	8	0	54	0	0	0	0	0	1	44	0	0	45	117
Total	71	0	27	0	98	0	158	56	1	215	0	0	0	0	0	13	212	0	1	226	539
05:00 PM	17	0	6	0	23	0	43	7	0	50	0	0	0	0	0	1	40	0	0	41	114
05:15 PM	18	0	5	0	23	0	31	3	1	35	0	0	0	0	0	1	55	0	0	56	114
05:30 PM	21	0	3	0	24	0	33	7	0	40	0	0	0	0	0	0	57	0	0	57	121
05:45 PM	9	0	3	0	12	0	25	10	0	35	0	0	0	0	0	0	47	0	0	47	94
Total	65	0	17	0	82	0	132	27	1	160	0	0	0	0	0	2	199	0	0	201	443
06:00 PM	11	0	4	0	15	0	20	11	0	31	0	0	0	0	0	0	45	0	0	45	91
06:15 PM	6	0	1	0	7	0	28	2	0	30	0	0	0	0	0	0	45	0	0	45	82
06:30 PM	6	0	1	0	7	0	25	5	0	30	0	0	0	0	0	3	37	0	0	40	77
06:45 PM	9	0	2	0	11	0	21	3	1	25	0	0	0	0	0	0	32	0	0	32	68
Total	32	0	8	0	40	0	94	21	1	116	0	0	0	0	0	3	159	0	0	162	318
Grand Total	555	0	148	3	706	0	1484	614	6	2104	0	0	0	0	0	121	1560	0	2	1683	4493
Apprch %	78.6	0	21	0.4		0	70.5	29.2	0.3		0	0	0	0		7.2	92.7	0	0.1		
Total %	12.4	0	3.3	0.1	15.7	0	33	13.7	0.1	46.8	0	0	0	0	0	2.7	34.7	0	0	37.5	

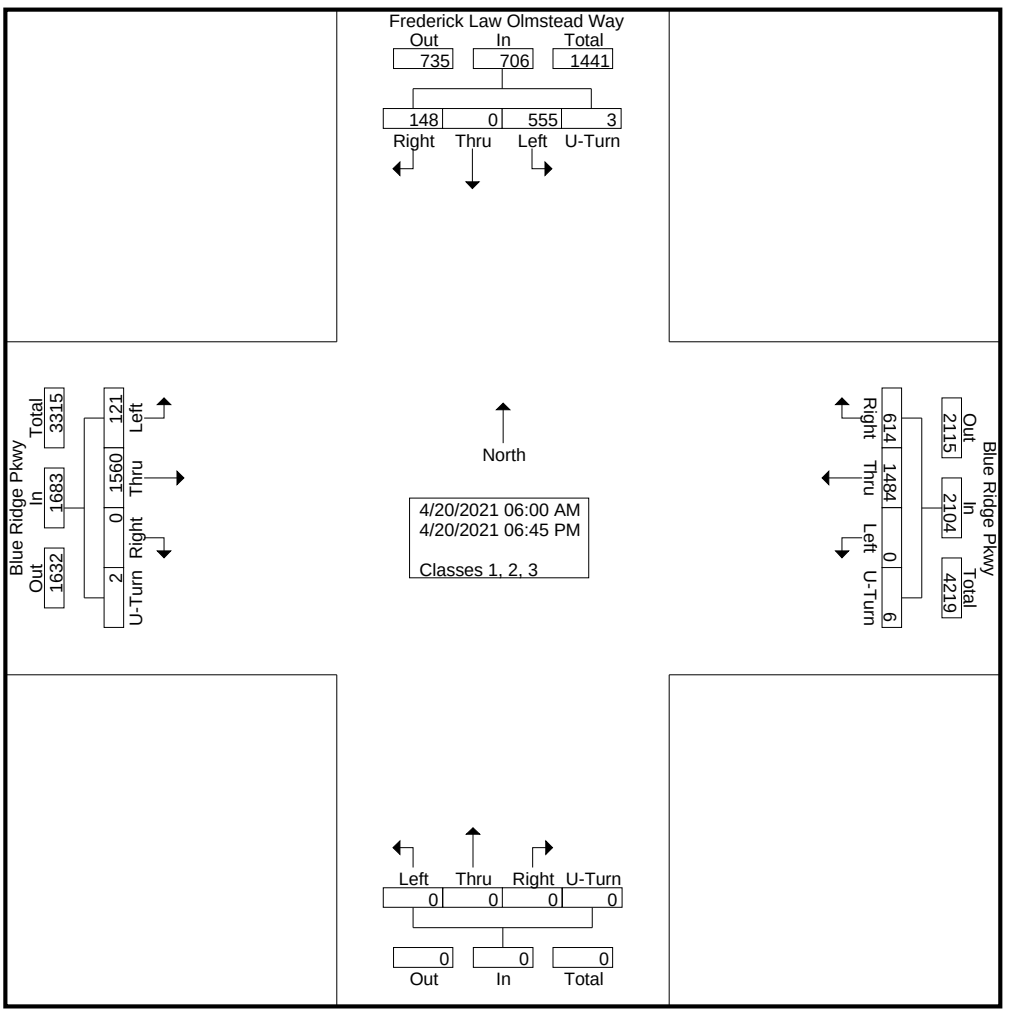

DocuSign Envelope ID: 5C03745C-4B01-4834-A65D-B77F558A4F46

Quality Counts

920 Blairhill Rd, Ste B-106
Charlotte, NC 28217

File Name : 15411710 - Frederick Law Olmstead Way -- Blue Ridge Pkwy
Site Code : 15411710
Start Date : 4/20/2021
Page No : 3

	Frederick Law Olmstead Way Southbound					Blue Ridge Pkwy Westbound					Northbound					Blue Ridge Pkwy Eastbound					
Start Time	Left	Thru	Right	U-Turn	App. Total	Left	Thru	Right	U-Turn	App. Total	Left	Thru	Right	U-Turn	App. Total	Left	Thru	Right	U-Turn	App. Total	Int. Total
Peak Hour Analysis From 06:00 AM to 11:45 AM - Peak 1 of 1																					
Peak Hour for Entire Intersection Begins at 11:00 AM																					
11:00 AM	6	0	2	0	8	0	**40**	**23**	0	**63**	0	0	0	0	0	3	**31**	0	0	34	105
11:15 AM	9	0	2	0	11	0	39	13	0	52	0	0	0	0	0	**9**	20	0	0	29	92
11:30 AM	**16**	0	2	0	18	0	16	17	0	33	0	0	0	0	0	5	25	0	0	30	81
11:45 AM	16	0	**5**	0	**21**	0	32	22	0	54	0	0	0	0	0	4	31	0	0	**35**	**110**
Total Volume	47	0	11	0	58	0	127	75	0	202	0	0	0	0	0	21	107	0	0	128	388
% App. Total	81	0	19	0		0	62.9	37.1	0		0	0	0	0		16.4	83.6	0	0		
PHF	.734	.000	.550	.000	.690	.000	.794	.815	.000	.802	.000	.000	.000	.000	.000	.583	.863	.000	.000	.914	.882

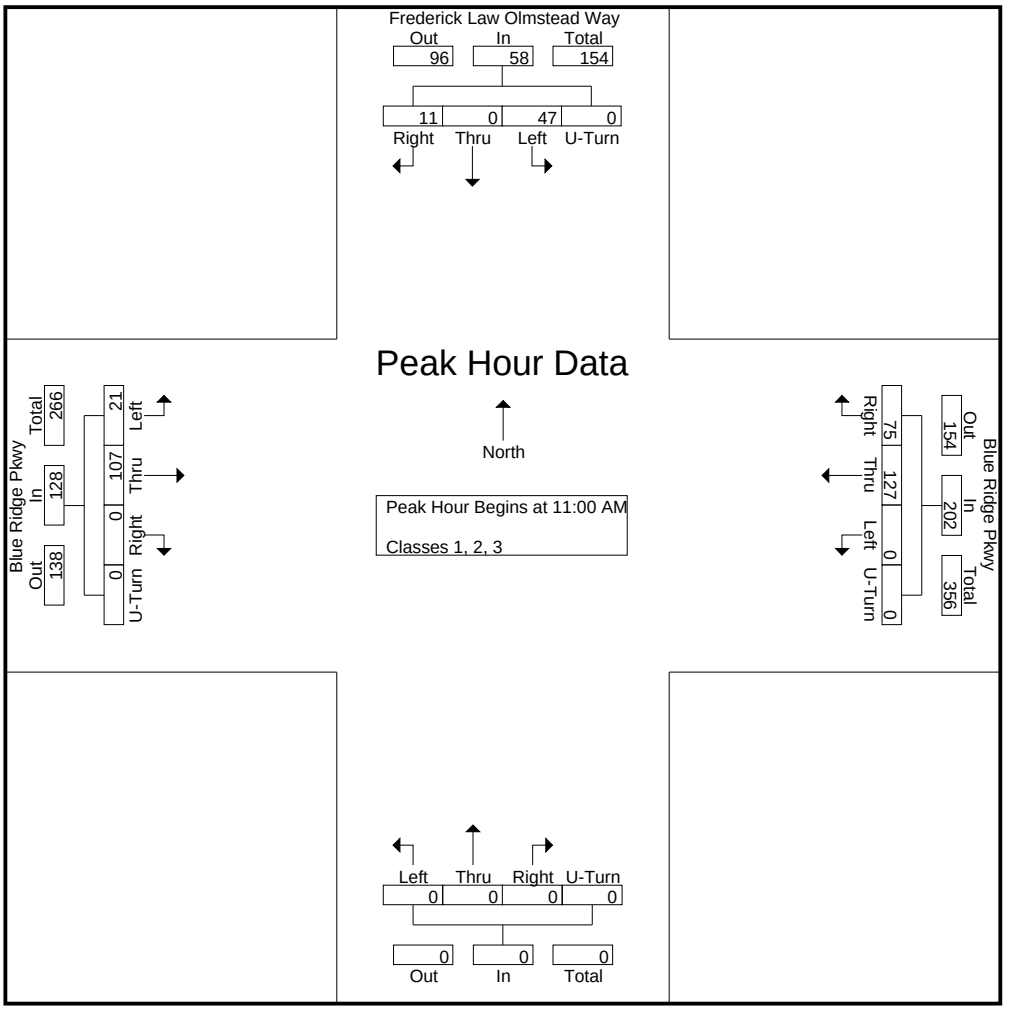

DocuSign Envelope ID: 5C03745C-4B01-4834-A65D-B77F558A4F46

Quality Counts

920 Blairhill Rd, Ste B-106
Charlotte, NC 28217

File Name : 15411710 - Frederick Law Olmstead Way -- Blue Ridge Pkwy
Site Code : 15411710
Start Date : 4/20/2021
Page No : 4

	Frederick Law Olmstead Way Southbound					Blue Ridge Pkwy Westbound					Northbound					Blue Ridge Pkwy Eastbound					
Start Time	Left	Thru	Right	U-Turn	App. Total	Left	Thru	Right	U-Turn	App. Total	Left	Thru	Right	U-Turn	App. Total	Left	Thru	Right	U-Turn	App. Total	Int. Total
Peak Hour Analysis From 12:00 PM to 06:45 PM - Peak 1 of 1																					
Peak Hour for Entire Intersection Begins at 04:00 PM																					
04:00 PM	14	0	**11**	0	25	0	39	**21**	0	**60**	0	0	0	0	0	**6**	60	0	**1**	**67**	**152**
04:15 PM	20	0	5	0	25	0	34	17	**1**	52	0	0	0	0	0	3	**62**	0	0	65	142
04:30 PM	**22**	0	8	0	**30**	0	39	10	0	49	0	0	0	0	0	3	46	0	0	49	128
04:45 PM	15	0	3	0	18	0	**46**	8	0	54	0	0	0	0	0	1	44	0	0	45	117
Total Volume	71	0	27	0	98	0	158	56	1	215	0	0	0	0	0	13	212	0	1	226	539
% App. Total	72.4	0	27.6	0		0	73.5	26	0.5		0	0	0	0		5.8	93.8	0	0.4		
PHF	.807	.000	.614	.000	.817	.000	.859	.667	.250	.896	.000	.000	.000	.000	.000	.542	.855	.000	.250	.843	.887

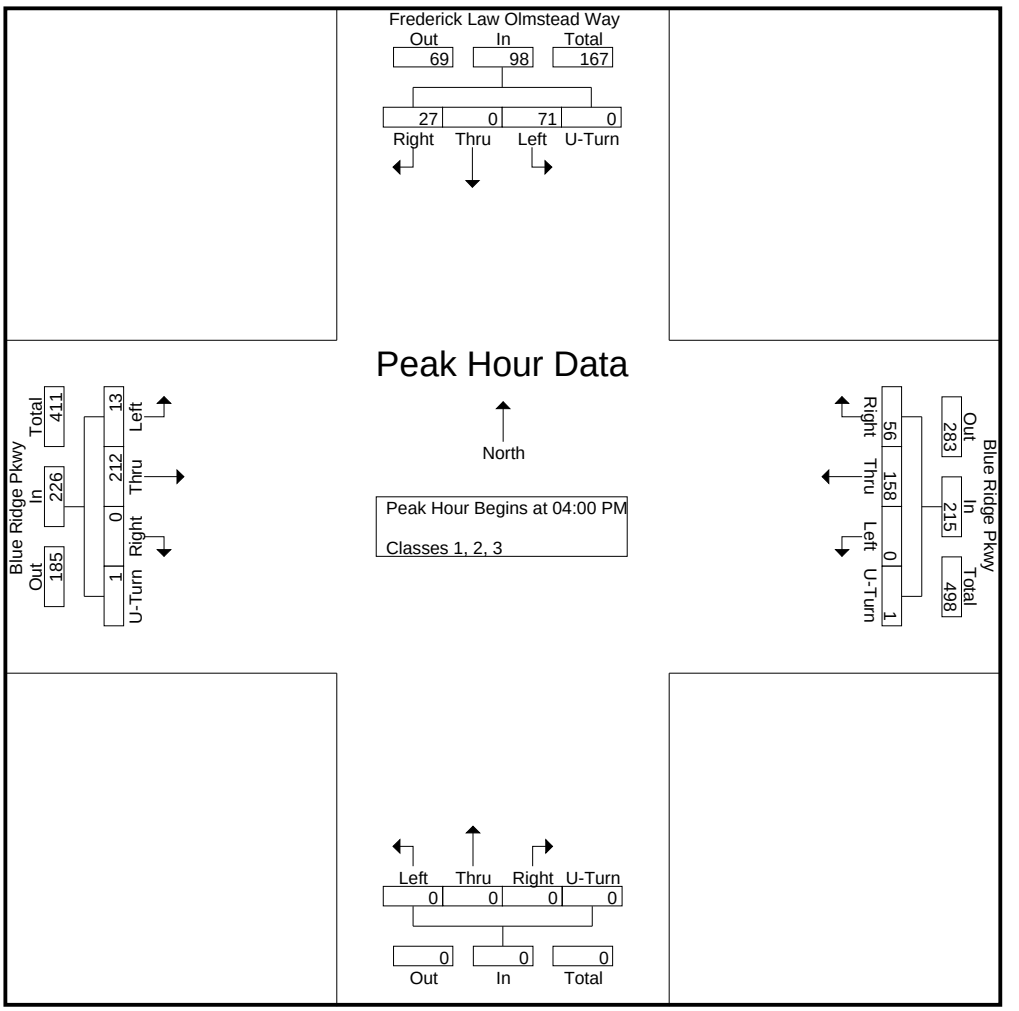

DocuSign Envelope ID: 5C03745C-4B01-4834-A65D-B77F558A4F46

Quality Counts

920 Blairhill Rd, Ste B-106
Charlotte, NC 28217

File Name : 15411710 - Frederick Law Olmstead Way -- Blue Ridge Pkwy
Site Code : 15411710
Start Date : 4/20/2021
Page No : 1

Groups Printed- Classes 4, 5, 6, 7

	Frederick Law Olmstead Way Southbound					Blue Ridge Pkwy Westbound					Northbound					Blue Ridge Pkwy Eastbound					
Start Time	Left	Thru	Right	U-Turn	App. Total	Left	Thru	Right	U-Turn	App. Total	Left	Thru	Right	U-Turn	App. Total	Left	Thru	Right	U-Turn	App. Total	Int. Total
06:00 AM	0	0	0	0	0	0	0	0	0	0	0	0	0	0	0	0	0	0	0	0	0
06:15 AM	0	0	0	0	0	0	0	0	0	0	0	0	0	0	0	0	0	0	0	0	0
06:30 AM	0	0	0	0	0	0	0	0	0	0	0	0	0	0	0	0	0	0	0	0	0
06:45 AM	0	0	0	0	0	0	0	0	0	0	0	0	0	0	0	0	0	0	0	0	0
Total	0	0	0	0	0	0	0	0	0	0	0	0	0	0	0	0	0	0	0	0	0
07:00 AM	0	0	0	0	0	0	0	0	0	0	0	0	0	0	0	0	0	0	0	0	0
07:15 AM	0	0	0	0	0	0	0	0	0	0	0	0	0	0	0	0	0	0	0	0	0
07:30 AM	0	0	0	0	0	0	0	0	0	0	0	0	0	0	0	0	0	0	0	0	0
07:45 AM	0	0	0	0	0	0	0	0	0	0	0	0	0	0	0	0	0	0	0	0	0
Total	0	0	0	0	0	0	0	0	0	0	0	0	0	0	0	0	0	0	0	0	0
08:00 AM	0	0	0	0	0	0	0	0	0	0	0	0	0	0	0	0	0	0	0	0	0
08:15 AM	0	0	0	0	0	0	0	0	0	0	0	0	0	0	0	0	0	0	0	0	0
08:30 AM	0	0	0	0	0	0	0	0	0	0	0	0	0	0	0	0	0	0	0	0	0
08:45 AM	0	0	0	0	0	0	0	0	0	0	0	0	0	0	0	0	0	0	0	0	0
Total	0	0	0	0	0	0	0	0	0	0	0	0	0	0	0	0	0	0	0	0	0
09:00 AM	0	0	0	0	0	0	0	0	0	0	0	0	0	0	0	0	0	0	0	0	0
09:15 AM	0	0	0	0	0	0	1	0	0	1	0	0	0	0	0	0	0	0	0	0	1
09:30 AM	0	0	0	0	0	0	0	0	0	0	0	0	0	0	0	0	0	0	0	0	0
09:45 AM	0	0	0	0	0	0	0	0	0	0	0	0	0	0	0	0	0	0	0	0	0
Total	0	0	0	0	0	0	1	0	0	1	0	0	0	0	0	0	0	0	0	0	1
10:00 AM	0	0	0	0	0	0	0	0	0	0	0	0	0	0	0	0	0	0	0	0	0
10:15 AM	0	0	0	0	0	0	1	0	0	1	0	0	0	0	0	0	1	0	0	1	2
10:30 AM	0	0	0	0	0	0	0	0	0	0	0	0	0	0	0	0	1	0	0	1	1
10:45 AM	0	0	0	0	0	0	1	1	0	2	0	0	0	0	0	0	0	0	0	0	2
Total	0	0	0	0	0	0	2	1	0	3	0	0	0	0	0	0	2	0	0	2	5
11:00 AM	0	0	0	0	0	0	0	1	1	2	0	0	0	0	0	0	0	0	0	0	2
11:15 AM	1	0	0	0	1	0	0	0	0	0	0	0	0	0	0	0	0	0	0	0	1
11:30 AM	0	0	0	0	0	0	0	0	0	0	0	0	0	0	0	0	0	0	0	0	0
11:45 AM	0	0	0	0	0	0	0	1	0	1	0	0	0	0	0	0	0	0	0	0	1
Total	1	0	0	0	1	0	0	2	1	3	0	0	0	0	0	0	0	0	0	0	4
12:00 PM	1	0	0	0	1	0	0	0	0	0	0	0	0	0	0	0	0	0	0	0	1
12:15 PM	0	0	0	0	0	0	0	0	0	0	0	0	0	0	0	0	0	0	0	0	0
12:30 PM	0	0	0	0	0	0	0	0	0	0	0	0	0	0	0	0	0	0	0	0	0
12:45 PM	1	0	0	0	1	0	0	2	0	2	0	0	0	0	0	0	0	0	0	0	3
Total	2	0	0	0	2	0	0	2	0	2	0	0	0	0	0	0	0	0	0	0	4
01:00 PM	1	0	0	0	1	0	0	1	0	1	0	0	0	0	0	0	0	0	0	0	2
01:15 PM	1	0	0	0	1	0	0	1	0	1	0	0	0	0	0	0	0	0	0	0	2
01:30 PM	0	0	0	0	0	0	0	0	0	0	0	0	0	0	0	0	0	0	0	0	0
01:45 PM	0	0	0	0	0	0	0	1	0	1	0	0	0	0	0	0	0	0	0	0	1
Total	2	0	0	0	2	0	0	3	0	3	0	0	0	0	0	0	0	0	0	0	5
02:00 PM	0	0	0	0	0	0	1	0	0	1	0	0	0	0	0	0	0	0	0	0	1
02:15 PM	1	0	0	0	1	0	0	0	0	0	0	0	0	0	0	0	0	0	0	0	1
02:30 PM	0	0	0	0	0	0	0	0	0	0	0	0	0	0	0	0	0	0	0	0	0
02:45 PM	1	0	0	0	1	0	0	0	0	0	0	0	0	0	0	0	0	0	0	0	1
Total	2	0	0	0	2	0	1	0	0	1	0	0	0	0	0	0	0	0	0	0	3
03:00 PM	0	0	0	0	0	0	2	0	0	2	0	0	0	0	0	0	0	0	0	0	2
03:15 PM	0	0	0	0	0	0	0	0	0	0	0	0	0	0	0	0	0	0	0	0	0
03:30 PM	0	0	0	0	0	0	0	0	0	0	0	0	0	0	0	0	0	0	0	0	0

DocuSign Envelope ID: 5C03745C-4B01-4834-A65D-B77F558A4F46

Quality Counts

920 Blairhill Rd, Ste B-106
Charlotte, NC 28217

File Name : 15411710 - Frederick Law Olmstead Way -- Blue Ridge Pkwy
Site Code : 15411710
Start Date : 4/20/2021

Groups Printed- Classes 4, 5, 6, 7

	Frederick Law Olmstead Way Southbound					Blue Ridge Pkwy Westbound					Northbound					Blue Ridge Pkwy Eastbound					
Start Time	Left	Thru	Right	U-Turn	App. Total	Left	Thru	Right	U-Turn	App. Total	Left	Thru	Right	U-Turn	App. Total	Left	Thru	Right	U-Turn	App. Total	Int. Total
03:45 PM	0	0	0	0	0	0	0	0	0	0	0	0	0	0	0	0	0	0	0	0	0
Total	0	0	0	0	0	0	2	0	0	2	0	0	0	0	0	0	0	0	0	0	2
04:00 PM	0	0	0	0	0	0	0	0	0	0	0	0	0	0	0	0	0	0	0	0	0
04:15 PM	0	0	0	0	0	0	0	0	0	0	0	0	0	0	0	0	0	0	0	0	0
04:30 PM	0	0	0	0	0	0	0	0	0	0	0	0	0	0	0	0	1	0	0	1	1
04:45 PM	0	0	0	0	0	0	0	0	0	0	0	0	0	0	0	0	2	0	0	2	2
Total	0	0	0	0	0	0	0	0	0	0	0	0	0	0	0	0	3	0	0	3	3
05:00 PM	0	0	0	0	0	0	0	0	0	0	0	0	0	0	0	0	0	0	0	0	0
05:15 PM	0	0	0	0	0	0	0	0	0	0	0	0	0	0	0	0	0	0	0	0	0
05:30 PM	0	0	0	0	0	0	1	0	0	1	0	0	0	0	0	0	0	0	0	0	1
05:45 PM	0	0	0	0	0	0	0	0	0	0	0	0	0	0	0	0	0	0	0	0	0
Total	0	0	0	0	0	0	1	0	0	1	0	0	0	0	0	0	0	0	0	0	1
06:00 PM	0	0	0	0	0	0	0	0	0	0	0	0	0	0	0	0	0	0	0	0	0
06:15 PM	0	0	0	0	0	0	0	0	0	0	0	0	0	0	0	0	0	0	0	0	0
06:30 PM	0	0	0	0	0	0	0	0	0	0	0	0	0	0	0	0	0	0	0	0	0
06:45 PM	0	0	0	0	0	0	0	0	0	0	0	0	0	0	0	0	0	0	0	0	0
Total	0	0	0	0	0	0	0	0	0	0	0	0	0	0	0	0	0	0	0	0	0
Grand Total	7	0	0	0	7	0	7	8	1	16	0	0	0	0	0	0	5	0	0	5	28
Apprch %	100	0	0	0		0	43.8	50	6.2		0	0	0	0		0	100	0	0		
Total %	25	0	0	0	25	0	25	28.6	3.6	57.1	0	0	0	0	0	0	17.9	0	0	17.9	

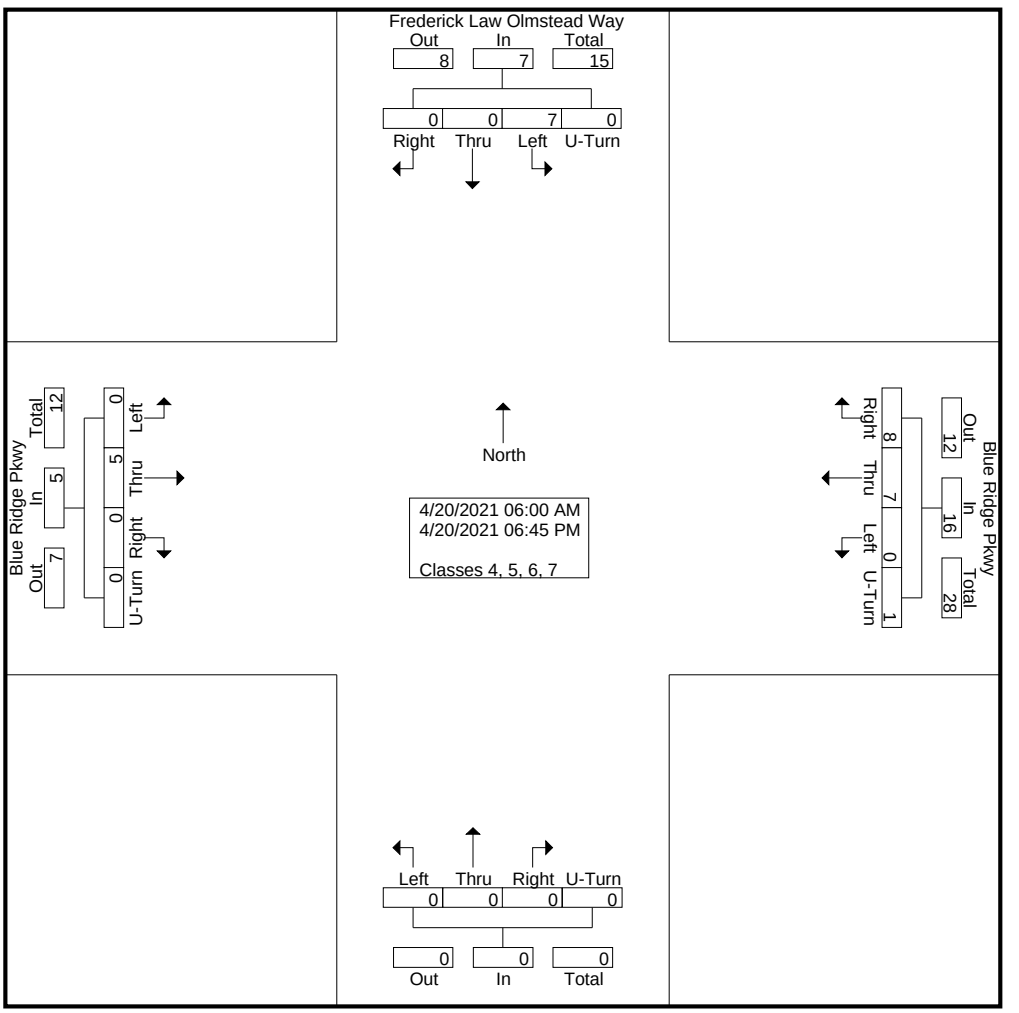

DocuSign Envelope ID: 5C03745C-4B01-4834-A65D-B77F558A4F46

Quality Counts

920 Blairhill Rd, Ste B-106
Charlotte, NC 28217

File Name : 15411710 - Frederick Law Olmstead Way -- Blue Ridge Pkwy
Site Code : 15411710
Start Date : 4/20/2021

	Frederick Law Olmstead Way Southbound					Blue Ridge Pkwy Westbound					Northbound					Blue Ridge Pkwy Eastbound					
Start Time	Left	Thru	Right	U-Turn	App. Total	Left	Thru	Right	U-Turn	App. Total	Left	Thru	Right	U-Turn	App. Total	Left	Thru	Right	U-Turn	App. Total	Int. Total
Peak Hour Analysis From 06:00 AM to 11:45 AM - Peak 1 of 1																					
Peak Hour for Entire Intersection Begins at 10:15 AM																					
10:15 AM	0	0	0	0	0	0	**1**	0	0	1	0	0	0	0	0	0	**1**	0	0	**1**	**2**
10:30 AM	0	0	0	0	0	0	0	0	0	0	0	0	0	0	0	0	1	0	0	1	1
10:45 AM	0	0	0	0	0	0	1	**1**	0	**2**	0	0	0	0	0	0	0	0	0	0	2
11:00 AM	0	0	0	0	0	0	0	1	**1**	2	0	0	0	0	0	0	0	0	0	0	2
Total Volume	0	0	0	0	0	0	2	2	1	5	0	0	0	0	0	0	2	0	0	2	7
% App. Total	0	0	0	0		0	40	40	20		0	0	0	0		0	100	0	0		
PHF	.000	.000	.000	.000	.000	.000	.500	.500	.250	.625	.000	.000	.000	.000	.000	.000	.500	.000	.000	.500	.875

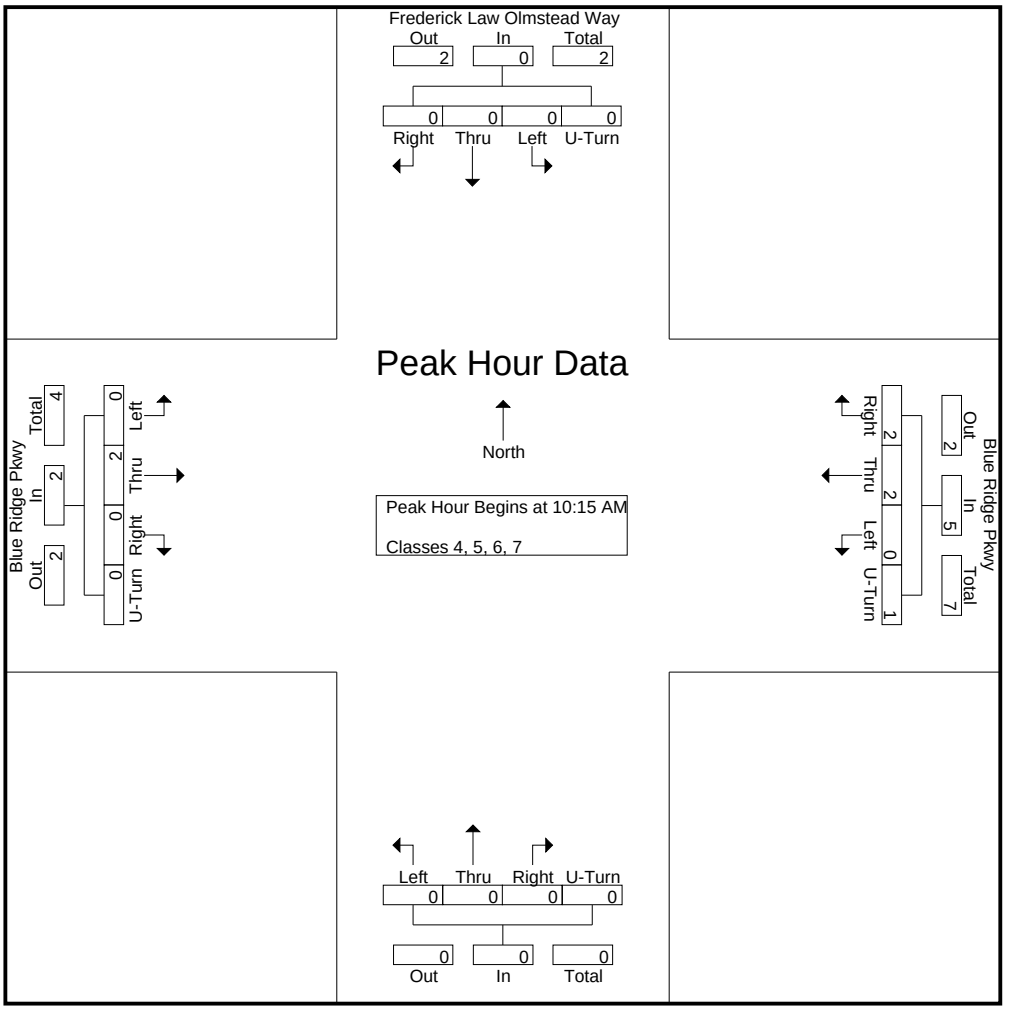

DocuSign Envelope ID: 5C03745C-4B01-4834-A65D-B77F558A4F46

Quality Counts

920 Blairhill Rd, Ste B-106
Charlotte, NC 28217

File Name : 15411710 - Frederick Law Olmstead Way -- Blue Ridge Pkwy
Site Code : 15411710
Start Date : 4/20/2021
Page No : 4

	Frederick Law Olmstead Way Southbound					Blue Ridge Pkwy Westbound					Northbound					Blue Ridge Pkwy Eastbound					
Start Time	Left	Thru	Right	U-Turn	App. Total	Left	Thru	Right	U-Turn	App. Total	Left	Thru	Right	U-Turn	App. Total	Left	Thru	Right	U-Turn	App. Total	Int. Total
Peak Hour Analysis From 12:00 PM to 06:45 PM - Peak 1 of 1																					
Peak Hour for Entire Intersection Begins at 12:30 PM																					
12:30 PM	0	0	0	0	0	0	0	0	0	0	0	0	0	0	0	0	0	0	0	0	0
12:45 PM	**1**	0	0	0	**1**	0	0	**2**	0	**2**	0	0	0	0	0	0	0	0	0	0	**3**
01:00 PM	1	0	0	0	1	0	0	1	0	1	0	0	0	0	0	0	0	0	0	0	2
01:15 PM	1	0	0	0	1	0	0	1	0	1	0	0	0	0	0	0	0	0	0	0	2
Total Volume	3	0	0	0	3	0	0	4	0	4	0	0	0	0	0	0	0	0	0	0	7
% App. Total	100	0	0	0		0	0	100	0		0	0	0	0		0	0	0	0		
PHF	.750	.000	.000	.000	.750	.000	.000	.500	.000	.500	.000	.000	.000	.000	.000	.000	.000	.000	.000	.000	.583

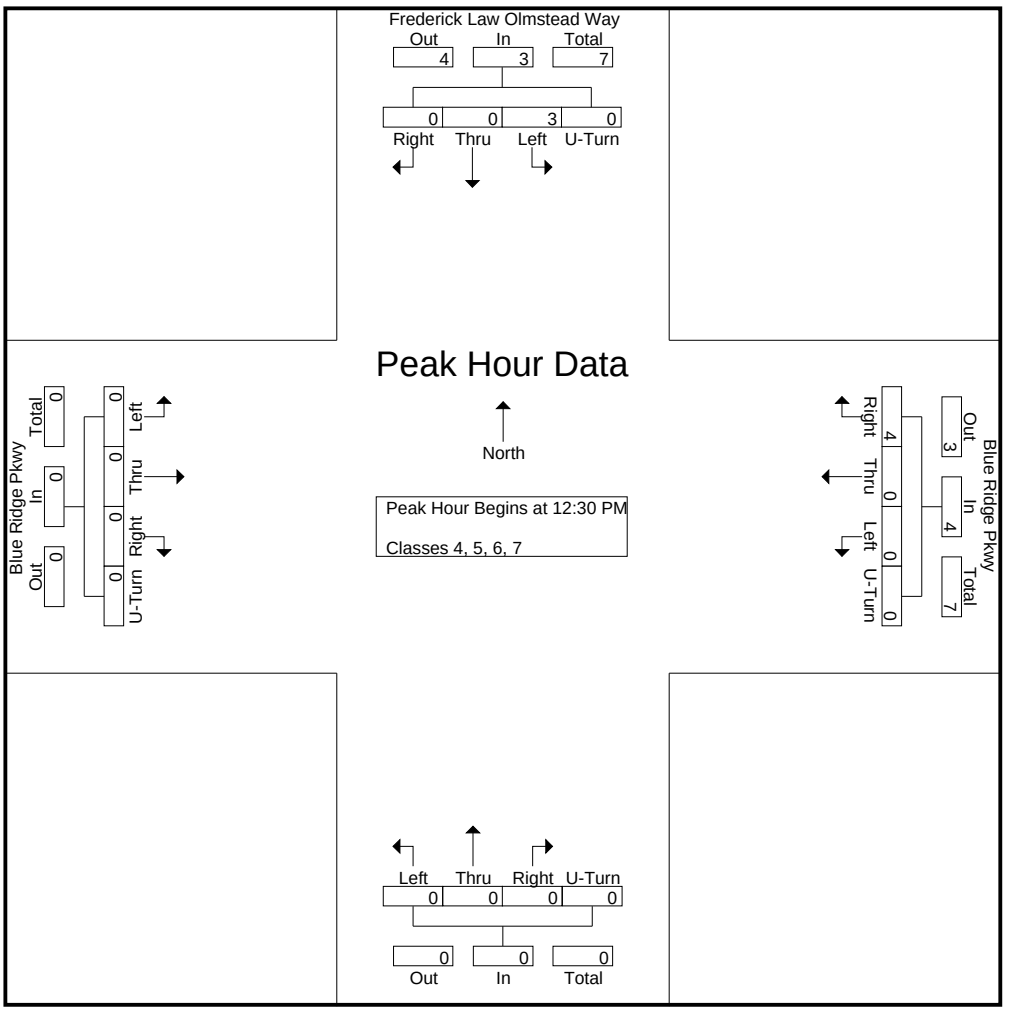

DocuSign Envelope ID: 5C03745C-4B01-4834-A65D-B77F558A4F46

Quality Counts

920 Blairhill Rd, Ste B-106
Charlotte, NC 28217

File Name : 15411710 - Frederick Law Olmstead Way -- Blue Ridge Pkwy
Site Code : 15411710
Start Date : 4/20/2021
Page No : 1

Groups Printed- Classes 8, 9, 10

	Frederick Law Olmstead Way Southbound					Blue Ridge Pkwy Westbound					Northbound					Blue Ridge Pkwy Eastbound					
Start Time	Left	Thru	Right	U-Turn	App. Total	Left	Thru	Right	U-Turn	App. Total	Left	Thru	Right	U-Turn	App. Total	Left	Thru	Right	U-Turn	App. Total	Int. Total
06:00 AM	0	0	0	0	0	0	0	0	0	0	0	0	0	0	0	0	0	0	0	0	0
06:15 AM	0	0	0	0	0	0	0	0	0	0	0	0	0	0	0	0	0	0	0	0	0
06:30 AM	0	0	0	0	0	0	0	0	0	0	0	0	0	0	0	0	0	0	0	0	0
06:45 AM	0	0	0	0	0	0	0	0	0	0	0	0	0	0	0	0	0	0	0	0	0
Total	0	0	0	0	0	0	0	0	0	0	0	0	0	0	0	0	0	0	0	0	0
07:00 AM	0	0	0	0	0	0	0	0	0	0	0	0	0	0	0	0	0	0	0	0	0
07:15 AM	0	0	0	0	0	0	0	0	0	0	0	0	0	0	0	0	0	0	0	0	0
07:30 AM	0	0	0	0	0	0	0	0	0	0	0	0	0	0	0	0	0	0	0	0	0
07:45 AM	0	0	0	0	0	0	0	0	0	0	0	0	0	0	0	0	0	0	0	0	0
Total	0	0	0	0	0	0	0	0	0	0	0	0	0	0	0	0	0	0	0	0	0
08:00 AM	0	0	0	0	0	0	0	0	0	0	0	0	0	0	0	0	0	0	0	0	0
08:15 AM	0	0	0	0	0	0	0	0	0	0	0	0	0	0	0	0	0	0	0	0	0
08:30 AM	0	0	0	0	0	0	0	0	0	0	0	0	0	0	0	0	0	0	0	0	0
08:45 AM	0	0	0	0	0	0	0	0	0	0	0	0	0	0	0	0	0	0	0	0	0
Total	0	0	0	0	0	0	0	0	0	0	0	0	0	0	0	0	0	0	0	0	0
09:00 AM	0	0	0	0	0	0	0	0	0	0	0	0	0	0	0	0	0	0	0	0	0
09:15 AM	0	0	0	0	0	0	0	0	0	0	0	0	0	0	0	0	0	0	0	0	0
09:30 AM	0	0	0	0	0	0	0	0	0	0	0	0	0	0	0	0	0	0	0	0	0
09:45 AM	0	0	0	0	0	0	0	0	0	0	0	0	0	0	0	0	0	0	0	0	0
Total	0	0	0	0	0	0	0	0	0	0	0	0	0	0	0	0	0	0	0	0	0
10:00 AM	0	0	0	0	0	0	0	0	0	0	0	0	0	0	0	0	0	0	0	0	0
10:15 AM	0	0	0	0	0	0	0	0	0	0	0	0	0	0	0	0	0	0	0	0	0
10:30 AM	0	0	0	0	0	0	0	0	0	0	0	0	0	0	0	0	0	0	0	0	0
10:45 AM	0	0	0	0	0	0	0	0	0	0	0	0	0	0	0	0	0	0	0	0	0
Total	0	0	0	0	0	0	0	0	0	0	0	0	0	0	0	0	0	0	0	0	0
11:00 AM	0	0	0	0	0	0	0	0	0	0	0	0	0	0	0	0	0	0	0	0	0
11:15 AM	0	0	0	0	0	0	0	0	0	0	0	0	0	0	0	0	0	0	0	0	0
11:30 AM	0	0	0	0	0	0	0	0	0	0	0	0	0	0	0	0	0	0	0	0	0
11:45 AM	0	0	0	0	0	0	0	0	0	0	0	0	0	0	0	0	0	0	0	0	0
Total	0	0	0	0	0	0	0	0	0	0	0	0	0	0	0	0	0	0	0	0	0
12:00 PM	0	0	0	0	0	0	0	0	0	0	0	0	0	0	0	0	0	0	0	0	0
12:15 PM	0	0	0	0	0	0	0	0	0	0	0	0	0	0	0	0	0	0	0	0	0
12:30 PM	0	0	0	0	0	0	0	0	0	0	0	0	0	0	0	0	0	0	0	0	0
12:45 PM	0	0	0	0	0	0	0	0	0	0	0	0	0	0	0	0	0	0	0	0	0
Total	0	0	0	0	0	0	0	0	0	0	0	0	0	0	0	0	0	0	0	0	0
01:00 PM	0	0	0	0	0	0	0	0	0	0	0	0	0	0	0	0	0	0	0	0	0
01:15 PM	0	0	0	0	0	0	0	0	0	0	0	0	0	0	0	0	0	0	0	0	0
01:30 PM	0	0	0	0	0	0	0	0	0	0	0	0	0	0	0	0	0	0	0	0	0
01:45 PM	0	0	0	0	0	0	0	0	0	0	0	0	0	0	0	0	0	0	0	0	0
Total	0	0	0	0	0	0	0	0	0	0	0	0	0	0	0	0	0	0	0	0	0
02:00 PM	0	0	0	0	0	0	0	0	0	0	0	0	0	0	0	0	0	0	0	0	0
02:15 PM	0	0	0	0	0	0	0	0	0	0	0	0	0	0	0	0	0	0	0	0	0
02:30 PM	0	0	0	0	0	0	0	0	0	0	0	0	0	0	0	0	0	0	0	0	0
02:45 PM	0	0	0	0	0	0	0	0	0	0	0	0	0	0	0	0	0	0	0	0	0
Total	0	0	0	0	0	0	0	0	0	0	0	0	0	0	0	0	0	0	0	0	0
03:00 PM	0	0	0	0	0	0	0	0	0	0	0	0	0	0	0	0	0	0	0	0	0
03:15 PM	0	0	0	0	0	0	0	0	0	0	0	0	0	0	0	0	0	0	0	0	0
03:30 PM	0	0	0	0	0	0	0	0	0	0	0	0	0	0	0	0	0	0	0	0	0

DocuSign Envelope ID: 5C03745C-4B01-4834-A65D-B77F558A4F46

Quality Counts

920 Blairhill Rd, Ste B-106
Charlotte, NC 28217

File Name : 15411710 - Frederick Law Olmstead Way -- Blue Ridge Pkwy
Site Code : 15411710
Start Date : 4/20/2021

Groups Printed- Classes 8, 9, 10

	Frederick Law Olmstead Way Southbound					Blue Ridge Pkwy Westbound					Northbound					Blue Ridge Pkwy Eastbound					
Start Time	Left	Thru	Right	U-Turn	App. Total	Left	Thru	Right	U-Turn	App. Total	Left	Thru	Right	U-Turn	App. Total	Left	Thru	Right	U-Turn	App. Total	Int. Total
03:45 PM	0	0	0	0	0	0	0	0	0	0	0	0	0	0	0	0	0	0	0	0	0
Total	0	0	0	0	0	0	0	0	0	0	0	0	0	0	0	0	0	0	0	0	0
04:00 PM	0	0	0	0	0	0	0	0	0	0	0	0	0	0	0	0	0	0	0	0	0
04:15 PM	0	0	0	0	0	0	0	0	0	0	0	0	0	0	0	0	0	0	0	0	0
04:30 PM	0	0	0	0	0	0	0	0	0	0	0	0	0	0	0	0	0	0	0	0	0
04:45 PM	0	0	0	0	0	0	0	0	0	0	0	0	0	0	0	0	0	0	0	0	0
Total	0	0	0	0	0	0	0	0	0	0	0	0	0	0	0	0	0	0	0	0	0
05:00 PM	0	0	0	0	0	0	0	0	0	0	0	0	0	0	0	0	0	0	0	0	0
05:15 PM	0	0	0	0	0	0	0	0	0	0	0	0	0	0	0	0	0	0	0	0	0
05:30 PM	0	0	0	0	0	0	0	0	0	0	0	0	0	0	0	0	0	0	0	0	0
05:45 PM	0	0	0	0	0	0	0	0	0	0	0	0	0	0	0	0	0	0	0	0	0
Total	0	0	0	0	0	0	0	0	0	0	0	0	0	0	0	0	0	0	0	0	0
06:00 PM	0	0	0	0	0	0	0	0	0	0	0	0	0	0	0	0	0	0	0	0	0
06:15 PM	0	0	0	0	0	0	0	0	0	0	0	0	0	0	0	0	0	0	0	0	0
06:30 PM	0	0	0	0	0	0	0	0	0	0	0	0	0	0	0	0	0	0	0	0	0
06:45 PM	0	0	0	0	0	0	0	0	0	0	0	0	0	0	0	0	0	0	0	0	0
Total	0	0	0	0	0	0	0	0	0	0	0	0	0	0	0	0	0	0	0	0	0
Grand Total	0	0	0	0	0	0	0	0	0	0	0	0	0	0	0	0	0	0	0	0	0
Apprch %	0	0	0	0		0	0	0	0		0	0	0	0		0	0	0	0		
Total %																					

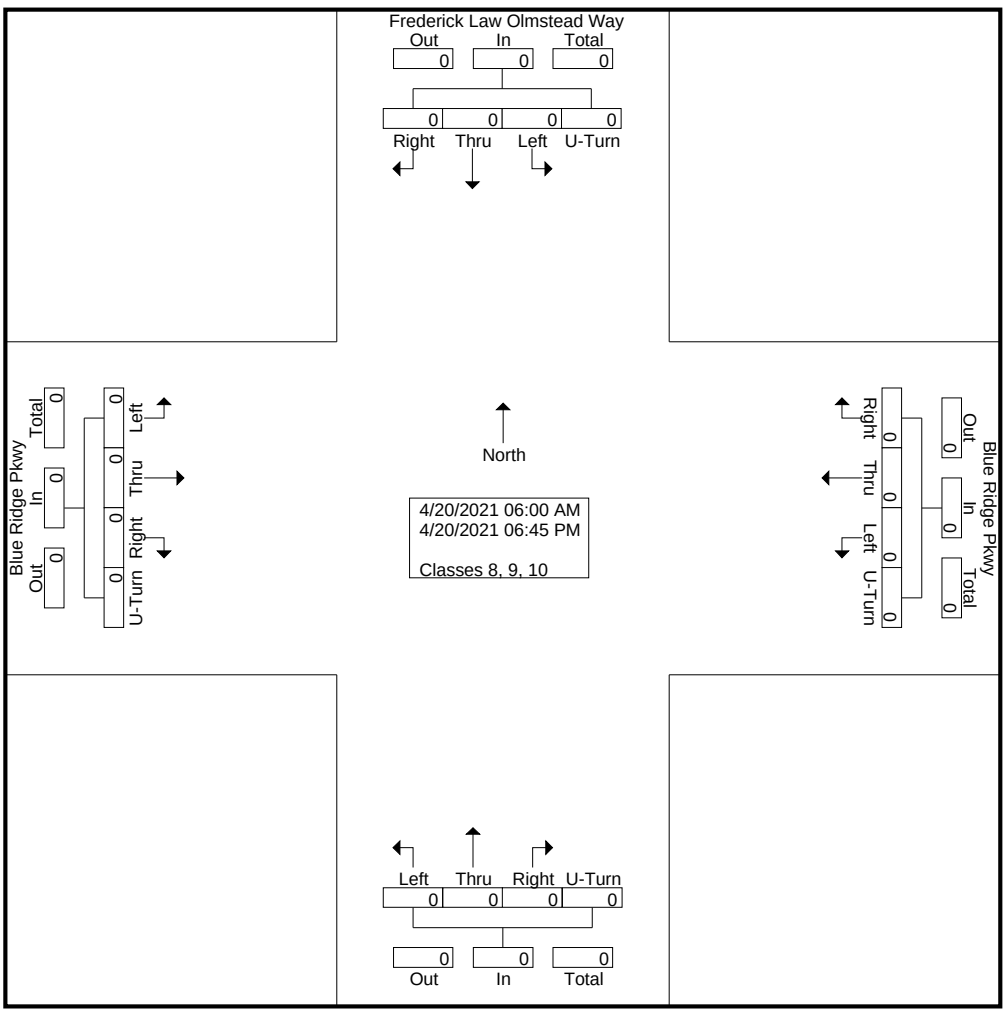

DocuSign Envelope ID: 5C03745C-4B01-4834-A65D-B77F558A4F46

Quality Counts

920 Blairhill Rd, Ste B-106
Charlotte, NC 28217

File Name : 15411710 - Frederick Law Olmstead Way -- Blue Ridge Pkwy
Site Code : 15411710
Start Date : 4/20/2021

	Frederick Law Olmstead Way Southbound					Blue Ridge Pkwy Westbound					Northbound					Blue Ridge Pkwy Eastbound					
Start Time	Left	Thru	Right	U-Turn	App. Total	Left	Thru	Right	U-Turn	App. Total	Left	Thru	Right	U-Turn	App. Total	Left	Thru	Right	U-Turn	App. Total	Int. Total
Peak Hour Analysis From 06:00 AM to 11:45 AM - Peak 1 of 1																					
Peak Hour for Entire Intersection Begins at 06:00 AM																					
06:00 AM	0	0	0	0	0	0	0	0	0	0	0	0	0	0	0	0	0	0	0	0	0
06:15 AM	0	0	0	0	0	0	0	0	0	0	0	0	0	0	0	0	0	0	0	0	0
06:30 AM	0	0	0	0	0	0	0	0	0	0	0	0	0	0	0	0	0	0	0	0	0
06:45 AM	0	0	0	0	0	0	0	0	0	0	0	0	0	0	0	0	0	0	0	0	0
Total Volume	0	0	0	0	0	0	0	0	0	0	0	0	0	0	0	0	0	0	0	0	0
% App. Total	0	0	0	0		0	0	0	0		0	0	0	0		0	0	0	0		
PHF	.000	.000	.000	.000	.000	.000	.000	.000	.000	.000	.000	.000	.000	.000	.000	.000	.000	.000	.000	.000	.000

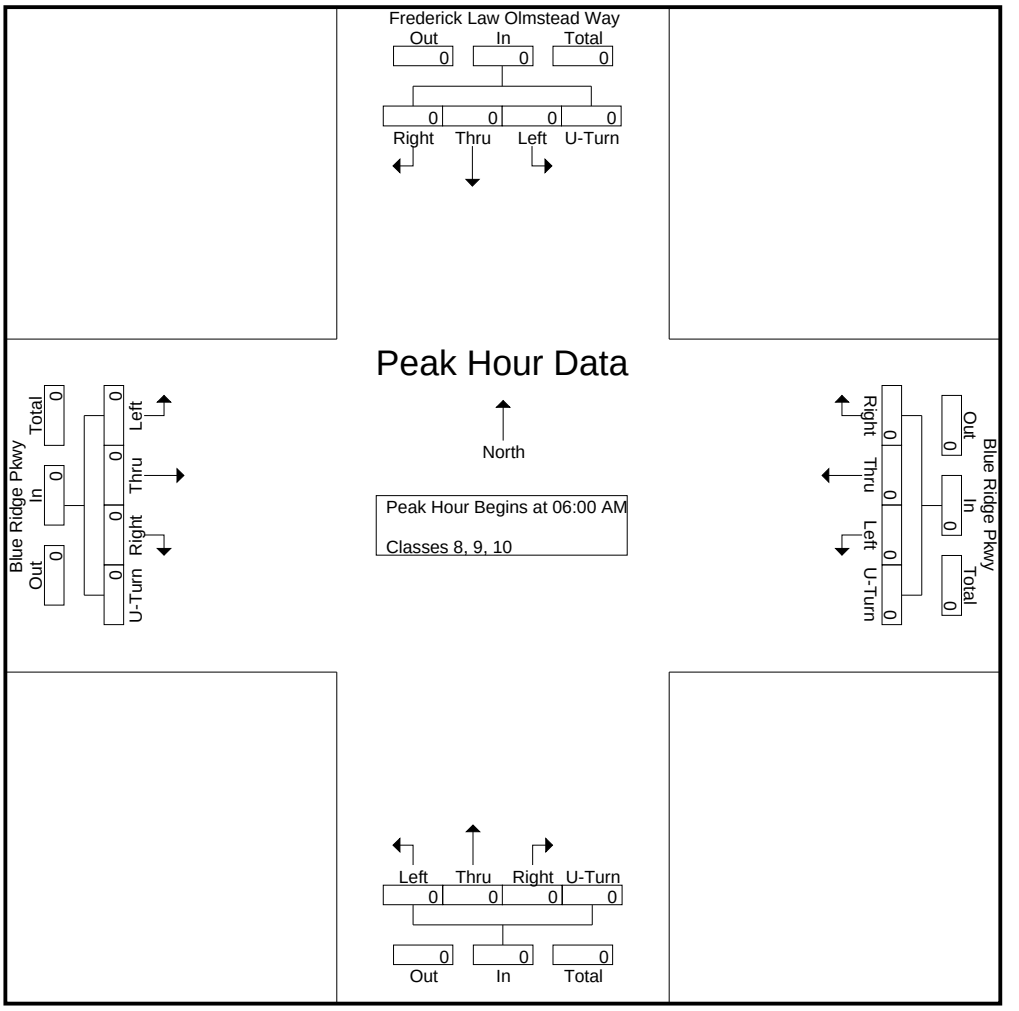

DocuSign Envelope ID: 5C03745C-4B01-4834-A65D-B77F558A4F46

Quality Counts

920 Blairhill Rd, Ste B-106
Charlotte, NC 28217

File Name : 15411710 - Frederick Law Olmstead Way -- Blue Ridge Pkwy
Site Code : 15411710
Start Date : 4/20/2021
Page No : 4

	Frederick Law Olmstead Way Southbound					Blue Ridge Pkwy Westbound					Northbound					Blue Ridge Pkwy Eastbound					
Start Time	Left	Thru	Right	U-Turn	App. Total	Left	Thru	Right	U-Turn	App. Total	Left	Thru	Right	U-Turn	App. Total	Left	Thru	Right	U-Turn	App. Total	Int. Total
Peak Hour Analysis From 12:00 PM to 06:45 PM - Peak 1 of 1																					
Peak Hour for Entire Intersection Begins at 12:00 PM																					
12:00 PM	0	0	0	0	0	0	0	0	0	0	0	0	0	0	0	0	0	0	0	0	0
12:15 PM	0	0	0	0	0	0	0	0	0	0	0	0	0	0	0	0	0	0	0	0	0
12:30 PM	0	0	0	0	0	0	0	0	0	0	0	0	0	0	0	0	0	0	0	0	0
12:45 PM	0	0	0	0	0	0	0	0	0	0	0	0	0	0	0	0	0	0	0	0	0
Total Volume	0	0	0	0	0	0	0	0	0	0	0	0	0	0	0	0	0	0	0	0	0
% App. Total	0	0	0	0		0	0	0	0		0	0	0	0		0	0	0	0		
PHF	.000	.000	.000	.000	.000	.000	.000	.000	.000	.000	.000	.000	.000	.000	.000	.000	.000	.000	.000	.000	.000

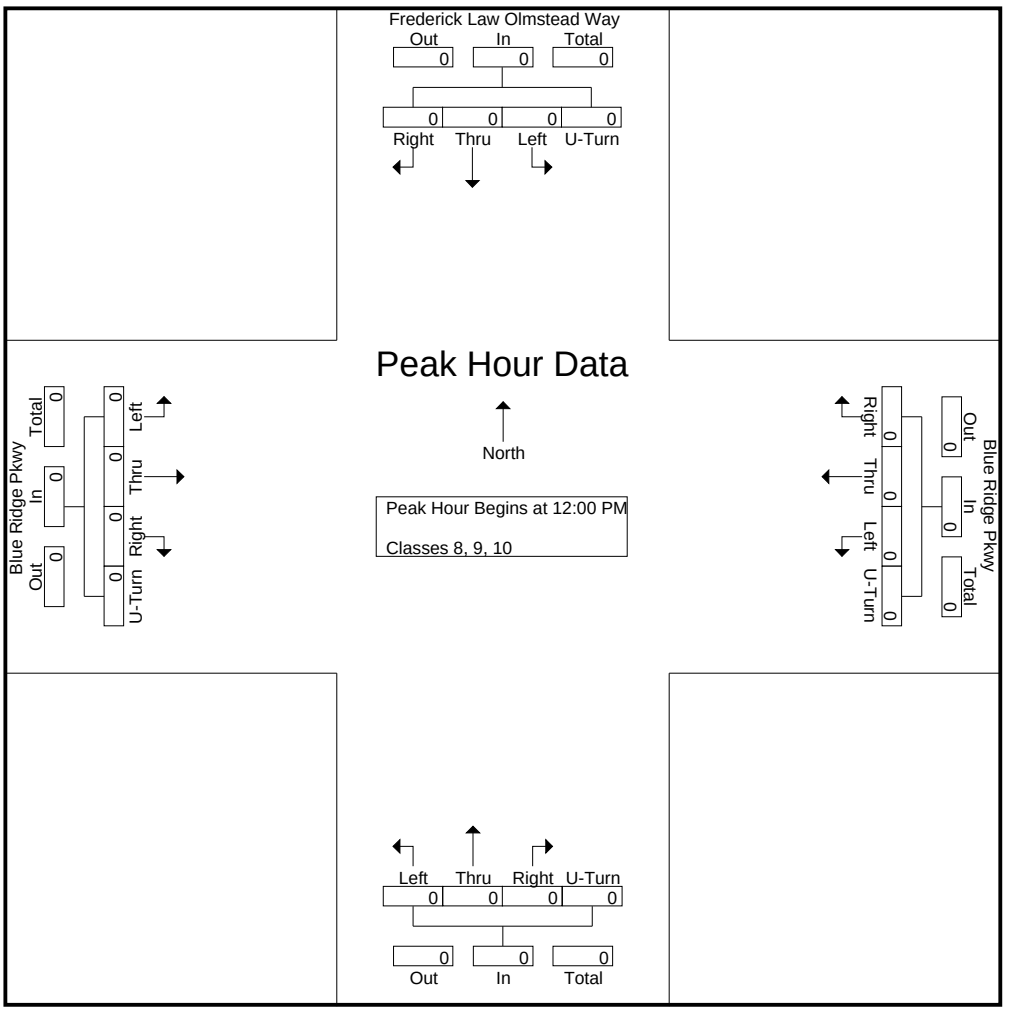

DocuSign Envelope ID: 5C03745C-4B01-4834-A65D-B77F558A4F46

Quality Counts

920 Blairhill Rd, Ste B-106
Charlotte, NC 28217

File Name : 15411710 - Frederick Law Olmstead Way -- Blue Ridge Pkwy
Site Code : 15411710
Start Date : 4/20/2021
Page No : 1

Groups Printed- Classes 11, 12, 13

	Frederick Law Olmstead Way Southbound					Blue Ridge Pkwy Westbound					Northbound					Blue Ridge Pkwy Eastbound					
Start Time	Left	Thru	Right	U-Turn	App. Total	Left	Thru	Right	U-Turn	App. Total	Left	Thru	Right	U-Turn	App. Total	Left	Thru	Right	U-Turn	App. Total	Int. Total
06:00 AM	0	0	0	0	0	0	0	0	0	0	0	0	0	0	0	0	0	0	0	0	0
06:15 AM	0	0	0	0	0	0	0	0	0	0	0	0	0	0	0	0	0	0	0	0	0
06:30 AM	0	0	0	0	0	0	0	0	0	0	0	0	0	0	0	0	0	0	0	0	0
06:45 AM	0	0	0	0	0	0	0	0	0	0	0	0	0	0	0	0	0	0	0	0	0
Total	0	0	0	0	0	0	0	0	0	0	0	0	0	0	0	0	0	0	0	0	0
07:00 AM	0	0	0	0	0	0	0	0	0	0	0	0	0	0	0	0	0	0	0	0	0
07:15 AM	0	0	0	0	0	0	0	0	0	0	0	0	0	0	0	0	0	0	0	0	0
07:30 AM	0	0	0	0	0	0	0	0	0	0	0	0	0	0	0	0	0	0	0	0	0
07:45 AM	0	0	0	0	0	0	0	0	0	0	0	0	0	0	0	0	0	0	0	0	0
Total	0	0	0	0	0	0	0	0	0	0	0	0	0	0	0	0	0	0	0	0	0
08:00 AM	0	0	0	0	0	0	0	0	0	0	0	0	0	0	0	0	0	0	0	0	0
08:15 AM	0	0	0	0	0	0	0	0	0	0	0	0	0	0	0	0	0	0	0	0	0
08:30 AM	0	0	0	0	0	0	0	0	0	0	0	0	0	0	0	0	0	0	0	0	0
08:45 AM	0	0	0	0	0	0	0	0	0	0	0	0	0	0	0	0	0	0	0	0	0
Total	0	0	0	0	0	0	0	0	0	0	0	0	0	0	0	0	0	0	0	0	0
09:00 AM	0	0	0	0	0	0	0	0	0	0	0	0	0	0	0	0	0	0	0	0	0
09:15 AM	0	0	0	0	0	0	0	0	0	0	0	0	0	0	0	0	0	0	0	0	0
09:30 AM	0	0	0	0	0	0	0	0	0	0	0	0	0	0	0	0	0	0	0	0	0
09:45 AM	0	0	0	0	0	0	0	0	0	0	0	0	0	0	0	0	0	0	0	0	0
Total	0	0	0	0	0	0	0	0	0	0	0	0	0	0	0	0	0	0	0	0	0
10:00 AM	0	0	0	0	0	0	0	0	0	0	0	0	0	0	0	0	0	0	0	0	0
10:15 AM	0	0	0	0	0	0	0	0	0	0	0	0	0	0	0	0	0	0	0	0	0
10:30 AM	0	0	0	0	0	0	0	0	0	0	0	0	0	0	0	0	0	0	0	0	0
10:45 AM	0	0	0	0	0	0	0	0	0	0	0	0	0	0	0	0	0	0	0	0	0
Total	0	0	0	0	0	0	0	0	0	0	0	0	0	0	0	0	0	0	0	0	0
11:00 AM	0	0	0	0	0	0	0	0	0	0	0	0	0	0	0	0	0	0	0	0	0
11:15 AM	0	0	0	0	0	0	0	0	0	0	0	0	0	0	0	0	0	0	0	0	0
11:30 AM	0	0	0	0	0	0	0	0	0	0	0	0	0	0	0	0	0	0	0	0	0
11:45 AM	0	0	0	0	0	0	0	0	0	0	0	0	0	0	0	0	0	0	0	0	0
Total	0	0	0	0	0	0	0	0	0	0	0	0	0	0	0	0	0	0	0	0	0
12:00 PM	0	0	0	0	0	0	0	0	0	0	0	0	0	0	0	0	0	0	0	0	0
12:15 PM	0	0	0	0	0	0	0	0	0	0	0	0	0	0	0	0	0	0	0	0	0
12:30 PM	0	0	0	0	0	0	0	0	0	0	0	0	0	0	0	0	0	0	0	0	0
12:45 PM	0	0	0	0	0	0	0	0	0	0	0	0	0	0	0	0	0	0	0	0	0
Total	0	0	0	0	0	0	0	0	0	0	0	0	0	0	0	0	0	0	0	0	0
01:00 PM	0	0	0	0	0	0	0	0	0	0	0	0	0	0	0	0	0	0	0	0	0
01:15 PM	0	0	0	0	0	0	0	0	0	0	0	0	0	0	0	0	0	0	0	0	0
01:30 PM	0	0	0	0	0	0	0	0	0	0	0	0	0	0	0	0	0	0	0	0	0
01:45 PM	0	0	0	0	0	0	0	0	0	0	0	0	0	0	0	0	0	0	0	0	0
Total	0	0	0	0	0	0	0	0	0	0	0	0	0	0	0	0	0	0	0	0	0
02:00 PM	0	0	0	0	0	0	0	0	0	0	0	0	0	0	0	0	0	0	0	0	0
02:15 PM	0	0	0	0	0	0	0	0	0	0	0	0	0	0	0	0	0	0	0	0	0
02:30 PM	0	0	0	0	0	0	0	0	0	0	0	0	0	0	0	0	0	0	0	0	0
02:45 PM	0	0	0	0	0	0	0	0	0	0	0	0	0	0	0	0	0	0	0	0	0
Total	0	0	0	0	0	0	0	0	0	0	0	0	0	0	0	0	0	0	0	0	0
03:00 PM	0	0	0	0	0	0	0	0	0	0	0	0	0	0	0	0	0	0	0	0	0
03:15 PM	0	0	0	0	0	0	0	0	0	0	0	0	0	0	0	0	0	0	0	0	0
03:30 PM	0	0	0	0	0	0	0	0	0	0	0	0	0	0	0	0	0	0	0	0	0

DocuSign Envelope ID: 5C03745C-4B01-4834-A65D-B77F558A4F46

Quality Counts

920 Blairhill Rd, Ste B-106
Charlotte, NC 28217

File Name : 15411710 - Frederick Law Olmstead Way -- Blue Ridge Pkwy
Site Code : 15411710
Start Date : 4/20/2021

Groups Printed- Classes 11, 12, 13

	Frederick Law Olmstead Way Southbound					Blue Ridge Pkwy Westbound					Northbound					Blue Ridge Pkwy Eastbound					
Start Time	Left	Thru	Right	U-Turn	App. Total	Left	Thru	Right	U-Turn	App. Total	Left	Thru	Right	U-Turn	App. Total	Left	Thru	Right	U-Turn	App. Total	Int. Total
03:45 PM	0	0	0	0	0	0	0	0	0	0	0	0	0	0	0	0	0	0	0	0	0
Total	0	0	0	0	0	0	0	0	0	0	0	0	0	0	0	0	0	0	0	0	0
04:00 PM	0	0	0	0	0	0	0	0	0	0	0	0	0	0	0	0	0	0	0	0	0
04:15 PM	0	0	0	0	0	0	0	0	0	0	0	0	0	0	0	0	0	0	0	0	0
04:30 PM	0	0	0	0	0	0	0	0	0	0	0	0	0	0	0	0	0	0	0	0	0
04:45 PM	0	0	0	0	0	0	0	0	0	0	0	0	0	0	0	0	0	0	0	0	0
Total	0	0	0	0	0	0	0	0	0	0	0	0	0	0	0	0	0	0	0	0	0
05:00 PM	0	0	0	0	0	0	0	0	0	0	0	0	0	0	0	0	0	0	0	0	0
05:15 PM	0	0	0	0	0	0	0	0	0	0	0	0	0	0	0	0	0	0	0	0	0
05:30 PM	0	0	0	0	0	0	0	0	0	0	0	0	0	0	0	0	0	0	0	0	0
05:45 PM	0	0	0	0	0	0	0	0	0	0	0	0	0	0	0	0	0	0	0	0	0
Total	0	0	0	0	0	0	0	0	0	0	0	0	0	0	0	0	0	0	0	0	0
06:00 PM	0	0	0	0	0	0	0	0	0	0	0	0	0	0	0	0	0	0	0	0	0
06:15 PM	0	0	0	0	0	0	0	0	0	0	0	0	0	0	0	0	0	0	0	0	0
06:30 PM	0	0	0	0	0	0	0	0	0	0	0	0	0	0	0	0	0	0	0	0	0
06:45 PM	0	0	0	0	0	0	0	0	0	0	0	0	0	0	0	0	0	0	0	0	0
Total	0	0	0	0	0	0	0	0	0	0	0	0	0	0	0	0	0	0	0	0	0
Grand Total	0	0	0	0	0	0	0	0	0	0	0	0	0	0	0	0	0	0	0	0	0
Apprch %	0	0	0	0		0	0	0	0		0	0	0	0		0	0	0	0		
Total %																					

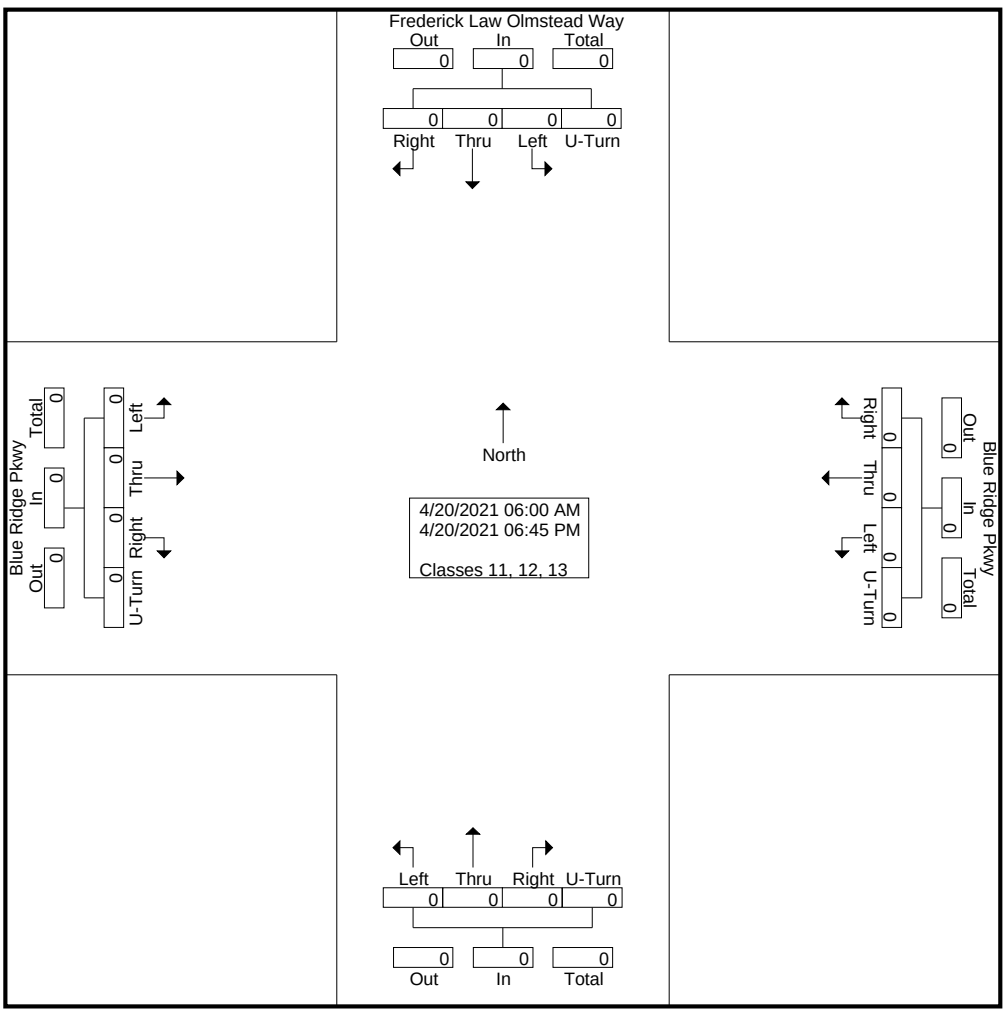

DocuSign Envelope ID: 5C03745C-4B01-4834-A65D-B77F558A4F46

Quality Counts

920 Blairhill Rd, Ste B-106
Charlotte, NC 28217

File Name : 15411710 - Frederick Law Olmstead Way -- Blue Ridge Pkwy
Site Code : 15411710
Start Date : 4/20/2021

	Frederick Law Olmstead Way Southbound					Blue Ridge Pkwy Westbound					Northbound					Blue Ridge Pkwy Eastbound					
Start Time	Left	Thru	Right	U-Turn	App. Total	Left	Thru	Right	U-Turn	App. Total	Left	Thru	Right	U-Turn	App. Total	Left	Thru	Right	U-Turn	App. Total	Int. Total
Peak Hour Analysis From 06:00 AM to 11:45 AM - Peak 1 of 1																					
Peak Hour for Entire Intersection Begins at 06:00 AM																					
06:00 AM	0	0	0	0	0	0	0	0	0	0	0	0	0	0	0	0	0	0	0	0	0
06:15 AM	0	0	0	0	0	0	0	0	0	0	0	0	0	0	0	0	0	0	0	0	0
06:30 AM	0	0	0	0	0	0	0	0	0	0	0	0	0	0	0	0	0	0	0	0	0
06:45 AM	0	0	0	0	0	0	0	0	0	0	0	0	0	0	0	0	0	0	0	0	0
Total Volume	0	0	0	0	0	0	0	0	0	0	0	0	0	0	0	0	0	0	0	0	0
% App. Total	0	0	0	0		0	0	0	0		0	0	0	0		0	0	0	0		
PHF	.000	.000	.000	.000	.000	.000	.000	.000	.000	.000	.000	.000	.000	.000	.000	.000	.000	.000	.000	.000	.000

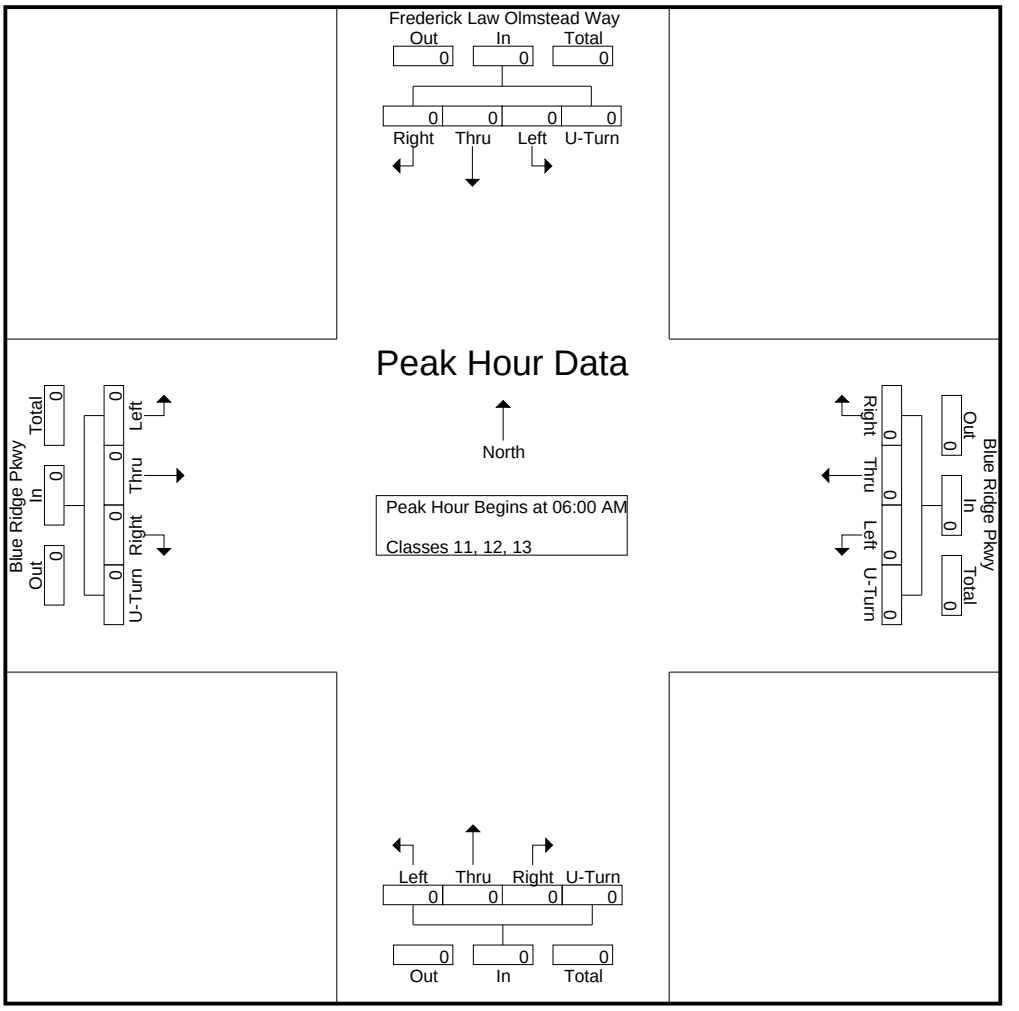

DocuSign Envelope ID: 5C03745C-4B01-4834-A65D-B77F558A4F46

Quality Counts

920 Blairhill Rd, Ste B-106
Charlotte, NC 28217

File Name : 15411710 - Frederick Law Olmstead Way -- Blue Ridge Pkwy
Site Code : 15411710
Start Date : 4/20/2021
Page No : 4

	Frederick Law Olmstead Way Southbound					Blue Ridge Pkwy Westbound					Northbound					Blue Ridge Pkwy Eastbound					
Start Time	Left	Thru	Right	U-Turn	App. Total	Left	Thru	Right	U-Turn	App. Total	Left	Thru	Right	U-Turn	App. Total	Left	Thru	Right	U-Turn	App. Total	Int. Total
Peak Hour Analysis From 12:00 PM to 06:45 PM - Peak 1 of 1																					
Peak Hour for Entire Intersection Begins at 12:00 PM																					
12:00 PM	0	0	0	0	0	0	0	0	0	0	0	0	0	0	0	0	0	0	0	0	0
12:15 PM	0	0	0	0	0	0	0	0	0	0	0	0	0	0	0	0	0	0	0	0	0
12:30 PM	0	0	0	0	0	0	0	0	0	0	0	0	0	0	0	0	0	0	0	0	0
12:45 PM	0	0	0	0	0	0	0	0	0	0	0	0	0	0	0	0	0	0	0	0	0
Total Volume	0	0	0	0	0	0	0	0	0	0	0	0	0	0	0	0	0	0	0	0	0
% App. Total	0	0	0	0		0	0	0	0		0	0	0	0		0	0	0	0		
PHF	.000	.000	.000	.000	.000	.000	.000	.000	.000	.000	.000	.000	.000	.000	.000	.000	.000	.000	.000	.000	.000

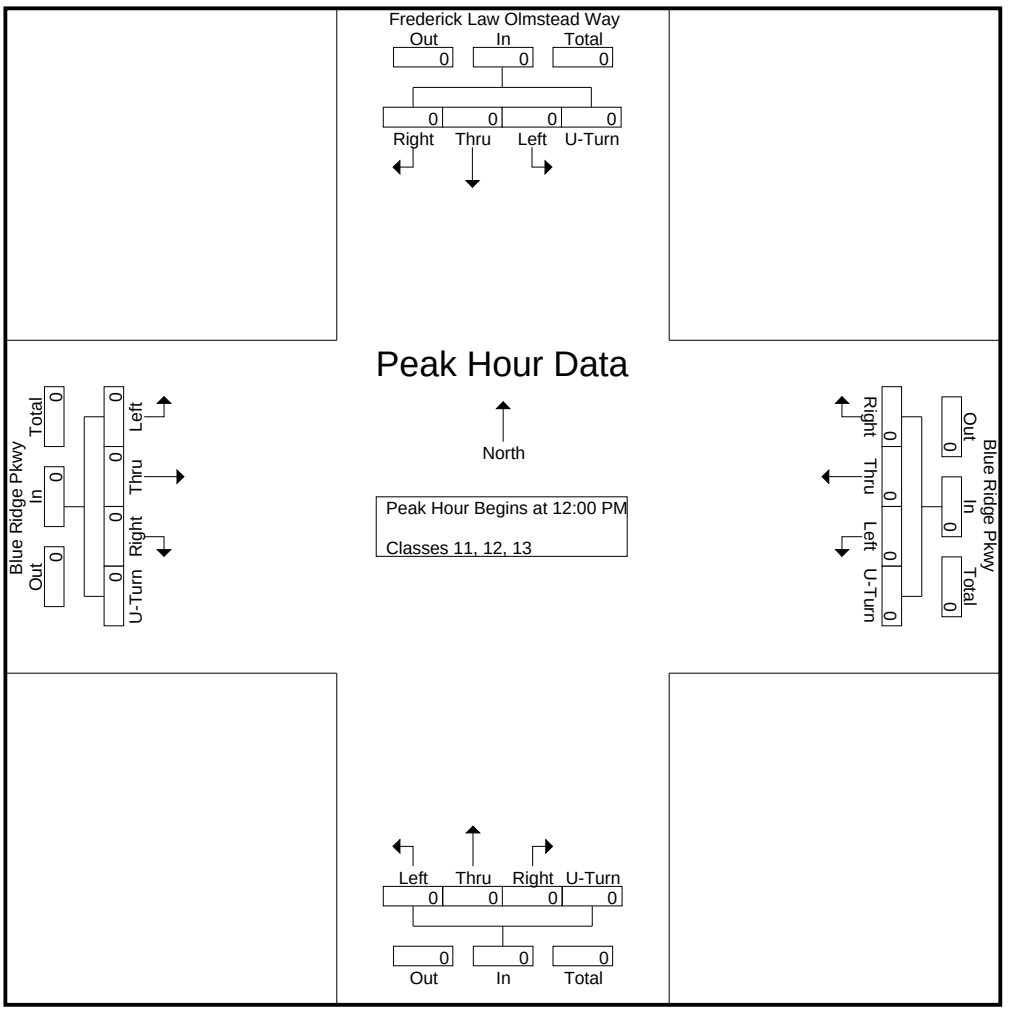

DocuSign Envelope ID: 5C03745C-4B01-4834-A65D-B77F558A4F46

Quality Counts

920 Blairhill Rd, Ste B-106
Charlotte, NC 28217

File Name : 15411710 - Frederick Law Olmstead Way -- Blue Ridge Pkwy
Site Code : 15411710
Start Date : 4/20/2021
Page No : 1

Groups Printed- Bikes, Peds

	Frederick Law Olmstead Way Southbound					Blue Ridge Pkwy Westbound					Northbound					Blue Ridge Pkwy Eastbound					
Start Time	Left	Thru	Right	Peds	App. Total	Left	Thru	Right	Peds	App. Total	Left	Thru	Right	Peds	App. Total	Left	Thru	Right	Peds	App. Total	Int. Total
06:00 AM	0	0	0	0	0	0	0	0	0	0	0	0	0	0	0	0	0	0	0	0	0
06:15 AM	0	0	0	0	0	0	0	0	0	0	0	0	0	0	0	0	0	0	0	0	0
06:30 AM	0	0	0	0	0	0	0	0	0	0	0	0	0	0	0	0	0	0	0	0	0
06:45 AM	0	0	0	0	0	0	0	0	0	0	0	0	0	0	0	0	0	0	0	0	0
Total	0	0	0	0	0	0	0	0	0	0	0	0	0	0	0	0	0	0	0	0	0
07:00 AM	0	0	0	0	0	0	0	0	0	0	0	0	0	0	0	0	0	0	0	0	0
07:15 AM	0	0	0	0	0	0	0	0	0	0	0	0	0	0	0	0	0	0	0	0	0
07:30 AM	0	0	0	0	0	0	0	0	0	0	0	0	0	0	0	0	0	0	0	0	0
07:45 AM	0	0	0	0	0	0	0	0	0	0	0	0	0	0	0	0	0	0	2	2	2
Total	0	0	0	0	0	0	0	0	0	0	0	0	0	0	0	0	0	0	2	2	2
08:00 AM	0	0	0	0	0	0	0	0	0	0	0	0	0	0	0	0	0	0	0	0	0
08:15 AM	0	0	0	0	0	0	0	0	0	0	0	0	0	0	0	0	0	0	0	0	0
08:30 AM	0	0	0	0	0	0	0	0	0	0	0	0	0	0	0	0	0	0	2	2	2
08:45 AM	0	0	0	0	0	0	0	0	0	0	0	0	0	0	0	0	0	0	0	0	0
Total	0	0	0	0	0	0	0	0	0	0	0	0	0	0	0	0	0	0	2	2	2
09:00 AM	0	0	0	0	0	0	0	0	0	0	0	0	0	0	0	0	0	0	0	0	0
09:15 AM	0	0	0	0	0	0	0	0	0	0	0	0	0	0	0	0	0	0	0	0	0
09:30 AM	0	0	0	0	0	0	0	0	0	0	0	0	0	0	0	0	0	0	0	0	0
09:45 AM	0	0	0	0	0	0	0	0	0	0	0	0	0	0	0	0	0	0	0	0	0
Total	0	0	0	0	0	0	0	0	0	0	0	0	0	0	0	0	0	0	0	0	0
10:00 AM	0	0	0	0	0	0	0	0	0	0	0	0	0	0	0	0	0	0	0	0	0
10:15 AM	0	0	0	0	0	0	0	0	0	0	0	0	0	0	0	0	2	0	0	2	2
10:30 AM	0	0	0	0	0	0	0	0	0	0	0	0	0	0	0	1	0	0	0	1	1
10:45 AM	0	0	0	0	0	0	0	0	0	0	0	0	0	0	0	1	0	0	0	1	1
Total	0	0	0	0	0	0	0	0	0	0	0	0	0	0	0	2	2	0	0	4	4
11:00 AM	0	0	0	0	0	0	0	0	0	0	0	0	0	0	0	0	0	0	0	0	0
11:15 AM	0	0	0	0	0	0	0	0	0	0	0	0	0	0	0	0	0	0	0	0	0
11:30 AM	0	0	0	0	0	0	0	0	0	0	0	0	0	0	0	0	0	0	0	0	0
11:45 AM	0	0	0	0	0	0	0	0	0	0	0	0	0	0	0	1	0	0	0	1	1
Total	0	0	0	0	0	0	0	0	0	0	0	0	0	0	0	1	0	0	0	1	1
12:00 PM	0	0	0	0	0	0	0	0	0	0	0	0	0	0	0	1	0	0	0	1	1
12:15 PM	0	0	0	0	0	0	0	0	0	0	0	0	0	0	0	0	0	0	0	0	0
12:30 PM	2	0	0	0	2	0	0	0	0	0	0	0	0	0	0	0	0	0	0	0	2
12:45 PM	0	0	0	0	0	0	0	0	0	0	0	0	0	0	0	0	0	0	0	0	0
Total	2	0	0	0	2	0	0	0	0	0	0	0	0	0	0	1	0	0	0	1	3
01:00 PM	0	0	0	0	0	0	0	0	0	0	0	0	0	0	0	0	0	0	0	0	0
01:15 PM	0	0	0	0	0	0	0	0	0	0	0	0	0	0	0	0	0	0	1	1	1
01:30 PM	0	0	1	0	1	0	0	0	0	0	0	0	0	0	0	0	0	0	0	0	1
01:45 PM	0	0	0	0	0	0	0	0	0	0	0	0	0	0	0	1	0	0	2	3	3
Total	0	0	1	0	1	0	0	0	0	0	0	0	0	0	0	1	0	0	3	4	5
02:00 PM	0	0	0	0	0	0	0	0	0	0	0	0	0	0	0	0	0	0	0	0	0
02:15 PM	0	0	0	0	0	0	0	0	0	0	0	0	0	0	0	0	0	0	0	0	0
02:30 PM	0	0	0	0	0	0	0	0	0	0	0	0	0	0	0	0	0	0	0	0	0
02:45 PM	0	0	0	0	0	0	0	0	0	0	0	0	0	0	0	0	0	0	0	0	0
Total	0	0	0	0	0	0	0	0	0	0	0	0	0	0	0	0	0	0	0	0	0
03:00 PM	0	0	0	0	0	0	0	1	0	1	0	0	0	0	0	0	0	0	0	0	1
03:15 PM	0	0	0	0	0	0	0	0	0	0	0	0	0	0	0	0	0	0	0	0	0
03:30 PM	0	0	0	0	0	0	0	0	0	0	0	0	0	0	0	0	0	0	0	0	0

DocuSign Envelope ID: 5C03745C-4B01-4834-A65D-B77F558A4F46

Quality Counts

920 Blairhill Rd, Ste B-106
Charlotte, NC 28217

File Name : 15411710 - Frederick Law Olmstead Way -- Blue Ridge Pkwy
Site Code : 15411710
Start Date : 4/20/2021

Groups Printed- Bikes, Peds

	Frederick Law Olmstead Way Southbound					Blue Ridge Pkwy Westbound					Northbound					Blue Ridge Pkwy Eastbound					
Start Time	Left	Thru	Right	Peds	App. Total	Left	Thru	Right	Peds	App. Total	Left	Thru	Right	Peds	App. Total	Left	Thru	Right	Peds	App. Total	Int. Total
03:45 PM	0	0	1	0	1	0	0	0	0	0	0	0	0	0	0	0	0	0	0	0	1
Total	0	0	1	0	1	0	0	1	0	1	0	0	0	0	0	0	0	0	0	0	2
04:00 PM	0	0	0	0	0	0	0	0	0	0	0	0	0	0	0	1	0	0	1	2	2
04:15 PM	1	0	0	0	1	0	0	0	0	0	0	0	0	0	0	0	0	0	1	1	2
04:30 PM	0	0	0	1	1	0	0	0	0	0	0	0	0	0	0	0	0	0	0	0	1
04:45 PM	0	0	0	0	0	0	0	0	0	0	0	0	0	0	0	0	0	0	1	1	1
Total	1	0	0	1	2	0	0	0	0	0	0	0	0	0	0	1	0	0	3	4	6
05:00 PM	0	0	0	0	0	0	0	0	0	0	0	0	0	0	0	0	0	0	0	0	0
05:15 PM	1	0	0	0	1	0	0	2	0	2	0	0	0	0	0	0	0	0	0	0	3
05:30 PM	0	0	0	0	0	0	0	0	0	0	0	0	0	0	0	0	0	0	0	0	0
05:45 PM	0	0	0	0	0	0	0	1	0	1	0	0	0	0	0	0	0	0	2	2	3
Total	1	0	0	0	1	0	0	3	0	3	0	0	0	0	0	0	0	0	2	2	6
06:00 PM	0	0	0	0	0	0	0	0	0	0	0	0	0	0	0	0	0	0	0	0	0
06:15 PM	0	0	0	0	0	0	0	0	0	0	0	0	0	0	0	1	0	0	1	2	2
06:30 PM	0	0	0	0	0	0	0	0	0	0	0	0	0	0	0	0	0	0	0	0	0
06:45 PM	0	0	0	0	0	0	0	0	0	0	0	0	0	0	0	0	0	0	1	1	1
Total	0	0	0	0	0	0	0	0	0	0	0	0	0	0	0	1	0	0	2	3	3
Grand Total	4	0	2	1	7	0	0	4	0	4	0	0	0	0	0	7	2	0	14	23	34
Apprch %	57.1	0	28.6	14.3		0	0	100	0		0	0	0	0		30.4	8.7	0	60.9		
Total %	11.8	0	5.9	2.9	20.6	0	0	11.8	0	11.8	0	0	0	0	0	20.6	5.9	0	41.2	67.6	

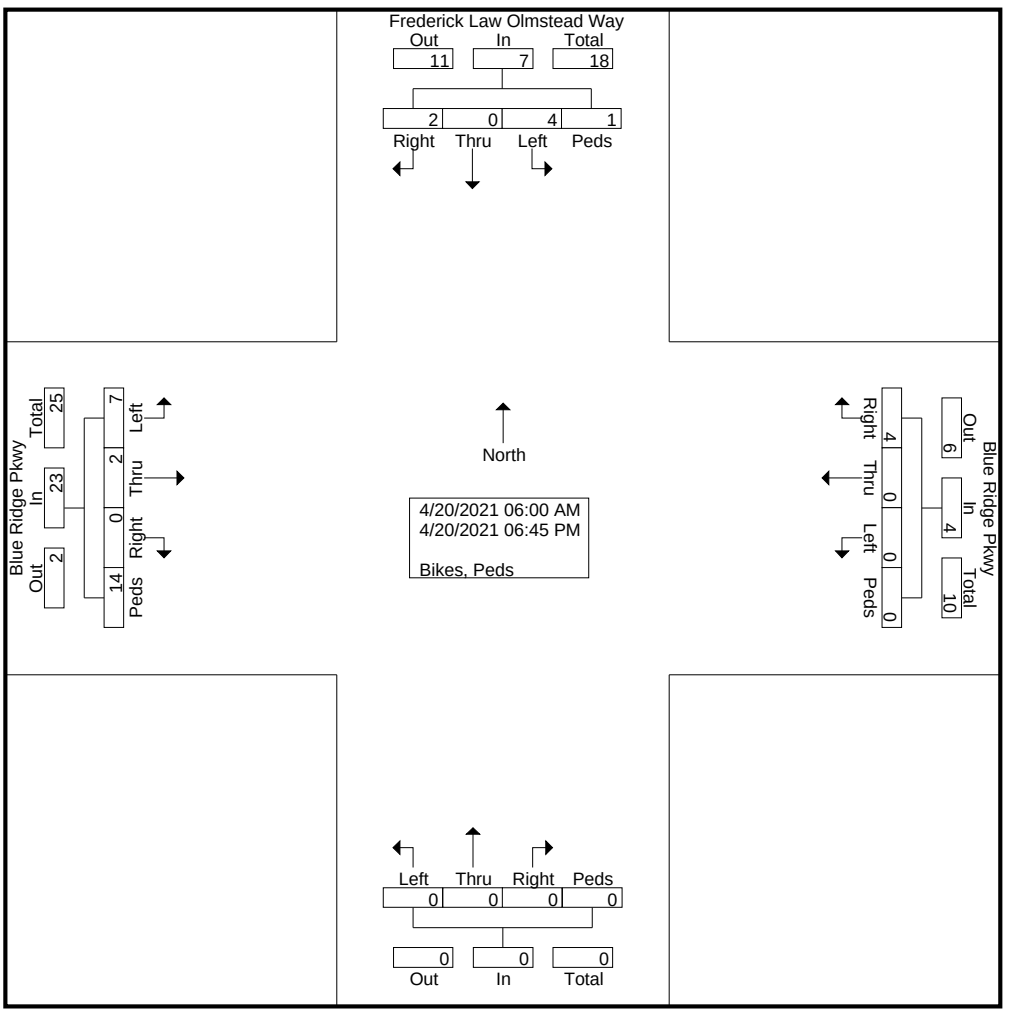

DocuSign Envelope ID: 5C03745C-4B01-4834-A65D-B77F558A4F46

Quality Counts

920 Blairhill Rd, Ste B-106
Charlotte, NC 28217

File Name : 15411710 - Frederick Law Olmstead Way -- Blue Ridge Pkwy
Site Code : 15411710
Start Date : 4/20/2021

	Frederick Law Olmstead Way Southbound					Blue Ridge Pkwy Westbound					Northbound					Blue Ridge Pkwy Eastbound					
Start Time	Left	Thru	Right	Peds	App. Total	Left	Thru	Right	Peds	App. Total	Left	Thru	Right	Peds	App. Total	Left	Thru	Right	Peds	App. Total	Int. Total
Peak Hour Analysis From 06:00 AM to 11:45 AM - Peak 1 of 1																					
Peak Hour for Entire Intersection Begins at 07:45 AM																					
07:45 AM	0	0	0	0	0	0	0	0	0	0	0	0	0	0	0	0	0	0	**2**	**2**	**2**
08:00 AM	0	0	0	0	0	0	0	0	0	0	0	0	0	0	0	0	0	0	0	0	0
08:15 AM	0	0	0	0	0	0	0	0	0	0	0	0	0	0	0	0	0	0	0	0	0
08:30 AM	0	0	0	0	0	0	0	0	0	0	0	0	0	0	0	0	0	0	2	2	2
Total Volume	0	0	0	0	0	0	0	0	0	0	0	0	0	0	0	0	0	0	4	4	4
% App. Total	0	0	0	0		0	0	0	0		0	0	0	0		0	0	0	100		
PHF	.000	.000	.000	.000	.000	.000	.000	.000	.000	.000	.000	.000	.000	.000	.000	.000	.000	.000	.500	.500	.500

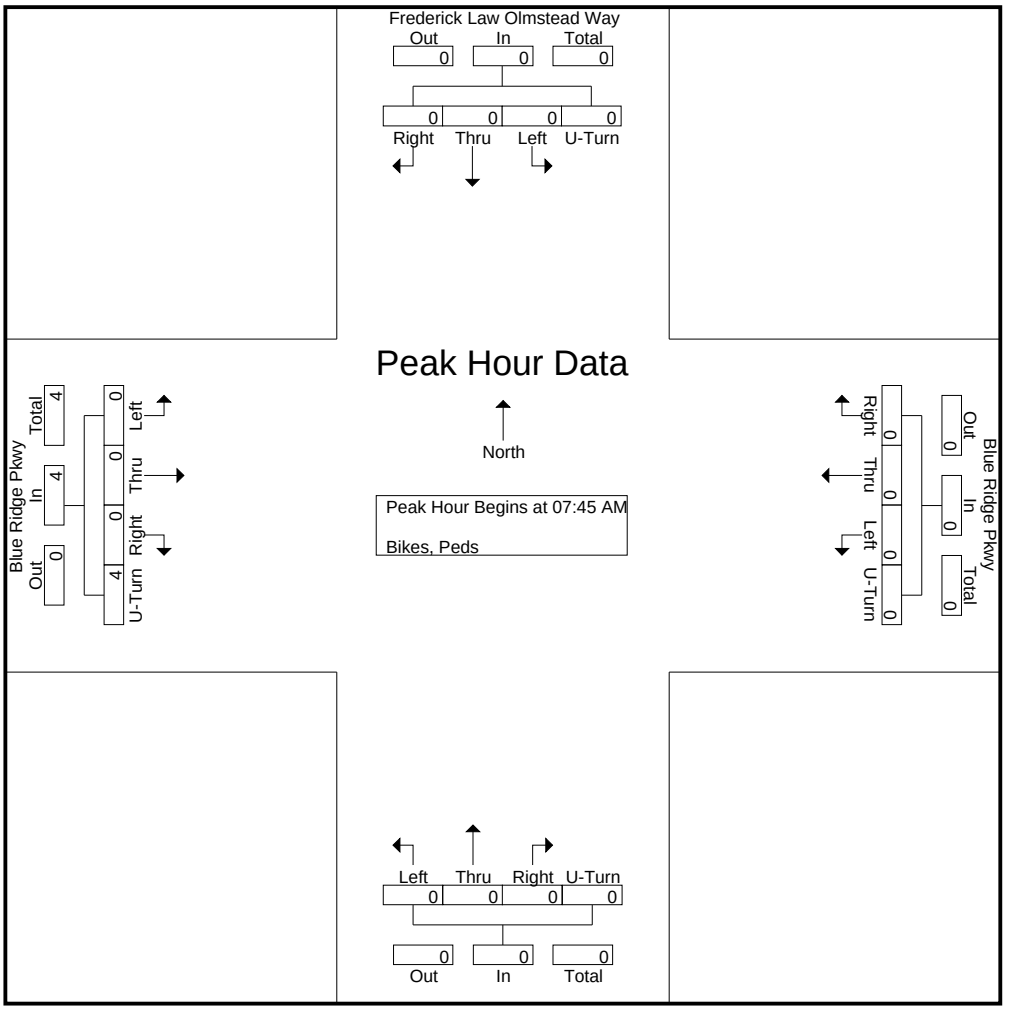

DocuSign Envelope ID: 5C03745C-4B01-4834-A65D-B77F558A4F46

Quality Counts

920 Blairhill Rd, Ste B-106
Charlotte, NC 28217

File Name : 15411710 - Frederick Law Olmstead Way -- Blue Ridge Pkwy
Site Code : 15411710
Start Date : 4/20/2021
Page No : 4

	Frederick Law Olmstead Way Southbound					Blue Ridge Pkwy Westbound					Northbound					Blue Ridge Pkwy Eastbound					
Start Time	Left	Thru	Right	Peds	App. Total	Left	Thru	Right	Peds	App. Total	Left	Thru	Right	Peds	App. Total	Left	Thru	Right	Peds	App. Total	Int. Total
Peak Hour Analysis From 12:00 PM to 06:45 PM - Peak 1 of 1																					
Peak Hour for Entire Intersection Begins at 03:45 PM																					
03:45 PM	0	0	**1**	0	**1**	0	0	0	0	0	0	0	0	0	0	0	0	0	0	0	1
04:00 PM	0	0	0	0	0	0	0	0	0	0	0	0	0	0	0	**1**	0	0	**1**	**2**	**2**
04:15 PM	**1**	0	0	0	1	0	0	0	0	0	0	0	0	0	0	0	0	0	1	1	2
04:30 PM	0	0	0	**1**	1	0	0	0	0	0	0	0	0	0	0	0	0	0	0	0	1
Total Volume	1	0	1	1	3	0	0	0	0	0	0	0	0	0	0	1	0	0	2	3	6
% App. Total	33.3	0	33.3	33.3		0	0	0	0		0	0	0	0		33.3	0	0	66.7		
PHF	.250	.000	.250	.250	.750	.000	.000	.000	.000	.000	.000	.000	.000	.000	.000	.250	.000	.000	.500	.375	.750

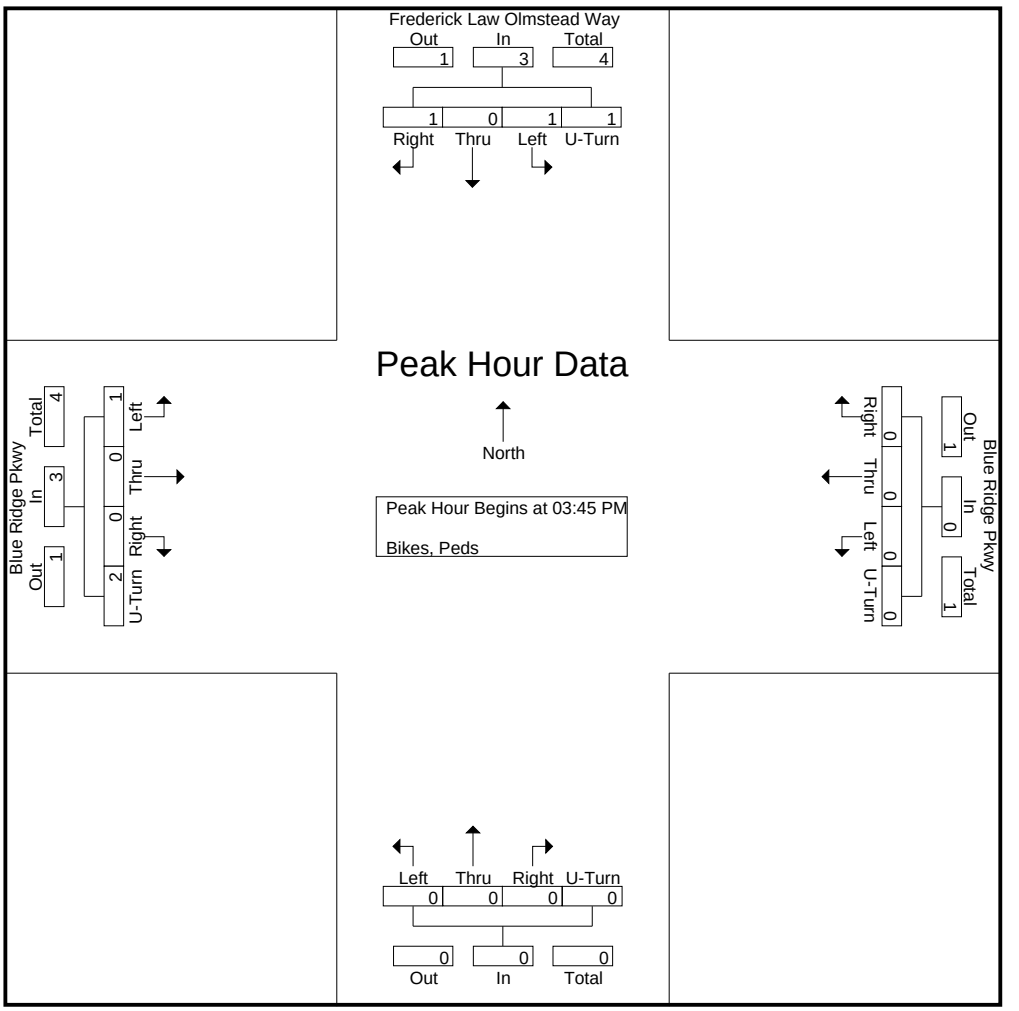

DocuSign Envelope ID: 5C03745C-4B01-4834-A65D-B77F558A4F46

QUALITY COUNTS LLC
920 Blairhill Rd, Suite 106, Charlotte, NC 28217
704.215.4616

Count Number: 15411711
County: Buncombe
City: Arden
Division: 13

Location: Brevard Rd & Clayton Rd
General Location Type: Intersection
Count Type: Turning Movement (Classification)
Count Start Date: 4/20/2021
Time: 6:00 AM – 7:00 PM
Volume: 15,896

Maximum Temperature: 69° F
Minimum Temperature: 40° F
Precipitation: 0.00 in
Snowfall: 0.0 in
Average Sky Cover: 0.2
Weather Conditions: Clear

1. **School in Session:** Yes
2. **Pedestrians Counted**: Yes
3. **Disabled Pedestrians Present**: No
   Description and Approaches Used: N/A
4. **Counted By**: Lucas Stephens
5. **Data Processor**: Jon B
6. **Signal Inventory**: N/A
7. **Data Collection Method**: Video/Count Board
8. **Equipment Operating Properly**: Yes
9. **Area Lighting Present**: No
10. **Nearest Roadway Stop Sign < 300 ft:** No
    If yes, list approaches: N/A
11. **Nearest Traffic Signal < 300 ft:** No
    If yes, list approaches: N/A
12. **At-Grade Railroad Crossing Present (<200 ft):** No
    If yes, list approaches & distance: N/A
13. **Other:**

↑ North

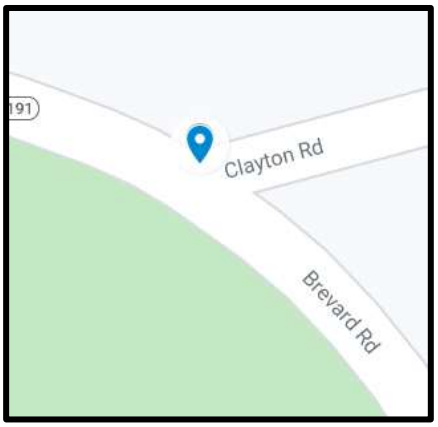

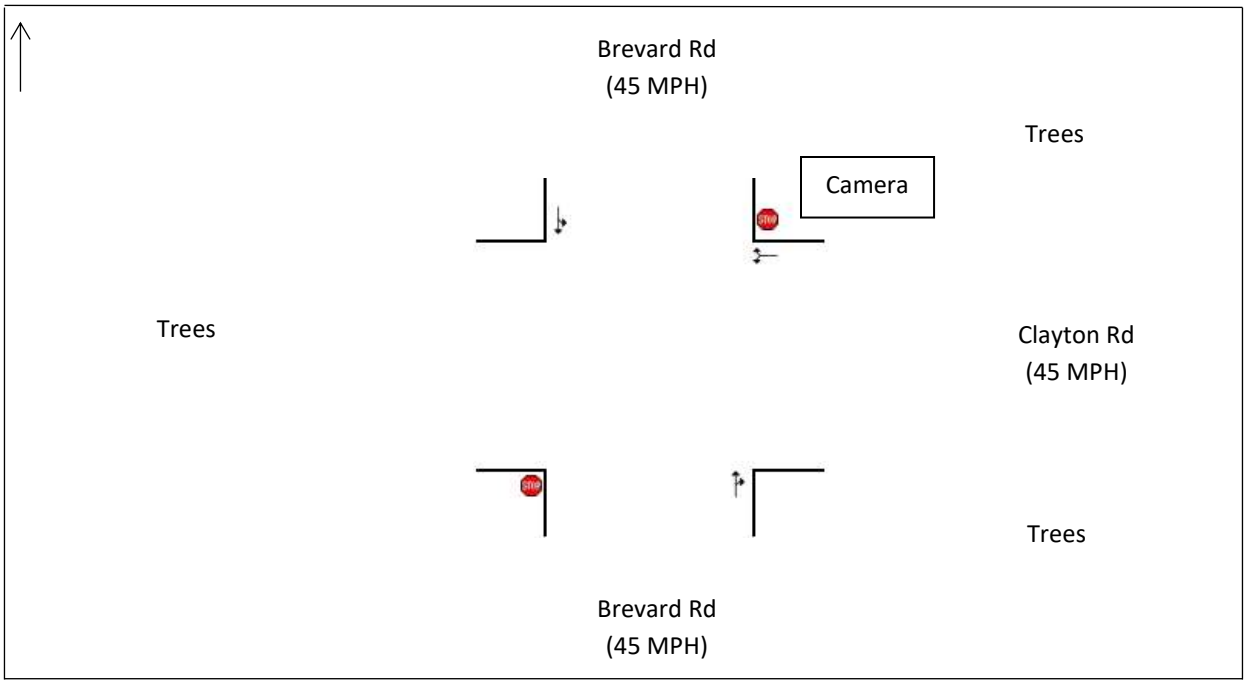

DocuSign Envelope ID: 5C03745C-4B01-4834-A65D-B77F558A4F46

Quality Counts

920 Blairhill Rd, Ste B-106
Charlotte, NC 28217

File Name : 15411711 - Brevard Rd -- Clayton Rd
Site Code : 15411711
Start Date : 4/20/2021
Page No : 1

Groups Printed- Classes 1, 2, 3 - Classes 4, 5, 6, 7 - Classes 8, 9, 10 - Classes 11, 12, 13

	Brevard Rd Southbound					Clayton Rd Westbound					Brevard Rd Northbound					Eastbound					
Start Time	Left	Thru	Right	U-Turn	App. Total	Left	Thru	Right	U-Turn	App. Total	Left	Thru	Right	U-Turn	App. Total	Left	Thru	Right	U-Turn	App. Total	Int. Total
06:00 AM	25	38	0	0	63	2	0	10	0	12	0	24	1	0	25	0	0	0	0	0	100
06:15 AM	15	59	0	0	74	1	0	14	0	15	0	43	1	0	44	0	0	0	0	0	133
06:30 AM	34	96	0	0	130	1	0	22	0	23	0	66	5	0	71	0	0	0	0	0	224
06:45 AM	38	110	0	0	148	0	0	18	0	18	0	62	4	0	66	0	0	0	0	0	232
Total	112	303	0	0	415	4	0	64	0	68	0	195	11	0	206	0	0	0	0	0	689
07:00 AM	45	88	0	0	133	3	0	18	0	21	0	115	6	0	121	0	0	0	0	0	275
07:15 AM	48	96	0	0	144	6	0	33	0	39	0	105	15	0	120	0	0	0	0	0	303
07:30 AM	62	117	0	0	179	7	0	56	0	63	0	103	11	0	114	0	0	0	0	0	356
07:45 AM	58	107	0	0	165	8	0	74	0	82	0	118	20	0	138	0	0	0	0	0	385
Total	213	408	0	0	621	24	0	181	0	205	0	441	52	0	493	0	0	0	0	0	1319
08:00 AM	50	91	0	0	141	4	0	71	0	75	0	120	5	0	125	0	0	0	0	0	341
08:15 AM	44	99	0	0	143	6	0	48	0	54	0	101	7	0	108	0	0	0	0	0	305
08:30 AM	57	83	0	0	140	1	0	46	0	47	0	102	8	0	110	0	0	0	0	0	297
08:45 AM	51	88	0	0	139	4	0	48	0	52	0	87	9	0	96	0	0	0	0	0	287
Total	202	361	0	0	563	15	0	213	0	228	0	410	29	0	439	0	0	0	0	0	1230
09:00 AM	41	77	0	0	118	5	0	30	0	35	0	71	8	0	79	0	0	0	0	0	232
09:15 AM	35	67	0	0	102	2	0	29	0	31	0	75	9	0	84	0	0	0	0	0	217
09:30 AM	35	74	0	0	109	3	0	42	0	45	0	87	5	0	92	0	0	0	0	0	246
09:45 AM	35	63	0	0	98	3	0	29	0	32	0	83	4	0	87	0	0	0	0	0	217
Total	146	281	0	0	427	13	0	130	0	143	0	316	26	0	342	0	0	0	0	0	912
10:00 AM	26	62	0	0	88	2	0	33	0	35	0	97	2	0	99	0	0	0	0	0	222
10:15 AM	24	74	0	0	98	0	0	33	0	33	0	67	5	0	72	0	0	0	0	0	203
10:30 AM	42	74	0	0	116	5	0	35	0	40	0	91	5	0	96	0	0	0	0	0	252
10:45 AM	41	81	0	0	122	4	0	34	0	38	0	83	6	0	89	0	0	0	0	0	249
Total	133	291	0	0	424	11	0	135	0	146	0	338	18	0	356	0	0	0	0	0	926
11:00 AM	29	70	0	0	99	6	0	50	0	56	0	93	7	0	100	0	0	0	0	0	255
11:15 AM	40	76	0	0	116	7	0	49	0	56	0	79	6	0	85	0	0	0	0	0	257
11:30 AM	34	61	0	0	95	5	0	46	0	51	0	78	13	0	91	0	0	0	0	0	237
11:45 AM	39	82	0	0	121	2	0	43	0	45	0	87	6	0	93	0	0	0	0	0	259
Total	142	289	0	0	431	20	0	188	0	208	0	337	32	0	369	0	0	0	0	0	1008
12:00 PM	48	79	0	0	127	0	0	46	0	46	0	88	8	0	96	0	0	0	0	0	269
12:15 PM	49	78	0	0	127	5	0	44	0	49	0	95	6	0	101	0	0	0	0	0	277
12:30 PM	55	109	0	0	164	2	0	51	0	53	0	114	6	0	120	0	0	0	0	0	337
12:45 PM	46	86	0	0	132	3	0	51	0	54	0	92	3	0	95	0	0	0	0	0	281
Total	198	352	0	0	550	10	0	192	0	202	0	389	23	0	412	0	0	0	0	0	1164
01:00 PM	43	87	0	0	130	2	0	40	0	42	0	95	8	0	103	0	0	0	0	0	275
01:15 PM	48	84	0	0	132	1	0	54	0	55	0	103	6	0	109	0	0	0	0	0	296
01:30 PM	47	89	0	0	136	2	0	53	0	55	0	98	5	0	103	0	0	0	0	0	294
01:45 PM	59	97	0	0	156	6	0	51	0	57	0	83	9	0	92	0	0	0	0	0	305
Total	197	357	0	0	554	11	0	198	0	209	0	379	28	0	407	0	0	0	0	0	1170
02:00 PM	72	101	0	0	173	6	0	60	0	66	0	106	5	0	111	0	0	0	0	0	350
02:15 PM	71	94	0	0	165	2	0	60	0	62	0	77	3	0	80	0	0	0	0	0	307
02:30 PM	56	121	0	0	177	8	0	61	0	69	0	151	11	0	162	0	0	0	0	0	408
02:45 PM	57	118	0	0	175	5	0	51	0	56	0	142	12	0	154	0	0	0	0	0	385
Total	256	434	0	0	690	21	0	232	0	253	0	476	31	0	507	0	0	0	0	0	1450
03:00 PM	45	82	0	0	127	4	0	64	0	68	0	206	15	0	221	0	0	0	0	0	416
03:15 PM	62	114	0	0	176	5	0	64	0	69	0	140	12	0	152	0	0	0	0	0	397
03:30 PM	60	108	0	0	168	1	0	75	0	76	0	126	9	0	135	0	0	0	0	0	379

DocuSign Envelope ID: 5C03745C-4B01-4834-A65D-B77F558A4F46

Quality Counts

920 Blairhill Rd, Ste B-106
Charlotte, NC 28217

File Name : 15411711 - Brevard Rd -- Clayton Rd
Site Code : 15411711
Start Date : 4/20/2021
Page No : 2

Groups Printed- Classes 1, 2, 3 - Classes 4, 5, 6, 7 - Classes 8, 9, 10 - Classes 11, 12, 13

	Brevard Rd Southbound					Clayton Rd Westbound					Brevard Rd Northbound					Eastbound					
Start Time	Left	Thru	Right	U-Turn	App. Total	Left	Thru	Right	U-Turn	App. Total	Left	Thru	Right	U-Turn	App. Total	Left	Thru	Right	U-Turn	App. Total	Int. Total
03:45 PM	70	88	0	0	158	1	0	58	0	59	0	146	14	0	160	0	0	0	0	0	377
Total	237	392	0	0	629	11	0	261	0	272	0	618	50	0	668	0	0	0	0	0	1569
04:00 PM	71	111	0	0	182	2	0	65	0	67	0	156	14	0	170	0	0	0	0	0	419
04:15 PM	57	130	0	0	187	2	0	80	0	82	0	150	13	0	163	0	0	0	0	0	432
04:30 PM	63	131	0	0	194	2	0	78	0	80	0	146	10	0	156	0	0	0	0	0	430
04:45 PM	50	106	0	0	156	2	0	72	0	74	0	160	13	0	173	0	0	0	0	0	403
Total	241	478	0	0	719	8	0	295	0	303	0	612	50	0	662	0	0	0	0	0	1684
05:00 PM	66	89	0	0	155	0	0	73	0	73	0	165	4	0	169	0	0	0	0	0	397
05:15 PM	76	117	0	0	193	4	0	77	0	81	0	173	6	0	179	0	0	0	0	0	453
05:30 PM	74	110	0	0	184	3	0	63	0	66	0	183	11	0	194	0	0	0	0	0	444
05:45 PM	72	117	0	0	189	2	0	63	0	65	0	105	11	0	116	0	0	0	0	0	370
Total	288	433	0	0	721	9	0	276	0	285	0	626	32	0	658	0	0	0	0	0	1664
06:00 PM	53	104	0	0	157	4	0	61	0	65	0	97	6	0	103	0	0	0	0	0	325
06:15 PM	58	86	0	0	144	3	0	51	0	54	0	108	6	0	114	0	0	0	0	0	312
06:30 PM	39	80	0	0	119	3	0	43	0	46	0	69	3	0	72	0	0	0	0	0	237
06:45 PM	41	59	0	0	100	0	0	46	0	46	0	86	5	0	91	0	0	0	0	0	237
Total	191	329	0	0	520	10	0	201	0	211	0	360	20	0	380	0	0	0	0	0	1111
Grand Total	2556	4708	0	0	7264	167	0	2566	0	2733	0	5497	402	0	5899	0	0	0	0	0	15896
Apprch %	35.2	64.8	0	0		6.1	0	93.9	0		0	93.2	6.8	0		0	0	0	0		
Total %	16.1	29.6	0	0	45.7	1.1	0	16.1	0	17.2	0	34.6	2.5	0	37.1	0	0	0	0	0	
Classes 1, 2, 3	2466	4359	0	0	6825	156	0	2454	0	2610	0	5055	376	0	5431	0	0	0	0	0	14866
% Classes 1, 2, 3	96.5	92.6	0	0	94	93.4	0	95.6	0	95.5	0	92	93.5	0	92.1	0	0	0	0	0	93.5
Classes 4, 5, 6, 7	78	295	0	0	373	10	0	101	0	111	0	369	25	0	394	0	0	0	0	0	878
% Classes 4, 5, 6, 7	3.1	6.3	0	0	5.1	6	0	3.9	0	4.1	0	6.7	6.2	0	6.7	0	0	0	0	0	5.5
Classes 8, 9, 10	12	54	0	0	66	1	0	11	0	12	0	73	1	0	74	0	0	0	0	0	152
% Classes 8, 9, 10	0.5	1.1	0	0	0.9	0.6	0	0.4	0	0.4	0	1.3	0.2	0	1.3	0	0	0	0	0	1
Classes 11, 12, 13	0	0	0	0	0	0	0	0	0	0	0	0	0	0	0	0	0	0	0	0	0
% Classes 11, 12, 13	0	0	0	0	0	0	0	0	0	0	0	0	0	0	0	0	0	0	0	0	0

DocuSign Envelope ID: 5C03745C-4B01-4834-A65D-B77F558A4F46

Quality Counts

920 Blairhill Rd, Ste B-106
Charlotte, NC 28217

File Name : 15411711 - Brevard Rd -- Clayton Rd
Site Code : 15411711
Start Date : 4/20/2021
Page No : 3

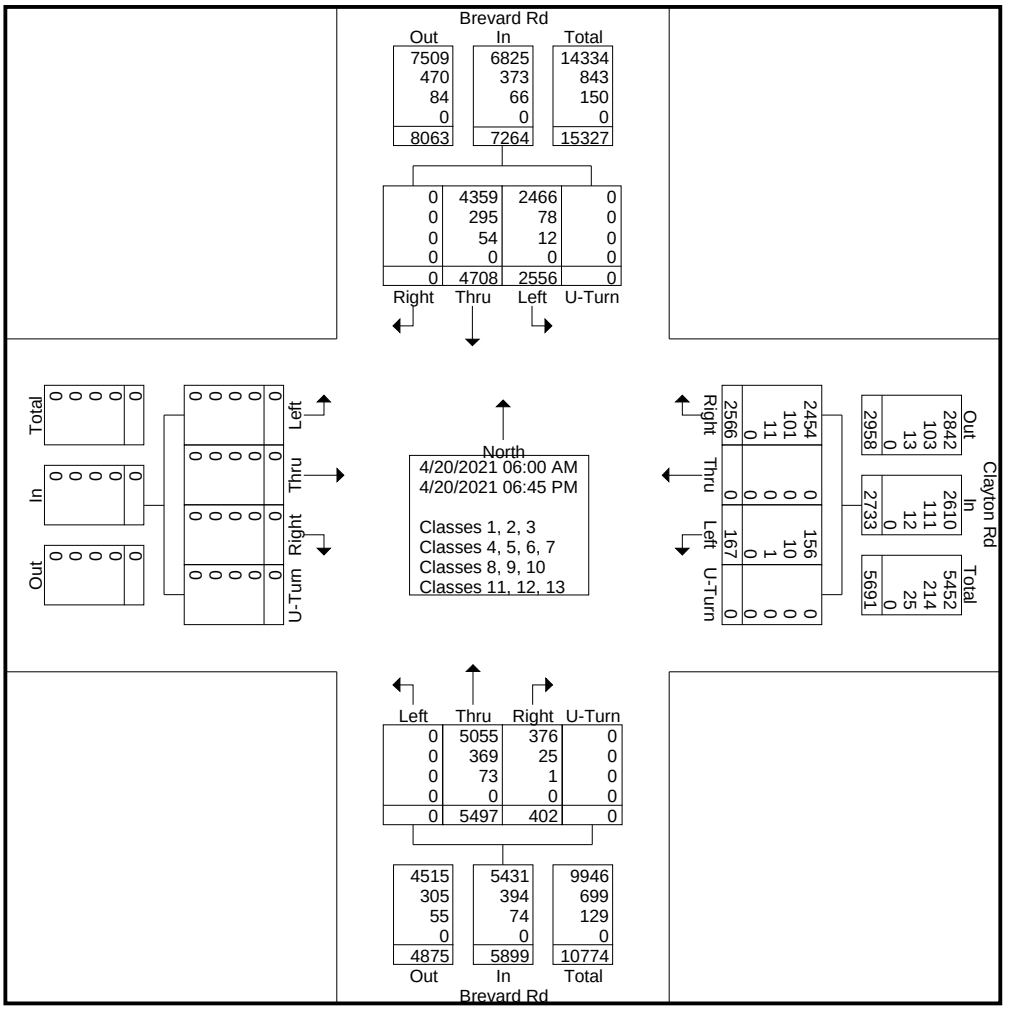

DocuSign Envelope ID: 5C03745C-4B01-4834-A65D-B77F558A4F46

Quality Counts

920 Blairhill Rd, Ste B-106
Charlotte, NC 28217

File Name : 15411711 - Brevard Rd -- Clayton Rd
Site Code : 15411711
Start Date : 4/20/2021
Page No : 4

	Brevard Rd Southbound					Clayton Rd Westbound					Brevard Rd Northbound					Eastbound					
Start Time	Left	Thru	Right	U-Turn	App. Total	Left	Thru	Right	U-Turn	App. Total	Left	Thru	Right	U-Turn	App. Total	Left	Thru	Right	U-Turn	App. Total	Int. Total
Peak Hour Analysis From 06:00 AM to 11:45 AM - Peak 1 of 1																					
Peak Hour for Entire Intersection Begins at 07:30 AM																					
07:30 AM	**62**	**117**	0	0	**179**	7	0	56	0	63	0	103	11	0	114	0	0	0	0	0	356
07:45 AM	58	107	0	0	165	**8**	0	**74**	0	**82**	0	118	**20**	0	**138**	0	0	0	0	0	**385**
08:00 AM	50	91	0	0	141	4	0	71	0	75	0	**120**	5	0	125	0	0	0	0	0	341
08:15 AM	44	99	0	0	143	6	0	48	0	54	0	101	7	0	108	0	0	0	0	0	305
Total Volume	214	414	0	0	628	25	0	249	0	274	0	442	43	0	485	0	0	0	0	0	1387
% App. Total	34.1	65.9	0	0		9.1	0	90.9	0		0	91.1	8.9	0		0	0	0	0		
PHF	.863	.885	.000	.000	.877	.781	.000	.841	.000	.835	.000	.921	.538	.000	.879	.000	.000	.000	.000	.000	.901

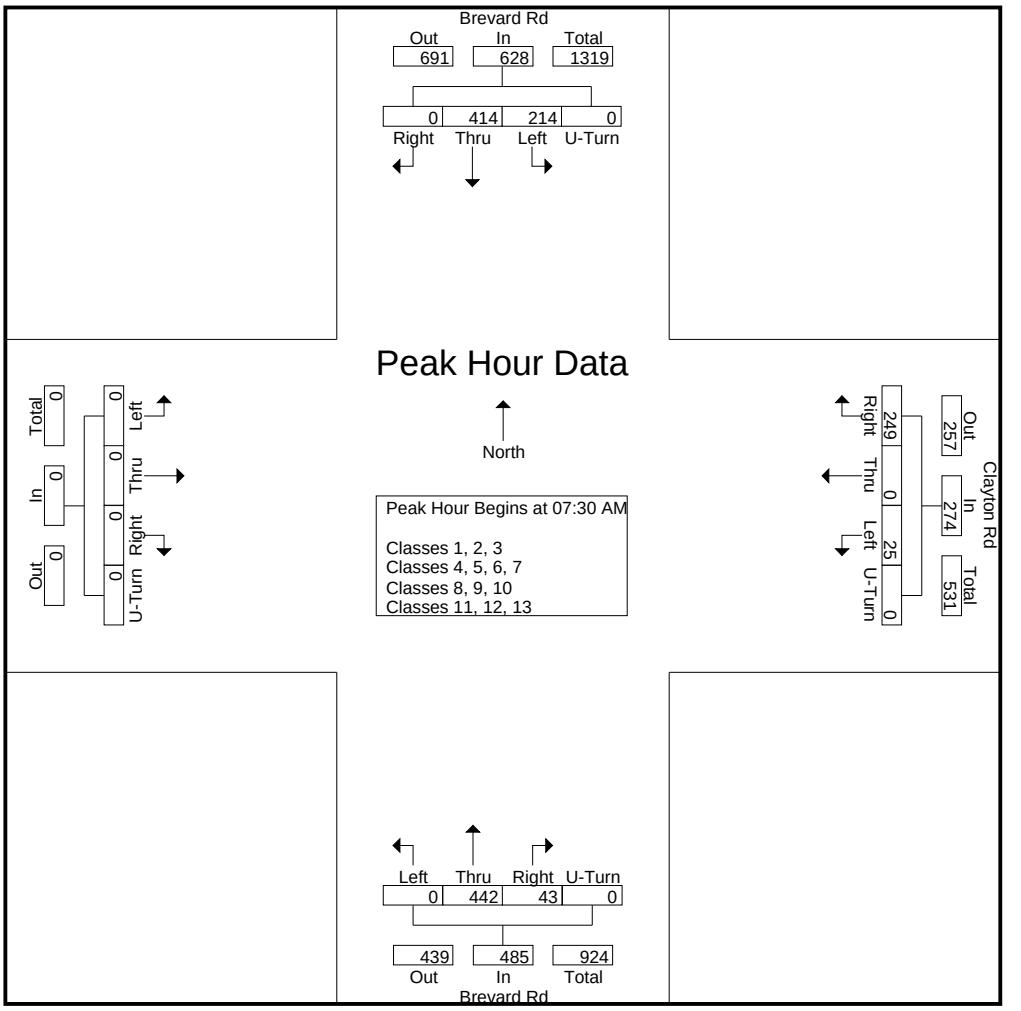

DocuSign Envelope ID: 5C03745C-4B01-4834-A65D-B77F558A4F46

Quality Counts

920 Blairhill Rd, Ste B-106
Charlotte, NC 28217

File Name : 15411711 - Brevard Rd -- Clayton Rd
Site Code : 15411711
Start Date : 4/20/2021
Page No : 5

	Brevard Rd Southbound					Clayton Rd Westbound					Brevard Rd Northbound					Eastbound					
Start Time	Left	Thru	Right	U-Turn	App. Total	Left	Thru	Right	U-Turn	App. Total	Left	Thru	Right	U-Turn	App. Total	Left	Thru	Right	U-Turn	App. Total	Int. Total
Peak Hour Analysis From 12:00 PM to 06:45 PM - Peak 1 of 1																					
Peak Hour for Entire Intersection Begins at 04:45 PM																					
04:45 PM	50	106	0	0	156	2	0	72	0	74	0	160	**13**	0	173	0	0	0	0	0	403
05:00 PM	66	89	0	0	155	0	0	73	0	73	0	165	4	0	169	0	0	0	0	0	397
05:15 PM	**76**	**117**	0	0	**193**	**4**	0	**77**	0	**81**	0	173	6	0	179	0	0	0	0	0	**453**
05:30 PM	74	110	0	0	184	3	0	63	0	66	0	**183**	11	0	**194**	0	0	0	0	0	444
Total Volume	266	422	0	0	688	9	0	285	0	294	0	681	34	0	715	0	0	0	0	0	1697
% App. Total	38.7	61.3	0	0		3.1	0	96.9	0		0	95.2	4.8	0		0	0	0	0		
PHF	.875	.902	.000	.000	.891	.563	.000	.925	.000	.907	.000	.930	.654	.000	.921	.000	.000	.000	.000	.000	.937

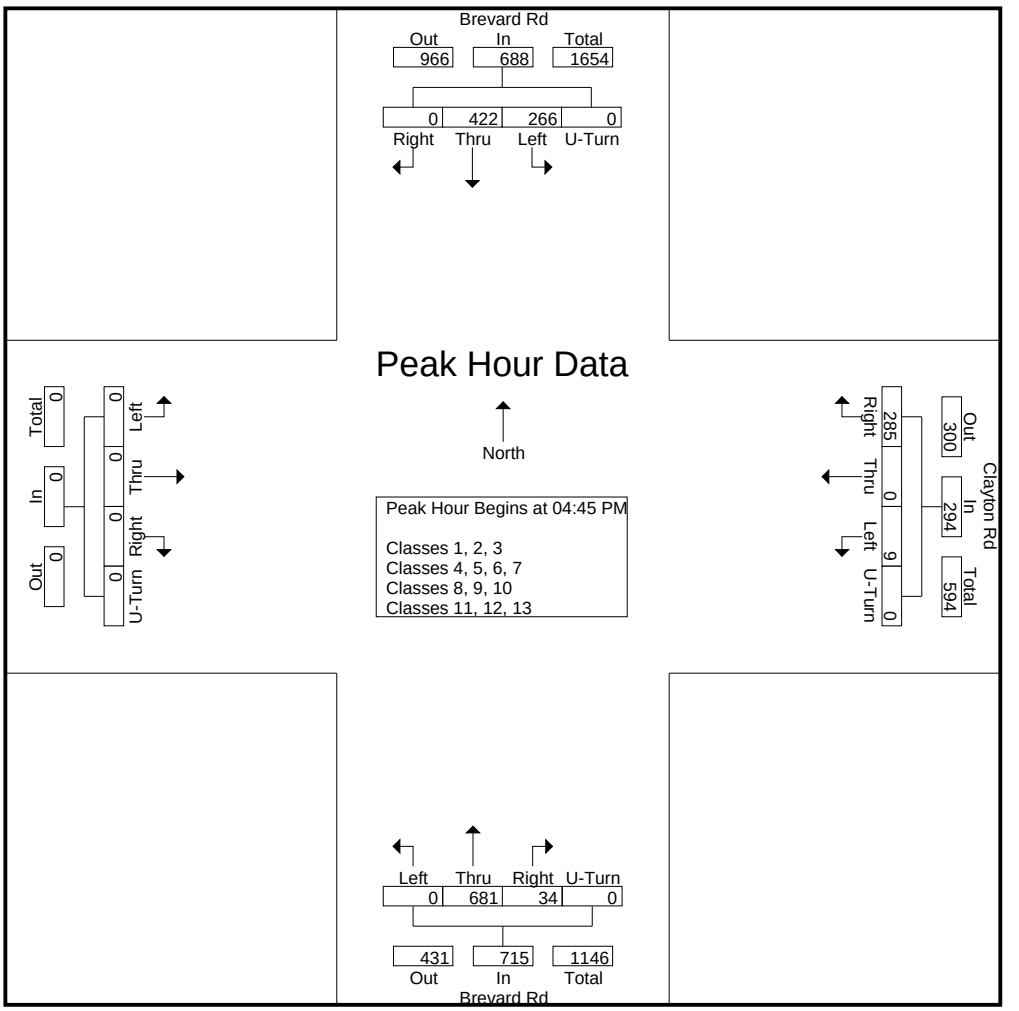

DocuSign Envelope ID: 5C03745C-4B01-4834-A65D-B77F558A4F46

Quality Counts

920 Blairhill Rd, Ste B-106
Charlotte, NC 28217

File Name : 15411711 - Brevard Rd -- Clayton Rd
Site Code : 15411711
Start Date : 4/20/2021
Page No : 1

Groups Printed- Classes 1, 2, 3

	Brevard Rd Southbound					Clayton Rd Westbound					Brevard Rd Northbound					Eastbound					
Start Time	Left	Thru	Right	U-Turn	App. Total	Left	Thru	Right	U-Turn	App. Total	Left	Thru	Right	U-Turn	App. Total	Left	Thru	Right	U-Turn	App. Total	Int. Total
06:00 AM	25	36	0	0	61	2	0	9	0	11	0	17	1	0	18	0	0	0	0	0	90
06:15 AM	14	59	0	0	73	1	0	13	0	14	0	32	1	0	33	0	0	0	0	0	120
06:30 AM	33	94	0	0	127	1	0	22	0	23	0	59	5	0	64	0	0	0	0	0	214
06:45 AM	37	107	0	0	144	0	0	18	0	18	0	57	4	0	61	0	0	0	0	0	223
Total	109	296	0	0	405	4	0	62	0	66	0	165	11	0	176	0	0	0	0	0	647
07:00 AM	43	85	0	0	128	3	0	18	0	21	0	112	6	0	118	0	0	0	0	0	267
07:15 AM	47	92	0	0	139	5	0	31	0	36	0	99	11	0	110	0	0	0	0	0	285
07:30 AM	60	109	0	0	169	6	0	52	0	58	0	99	10	0	109	0	0	0	0	0	336
07:45 AM	55	97	0	0	152	8	0	73	0	81	0	108	20	0	128	0	0	0	0	0	361
Total	205	383	0	0	588	22	0	174	0	196	0	418	47	0	465	0	0	0	0	0	1249
08:00 AM	46	85	0	0	131	4	0	70	0	74	0	110	3	0	113	0	0	0	0	0	318
08:15 AM	44	89	0	0	133	5	0	48	0	53	0	91	5	0	96	0	0	0	0	0	282
08:30 AM	55	77	0	0	132	1	0	44	0	45	0	94	8	0	102	0	0	0	0	0	279
08:45 AM	47	79	0	0	126	4	0	43	0	47	0	80	8	0	88	0	0	0	0	0	261
Total	192	330	0	0	522	14	0	205	0	219	0	375	24	0	399	0	0	0	0	0	1140
09:00 AM	40	71	0	0	111	4	0	27	0	31	0	62	7	0	69	0	0	0	0	0	211
09:15 AM	33	52	0	0	85	1	0	28	0	29	0	68	7	0	75	0	0	0	0	0	189
09:30 AM	33	69	0	0	102	3	0	38	0	41	0	79	5	0	84	0	0	0	0	0	227
09:45 AM	34	55	0	0	89	3	0	29	0	32	0	72	4	0	76	0	0	0	0	0	197
Total	140	247	0	0	387	11	0	122	0	133	0	281	23	0	304	0	0	0	0	0	824
10:00 AM	24	56	0	0	80	2	0	31	0	33	0	84	2	0	86	0	0	0	0	0	199
10:15 AM	23	64	0	0	87	0	0	31	0	31	0	59	5	0	64	0	0	0	0	0	182
10:30 AM	41	62	0	0	103	4	0	33	0	37	0	81	4	0	85	0	0	0	0	0	225
10:45 AM	38	73	0	0	111	4	0	30	0	34	0	71	5	0	76	0	0	0	0	0	221
Total	126	255	0	0	381	10	0	125	0	135	0	295	16	0	311	0	0	0	0	0	827
11:00 AM	27	59	0	0	86	5	0	47	0	52	0	85	7	0	92	0	0	0	0	0	230
11:15 AM	37	68	0	0	105	5	0	45	0	50	0	70	5	0	75	0	0	0	0	0	230
11:30 AM	33	53	0	0	86	5	0	43	0	48	0	67	12	0	79	0	0	0	0	0	213
11:45 AM	38	77	0	0	115	2	0	42	0	44	0	79	6	0	85	0	0	0	0	0	244
Total	135	257	0	0	392	17	0	177	0	194	0	301	30	0	331	0	0	0	0	0	917
12:00 PM	47	71	0	0	118	0	0	44	0	44	0	77	8	0	85	0	0	0	0	0	247
12:15 PM	48	72	0	0	120	5	0	43	0	48	0	88	6	0	94	0	0	0	0	0	262
12:30 PM	54	105	0	0	159	2	0	50	0	52	0	101	6	0	107	0	0	0	0	0	318
12:45 PM	44	80	0	0	124	3	0	49	0	52	0	82	3	0	85	0	0	0	0	0	261
Total	193	328	0	0	521	10	0	186	0	196	0	348	23	0	371	0	0	0	0	0	1088
01:00 PM	43	77	0	0	120	2	0	36	0	38	0	90	8	0	98	0	0	0	0	0	256
01:15 PM	46	80	0	0	126	1	0	50	0	51	0	95	6	0	101	0	0	0	0	0	278
01:30 PM	44	79	0	0	123	2	0	52	0	54	0	89	5	0	94	0	0	0	0	0	271
01:45 PM	59	91	0	0	150	6	0	49	0	55	0	77	8	0	85	0	0	0	0	0	290
Total	192	327	0	0	519	11	0	187	0	198	0	351	27	0	378	0	0	0	0	0	1095
02:00 PM	68	92	0	0	160	5	0	60	0	65	0	98	5	0	103	0	0	0	0	0	328
02:15 PM	69	87	0	0	156	2	0	59	0	61	0	71	3	0	74	0	0	0	0	0	291
02:30 PM	55	112	0	0	167	8	0	58	0	66	0	138	10	0	148	0	0	0	0	0	381
02:45 PM	57	112	0	0	169	5	0	48	0	53	0	136	11	0	147	0	0	0	0	0	369
Total	249	403	0	0	652	20	0	225	0	245	0	443	29	0	472	0	0	0	0	0	1369
03:00 PM	43	75	0	0	118	4	0	61	0	65	0	194	15	0	209	0	0	0	0	0	392
03:15 PM	61	101	0	0	162	5	0	62	0	67	0	126	11	0	137	0	0	0	0	0	366
03:30 PM	58	96	0	0	154	1	0	69	0	70	0	115	9	0	124	0	0	0	0	0	348

DocuSign Envelope ID: 5C03745C-4B01-4834-A65D-B77F558A4F46

Quality Counts

920 Blairhill Rd, Ste B-106
Charlotte, NC 28217

File Name : 15411711 - Brevard Rd -- Clayton Rd
Site Code : 15411711
Start Date : 4/20/2021
Page No : 2

Groups Printed- Classes 1, 2, 3

	Brevard Rd Southbound					Clayton Rd Westbound					Brevard Rd Northbound					Eastbound					
Start Time	Left	Thru	Right	U-Turn	App. Total	Left	Thru	Right	U-Turn	App. Total	Left	Thru	Right	U-Turn	App. Total	Left	Thru	Right	U-Turn	App. Total	Int. Total
03:45 PM	68	79	0	0	147	1	0	55	0	56	0	135	12	0	147	0	0	0	0	0	350
Total	230	351	0	0	581	11	0	247	0	258	0	570	47	0	617	0	0	0	0	0	1456
04:00 PM	64	102	0	0	166	2	0	60	0	62	0	147	14	0	161	0	0	0	0	0	389
04:15 PM	55	121	0	0	176	2	0	78	0	80	0	138	12	0	150	0	0	0	0	0	406
04:30 PM	63	124	0	0	187	2	0	74	0	76	0	137	10	0	147	0	0	0	0	0	410
04:45 PM	48	102	0	0	150	2	0	71	0	73	0	151	12	0	163	0	0	0	0	0	386
Total	230	449	0	0	679	8	0	283	0	291	0	573	48	0	621	0	0	0	0	0	1591
05:00 PM	65	83	0	0	148	0	0	70	0	70	0	151	4	0	155	0	0	0	0	0	373
05:15 PM	72	113	0	0	185	3	0	75	0	78	0	162	6	0	168	0	0	0	0	0	431
05:30 PM	73	107	0	0	180	3	0	60	0	63	0	177	11	0	188	0	0	0	0	0	431
05:45 PM	70	112	0	0	182	2	0	60	0	62	0	100	10	0	110	0	0	0	0	0	354
Total	280	415	0	0	695	8	0	265	0	273	0	590	31	0	621	0	0	0	0	0	1589
06:00 PM	51	100	0	0	151	4	0	58	0	62	0	91	6	0	97	0	0	0	0	0	310
06:15 PM	55	84	0	0	139	3	0	50	0	53	0	106	6	0	112	0	0	0	0	0	304
06:30 PM	38	76	0	0	114	3	0	43	0	46	0	66	3	0	69	0	0	0	0	0	229
06:45 PM	41	58	0	0	99	0	0	45	0	45	0	82	5	0	87	0	0	0	0	0	231
Total	185	318	0	0	503	10	0	196	0	206	0	345	20	0	365	0	0	0	0	0	1074
Grand Total	2466	4359	0	0	6825	156	0	2454	0	2610	0	5055	376	0	5431	0	0	0	0	0	14866
Apprch %	36.1	63.9	0	0		6	0	94	0		0	93.1	6.9	0		0	0	0	0		
Total %	16.6	29.3	0	0	45.9	1	0	16.5	0	17.6	0	34	2.5	0	36.5	0	0	0	0	0	

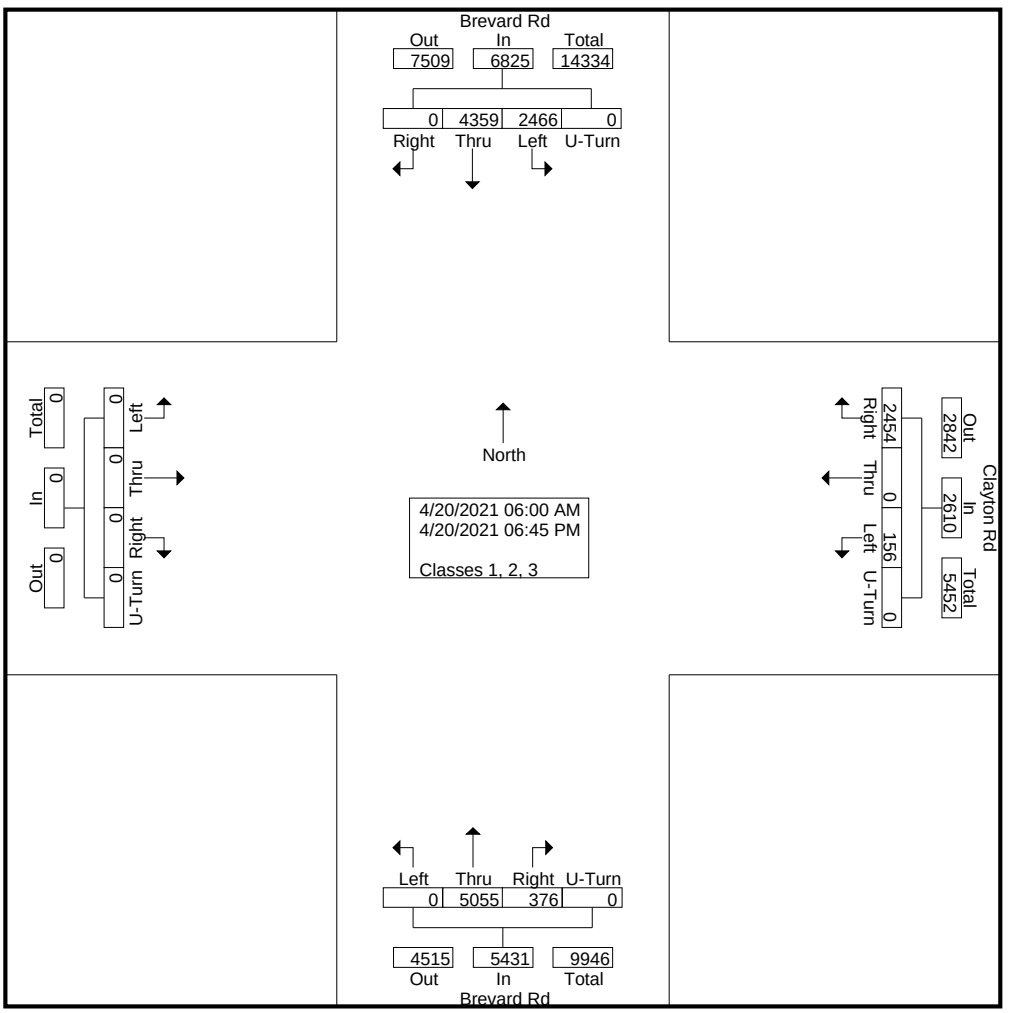

DocuSign Envelope ID: 5C03745C-4B01-4834-A65D-B77F558A4F46

Quality Counts

920 Blairhill Rd, Ste B-106
Charlotte, NC 28217

File Name : 15411711 - Brevard Rd -- Clayton Rd
Site Code : 15411711
Start Date : 4/20/2021
Page No : 3

	Brevard Rd Southbound					Clayton Rd Westbound					Brevard Rd Northbound					Eastbound					
Start Time	Left	Thru	Right	U-Turn	App. Total	Left	Thru	Right	U-Turn	App. Total	Left	Thru	Right	U-Turn	App. Total	Left	Thru	Right	U-Turn	App. Total	Int. Total
Peak Hour Analysis From 06:00 AM to 11:45 AM - Peak 1 of 1																					
Peak Hour for Entire Intersection Begins at 07:15 AM																					
07:15 AM	47	92	0	0	139	5	0	31	0	36	0	99	11	0	110	0	0	0	0	0	285
07:30 AM	**60**	**109**	0	0	**169**	6	0	52	0	58	0	99	10	0	109	0	0	0	0	0	336
07:45 AM	55	97	0	0	152	**8**	0	**73**	0	**81**	0	108	**20**	0	**128**	0	0	0	0	0	**361**
08:00 AM	46	85	0	0	131	4	0	70	0	74	0	**110**	3	0	113	0	0	0	0	0	318
Total Volume	208	383	0	0	591	23	0	226	0	249	0	416	44	0	460	0	0	0	0	0	1300
% App. Total	35.2	64.8	0	0		9.2	0	90.8	0		0	90.4	9.6	0		0	0	0	0		
PHF	.867	.878	.000	.000	.874	.719	.000	.774	.000	.769	.000	.945	.550	.000	.898	.000	.000	.000	.000	.000	.900

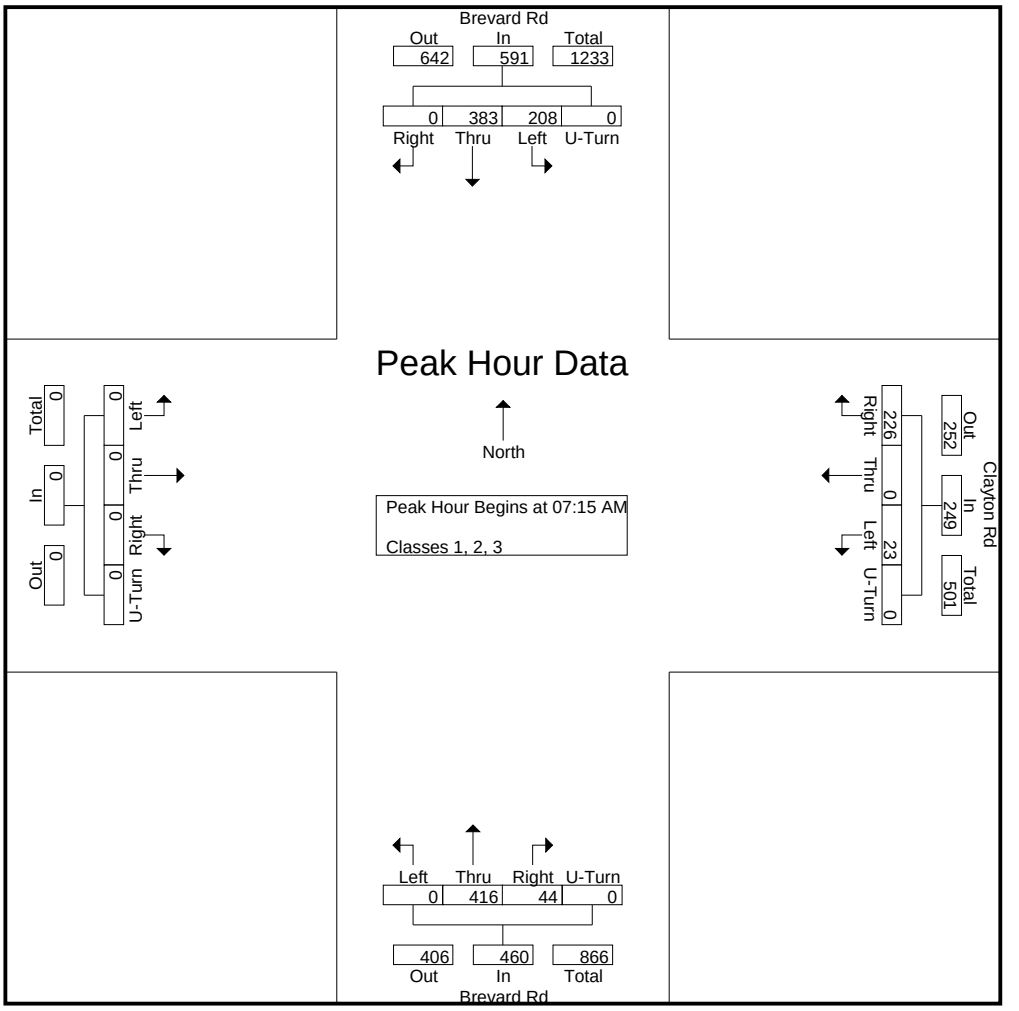

DocuSign Envelope ID: 5C03745C-4B01-4834-A65D-B77F558A4F46

Quality Counts

920 Blairhill Rd, Ste B-106
Charlotte, NC 28217

File Name : 15411711 - Brevard Rd -- Clayton Rd
Site Code : 15411711
Start Date : 4/20/2021
Page No : 4

	Brevard Rd Southbound					Clayton Rd Westbound					Brevard Rd Northbound					Eastbound					
Start Time	Left	Thru	Right	U-Turn	App. Total	Left	Thru	Right	U-Turn	App. Total	Left	Thru	Right	U-Turn	App. Total	Left	Thru	Right	U-Turn	App. Total	Int. Total
Peak Hour Analysis From 12:00 PM to 06:45 PM - Peak 1 of 1																					
Peak Hour for Entire Intersection Begins at 04:45 PM																					
04:45 PM	48	102	0	0	150	2	0	71	0	73	0	151	**12**	0	163	0	0	0	0	0	386
05:00 PM	65	83	0	0	148	0	0	70	0	70	0	151	4	0	155	0	0	0	0	0	373
05:15 PM	72	**113**	0	0	**185**	**3**	0	**75**	0	**78**	0	162	6	0	168	0	0	0	0	0	**431**
05:30 PM	**73**	107	0	0	180	3	0	60	0	63	0	**177**	11	0	**188**	0	0	0	0	0	431
Total Volume	258	405	0	0	663	8	0	276	0	284	0	641	33	0	674	0	0	0	0	0	1621
% App. Total	38.9	61.1	0	0		2.8	0	97.2	0		0	95.1	4.9	0		0	0	0	0		
PHF	.884	.896	.000	.000	.896	.667	.000	.920	.000	.910	.000	.905	.688	.000	.896	.000	.000	.000	.000	.000	.940

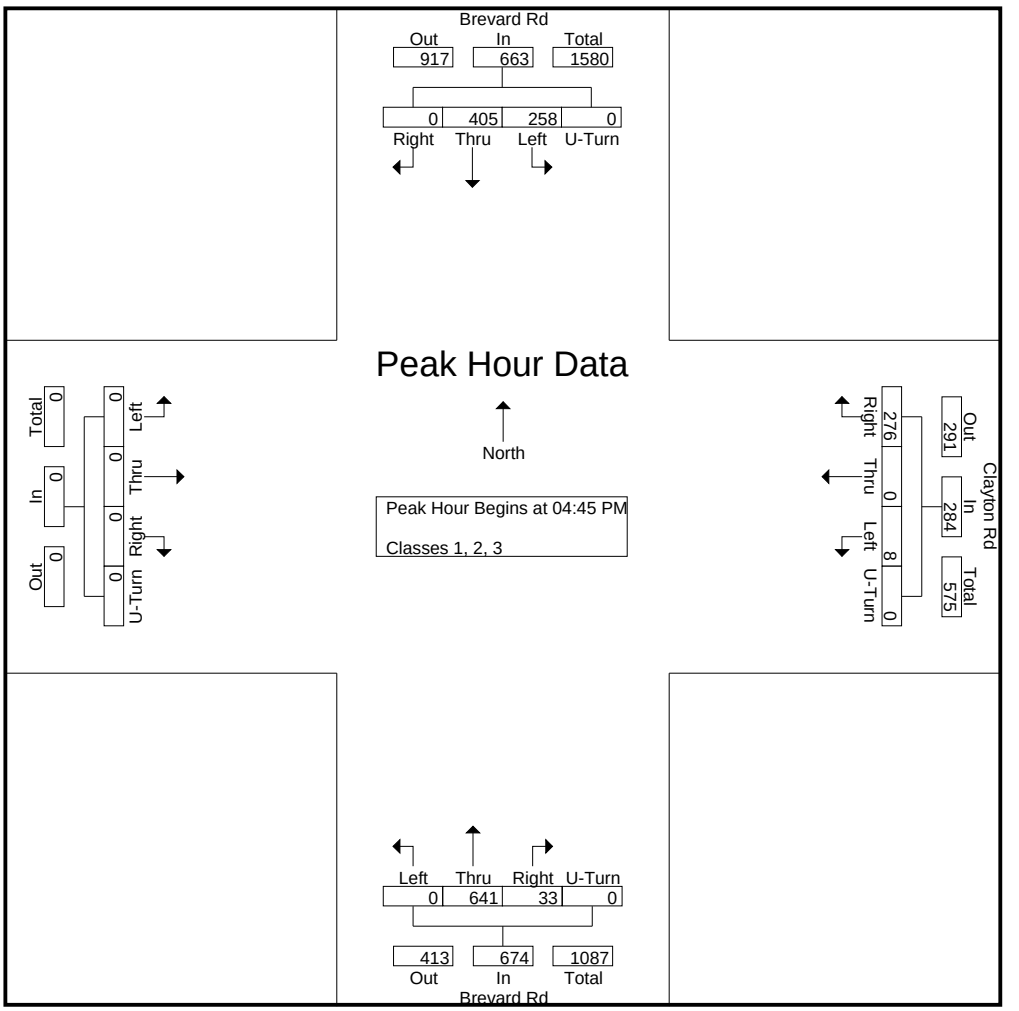

DocuSign Envelope ID: 5C03745C-4B01-4834-A65D-B77F558A4F46

Quality Counts

920 Blairhill Rd, Ste B-106
Charlotte, NC 28217

File Name : 15411711 - Brevard Rd -- Clayton Rd
Site Code : 15411711
Start Date : 4/20/2021
Page No : 1

Groups Printed- Classes 4, 5, 6, 7

	Brevard Rd Southbound					Clayton Rd Westbound					Brevard Rd Northbound					Eastbound					
Start Time	Left	Thru	Right	U-Turn	App. Total	Left	Thru	Right	U-Turn	App. Total	Left	Thru	Right	U-Turn	App. Total	Left	Thru	Right	U-Turn	App. Total	Int. Total
06:00 AM	0	1	0	0	1	0	0	1	0	1	0	6	0	0	6	0	0	0	0	0	8
06:15 AM	1	0	0	0	1	0	0	1	0	1	0	11	0	0	11	0	0	0	0	0	13
06:30 AM	1	2	0	0	3	0	0	0	0	0	0	7	0	0	7	0	0	0	0	0	10
06:45 AM	1	3	0	0	4	0	0	0	0	0	0	4	0	0	4	0	0	0	0	0	8
Total	3	6	0	0	9	0	0	2	0	2	0	28	0	0	28	0	0	0	0	0	39
07:00 AM	1	3	0	0	4	0	0	0	0	0	0	2	0	0	2	0	0	0	0	0	6
07:15 AM	1	3	0	0	4	1	0	2	0	3	0	5	4	0	9	0	0	0	0	0	16
07:30 AM	2	7	0	0	9	1	0	4	0	5	0	4	1	0	5	0	0	0	0	0	19
07:45 AM	1	9	0	0	10	0	0	1	0	1	0	9	0	0	9	0	0	0	0	0	20
Total	5	22	0	0	27	2	0	7	0	9	0	20	5	0	25	0	0	0	0	0	61
08:00 AM	4	6	0	0	10	0	0	1	0	1	0	6	2	0	8	0	0	0	0	0	19
08:15 AM	0	8	0	0	8	1	0	0	0	1	0	9	2	0	11	0	0	0	0	0	20
08:30 AM	2	5	0	0	7	0	0	2	0	2	0	8	0	0	8	0	0	0	0	0	17
08:45 AM	3	7	0	0	10	0	0	3	0	3	0	7	0	0	7	0	0	0	0	0	20
Total	9	26	0	0	35	1	0	6	0	7	0	30	4	0	34	0	0	0	0	0	76
09:00 AM	1	4	0	0	5	1	0	3	0	4	0	8	1	0	9	0	0	0	0	0	18
09:15 AM	2	12	0	0	14	1	0	1	0	2	0	5	2	0	7	0	0	0	0	0	23
09:30 AM	2	3	0	0	5	0	0	3	0	3	0	6	0	0	6	0	0	0	0	0	14
09:45 AM	1	7	0	0	8	0	0	0	0	0	0	9	0	0	9	0	0	0	0	0	17
Total	6	26	0	0	32	2	0	7	0	9	0	28	3	0	31	0	0	0	0	0	72
10:00 AM	0	4	0	0	4	0	0	2	0	2	0	9	0	0	9	0	0	0	0	0	15
10:15 AM	1	9	0	0	10	0	0	2	0	2	0	6	0	0	6	0	0	0	0	0	18
10:30 AM	1	8	0	0	9	1	0	2	0	3	0	7	1	0	8	0	0	0	0	0	20
10:45 AM	3	5	0	0	8	0	0	4	0	4	0	11	1	0	12	0	0	0	0	0	24
Total	5	26	0	0	31	1	0	10	0	11	0	33	2	0	35	0	0	0	0	0	77
11:00 AM	2	10	0	0	12	1	0	2	0	3	0	6	0	0	6	0	0	0	0	0	21
11:15 AM	2	8	0	0	10	2	0	3	0	5	0	7	1	0	8	0	0	0	0	0	23
11:30 AM	1	8	0	0	9	0	0	2	0	2	0	10	1	0	11	0	0	0	0	0	22
11:45 AM	1	5	0	0	6	0	0	1	0	1	0	5	0	0	5	0	0	0	0	0	12
Total	6	31	0	0	37	3	0	8	0	11	0	28	2	0	30	0	0	0	0	0	78
12:00 PM	1	8	0	0	9	0	0	1	0	1	0	9	0	0	9	0	0	0	0	0	19
12:15 PM	1	4	0	0	5	0	0	1	0	1	0	6	0	0	6	0	0	0	0	0	12
12:30 PM	1	3	0	0	4	0	0	1	0	1	0	10	0	0	10	0	0	0	0	0	15
12:45 PM	2	4	0	0	6	0	0	2	0	2	0	7	0	0	7	0	0	0	0	0	15
Total	5	19	0	0	24	0	0	5	0	5	0	32	0	0	32	0	0	0	0	0	61
01:00 PM	0	10	0	0	10	0	0	2	0	2	0	4	0	0	4	0	0	0	0	0	16
01:15 PM	2	4	0	0	6	0	0	4	0	4	0	8	0	0	8	0	0	0	0	0	18
01:30 PM	2	9	0	0	11	0	0	1	0	1	0	7	0	0	7	0	0	0	0	0	19
01:45 PM	0	6	0	0	6	0	0	2	0	2	0	6	1	0	7	0	0	0	0	0	15
Total	4	29	0	0	33	0	0	9	0	9	0	25	1	0	26	0	0	0	0	0	68
02:00 PM	4	7	0	0	11	1	0	0	0	1	0	6	0	0	6	0	0	0	0	0	18
02:15 PM	2	6	0	0	8	0	0	1	0	1	0	6	0	0	6	0	0	0	0	0	15
02:30 PM	0	6	0	0	6	0	0	2	0	2	0	9	1	0	10	0	0	0	0	0	18
02:45 PM	0	5	0	0	5	0	0	3	0	3	0	5	1	0	6	0	0	0	0	0	14
Total	6	24	0	0	30	1	0	6	0	7	0	26	2	0	28	0	0	0	0	0	65
03:00 PM	2	7	0	0	9	0	0	3	0	3	0	9	0	0	9	0	0	0	0	0	21
03:15 PM	1	10	0	0	11	0	0	2	0	2	0	12	1	0	13	0	0	0	0	0	26
03:30 PM	2	10	0	0	12	0	0	5	0	5	0	9	0	0	9	0	0	0	0	0	26

DocuSign Envelope ID: 5C03745C-4B01-4834-A65D-B77F558A4F46

Quality Counts

920 Blairhill Rd, Ste B-106
Charlotte, NC 28217

File Name : 15411711 - Brevard Rd -- Clayton Rd
Site Code : 15411711
Start Date : 4/20/2021

Groups Printed- Classes 4, 5, 6, 7

	Brevard Rd Southbound					Clayton Rd Westbound					Brevard Rd Northbound					Eastbound					
Start Time	Left	Thru	Right	U-Turn	App. Total	Left	Thru	Right	U-Turn	App. Total	Left	Thru	Right	U-Turn	App. Total	Left	Thru	Right	U-Turn	App. Total	Int. Total
03:45 PM	2	9	0	0	11	0	0	3	0	3	0	10	2	0	12	0	0	0	0	0	26
Total	7	36	0	0	43	0	0	13	0	13	0	40	3	0	43	0	0	0	0	0	99
04:00 PM	7	8	0	0	15	0	0	5	0	5	0	9	0	0	9	0	0	0	0	0	29
04:15 PM	2	8	0	0	10	0	0	2	0	2	0	9	1	0	10	0	0	0	0	0	22
04:30 PM	0	6	0	0	6	0	0	4	0	4	0	9	0	0	9	0	0	0	0	0	19
04:45 PM	2	4	0	0	6	0	0	1	0	1	0	6	1	0	7	0	0	0	0	0	14
Total	11	26	0	0	37	0	0	12	0	12	0	33	2	0	35	0	0	0	0	0	84
05:00 PM	1	5	0	0	6	0	0	3	0	3	0	13	0	0	13	0	0	0	0	0	22
05:15 PM	1	3	0	0	4	0	0	2	0	2	0	10	0	0	10	0	0	0	0	0	16
05:30 PM	1	3	0	0	4	0	0	3	0	3	0	5	0	0	5	0	0	0	0	0	12
05:45 PM	2	3	0	0	5	0	0	3	0	3	0	4	1	0	5	0	0	0	0	0	13
Total	5	14	0	0	19	0	0	11	0	11	0	32	1	0	33	0	0	0	0	0	63
06:00 PM	2	4	0	0	6	0	0	3	0	3	0	5	0	0	5	0	0	0	0	0	14
06:15 PM	3	2	0	0	5	0	0	1	0	1	0	2	0	0	2	0	0	0	0	0	8
06:30 PM	1	4	0	0	5	0	0	0	0	0	0	3	0	0	3	0	0	0	0	0	8
06:45 PM	0	0	0	0	0	0	0	1	0	1	0	4	0	0	4	0	0	0	0	0	5
Total	6	10	0	0	16	0	0	5	0	5	0	14	0	0	14	0	0	0	0	0	35
Grand Total	78	295	0	0	373	10	0	101	0	111	0	369	25	0	394	0	0	0	0	0	878
Apprch %	20.9	79.1	0	0		9	0	91	0		0	93.7	6.3	0		0	0	0	0		
Total %	8.9	33.6	0	0	42.5	1.1	0	11.5	0	12.6	0	42	2.8	0	44.9	0	0	0	0	0	

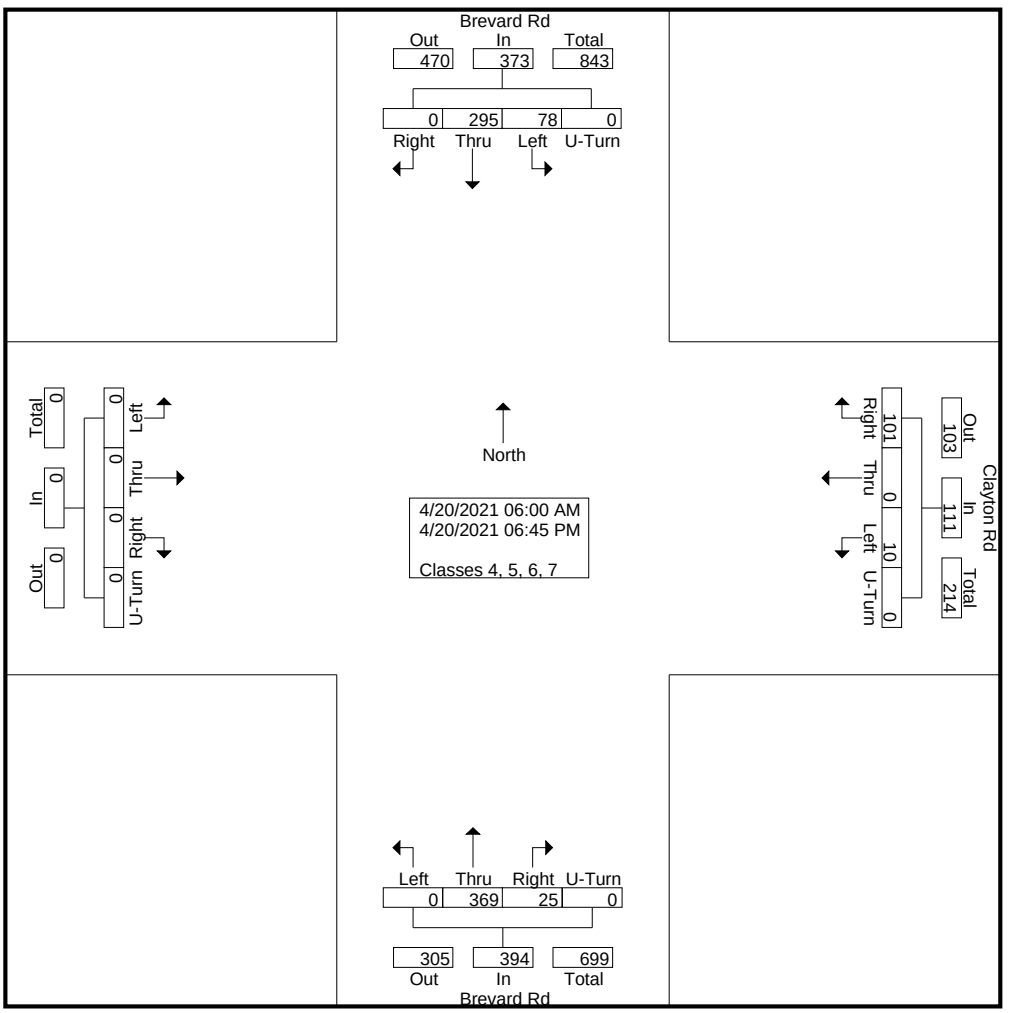

DocuSign Envelope ID: 5C03745C-4B01-4834-A65D-B77F558A4F46

Quality Counts

920 Blairhill Rd, Ste B-106
Charlotte, NC 28217

File Name : 15411711 - Brevard Rd -- Clayton Rd
Site Code : 15411711
Start Date : 4/20/2021
Page No : 3

	Brevard Rd Southbound					Clayton Rd Westbound					Brevard Rd Northbound					Eastbound					
Start Time	Left	Thru	Right	U-Turn	App. Total	Left	Thru	Right	U-Turn	App. Total	Left	Thru	Right	U-Turn	App. Total	Left	Thru	Right	U-Turn	App. Total	Int. Total
Peak Hour Analysis From 06:00 AM to 11:45 AM - Peak 1 of 1																					
Peak Hour for Entire Intersection Begins at 10:45 AM																					
10:45 AM	**3**	5	0	0	8	0	0	**4**	0	4	0	**11**	**1**	0	**12**	0	0	0	0	0	**24**
11:00 AM	2	**10**	0	0	**12**	1	0	2	0	3	0	6	0	0	6	0	0	0	0	0	21
11:15 AM	2	8	0	0	10	**2**	0	3	0	**5**	0	7	1	0	8	0	0	0	0	0	23
11:30 AM	1	8	0	0	9	0	0	2	0	2	0	10	1	0	11	0	0	0	0	0	22
Total Volume	8	31	0	0	39	3	0	11	0	14	0	34	3	0	37	0	0	0	0	0	90
% App. Total	20.5	79.5	0	0		21.4	0	78.6	0		0	91.9	8.1	0		0	0	0	0		
PHF	.667	.775	.000	.000	.813	.375	.000	.688	.000	.700	.000	.773	.750	.000	.771	.000	.000	.000	.000	.000	.938

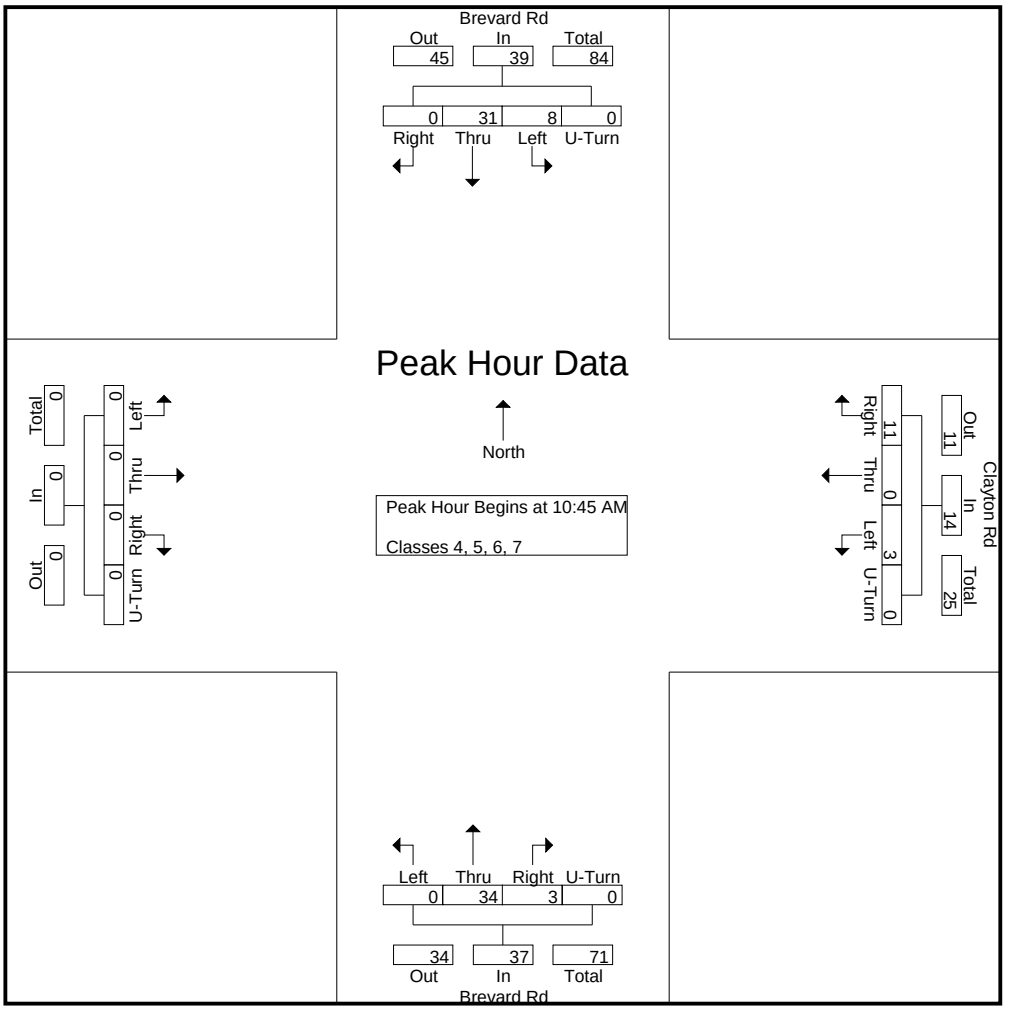

DocuSign Envelope ID: 5C03745C-4B01-4834-A65D-B77F558A4F46

Quality Counts

920 Blairhill Rd, Ste B-106
Charlotte, NC 28217

File Name : 15411711 - Brevard Rd -- Clayton Rd
Site Code : 15411711
Start Date : 4/20/2021
Page No : 4

	Brevard Rd Southbound					Clayton Rd Westbound					Brevard Rd Northbound					Eastbound					
Start Time	Left	Thru	Right	U-Turn	App. Total	Left	Thru	Right	U-Turn	App. Total	Left	Thru	Right	U-Turn	App. Total	Left	Thru	Right	U-Turn	App. Total	Int. Total
Peak Hour Analysis From 12:00 PM to 06:45 PM - Peak 1 of 1																					
Peak Hour for Entire Intersection Begins at 03:15 PM																					
03:15 PM	1	**10**	0	0	11	0	0	2	0	2	0	**12**	1	0	**13**	0	0	0	0	0	26
03:30 PM	2	10	0	0	12	0	0	**5**	0	**5**	0	9	0	0	9	0	0	0	0	0	26
03:45 PM	2	9	0	0	11	0	0	3	0	3	0	10	**2**	0	12	0	0	0	0	0	26
04:00 PM	**7**	8	0	0	**15**	0	0	5	0	5	0	9	0	0	9	0	0	0	0	0	**29**
Total Volume	12	37	0	0	49	0	0	15	0	15	0	40	3	0	43	0	0	0	0	0	107
% App. Total	24.5	75.5	0	0		0	0	100	0		0	93	7	0		0	0	0	0		
PHF	.429	.925	.000	.000	.817	.000	.000	.750	.000	.750	.000	.833	.375	.000	.827	.000	.000	.000	.000	.000	.922

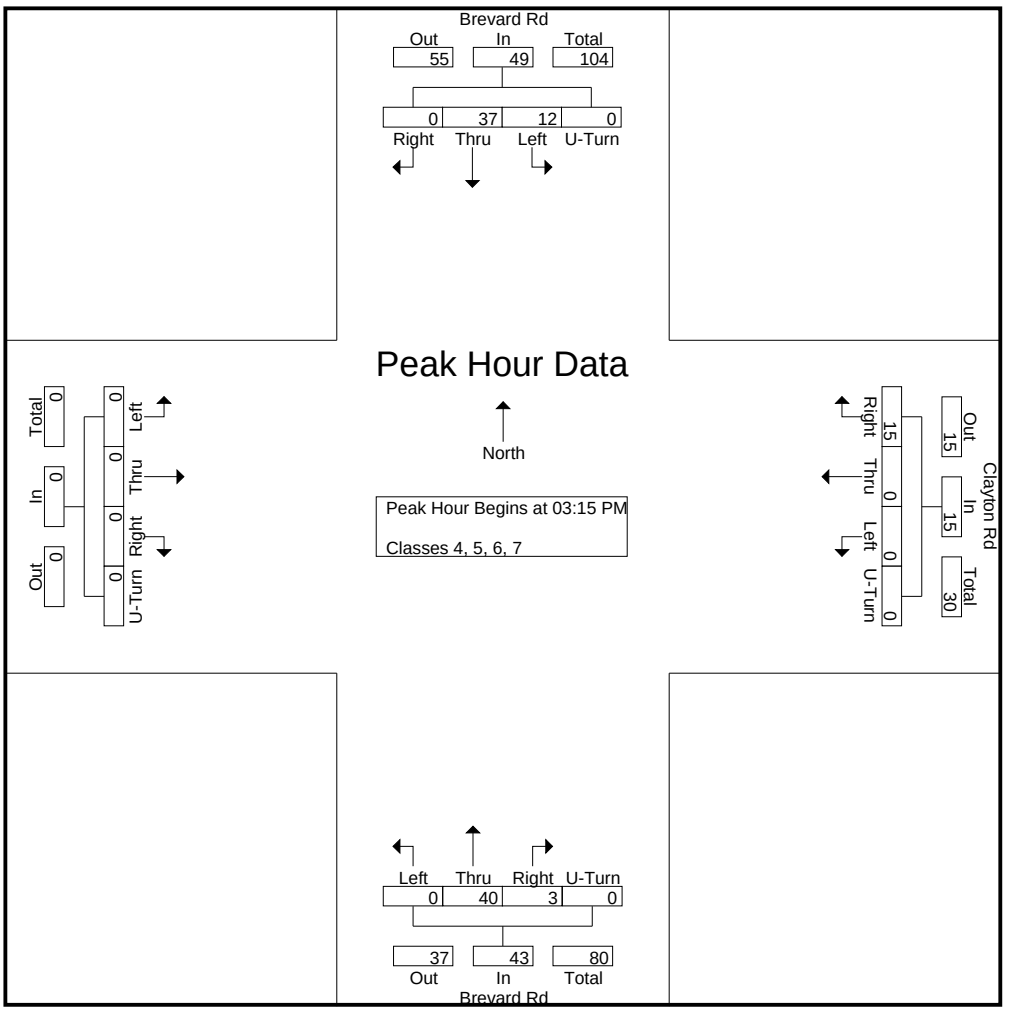

DocuSign Envelope ID: 5C03745C-4B01-4834-A65D-B77F558A4F46

Quality Counts

920 Blairhill Rd, Ste B-106
Charlotte, NC 28217

File Name : 15411711 - Brevard Rd -- Clayton Rd
Site Code : 15411711
Start Date : 4/20/2021
Page No : 1

Groups Printed- Classes 8, 9, 10

	Brevard Rd Southbound					Clayton Rd Westbound					Brevard Rd Northbound					Eastbound					
Start Time	Left	Thru	Right	U-Turn	App. Total	Left	Thru	Right	U-Turn	App. Total	Left	Thru	Right	U-Turn	App. Total	Left	Thru	Right	U-Turn	App. Total	Int. Total
06:00 AM	0	1	0	0	1	0	0	0	0	0	0	1	0	0	1	0	0	0	0	0	2
06:15 AM	0	0	0	0	0	0	0	0	0	0	0	0	0	0	0	0	0	0	0	0	0
06:30 AM	0	0	0	0	0	0	0	0	0	0	0	0	0	0	0	0	0	0	0	0	0
06:45 AM	0	0	0	0	0	0	0	0	0	0	0	1	0	0	1	0	0	0	0	0	1
Total	0	1	0	0	1	0	0	0	0	0	0	2	0	0	2	0	0	0	0	0	3
07:00 AM	1	0	0	0	1	0	0	0	0	0	0	1	0	0	1	0	0	0	0	0	2
07:15 AM	0	1	0	0	1	0	0	0	0	0	0	1	0	0	1	0	0	0	0	0	2
07:30 AM	0	1	0	0	1	0	0	0	0	0	0	0	0	0	0	0	0	0	0	0	1
07:45 AM	2	1	0	0	3	0	0	0	0	0	0	1	0	0	1	0	0	0	0	0	4
Total	3	3	0	0	6	0	0	0	0	0	0	3	0	0	3	0	0	0	0	0	9
08:00 AM	0	0	0	0	0	0	0	0	0	0	0	4	0	0	4	0	0	0	0	0	4
08:15 AM	0	2	0	0	2	0	0	0	0	0	0	1	0	0	1	0	0	0	0	0	3
08:30 AM	0	1	0	0	1	0	0	0	0	0	0	0	0	0	0	0	0	0	0	0	1
08:45 AM	1	2	0	0	3	0	0	2	0	2	0	0	1	0	1	0	0	0	0	0	6
Total	1	5	0	0	6	0	0	2	0	2	0	5	1	0	6	0	0	0	0	0	14
09:00 AM	0	2	0	0	2	0	0	0	0	0	0	1	0	0	1	0	0	0	0	0	3
09:15 AM	0	3	0	0	3	0	0	0	0	0	0	2	0	0	2	0	0	0	0	0	5
09:30 AM	0	2	0	0	2	0	0	1	0	1	0	2	0	0	2	0	0	0	0	0	5
09:45 AM	0	1	0	0	1	0	0	0	0	0	0	2	0	0	2	0	0	0	0	0	3
Total	0	8	0	0	8	0	0	1	0	1	0	7	0	0	7	0	0	0	0	0	16
10:00 AM	2	2	0	0	4	0	0	0	0	0	0	4	0	0	4	0	0	0	0	0	8
10:15 AM	0	1	0	0	1	0	0	0	0	0	0	2	0	0	2	0	0	0	0	0	3
10:30 AM	0	4	0	0	4	0	0	0	0	0	0	3	0	0	3	0	0	0	0	0	7
10:45 AM	0	3	0	0	3	0	0	0	0	0	0	1	0	0	1	0	0	0	0	0	4
Total	2	10	0	0	12	0	0	0	0	0	0	10	0	0	10	0	0	0	0	0	22
11:00 AM	0	1	0	0	1	0	0	1	0	1	0	2	0	0	2	0	0	0	0	0	4
11:15 AM	1	0	0	0	1	0	0	1	0	1	0	2	0	0	2	0	0	0	0	0	4
11:30 AM	0	0	0	0	0	0	0	1	0	1	0	1	0	0	1	0	0	0	0	0	2
11:45 AM	0	0	0	0	0	0	0	0	0	0	0	3	0	0	3	0	0	0	0	0	3
Total	1	1	0	0	2	0	0	3	0	3	0	8	0	0	8	0	0	0	0	0	13
12:00 PM	0	0	0	0	0	0	0	1	0	1	0	2	0	0	2	0	0	0	0	0	3
12:15 PM	0	2	0	0	2	0	0	0	0	0	0	1	0	0	1	0	0	0	0	0	3
12:30 PM	0	1	0	0	1	0	0	0	0	0	0	3	0	0	3	0	0	0	0	0	4
12:45 PM	0	2	0	0	2	0	0	0	0	0	0	3	0	0	3	0	0	0	0	0	5
Total	0	5	0	0	5	0	0	1	0	1	0	9	0	0	9	0	0	0	0	0	15
01:00 PM	0	0	0	0	0	0	0	2	0	2	0	1	0	0	1	0	0	0	0	0	3
01:15 PM	0	0	0	0	0	0	0	0	0	0	0	0	0	0	0	0	0	0	0	0	0
01:30 PM	1	1	0	0	2	0	0	0	0	0	0	2	0	0	2	0	0	0	0	0	4
01:45 PM	0	0	0	0	0	0	0	0	0	0	0	0	0	0	0	0	0	0	0	0	0
Total	1	1	0	0	2	0	0	2	0	2	0	3	0	0	3	0	0	0	0	0	7
02:00 PM	0	2	0	0	2	0	0	0	0	0	0	2	0	0	2	0	0	0	0	0	4
02:15 PM	0	1	0	0	1	0	0	0	0	0	0	0	0	0	0	0	0	0	0	0	1
02:30 PM	1	3	0	0	4	0	0	1	0	1	0	4	0	0	4	0	0	0	0	0	9
02:45 PM	0	1	0	0	1	0	0	0	0	0	0	1	0	0	1	0	0	0	0	0	2
Total	1	7	0	0	8	0	0	1	0	1	0	7	0	0	7	0	0	0	0	0	16
03:00 PM	0	0	0	0	0	0	0	0	0	0	0	3	0	0	3	0	0	0	0	0	3
03:15 PM	0	3	0	0	3	0	0	0	0	0	0	2	0	0	2	0	0	0	0	0	5
03:30 PM	0	2	0	0	2	0	0	1	0	1	0	2	0	0	2	0	0	0	0	0	5

DocuSign Envelope ID: 5C03745C-4B01-4834-A65D-B77F558A4F46

Quality Counts

920 Blairhill Rd, Ste B-106
Charlotte, NC 28217

File Name : 15411711 - Brevard Rd -- Clayton Rd
Site Code : 15411711
Start Date : 4/20/2021
Page No : 2

Groups Printed- Classes 8, 9, 10

	Brevard Rd Southbound					Clayton Rd Westbound					Brevard Rd Northbound					Eastbound					
Start Time	Left	Thru	Right	U-Turn	App. Total	Left	Thru	Right	U-Turn	App. Total	Left	Thru	Right	U-Turn	App. Total	Left	Thru	Right	U-Turn	App. Total	Int. Total
03:45 PM	0	0	0	0	0	0	0	0	0	0	0	1	0	0	1	0	0	0	0	0	1
Total	0	5	0	0	5	0	0	1	0	1	0	8	0	0	8	0	0	0	0	0	14
04:00 PM	0	1	0	0	1	0	0	0	0	0	0	0	0	0	0	0	0	0	0	0	1
04:15 PM	0	1	0	0	1	0	0	0	0	0	0	3	0	0	3	0	0	0	0	0	4
04:30 PM	0	1	0	0	1	0	0	0	0	0	0	0	0	0	0	0	0	0	0	0	1
04:45 PM	0	0	0	0	0	0	0	0	0	0	0	3	0	0	3	0	0	0	0	0	3
Total	0	3	0	0	3	0	0	0	0	0	0	6	0	0	6	0	0	0	0	0	9
05:00 PM	0	1	0	0	1	0	0	0	0	0	0	1	0	0	1	0	0	0	0	0	2
05:15 PM	3	1	0	0	4	1	0	0	0	1	0	1	0	0	1	0	0	0	0	0	6
05:30 PM	0	0	0	0	0	0	0	0	0	0	0	1	0	0	1	0	0	0	0	0	1
05:45 PM	0	2	0	0	2	0	0	0	0	0	0	1	0	0	1	0	0	0	0	0	3
Total	3	4	0	0	7	1	0	0	0	1	0	4	0	0	4	0	0	0	0	0	12
06:00 PM	0	0	0	0	0	0	0	0	0	0	0	1	0	0	1	0	0	0	0	0	1
06:15 PM	0	0	0	0	0	0	0	0	0	0	0	0	0	0	0	0	0	0	0	0	0
06:30 PM	0	0	0	0	0	0	0	0	0	0	0	0	0	0	0	0	0	0	0	0	0
06:45 PM	0	1	0	0	1	0	0	0	0	0	0	0	0	0	0	0	0	0	0	0	1
Total	0	1	0	0	1	0	0	0	0	0	0	1	0	0	1	0	0	0	0	0	2
Grand Total	12	54	0	0	66	1	0	11	0	12	0	73	1	0	74	0	0	0	0	0	152
Apprch %	18.2	81.8	0	0		8.3	0	91.7	0		0	98.6	1.4	0		0	0	0	0		
Total %	7.9	35.5	0	0	43.4	0.7	0	7.2	0	7.9	0	48	0.7	0	48.7	0	0	0	0	0	

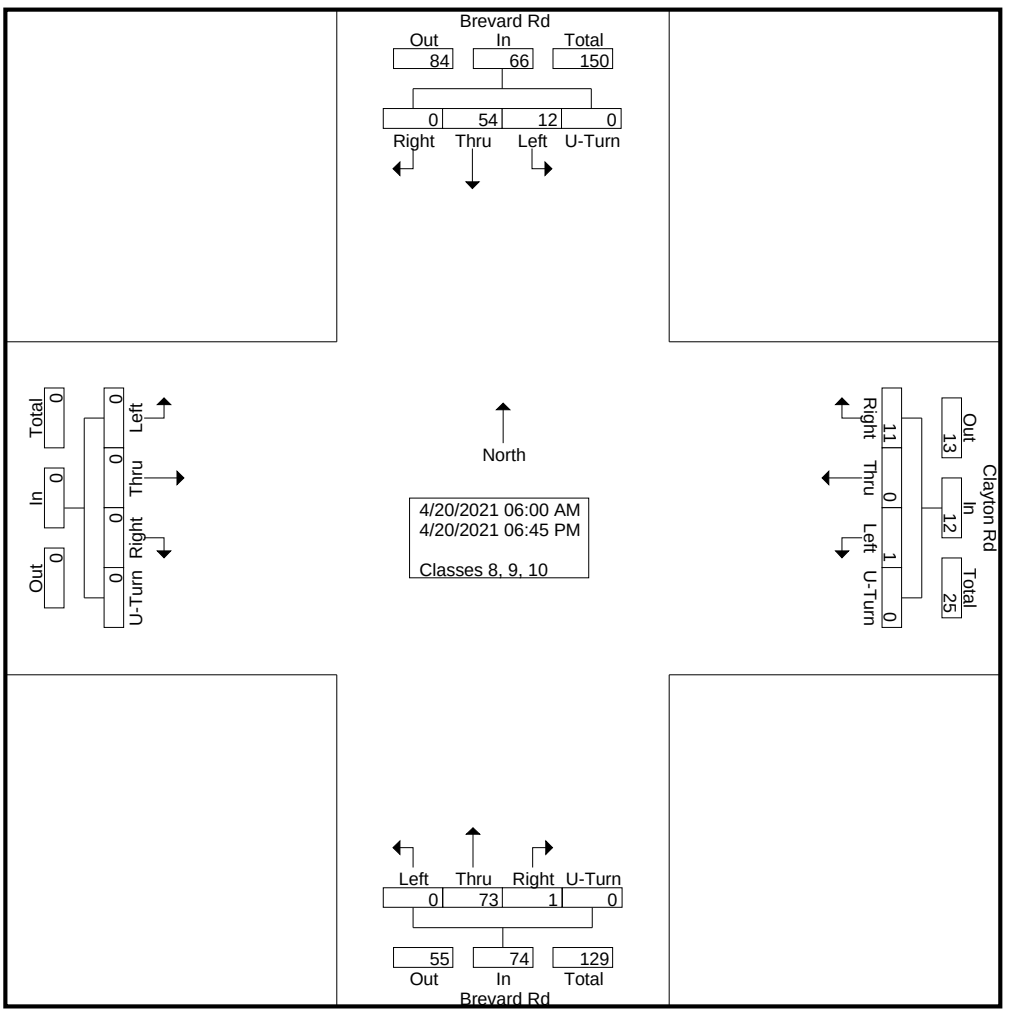

DocuSign Envelope ID: 5C03745C-4B01-4834-A65D-B77F558A4F46

Quality Counts

920 Blairhill Rd, Ste B-106
Charlotte, NC 28217

File Name : 15411711 - Brevard Rd -- Clayton Rd
Site Code : 15411711
Start Date : 4/20/2021
Page No : 3

	Brevard Rd Southbound					Clayton Rd Westbound					Brevard Rd Northbound					Eastbound					
Start Time	Left	Thru	Right	U-Turn	App. Total	Left	Thru	Right	U-Turn	App. Total	Left	Thru	Right	U-Turn	App. Total	Left	Thru	Right	U-Turn	App. Total	Int. Total
Peak Hour Analysis From 06:00 AM to 11:45 AM - Peak 1 of 1																					
Peak Hour for Entire Intersection Begins at 10:00 AM																					
10:00 AM	**2**	2	0	0	**4**	0	0	0	0	0	0	**4**	0	0	**4**	0	0	0	0	0	**8**
10:15 AM	0	1	0	0	1	0	0	0	0	0	0	2	0	0	2	0	0	0	0	0	3
10:30 AM	0	**4**	0	0	4	0	0	0	0	0	0	3	0	0	3	0	0	0	0	0	7
10:45 AM	0	3	0	0	3	0	0	0	0	0	0	1	0	0	1	0	0	0	0	0	4
Total Volume	2	10	0	0	12	0	0	0	0	0	0	10	0	0	10	0	0	0	0	0	22
% App. Total	16.7	83.3	0	0		0	0	0	0		0	100	0	0		0	0	0	0		
PHF	.250	.625	.000	.000	.750	.000	.000	.000	.000	.000	.000	.625	.000	.000	.625	.000	.000	.000	.000	.000	.688

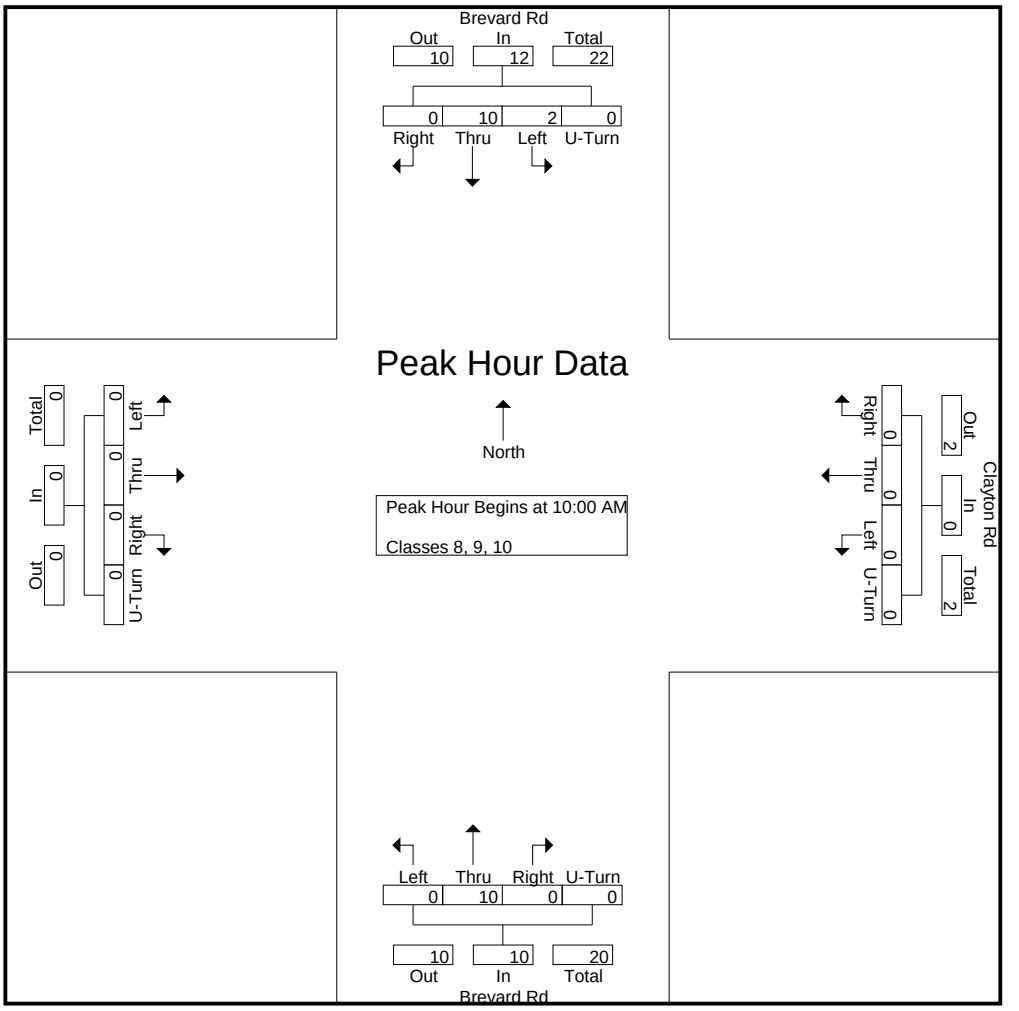

DocuSign Envelope ID: 5C03745C-4B01-4834-A65D-B77F558A4F46

Quality Counts

920 Blairhill Rd, Ste B-106
Charlotte, NC 28217

File Name : 15411711 - Brevard Rd -- Clayton Rd
Site Code : 15411711
Start Date : 4/20/2021

	Brevard Rd Southbound					Clayton Rd Westbound					Brevard Rd Northbound					Eastbound					
Start Time	Left	Thru	Right	U-Turn	App. Total	Left	Thru	Right	U-Turn	App. Total	Left	Thru	Right	U-Turn	App. Total	Left	Thru	Right	U-Turn	App. Total	Int. Total
Peak Hour Analysis From 12:00 PM to 06:45 PM - Peak 1 of 1																					
Peak Hour for Entire Intersection Begins at 02:30 PM																					
02:30 PM	**1**	**3**	0	0	**4**	0	0	**1**	0	**1**	0	**4**	0	0	**4**	0	0	0	0	0	**9**
02:45 PM	0	1	0	0	1	0	0	0	0	0	0	1	0	0	1	0	0	0	0	0	2
03:00 PM	0	0	0	0	0	0	0	0	0	0	0	3	0	0	3	0	0	0	0	0	3
03:15 PM	0	3	0	0	3	0	0	0	0	0	0	2	0	0	2	0	0	0	0	0	5
Total Volume	1	7	0	0	8	0	0	1	0	1	0	10	0	0	10	0	0	0	0	0	19
% App. Total	12.5	87.5	0	0		0	0	100	0		0	100	0	0		0	0	0	0		
PHF	.250	.583	.000	.000	.500	.000	.000	.250	.000	.250	.000	.625	.000	.000	.625	.000	.000	.000	.000	.000	.528

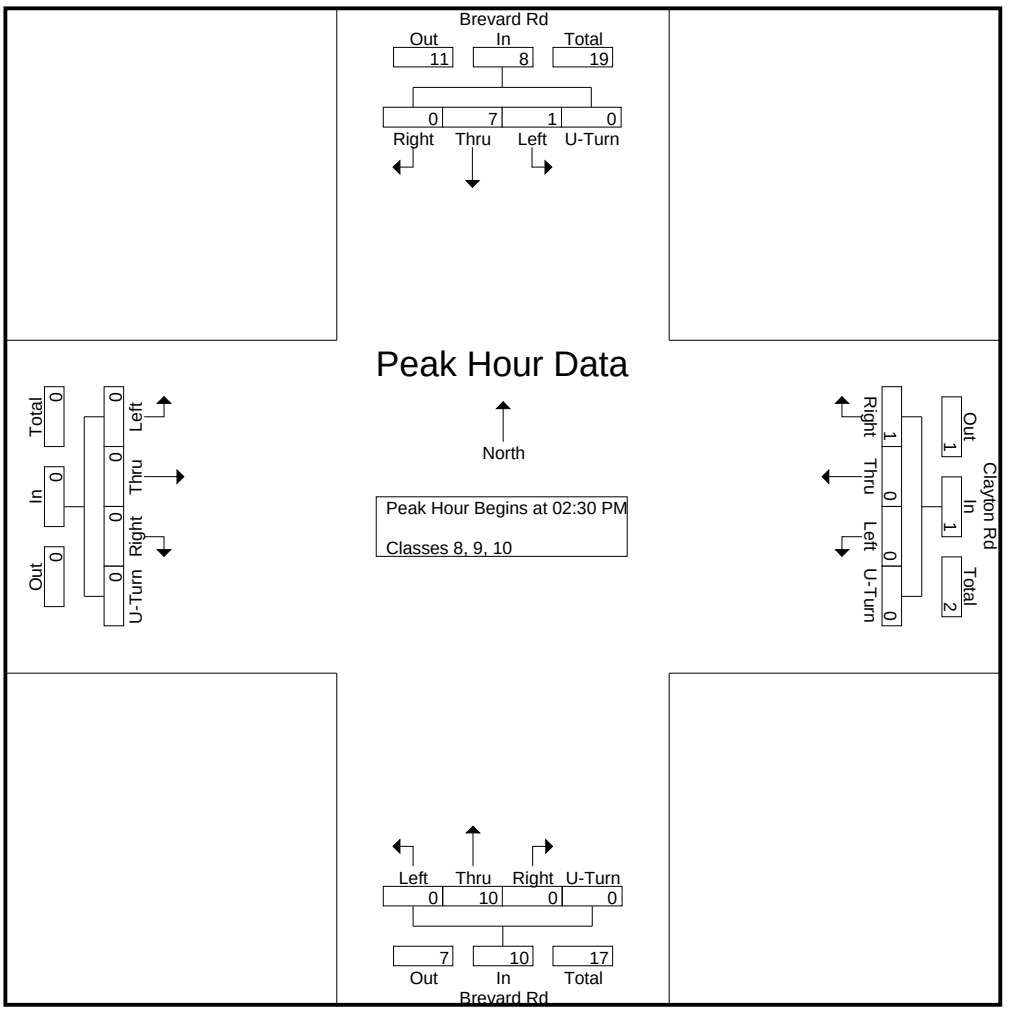

DocuSign Envelope ID: 5C03745C-4B01-4834-A65D-B77F558A4F46

Quality Counts

920 Blairhill Rd, Ste B-106
Charlotte, NC 28217

File Name : 15411711 - Brevard Rd -- Clayton Rd
Site Code : 15411711
Start Date : 4/20/2021
Page No : 1

Groups Printed- Classes 11, 12, 13

	Brevard Rd Southbound					Clayton Rd Westbound					Brevard Rd Northbound					Eastbound					
Start Time	Left	Thru	Right	U-Turn	App. Total	Left	Thru	Right	U-Turn	App. Total	Left	Thru	Right	U-Turn	App. Total	Left	Thru	Right	U-Turn	App. Total	Int. Total
06:00 AM	0	0	0	0	0	0	0	0	0	0	0	0	0	0	0	0	0	0	0	0	0
06:15 AM	0	0	0	0	0	0	0	0	0	0	0	0	0	0	0	0	0	0	0	0	0
06:30 AM	0	0	0	0	0	0	0	0	0	0	0	0	0	0	0	0	0	0	0	0	0
06:45 AM	0	0	0	0	0	0	0	0	0	0	0	0	0	0	0	0	0	0	0	0	0
Total	0	0	0	0	0	0	0	0	0	0	0	0	0	0	0	0	0	0	0	0	0
07:00 AM	0	0	0	0	0	0	0	0	0	0	0	0	0	0	0	0	0	0	0	0	0
07:15 AM	0	0	0	0	0	0	0	0	0	0	0	0	0	0	0	0	0	0	0	0	0
07:30 AM	0	0	0	0	0	0	0	0	0	0	0	0	0	0	0	0	0	0	0	0	0
07:45 AM	0	0	0	0	0	0	0	0	0	0	0	0	0	0	0	0	0	0	0	0	0
Total	0	0	0	0	0	0	0	0	0	0	0	0	0	0	0	0	0	0	0	0	0
08:00 AM	0	0	0	0	0	0	0	0	0	0	0	0	0	0	0	0	0	0	0	0	0
08:15 AM	0	0	0	0	0	0	0	0	0	0	0	0	0	0	0	0	0	0	0	0	0
08:30 AM	0	0	0	0	0	0	0	0	0	0	0	0	0	0	0	0	0	0	0	0	0
08:45 AM	0	0	0	0	0	0	0	0	0	0	0	0	0	0	0	0	0	0	0	0	0
Total	0	0	0	0	0	0	0	0	0	0	0	0	0	0	0	0	0	0	0	0	0
09:00 AM	0	0	0	0	0	0	0	0	0	0	0	0	0	0	0	0	0	0	0	0	0
09:15 AM	0	0	0	0	0	0	0	0	0	0	0	0	0	0	0	0	0	0	0	0	0
09:30 AM	0	0	0	0	0	0	0	0	0	0	0	0	0	0	0	0	0	0	0	0	0
09:45 AM	0	0	0	0	0	0	0	0	0	0	0	0	0	0	0	0	0	0	0	0	0
Total	0	0	0	0	0	0	0	0	0	0	0	0	0	0	0	0	0	0	0	0	0
10:00 AM	0	0	0	0	0	0	0	0	0	0	0	0	0	0	0	0	0	0	0	0	0
10:15 AM	0	0	0	0	0	0	0	0	0	0	0	0	0	0	0	0	0	0	0	0	0
10:30 AM	0	0	0	0	0	0	0	0	0	0	0	0	0	0	0	0	0	0	0	0	0
10:45 AM	0	0	0	0	0	0	0	0	0	0	0	0	0	0	0	0	0	0	0	0	0
Total	0	0	0	0	0	0	0	0	0	0	0	0	0	0	0	0	0	0	0	0	0
11:00 AM	0	0	0	0	0	0	0	0	0	0	0	0	0	0	0	0	0	0	0	0	0
11:15 AM	0	0	0	0	0	0	0	0	0	0	0	0	0	0	0	0	0	0	0	0	0
11:30 AM	0	0	0	0	0	0	0	0	0	0	0	0	0	0	0	0	0	0	0	0	0
11:45 AM	0	0	0	0	0	0	0	0	0	0	0	0	0	0	0	0	0	0	0	0	0
Total	0	0	0	0	0	0	0	0	0	0	0	0	0	0	0	0	0	0	0	0	0
12:00 PM	0	0	0	0	0	0	0	0	0	0	0	0	0	0	0	0	0	0	0	0	0
12:15 PM	0	0	0	0	0	0	0	0	0	0	0	0	0	0	0	0	0	0	0	0	0
12:30 PM	0	0	0	0	0	0	0	0	0	0	0	0	0	0	0	0	0	0	0	0	0
12:45 PM	0	0	0	0	0	0	0	0	0	0	0	0	0	0	0	0	0	0	0	0	0
Total	0	0	0	0	0	0	0	0	0	0	0	0	0	0	0	0	0	0	0	0	0
01:00 PM	0	0	0	0	0	0	0	0	0	0	0	0	0	0	0	0	0	0	0	0	0
01:15 PM	0	0	0	0	0	0	0	0	0	0	0	0	0	0	0	0	0	0	0	0	0
01:30 PM	0	0	0	0	0	0	0	0	0	0	0	0	0	0	0	0	0	0	0	0	0
01:45 PM	0	0	0	0	0	0	0	0	0	0	0	0	0	0	0	0	0	0	0	0	0
Total	0	0	0	0	0	0	0	0	0	0	0	0	0	0	0	0	0	0	0	0	0
02:00 PM	0	0	0	0	0	0	0	0	0	0	0	0	0	0	0	0	0	0	0	0	0
02:15 PM	0	0	0	0	0	0	0	0	0	0	0	0	0	0	0	0	0	0	0	0	0
02:30 PM	0	0	0	0	0	0	0	0	0	0	0	0	0	0	0	0	0	0	0	0	0
02:45 PM	0	0	0	0	0	0	0	0	0	0	0	0	0	0	0	0	0	0	0	0	0
Total	0	0	0	0	0	0	0	0	0	0	0	0	0	0	0	0	0	0	0	0	0
03:00 PM	0	0	0	0	0	0	0	0	0	0	0	0	0	0	0	0	0	0	0	0	0
03:15 PM	0	0	0	0	0	0	0	0	0	0	0	0	0	0	0	0	0	0	0	0	0
03:30 PM	0	0	0	0	0	0	0	0	0	0	0	0	0	0	0	0	0	0	0	0	0

DocuSign Envelope ID: 5C03745C-4B01-4834-A65D-B77F558A4F46

Quality Counts

920 Blairhill Rd, Ste B-106
Charlotte, NC 28217

File Name : 15411711 - Brevard Rd -- Clayton Rd
Site Code : 15411711
Start Date : 4/20/2021

Groups Printed- Classes 11, 12, 13

	Brevard Rd Southbound					Clayton Rd Westbound					Brevard Rd Northbound					Eastbound					
Start Time	Left	Thru	Right	U-Turn	App. Total	Left	Thru	Right	U-Turn	App. Total	Left	Thru	Right	U-Turn	App. Total	Left	Thru	Right	U-Turn	App. Total	Int. Total
03:45 PM	0	0	0	0	0	0	0	0	0	0	0	0	0	0	0	0	0	0	0	0	0
Total	0	0	0	0	0	0	0	0	0	0	0	0	0	0	0	0	0	0	0	0	0
04:00 PM	0	0	0	0	0	0	0	0	0	0	0	0	0	0	0	0	0	0	0	0	0
04:15 PM	0	0	0	0	0	0	0	0	0	0	0	0	0	0	0	0	0	0	0	0	0
04:30 PM	0	0	0	0	0	0	0	0	0	0	0	0	0	0	0	0	0	0	0	0	0
04:45 PM	0	0	0	0	0	0	0	0	0	0	0	0	0	0	0	0	0	0	0	0	0
Total	0	0	0	0	0	0	0	0	0	0	0	0	0	0	0	0	0	0	0	0	0
05:00 PM	0	0	0	0	0	0	0	0	0	0	0	0	0	0	0	0	0	0	0	0	0
05:15 PM	0	0	0	0	0	0	0	0	0	0	0	0	0	0	0	0	0	0	0	0	0
05:30 PM	0	0	0	0	0	0	0	0	0	0	0	0	0	0	0	0	0	0	0	0	0
05:45 PM	0	0	0	0	0	0	0	0	0	0	0	0	0	0	0	0	0	0	0	0	0
Total	0	0	0	0	0	0	0	0	0	0	0	0	0	0	0	0	0	0	0	0	0
06:00 PM	0	0	0	0	0	0	0	0	0	0	0	0	0	0	0	0	0	0	0	0	0
06:15 PM	0	0	0	0	0	0	0	0	0	0	0	0	0	0	0	0	0	0	0	0	0
06:30 PM	0	0	0	0	0	0	0	0	0	0	0	0	0	0	0	0	0	0	0	0	0
06:45 PM	0	0	0	0	0	0	0	0	0	0	0	0	0	0	0	0	0	0	0	0	0
Total	0	0	0	0	0	0	0	0	0	0	0	0	0	0	0	0	0	0	0	0	0
Grand Total	0	0	0	0	0	0	0	0	0	0	0	0	0	0	0	0	0	0	0	0	0
Apprch %	0	0	0	0		0	0	0	0		0	0	0	0		0	0	0	0		
Total %																					

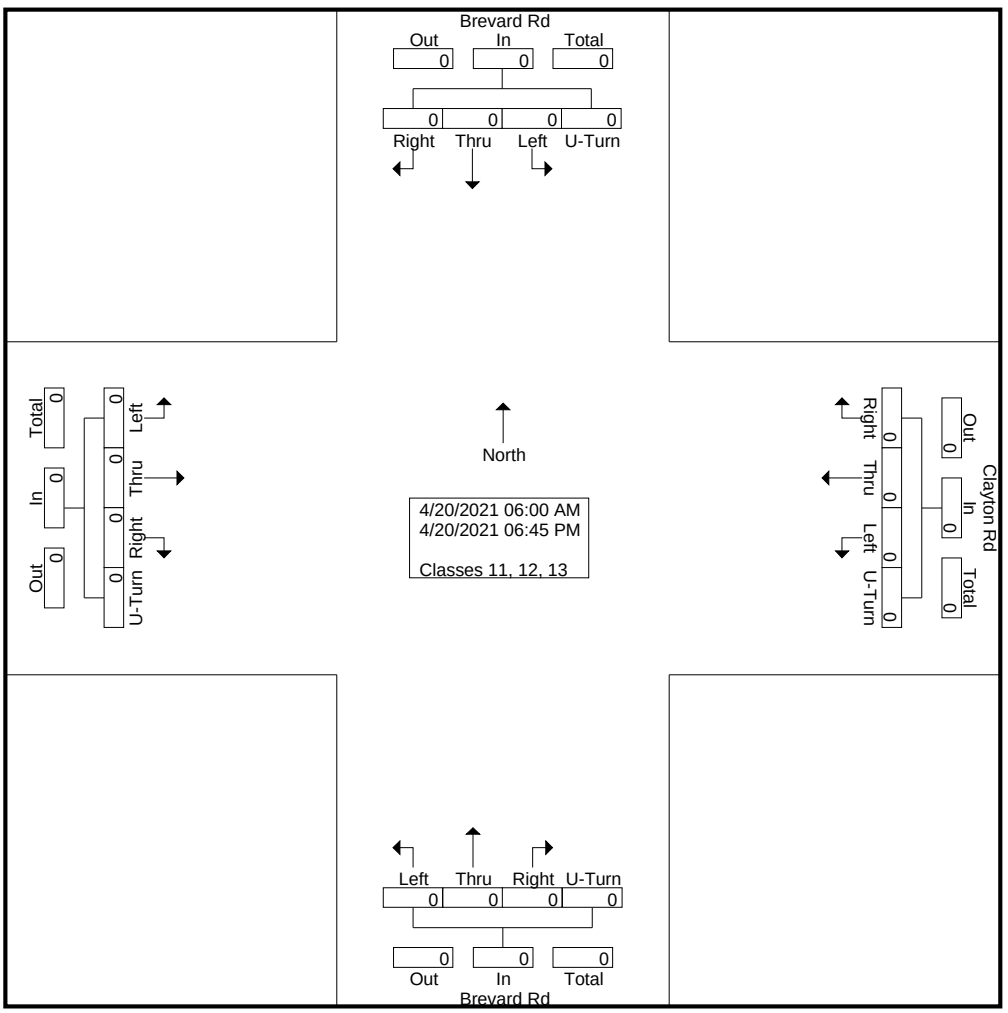

DocuSign Envelope ID: 5C03745C-4B01-4834-A65D-B77F558A4F46

Quality Counts

920 Blairhill Rd, Ste B-106
Charlotte, NC 28217

File Name : 15411711 - Brevard Rd -- Clayton Rd
Site Code : 15411711
Start Date : 4/20/2021
Page No : 3

	Brevard Rd Southbound					Clayton Rd Westbound					Brevard Rd Northbound					Eastbound					
Start Time	Left	Thru	Right	U-Turn	App. Total	Left	Thru	Right	U-Turn	App. Total	Left	Thru	Right	U-Turn	App. Total	Left	Thru	Right	U-Turn	App. Total	Int. Total
Peak Hour Analysis From 06:00 AM to 11:45 AM - Peak 1 of 1																					
Peak Hour for Entire Intersection Begins at 06:00 AM																					
06:00 AM	0	0	0	0	0	0	0	0	0	0	0	0	0	0	0	0	0	0	0	0	0
06:15 AM	0	0	0	0	0	0	0	0	0	0	0	0	0	0	0	0	0	0	0	0	0
06:30 AM	0	0	0	0	0	0	0	0	0	0	0	0	0	0	0	0	0	0	0	0	0
06:45 AM	0	0	0	0	0	0	0	0	0	0	0	0	0	0	0	0	0	0	0	0	0
Total Volume	0	0	0	0	0	0	0	0	0	0	0	0	0	0	0	0	0	0	0	0	0
% App. Total	0	0	0	0		0	0	0	0		0	0	0	0		0	0	0	0		
PHF	.000	.000	.000	.000	.000	.000	.000	.000	.000	.000	.000	.000	.000	.000	.000	.000	.000	.000	.000	.000	.000

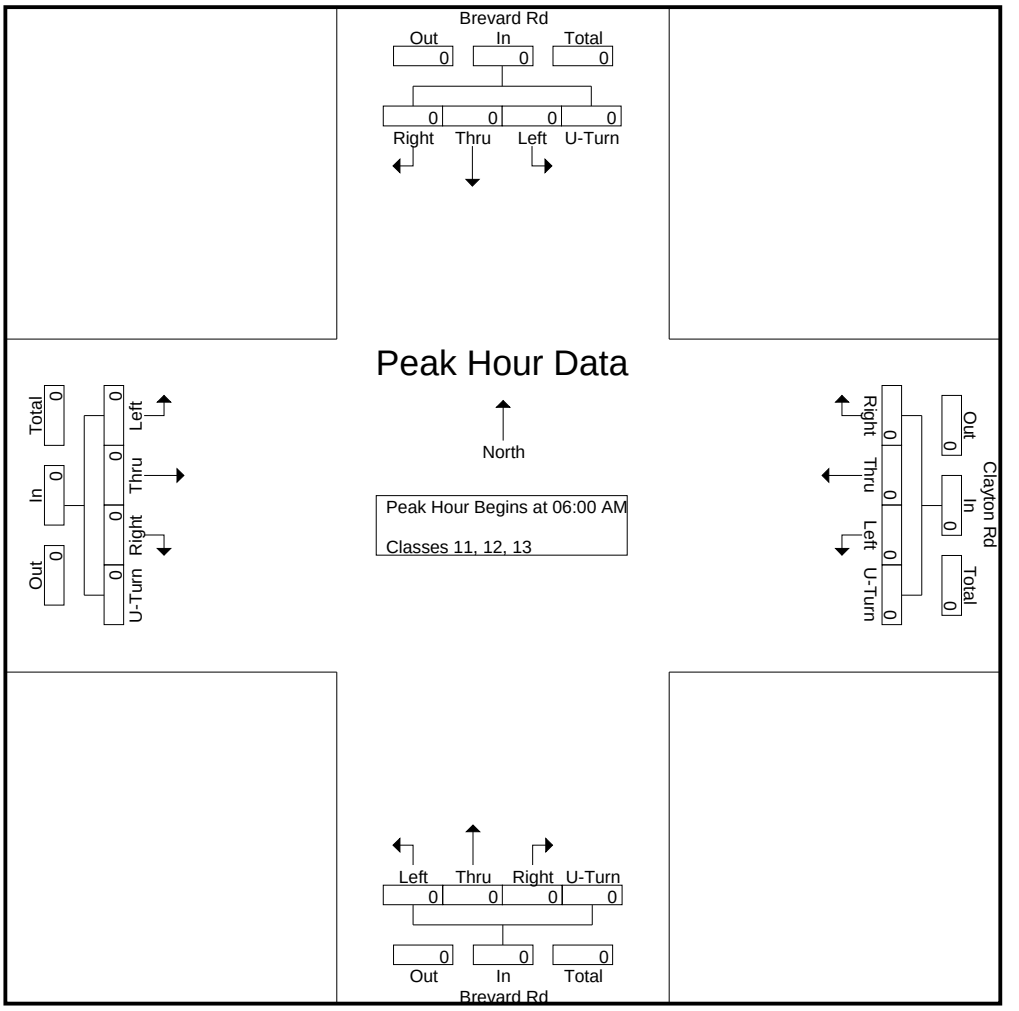

DocuSign Envelope ID: 5C03745C-4B01-4834-A65D-B77F558A4F46

Quality Counts

920 Blairhill Rd, Ste B-106
Charlotte, NC 28217

File Name : 15411711 - Brevard Rd -- Clayton Rd
Site Code : 15411711
Start Date : 4/20/2021
Page No : 4

	Brevard Rd Southbound					Clayton Rd Westbound					Brevard Rd Northbound					Eastbound					
Start Time	Left	Thru	Right	U-Turn	App. Total	Left	Thru	Right	U-Turn	App. Total	Left	Thru	Right	U-Turn	App. Total	Left	Thru	Right	U-Turn	App. Total	Int. Total
Peak Hour Analysis From 12:00 PM to 06:45 PM - Peak 1 of 1																					
Peak Hour for Entire Intersection Begins at 12:00 PM																					
12:00 PM	0	0	0	0	0	0	0	0	0	0	0	0	0	0	0	0	0	0	0	0	0
12:15 PM	0	0	0	0	0	0	0	0	0	0	0	0	0	0	0	0	0	0	0	0	0
12:30 PM	0	0	0	0	0	0	0	0	0	0	0	0	0	0	0	0	0	0	0	0	0
12:45 PM	0	0	0	0	0	0	0	0	0	0	0	0	0	0	0	0	0	0	0	0	0
Total Volume	0	0	0	0	0	0	0	0	0	0	0	0	0	0	0	0	0	0	0	0	0
% App. Total	0	0	0	0		0	0	0	0		0	0	0	0		0	0	0	0		
PHF	.000	.000	.000	.000	.000	.000	.000	.000	.000	.000	.000	.000	.000	.000	.000	.000	.000	.000	.000	.000	.000

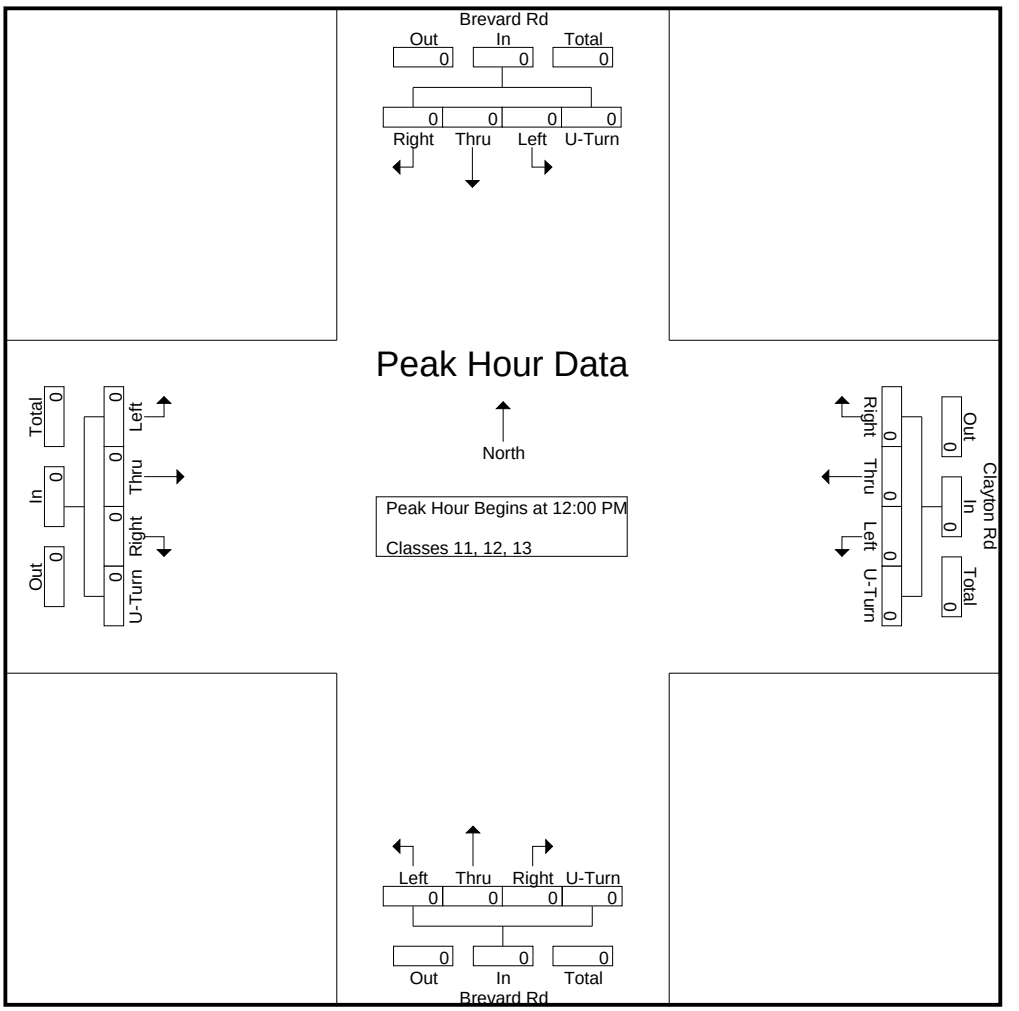

DocuSign Envelope ID: 5C03745C-4B01-4834-A65D-B77F558A4F46

Quality Counts

920 Blairhill Rd, Ste B-106
Charlotte, NC 28217

File Name : 15411711 - Brevard Rd -- Clayton Rd
Site Code : 15411711
Start Date : 4/20/2021
Page No : 1

Groups Printed- Bikes, Peds

	Brevard Rd Southbound					Clayton Rd Westbound					Brevard Rd Northbound					Eastbound					
Start Time	Left	Thru	Right	Peds	App. Total	Left	Thru	Right	Peds	App. Total	Left	Thru	Right	Peds	App. Total	Left	Thru	Right	Peds	App. Total	Int. Total
06:00 AM	0	0	0	0	0	0	0	0	0	0	0	0	0	0	0	0	0	0	0	0	0
06:15 AM	0	0	0	0	0	0	0	0	0	0	0	0	0	0	0	0	0	0	0	0	0
06:30 AM	0	0	0	0	0	0	0	0	0	0	0	0	0	0	0	0	0	0	0	0	0
06:45 AM	0	0	0	0	0	0	0	0	0	0	0	0	0	0	0	0	0	0	0	0	0
Total	0	0	0	0	0	0	0	0	0	0	0	0	0	0	0	0	0	0	0	0	0
07:00 AM	0	0	0	0	0	0	0	0	0	0	0	0	0	0	0	0	0	0	0	0	0
07:15 AM	0	0	0	0	0	0	0	0	0	0	0	0	0	0	0	0	0	0	0	0	0
07:30 AM	0	0	0	0	0	0	0	0	0	0	0	0	0	0	0	0	0	0	0	0	0
07:45 AM	0	0	0	0	0	0	0	0	0	0	0	0	0	0	0	0	0	0	0	0	0
Total	0	0	0	0	0	0	0	0	0	0	0	0	0	0	0	0	0	0	0	0	0
08:00 AM	0	0	0	0	0	0	0	0	0	0	0	0	0	0	0	0	0	0	0	0	0
08:15 AM	0	0	0	0	0	0	0	0	0	0	0	0	0	0	0	0	0	0	0	0	0
08:30 AM	0	0	0	0	0	0	0	0	0	0	0	0	0	0	0	0	0	0	0	0	0
08:45 AM	0	0	0	0	0	0	0	0	0	0	0	0	0	0	0	0	0	0	0	0	0
Total	0	0	0	0	0	0	0	0	0	0	0	0	0	0	0	0	0	0	0	0	0
09:00 AM	0	0	0	0	0	0	0	0	0	0	0	0	0	0	0	0	0	0	0	0	0
09:15 AM	0	0	0	0	0	0	0	0	0	0	0	0	0	0	0	0	0	0	0	0	0
09:30 AM	0	0	0	0	0	0	0	0	0	0	0	0	0	0	0	0	0	0	0	0	0
09:45 AM	0	0	0	0	0	0	0	0	0	0	0	0	0	0	0	0	0	0	0	0	0
Total	0	0	0	0	0	0	0	0	0	0	0	0	0	0	0	0	0	0	0	0	0
10:00 AM	0	0	0	0	0	0	0	0	0	0	0	0	0	0	0	0	0	0	0	0	0
10:15 AM	2	0	0	0	2	0	0	0	0	0	0	0	0	0	0	0	0	0	0	0	2
10:30 AM	0	0	0	0	0	0	0	0	0	0	0	0	0	0	0	0	0	0	0	0	0
10:45 AM	0	0	0	0	0	0	0	0	0	0	0	0	0	0	0	0	0	0	0	0	0
Total	2	0	0	0	2	0	0	0	0	0	0	0	0	0	0	0	0	0	0	0	2
11:00 AM	0	0	0	0	0	0	0	0	0	0	0	0	0	0	0	0	0	0	0	0	0
11:15 AM	0	0	0	0	0	0	0	0	0	0	0	0	0	0	0	0	0	0	0	0	0
11:30 AM	0	0	0	0	0	0	0	0	0	0	0	0	0	0	0	0	0	0	0	0	0
11:45 AM	0	0	0	0	0	0	0	0	0	0	0	0	0	0	0	0	0	0	0	0	0
Total	0	0	0	0	0	0	0	0	0	0	0	0	0	0	0	0	0	0	0	0	0
12:00 PM	0	0	0	0	0	0	0	0	0	0	0	0	0	0	0	0	0	0	0	0	0
12:15 PM	0	0	0	0	0	0	0	0	0	0	0	0	0	0	0	0	0	0	0	0	0
12:30 PM	0	0	0	0	0	0	0	0	0	0	0	0	0	0	0	0	0	0	0	0	0
12:45 PM	0	0	0	0	0	0	0	0	0	0	0	0	0	0	0	0	0	0	0	0	0
Total	0	0	0	0	0	0	0	0	0	0	0	0	0	0	0	0	0	0	0	0	0
01:00 PM	0	0	0	0	0	0	0	0	0	0	0	0	0	0	0	0	0	0	0	0	0
01:15 PM	0	0	0	0	0	0	0	0	0	0	0	0	0	0	0	0	0	0	0	0	0
01:30 PM	0	0	0	0	0	0	0	0	0	0	0	1	0	0	1	0	0	0	0	0	1
01:45 PM	0	0	0	0	0	0	0	0	0	0	0	0	0	0	0	0	0	0	0	0	0
Total	0	0	0	0	0	0	0	0	0	0	0	1	0	0	1	0	0	0	0	0	1
02:00 PM	0	0	0	0	0	0	0	0	0	0	0	0	0	0	0	0	0	0	0	0	0
02:15 PM	0	0	0	0	0	0	0	0	0	0	0	0	0	0	0	0	0	0	0	0	0
02:30 PM	0	0	0	0	0	0	0	0	0	0	0	0	0	0	0	0	0	0	0	0	0
02:45 PM	0	0	0	0	0	0	0	0	0	0	0	0	0	0	0	0	0	0	0	0	0
Total	0	0	0	0	0	0	0	0	0	0	0	0	0	0	0	0	0	0	0	0	0
03:00 PM	0	0	0	0	0	0	0	0	0	0	0	0	0	0	0	0	0	0	0	0	0
03:15 PM	0	0	0	0	0	0	0	0	0	0	0	0	0	0	0	0	0	0	0	0	0
03:30 PM	0	0	0	0	0	0	0	0	0	0	0	0	0	0	0	0	0	0	0	0	0

DocuSign Envelope ID: 5C03745C-4B01-4834-A65D-B77F558A4F46

Quality Counts

920 Blairhill Rd, Ste B-106
Charlotte, NC 28217

File Name : 15411711 - Brevard Rd -- Clayton Rd
Site Code : 15411711
Start Date : 4/20/2021

Groups Printed- Bikes, Peds

	Brevard Rd Southbound					Clayton Rd Westbound					Brevard Rd Northbound					Eastbound					
Start Time	Left	Thru	Right	Peds	App. Total	Left	Thru	Right	Peds	App. Total	Left	Thru	Right	Peds	App. Total	Left	Thru	Right	Peds	App. Total	Int. Total
03:45 PM	0	0	0	0	0	0	0	0	0	0	0	0	0	0	0	0	0	0	0	0	0
Total	0	0	0	0	0	0	0	0	0	0	0	0	0	0	0	0	0	0	0	0	0
04:00 PM	0	0	0	0	0	0	0	0	0	0	0	0	0	0	0	0	0	0	0	0	0
04:15 PM	0	0	0	0	0	0	0	0	0	0	0	1	0	0	1	0	0	0	0	0	1
04:30 PM	0	0	0	0	0	0	0	0	0	0	0	0	0	0	0	0	0	0	0	0	0
04:45 PM	0	0	0	0	0	0	0	0	0	0	0	0	0	0	0	0	0	0	0	0	0
Total	0	0	0	0	0	0	0	0	0	0	0	1	0	0	1	0	0	0	0	0	1
05:00 PM	0	0	0	0	0	0	0	0	0	0	0	0	0	0	0	0	0	0	0	0	0
05:15 PM	0	0	0	0	0	0	0	0	0	0	0	0	0	0	0	0	0	0	0	0	0
05:30 PM	0	0	0	0	0	0	0	0	0	0	0	0	0	0	0	0	0	0	0	0	0
05:45 PM	0	0	0	0	0	0	0	0	0	0	0	0	0	0	0	0	0	0	0	0	0
Total	0	0	0	0	0	0	0	0	0	0	0	0	0	0	0	0	0	0	0	0	0
06:00 PM	0	0	0	0	0	0	0	0	0	0	0	0	0	0	0	0	0	0	0	0	0
06:15 PM	0	0	0	0	0	0	0	0	0	0	0	0	0	0	0	0	0	0	0	0	0
06:30 PM	0	0	0	0	0	0	0	0	0	0	0	0	0	0	0	0	0	0	0	0	0
06:45 PM	0	0	0	0	0	0	0	0	0	0	0	0	0	0	0	0	0	0	0	0	0
Total	0	0	0	0	0	0	0	0	0	0	0	0	0	0	0	0	0	0	0	0	0
Grand Total	2	0	0	0	2	0	0	0	0	0	0	2	0	0	2	0	0	0	0	0	4
Apprch %	100	0	0	0		0	0	0	0		0	100	0	0		0	0	0	0		
Total %	50	0	0	0	50	0	0	0	0	0	0	50	0	0	50	0	0	0	0	0	

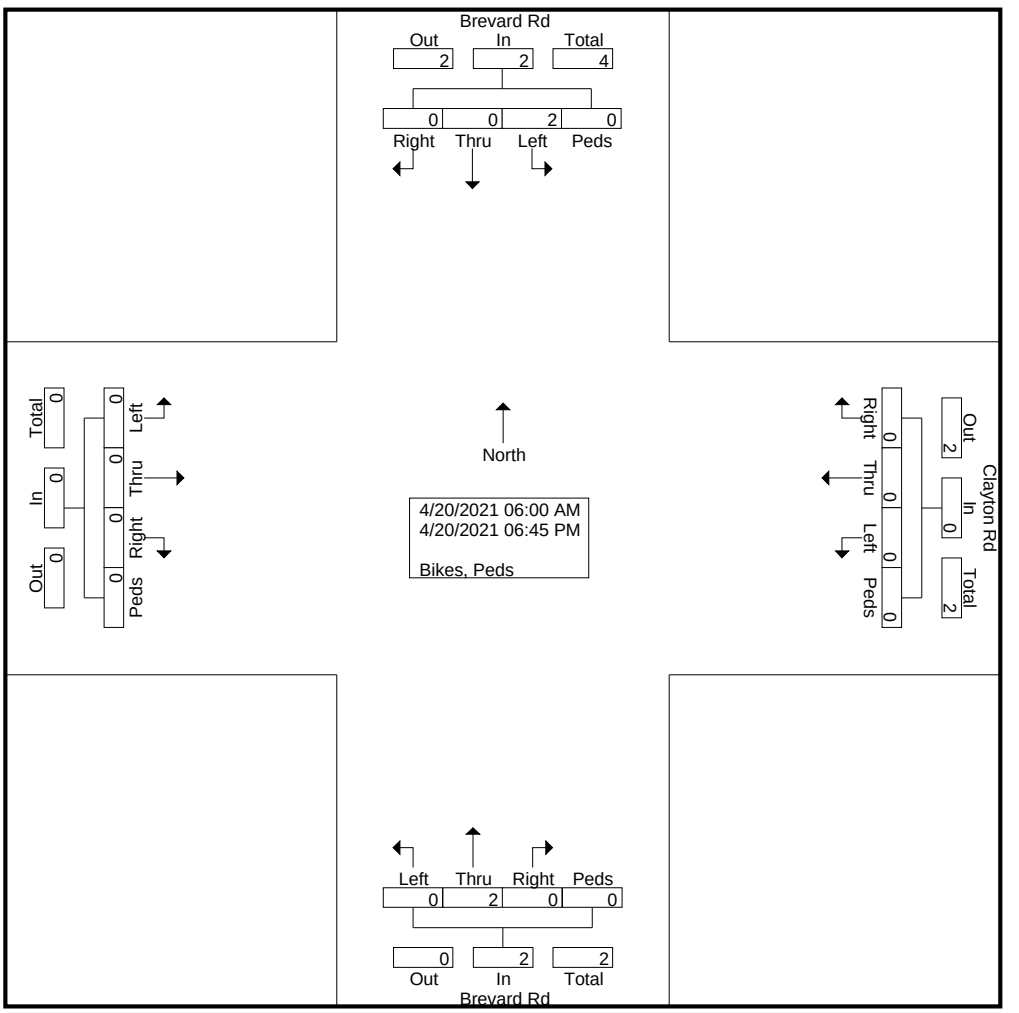

DocuSign Envelope ID: 5C03745C-4B01-4834-A65D-B77F558A4F46

Quality Counts

920 Blairhill Rd, Ste B-106
Charlotte, NC 28217

File Name : 15411711 - Brevard Rd -- Clayton Rd
Site Code : 15411711
Start Date : 4/20/2021
Page No : 3

	Brevard Rd Southbound					Clayton Rd Westbound					Brevard Rd Northbound					Eastbound					
Start Time	Left	Thru	Right	Peds	App. Total	Left	Thru	Right	Peds	App. Total	Left	Thru	Right	Peds	App. Total	Left	Thru	Right	Peds	App. Total	Int. Total
Peak Hour Analysis From 06:00 AM to 11:45 AM - Peak 1 of 1																					
Peak Hour for Entire Intersection Begins at 09:30 AM																					
09:30 AM	0	0	0	0	0	0	0	0	0	0	0	0	0	0	0	0	0	0	0	0	0
09:45 AM	0	0	0	0	0	0	0	0	0	0	0	0	0	0	0	0	0	0	0	0	0
10:00 AM	0	0	0	0	0	0	0	0	0	0	0	0	0	0	0	0	0	0	0	0	0
10:15 AM	**2**	0	0	0	**2**	0	0	0	0	0	0	0	0	0	0	0	0	0	0	0	**2**
Total Volume	2	0	0	0	2	0	0	0	0	0	0	0	0	0	0	0	0	0	0	0	2
% App. Total	100	0	0	0		0	0	0	0		0	0	0	0		0	0	0	0		
PHF	.250	.000	.000	.000	.250	.000	.000	.000	.000	.000	.000	.000	.000	.000	.000	.000	.000	.000	.000	.000	.250

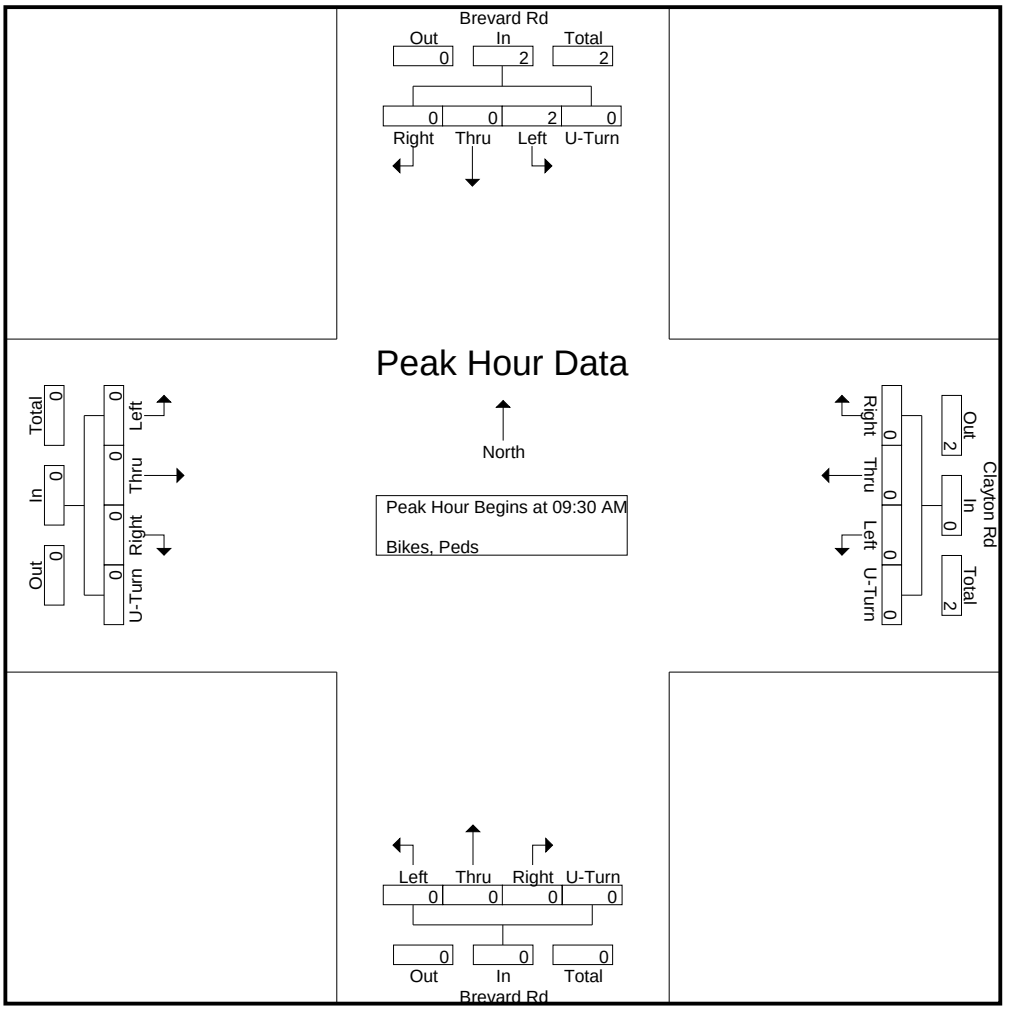

DocuSign Envelope ID: 5C03745C-4B01-4834-A65D-B77F558A4F46

Quality Counts

920 Blairhill Rd, Ste B-106
Charlotte, NC 28217

File Name : 15411711 - Brevard Rd -- Clayton Rd
Site Code : 15411711
Start Date : 4/20/2021
Page No : 4

	Brevard Rd Southbound					Clayton Rd Westbound					Brevard Rd Northbound					Eastbound					
Start Time	Left	Thru	Right	Peds	App. Total	Left	Thru	Right	Peds	App. Total	Left	Thru	Right	Peds	App. Total	Left	Thru	Right	Peds	App. Total	Int. Total
Peak Hour Analysis From 12:00 PM to 06:45 PM - Peak 1 of 1																					
Peak Hour for Entire Intersection Begins at 12:45 PM																					
12:45 PM	0	0	0	0	0	0	0	0	0	0	0	0	0	0	0	0	0	0	0	0	0
01:00 PM	0	0	0	0	0	0	0	0	0	0	0	0	0	0	0	0	0	0	0	0	0
01:15 PM	0	0	0	0	0	0	0	0	0	0	0	0	0	0	0	0	0	0	0	0	0
01:30 PM	0	0	0	0	0	0	0	0	0	0	0	**1**	0	0	**1**	0	0	0	0	0	**1**
Total Volume	0	0	0	0	0	0	0	0	0	0	0	1	0	0	1	0	0	0	0	0	1
% App. Total	0	0	0	0		0	0	0	0		0	100	0	0		0	0	0	0		
PHF	.000	.000	.000	.000	.000	.000	.000	.000	.000	.000	.000	.250	.000	.000	.250	.000	.000	.000	.000	.000	.250

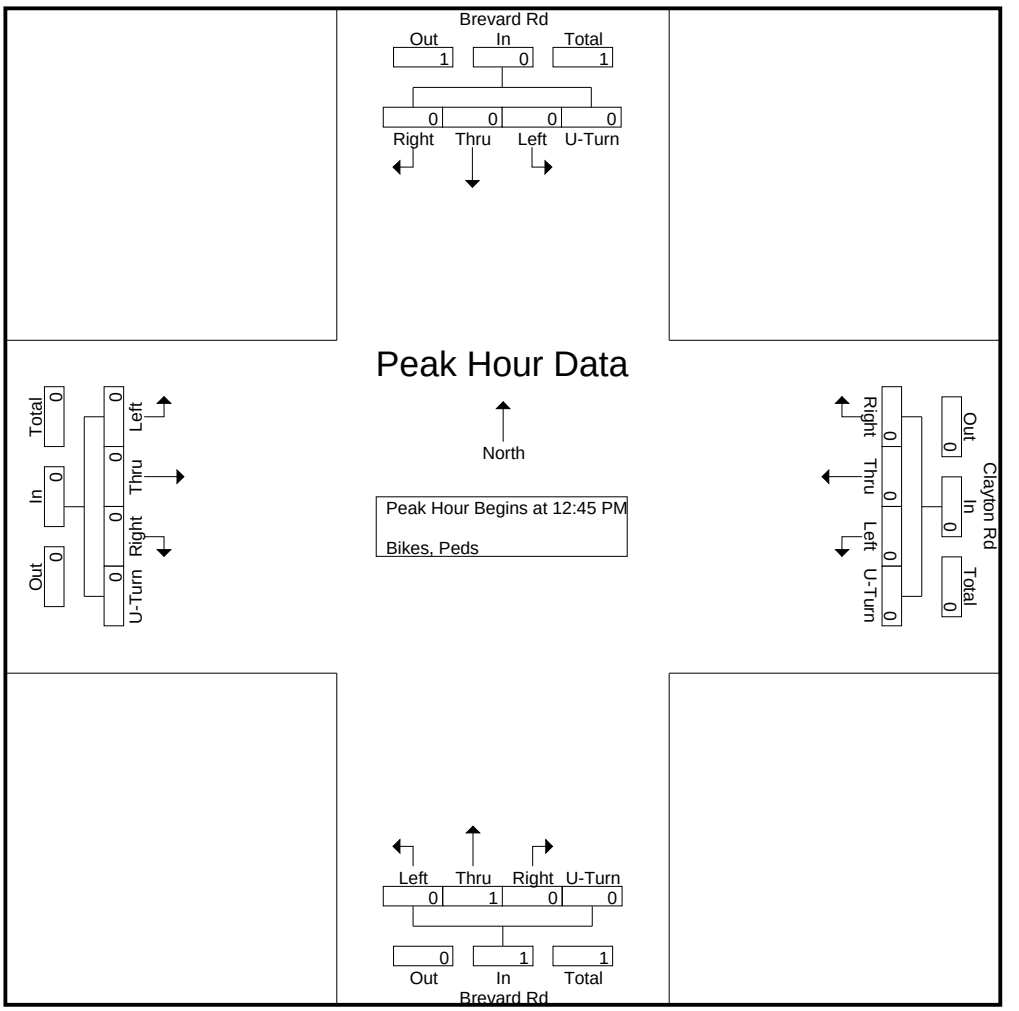

DocuSign Envelope ID: 5C03745C-4B01-4834-A65D-B77F558A4F46

QUALITY COUNTS LLC
920 Blairhill Rd, Suite 106, Charlotte, NC 28217
704.215.4616

Count Number: 15411712
County: Buncombe
City: Arden
Division: 13

Location: Brevard Rd & Industrial Dr/Borg Warner Dr
General Location Type: Intersection
Count Type: Turning Movement (Classification)
Count Start Date: 4/20/2021
Time: 6:00 AM – 7:00 PM
Volume: 11,105

Maximum Temperature: 69° F
Minimum Temperature: 40° F
Precipitation: 0.00 in
Snowfall: 0.0 in
Average Sky Cover: 0.2
Weather Conditions: Clear

1. **School in Session:** Yes
2. **Pedestrians Counted**: Yes
3. **Disabled Pedestrians Present**: No
   Description and Approaches Used: N/A
4. **Counted By**: Chrissy Lewis
5. **Data Processor**: Jon B
6. **Signal Inventory**: N/A
7. **Data Collection Method**: Video/Count Board
8. **Equipment Operating Properly**: Yes
9. **Area Lighting Present**: Yes
10. **Nearest Roadway Stop Sign < 300 ft:** No
    If yes, list approaches: N/A
11. **Nearest Traffic Signal < 300 ft:** No
    If yes, list approaches: N/A
12. **At-Grade Railroad Crossing Present (<200 ft):** No
    If yes, list approaches & distance: N/A
13. **Other:**

↑ North

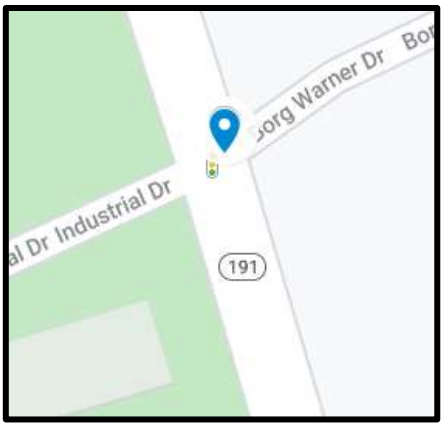

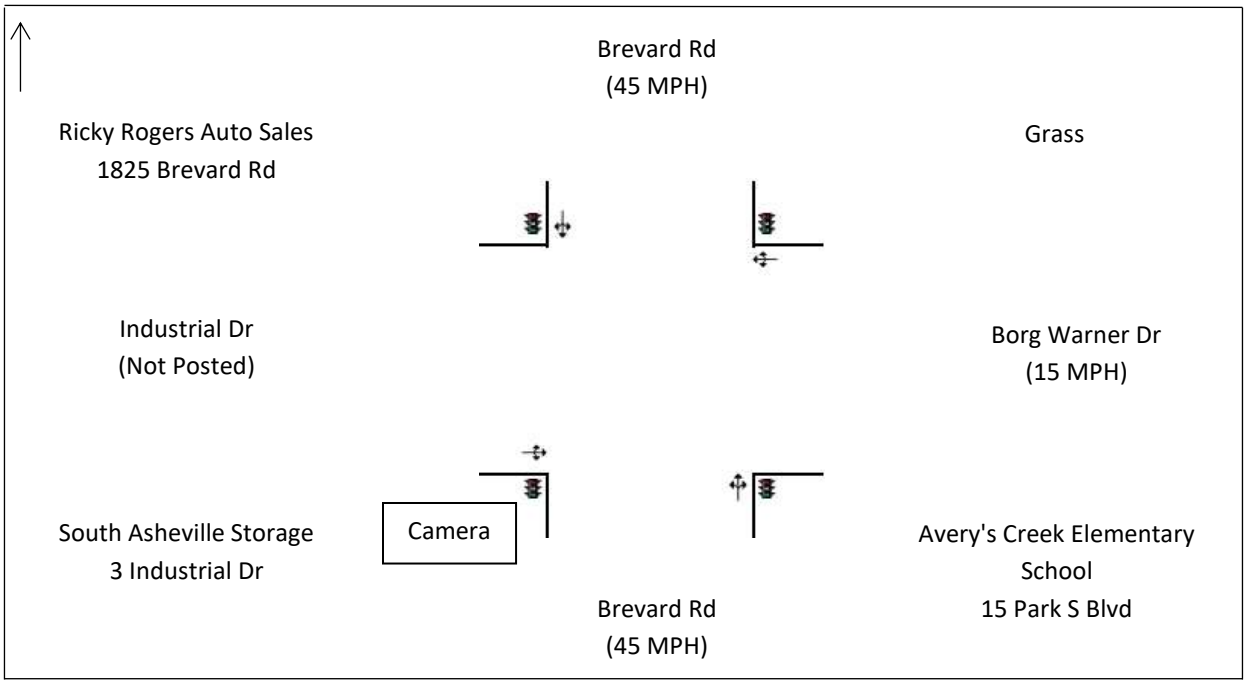

DocuSign Envelope ID: 5C03745C-4B01-4834-A65D-B77F558A4F46

Quality Counts

920 Blairhill Rd, Ste B-106
Charlotte, NC 28217

File Name : 15411712 - Brevard Rd -- Industrial Dr_Borg Warner Dr
Site Code : 15411712
Start Date : 4/20/2021
Page No : 1

Groups Printed- Classes 1, 2, 3 - Classes 4, 5, 6, 7 - Classes 8, 9, 10 - Classes 11, 12, 13

	Brevard Rd Southbound					Borg Warner Dr Westbound					Brevard Rd Northbound					Industrial Dr Eastbound					
Start Time	Left	Thru	Right	U-Turn	App. Total	Left	Thru	Right	U-Turn	App. Total	Left	Thru	Right	U-Turn	App. Total	Left	Thru	Right	U-Turn	App. Total	Int. Total
06:00 AM	10	40	0	0	50	1	0	1	0	2	1	15	2	0	18	0	0	0	0	0	70
06:15 AM	19	33	2	0	54	1	0	0	0	1	0	37	12	0	49	0	0	0	0	0	104
06:30 AM	23	63	1	0	87	3	0	0	0	3	0	58	21	0	79	0	0	0	0	0	169
06:45 AM	28	76	4	0	108	0	0	3	0	3	3	57	25	0	85	0	0	0	0	0	196
Total	80	212	7	0	299	5	0	4	0	9	4	167	60	0	231	0	0	0	0	0	539
07:00 AM	5	94	1	0	100	9	0	23	0	32	3	76	7	0	86	0	0	0	0	0	218
07:15 AM	3	104	0	0	107	0	0	6	0	6	1	110	11	0	122	0	0	0	0	0	235
07:30 AM	10	111	1	0	122	3	0	2	0	5	3	92	8	0	103	0	0	1	0	1	231
07:45 AM	6	98	1	0	105	0	0	1	0	1	1	121	5	0	127	1	0	0	0	1	234
Total	24	407	3	0	434	12	0	32	0	44	8	399	31	0	438	1	0	1	0	2	918
08:00 AM	2	96	2	0	100	4	0	2	0	6	2	130	6	0	138	0	0	0	0	0	244
08:15 AM	3	95	0	0	98	2	0	1	0	3	0	100	7	0	107	0	0	3	0	3	211
08:30 AM	1	85	0	0	86	3	0	1	0	4	3	106	5	0	114	0	1	0	0	1	205
08:45 AM	3	80	1	0	84	6	0	1	0	7	0	85	9	0	94	1	0	0	0	1	186
Total	9	356	3	0	368	15	0	5	0	20	5	421	27	0	453	1	1	3	0	5	846
09:00 AM	1	85	2	0	88	5	0	1	0	6	0	69	14	0	83	0	0	0	0	0	177
09:15 AM	1	72	0	0	73	1	0	1	0	2	2	67	4	0	73	3	0	1	0	4	152
09:30 AM	0	72	1	0	73	2	0	0	0	2	1	91	6	0	98	0	0	1	0	1	174
09:45 AM	1	63	2	0	66	2	0	0	0	2	0	81	2	0	83	0	0	1	0	1	152
Total	3	292	5	0	300	10	0	2	0	12	3	308	26	0	337	3	0	3	0	6	655
10:00 AM	3	62	0	0	65	3	0	0	0	3	0	95	3	0	98	1	0	0	0	1	167
10:15 AM	2	75	1	0	78	2	0	0	0	2	0	64	0	0	64	1	0	0	0	1	145
10:30 AM	4	74	0	0	78	2	0	2	0	4	0	92	0	0	92	1	0	0	0	1	175
10:45 AM	1	75	0	0	76	4	0	4	0	8	1	79	5	0	85	0	0	0	0	0	169
Total	10	286	1	0	297	11	0	6	0	17	1	330	8	0	339	3	0	0	0	3	656
11:00 AM	3	77	2	0	82	14	0	6	0	20	2	95	2	0	99	3	0	3	0	6	207
11:15 AM	2	70	1	0	73	5	0	6	0	11	0	74	5	0	79	0	0	1	0	1	164
11:30 AM	3	70	1	0	74	7	1	6	0	14	3	71	1	0	75	1	1	2	0	4	167
11:45 AM	4	79	1	0	84	10	0	7	0	17	4	100	5	0	109	0	0	3	0	3	213
Total	12	296	5	0	313	36	1	25	0	62	9	340	13	0	362	4	1	9	0	14	751
12:00 PM	2	74	0	0	76	10	0	7	0	17	4	81	13	0	98	0	0	2	0	2	193
12:15 PM	3	75	1	0	79	5	0	2	0	7	0	92	7	0	99	1	0	5	0	6	191
12:30 PM	7	93	1	0	101	4	0	3	0	7	2	112	10	0	124	2	0	0	0	2	234
12:45 PM	5	86	0	0	91	1	0	3	0	4	0	98	12	0	110	0	0	2	0	2	207
Total	17	328	2	0	347	20	0	15	0	35	6	383	42	0	431	3	0	9	0	12	825
01:00 PM	3	81	2	0	86	6	0	7	0	13	1	87	9	0	97	1	1	0	0	2	198
01:15 PM	1	86	1	0	88	1	0	0	0	1	1	116	5	0	122	1	0	1	0	2	213
01:30 PM	1	81	2	0	84	3	0	1	0	4	0	102	2	0	104	1	0	2	0	3	195
01:45 PM	4	86	2	0	92	4	0	2	0	6	0	96	3	0	99	0	0	2	0	2	199
Total	9	334	7	0	350	14	0	10	0	24	2	401	19	0	422	3	1	5	0	9	805
02:00 PM	8	93	3	0	104	4	0	12	0	16	1	96	5	0	102	1	0	0	0	1	223
02:15 PM	11	93	0	0	104	6	0	5	0	11	0	76	6	0	82	1	0	0	0	1	198
02:30 PM	15	111	0	0	126	2	0	4	0	6	2	153	6	0	161	1	0	5	0	6	299
02:45 PM	17	93	2	0	112	4	1	6	0	11	0	155	17	0	172	1	0	1	0	2	297
Total	51	390	5	0	446	16	1	27	0	44	3	480	34	0	517	4	0	6	0	10	1017
03:00 PM	2	84	2	0	88	35	0	67	0	102	2	151	2	0	155	1	0	3	0	4	349
03:15 PM	2	97	0	0	99	10	0	10	0	20	2	135	1	0	138	0	0	3	0	3	260
03:30 PM	2	97	0	0	99	9	0	15	0	24	0	117	3	0	120	6	0	3	0	9	252

DocuSign Envelope ID: 5C03745C-4B01-4834-A65D-B77F558A4F46

Quality Counts

920 Blairhill Rd, Ste B-106
Charlotte, NC 28217

File Name : 15411712 - Brevard Rd -- Industrial Dr_Borg Warner Dr
Site Code : 15411712
Start Date : 4/20/2021
Page No : 2

Groups Printed- Classes 1, 2, 3 - Classes 4, 5, 6, 7 - Classes 8, 9, 10 - Classes 11, 12, 13

	Brevard Rd Southbound					Borg Warner Dr Westbound					Brevard Rd Northbound					Industrial Dr Eastbound					
Start Time	Left	Thru	Right	U-Turn	App. Total	Left	Thru	Right	U-Turn	App. Total	Left	Thru	Right	U-Turn	App. Total	Left	Thru	Right	U-Turn	App. Total	Int. Total
03:45 PM	1	92	0	0	93	5	0	8	0	13	5	150	2	0	157	3	0	5	0	8	271
Total	7	370	2	0	379	59	0	100	0	159	9	553	8	0	570	10	0	14	0	24	1132
04:00 PM	0	112	0	0	112	7	0	11	0	18	0	125	2	0	127	1	0	0	0	1	258
04:15 PM	0	118	0	1	119	5	0	5	0	10	0	156	1	0	157	1	0	4	0	5	291
04:30 PM	2	126	0	0	128	10	0	6	0	16	1	157	3	0	161	0	0	1	0	1	306
04:45 PM	0	97	0	0	97	5	0	11	0	16	0	144	1	0	145	0	0	1	0	1	259
Total	2	453	0	1	456	27	0	33	0	60	1	582	7	0	590	2	0	6	0	8	1114
05:00 PM	1	91	0	0	92	9	0	7	0	16	1	162	1	0	164	0	0	1	0	1	273
05:15 PM	1	114	0	0	115	9	0	10	0	19	1	168	1	0	170	1	0	0	0	1	305
05:30 PM	0	110	1	0	111	4	0	7	0	11	0	168	1	0	169	1	0	0	0	1	292
05:45 PM	2	117	0	0	119	2	0	0	0	2	0	107	1	0	108	1	0	0	0	1	230
Total	4	432	1	0	437	24	0	24	0	48	2	605	4	0	611	3	0	1	0	4	1100
06:00 PM	1	101	0	0	102	4	0	1	0	5	0	116	2	0	118	0	0	1	0	1	226
06:15 PM	0	78	0	0	78	2	2	1	0	5	0	100	0	0	100	0	0	0	0	0	183
06:30 PM	0	73	0	0	73	3	0	1	0	4	1	71	1	0	73	0	1	0	0	1	151
06:45 PM	0	67	0	0	67	15	2	11	0	28	0	89	1	0	90	0	1	1	0	2	187
Total	1	319	0	0	320	24	4	14	0	42	1	376	4	0	381	0	2	2	0	4	747
Grand Total	229	4475	41	1	4746	273	6	297	0	576	54	5345	283	0	5682	37	5	59	0	101	11105
Apprch %	4.8	94.3	0.9	0		47.4	1	51.6	0		1	94.1	5	0		36.6	5	58.4	0		
Total %	2.1	40.3	0.4	0	42.7	2.5	0.1	2.7	0	5.2	0.5	48.1	2.5	0	51.2	0.3	0	0.5	0	0.9	
Classes 1, 2, 3	207	4204	36	1	4448	246	5	275	0	526	44	4945	258	0	5247	33	5	48	0	86	10307
% Classes 1, 2, 3	90.4	93.9	87.8	100	93.7	90.1	83.3	92.6	0	91.3	81.5	92.5	91.2	0	92.3	89.2	100	81.4	0	85.1	92.8
Classes 4, 5, 6, 7	11	226	4	0	241	8	1	12	0	21	6	337	8	0	351	2	0	8	0	10	623
% Classes 4, 5, 6, 7	4.8	5.1	9.8	0	5.1	2.9	16.7	4	0	3.6	11.1	6.3	2.8	0	6.2	5.4	0	13.6	0	9.9	5.6
Classes 8, 9, 10	11	45	1	0	57	19	0	10	0	29	4	63	17	0	84	2	0	3	0	5	175
% Classes 8, 9, 10	4.8	1	2.4	0	1.2	7	0	3.4	0	5	7.4	1.2	6	0	1.5	5.4	0	5.1	0	5	1.6
Classes 11, 12, 13	0	0	0	0	0	0	0	0	0	0	0	0	0	0	0	0	0	0	0	0	0
% Classes 11, 12, 13	0	0	0	0	0	0	0	0	0	0	0	0	0	0	0	0	0	0	0	0	0

DocuSign Envelope ID: 5C03745C-4B01-4834-A65D-B77F558A4F46

Quality Counts

920 Blairhill Rd, Ste B-106
Charlotte, NC 28217

File Name : 15411712 - Brevard Rd -- Industrial Dr_Borg Warner Dr
Site Code : 15411712
Start Date : 4/20/2021

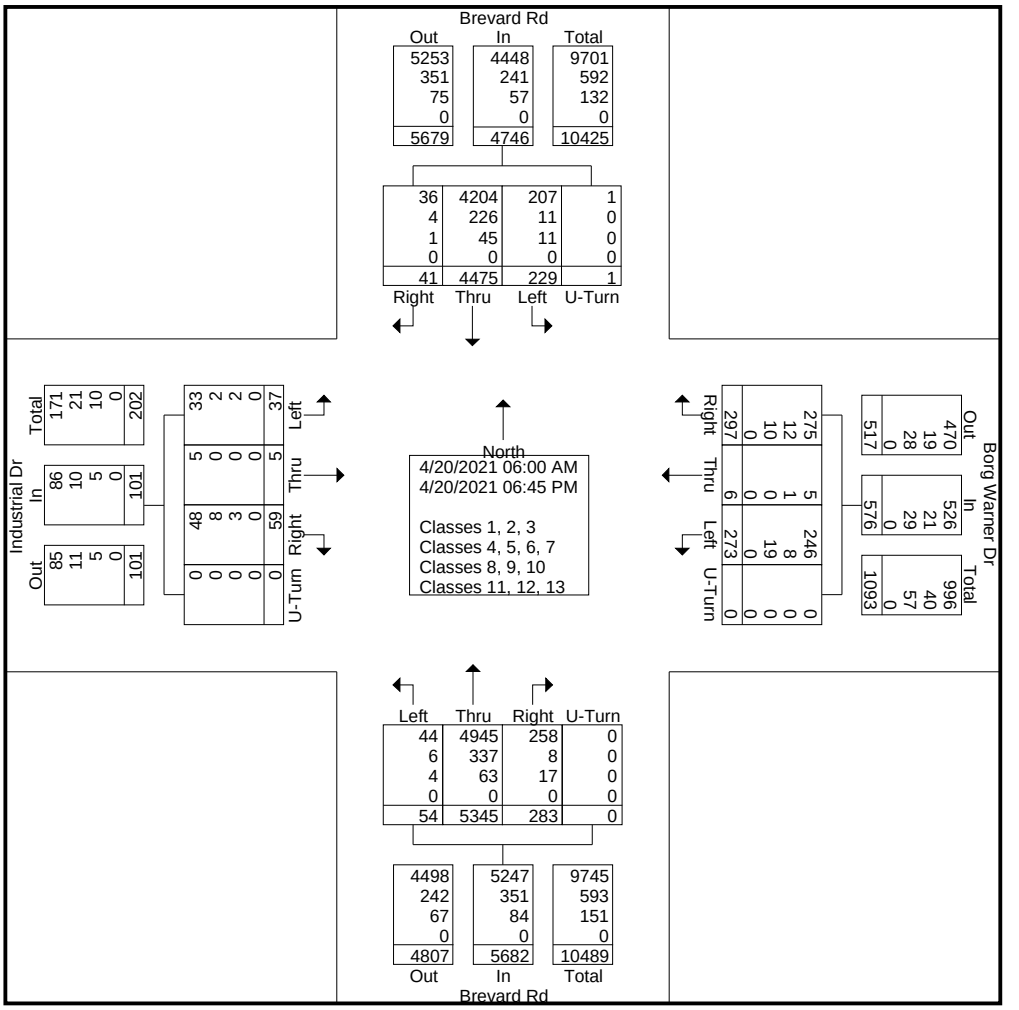

DocuSign Envelope ID: 5C03745C-4B01-4834-A65D-B77F558A4F46

Quality Counts

920 Blairhill Rd, Ste B-106
Charlotte, NC 28217

File Name : 15411712 - Brevard Rd -- Industrial Dr_Borg Warner Dr
Site Code : 15411712
Start Date : 4/20/2021

	Brevard Rd Southbound					Borg Warner Dr Westbound					Brevard Rd Northbound					Industrial Dr Eastbound					
Start Time	Left	Thru	Right	U-Turn	App. Total	Left	Thru	Right	U-Turn	App. Total	Left	Thru	Right	U-Turn	App. Total	Left	Thru	Right	U-Turn	App. Total	Int. Total
Peak Hour Analysis From 06:00 AM to 11:45 AM - Peak 1 of 1																					
Peak Hour for Entire Intersection Begins at 07:15 AM																					
07:15 AM	3	104	0	0	107	0	0	**6**	0	**6**	1	110	**11**	0	122	0	0	0	0	0	235
07:30 AM	**10**	**111**	1	0	**122**	3	0	2	0	5	**3**	92	8	0	103	0	0	**1**	0	**1**	231
07:45 AM	6	98	1	0	105	0	0	1	0	1	1	121	5	0	127	**1**	0	0	0	1	234
08:00 AM	2	96	**2**	0	100	**4**	0	2	0	6	2	**130**	6	0	**138**	0	0	0	0	0	**244**
Total Volume	21	409	4	0	434	7	0	11	0	18	7	453	30	0	490	1	0	1	0	2	944
% App. Total	4.8	94.2	0.9	0		38.9	0	61.1	0		1.4	92.4	6.1	0		50	0	50	0		
PHF	.525	.921	.500	.000	.889	.438	.000	.458	.000	.750	.583	.871	.682	.000	.888	.250	.000	.250	.000	.500	.967

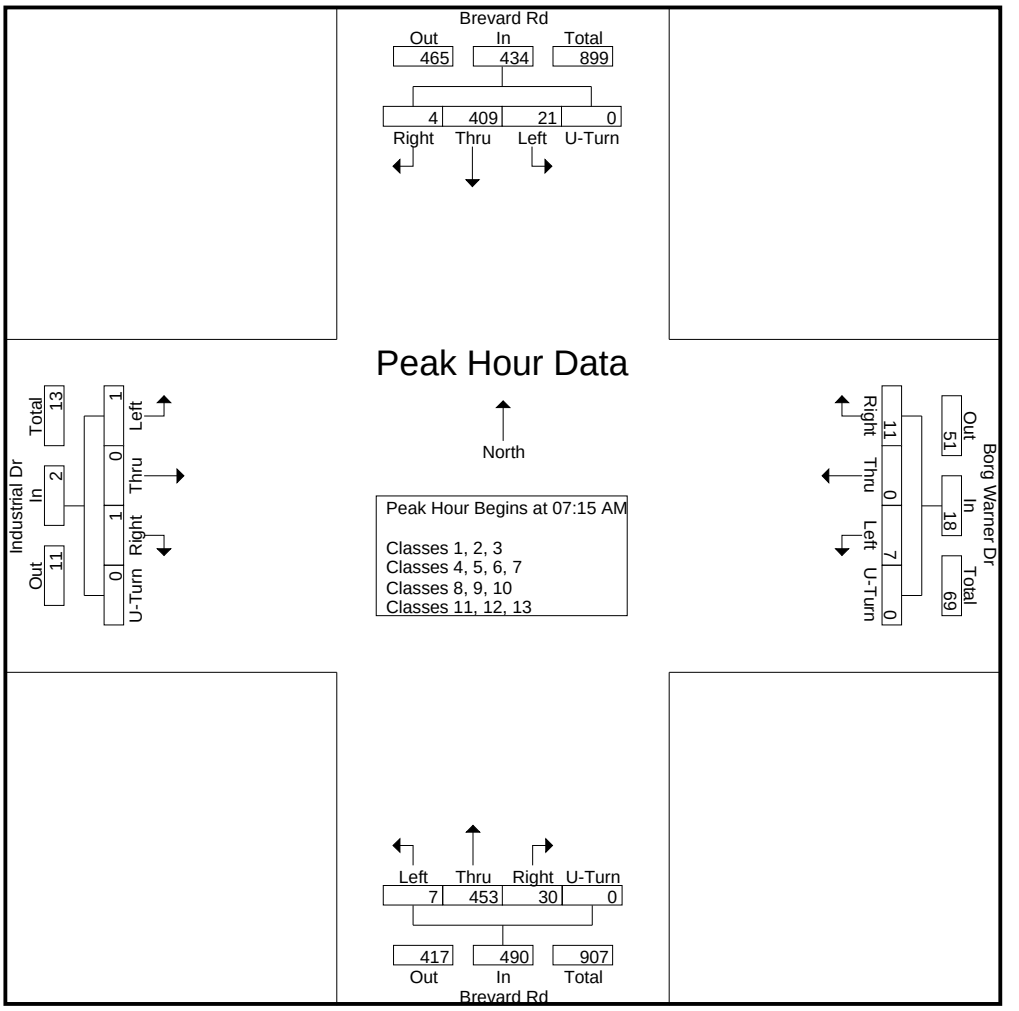

DocuSign Envelope ID: 5C03745C-4B01-4834-A65D-B77F558A4F46

Quality Counts

920 Blairhill Rd, Ste B-106
Charlotte, NC 28217

File Name : 15411712 - Brevard Rd -- Industrial Dr_Borg Warner Dr
Site Code : 15411712
Start Date : 4/20/2021

	Brevard Rd Southbound					Borg Warner Dr Westbound					Brevard Rd Northbound					Industrial Dr Eastbound					
Start Time	Left	Thru	Right	U-Turn	App. Total	Left	Thru	Right	U-Turn	App. Total	Left	Thru	Right	U-Turn	App. Total	Left	Thru	Right	U-Turn	App. Total	Int. Total
Peak Hour Analysis From 12:00 PM to 06:45 PM - Peak 1 of 1																					
Peak Hour for Entire Intersection Begins at 02:30 PM																					
02:30 PM	15	**111**	0	0	**126**	2	0	4	0	6	**2**	153	6	0	161	**1**	0	**5**	0	**6**	299
02:45 PM	**17**	93	**2**	0	112	4	**1**	6	0	11	0	**155**	**17**	0	**172**	1	0	1	0	2	297
03:00 PM	2	84	2	0	88	**35**	0	**67**	0	**102**	2	151	2	0	155	1	0	3	0	4	**349**
03:15 PM	2	97	0	0	99	10	0	10	0	20	2	135	1	0	138	0	0	3	0	3	260
Total Volume	36	385	4	0	425	51	1	87	0	139	6	594	26	0	626	3	0	12	0	15	1205
% App. Total	8.5	90.6	0.9	0		36.7	0.7	62.6	0		1	94.9	4.2	0		20	0	80	0		
PHF	.529	.867	.500	.000	.843	.364	.250	.325	.000	.341	.750	.958	.382	.000	.910	.750	.000	.600	.000	.625	.863

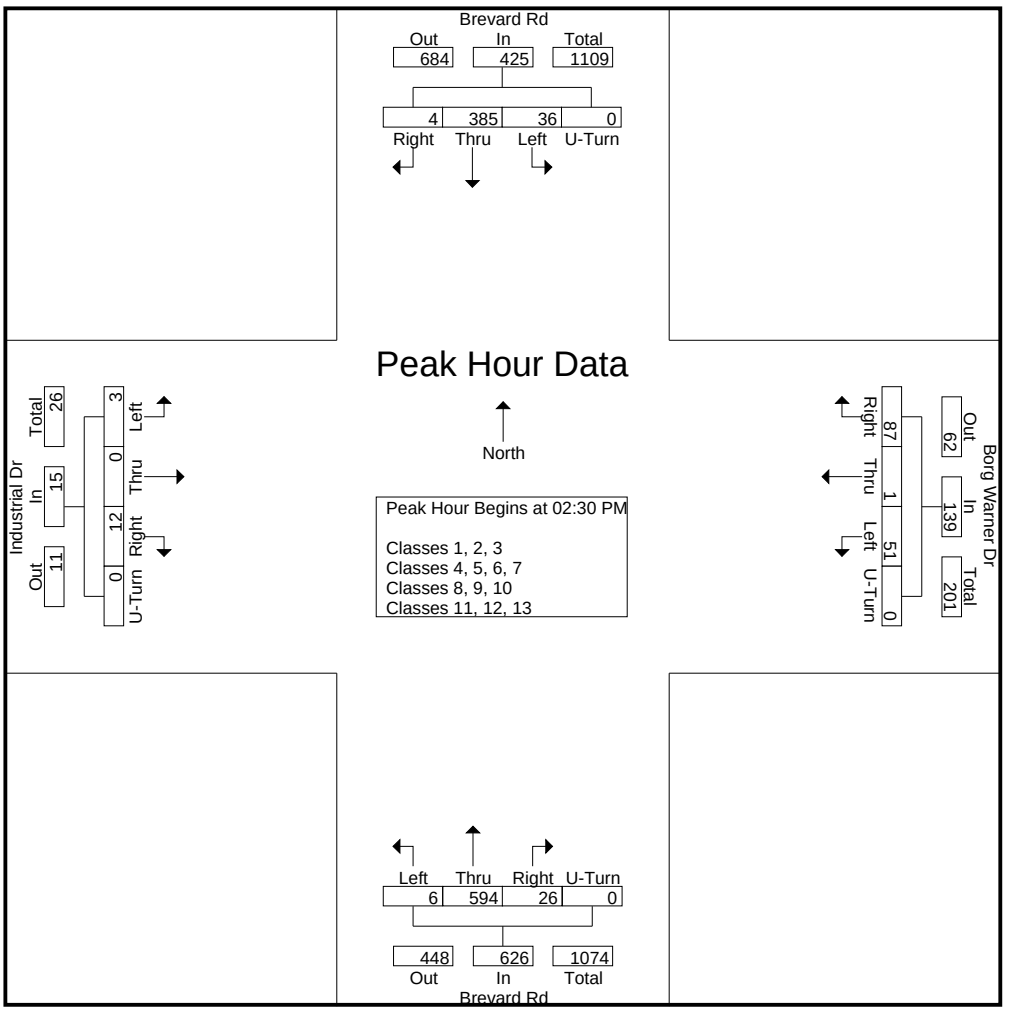

DocuSign Envelope ID: 5C03745C-4B01-4834-A65D-B77F558A4F46

Quality Counts

920 Blairhill Rd, Ste B-106
Charlotte, NC 28217

File Name : 15411712 - Brevard Rd -- Industrial Dr_Borg Warner Dr
Site Code : 15411712
Start Date : 4/20/2021
Page No : 1

Groups Printed- Classes 1, 2, 3

	Brevard Rd Southbound					Borg Warner Dr Westbound					Brevard Rd Northbound					Industrial Dr Eastbound					
Start Time	Left	Thru	Right	U-Turn	App. Total	Left	Thru	Right	U-Turn	App. Total	Left	Thru	Right	U-Turn	App. Total	Left	Thru	Right	U-Turn	App. Total	Int. Total
06:00 AM	10	35	0	0	45	1	0	1	0	2	1	14	2	0	17	0	0	0	0	0	64
06:15 AM	19	31	2	0	52	1	0	0	0	1	0	36	12	0	48	0	0	0	0	0	101
06:30 AM	23	59	1	0	83	3	0	0	0	3	0	57	19	0	76	0	0	0	0	0	162
06:45 AM	28	72	4	0	104	0	0	2	0	2	3	53	25	0	81	0	0	0	0	0	187
Total	80	197	7	0	284	5	0	3	0	8	4	160	58	0	222	0	0	0	0	0	514
07:00 AM	5	89	1	0	95	9	0	23	0	32	2	74	7	0	83	0	0	0	0	0	210
07:15 AM	3	100	0	0	103	0	0	6	0	6	1	102	10	0	113	0	0	0	0	0	222
07:30 AM	10	100	1	0	111	1	0	2	0	3	3	89	8	0	100	0	0	0	0	0	214
07:45 AM	6	93	1	0	100	0	0	1	0	1	1	114	5	0	120	1	0	0	0	1	222
Total	24	382	3	0	409	10	0	32	0	42	7	379	30	0	416	1	0	0	0	1	868
08:00 AM	2	91	2	0	95	4	0	1	0	5	1	120	6	0	127	0	0	0	0	0	227
08:15 AM	2	87	0	0	89	2	0	1	0	3	0	93	6	0	99	0	0	1	0	1	192
08:30 AM	1	81	0	0	82	3	0	1	0	4	3	99	4	0	106	0	1	0	0	1	193
08:45 AM	2	75	1	0	78	4	0	1	0	5	0	77	7	0	84	1	0	0	0	1	168
Total	7	334	3	0	344	13	0	4	0	17	4	389	23	0	416	1	1	1	0	3	780
09:00 AM	1	80	2	0	83	5	0	1	0	6	0	62	12	0	74	0	0	0	0	0	163
09:15 AM	1	60	0	0	61	0	0	0	0	0	2	62	4	0	68	3	0	1	0	4	133
09:30 AM	0	69	1	0	70	2	0	0	0	2	1	84	4	0	89	0	0	1	0	1	162
09:45 AM	0	57	1	0	58	1	0	0	0	1	0	74	2	0	76	0	0	1	0	1	136
Total	2	266	4	0	272	8	0	1	0	9	3	282	22	0	307	3	0	3	0	6	594
10:00 AM	1	58	0	0	59	3	0	0	0	3	0	79	3	0	82	1	0	0	0	1	145
10:15 AM	0	69	1	0	70	1	0	0	0	1	0	56	0	0	56	0	0	0	0	0	127
10:30 AM	4	63	0	0	67	2	0	1	0	3	0	83	0	0	83	1	0	0	0	1	154
10:45 AM	1	72	0	0	73	3	0	3	0	6	1	69	5	0	75	0	0	0	0	0	154
Total	6	262	1	0	269	9	0	4	0	13	1	287	8	0	296	2	0	0	0	2	580
11:00 AM	1	71	1	0	73	13	0	6	0	19	2	87	2	0	91	3	0	3	0	6	189
11:15 AM	1	61	1	0	63	5	0	5	0	10	0	65	4	0	69	0	0	0	0	0	142
11:30 AM	2	62	1	0	65	5	1	6	0	12	2	63	0	0	65	0	1	2	0	3	145
11:45 AM	4	75	1	0	80	9	0	5	0	14	3	90	5	0	98	0	0	3	0	3	195
Total	8	269	4	0	281	32	1	22	0	55	7	305	11	0	323	3	1	8	0	12	671
12:00 PM	1	68	0	0	69	10	0	7	0	17	2	71	11	0	84	0	0	2	0	2	172
12:15 PM	3	70	0	0	73	5	0	2	0	7	0	86	7	0	93	1	0	3	0	4	177
12:30 PM	7	87	1	0	95	3	0	1	0	4	2	103	9	0	114	1	0	0	0	1	214
12:45 PM	5	79	0	0	84	1	0	2	0	3	0	90	11	0	101	0	0	2	0	2	190
Total	16	304	1	0	321	19	0	12	0	31	4	350	38	0	392	2	0	7	0	9	753
01:00 PM	3	76	2	0	81	5	0	7	0	12	1	82	9	0	92	1	1	0	0	2	187
01:15 PM	1	80	1	0	82	0	0	0	0	0	1	110	4	0	115	1	0	1	0	2	199
01:30 PM	0	76	1	0	77	3	0	0	0	3	0	94	2	0	96	1	0	1	0	2	178
01:45 PM	3	83	2	0	88	3	0	1	0	4	0	88	3	0	91	0	0	2	0	2	185
Total	7	315	6	0	328	11	0	8	0	19	2	374	18	0	394	3	1	4	0	8	749
02:00 PM	7	87	3	0	97	4	0	11	0	15	1	89	4	0	94	1	0	0	0	1	207
02:15 PM	11	87	0	0	98	6	0	5	0	11	0	71	5	0	76	1	0	0	0	1	186
02:30 PM	14	104	0	0	118	2	0	3	0	5	1	138	6	0	145	1	0	5	0	6	274
02:45 PM	17	87	1	0	105	3	0	6	0	9	0	146	16	0	162	1	0	1	0	2	278
Total	49	365	4	0	418	15	0	25	0	40	2	444	31	0	477	4	0	6	0	10	945
03:00 PM	0	83	2	0	85	33	0	67	0	100	2	135	2	0	139	1	0	2	0	3	327
03:15 PM	2	91	0	0	93	10	0	8	0	18	2	122	1	0	125	0	0	3	0	3	239
03:30 PM	1	90	0	0	91	7	0	14	0	21	0	102	3	0	105	6	0	3	0	9	226

DocuSign Envelope ID: 5C03745C-4B01-4834-A65D-B77F558A4F46

Quality Counts

920 Blairhill Rd, Ste B-106
Charlotte, NC 28217

File Name : 15411712 - Brevard Rd -- Industrial Dr_Borg Warner Dr
Site Code : 15411712
Start Date : 4/20/2021

Groups Printed- Classes 1, 2, 3

	Brevard Rd Southbound					Borg Warner Dr Westbound					Brevard Rd Northbound					Industrial Dr Eastbound					
Start Time	Left	Thru	Right	U-Turn	App. Total	Left	Thru	Right	U-Turn	App. Total	Left	Thru	Right	U-Turn	App. Total	Left	Thru	Right	U-Turn	App. Total	Int. Total
03:45 PM	0	83	0	0	83	5	0	8	0	13	3	139	2	0	144	3	0	4	0	7	247
Total	3	347	2	0	352	55	0	97	0	152	7	498	8	0	513	10	0	12	0	22	1039
04:00 PM	0	105	0	0	105	6	0	10	0	16	0	121	2	0	123	1	0	0	0	1	245
04:15 PM	0	113	0	1	114	5	0	4	0	9	0	142	0	0	142	1	0	3	0	4	269
04:30 PM	2	122	0	0	124	9	0	6	0	15	0	148	1	0	149	0	0	0	0	0	288
04:45 PM	0	95	0	0	95	5	0	10	0	15	0	136	0	0	136	0	0	1	0	1	247
Total	2	435	0	1	438	25	0	30	0	55	0	547	3	0	550	2	0	4	0	6	1049
05:00 PM	1	88	0	0	89	7	0	6	0	13	1	147	1	0	149	0	0	1	0	1	252
05:15 PM	0	109	0	0	109	9	0	10	0	19	1	159	1	0	161	1	0	0	0	1	290
05:30 PM	0	107	1	0	108	3	0	7	0	10	0	163	1	0	164	0	0	0	0	0	282
05:45 PM	1	113	0	0	114	2	0	0	0	2	0	102	1	0	103	1	0	0	0	1	220
Total	2	417	1	0	420	21	0	23	0	44	2	571	4	0	577	2	0	1	0	3	1044
06:00 PM	1	99	0	0	100	3	0	1	0	4	0	110	2	0	112	0	0	1	0	1	217
06:15 PM	0	77	0	0	77	2	2	1	0	5	0	98	0	0	98	0	0	0	0	0	180
06:30 PM	0	70	0	0	70	3	0	1	0	4	1	67	1	0	69	0	1	0	0	1	144
06:45 PM	0	65	0	0	65	15	2	11	0	28	0	84	1	0	85	0	1	1	0	2	180
Total	1	311	0	0	312	23	4	14	0	41	1	359	4	0	364	0	2	2	0	4	721
Grand Total	207	4204	36	1	4448	246	5	275	0	526	44	4945	258	0	5247	33	5	48	0	86	10307
Apprch %	4.7	94.5	0.8	0		46.8	1	52.3	0		0.8	94.2	4.9	0		38.4	5.8	55.8	0		
Total %	2	40.8	0.3	0	43.2	2.4	0	2.7	0	5.1	0.4	48	2.5	0	50.9	0.3	0	0.5	0	0.8	

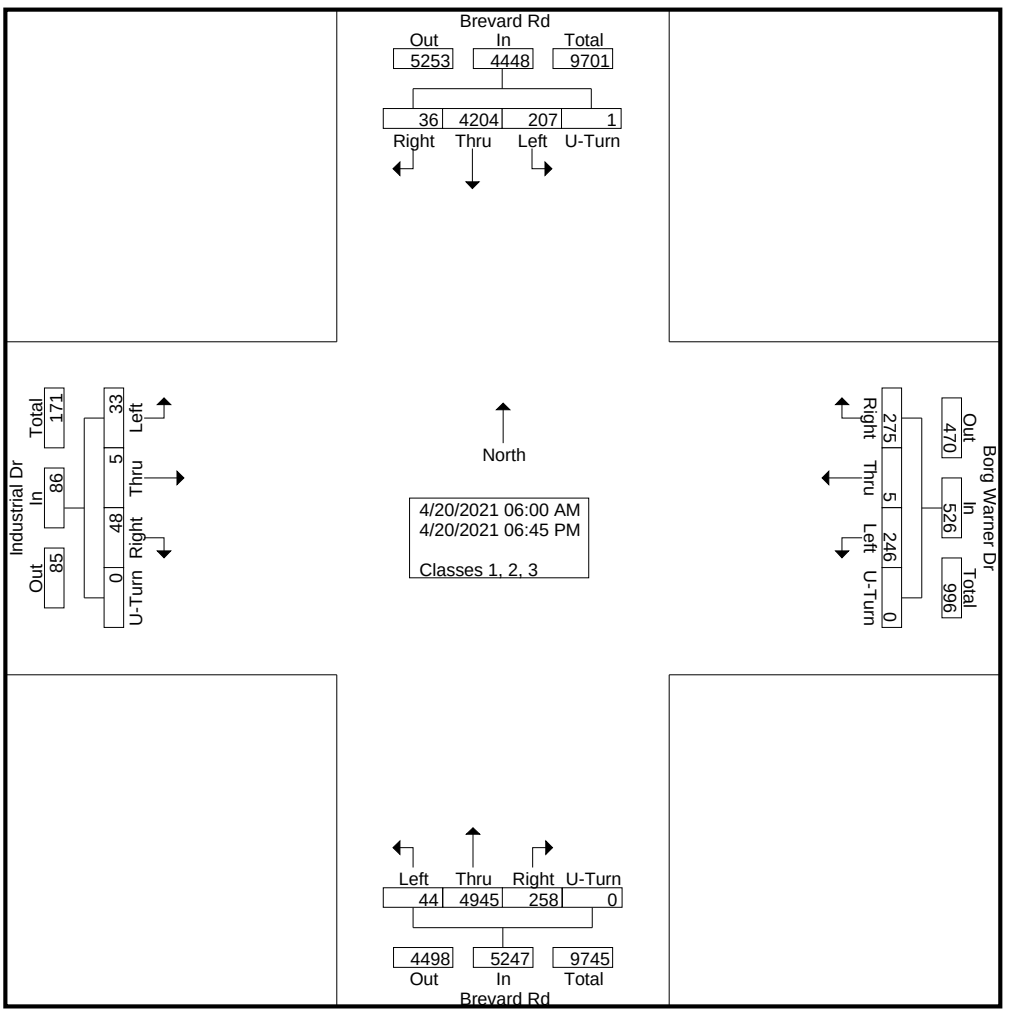

DocuSign Envelope ID: 5C03745C-4B01-4834-A65D-B77F558A4F46

Quality Counts

920 Blairhill Rd, Ste B-106
Charlotte, NC 28217

File Name : 15411712 - Brevard Rd -- Industrial Dr_Borg Warner Dr
Site Code : 15411712
Start Date : 4/20/2021
Page No : 3

	Brevard Rd Southbound					Borg Warner Dr Westbound					Brevard Rd Northbound					Industrial Dr Eastbound					
Start Time	Left	Thru	Right	U-Turn	App. Total	Left	Thru	Right	U-Turn	App. Total	Left	Thru	Right	U-Turn	App. Total	Left	Thru	Right	U-Turn	App. Total	Int. Total
Peak Hour Analysis From 06:00 AM to 11:45 AM - Peak 1 of 1																					
Peak Hour for Entire Intersection Begins at 07:15 AM																					
07:15 AM	3	**100**	0	0	103	0	0	**6**	0	**6**	1	102	**10**	0	113	0	0	0	0	0	222
07:30 AM	**10**	100	1	0	**111**	1	0	2	0	3	**3**	89	8	0	100	0	0	0	0	0	214
07:45 AM	6	93	1	0	100	0	0	1	0	1	1	114	5	0	120	**1**	0	0	0	**1**	222
08:00 AM	2	91	**2**	0	95	**4**	0	1	0	5	1	**120**	6	0	**127**	0	0	0	0	0	**227**
Total Volume	21	384	4	0	409	5	0	10	0	15	6	425	29	0	460	1	0	0	0	1	885
% App. Total	5.1	93.9	1	0		33.3	0	66.7	0		1.3	92.4	6.3	0		100	0	0	0		
PHF	.525	.960	.500	.000	.921	.313	.000	.417	.000	.625	.500	.885	.725	.000	.906	.250	.000	.000	.000	.250	.975

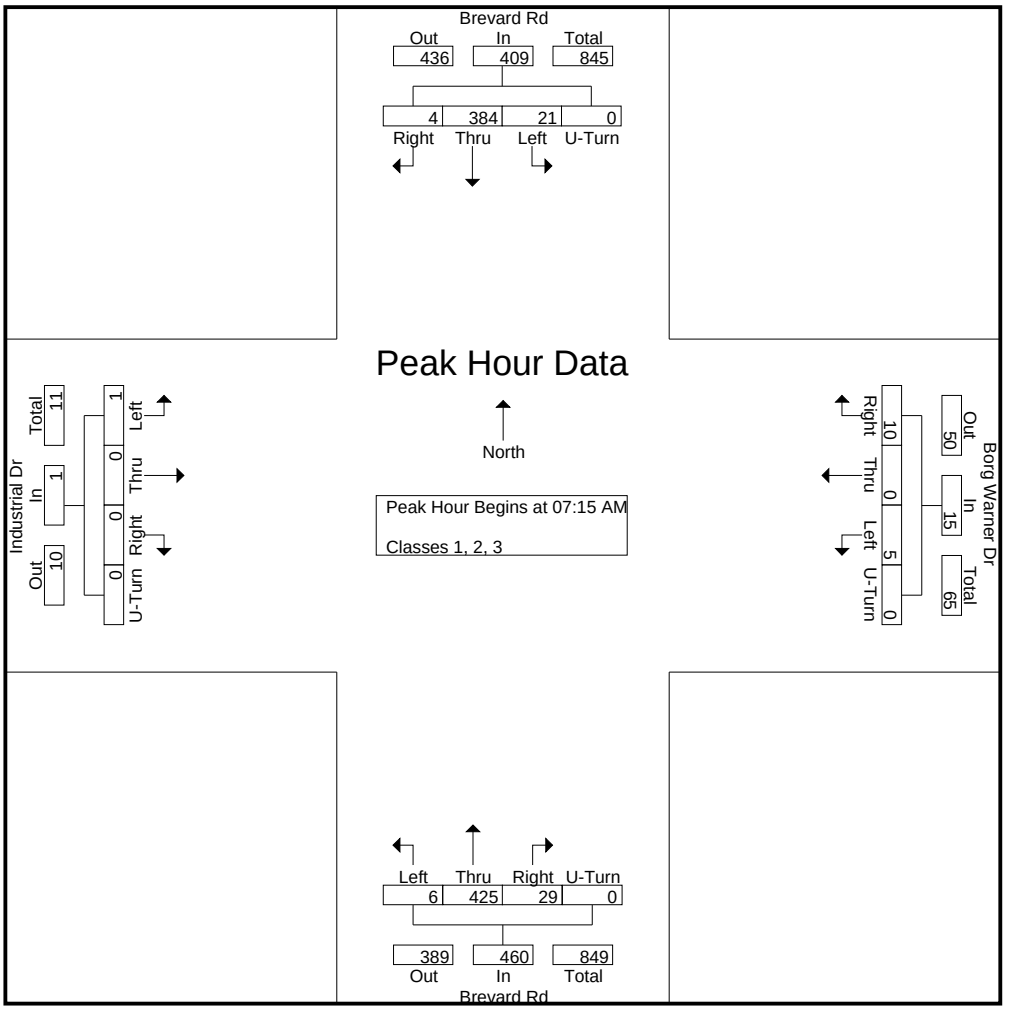

DocuSign Envelope ID: 5C03745C-4B01-4834-A65D-B77F558A4F46

Quality Counts

920 Blairhill Rd, Ste B-106
Charlotte, NC 28217

File Name : 15411712 - Brevard Rd -- Industrial Dr_Borg Warner Dr
Site Code : 15411712
Start Date : 4/20/2021

	Brevard Rd Southbound					Borg Warner Dr Westbound					Brevard Rd Northbound					Industrial Dr Eastbound					
Start Time	Left	Thru	Right	U-Turn	App. Total	Left	Thru	Right	U-Turn	App. Total	Left	Thru	Right	U-Turn	App. Total	Left	Thru	Right	U-Turn	App. Total	Int. Total
Peak Hour Analysis From 12:00 PM to 06:45 PM - Peak 1 of 1																					
Peak Hour for Entire Intersection Begins at 02:30 PM																					
02:30 PM	14	**104**	0	0	**118**	2	0	3	0	5	1	138	6	0	145	**1**	0	**5**	0	**6**	274
02:45 PM	**17**	87	1	0	105	3	0	6	0	9	0	**146**	**16**	0	**162**	1	0	1	0	2	278
03:00 PM	0	83	**2**	0	85	**33**	0	**67**	0	**100**	**2**	135	2	0	139	1	0	2	0	3	**327**
03:15 PM	2	91	0	0	93	10	0	8	0	18	2	122	1	0	125	0	0	3	0	3	239
Total Volume	33	365	3	0	401	48	0	84	0	132	5	541	25	0	571	3	0	11	0	14	1118
% App. Total	8.2	91	0.7	0		36.4	0	63.6	0		0.9	94.7	4.4	0		21.4	0	78.6	0		
PHF	.485	.877	.375	.000	.850	.364	.000	.313	.000	.330	.625	.926	.391	.000	.881	.750	.000	.550	.000	.583	.855

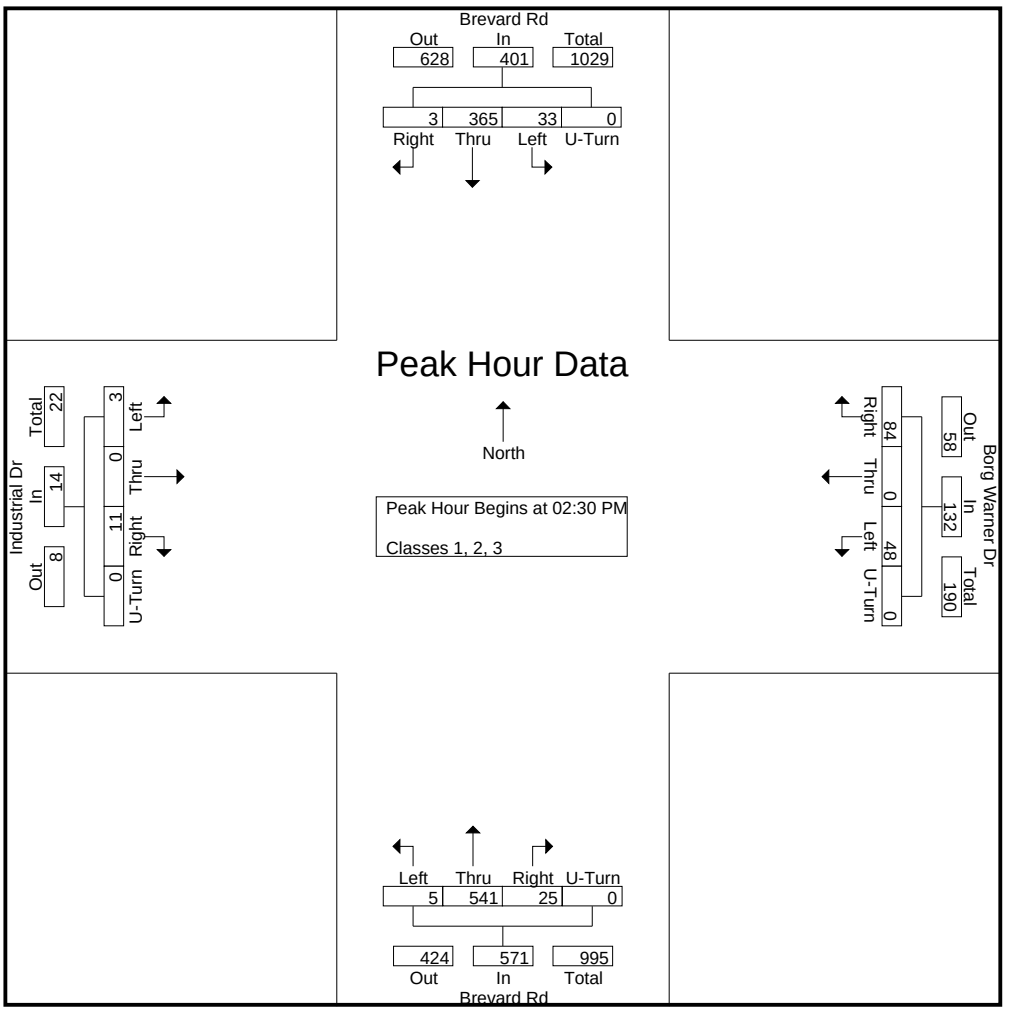

DocuSign Envelope ID: 5C03745C-4B01-4834-A65D-B77F558A4F46

Quality Counts

920 Blairhill Rd, Ste B-106
Charlotte, NC 28217

File Name : 15411712 - Brevard Rd -- Industrial Dr_Borg Warner Dr
Site Code : 15411712
Start Date : 4/20/2021

Groups Printed- Classes 4, 5, 6, 7

	Brevard Rd Southbound					Borg Warner Dr Westbound					Brevard Rd Northbound					Industrial Dr Eastbound					
Start Time	Left	Thru	Right	U-Turn	App. Total	Left	Thru	Right	U-Turn	App. Total	Left	Thru	Right	U-Turn	App. Total	Left	Thru	Right	U-Turn	App. Total	Int. Total
06:00 AM	0	4	0	0	4	0	0	0	0	0	0	1	0	0	1	0	0	0	0	0	5
06:15 AM	0	1	0	0	1	0	0	0	0	0	0	1	0	0	1	0	0	0	0	0	2
06:30 AM	0	4	0	0	4	0	0	0	0	0	0	1	0	0	1	0	0	0	0	0	5
06:45 AM	0	4	0	0	4	0	0	0	0	0	0	3	0	0	3	0	0	0	0	0	7
Total	0	13	0	0	13	0	0	0	0	0	0	6	0	0	6	0	0	0	0	0	19
07:00 AM	0	5	0	0	5	0	0	0	0	0	0	1	0	0	1	0	0	0	0	0	6
07:15 AM	0	3	0	0	3	0	0	0	0	0	0	6	0	0	6	0	0	0	0	0	9
07:30 AM	0	10	0	0	10	0	0	0	0	0	0	3	0	0	3	0	0	0	0	0	13
07:45 AM	0	5	0	0	5	0	0	0	0	0	0	6	0	0	6	0	0	0	0	0	11
Total	0	23	0	0	23	0	0	0	0	0	0	16	0	0	16	0	0	0	0	0	39
08:00 AM	0	5	0	0	5	0	0	0	0	0	0	6	0	0	6	0	0	0	0	0	11
08:15 AM	0	8	0	0	8	0	0	0	0	0	0	6	0	0	6	0	0	1	0	1	15
08:30 AM	0	4	0	0	4	0	0	0	0	0	0	7	1	0	8	0	0	0	0	0	12
08:45 AM	0	4	0	0	4	0	0	0	0	0	0	7	1	0	8	0	0	0	0	0	12
Total	0	21	0	0	21	0	0	0	0	0	0	26	2	0	28	0	0	1	0	1	50
09:00 AM	0	3	0	0	3	0	0	0	0	0	0	6	0	0	6	0	0	0	0	0	9
09:15 AM	0	9	0	0	9	0	0	0	0	0	0	4	0	0	4	0	0	0	0	0	13
09:30 AM	0	2	0	0	2	0	0	0	0	0	0	7	1	0	8	0	0	0	0	0	10
09:45 AM	0	6	1	0	7	1	0	0	0	1	0	6	0	0	6	0	0	0	0	0	14
Total	0	20	1	0	21	1	0	0	0	1	0	23	1	0	24	0	0	0	0	0	46
10:00 AM	1	2	0	0	3	0	0	0	0	0	0	12	0	0	12	0	0	0	0	0	15
10:15 AM	1	6	0	0	7	0	0	0	0	0	0	6	0	0	6	1	0	0	0	1	14
10:30 AM	0	6	0	0	6	0	0	0	0	0	0	6	0	0	6	0	0	0	0	0	12
10:45 AM	0	3	0	0	3	0	0	1	0	1	0	9	0	0	9	0	0	0	0	0	13
Total	2	17	0	0	19	0	0	1	0	1	0	33	0	0	33	1	0	0	0	1	54
11:00 AM	1	4	1	0	6	0	0	0	0	0	0	8	0	0	8	0	0	0	0	0	14
11:15 AM	1	9	0	0	10	0	0	1	0	1	0	8	1	0	9	0	0	1	0	1	21
11:30 AM	1	8	0	0	9	1	0	0	0	1	1	8	1	0	10	1	0	0	0	1	21
11:45 AM	0	4	0	0	4	0	0	2	0	2	0	7	0	0	7	0	0	0	0	0	13
Total	3	25	1	0	29	1	0	3	0	4	1	31	2	0	34	1	0	1	0	2	69
12:00 PM	0	6	0	0	6	0	0	0	0	0	1	8	0	0	9	0	0	0	0	0	15
12:15 PM	0	4	0	0	4	0	0	0	0	0	0	5	0	0	5	0	0	1	0	1	10
12:30 PM	0	5	0	0	5	0	0	1	0	1	0	8	1	0	9	0	0	0	0	0	15
12:45 PM	0	6	0	0	6	0	0	0	0	0	0	6	0	0	6	0	0	0	0	0	12
Total	0	21	0	0	21	0	0	1	0	1	1	27	1	0	29	0	0	1	0	1	52
01:00 PM	0	5	0	0	5	1	0	0	0	1	0	5	0	0	5	0	0	0	0	0	11
01:15 PM	0	6	0	0	6	0	0	0	0	0	0	6	0	0	6	0	0	0	0	0	12
01:30 PM	1	4	1	0	6	0	0	0	0	0	0	6	0	0	6	0	0	1	0	1	13
01:45 PM	1	3	0	0	4	0	0	1	0	1	0	7	0	0	7	0	0	0	0	0	12
Total	2	18	1	0	21	1	0	1	0	2	0	24	0	0	24	0	0	1	0	1	48
02:00 PM	1	3	0	0	4	0	0	1	0	1	0	6	0	0	6	0	0	0	0	0	11
02:15 PM	0	6	0	0	6	0	0	0	0	0	0	5	0	0	5	0	0	0	0	0	11
02:30 PM	0	4	0	0	4	0	0	0	0	0	1	11	0	0	12	0	0	0	0	0	16
02:45 PM	0	4	1	0	5	0	1	0	0	1	0	8	0	0	8	0	0	0	0	0	14
Total	1	17	1	0	19	0	1	1	0	2	1	30	0	0	31	0	0	0	0	0	52
03:00 PM	2	1	0	0	3	1	0	0	0	1	0	14	0	0	14	0	0	1	0	1	19
03:15 PM	0	4	0	0	4	0	0	1	0	1	0	10	0	0	10	0	0	0	0	0	15
03:30 PM	0	4	0	0	4	2	0	1	0	3	0	12	0	0	12	0	0	0	0	0	19

DocuSign Envelope ID: 5C03745C-4B01-4834-A65D-B77F558A4F46

Quality Counts

920 Blairhill Rd, Ste B-106
Charlotte, NC 28217

File Name : 15411712 - Brevard Rd -- Industrial Dr_Borg Warner Dr
Site Code : 15411712
Start Date : 4/20/2021

Groups Printed- Classes 4, 5, 6, 7

	Brevard Rd Southbound					Borg Warner Dr Westbound					Brevard Rd Northbound					Industrial Dr Eastbound					
Start Time	Left	Thru	Right	U-Turn	App. Total	Left	Thru	Right	U-Turn	App. Total	Left	Thru	Right	U-Turn	App. Total	Left	Thru	Right	U-Turn	App. Total	Int. Total
03:45 PM	1	7	0	0	8	0	0	0	0	0	2	10	0	0	12	0	0	1	0	1	21
Total	3	16	0	0	19	3	0	2	0	5	2	46	0	0	48	0	0	2	0	2	74
04:00 PM	0	6	0	0	6	0	0	1	0	1	0	4	0	0	4	0	0	0	0	0	11
04:15 PM	0	4	0	0	4	0	0	1	0	1	0	11	0	0	11	0	0	1	0	1	17
04:30 PM	0	3	0	0	3	1	0	0	0	1	1	9	2	0	12	0	0	1	0	1	17
04:45 PM	0	2	0	0	2	0	0	0	0	0	0	6	0	0	6	0	0	0	0	0	8
Total	0	15	0	0	15	1	0	2	0	3	1	30	2	0	33	0	0	2	0	2	53
05:00 PM	0	3	0	0	3	1	0	1	0	2	0	14	0	0	14	0	0	0	0	0	19
05:15 PM	0	4	0	0	4	0	0	0	0	0	0	8	0	0	8	0	0	0	0	0	12
05:30 PM	0	3	0	0	3	0	0	0	0	0	0	4	0	0	4	0	0	0	0	0	7
05:45 PM	0	3	0	0	3	0	0	0	0	0	0	3	0	0	3	0	0	0	0	0	6
Total	0	13	0	0	13	1	0	1	0	2	0	29	0	0	29	0	0	0	0	0	44
06:00 PM	0	2	0	0	2	0	0	0	0	0	0	5	0	0	5	0	0	0	0	0	7
06:15 PM	0	1	0	0	1	0	0	0	0	0	0	2	0	0	2	0	0	0	0	0	3
06:30 PM	0	3	0	0	3	0	0	0	0	0	0	4	0	0	4	0	0	0	0	0	7
06:45 PM	0	1	0	0	1	0	0	0	0	0	0	5	0	0	5	0	0	0	0	0	6
Total	0	7	0	0	7	0	0	0	0	0	0	16	0	0	16	0	0	0	0	0	23
Grand Total	11	226	4	0	241	8	1	12	0	21	6	337	8	0	351	2	0	8	0	10	623
Apprch %	4.6	93.8	1.7	0		38.1	4.8	57.1	0		1.7	96	2.3	0		20	0	80	0		
Total %	1.8	36.3	0.6	0	38.7	1.3	0.2	1.9	0	3.4	1	54.1	1.3	0	56.3	0.3	0	1.3	0	1.6	

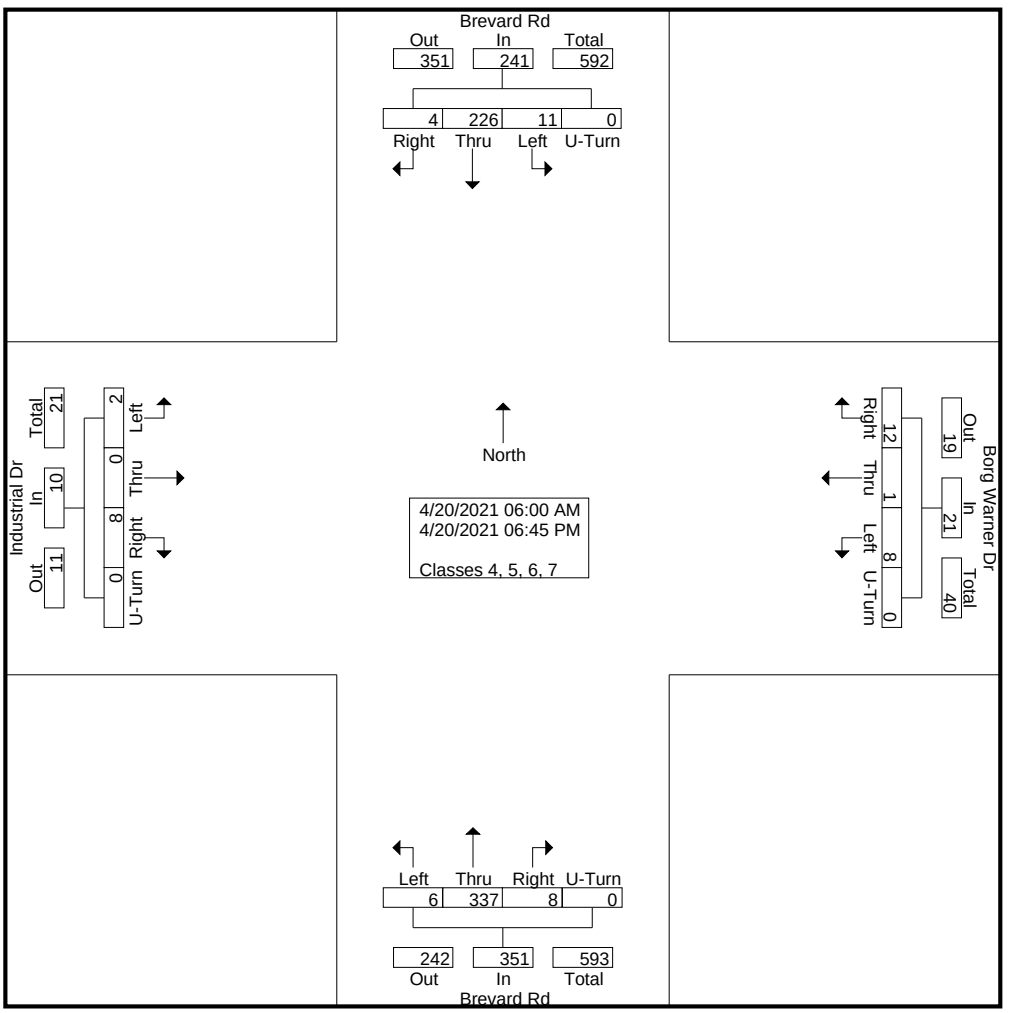

DocuSign Envelope ID: 5C03745C-4B01-4834-A65D-B77F558A4F46

Quality Counts

920 Blairhill Rd, Ste B-106
Charlotte, NC 28217

File Name : 15411712 - Brevard Rd -- Industrial Dr_Borg Warner Dr
Site Code : 15411712
Start Date : 4/20/2021
Page No : 3

	Brevard Rd Southbound					Borg Warner Dr Westbound					Brevard Rd Northbound					Industrial Dr Eastbound					
Start Time	Left	Thru	Right	U-Turn	App. Total	Left	Thru	Right	U-Turn	App. Total	Left	Thru	Right	U-Turn	App. Total	Left	Thru	Right	U-Turn	App. Total	Int. Total
Peak Hour Analysis From 06:00 AM to 11:45 AM - Peak 1 of 1																					
Peak Hour for Entire Intersection Begins at 10:45 AM																					
10:45 AM	0	3	0	0	3	0	0	**1**	0	**1**	0	**9**	0	0	9	0	0	0	0	0	13
11:00 AM	**1**	4	**1**	0	6	0	0	0	0	0	0	8	0	0	8	0	0	0	0	0	14
11:15 AM	1	**9**	0	0	**10**	0	0	1	0	1	0	8	**1**	0	9	0	0	**1**	0	**1**	**21**
11:30 AM	1	8	0	0	9	**1**	0	0	0	1	**1**	8	1	0	**10**	**1**	0	0	0	1	21
Total Volume	3	24	1	0	28	1	0	2	0	3	1	33	2	0	36	1	0	1	0	2	69
% App. Total	10.7	85.7	3.6	0		33.3	0	66.7	0		2.8	91.7	5.6	0		50	0	50	0		
PHF	.750	.667	.250	.000	.700	.250	.000	.500	.000	.750	.250	.917	.500	.000	.900	.250	.000	.250	.000	.500	.821

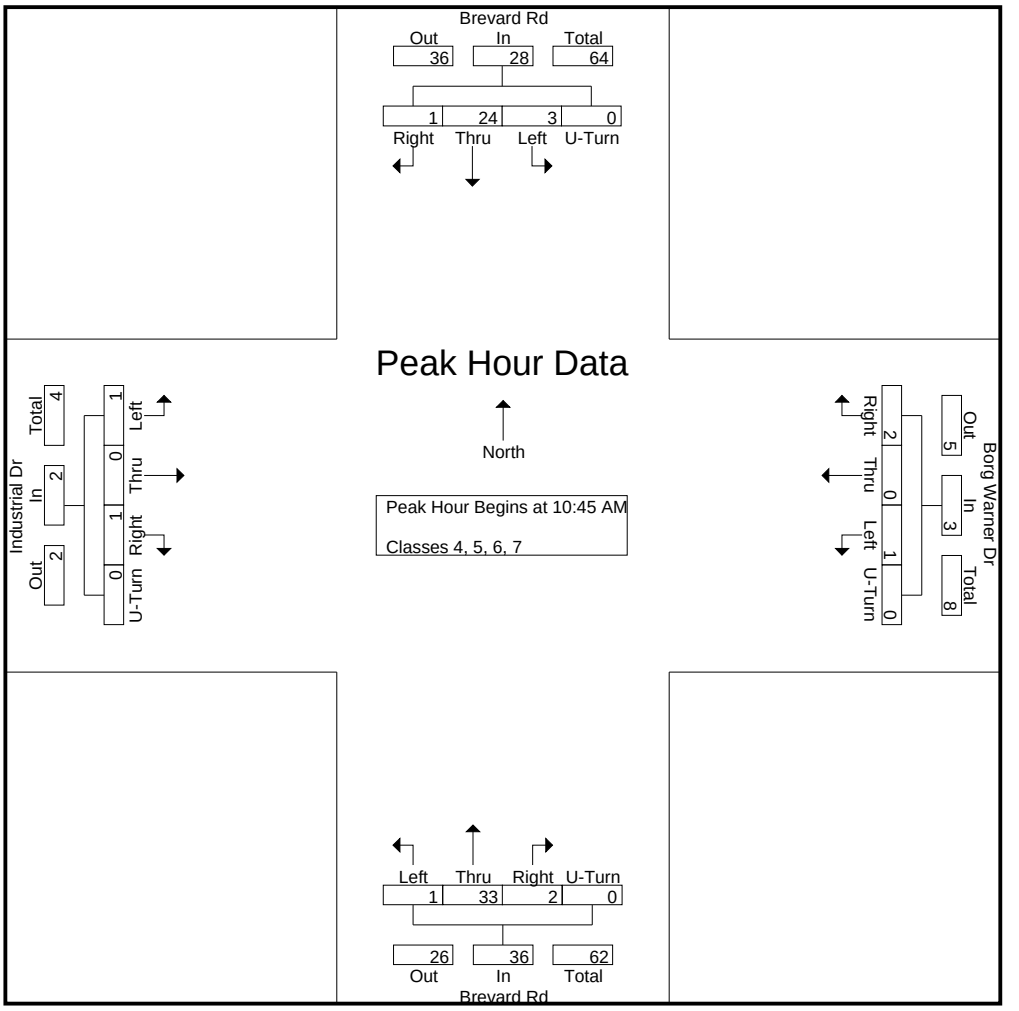

DocuSign Envelope ID: 5C03745C-4B01-4834-A65D-B77F558A4F46

Quality Counts

920 Blairhill Rd, Ste B-106
Charlotte, NC 28217

File Name : 15411712 - Brevard Rd -- Industrial Dr_Borg Warner Dr
Site Code : 15411712
Start Date : 4/20/2021
Page No : 4

	Brevard Rd Southbound					Borg Warner Dr Westbound					Brevard Rd Northbound					Industrial Dr Eastbound					
Start Time	Left	Thru	Right	U-Turn	App. Total	Left	Thru	Right	U-Turn	App. Total	Left	Thru	Right	U-Turn	App. Total	Left	Thru	Right	U-Turn	App. Total	Int. Total
Peak Hour Analysis From 12:00 PM to 06:45 PM - Peak 1 of 1																					
Peak Hour for Entire Intersection Begins at 03:00 PM																					
03:00 PM	**2**	1	0	0	3	1	0	0	0	1	0	**14**	0	0	**14**	0	0	**1**	0	**1**	19
03:15 PM	0	4	0	0	4	0	0	**1**	0	1	0	10	0	0	10	0	0	0	0	0	15
03:30 PM	0	4	0	0	4	**2**	0	1	0	**3**	0	12	0	0	12	0	0	0	0	0	19
03:45 PM	1	**7**	0	0	**8**	0	0	0	0	0	**2**	10	0	0	12	0	0	1	0	1	**21**
Total Volume	3	16	0	0	19	3	0	2	0	5	2	46	0	0	48	0	0	2	0	2	74
% App. Total	15.8	84.2	0	0		60	0	40	0		4.2	95.8	0	0		0	0	100	0		
PHF	.375	.571	.000	.000	.594	.375	.000	.500	.000	.417	.250	.821	.000	.000	.857	.000	.000	.500	.000	.500	.881

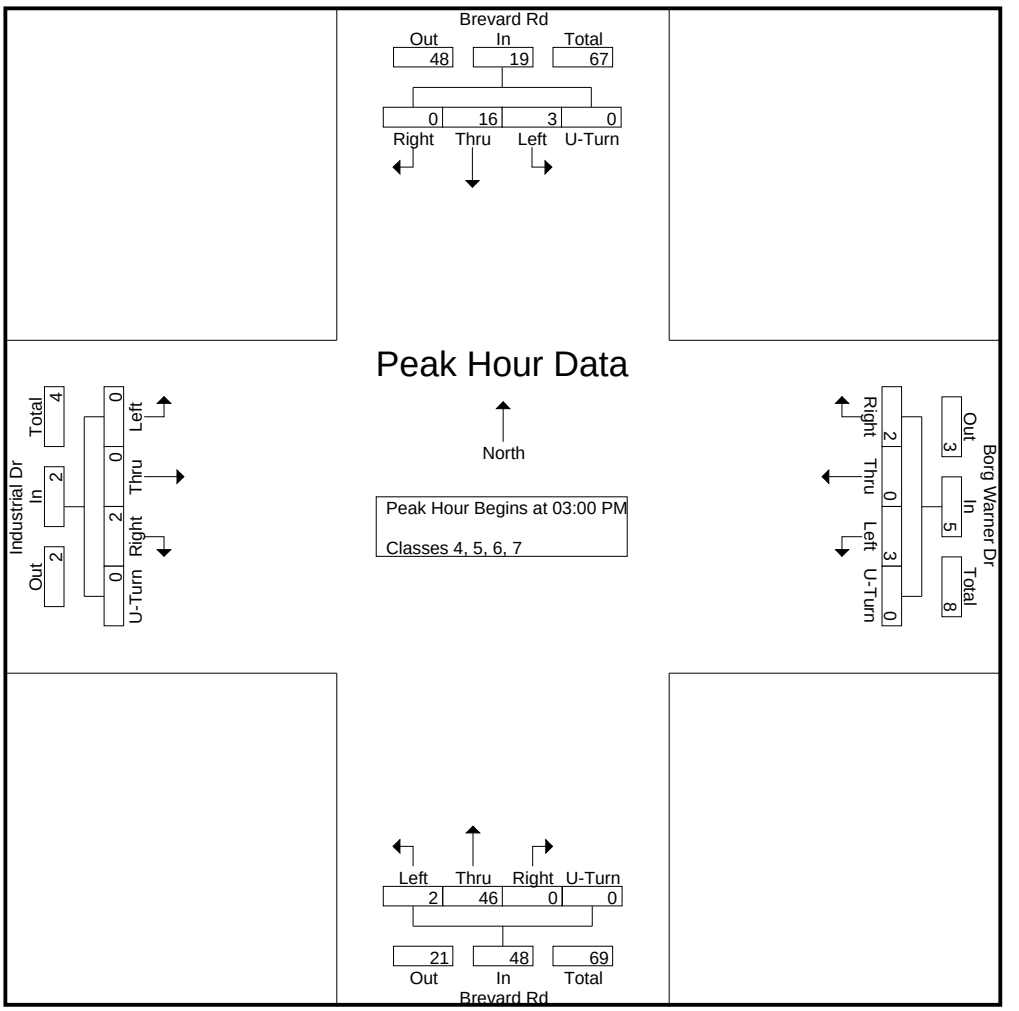

DocuSign Envelope ID: 5C03745C-4B01-4834-A65D-B77F558A4F46

Quality Counts

920 Blairhill Rd, Ste B-106
Charlotte, NC 28217

File Name : 15411712 - Brevard Rd -- Industrial Dr_Borg Warner Dr
Site Code : 15411712
Start Date : 4/20/2021
Page No : 1

Groups Printed- Classes 8, 9, 10

	Brevard Rd Southbound					Borg Warner Dr Westbound					Brevard Rd Northbound					Industrial Dr Eastbound					
Start Time	Left	Thru	Right	U-Turn	App. Total	Left	Thru	Right	U-Turn	App. Total	Left	Thru	Right	U-Turn	App. Total	Left	Thru	Right	U-Turn	App. Total	Int. Total
06:00 AM	0	1	0	0	1	0	0	0	0	0	0	0	0	0	0	0	0	0	0	0	1
06:15 AM	0	1	0	0	1	0	0	0	0	0	0	0	0	0	0	0	0	0	0	0	1
06:30 AM	0	0	0	0	0	0	0	0	0	0	0	0	2	0	2	0	0	0	0	0	2
06:45 AM	0	0	0	0	0	0	0	1	0	1	0	1	0	0	1	0	0	0	0	0	2
Total	0	2	0	0	2	0	0	1	0	1	0	1	2	0	3	0	0	0	0	0	6
07:00 AM	0	0	0	0	0	0	0	0	0	0	1	1	0	0	2	0	0	0	0	0	2
07:15 AM	0	1	0	0	1	0	0	0	0	0	0	2	1	0	3	0	0	0	0	0	4
07:30 AM	0	1	0	0	1	2	0	0	0	2	0	0	0	0	0	0	0	1	0	1	4
07:45 AM	0	0	0	0	0	0	0	0	0	0	0	1	0	0	1	0	0	0	0	0	1
Total	0	2	0	0	2	2	0	0	0	2	1	4	1	0	6	0	0	1	0	1	11
08:00 AM	0	0	0	0	0	0	0	1	0	1	1	4	0	0	5	0	0	0	0	0	6
08:15 AM	1	0	0	0	1	0	0	0	0	0	0	1	1	0	2	0	0	1	0	1	4
08:30 AM	0	0	0	0	0	0	0	0	0	0	0	0	0	0	0	0	0	0	0	0	0
08:45 AM	1	1	0	0	2	2	0	0	0	2	0	1	1	0	2	0	0	0	0	0	6
Total	2	1	0	0	3	2	0	1	0	3	1	6	2	0	9	0	0	1	0	1	16
09:00 AM	0	2	0	0	2	0	0	0	0	0	0	1	2	0	3	0	0	0	0	0	5
09:15 AM	0	3	0	0	3	1	0	1	0	2	0	1	0	0	1	0	0	0	0	0	6
09:30 AM	0	1	0	0	1	0	0	0	0	0	0	0	1	0	1	0	0	0	0	0	2
09:45 AM	1	0	0	0	1	0	0	0	0	0	0	1	0	0	1	0	0	0	0	0	2
Total	1	6	0	0	7	1	0	1	0	2	0	3	3	0	6	0	0	0	0	0	15
10:00 AM	1	2	0	0	3	0	0	0	0	0	0	4	0	0	4	0	0	0	0	0	7
10:15 AM	1	0	0	0	1	1	0	0	0	1	0	2	0	0	2	0	0	0	0	0	4
10:30 AM	0	5	0	0	5	0	0	1	0	1	0	3	0	0	3	0	0	0	0	0	9
10:45 AM	0	0	0	0	0	1	0	0	0	1	0	1	0	0	1	0	0	0	0	0	2
Total	2	7	0	0	9	2	0	1	0	3	0	10	0	0	10	0	0	0	0	0	22
11:00 AM	1	2	0	0	3	1	0	0	0	1	0	0	0	0	0	0	0	0	0	0	4
11:15 AM	0	0	0	0	0	0	0	0	0	0	0	1	0	0	1	0	0	0	0	0	1
11:30 AM	0	0	0	0	0	1	0	0	0	1	0	0	0	0	0	0	0	0	0	0	1
11:45 AM	0	0	0	0	0	1	0	0	0	1	1	3	0	0	4	0	0	0	0	0	5
Total	1	2	0	0	3	3	0	0	0	3	1	4	0	0	5	0	0	0	0	0	11
12:00 PM	1	0	0	0	1	0	0	0	0	0	1	2	2	0	5	0	0	0	0	0	6
12:15 PM	0	1	1	0	2	0	0	0	0	0	0	1	0	0	1	0	0	1	0	1	4
12:30 PM	0	1	0	0	1	1	0	1	0	2	0	1	0	0	1	1	0	0	0	1	5
12:45 PM	0	1	0	0	1	0	0	1	0	1	0	2	1	0	3	0	0	0	0	0	5
Total	1	3	1	0	5	1	0	2	0	3	1	6	3	0	10	1	0	1	0	2	20
01:00 PM	0	0	0	0	0	0	0	0	0	0	0	0	0	0	0	0	0	0	0	0	0
01:15 PM	0	0	0	0	0	1	0	0	0	1	0	0	1	0	1	0	0	0	0	0	2
01:30 PM	0	1	0	0	1	0	0	1	0	1	0	2	0	0	2	0	0	0	0	0	4
01:45 PM	0	0	0	0	0	1	0	0	0	1	0	1	0	0	1	0	0	0	0	0	2
Total	0	1	0	0	1	2	0	1	0	3	0	3	1	0	4	0	0	0	0	0	8
02:00 PM	0	3	0	0	3	0	0	0	0	0	0	1	1	0	2	0	0	0	0	0	5
02:15 PM	0	0	0	0	0	0	0	0	0	0	0	0	1	0	1	0	0	0	0	0	1
02:30 PM	1	3	0	0	4	0	0	1	0	1	0	4	0	0	4	0	0	0	0	0	9
02:45 PM	0	2	0	0	2	1	0	0	0	1	0	1	1	0	2	0	0	0	0	0	5
Total	1	8	0	0	9	1	0	1	0	2	0	6	3	0	9	0	0	0	0	0	20
03:00 PM	0	0	0	0	0	1	0	0	0	1	0	2	0	0	2	0	0	0	0	0	3
03:15 PM	0	2	0	0	2	0	0	1	0	1	0	3	0	0	3	0	0	0	0	0	6
03:30 PM	1	3	0	0	4	0	0	0	0	0	0	3	0	0	3	0	0	0	0	0	7

DocuSign Envelope ID: 5C03745C-4B01-4834-A65D-B77F558A4F46

Quality Counts

920 Blairhill Rd, Ste B-106
Charlotte, NC 28217

File Name : 15411712 - Brevard Rd -- Industrial Dr_Borg Warner Dr
Site Code : 15411712
Start Date : 4/20/2021
Page No : 2

Groups Printed- Classes 8, 9, 10

	Brevard Rd Southbound					Borg Warner Dr Westbound					Brevard Rd Northbound					Industrial Dr Eastbound					
Start Time	Left	Thru	Right	U-Turn	App. Total	Left	Thru	Right	U-Turn	App. Total	Left	Thru	Right	U-Turn	App. Total	Left	Thru	Right	U-Turn	App. Total	Int. Total
03:45 PM	0	2	0	0	2	0	0	0	0	0	0	1	0	0	1	0	0	0	0	0	3
Total	1	7	0	0	8	1	0	1	0	2	0	9	0	0	9	0	0	0	0	0	19
04:00 PM	0	1	0	0	1	1	0	0	0	1	0	0	0	0	0	0	0	0	0	0	2
04:15 PM	0	1	0	0	1	0	0	0	0	0	0	3	1	0	4	0	0	0	0	0	5
04:30 PM	0	1	0	0	1	0	0	0	0	0	0	0	0	0	0	0	0	0	0	0	1
04:45 PM	0	0	0	0	0	0	0	1	0	1	0	2	1	0	3	0	0	0	0	0	4
Total	0	3	0	0	3	1	0	1	0	2	0	5	2	0	7	0	0	0	0	0	12
05:00 PM	0	0	0	0	0	1	0	0	0	1	0	1	0	0	1	0	0	0	0	0	2
05:15 PM	1	1	0	0	2	0	0	0	0	0	0	1	0	0	1	0	0	0	0	0	3
05:30 PM	0	0	0	0	0	1	0	0	0	1	0	1	0	0	1	1	0	0	0	1	3
05:45 PM	1	1	0	0	2	0	0	0	0	0	0	2	0	0	2	0	0	0	0	0	4
Total	2	2	0	0	4	2	0	0	0	2	0	5	0	0	5	1	0	0	0	1	12
06:00 PM	0	0	0	0	0	1	0	0	0	1	0	1	0	0	1	0	0	0	0	0	2
06:15 PM	0	0	0	0	0	0	0	0	0	0	0	0	0	0	0	0	0	0	0	0	0
06:30 PM	0	0	0	0	0	0	0	0	0	0	0	0	0	0	0	0	0	0	0	0	0
06:45 PM	0	1	0	0	1	0	0	0	0	0	0	0	0	0	0	0	0	0	0	0	1
Total	0	1	0	0	1	1	0	0	0	1	0	1	0	0	1	0	0	0	0	0	3
Grand Total	11	45	1	0	57	19	0	10	0	29	4	63	17	0	84	2	0	3	0	5	175
Apprch %	19.3	78.9	1.8	0		65.5	0	34.5	0		4.8	75	20.2	0		40	0	60	0		
Total %	6.3	25.7	0.6	0	32.6	10.9	0	5.7	0	16.6	2.3	36	9.7	0	48	1.1	0	1.7	0	2.9	

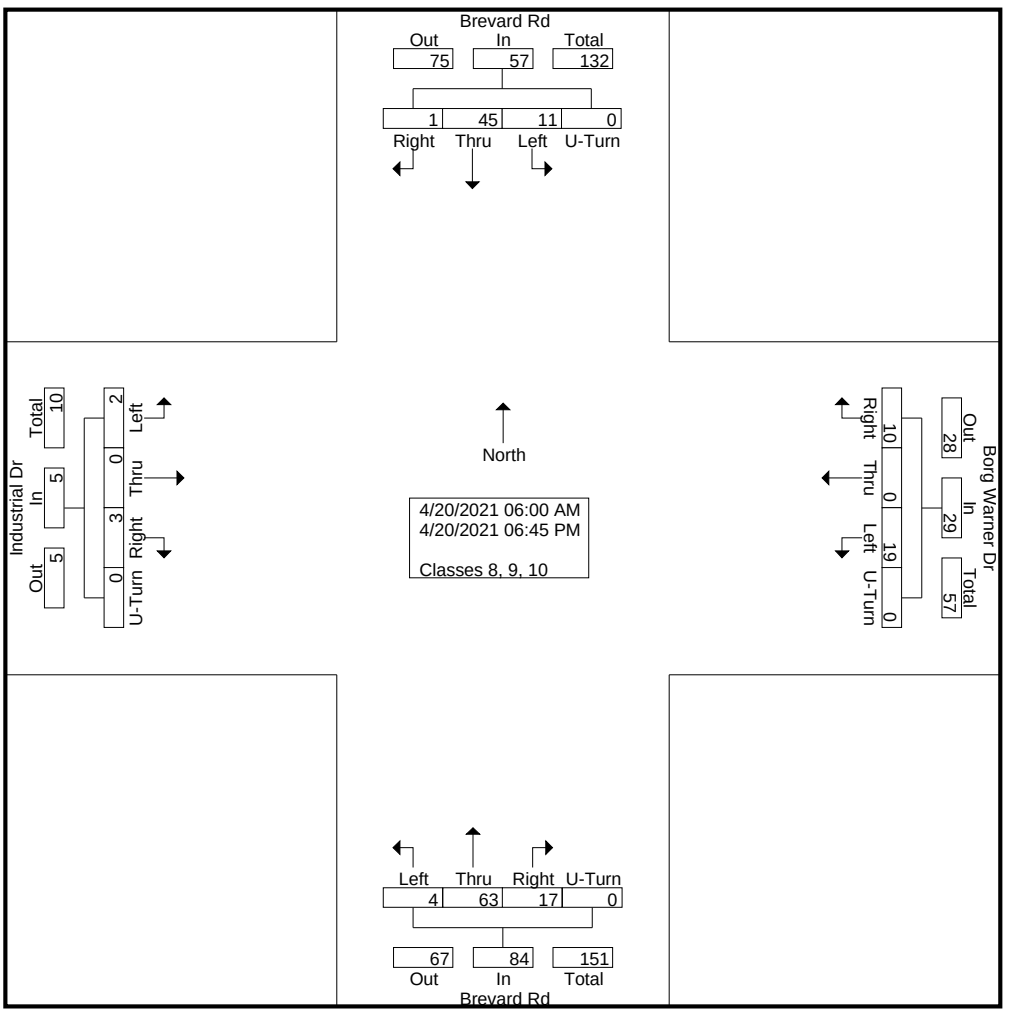

DocuSign Envelope ID: 5C03745C-4B01-4834-A65D-B77F558A4F46

Quality Counts

920 Blairhill Rd, Ste B-106
Charlotte, NC 28217

File Name : 15411712 - Brevard Rd -- Industrial Dr_Borg Warner Dr
Site Code : 15411712
Start Date : 4/20/2021

	Brevard Rd Southbound					Borg Warner Dr Westbound					Brevard Rd Northbound					Industrial Dr Eastbound					
Start Time	Left	Thru	Right	U-Turn	App. Total	Left	Thru	Right	U-Turn	App. Total	Left	Thru	Right	U-Turn	App. Total	Left	Thru	Right	U-Turn	App. Total	Int. Total
Peak Hour Analysis From 06:00 AM to 11:45 AM - Peak 1 of 1																					
Peak Hour for Entire Intersection Begins at 09:45 AM																					
09:45 AM	**1**	0	0	0	1	0	0	0	0	0	0	1	0	0	1	0	0	0	0	0	2
10:00 AM	1	2	0	0	3	0	0	0	0	0	0	**4**	0	0	**4**	0	0	0	0	0	7
10:15 AM	1	0	0	0	1	**1**	0	0	0	**1**	0	2	0	0	2	0	0	0	0	0	4
10:30 AM	0	**5**	0	0	**5**	0	0	**1**	0	1	0	3	0	0	3	0	0	0	0	0	**9**
Total Volume	3	7	0	0	10	1	0	1	0	2	0	10	0	0	10	0	0	0	0	0	22
% App. Total	30	70	0	0		50	0	50	0		0	100	0	0		0	0	0	0		
PHF	.750	.350	.000	.000	.500	.250	.000	.250	.000	.500	.000	.625	.000	.000	.625	.000	.000	.000	.000	.000	.611

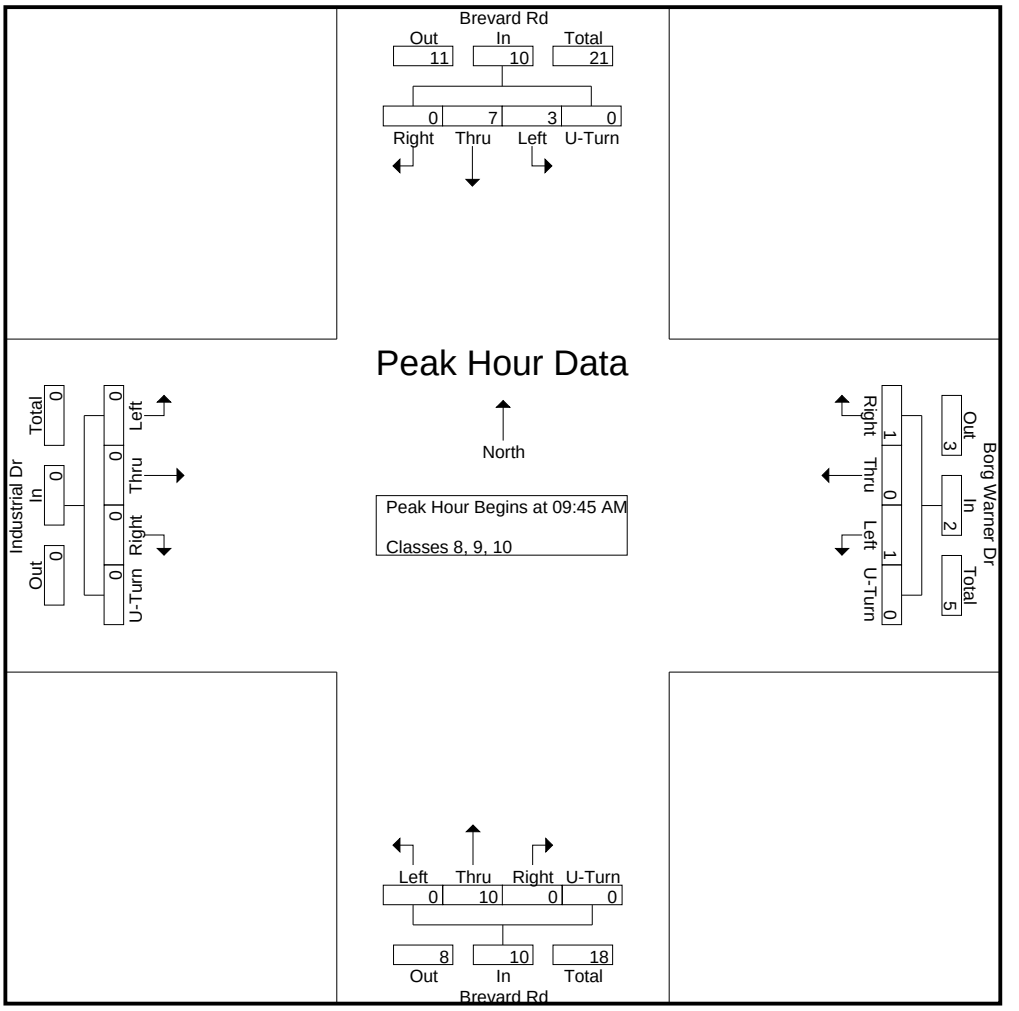

DocuSign Envelope ID: 5C03745C-4B01-4834-A65D-B77F558A4F46

Quality Counts

920 Blairhill Rd, Ste B-106
Charlotte, NC 28217

File Name : 15411712 - Brevard Rd -- Industrial Dr_Borg Warner Dr
Site Code : 15411712
Start Date : 4/20/2021
Page No : 4

	Brevard Rd Southbound					Borg Warner Dr Westbound					Brevard Rd Northbound					Industrial Dr Eastbound					
Start Time	Left	Thru	Right	U-Turn	App. Total	Left	Thru	Right	U-Turn	App. Total	Left	Thru	Right	U-Turn	App. Total	Left	Thru	Right	U-Turn	App. Total	Int. Total
Peak Hour Analysis From 12:00 PM to 06:45 PM - Peak 1 of 1																					
Peak Hour for Entire Intersection Begins at 02:30 PM																					
02:30 PM	**1**	**3**	0	0	**4**	0	0	**1**	0	**1**	0	**4**	0	0	**4**	0	0	0	0	0	**9**
02:45 PM	0	2	0	0	2	**1**	0	0	0	1	0	1	**1**	0	2	0	0	0	0	0	5
03:00 PM	0	0	0	0	0	1	0	0	0	1	0	2	0	0	2	0	0	0	0	0	3
03:15 PM	0	2	0	0	2	0	0	1	0	1	0	3	0	0	3	0	0	0	0	0	6
Total Volume	1	7	0	0	8	2	0	2	0	4	0	10	1	0	11	0	0	0	0	0	23
% App. Total	12.5	87.5	0	0		50	0	50	0		0	90.9	9.1	0		0	0	0	0		
PHF	.250	.583	.000	.000	.500	.500	.000	.500	.000	1.00	.000	.625	.250	.000	.688	.000	.000	.000	.000	.000	.639

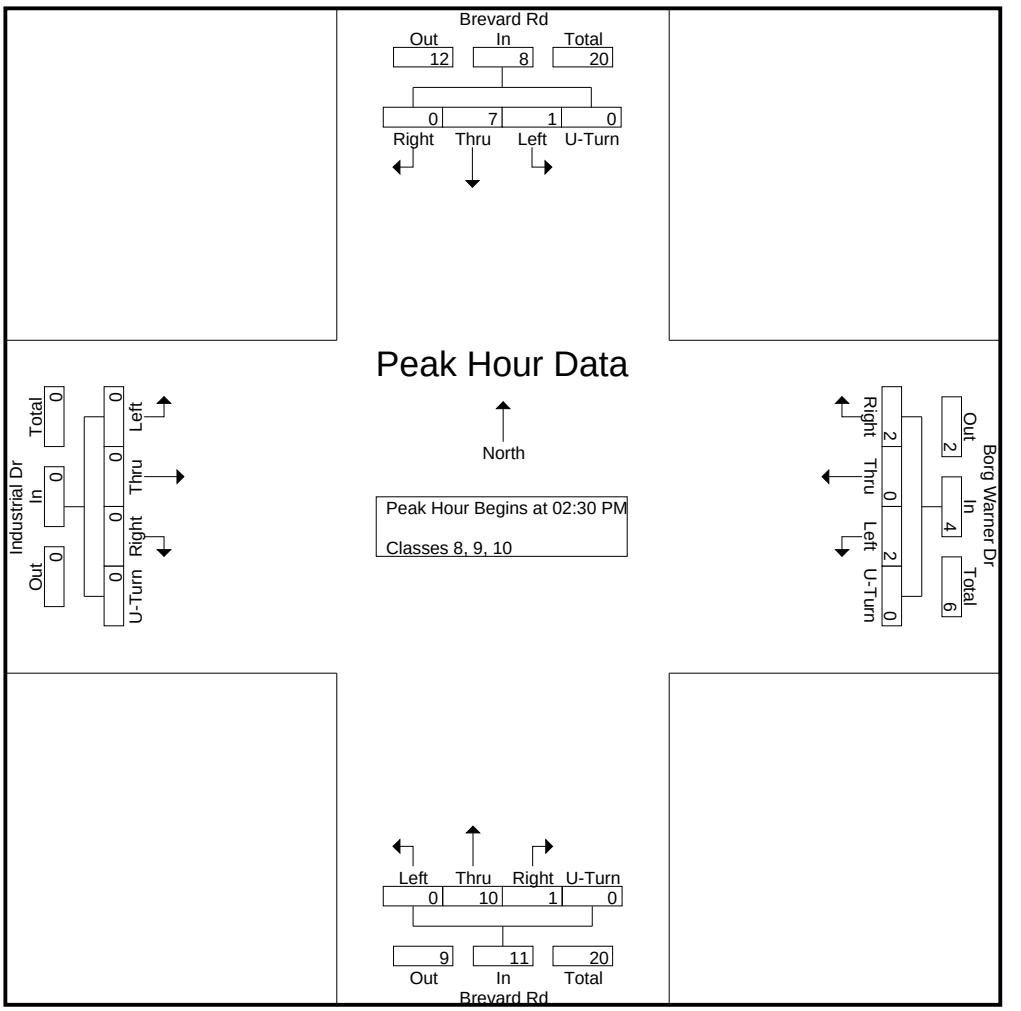

DocuSign Envelope ID: 5C03745C-4B01-4834-A65D-B77F558A4F46

Quality Counts

920 Blairhill Rd, Ste B-106
Charlotte, NC 28217

File Name : 15411712 - Brevard Rd -- Industrial Dr_Borg Warner Dr
Site Code : 15411712
Start Date : 4/20/2021
Page No : 1

Groups Printed- Classes 11, 12, 13

	Brevard Rd Southbound					Borg Warner Dr Westbound					Brevard Rd Northbound					Industrial Dr Eastbound					
Start Time	Left	Thru	Right	U-Turn	App. Total	Left	Thru	Right	U-Turn	App. Total	Left	Thru	Right	U-Turn	App. Total	Left	Thru	Right	U-Turn	App. Total	Int. Total
06:00 AM	0	0	0	0	0	0	0	0	0	0	0	0	0	0	0	0	0	0	0	0	0
06:15 AM	0	0	0	0	0	0	0	0	0	0	0	0	0	0	0	0	0	0	0	0	0
06:30 AM	0	0	0	0	0	0	0	0	0	0	0	0	0	0	0	0	0	0	0	0	0
06:45 AM	0	0	0	0	0	0	0	0	0	0	0	0	0	0	0	0	0	0	0	0	0
Total	0	0	0	0	0	0	0	0	0	0	0	0	0	0	0	0	0	0	0	0	0
07:00 AM	0	0	0	0	0	0	0	0	0	0	0	0	0	0	0	0	0	0	0	0	0
07:15 AM	0	0	0	0	0	0	0	0	0	0	0	0	0	0	0	0	0	0	0	0	0
07:30 AM	0	0	0	0	0	0	0	0	0	0	0	0	0	0	0	0	0	0	0	0	0
07:45 AM	0	0	0	0	0	0	0	0	0	0	0	0	0	0	0	0	0	0	0	0	0
Total	0	0	0	0	0	0	0	0	0	0	0	0	0	0	0	0	0	0	0	0	0
08:00 AM	0	0	0	0	0	0	0	0	0	0	0	0	0	0	0	0	0	0	0	0	0
08:15 AM	0	0	0	0	0	0	0	0	0	0	0	0	0	0	0	0	0	0	0	0	0
08:30 AM	0	0	0	0	0	0	0	0	0	0	0	0	0	0	0	0	0	0	0	0	0
08:45 AM	0	0	0	0	0	0	0	0	0	0	0	0	0	0	0	0	0	0	0	0	0
Total	0	0	0	0	0	0	0	0	0	0	0	0	0	0	0	0	0	0	0	0	0
09:00 AM	0	0	0	0	0	0	0	0	0	0	0	0	0	0	0	0	0	0	0	0	0
09:15 AM	0	0	0	0	0	0	0	0	0	0	0	0	0	0	0	0	0	0	0	0	0
09:30 AM	0	0	0	0	0	0	0	0	0	0	0	0	0	0	0	0	0	0	0	0	0
09:45 AM	0	0	0	0	0	0	0	0	0	0	0	0	0	0	0	0	0	0	0	0	0
Total	0	0	0	0	0	0	0	0	0	0	0	0	0	0	0	0	0	0	0	0	0
10:00 AM	0	0	0	0	0	0	0	0	0	0	0	0	0	0	0	0	0	0	0	0	0
10:15 AM	0	0	0	0	0	0	0	0	0	0	0	0	0	0	0	0	0	0	0	0	0
10:30 AM	0	0	0	0	0	0	0	0	0	0	0	0	0	0	0	0	0	0	0	0	0
10:45 AM	0	0	0	0	0	0	0	0	0	0	0	0	0	0	0	0	0	0	0	0	0
Total	0	0	0	0	0	0	0	0	0	0	0	0	0	0	0	0	0	0	0	0	0
11:00 AM	0	0	0	0	0	0	0	0	0	0	0	0	0	0	0	0	0	0	0	0	0
11:15 AM	0	0	0	0	0	0	0	0	0	0	0	0	0	0	0	0	0	0	0	0	0
11:30 AM	0	0	0	0	0	0	0	0	0	0	0	0	0	0	0	0	0	0	0	0	0
11:45 AM	0	0	0	0	0	0	0	0	0	0	0	0	0	0	0	0	0	0	0	0	0
Total	0	0	0	0	0	0	0	0	0	0	0	0	0	0	0	0	0	0	0	0	0
12:00 PM	0	0	0	0	0	0	0	0	0	0	0	0	0	0	0	0	0	0	0	0	0
12:15 PM	0	0	0	0	0	0	0	0	0	0	0	0	0	0	0	0	0	0	0	0	0
12:30 PM	0	0	0	0	0	0	0	0	0	0	0	0	0	0	0	0	0	0	0	0	0
12:45 PM	0	0	0	0	0	0	0	0	0	0	0	0	0	0	0	0	0	0	0	0	0
Total	0	0	0	0	0	0	0	0	0	0	0	0	0	0	0	0	0	0	0	0	0
01:00 PM	0	0	0	0	0	0	0	0	0	0	0	0	0	0	0	0	0	0	0	0	0
01:15 PM	0	0	0	0	0	0	0	0	0	0	0	0	0	0	0	0	0	0	0	0	0
01:30 PM	0	0	0	0	0	0	0	0	0	0	0	0	0	0	0	0	0	0	0	0	0
01:45 PM	0	0	0	0	0	0	0	0	0	0	0	0	0	0	0	0	0	0	0	0	0
Total	0	0	0	0	0	0	0	0	0	0	0	0	0	0	0	0	0	0	0	0	0
02:00 PM	0	0	0	0	0	0	0	0	0	0	0	0	0	0	0	0	0	0	0	0	0
02:15 PM	0	0	0	0	0	0	0	0	0	0	0	0	0	0	0	0	0	0	0	0	0
02:30 PM	0	0	0	0	0	0	0	0	0	0	0	0	0	0	0	0	0	0	0	0	0
02:45 PM	0	0	0	0	0	0	0	0	0	0	0	0	0	0	0	0	0	0	0	0	0
Total	0	0	0	0	0	0	0	0	0	0	0	0	0	0	0	0	0	0	0	0	0
03:00 PM	0	0	0	0	0	0	0	0	0	0	0	0	0	0	0	0	0	0	0	0	0
03:15 PM	0	0	0	0	0	0	0	0	0	0	0	0	0	0	0	0	0	0	0	0	0
03:30 PM	0	0	0	0	0	0	0	0	0	0	0	0	0	0	0	0	0	0	0	0	0

DocuSign Envelope ID: 5C03745C-4B01-4834-A65D-B77F558A4F46

Quality Counts

920 Blairhill Rd, Ste B-106
Charlotte, NC 28217

File Name : 15411712 - Brevard Rd -- Industrial Dr_Borg Warner Dr
Site Code : 15411712
Start Date : 4/20/2021

Groups Printed- Classes 11, 12, 13

	Brevard Rd Southbound					Borg Warner Dr Westbound					Brevard Rd Northbound					Industrial Dr Eastbound					
Start Time	Left	Thru	Right	U-Turn	App. Total	Left	Thru	Right	U-Turn	App. Total	Left	Thru	Right	U-Turn	App. Total	Left	Thru	Right	U-Turn	App. Total	Int. Total
03:45 PM	0	0	0	0	0	0	0	0	0	0	0	0	0	0	0	0	0	0	0	0	0
Total	0	0	0	0	0	0	0	0	0	0	0	0	0	0	0	0	0	0	0	0	0
04:00 PM	0	0	0	0	0	0	0	0	0	0	0	0	0	0	0	0	0	0	0	0	0
04:15 PM	0	0	0	0	0	0	0	0	0	0	0	0	0	0	0	0	0	0	0	0	0
04:30 PM	0	0	0	0	0	0	0	0	0	0	0	0	0	0	0	0	0	0	0	0	0
04:45 PM	0	0	0	0	0	0	0	0	0	0	0	0	0	0	0	0	0	0	0	0	0
Total	0	0	0	0	0	0	0	0	0	0	0	0	0	0	0	0	0	0	0	0	0
05:00 PM	0	0	0	0	0	0	0	0	0	0	0	0	0	0	0	0	0	0	0	0	0
05:15 PM	0	0	0	0	0	0	0	0	0	0	0	0	0	0	0	0	0	0	0	0	0
05:30 PM	0	0	0	0	0	0	0	0	0	0	0	0	0	0	0	0	0	0	0	0	0
05:45 PM	0	0	0	0	0	0	0	0	0	0	0	0	0	0	0	0	0	0	0	0	0
Total	0	0	0	0	0	0	0	0	0	0	0	0	0	0	0	0	0	0	0	0	0
06:00 PM	0	0	0	0	0	0	0	0	0	0	0	0	0	0	0	0	0	0	0	0	0
06:15 PM	0	0	0	0	0	0	0	0	0	0	0	0	0	0	0	0	0	0	0	0	0
06:30 PM	0	0	0	0	0	0	0	0	0	0	0	0	0	0	0	0	0	0	0	0	0
06:45 PM	0	0	0	0	0	0	0	0	0	0	0	0	0	0	0	0	0	0	0	0	0
Total	0	0	0	0	0	0	0	0	0	0	0	0	0	0	0	0	0	0	0	0	0
Grand Total	0	0	0	0	0	0	0	0	0	0	0	0	0	0	0	0	0	0	0	0	0
Apprch %	0	0	0	0		0	0	0	0		0	0	0	0		0	0	0	0		
Total %																					

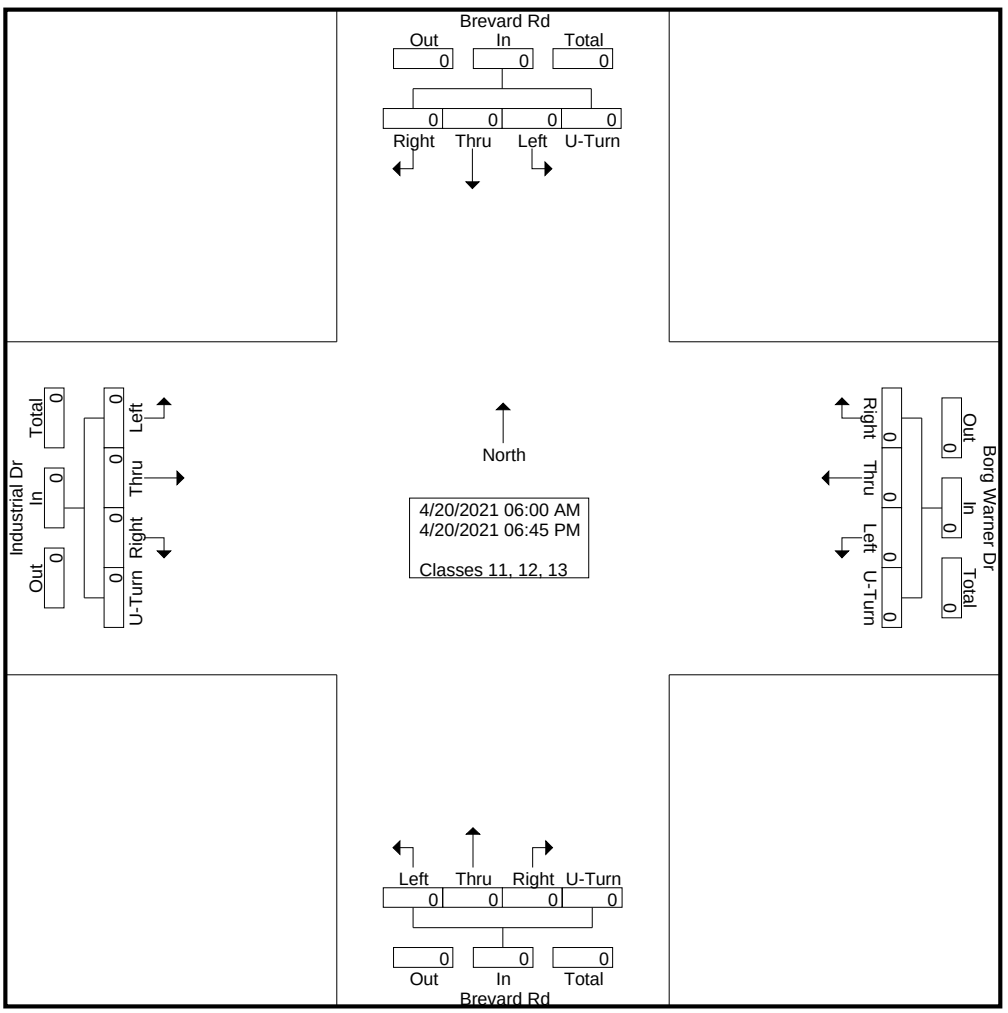

DocuSign Envelope ID: 5C03745C-4B01-4834-A65D-B77F558A4F46

Quality Counts

920 Blairhill Rd, Ste B-106
Charlotte, NC 28217

File Name : 15411712 - Brevard Rd -- Industrial Dr_Borg Warner Dr
Site Code : 15411712
Start Date : 4/20/2021

	Brevard Rd Southbound					Borg Warner Dr Westbound					Brevard Rd Northbound					Industrial Dr Eastbound					
Start Time	Left	Thru	Right	U-Turn	App. Total	Left	Thru	Right	U-Turn	App. Total	Left	Thru	Right	U-Turn	App. Total	Left	Thru	Right	U-Turn	App. Total	Int. Total
Peak Hour Analysis From 06:00 AM to 11:45 AM - Peak 1 of 1																					
Peak Hour for Entire Intersection Begins at 06:00 AM																					
06:00 AM	0	0	0	0	0	0	0	0	0	0	0	0	0	0	0	0	0	0	0	0	0
06:15 AM	0	0	0	0	0	0	0	0	0	0	0	0	0	0	0	0	0	0	0	0	0
06:30 AM	0	0	0	0	0	0	0	0	0	0	0	0	0	0	0	0	0	0	0	0	0
06:45 AM	0	0	0	0	0	0	0	0	0	0	0	0	0	0	0	0	0	0	0	0	0
Total Volume	0	0	0	0	0	0	0	0	0	0	0	0	0	0	0	0	0	0	0	0	0
% App. Total	0	0	0	0		0	0	0	0		0	0	0	0		0	0	0	0		
PHF	.000	.000	.000	.000	.000	.000	.000	.000	.000	.000	.000	.000	.000	.000	.000	.000	.000	.000	.000	.000	.000

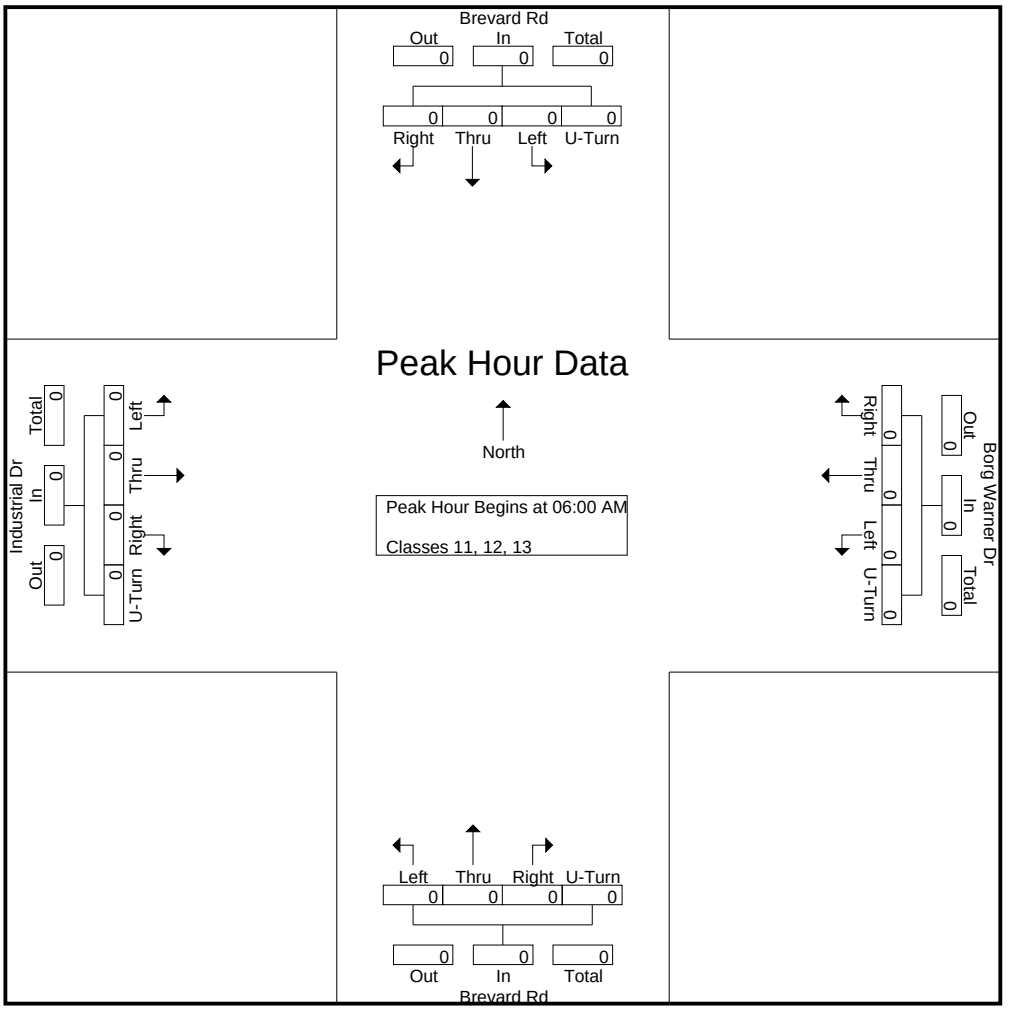

DocuSign Envelope ID: 5C03745C-4B01-4834-A65D-B77F558A4F46

Quality Counts

920 Blairhill Rd, Ste B-106
Charlotte, NC 28217

File Name : 15411712 - Brevard Rd -- Industrial Dr_Borg Warner Dr
Site Code : 15411712
Start Date : 4/20/2021
Page No : 4

	Brevard Rd Southbound					Borg Warner Dr Westbound					Brevard Rd Northbound					Industrial Dr Eastbound					
Start Time	Left	Thru	Right	U-Turn	App. Total	Left	Thru	Right	U-Turn	App. Total	Left	Thru	Right	U-Turn	App. Total	Left	Thru	Right	U-Turn	App. Total	Int. Total
Peak Hour Analysis From 12:00 PM to 06:45 PM - Peak 1 of 1																					
Peak Hour for Entire Intersection Begins at 12:00 PM																					
12:00 PM	0	0	0	0	0	0	0	0	0	0	0	0	0	0	0	0	0	0	0	0	0
12:15 PM	0	0	0	0	0	0	0	0	0	0	0	0	0	0	0	0	0	0	0	0	0
12:30 PM	0	0	0	0	0	0	0	0	0	0	0	0	0	0	0	0	0	0	0	0	0
12:45 PM	0	0	0	0	0	0	0	0	0	0	0	0	0	0	0	0	0	0	0	0	0
Total Volume	0	0	0	0	0	0	0	0	0	0	0	0	0	0	0	0	0	0	0	0	0
% App. Total	0	0	0	0		0	0	0	0		0	0	0	0		0	0	0	0		
PHF	.000	.000	.000	.000	.000	.000	.000	.000	.000	.000	.000	.000	.000	.000	.000	.000	.000	.000	.000	.000	.000

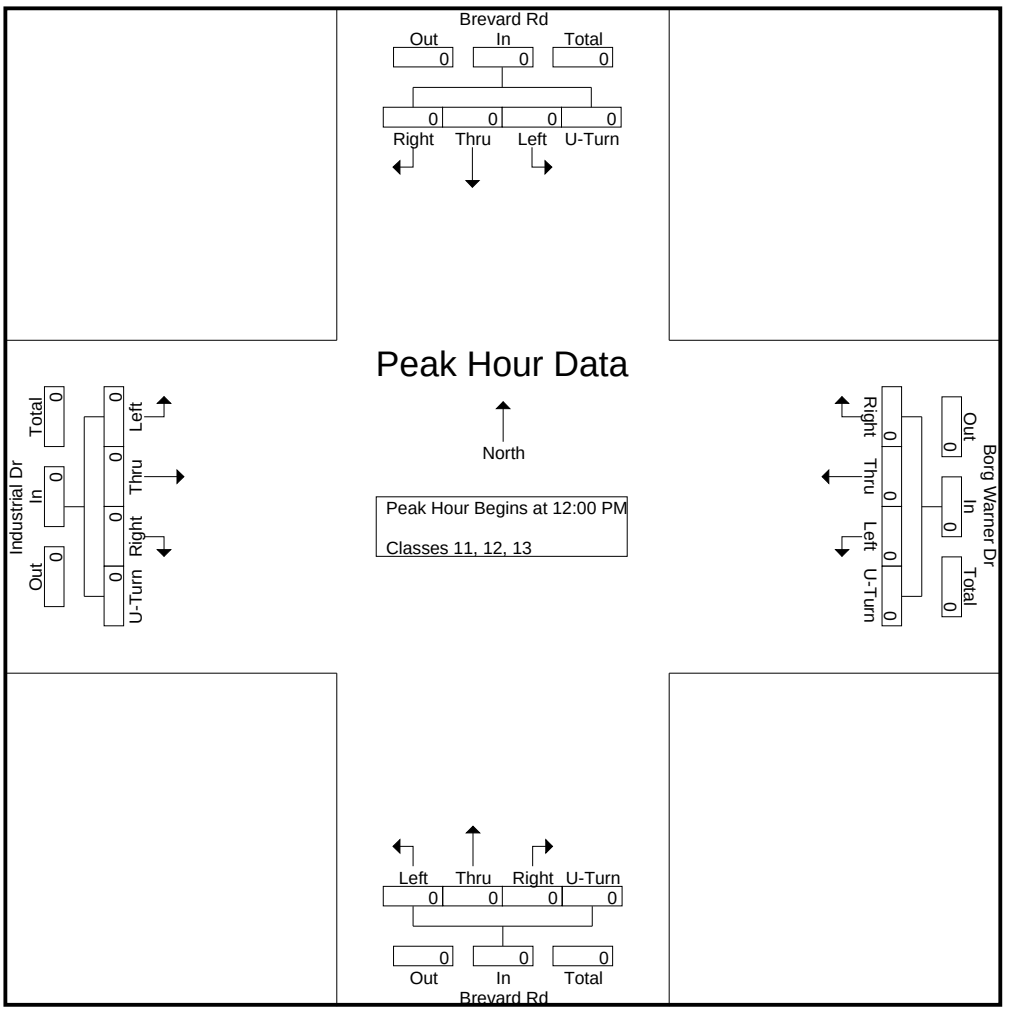

DocuSign Envelope ID: 5C03745C-4B01-4834-A65D-B77F558A4F46

Quality Counts

920 Blairhill Rd, Ste B-106
Charlotte, NC 28217

File Name : 15411712 - Brevard Rd -- Industrial Dr_Borg Warner Dr
Site Code : 15411712
Start Date : 4/20/2021
Page No : 1

Groups Printed- Bikes, Peds

	Brevard Rd Southbound					Borg Warner Dr Westbound					Brevard Rd Northbound					Industrial Dr Eastbound					
Start Time	Left	Thru	Right	Peds	App. Total	Left	Thru	Right	Peds	App. Total	Left	Thru	Right	Peds	App. Total	Left	Thru	Right	Peds	App. Total	Int. Total
06:00 AM	0	0	0	0	0	0	0	0	0	0	0	0	0	0	0	0	0	0	0	0	0
06:15 AM	0	1	0	0	1	0	0	0	0	0	0	0	0	0	0	0	0	0	0	0	1
06:30 AM	0	0	0	0	0	0	0	0	0	0	0	0	0	0	0	0	0	0	0	0	0
06:45 AM	0	1	0	0	1	0	0	0	0	0	0	0	0	0	0	0	0	0	0	0	1
Total	0	2	0	0	2	0	0	0	0	0	0	0	0	0	0	0	0	0	0	0	2
07:00 AM	0	0	0	0	0	0	0	0	0	0	0	0	0	0	0	0	0	0	0	0	0
07:15 AM	0	0	0	0	0	0	0	0	0	0	0	0	0	0	0	0	0	0	0	0	0
07:30 AM	0	0	0	0	0	0	0	0	0	0	0	0	0	0	0	0	0	0	0	0	0
07:45 AM	0	0	0	0	0	0	0	0	0	0	0	0	0	0	0	0	0	0	0	0	0
Total	0	0	0	0	0	0	0	0	0	0	0	0	0	0	0	0	0	0	0	0	0
08:00 AM	0	0	0	0	0	0	0	0	0	0	0	0	0	0	0	0	0	0	0	0	0
08:15 AM	0	0	0	0	0	0	0	0	0	0	0	0	0	0	0	0	0	0	0	0	0
08:30 AM	0	0	0	0	0	0	0	0	0	0	0	0	0	0	0	0	0	0	0	0	0
08:45 AM	0	0	0	0	0	0	0	0	0	0	0	0	0	0	0	0	0	0	0	0	0
Total	0	0	0	0	0	0	0	0	0	0	0	0	0	0	0	0	0	0	0	0	0
09:00 AM	0	0	0	0	0	0	0	0	0	0	0	0	0	0	0	0	0	0	0	0	0
09:15 AM	0	0	0	0	0	0	0	0	0	0	0	0	0	0	0	0	0	0	0	0	0
09:30 AM	0	0	0	0	0	0	0	0	0	0	0	0	0	0	0	0	0	0	0	0	0
09:45 AM	0	0	0	0	0	0	0	0	0	0	0	0	0	0	0	0	0	0	0	0	0
Total	0	0	0	0	0	0	0	0	0	0	0	0	0	0	0	0	0	0	0	0	0
10:00 AM	0	0	0	0	0	0	0	0	0	0	0	0	0	0	0	0	0	0	0	0	0
10:15 AM	0	0	0	0	0	0	0	0	0	0	0	0	0	0	0	0	0	0	0	0	0
10:30 AM	0	0	0	0	0	0	0	0	0	0	0	0	0	0	0	0	0	0	0	0	0
10:45 AM	0	0	0	0	0	0	0	0	0	0	0	0	0	0	0	0	0	0	0	0	0
Total	0	0	0	0	0	0	0	0	0	0	0	0	0	0	0	0	0	0	0	0	0
11:00 AM	0	0	0	0	0	0	0	0	0	0	0	0	0	0	0	0	0	0	0	0	0
11:15 AM	0	0	0	0	0	0	0	0	0	0	0	0	0	0	0	0	0	0	0	0	0
11:30 AM	0	0	0	0	0	0	0	0	0	0	0	0	0	0	0	0	0	0	0	0	0
11:45 AM	0	0	0	0	0	0	0	0	0	0	0	0	0	0	0	0	0	0	0	0	0
Total	0	0	0	0	0	0	0	0	0	0	0	0	0	0	0	0	0	0	0	0	0
12:00 PM	0	0	0	0	0	0	0	0	0	0	0	0	0	0	0	0	0	0	0	0	0
12:15 PM	0	0	0	0	0	0	0	0	0	0	0	0	0	0	0	0	0	0	0	0	0
12:30 PM	0	0	0	0	0	0	0	0	0	0	0	0	0	0	0	0	0	0	0	0	0
12:45 PM	0	0	0	0	0	0	0	0	0	0	0	0	0	0	0	0	0	0	0	0	0
Total	0	0	0	0	0	0	0	0	0	0	0	0	0	0	0	0	0	0	0	0	0
01:00 PM	0	0	0	0	0	0	0	0	0	0	0	0	0	0	0	0	0	0	0	0	0
01:15 PM	0	0	0	0	0	0	0	0	0	0	0	0	0	0	0	0	0	0	0	0	0
01:30 PM	0	0	0	0	0	0	0	0	0	0	0	1	0	0	1	0	0	0	0	0	1
01:45 PM	0	0	0	0	0	0	0	0	0	0	0	0	0	0	0	0	0	0	0	0	0
Total	0	0	0	0	0	0	0	0	0	0	0	1	0	0	1	0	0	0	0	0	1
02:00 PM	0	0	0	0	0	0	0	0	0	0	0	0	0	0	0	0	0	0	0	0	0
02:15 PM	0	0	0	0	0	0	0	0	0	0	0	0	0	0	0	0	0	0	0	0	0
02:30 PM	0	0	0	0	0	0	0	0	0	0	0	0	0	0	0	0	0	0	0	0	0
02:45 PM	0	0	0	0	0	0	0	0	0	0	0	0	0	0	0	0	0	0	0	0	0
Total	0	0	0	0	0	0	0	0	0	0	0	0	0	0	0	0	0	0	0	0	0
03:00 PM	0	0	0	0	0	0	0	0	0	0	0	0	0	0	0	0	0	0	0	0	0
03:15 PM	0	0	0	0	0	0	0	0	0	0	0	0	0	0	0	0	0	0	0	0	0
03:30 PM	0	0	0	0	0	0	0	0	0	0	0	0	0	0	0	0	0	0	0	0	0

DocuSign Envelope ID: 5C03745C-4B01-4834-A65D-B77F558A4F46

Quality Counts

920 Blairhill Rd, Ste B-106
Charlotte, NC 28217

File Name : 15411712 - Brevard Rd -- Industrial Dr_Borg Warner Dr
Site Code : 15411712
Start Date : 4/20/2021
Page No : 2

Groups Printed- Bikes, Peds

	Brevard Rd Southbound					Borg Warner Dr Westbound					Brevard Rd Northbound					Industrial Dr Eastbound					
Start Time	Left	Thru	Right	Peds	App. Total	Left	Thru	Right	Peds	App. Total	Left	Thru	Right	Peds	App. Total	Left	Thru	Right	Peds	App. Total	Int. Total
03:45 PM	0	0	0	0	0	0	0	0	1	1	0	0	0	0	0	0	0	0	0	0	1
Total	0	0	0	0	0	0	0	0	1	1	0	0	0	0	0	0	0	0	0	0	1
04:00 PM	0	0	0	0	0	0	0	0	0	0	0	0	0	0	0	0	0	0	0	0	0
04:15 PM	0	0	0	0	0	0	0	0	0	0	0	0	0	0	0	0	0	0	0	0	0
04:30 PM	0	0	0	0	0	0	0	0	0	0	0	0	0	0	0	0	0	0	0	0	0
04:45 PM	0	0	0	0	0	0	0	0	0	0	0	0	0	0	0	0	0	0	0	0	0
Total	0	0	0	0	0	0	0	0	0	0	0	0	0	0	0	0	0	0	0	0	0
05:00 PM	0	0	0	0	0	0	0	0	0	0	0	0	0	0	0	0	0	0	0	0	0
05:15 PM	0	0	0	0	0	0	0	0	0	0	0	1	0	0	1	0	0	0	0	0	1
05:30 PM	0	0	0	0	0	0	0	0	0	0	0	0	0	0	0	0	0	0	0	0	0
05:45 PM	0	0	0	0	0	0	0	0	0	0	0	0	0	0	0	0	0	0	0	0	0
Total	0	0	0	0	0	0	0	0	0	0	0	1	0	0	1	0	0	0	0	0	1
06:00 PM	0	0	0	0	0	0	0	0	0	0	0	0	0	0	0	0	0	0	0	0	0
06:15 PM	0	0	0	0	0	0	0	0	0	0	0	0	0	0	0	0	0	0	0	0	0
06:30 PM	0	0	0	0	0	0	0	0	0	0	0	0	0	0	0	0	0	0	2	2	2
06:45 PM	0	0	0	0	0	0	0	0	0	0	0	0	0	0	0	0	0	0	0	0	0
Total	0	0	0	0	0	0	0	0	0	0	0	0	0	0	0	0	0	0	2	2	2
Grand Total	0	2	0	0	2	0	0	0	1	1	0	2	0	0	2	0	0	0	2	2	7
Apprch %	0	100	0	0		0	0	0	100		0	100	0	0		0	0	0	100		
Total %	0	28.6	0	0	28.6	0	0	0	14.3	14.3	0	28.6	0	0	28.6	0	0	0	28.6	28.6	

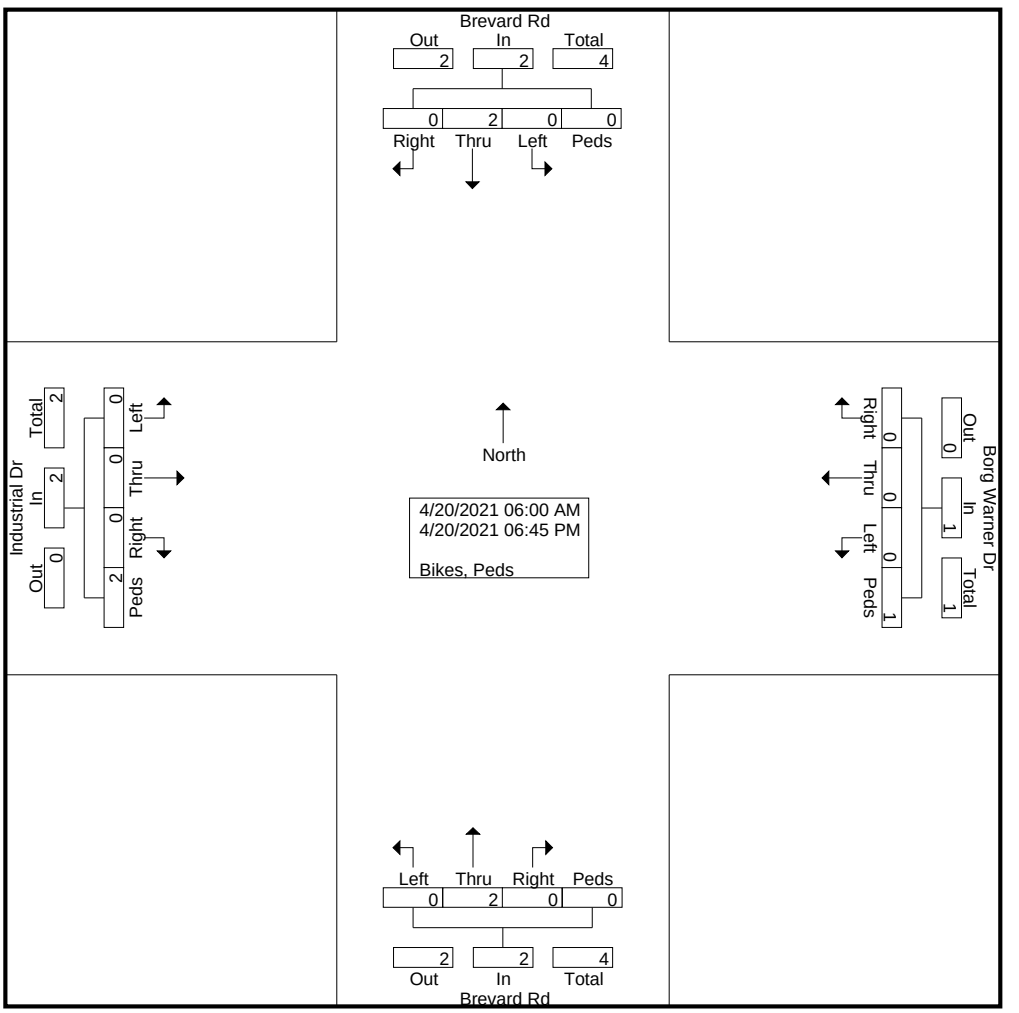

DocuSign Envelope ID: 5C03745C-4B01-4834-A65D-B77F558A4F46

Quality Counts

920 Blairhill Rd, Ste B-106
Charlotte, NC 28217

File Name : 15411712 - Brevard Rd -- Industrial Dr_Borg Warner Dr
Site Code : 15411712
Start Date : 4/20/2021
Page No : 3

	Brevard Rd Southbound					Borg Warner Dr Westbound					Brevard Rd Northbound					Industrial Dr Eastbound					
Start Time	Left	Thru	Right	Peds	App. Total	Left	Thru	Right	Peds	App. Total	Left	Thru	Right	Peds	App. Total	Left	Thru	Right	Peds	App. Total	Int. Total
Peak Hour Analysis From 06:00 AM to 11:45 AM - Peak 1 of 1																					
Peak Hour for Entire Intersection Begins at 06:00 AM																					
06:00 AM	0	0	0	0	0	0	0	0	0	0	0	0	0	0	0	0	0	0	0	0	0
06:15 AM	0	**1**	0	0	**1**	0	0	0	0	0	0	0	0	0	0	0	0	0	0	0	**1**
06:30 AM	0	0	0	0	0	0	0	0	0	0	0	0	0	0	0	0	0	0	0	0	0
06:45 AM	0	1	0	0	1	0	0	0	0	0	0	0	0	0	0	0	0	0	0	0	1
Total Volume	0	2	0	0	2	0	0	0	0	0	0	0	0	0	0	0	0	0	0	0	2
% App. Total	0	100	0	0		0	0	0	0		0	0	0	0		0	0	0	0		
PHF	.000	.500	.000	.000	.500	.000	.000	.000	.000	.000	.000	.000	.000	.000	.000	.000	.000	.000	.000	.000	.500

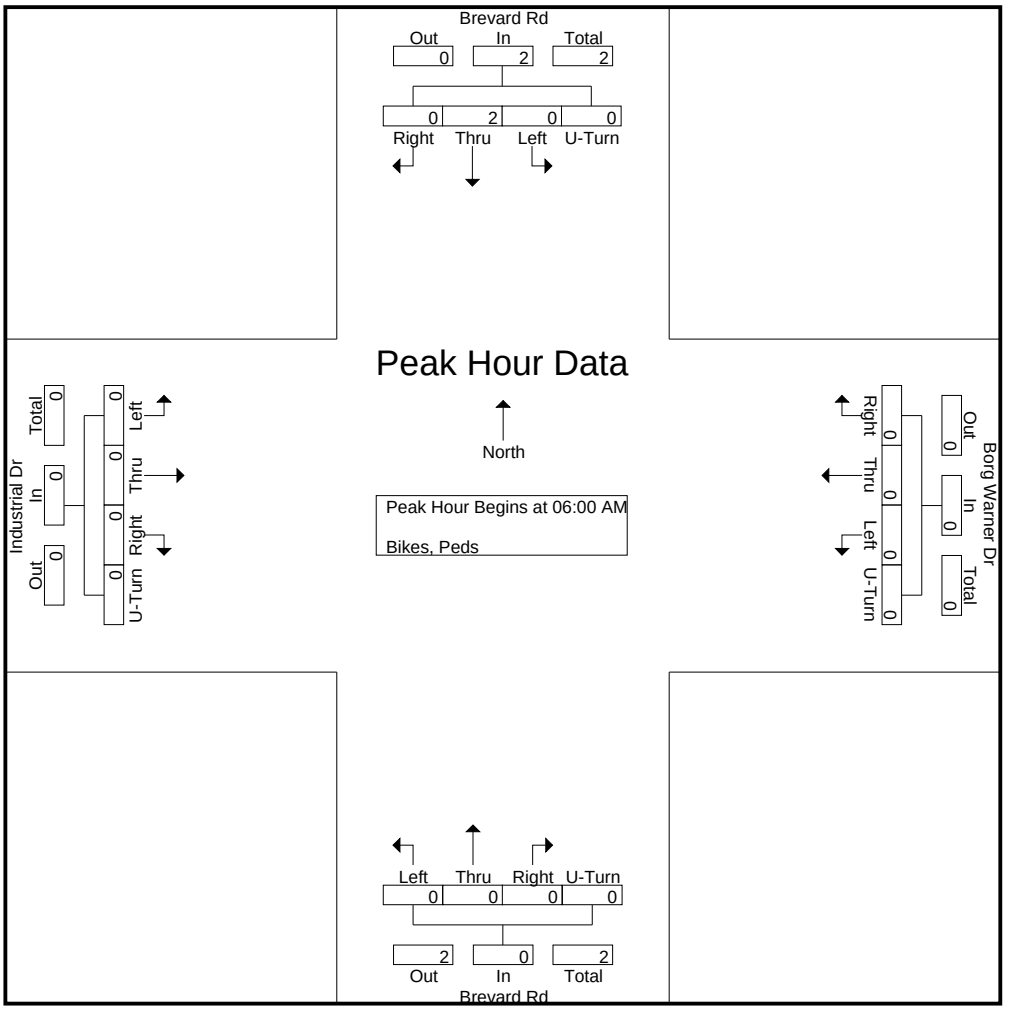

DocuSign Envelope ID: 5C03745C-4B01-4834-A65D-B77F558A4F46

Quality Counts

920 Blairhill Rd, Ste B-106
Charlotte, NC 28217

File Name : 15411712 - Brevard Rd -- Industrial Dr_Borg Warner Dr
Site Code : 15411712
Start Date : 4/20/2021
Page No : 4

	Brevard Rd Southbound					Borg Warner Dr Westbound					Brevard Rd Northbound					Industrial Dr Eastbound					
Start Time	Left	Thru	Right	Peds	App. Total	Left	Thru	Right	Peds	App. Total	Left	Thru	Right	Peds	App. Total	Left	Thru	Right	Peds	App. Total	Int. Total
Peak Hour Analysis From 12:00 PM to 06:45 PM - Peak 1 of 1																					
Peak Hour for Entire Intersection Begins at 05:45 PM																					
05:45 PM	0	0	0	0	0	0	0	0	0	0	0	0	0	0	0	0	0	0	0	0	0
06:00 PM	0	0	0	0	0	0	0	0	0	0	0	0	0	0	0	0	0	0	0	0	0
06:15 PM	0	0	0	0	0	0	0	0	0	0	0	0	0	0	0	0	0	0	0	0	0
06:30 PM	0	0	0	0	0	0	0	0	0	0	0	0	0	0	0	0	0	0	**2**	**2**	**2**
Total Volume	0	0	0	0	0	0	0	0	0	0	0	0	0	0	0	0	0	0	2	2	2
% App. Total	0	0	0	0		0	0	0	0		0	0	0	0		0	0	0	100		
PHF	.000	.000	.000	.000	.000	.000	.000	.000	.000	.000	.000	.000	.000	.000	.000	.000	.000	.000	.250	.250	.250

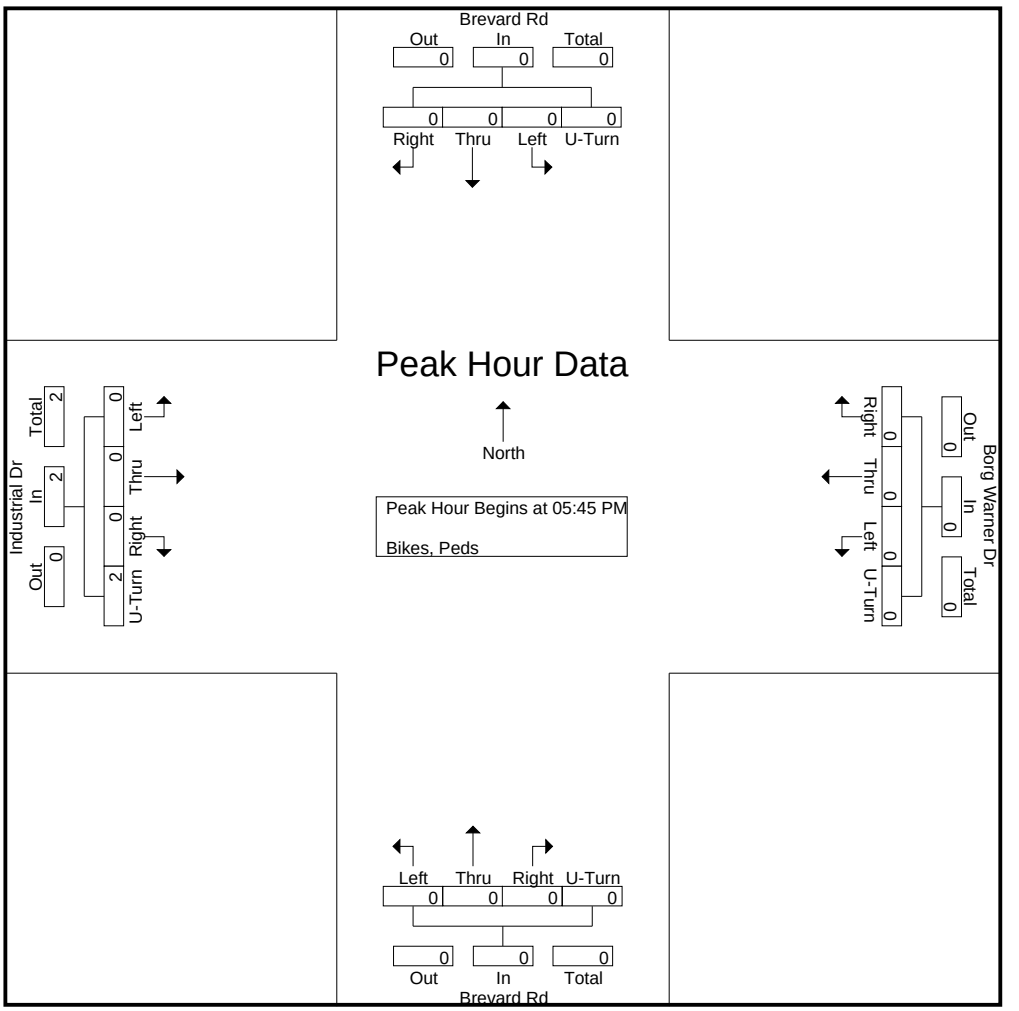

DocuSign Envelope ID: 5C03745C-4B01-4834-A65D-B77F558A4F46

QUALITY COUNTS LLC
920 Blairhill Rd, Suite 106, Charlotte, NC 28217
704.215.4616

Count Number: 15411713
County: Buncombe
City: Arden
Division: 13

Location: Brevard Rd & Commerce Way/Park S Blvd
General Location Type: Intersection
Count Type: Turning Movement (Classification)
Count Start Date: 4/20/2021
Time: 6:00 AM – 7:00 PM
Volume: 11,806

Maximum Temperature: 69° F
Minimum Temperature: 40° F
Precipitation: 0.00 in
Snowfall: 0.0 in
Average Sky Cover: 0.2
Weather Conditions: Clear

1. **School in Session:** Yes
2. **Pedestrians Counted**: Yes
3. **Disabled Pedestrians Present**: No
   Description and Approaches Used: N/A
4. **Counted By**: Austin Whitelaw
5. **Data Processor**: Jon B
6. **Signal Inventory**: N/A
7. **Data Collection Method**: Video/Count Board
8. **Equipment Operating Properly**: Yes
9. **Area Lighting Present**: Yes
10. **Nearest Roadway Stop Sign < 300 ft:** No
    If yes, list approaches: N/A
11. **Nearest Traffic Signal < 300 ft:** No
    If yes, list approaches: N/A
12. **At-Grade Railroad Crossing Present (<200 ft):** No
    If yes, list approaches & distance: N/A
13. **Other:**

↑ North

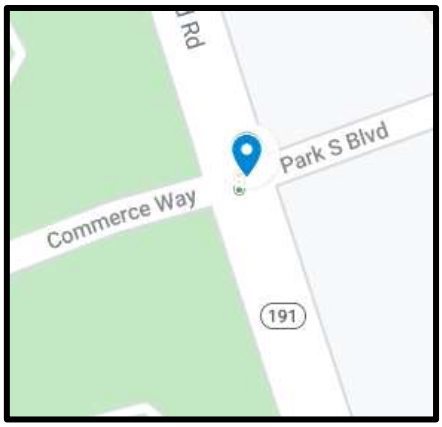

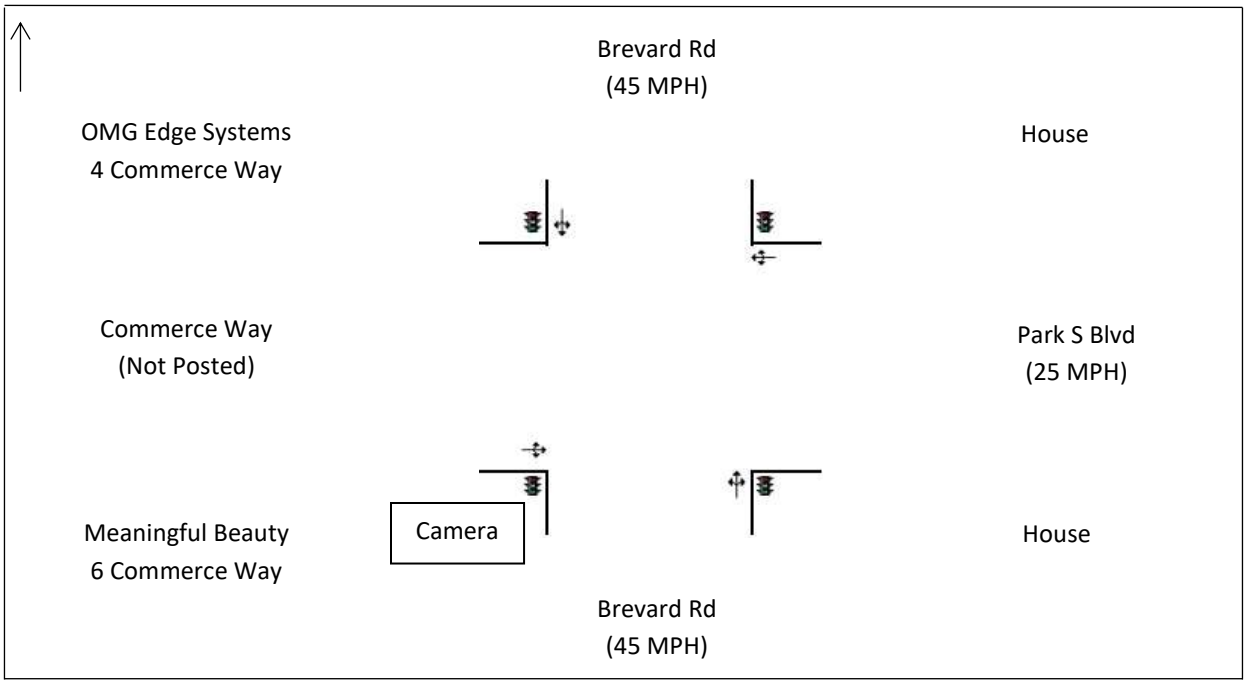

DocuSign Envelope ID: 5C03745C-4B01-4834-A65D-B77F558A4F46

Quality Counts

920 Blairhill Rd, Ste B-106
Charlotte, NC 28217

File Name : 15411713 - Brevard Rd -- Commerce Way_Park S Blvd
Site Code : 15411713
Start Date : 4/20/2021
Page No : 1

Groups Printed- Classes 1, 2, 3 - Classes 4, 5, 6, 7 - Classes 8, 9, 10 - Classes 11, 12, 13

	Brevard Rd Southbound					Park S Blvd Westbound					Brevard Rd Northbound					Commerce Way Eastbound					
Start Time	Left	Thru	Right	U-Turn	App. Total	Left	Thru	Right	U-Turn	App. Total	Left	Thru	Right	U-Turn	App. Total	Left	Thru	Right	U-Turn	App. Total	Int. Total
06:00 AM	0	37	4	0	41	1	0	1	0	2	2	18	0	0	20	0	0	0	0	0	63
06:15 AM	0	34	0	0	34	2	0	1	0	3	3	47	1	0	51	0	0	1	0	1	89
06:30 AM	2	62	3	0	67	1	0	4	0	5	1	76	8	0	85	0	0	0	0	0	157
06:45 AM	7	68	4	0	79	1	0	2	0	3	1	84	20	0	105	0	0	0	0	0	187
Total	9	201	11	0	221	5	0	8	0	13	7	225	29	0	261	0	0	1	0	1	496
07:00 AM	11	87	6	0	104	6	0	2	0	8	0	87	27	0	114	0	0	1	0	1	227
07:15 AM	13	83	5	0	101	28	0	7	0	35	5	117	39	0	161	0	0	0	0	0	297
07:30 AM	13	97	5	0	115	55	0	17	0	72	2	78	97	0	177	2	0	0	0	2	366
07:45 AM	13	87	7	0	107	64	1	34	0	99	2	96	51	0	149	2	0	1	0	3	358
Total	50	354	23	0	427	153	1	60	0	214	9	378	214	0	601	4	0	2	0	6	1248
08:00 AM	4	95	4	0	103	29	0	9	0	38	4	126	9	0	139	1	0	2	0	3	283
08:15 AM	1	88	9	0	98	4	0	4	0	8	7	103	3	0	113	0	0	0	0	0	219
08:30 AM	1	81	7	0	89	7	0	4	0	11	6	103	6	0	115	2	0	0	0	2	217
08:45 AM	0	78	10	0	88	4	0	1	0	5	6	93	2	0	101	2	0	3	0	5	199
Total	6	342	30	0	378	44	0	18	0	62	23	425	20	0	468	5	0	5	0	10	918
09:00 AM	1	84	3	0	88	3	0	1	0	4	5	82	3	0	90	1	0	1	0	2	184
09:15 AM	1	75	1	0	77	3	0	1	0	4	3	74	2	0	79	1	0	3	0	4	164
09:30 AM	0	74	2	0	76	3	0	0	0	3	0	100	2	0	102	1	0	1	0	2	183
09:45 AM	1	64	0	0	65	4	0	0	0	4	2	78	3	0	83	1	0	2	0	3	155
Total	3	297	6	0	306	13	0	2	0	15	10	334	10	0	354	4	0	7	0	11	686
10:00 AM	1	64	1	0	66	1	0	1	0	2	4	99	1	0	104	1	0	2	0	3	175
10:15 AM	0	75	1	0	76	3	0	1	0	4	2	63	2	0	67	0	0	0	0	0	147
10:30 AM	2	73	1	0	76	1	0	0	0	1	2	90	5	0	97	1	0	4	0	5	179
10:45 AM	1	79	0	0	80	2	0	5	0	7	1	84	6	0	91	1	0	0	0	1	179
Total	4	291	3	0	298	7	0	7	0	14	9	336	14	0	359	3	0	6	0	9	680
11:00 AM	1	89	0	0	90	6	0	0	0	6	0	94	0	0	94	1	0	3	0	4	194
11:15 AM	1	75	0	1	77	3	0	0	0	3	2	77	2	0	81	1	0	5	0	6	167
11:30 AM	0	84	3	0	87	5	0	0	0	5	6	75	0	0	81	3	0	8	0	11	184
11:45 AM	1	88	3	0	92	2	0	2	0	4	5	103	5	0	113	1	0	5	0	6	215
Total	3	336	6	1	346	16	0	2	0	18	13	349	7	0	369	6	0	21	0	27	760
12:00 PM	2	83	1	0	86	2	0	2	0	4	4	96	5	0	105	4	1	2	0	7	202
12:15 PM	0	81	0	0	81	6	1	7	0	14	1	88	9	0	98	2	0	3	0	5	198
12:30 PM	3	92	0	0	95	4	0	4	0	8	2	117	3	0	122	5	0	1	0	6	231
12:45 PM	0	83	4	0	87	2	0	3	0	5	2	107	7	0	116	0	0	0	0	0	208
Total	5	339	5	0	349	14	1	16	0	31	9	408	24	0	441	11	1	6	0	18	839
01:00 PM	1	84	2	0	87	4	0	2	0	6	4	100	7	0	111	2	0	9	0	11	215
01:15 PM	2	85	1	0	88	4	0	1	0	5	5	113	5	0	123	0	0	2	0	2	218
01:30 PM	1	83	0	0	84	4	0	8	0	12	2	97	11	0	110	3	1	1	0	5	211
01:45 PM	3	87	2	0	92	4	0	2	0	6	2	92	26	0	120	1	0	1	0	2	220
Total	7	339	5	0	351	16	0	13	0	29	13	402	49	0	464	6	1	13	0	20	864
02:00 PM	4	90	1	0	95	0	1	0	0	1	0	99	26	0	125	2	0	3	0	5	226
02:15 PM	1	93	5	0	99	20	0	4	0	24	1	79	13	0	93	4	0	0	0	4	220
02:30 PM	7	110	1	0	118	57	0	15	0	72	1	139	26	0	166	16	0	14	0	30	386
02:45 PM	5	91	2	0	98	26	0	12	0	38	1	148	8	0	157	3	0	0	0	3	296
Total	17	384	9	0	410	103	1	31	0	135	3	465	73	0	541	25	0	17	0	42	1128
03:00 PM	2	115	1	0	118	8	0	9	0	17	3	110	5	0	118	39	0	52	0	91	344
03:15 PM	1	110	1	0	112	17	0	8	0	25	2	105	4	0	111	21	0	10	0	31	279
03:30 PM	2	105	1	0	108	9	0	7	0	16	1	118	7	0	126	2	0	3	0	5	255

DocuSign Envelope ID: 5C03745C-4B01-4834-A65D-B77F558A4F46

Quality Counts

920 Blairhill Rd, Ste B-106
Charlotte, NC 28217

File Name : 15411713 - Brevard Rd -- Commerce Way_Park S Blvd
Site Code : 15411713
Start Date : 4/20/2021
Page No : 2

Groups Printed- Classes 1, 2, 3 - Classes 4, 5, 6, 7 - Classes 8, 9, 10 - Classes 11, 12, 13

	Brevard Rd Southbound					Park S Blvd Westbound					Brevard Rd Northbound					Commerce Way Eastbound					
Start Time	Left	Thru	Right	U-Turn	App. Total	Left	Thru	Right	U-Turn	App. Total	Left	Thru	Right	U-Turn	App. Total	Left	Thru	Right	U-Turn	App. Total	Int. Total
03:45 PM	1	99	1	0	101	7	0	2	0	9	1	153	6	0	160	2	1	3	0	6	276
Total	6	429	4	0	439	41	0	26	0	67	7	486	22	0	515	64	1	68	0	133	1154
04:00 PM	1	116	0	0	117	9	0	4	0	13	3	121	7	0	131	3	0	6	0	9	270
04:15 PM	1	124	1	0	126	3	0	9	0	12	1	145	8	0	154	2	0	0	0	2	294
04:30 PM	4	127	0	0	131	6	0	2	0	8	1	152	4	0	157	7	0	5	0	12	308
04:45 PM	3	101	2	0	106	5	0	1	0	6	1	140	7	0	148	11	0	10	0	21	281
Total	9	468	3	0	480	23	0	16	0	39	6	558	26	0	590	23	0	21	0	44	1153
05:00 PM	1	97	1	0	99	7	0	3	0	10	0	143	8	0	151	15	0	7	0	22	282
05:15 PM	2	121	0	0	123	9	0	1	0	10	0	168	8	0	176	6	0	4	0	10	319
05:30 PM	5	106	2	0	113	2	0	4	0	6	1	151	9	0	161	5	0	2	0	7	287
05:45 PM	1	117	1	0	119	3	0	2	0	5	2	109	1	0	112	3	0	5	0	8	244
Total	9	441	4	0	454	21	0	10	0	31	3	571	26	0	600	29	0	18	0	47	1132
06:00 PM	2	104	0	0	106	1	0	2	0	3	1	110	3	0	114	4	0	2	0	6	229
06:15 PM	1	79	0	0	80	3	0	0	0	3	0	99	2	0	101	0	0	3	0	3	187
06:30 PM	3	73	0	0	76	3	0	2	0	5	1	74	3	0	78	0	0	0	0	0	159
06:45 PM	1	81	0	0	82	3	0	1	0	4	0	85	1	0	86	0	0	1	0	1	173
Total	7	337	0	0	344	10	0	5	0	15	2	368	9	0	379	4	0	6	0	10	748
Grand Total	135	4558	109	1	4803	466	3	214	0	683	114	5305	523	0	5942	184	3	191	0	378	11806
Apprch %	2.8	94.9	2.3	0		68.2	0.4	31.3	0		1.9	89.3	8.8	0		48.7	0.8	50.5	0		
Total %	1.1	38.6	0.9	0	40.7	3.9	0	1.8	0	5.8	1	44.9	4.4	0	50.3	1.6	0	1.6	0	3.2	
Classes 1, 2, 3	129	4269	96	1	4495	445	2	210	0	657	90	4894	502	0	5486	170	2	167	0	339	10977
% Classes 1, 2, 3	95.6	93.7	88.1	100	93.6	95.5	66.7	98.1	0	96.2	78.9	92.3	96	0	92.3	92.4	66.7	87.4	0	89.7	93
Classes 4, 5, 6, 7	6	228	7	0	241	20	1	3	0	24	9	336	20	0	365	6	1	10	0	17	647
% Classes 4, 5, 6, 7	4.4	5	6.4	0	5	4.3	33.3	1.4	0	3.5	7.9	6.3	3.8	0	6.1	3.3	33.3	5.2	0	4.5	5.5
Classes 8, 9, 10	0	61	6	0	67	1	0	1	0	2	15	75	1	0	91	8	0	14	0	22	182
% Classes 8, 9, 10	0	1.3	5.5	0	1.4	0.2	0	0.5	0	0.3	13.2	1.4	0.2	0	1.5	4.3	0	7.3	0	5.8	1.5
Classes 11, 12, 13	0	0	0	0	0	0	0	0	0	0	0	0	0	0	0	0	0	0	0	0	0
% Classes 11, 12, 13	0	0	0	0	0	0	0	0	0	0	0	0	0	0	0	0	0	0	0	0	0

DocuSign Envelope ID: 5C03745C-4B01-4834-A65D-B77F558A4F46

Quality Counts

920 Blairhill Rd, Ste B-106
Charlotte, NC 28217

File Name : 15411713 - Brevard Rd -- Commerce Way_Park S Blvd
Site Code : 15411713
Start Date : 4/20/2021

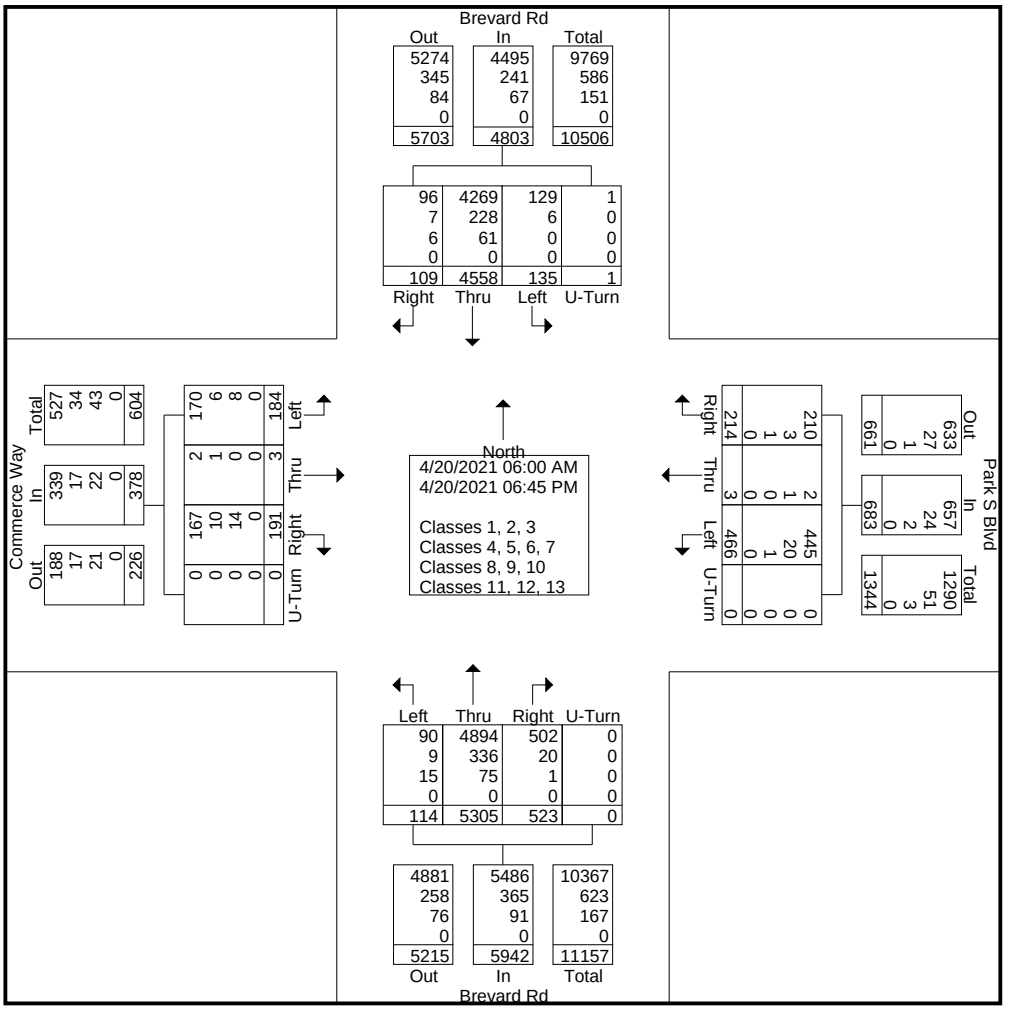

DocuSign Envelope ID: 5C03745C-4B01-4834-A65D-B77F558A4F46

Quality Counts

920 Blairhill Rd, Ste B-106
Charlotte, NC 28217

File Name : 15411713 - Brevard Rd -- Commerce Way_Park S Blvd
Site Code : 15411713
Start Date : 4/20/2021
Page No : 4

	Brevard Rd Southbound					Park S Blvd Westbound					Brevard Rd Northbound					Commerce Way Eastbound					
Start Time	Left	Thru	Right	U-Turn	App. Total	Left	Thru	Right	U-Turn	App. Total	Left	Thru	Right	U-Turn	App. Total	Left	Thru	Right	U-Turn	App. Total	Int. Total
Peak Hour Analysis From 06:00 AM to 11:45 AM - Peak 1 of 1																					
Peak Hour for Entire Intersection Begins at 07:15 AM																					
07:15 AM	**13**	83	5	0	101	28	0	7	0	35	**5**	117	39	0	161	0	0	0	0	0	297
07:30 AM	13	**97**	5	0	**115**	55	0	17	0	72	2	78	**97**	0	**177**	**2**	0	0	0	2	**366**
07:45 AM	13	87	**7**	0	107	**64**	**1**	**34**	0	**99**	2	96	51	0	149	2	0	1	0	**3**	358
08:00 AM	4	95	4	0	103	29	0	9	0	38	4	**126**	9	0	139	1	0	**2**	0	3	283
Total Volume	43	362	21	0	426	176	1	67	0	244	13	417	196	0	626	5	0	3	0	8	1304
% App. Total	10.1	85	4.9	0		72.1	0.4	27.5	0		2.1	66.6	31.3	0		62.5	0	37.5	0		
PHF	.827	.933	.750	.000	.926	.688	.250	.493	.000	.616	.650	.827	.505	.000	.884	.625	.000	.375	.000	.667	.891

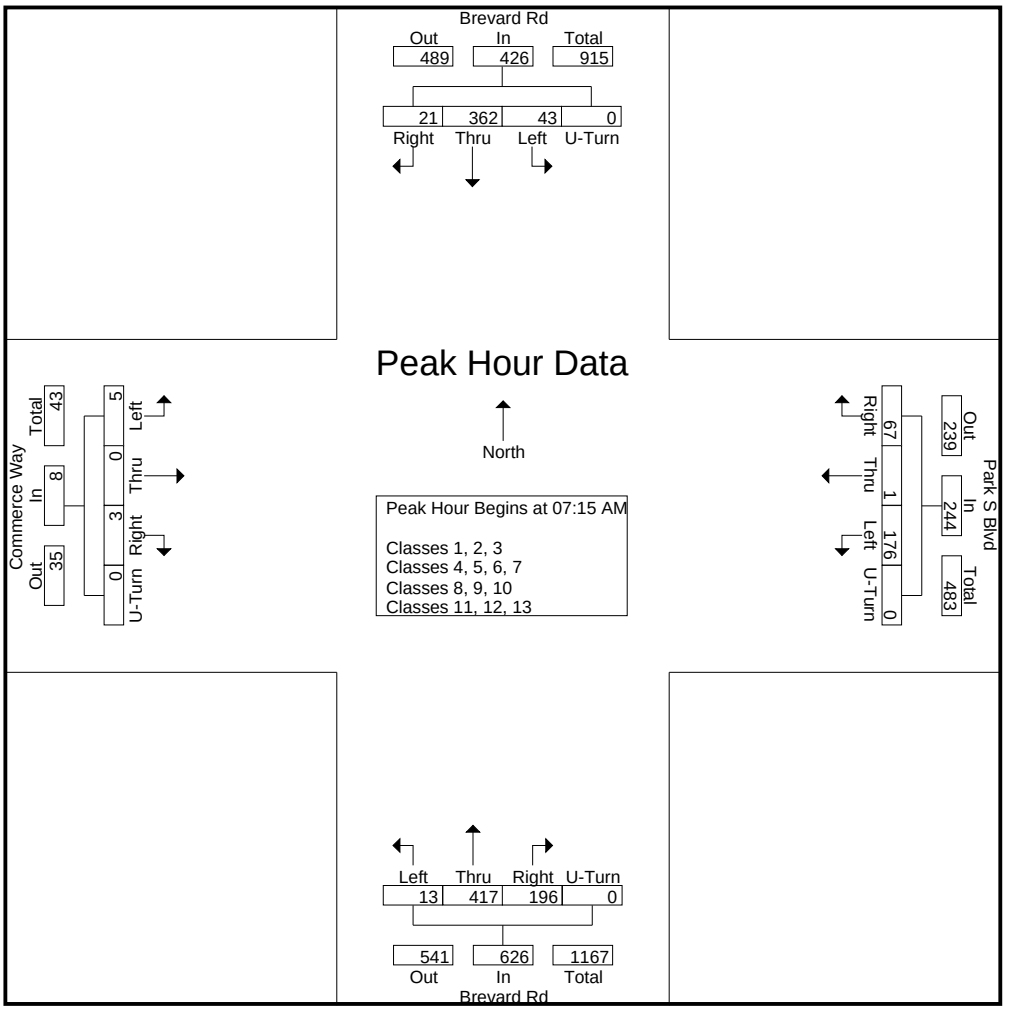

DocuSign Envelope ID: 5C03745C-4B01-4834-A65D-B77F558A4F46

Quality Counts

920 Blairhill Rd, Ste B-106
Charlotte, NC 28217

File Name : 15411713 - Brevard Rd -- Commerce Way_Park S Blvd
Site Code : 15411713
Start Date : 4/20/2021

	Brevard Rd Southbound					Park S Blvd Westbound					Brevard Rd Northbound					Commerce Way Eastbound					
Start Time	Left	Thru	Right	U-Turn	App. Total	Left	Thru	Right	U-Turn	App. Total	Left	Thru	Right	U-Turn	App. Total	Left	Thru	Right	U-Turn	App. Total	Int. Total
Peak Hour Analysis From 12:00 PM to 06:45 PM - Peak 1 of 1																					
Peak Hour for Entire Intersection Begins at 02:30 PM																					
02:30 PM	**7**	110	1	0	**118**	**57**	0	**15**	0	**72**	1	139	**26**	0	**166**	16	0	14	0	30	**386**
02:45 PM	5	91	**2**	0	98	26	0	12	0	38	1	**148**	8	0	157	3	0	0	0	3	296
03:00 PM	2	**115**	1	0	118	8	0	9	0	17	**3**	110	5	0	118	**39**	0	**52**	0	**91**	344
03:15 PM	1	110	1	0	112	17	0	8	0	25	2	105	4	0	111	21	0	10	0	31	279
Total Volume	15	426	5	0	446	108	0	44	0	152	7	502	43	0	552	79	0	76	0	155	1305
% App. Total	3.4	95.5	1.1	0		71.1	0	28.9	0		1.3	90.9	7.8	0		51	0	49	0		
PHF	.536	.926	.625	.000	.945	.474	.000	.733	.000	.528	.583	.848	.413	.000	.831	.506	.000	.365	.000	.426	.845

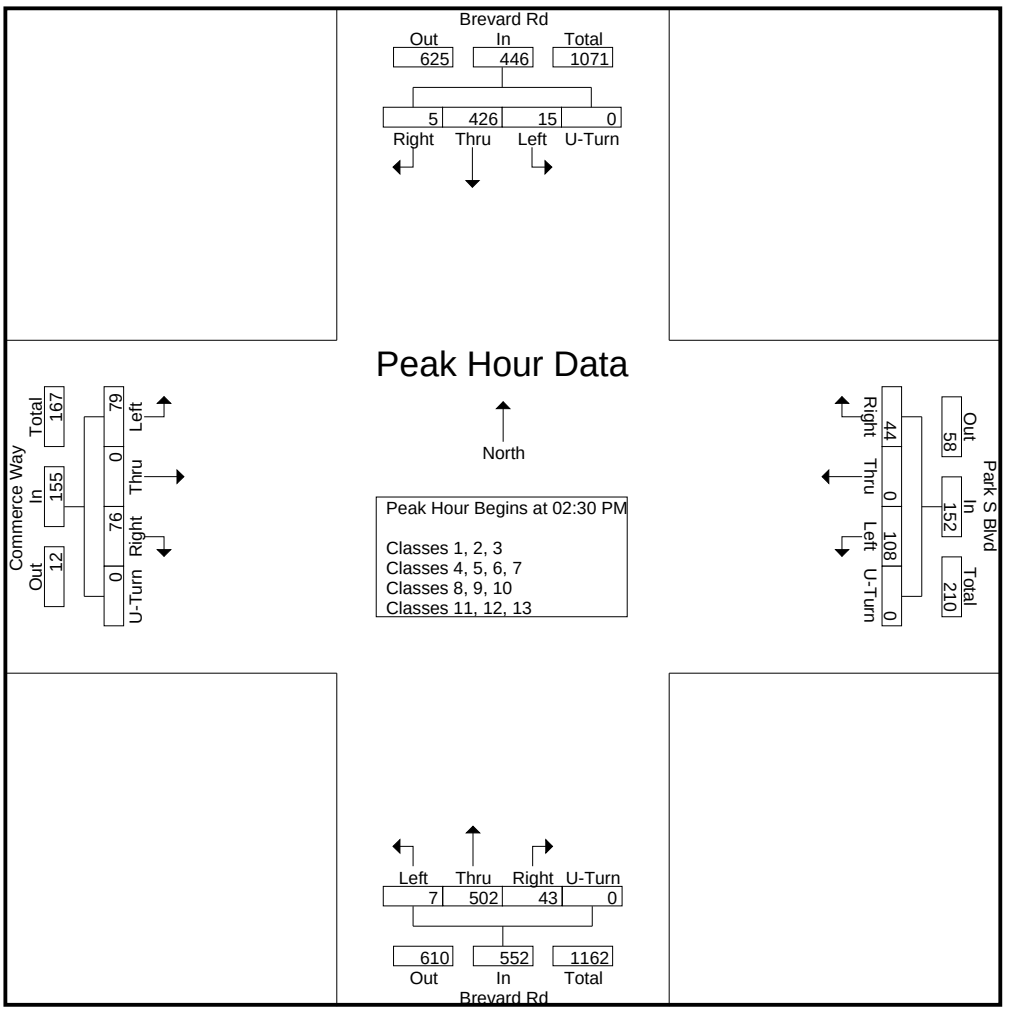

DocuSign Envelope ID: 5C03745C-4B01-4834-A65D-B77F558A4F46

Quality Counts

920 Blairhill Rd, Ste B-106
Charlotte, NC 28217

File Name : 15411713 - Brevard Rd -- Commerce Way_Park S Blvd
Site Code : 15411713
Start Date : 4/20/2021
Page No : 1

Groups Printed- Classes 1, 2, 3

	Brevard Rd Southbound					Park S Blvd Westbound					Brevard Rd Northbound					Commerce Way Eastbound					
Start Time	Left	Thru	Right	U-Turn	App. Total	Left	Thru	Right	U-Turn	App. Total	Left	Thru	Right	U-Turn	App. Total	Left	Thru	Right	U-Turn	App. Total	Int. Total
06:00 AM	0	32	4	0	36	0	0	1	0	1	2	17	0	0	19	0	0	0	0	0	56
06:15 AM	0	32	0	0	32	0	0	1	0	1	3	46	1	0	50	0	0	1	0	1	84
06:30 AM	2	58	3	0	63	0	0	4	0	4	1	73	8	0	82	0	0	0	0	0	149
06:45 AM	7	64	4	0	75	1	0	2	0	3	1	80	17	0	98	0	0	0	0	0	176
Total	9	186	11	0	206	1	0	8	0	9	7	216	26	0	249	0	0	1	0	1	465
07:00 AM	11	82	6	0	99	3	0	2	0	5	0	83	25	0	108	0	0	1	0	1	213
07:15 AM	13	80	4	0	97	27	0	7	0	34	5	109	38	0	152	0	0	0	0	0	283
07:30 AM	10	88	5	0	103	55	0	17	0	72	2	75	96	0	173	2	0	0	0	2	350
07:45 AM	13	81	6	0	100	63	1	33	0	97	1	91	49	0	141	1	0	0	0	1	339
Total	47	331	21	0	399	148	1	59	0	208	8	358	208	0	574	3	0	1	0	4	1185
08:00 AM	4	90	4	0	98	29	0	9	0	38	4	118	9	0	131	0	0	2	0	2	269
08:15 AM	0	81	8	0	89	4	0	3	0	7	7	95	2	0	104	0	0	0	0	0	200
08:30 AM	1	76	7	0	84	7	0	4	0	11	6	97	6	0	109	1	0	0	0	1	205
08:45 AM	0	71	10	0	81	4	0	1	0	5	6	82	2	0	90	2	0	3	0	5	181
Total	5	318	29	0	352	44	0	17	0	61	23	392	19	0	434	3	0	5	0	8	855
09:00 AM	1	80	2	0	83	2	0	1	0	3	4	73	3	0	80	1	0	0	0	1	167
09:15 AM	1	63	0	0	64	3	0	1	0	4	2	70	2	0	74	0	0	2	0	2	144
09:30 AM	0	71	2	0	73	3	0	0	0	3	0	90	2	0	92	1	0	0	0	1	169
09:45 AM	1	57	0	0	58	4	0	0	0	4	1	72	3	0	76	1	0	2	0	3	141
Total	3	271	4	0	278	12	0	2	0	14	7	305	10	0	322	3	0	4	0	7	621
10:00 AM	1	60	1	0	62	1	0	1	0	2	3	83	1	0	87	1	0	1	0	2	153
10:15 AM	0	69	0	0	69	3	0	1	0	4	0	55	2	0	57	0	0	0	0	0	130
10:30 AM	1	63	1	0	65	1	0	0	0	1	1	80	5	0	86	1	0	0	0	1	153
10:45 AM	1	76	0	0	77	2	0	5	0	7	1	76	6	0	83	0	0	0	0	0	167
Total	3	268	2	0	273	7	0	7	0	14	5	294	14	0	313	2	0	1	0	3	603
11:00 AM	1	81	0	0	82	6	0	0	0	6	0	86	0	0	86	1	0	3	0	4	178
11:15 AM	1	65	0	1	67	3	0	0	0	3	1	68	2	0	71	1	0	5	0	6	147
11:30 AM	0	75	2	0	77	5	0	0	0	5	6	66	0	0	72	2	0	7	0	9	163
11:45 AM	1	84	3	0	88	1	0	2	0	3	4	93	5	0	102	1	0	4	0	5	198
Total	3	305	5	1	314	15	0	2	0	17	11	313	7	0	331	5	0	19	0	24	686
12:00 PM	2	77	0	0	79	2	0	2	0	4	3	84	5	0	92	3	0	2	0	5	180
12:15 PM	0	74	0	0	74	5	0	7	0	12	1	83	7	0	91	2	0	2	0	4	181
12:30 PM	3	85	0	0	88	4	0	4	0	8	2	109	3	0	114	4	0	1	0	5	215
12:45 PM	0	76	4	0	80	2	0	2	0	4	1	98	7	0	106	0	0	0	0	0	190
Total	5	312	4	0	321	13	0	15	0	28	7	374	22	0	403	9	0	5	0	14	766
01:00 PM	1	78	2	0	81	4	0	2	0	6	4	95	7	0	106	2	0	8	0	10	203
01:15 PM	2	78	1	0	81	4	0	1	0	5	4	106	5	0	115	0	0	2	0	2	203
01:30 PM	1	77	0	0	78	4	0	8	0	12	2	87	11	0	100	3	1	1	0	5	195
01:45 PM	3	83	2	0	88	4	0	2	0	6	2	85	26	0	113	1	0	1	0	2	209
Total	7	316	5	0	328	16	0	13	0	29	12	373	49	0	434	6	1	12	0	19	810
02:00 PM	4	84	1	0	89	0	1	0	0	1	0	92	25	0	117	2	0	2	0	4	211
02:15 PM	1	87	5	0	93	14	0	4	0	18	1	72	13	0	86	4	0	0	0	4	201
02:30 PM	7	104	0	0	111	57	0	15	0	72	1	123	26	0	150	15	0	14	0	29	362
02:45 PM	5	85	1	0	91	26	0	12	0	38	1	138	6	0	145	3	0	0	0	3	277
Total	17	360	7	0	384	97	1	31	0	129	3	425	70	0	498	24	0	16	0	40	1051
03:00 PM	2	112	1	0	115	7	0	8	0	15	2	95	3	0	100	38	0	52	0	90	320
03:15 PM	1	104	0	0	105	16	0	8	0	24	0	94	3	0	97	21	0	8	0	29	255
03:30 PM	2	96	1	0	99	8	0	7	0	15	0	105	6	0	111	1	0	2	0	3	228

DocuSign Envelope ID: 5C03745C-4B01-4834-A65D-B77F558A4F46

Quality Counts

920 Blairhill Rd, Ste B-106
Charlotte, NC 28217

File Name : 15411713 - Brevard Rd -- Commerce Way_Park S Blvd
Site Code : 15411713
Start Date : 4/20/2021

Groups Printed- Classes 1, 2, 3

	Brevard Rd Southbound					Park S Blvd Westbound					Brevard Rd Northbound					Commerce Way Eastbound					
Start Time	Left	Thru	Right	U-Turn	App. Total	Left	Thru	Right	U-Turn	App. Total	Left	Thru	Right	U-Turn	App. Total	Left	Thru	Right	U-Turn	App. Total	Int. Total
03:45 PM	0	91	0	0	91	7	0	2	0	9	0	141	5	0	146	0	1	2	0	3	249
Total	5	403	2	0	410	38	0	25	0	63	2	435	17	0	454	60	1	64	0	125	1052
04:00 PM	1	108	0	0	109	9	0	4	0	13	1	116	6	0	123	3	0	5	0	8	253
04:15 PM	1	119	0	0	120	3	0	9	0	12	1	131	8	0	140	2	0	0	0	2	274
04:30 PM	4	121	0	0	125	6	0	2	0	8	0	140	4	0	144	7	0	3	0	10	287
04:45 PM	3	99	2	0	104	5	0	1	0	6	1	132	7	0	140	10	0	10	0	20	270
Total	9	447	2	0	458	23	0	16	0	39	3	519	25	0	547	22	0	18	0	40	1084
05:00 PM	1	92	1	0	94	7	0	3	0	10	0	128	8	0	136	15	0	7	0	22	262
05:15 PM	2	116	0	0	118	9	0	1	0	10	0	159	8	0	167	6	0	3	0	9	304
05:30 PM	5	102	2	0	109	2	0	4	0	6	1	146	9	0	156	5	0	2	0	7	278
05:45 PM	1	113	1	0	115	3	0	2	0	5	0	103	1	0	104	3	0	5	0	8	232
Total	9	423	4	0	436	21	0	10	0	31	1	536	26	0	563	29	0	17	0	46	1076
06:00 PM	2	101	0	0	103	1	0	2	0	3	1	107	3	0	111	4	0	1	0	5	222
06:15 PM	1	78	0	0	79	3	0	0	0	3	0	97	2	0	99	0	0	2	0	2	183
06:30 PM	3	70	0	0	73	3	0	2	0	5	0	70	3	0	73	0	0	0	0	0	151
06:45 PM	1	80	0	0	81	3	0	1	0	4	0	80	1	0	81	0	0	1	0	1	167
Total	7	329	0	0	336	10	0	5	0	15	1	354	9	0	364	4	0	4	0	8	723
Grand Total	129	4269	96	1	4495	445	2	210	0	657	90	4894	502	0	5486	170	2	167	0	339	10977
Apprch %	2.9	95	2.1	0		67.7	0.3	32	0		1.6	89.2	9.2	0		50.1	0.6	49.3	0		
Total %	1.2	38.9	0.9	0	40.9	4.1	0	1.9	0	6	0.8	44.6	4.6	0	50	1.5	0	1.5	0	3.1	

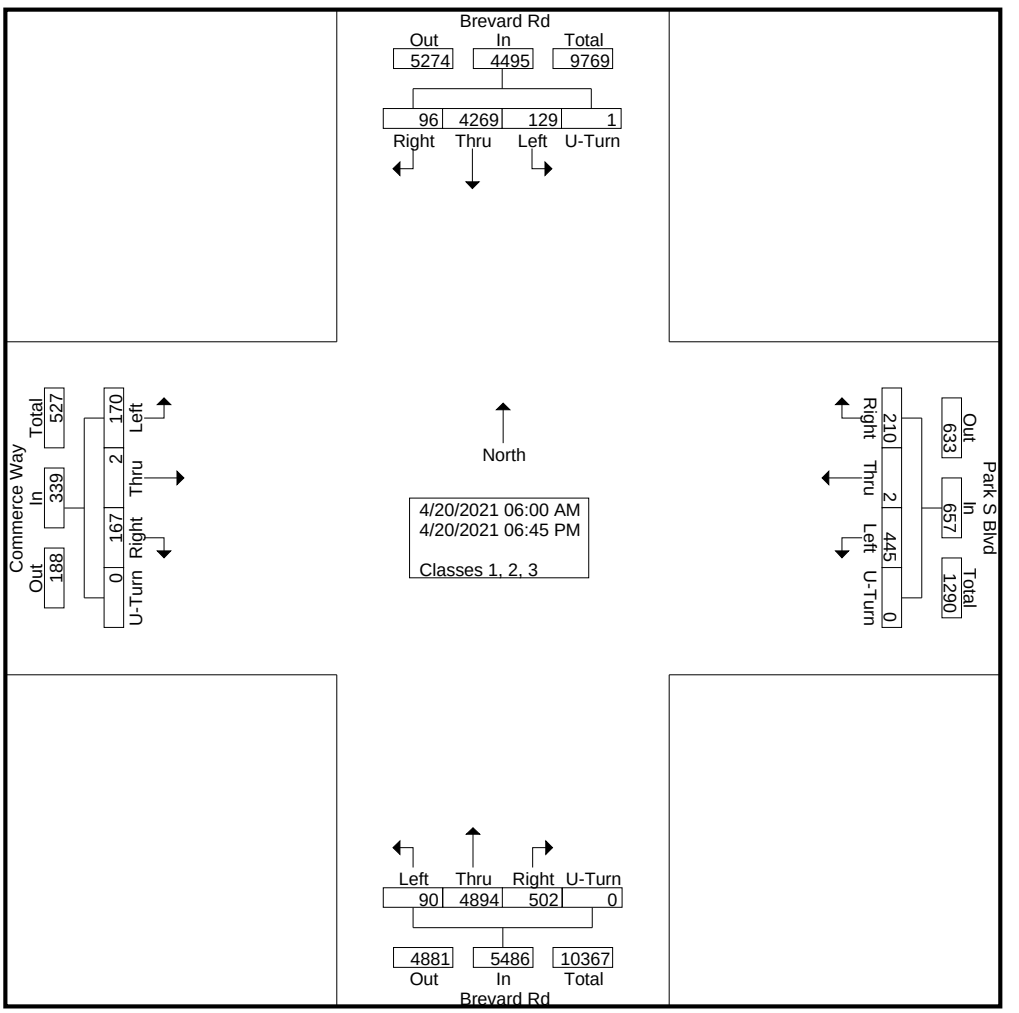

DocuSign Envelope ID: 5C03745C-4B01-4834-A65D-B77F558A4F46

Quality Counts

920 Blairhill Rd, Ste B-106
Charlotte, NC 28217

File Name : 15411713 - Brevard Rd -- Commerce Way_Park S Blvd
Site Code : 15411713
Start Date : 4/20/2021
Page No : 3

	Brevard Rd Southbound					Park S Blvd Westbound					Brevard Rd Northbound					Commerce Way Eastbound					
Start Time	Left	Thru	Right	U-Turn	App. Total	Left	Thru	Right	U-Turn	App. Total	Left	Thru	Right	U-Turn	App. Total	Left	Thru	Right	U-Turn	App. Total	Int. Total
Peak Hour Analysis From 06:00 AM to 11:45 AM - Peak 1 of 1																					
Peak Hour for Entire Intersection Begins at 07:15 AM																					
07:15 AM	**13**	80	4	0	97	27	0	7	0	34	**5**	109	38	0	152	0	0	0	0	0	283
07:30 AM	10	88	5	0	**103**	55	0	17	0	72	2	75	**96**	0	**173**	**2**	0	0	0	**2**	**350**
07:45 AM	13	81	**6**	0	100	**63**	**1**	**33**	0	**97**	1	91	49	0	141	1	0	0	0	1	339
08:00 AM	4	**90**	4	0	98	29	0	9	0	38	4	**118**	9	0	131	0	0	**2**	0	2	269
Total Volume	40	339	19	0	398	174	1	66	0	241	12	393	192	0	597	3	0	2	0	5	1241
% App. Total	10.1	85.2	4.8	0		72.2	0.4	27.4	0		2	65.8	32.2	0		60	0	40	0		
PHF	.769	.942	.792	.000	.966	.690	.250	.500	.000	.621	.600	.833	.500	.000	.863	.375	.000	.250	.000	.625	.886

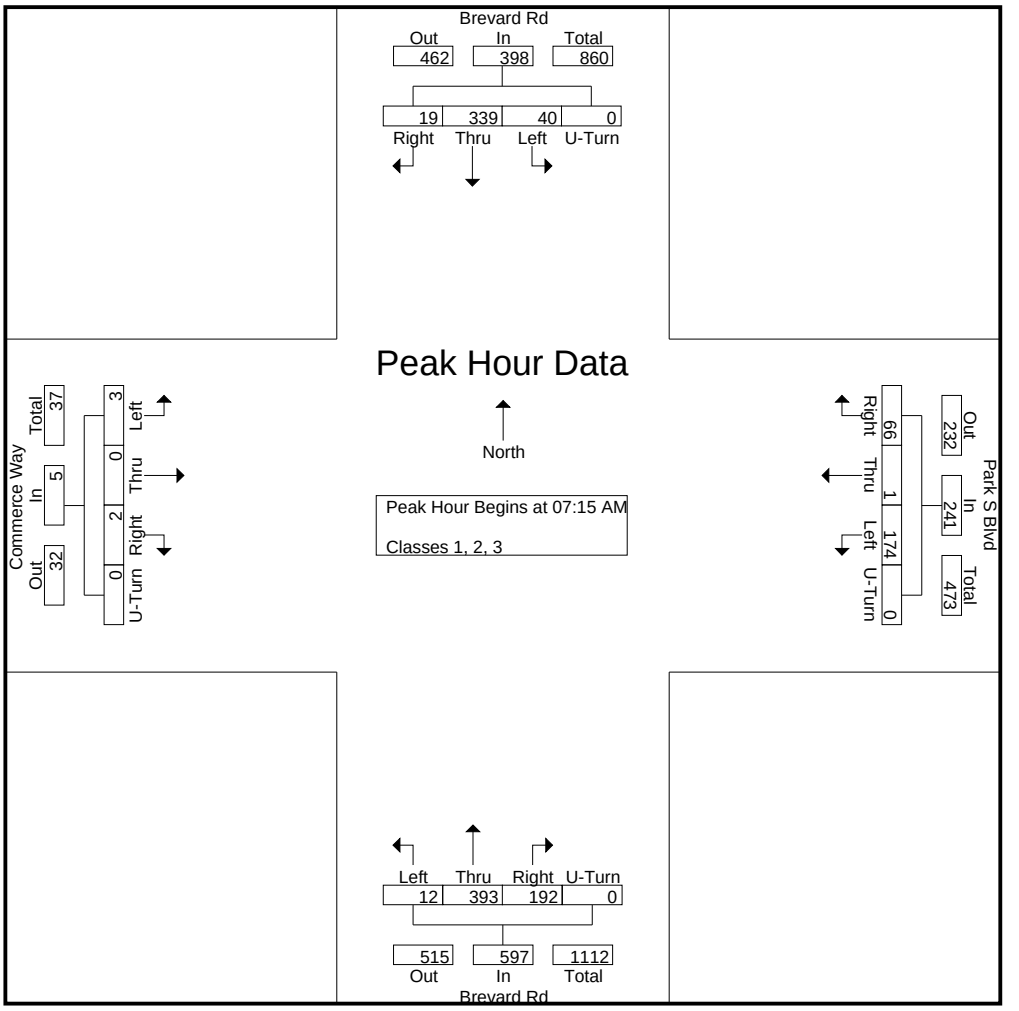

DocuSign Envelope ID: 5C03745C-4B01-4834-A65D-B77F558A4F46

Quality Counts

920 Blairhill Rd, Ste B-106
Charlotte, NC 28217

File Name : 15411713 - Brevard Rd -- Commerce Way_Park S Blvd
Site Code : 15411713
Start Date : 4/20/2021
Page No : 4

	Brevard Rd Southbound					Park S Blvd Westbound					Brevard Rd Northbound					Commerce Way Eastbound					
Start Time	Left	Thru	Right	U-Turn	App. Total	Left	Thru	Right	U-Turn	App. Total	Left	Thru	Right	U-Turn	App. Total	Left	Thru	Right	U-Turn	App. Total	Int. Total
Peak Hour Analysis From 12:00 PM to 06:45 PM - Peak 1 of 1																					
Peak Hour for Entire Intersection Begins at 02:30 PM																					
02:30 PM	**7**	104	0	0	111	**57**	0	**15**	0	**72**	1	123	**26**	0	**150**	15	0	14	0	29	**362**
02:45 PM	5	85	**1**	0	91	26	0	12	0	38	1	**138**	6	0	145	3	0	0	0	3	277
03:00 PM	2	**112**	1	0	**115**	7	0	8	0	15	**2**	95	3	0	100	**38**	0	**52**	0	**90**	320
03:15 PM	1	104	0	0	105	16	0	8	0	24	0	94	3	0	97	21	0	8	0	29	255
Total Volume	15	405	2	0	422	106	0	43	0	149	4	450	38	0	492	77	0	74	0	151	1214
% App. Total	3.6	96	0.5	0		71.1	0	28.9	0		0.8	91.5	7.7	0		51	0	49	0		
PHF	.536	.904	.500	.000	.917	.465	.000	.717	.000	.517	.500	.815	.365	.000	.820	.507	.000	.356	.000	.419	.838

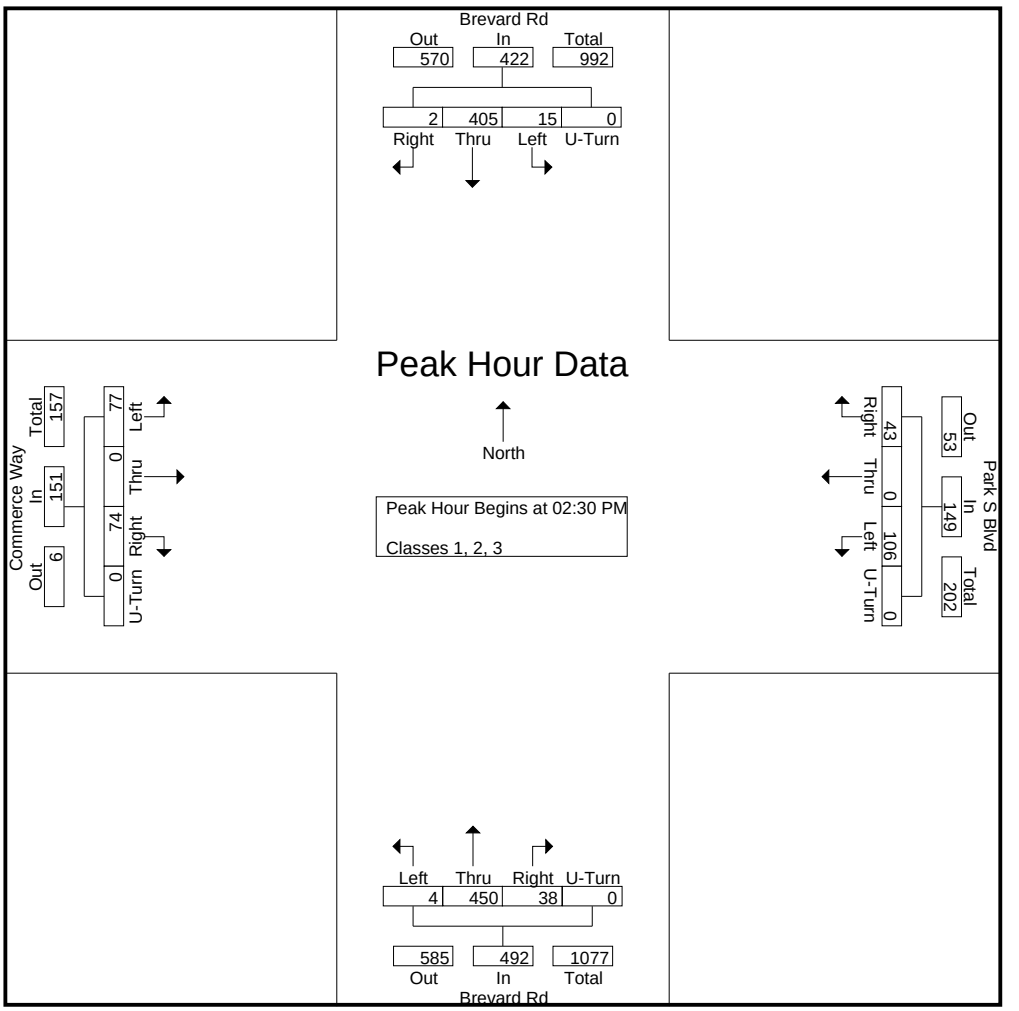

DocuSign Envelope ID: 5C03745C-4B01-4834-A65D-B77F558A4F46

Quality Counts

920 Blairhill Rd, Ste B-106
Charlotte, NC 28217

File Name : 15411713 - Brevard Rd -- Commerce Way_Park S Blvd
Site Code : 15411713
Start Date : 4/20/2021
Page No : 1

Groups Printed- Classes 4, 5, 6, 7

	Brevard Rd Southbound					Park S Blvd Westbound					Brevard Rd Northbound					Commerce Way Eastbound					
Start Time	Left	Thru	Right	U-Turn	App. Total	Left	Thru	Right	U-Turn	App. Total	Left	Thru	Right	U-Turn	App. Total	Left	Thru	Right	U-Turn	App. Total	Int. Total
06:00 AM	0	4	0	0	4	1	0	0	0	1	0	1	0	0	1	0	0	0	0	0	6
06:15 AM	0	1	0	0	1	2	0	0	0	2	0	1	0	0	1	0	0	0	0	0	4
06:30 AM	0	4	0	0	4	1	0	0	0	1	0	1	0	0	1	0	0	0	0	0	6
06:45 AM	0	4	0	0	4	0	0	0	0	0	0	3	2	0	5	0	0	0	0	0	9
Total	0	13	0	0	13	4	0	0	0	4	0	6	2	0	8	0	0	0	0	0	25
07:00 AM	0	5	0	0	5	3	0	0	0	3	0	1	2	0	3	0	0	0	0	0	11
07:15 AM	0	3	0	0	3	1	0	0	0	1	0	6	1	0	7	0	0	0	0	0	11
07:30 AM	3	7	0	0	10	0	0	0	0	0	0	3	1	0	4	0	0	0	0	0	14
07:45 AM	0	4	1	0	5	0	0	1	0	1	0	5	2	0	7	0	0	1	0	1	14
Total	3	19	1	0	23	4	0	1	0	5	0	15	6	0	21	0	0	1	0	1	50
08:00 AM	0	5	0	0	5	0	0	0	0	0	0	4	0	0	4	0	0	0	0	0	9
08:15 AM	1	6	1	0	8	0	0	1	0	1	0	6	1	0	7	0	0	0	0	0	16
08:30 AM	0	5	0	0	5	0	0	0	0	0	0	6	0	0	6	1	0	0	0	1	12
08:45 AM	0	4	0	0	4	0	0	0	0	0	0	9	0	0	9	0	0	0	0	0	13
Total	1	20	1	0	22	0	0	1	0	1	0	25	1	0	26	1	0	0	0	1	50
09:00 AM	0	3	0	0	3	1	0	0	0	1	0	6	0	0	6	0	0	0	0	0	10
09:15 AM	0	8	1	0	9	0	0	0	0	0	0	4	0	0	4	0	0	1	0	1	14
09:30 AM	0	2	0	0	2	0	0	0	0	0	0	9	0	0	9	0	0	0	0	0	11
09:45 AM	0	7	0	0	7	0	0	0	0	0	1	5	0	0	6	0	0	0	0	0	13
Total	0	20	1	0	21	1	0	0	0	1	1	24	0	0	25	0	0	1	0	1	48
10:00 AM	0	2	0	0	2	0	0	0	0	0	1	12	0	0	13	0	0	1	0	1	16
10:15 AM	0	6	0	0	6	0	0	0	0	0	1	6	0	0	7	0	0	0	0	0	13
10:30 AM	1	5	0	0	6	0	0	0	0	0	0	7	0	0	7	0	0	2	0	2	15
10:45 AM	0	3	0	0	3	0	0	0	0	0	0	8	0	0	8	0	0	0	0	0	11
Total	1	16	0	0	17	0	0	0	0	0	2	33	0	0	35	0	0	3	0	3	55
11:00 AM	0	4	0	0	4	0	0	0	0	0	0	8	0	0	8	0	0	0	0	0	12
11:15 AM	0	10	0	0	10	0	0	0	0	0	1	8	0	0	9	0	0	0	0	0	19
11:30 AM	0	8	1	0	9	0	0	0	0	0	0	9	0	0	9	1	0	1	0	2	20
11:45 AM	0	3	0	0	3	1	0	0	0	1	0	6	0	0	6	0	0	0	0	0	10
Total	0	25	1	0	26	1	0	0	0	1	1	31	0	0	32	1	0	1	0	2	61
12:00 PM	0	6	1	0	7	0	0	0	0	0	0	7	0	0	7	0	1	0	0	1	15
12:15 PM	0	5	0	0	5	1	1	0	0	2	0	5	2	0	7	0	0	0	0	0	14
12:30 PM	0	5	0	0	5	0	0	0	0	0	0	7	0	0	7	1	0	0	0	1	13
12:45 PM	0	6	0	0	6	0	0	0	0	0	1	7	0	0	8	0	0	0	0	0	14
Total	0	22	1	0	23	1	1	0	0	2	1	26	2	0	29	1	1	0	0	2	56
01:00 PM	0	6	0	0	6	0	0	0	0	0	0	5	0	0	5	0	0	1	0	1	12
01:15 PM	0	6	0	0	6	0	0	0	0	0	0	6	0	0	6	0	0	0	0	0	12
01:30 PM	0	5	0	0	5	0	0	0	0	0	0	8	0	0	8	0	0	0	0	0	13
01:45 PM	0	3	0	0	3	0	0	0	0	0	0	6	0	0	6	0	0	0	0	0	9
Total	0	20	0	0	20	0	0	0	0	0	0	25	0	0	25	0	0	1	0	1	46
02:00 PM	0	3	0	0	3	0	0	0	0	0	0	5	1	0	6	0	0	0	0	0	9
02:15 PM	0	6	0	0	6	6	0	0	0	6	0	6	0	0	6	0	0	0	0	0	18
02:30 PM	0	3	1	0	4	0	0	0	0	0	0	12	0	0	12	1	0	0	0	1	17
02:45 PM	0	4	0	0	4	0	0	0	0	0	0	7	2	0	9	0	0	0	0	0	13
Total	0	16	1	0	17	6	0	0	0	6	0	30	3	0	33	1	0	0	0	1	57
03:00 PM	0	2	0	0	2	1	0	1	0	2	0	14	2	0	16	0	0	0	0	0	20
03:15 PM	0	5	0	0	5	1	0	0	0	1	1	9	1	0	11	0	0	0	0	0	17
03:30 PM	0	6	0	0	6	1	0	0	0	1	1	11	1	0	13	0	0	1	0	1	21

DocuSign Envelope ID: 5C03745C-4B01-4834-A65D-B77F558A4F46

Quality Counts

920 Blairhill Rd, Ste B-106
Charlotte, NC 28217

File Name : 15411713 - Brevard Rd -- Commerce Way_Park S Blvd
Site Code : 15411713
Start Date : 4/20/2021

Groups Printed- Classes 4, 5, 6, 7

	Brevard Rd Southbound					Park S Blvd Westbound					Brevard Rd Northbound					Commerce Way Eastbound					
Start Time	Left	Thru	Right	U-Turn	App. Total	Left	Thru	Right	U-Turn	App. Total	Left	Thru	Right	U-Turn	App. Total	Left	Thru	Right	U-Turn	App. Total	Int. Total
03:45 PM	1	7	0	0	8	0	0	0	0	0	1	11	1	0	13	2	0	0	0	2	23
Total	1	20	0	0	21	3	0	1	0	4	3	45	5	0	53	2	0	1	0	3	81
04:00 PM	0	6	0	0	6	0	0	0	0	0	0	4	1	0	5	0	0	0	0	0	11
04:15 PM	0	4	1	0	5	0	0	0	0	0	0	11	0	0	11	0	0	0	0	0	16
04:30 PM	0	5	0	0	5	0	0	0	0	0	0	12	0	0	12	0	0	1	0	1	18
04:45 PM	0	2	0	0	2	0	0	0	0	0	0	6	0	0	6	0	0	0	0	0	8
Total	0	17	1	0	18	0	0	0	0	0	0	33	1	0	34	0	0	1	0	1	53
05:00 PM	0	4	0	0	4	0	0	0	0	0	0	14	0	0	14	0	0	0	0	0	18
05:15 PM	0	4	0	0	4	0	0	0	0	0	0	8	0	0	8	0	0	0	0	0	12
05:30 PM	0	3	0	0	3	0	0	0	0	0	0	4	0	0	4	0	0	0	0	0	7
05:45 PM	0	3	0	0	3	0	0	0	0	0	1	4	0	0	5	0	0	0	0	0	8
Total	0	14	0	0	14	0	0	0	0	0	1	30	0	0	31	0	0	0	0	0	45
06:00 PM	0	2	0	0	2	0	0	0	0	0	0	2	0	0	2	0	0	1	0	1	5
06:15 PM	0	1	0	0	1	0	0	0	0	0	0	2	0	0	2	0	0	0	0	0	3
06:30 PM	0	3	0	0	3	0	0	0	0	0	0	4	0	0	4	0	0	0	0	0	7
06:45 PM	0	0	0	0	0	0	0	0	0	0	0	5	0	0	5	0	0	0	0	0	5
Total	0	6	0	0	6	0	0	0	0	0	0	13	0	0	13	0	0	1	0	1	20
Grand Total	6	228	7	0	241	20	1	3	0	24	9	336	20	0	365	6	1	10	0	17	647
Apprch %	2.5	94.6	2.9	0		83.3	4.2	12.5	0		2.5	92.1	5.5	0		35.3	5.9	58.8	0		
Total %	0.9	35.2	1.1	0	37.2	3.1	0.2	0.5	0	3.7	1.4	51.9	3.1	0	56.4	0.9	0.2	1.5	0	2.6	

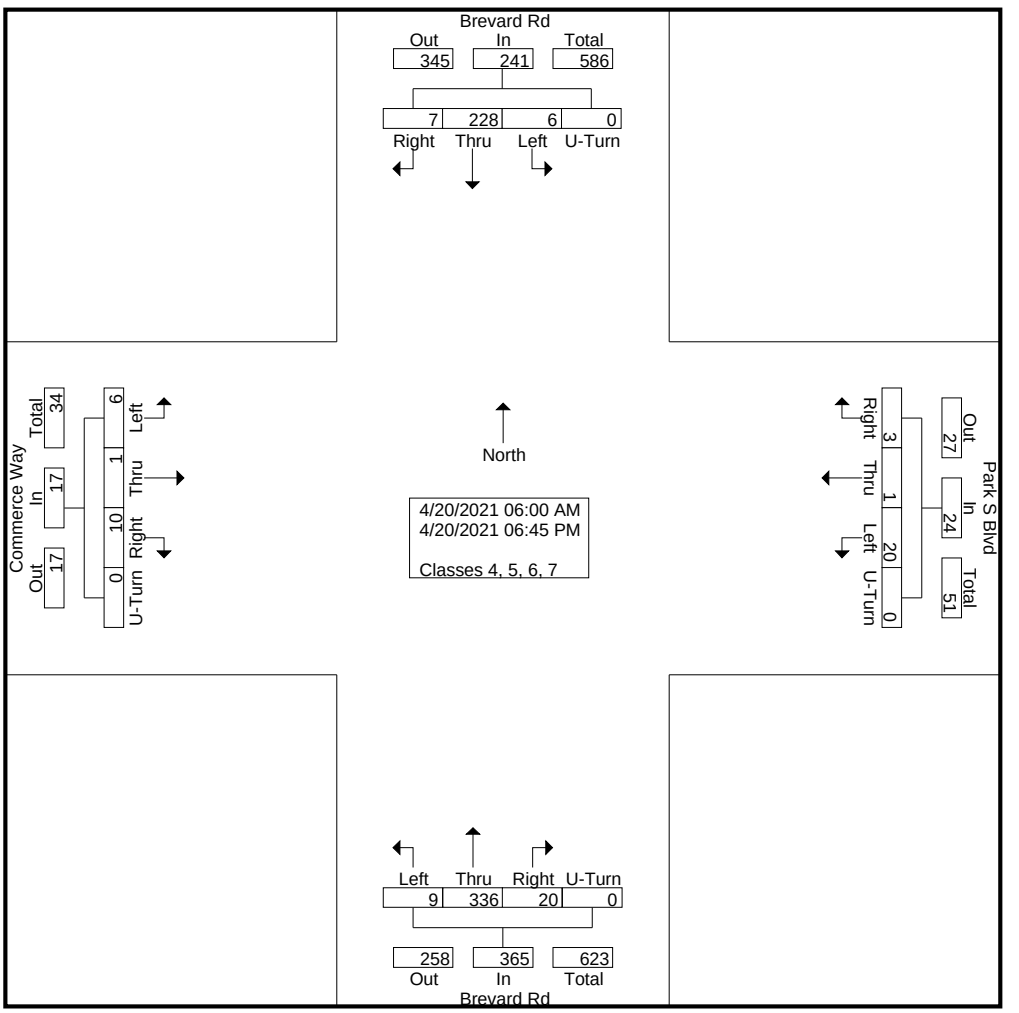

DocuSign Envelope ID: 5C03745C-4B01-4834-A65D-B77F558A4F46

Quality Counts

920 Blairhill Rd, Ste B-106
Charlotte, NC 28217

File Name : 15411713 - Brevard Rd -- Commerce Way_Park S Blvd
Site Code : 15411713
Start Date : 4/20/2021
Page No : 3

	Brevard Rd Southbound					Park S Blvd Westbound					Brevard Rd Northbound					Commerce Way Eastbound					
Start Time	Left	Thru	Right	U-Turn	App. Total	Left	Thru	Right	U-Turn	App. Total	Left	Thru	Right	U-Turn	App. Total	Left	Thru	Right	U-Turn	App. Total	Int. Total
Peak Hour Analysis From 06:00 AM to 11:45 AM - Peak 1 of 1																					
Peak Hour for Entire Intersection Begins at 10:45 AM																					
10:45 AM	0	3	0	0	3	0	0	0	0	0	0	8	0	0	8	0	0	0	0	0	11
11:00 AM	0	4	0	0	4	0	0	0	0	0	0	8	0	0	8	0	0	0	0	0	12
11:15 AM	0	**10**	0	0	**10**	0	0	0	0	0	**1**	8	0	0	**9**	0	0	0	0	0	19
11:30 AM	0	8	**1**	0	9	0	0	0	0	0	0	**9**	0	0	9	**1**	0	**1**	0	**2**	**20**
Total Volume	0	25	1	0	26	0	0	0	0	0	1	33	0	0	34	1	0	1	0	2	62
% App. Total	0	96.2	3.8	0		0	0	0	0		2.9	97.1	0	0		50	0	50	0		
PHF	.000	.625	.250	.000	.650	.000	.000	.000	.000	.000	.250	.917	.000	.000	.944	.250	.000	.250	.000	.250	.775

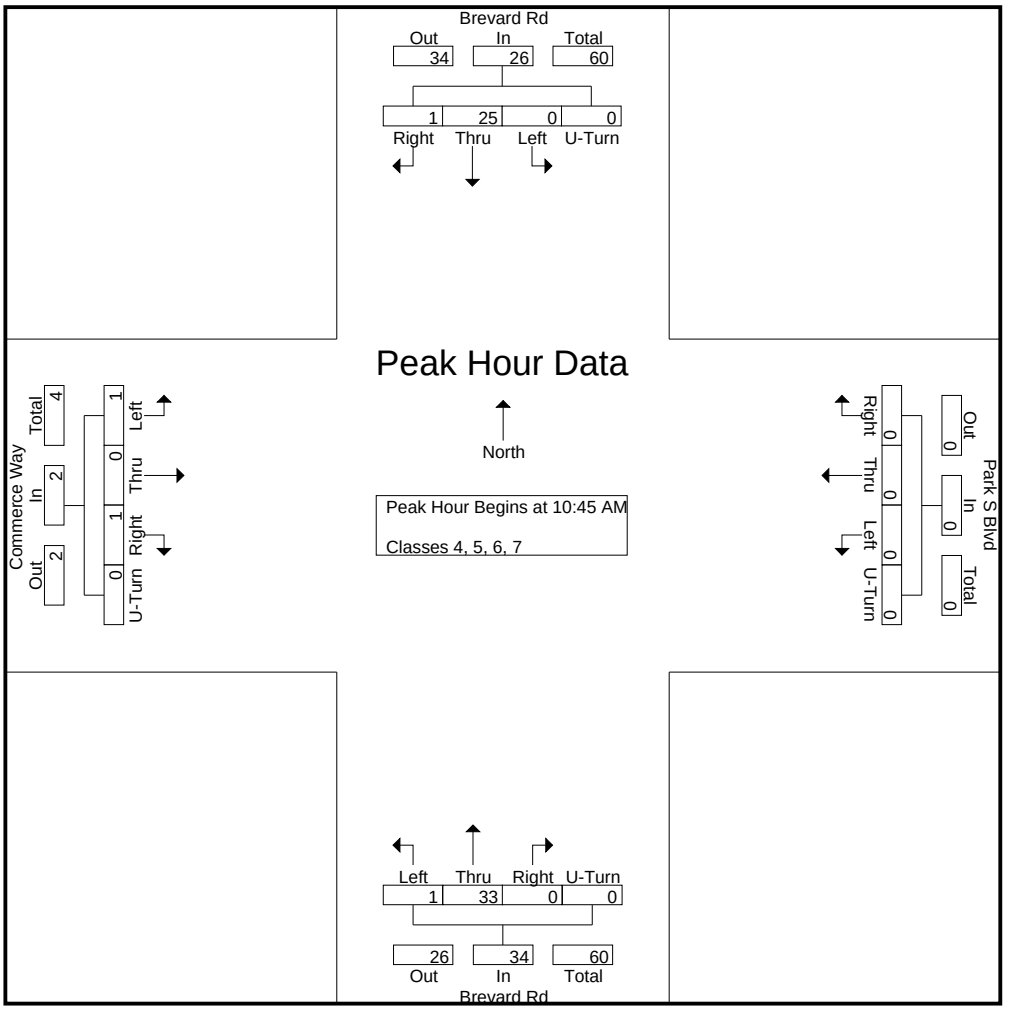

DocuSign Envelope ID: 5C03745C-4B01-4834-A65D-B77F558A4F46

Quality Counts

920 Blairhill Rd, Ste B-106
Charlotte, NC 28217

File Name : 15411713 - Brevard Rd -- Commerce Way_Park S Blvd
Site Code : 15411713
Start Date : 4/20/2021
Page No : 4

	Brevard Rd Southbound					Park S Blvd Westbound					Brevard Rd Northbound					Commerce Way Eastbound					
Start Time	Left	Thru	Right	U-Turn	App. Total	Left	Thru	Right	U-Turn	App. Total	Left	Thru	Right	U-Turn	App. Total	Left	Thru	Right	U-Turn	App. Total	Int. Total
Peak Hour Analysis From 12:00 PM to 06:45 PM - Peak 1 of 1																					
Peak Hour for Entire Intersection Begins at 03:00 PM																					
03:00 PM	0	2	0	0	2	**1**	0	**1**	0	**2**	0	**14**	**2**	0	**16**	0	0	0	0	0	20
03:15 PM	0	5	0	0	5	1	0	0	0	1	**1**	9	1	0	11	0	0	0	0	0	17
03:30 PM	0	6	0	0	6	1	0	0	0	1	1	11	1	0	13	0	0	**1**	0	1	21
03:45 PM	**1**	**7**	0	0	**8**	0	0	0	0	0	1	11	1	0	13	**2**	0	0	0	**2**	**23**
Total Volume	1	20	0	0	21	3	0	1	0	4	3	45	5	0	53	2	0	1	0	3	81
% App. Total	4.8	95.2	0	0		75	0	25	0		5.7	84.9	9.4	0		66.7	0	33.3	0		
PHF	.250	.714	.000	.000	.656	.750	.000	.250	.000	.500	.750	.804	.625	.000	.828	.250	.000	.250	.000	.375	.880

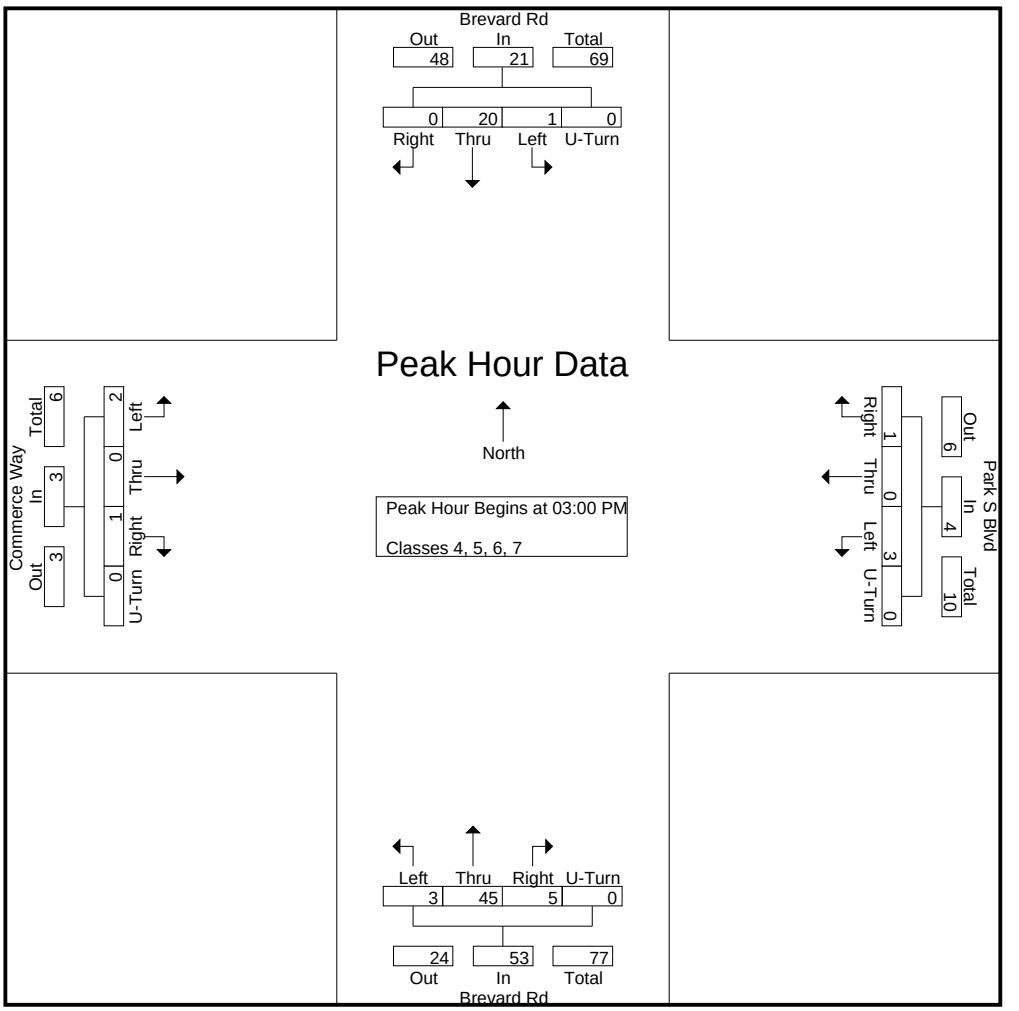

DocuSign Envelope ID: 5C03745C-4B01-4834-A65D-B77F558A4F46

Quality Counts

920 Blairhill Rd, Ste B-106
Charlotte, NC 28217

File Name : 15411713 - Brevard Rd -- Commerce Way_Park S Blvd
Site Code : 15411713
Start Date : 4/20/2021
Page No : 1

Groups Printed- Classes 8, 9, 10

	Brevard Rd Southbound					Park S Blvd Westbound					Brevard Rd Northbound					Commerce Way Eastbound					
Start Time	Left	Thru	Right	U-Turn	App. Total	Left	Thru	Right	U-Turn	App. Total	Left	Thru	Right	U-Turn	App. Total	Left	Thru	Right	U-Turn	App. Total	Int. Total
06:00 AM	0	1	0	0	1	0	0	0	0	0	0	0	0	0	0	0	0	0	0	0	1
06:15 AM	0	1	0	0	1	0	0	0	0	0	0	0	0	0	0	0	0	0	0	0	1
06:30 AM	0	0	0	0	0	0	0	0	0	0	0	2	0	0	2	0	0	0	0	0	2
06:45 AM	0	0	0	0	0	0	0	0	0	0	0	1	1	0	2	0	0	0	0	0	2
Total	0	2	0	0	2	0	0	0	0	0	0	3	1	0	4	0	0	0	0	0	6
07:00 AM	0	0	0	0	0	0	0	0	0	0	0	3	0	0	3	0	0	0	0	0	3
07:15 AM	0	0	1	0	1	0	0	0	0	0	0	2	0	0	2	0	0	0	0	0	3
07:30 AM	0	2	0	0	2	0	0	0	0	0	0	0	0	0	0	0	0	0	0	0	2
07:45 AM	0	2	0	0	2	1	0	0	0	1	1	0	0	0	1	1	0	0	0	1	5
Total	0	4	1	0	5	1	0	0	0	1	1	5	0	0	6	1	0	0	0	1	13
08:00 AM	0	0	0	0	0	0	0	0	0	0	0	4	0	0	4	1	0	0	0	1	5
08:15 AM	0	1	0	0	1	0	0	0	0	0	0	2	0	0	2	0	0	0	0	0	3
08:30 AM	0	0	0	0	0	0	0	0	0	0	0	0	0	0	0	0	0	0	0	0	0
08:45 AM	0	3	0	0	3	0	0	0	0	0	0	2	0	0	2	0	0	0	0	0	5
Total	0	4	0	0	4	0	0	0	0	0	0	8	0	0	8	1	0	0	0	1	13
09:00 AM	0	1	1	0	2	0	0	0	0	0	1	3	0	0	4	0	0	1	0	1	7
09:15 AM	0	4	0	0	4	0	0	0	0	0	1	0	0	0	1	1	0	0	0	1	6
09:30 AM	0	1	0	0	1	0	0	0	0	0	0	1	0	0	1	0	0	1	0	1	3
09:45 AM	0	0	0	0	0	0	0	0	0	0	0	1	0	0	1	0	0	0	0	0	1
Total	0	6	1	0	7	0	0	0	0	0	2	5	0	0	7	1	0	2	0	3	17
10:00 AM	0	2	0	0	2	0	0	0	0	0	0	4	0	0	4	0	0	0	0	0	6
10:15 AM	0	0	1	0	1	0	0	0	0	0	1	2	0	0	3	0	0	0	0	0	4
10:30 AM	0	5	0	0	5	0	0	0	0	0	1	3	0	0	4	0	0	2	0	2	11
10:45 AM	0	0	0	0	0	0	0	0	0	0	0	0	0	0	0	1	0	0	0	1	1
Total	0	7	1	0	8	0	0	0	0	0	2	9	0	0	11	1	0	2	0	3	22
11:00 AM	0	4	0	0	4	0	0	0	0	0	0	0	0	0	0	0	0	0	0	0	4
11:15 AM	0	0	0	0	0	0	0	0	0	0	0	1	0	0	1	0	0	0	0	0	1
11:30 AM	0	1	0	0	1	0	0	0	0	0	0	0	0	0	0	0	0	0	0	0	1
11:45 AM	0	1	0	0	1	0	0	0	0	0	1	4	0	0	5	0	0	1	0	1	7
Total	0	6	0	0	6	0	0	0	0	0	1	5	0	0	6	0	0	1	0	1	13
12:00 PM	0	0	0	0	0	0	0	0	0	0	1	5	0	0	6	1	0	0	0	1	7
12:15 PM	0	2	0	0	2	0	0	0	0	0	0	0	0	0	0	0	0	1	0	1	3
12:30 PM	0	2	0	0	2	0	0	0	0	0	0	1	0	0	1	0	0	0	0	0	3
12:45 PM	0	1	0	0	1	0	0	1	0	1	0	2	0	0	2	0	0	0	0	0	4
Total	0	5	0	0	5	0	0	1	0	1	1	8	0	0	9	1	0	1	0	2	17
01:00 PM	0	0	0	0	0	0	0	0	0	0	0	0	0	0	0	0	0	0	0	0	0
01:15 PM	0	1	0	0	1	0	0	0	0	0	1	1	0	0	2	0	0	0	0	0	3
01:30 PM	0	1	0	0	1	0	0	0	0	0	0	2	0	0	2	0	0	0	0	0	3
01:45 PM	0	1	0	0	1	0	0	0	0	0	0	1	0	0	1	0	0	0	0	0	2
Total	0	3	0	0	3	0	0	0	0	0	1	4	0	0	5	0	0	0	0	0	8
02:00 PM	0	3	0	0	3	0	0	0	0	0	0	2	0	0	2	0	0	1	0	1	6
02:15 PM	0	0	0	0	0	0	0	0	0	0	0	1	0	0	1	0	0	0	0	0	1
02:30 PM	0	3	0	0	3	0	0	0	0	0	0	4	0	0	4	0	0	0	0	0	7
02:45 PM	0	2	1	0	3	0	0	0	0	0	0	3	0	0	3	0	0	0	0	0	6
Total	0	8	1	0	9	0	0	0	0	0	0	10	0	0	10	0	0	1	0	1	20
03:00 PM	0	1	0	0	1	0	0	0	0	0	1	1	0	0	2	1	0	0	0	1	4
03:15 PM	0	1	1	0	2	0	0	0	0	0	1	2	0	0	3	0	0	2	0	2	7
03:30 PM	0	3	0	0	3	0	0	0	0	0	0	2	0	0	2	1	0	0	0	1	6

DocuSign Envelope ID: 5C03745C-4B01-4834-A65D-B77F558A4F46

Quality Counts

920 Blairhill Rd, Ste B-106
Charlotte, NC 28217

File Name : 15411713 - Brevard Rd -- Commerce Way_Park S Blvd
Site Code : 15411713
Start Date : 4/20/2021

Groups Printed- Classes 8, 9, 10

	Brevard Rd Southbound					Park S Blvd Westbound					Brevard Rd Northbound					Commerce Way Eastbound					
Start Time	Left	Thru	Right	U-Turn	App. Total	Left	Thru	Right	U-Turn	App. Total	Left	Thru	Right	U-Turn	App. Total	Left	Thru	Right	U-Turn	App. Total	Int. Total
03:45 PM	0	1	1	0	2	0	0	0	0	0	0	1	0	0	1	0	0	1	0	1	4
Total	0	6	2	0	8	0	0	0	0	0	2	6	0	0	8	2	0	3	0	5	21
04:00 PM	0	2	0	0	2	0	0	0	0	0	2	1	0	0	3	0	0	1	0	1	6
04:15 PM	0	1	0	0	1	0	0	0	0	0	0	3	0	0	3	0	0	0	0	0	4
04:30 PM	0	1	0	0	1	0	0	0	0	0	1	0	0	0	1	0	0	1	0	1	3
04:45 PM	0	0	0	0	0	0	0	0	0	0	0	2	0	0	2	1	0	0	0	1	3
Total	0	4	0	0	4	0	0	0	0	0	3	6	0	0	9	1	0	2	0	3	16
05:00 PM	0	1	0	0	1	0	0	0	0	0	0	1	0	0	1	0	0	0	0	0	2
05:15 PM	0	1	0	0	1	0	0	0	0	0	0	1	0	0	1	0	0	1	0	1	3
05:30 PM	0	1	0	0	1	0	0	0	0	0	0	1	0	0	1	0	0	0	0	0	2
05:45 PM	0	1	0	0	1	0	0	0	0	0	1	2	0	0	3	0	0	0	0	0	4
Total	0	4	0	0	4	0	0	0	0	0	1	5	0	0	6	0	0	1	0	1	11
06:00 PM	0	1	0	0	1	0	0	0	0	0	0	1	0	0	1	0	0	0	0	0	2
06:15 PM	0	0	0	0	0	0	0	0	0	0	0	0	0	0	0	0	0	1	0	1	1
06:30 PM	0	0	0	0	0	0	0	0	0	0	1	0	0	0	1	0	0	0	0	0	1
06:45 PM	0	1	0	0	1	0	0	0	0	0	0	0	0	0	0	0	0	0	0	0	1
Total	0	2	0	0	2	0	0	0	0	0	1	1	0	0	2	0	0	1	0	1	5
Grand Total	0	61	6	0	67	1	0	1	0	2	15	75	1	0	91	8	0	14	0	22	182
Apprch %	0	91	9	0		50	0	50	0		16.5	82.4	1.1	0		36.4	0	63.6	0		
Total %	0	33.5	3.3	0	36.8	0.5	0	0.5	0	1.1	8.2	41.2	0.5	0	50	4.4	0	7.7	0	12.1	

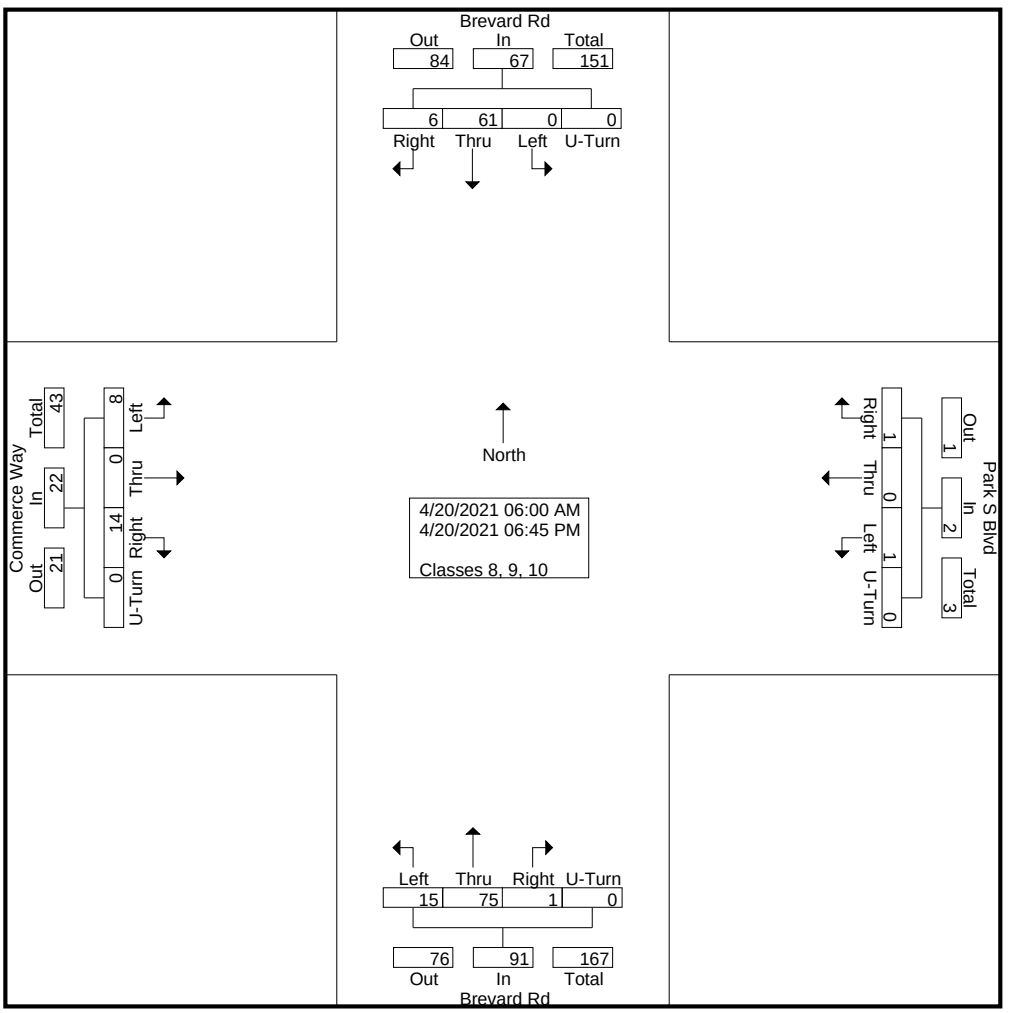

DocuSign Envelope ID: 5C03745C-4B01-4834-A65D-B77F558A4F46

Quality Counts

920 Blairhill Rd, Ste B-106
Charlotte, NC 28217

File Name : 15411713 - Brevard Rd -- Commerce Way_Park S Blvd
Site Code : 15411713
Start Date : 4/20/2021
Page No : 3

	Brevard Rd Southbound					Park S Blvd Westbound					Brevard Rd Northbound					Commerce Way Eastbound					
Start Time	Left	Thru	Right	U-Turn	App. Total	Left	Thru	Right	U-Turn	App. Total	Left	Thru	Right	U-Turn	App. Total	Left	Thru	Right	U-Turn	App. Total	Int. Total
Peak Hour Analysis From 06:00 AM to 11:45 AM - Peak 1 of 1																					
Peak Hour for Entire Intersection Begins at 09:45 AM																					
09:45 AM	0	0	0	0	0	0	0	0	0	0	0	1	0	0	1	0	0	0	0	0	1
10:00 AM	0	2	0	0	2	0	0	0	0	0	0	**4**	0	0	**4**	0	0	0	0	0	6
10:15 AM	0	0	**1**	0	1	0	0	0	0	0	**1**	2	0	0	3	0	0	0	0	0	4
10:30 AM	0	**5**	0	0	**5**	0	0	0	0	0	1	3	0	0	4	0	0	**2**	0	**2**	**11**
Total Volume	0	7	1	0	8	0	0	0	0	0	2	10	0	0	12	0	0	2	0	2	22
% App. Total	0	87.5	12.5	0		0	0	0	0		16.7	83.3	0	0		0	0	100	0		
PHF	.000	.350	.250	.000	.400	.000	.000	.000	.000	.000	.500	.625	.000	.000	.750	.000	.000	.250	.000	.250	.500

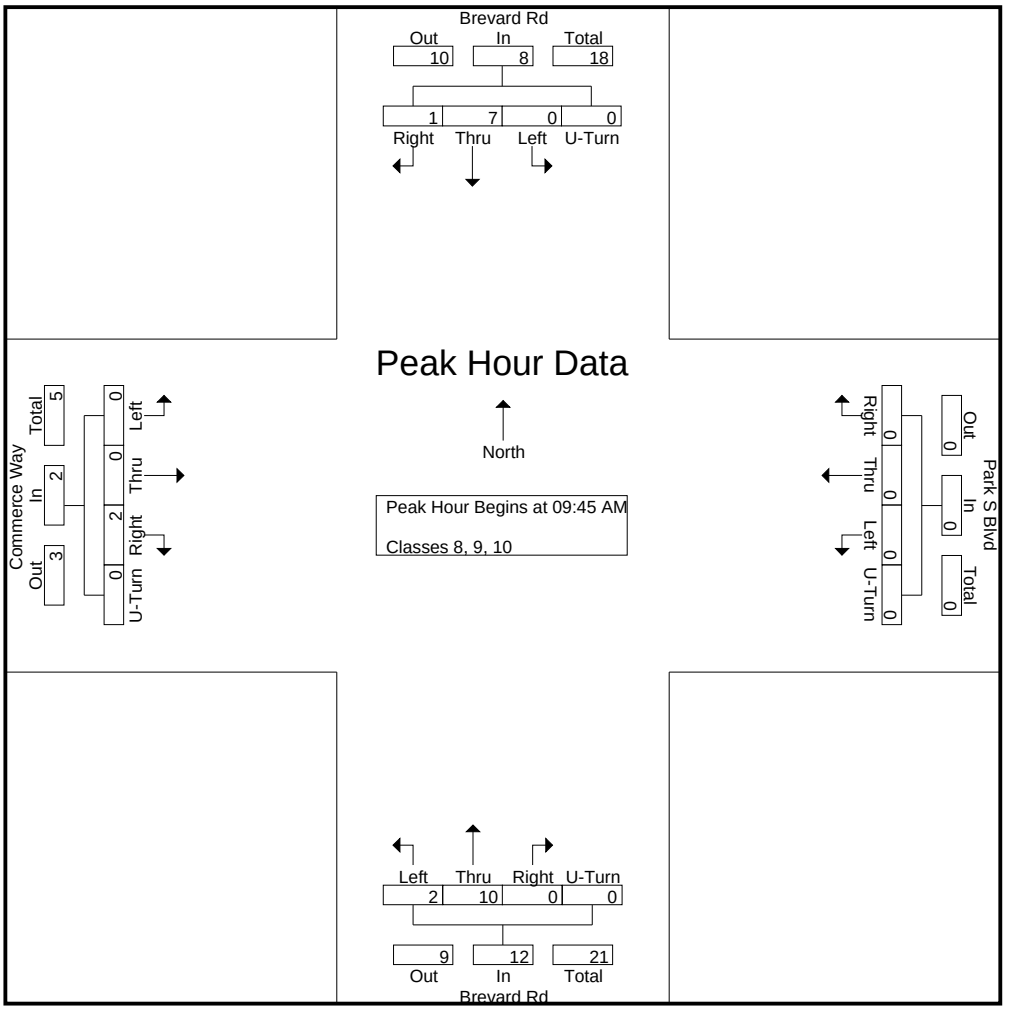

DocuSign Envelope ID: 5C03745C-4B01-4834-A65D-B77F558A4F46

Quality Counts

920 Blairhill Rd, Ste B-106
Charlotte, NC 28217

File Name : 15411713 - Brevard Rd -- Commerce Way_Park S Blvd
Site Code : 15411713
Start Date : 4/20/2021
Page No : 4

	Brevard Rd Southbound					Park S Blvd Westbound					Brevard Rd Northbound					Commerce Way Eastbound					
Start Time	Left	Thru	Right	U-Turn	App. Total	Left	Thru	Right	U-Turn	App. Total	Left	Thru	Right	U-Turn	App. Total	Left	Thru	Right	U-Turn	App. Total	Int. Total
Peak Hour Analysis From 12:00 PM to 06:45 PM - Peak 1 of 1																					
Peak Hour for Entire Intersection Begins at 02:30 PM																					
02:30 PM	0	**3**	0	0	**3**	0	0	0	0	0	0	**4**	0	0	**4**	0	0	0	0	0	**7**
02:45 PM	0	2	**1**	0	3	0	0	0	0	0	0	3	0	0	3	0	0	0	0	0	6
03:00 PM	0	1	0	0	1	0	0	0	0	0	**1**	1	0	0	2	**1**	0	0	0	1	4
03:15 PM	0	1	1	0	2	0	0	0	0	0	1	2	0	0	3	0	0	**2**	0	**2**	7
Total Volume	0	7	2	0	9	0	0	0	0	0	2	10	0	0	12	1	0	2	0	3	24
% App. Total	0	77.8	22.2	0		0	0	0	0		16.7	83.3	0	0		33.3	0	66.7	0		
PHF	.000	.583	.500	.000	.750	.000	.000	.000	.000	.000	.500	.625	.000	.000	.750	.250	.000	.250	.000	.375	.857

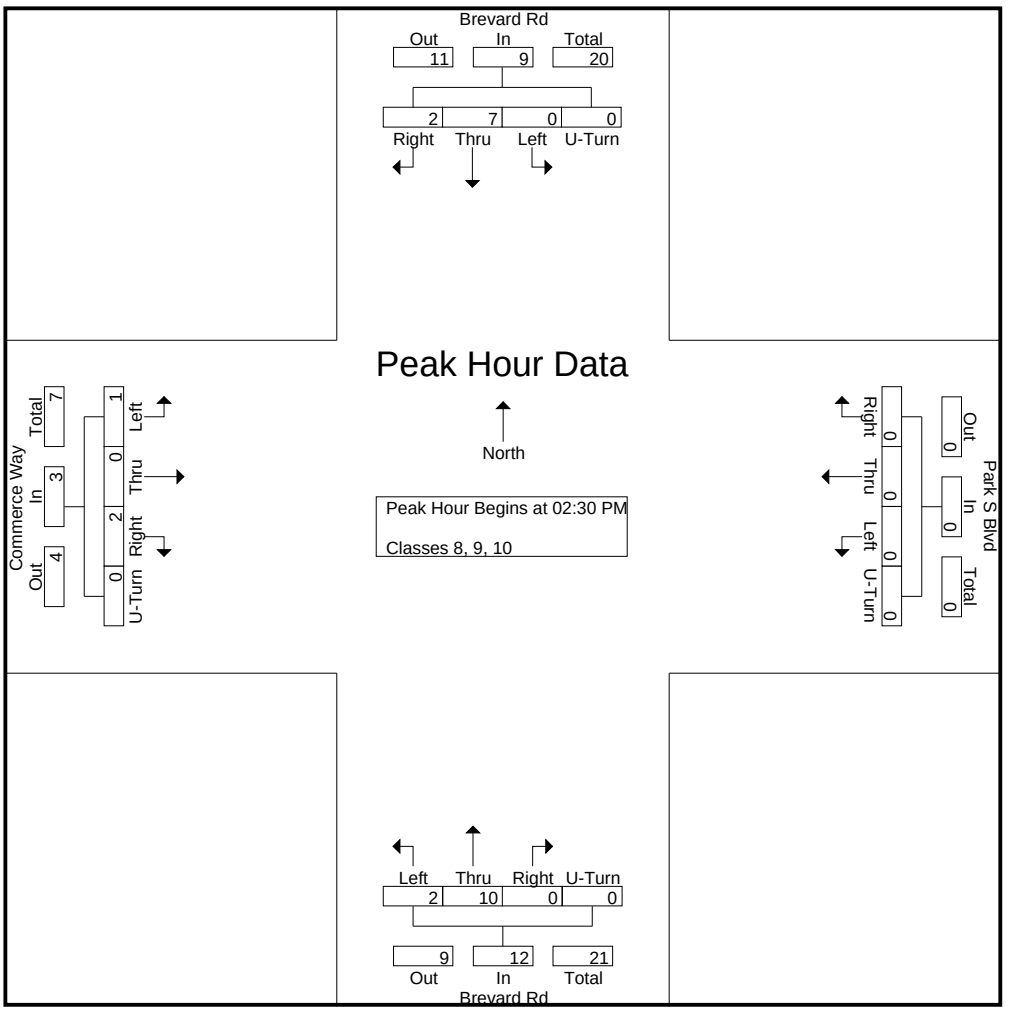

DocuSign Envelope ID: 5C03745C-4B01-4834-A65D-B77F558A4F46

Quality Counts

920 Blairhill Rd, Ste B-106
Charlotte, NC 28217

File Name : 15411713 - Brevard Rd -- Commerce Way_Park S Blvd
Site Code : 15411713
Start Date : 4/20/2021
Page No : 1

Groups Printed- Classes 11, 12, 13

	Brevard Rd Southbound					Park S Blvd Westbound					Brevard Rd Northbound					Commerce Way Eastbound					
Start Time	Left	Thru	Right	U-Turn	App. Total	Left	Thru	Right	U-Turn	App. Total	Left	Thru	Right	U-Turn	App. Total	Left	Thru	Right	U-Turn	App. Total	Int. Total
06:00 AM	0	0	0	0	0	0	0	0	0	0	0	0	0	0	0	0	0	0	0	0	0
06:15 AM	0	0	0	0	0	0	0	0	0	0	0	0	0	0	0	0	0	0	0	0	0
06:30 AM	0	0	0	0	0	0	0	0	0	0	0	0	0	0	0	0	0	0	0	0	0
06:45 AM	0	0	0	0	0	0	0	0	0	0	0	0	0	0	0	0	0	0	0	0	0
Total	0	0	0	0	0	0	0	0	0	0	0	0	0	0	0	0	0	0	0	0	0
07:00 AM	0	0	0	0	0	0	0	0	0	0	0	0	0	0	0	0	0	0	0	0	0
07:15 AM	0	0	0	0	0	0	0	0	0	0	0	0	0	0	0	0	0	0	0	0	0
07:30 AM	0	0	0	0	0	0	0	0	0	0	0	0	0	0	0	0	0	0	0	0	0
07:45 AM	0	0	0	0	0	0	0	0	0	0	0	0	0	0	0	0	0	0	0	0	0
Total	0	0	0	0	0	0	0	0	0	0	0	0	0	0	0	0	0	0	0	0	0
08:00 AM	0	0	0	0	0	0	0	0	0	0	0	0	0	0	0	0	0	0	0	0	0
08:15 AM	0	0	0	0	0	0	0	0	0	0	0	0	0	0	0	0	0	0	0	0	0
08:30 AM	0	0	0	0	0	0	0	0	0	0	0	0	0	0	0	0	0	0	0	0	0
08:45 AM	0	0	0	0	0	0	0	0	0	0	0	0	0	0	0	0	0	0	0	0	0
Total	0	0	0	0	0	0	0	0	0	0	0	0	0	0	0	0	0	0	0	0	0
09:00 AM	0	0	0	0	0	0	0	0	0	0	0	0	0	0	0	0	0	0	0	0	0
09:15 AM	0	0	0	0	0	0	0	0	0	0	0	0	0	0	0	0	0	0	0	0	0
09:30 AM	0	0	0	0	0	0	0	0	0	0	0	0	0	0	0	0	0	0	0	0	0
09:45 AM	0	0	0	0	0	0	0	0	0	0	0	0	0	0	0	0	0	0	0	0	0
Total	0	0	0	0	0	0	0	0	0	0	0	0	0	0	0	0	0	0	0	0	0
10:00 AM	0	0	0	0	0	0	0	0	0	0	0	0	0	0	0	0	0	0	0	0	0
10:15 AM	0	0	0	0	0	0	0	0	0	0	0	0	0	0	0	0	0	0	0	0	0
10:30 AM	0	0	0	0	0	0	0	0	0	0	0	0	0	0	0	0	0	0	0	0	0
10:45 AM	0	0	0	0	0	0	0	0	0	0	0	0	0	0	0	0	0	0	0	0	0
Total	0	0	0	0	0	0	0	0	0	0	0	0	0	0	0	0	0	0	0	0	0
11:00 AM	0	0	0	0	0	0	0	0	0	0	0	0	0	0	0	0	0	0	0	0	0
11:15 AM	0	0	0	0	0	0	0	0	0	0	0	0	0	0	0	0	0	0	0	0	0
11:30 AM	0	0	0	0	0	0	0	0	0	0	0	0	0	0	0	0	0	0	0	0	0
11:45 AM	0	0	0	0	0	0	0	0	0	0	0	0	0	0	0	0	0	0	0	0	0
Total	0	0	0	0	0	0	0	0	0	0	0	0	0	0	0	0	0	0	0	0	0
12:00 PM	0	0	0	0	0	0	0	0	0	0	0	0	0	0	0	0	0	0	0	0	0
12:15 PM	0	0	0	0	0	0	0	0	0	0	0	0	0	0	0	0	0	0	0	0	0
12:30 PM	0	0	0	0	0	0	0	0	0	0	0	0	0	0	0	0	0	0	0	0	0
12:45 PM	0	0	0	0	0	0	0	0	0	0	0	0	0	0	0	0	0	0	0	0	0
Total	0	0	0	0	0	0	0	0	0	0	0	0	0	0	0	0	0	0	0	0	0
01:00 PM	0	0	0	0	0	0	0	0	0	0	0	0	0	0	0	0	0	0	0	0	0
01:15 PM	0	0	0	0	0	0	0	0	0	0	0	0	0	0	0	0	0	0	0	0	0
01:30 PM	0	0	0	0	0	0	0	0	0	0	0	0	0	0	0	0	0	0	0	0	0
01:45 PM	0	0	0	0	0	0	0	0	0	0	0	0	0	0	0	0	0	0	0	0	0
Total	0	0	0	0	0	0	0	0	0	0	0	0	0	0	0	0	0	0	0	0	0
02:00 PM	0	0	0	0	0	0	0	0	0	0	0	0	0	0	0	0	0	0	0	0	0
02:15 PM	0	0	0	0	0	0	0	0	0	0	0	0	0	0	0	0	0	0	0	0	0
02:30 PM	0	0	0	0	0	0	0	0	0	0	0	0	0	0	0	0	0	0	0	0	0
02:45 PM	0	0	0	0	0	0	0	0	0	0	0	0	0	0	0	0	0	0	0	0	0
Total	0	0	0	0	0	0	0	0	0	0	0	0	0	0	0	0	0	0	0	0	0
03:00 PM	0	0	0	0	0	0	0	0	0	0	0	0	0	0	0	0	0	0	0	0	0
03:15 PM	0	0	0	0	0	0	0	0	0	0	0	0	0	0	0	0	0	0	0	0	0
03:30 PM	0	0	0	0	0	0	0	0	0	0	0	0	0	0	0	0	0	0	0	0	0

DocuSign Envelope ID: 5C03745C-4B01-4834-A65D-B77F558A4F46

Quality Counts

920 Blairhill Rd, Ste B-106
Charlotte, NC 28217

File Name : 15411713 - Brevard Rd -- Commerce Way_Park S Blvd
Site Code : 15411713
Start Date : 4/20/2021

Groups Printed- Classes 11, 12, 13

	Brevard Rd Southbound					Park S Blvd Westbound					Brevard Rd Northbound					Commerce Way Eastbound					
Start Time	Left	Thru	Right	U-Turn	App. Total	Left	Thru	Right	U-Turn	App. Total	Left	Thru	Right	U-Turn	App. Total	Left	Thru	Right	U-Turn	App. Total	Int. Total
03:45 PM	0	0	0	0	0	0	0	0	0	0	0	0	0	0	0	0	0	0	0	0	0
Total	0	0	0	0	0	0	0	0	0	0	0	0	0	0	0	0	0	0	0	0	0
04:00 PM	0	0	0	0	0	0	0	0	0	0	0	0	0	0	0	0	0	0	0	0	0
04:15 PM	0	0	0	0	0	0	0	0	0	0	0	0	0	0	0	0	0	0	0	0	0
04:30 PM	0	0	0	0	0	0	0	0	0	0	0	0	0	0	0	0	0	0	0	0	0
04:45 PM	0	0	0	0	0	0	0	0	0	0	0	0	0	0	0	0	0	0	0	0	0
Total	0	0	0	0	0	0	0	0	0	0	0	0	0	0	0	0	0	0	0	0	0
05:00 PM	0	0	0	0	0	0	0	0	0	0	0	0	0	0	0	0	0	0	0	0	0
05:15 PM	0	0	0	0	0	0	0	0	0	0	0	0	0	0	0	0	0	0	0	0	0
05:30 PM	0	0	0	0	0	0	0	0	0	0	0	0	0	0	0	0	0	0	0	0	0
05:45 PM	0	0	0	0	0	0	0	0	0	0	0	0	0	0	0	0	0	0	0	0	0
Total	0	0	0	0	0	0	0	0	0	0	0	0	0	0	0	0	0	0	0	0	0
06:00 PM	0	0	0	0	0	0	0	0	0	0	0	0	0	0	0	0	0	0	0	0	0
06:15 PM	0	0	0	0	0	0	0	0	0	0	0	0	0	0	0	0	0	0	0	0	0
06:30 PM	0	0	0	0	0	0	0	0	0	0	0	0	0	0	0	0	0	0	0	0	0
06:45 PM	0	0	0	0	0	0	0	0	0	0	0	0	0	0	0	0	0	0	0	0	0
Total	0	0	0	0	0	0	0	0	0	0	0	0	0	0	0	0	0	0	0	0	0
Grand Total	0	0	0	0	0	0	0	0	0	0	0	0	0	0	0	0	0	0	0	0	0
Apprch %	0	0	0	0		0	0	0	0		0	0	0	0		0	0	0	0		
Total %																					

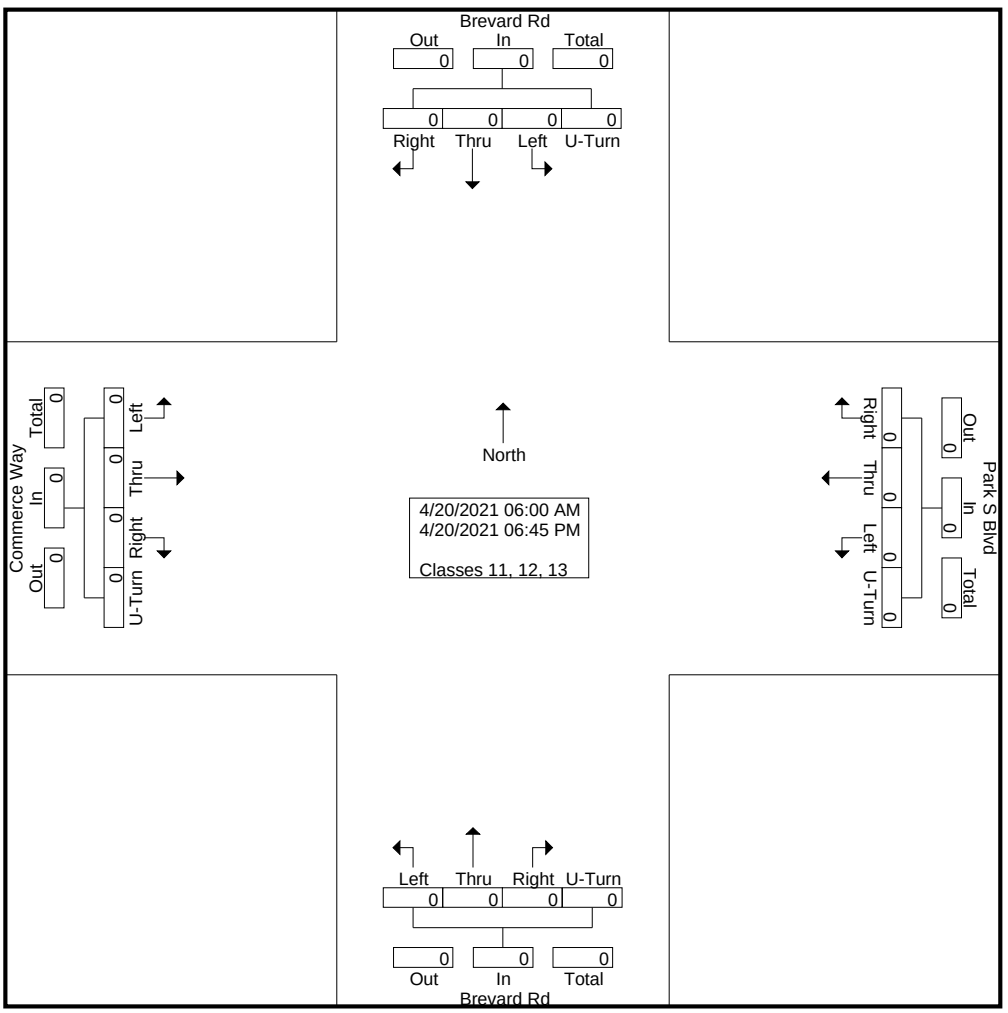

DocuSign Envelope ID: 5C03745C-4B01-4834-A65D-B77F558A4F46

Quality Counts

920 Blairhill Rd, Ste B-106
Charlotte, NC 28217

File Name : 15411713 - Brevard Rd -- Commerce Way_Park S Blvd
Site Code : 15411713
Start Date : 4/20/2021
Page No : 3

	Brevard Rd Southbound					Park S Blvd Westbound					Brevard Rd Northbound					Commerce Way Eastbound					
Start Time	Left	Thru	Right	U-Turn	App. Total	Left	Thru	Right	U-Turn	App. Total	Left	Thru	Right	U-Turn	App. Total	Left	Thru	Right	U-Turn	App. Total	Int. Total
Peak Hour Analysis From 06:00 AM to 11:45 AM - Peak 1 of 1																					
Peak Hour for Entire Intersection Begins at 06:00 AM																					
06:00 AM	0	0	0	0	0	0	0	0	0	0	0	0	0	0	0	0	0	0	0	0	0
06:15 AM	0	0	0	0	0	0	0	0	0	0	0	0	0	0	0	0	0	0	0	0	0
06:30 AM	0	0	0	0	0	0	0	0	0	0	0	0	0	0	0	0	0	0	0	0	0
06:45 AM	0	0	0	0	0	0	0	0	0	0	0	0	0	0	0	0	0	0	0	0	0
Total Volume	0	0	0	0	0	0	0	0	0	0	0	0	0	0	0	0	0	0	0	0	0
% App. Total	0	0	0	0		0	0	0	0		0	0	0	0		0	0	0	0		
PHF	.000	.000	.000	.000	.000	.000	.000	.000	.000	.000	.000	.000	.000	.000	.000	.000	.000	.000	.000	.000	.000

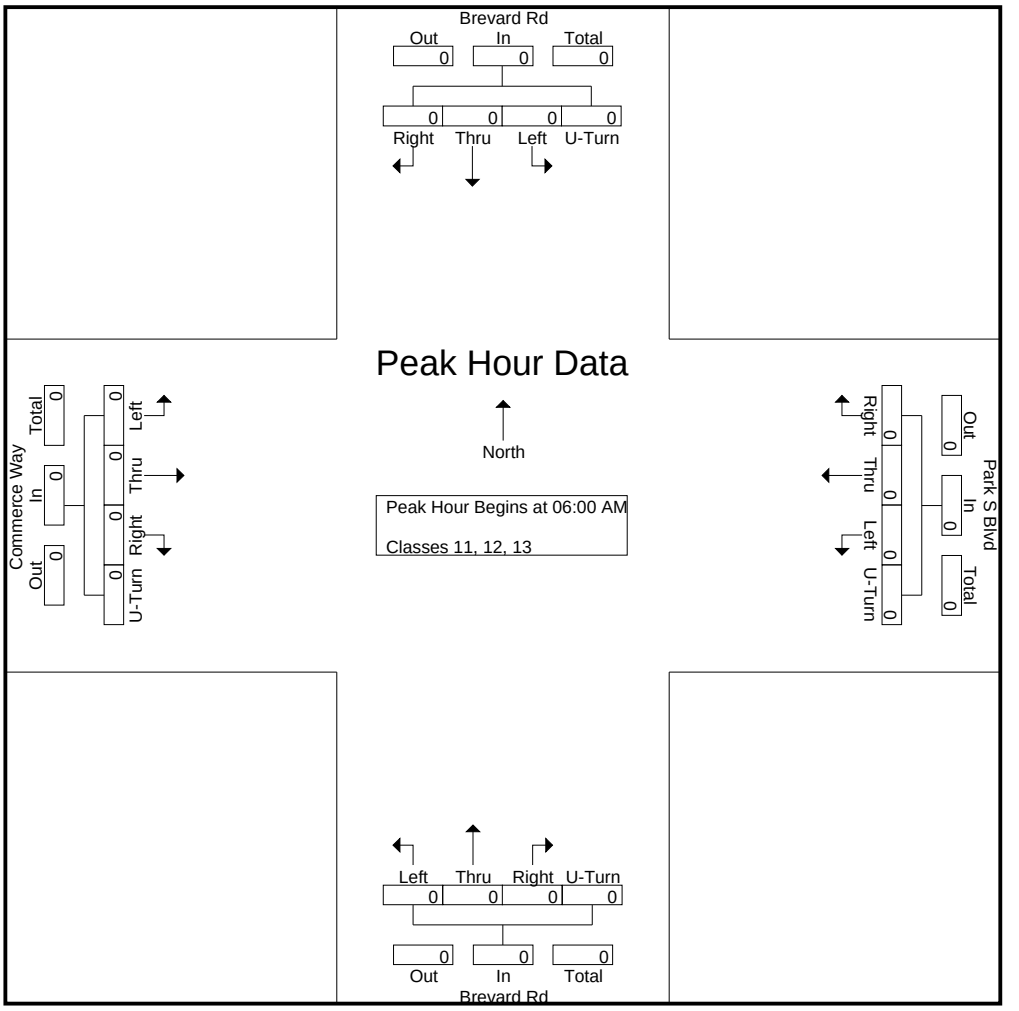

DocuSign Envelope ID: 5C03745C-4B01-4834-A65D-B77F558A4F46

Quality Counts

920 Blairhill Rd, Ste B-106
Charlotte, NC 28217

File Name : 15411713 - Brevard Rd -- Commerce Way_Park S Blvd
Site Code : 15411713
Start Date : 4/20/2021
Page No : 4

	Brevard Rd Southbound					Park S Blvd Westbound					Brevard Rd Northbound					Commerce Way Eastbound					
Start Time	Left	Thru	Right	U-Turn	App. Total	Left	Thru	Right	U-Turn	App. Total	Left	Thru	Right	U-Turn	App. Total	Left	Thru	Right	U-Turn	App. Total	Int. Total
Peak Hour Analysis From 12:00 PM to 06:45 PM - Peak 1 of 1																					
Peak Hour for Entire Intersection Begins at 12:00 PM																					
12:00 PM	0	0	0	0	0	0	0	0	0	0	0	0	0	0	0	0	0	0	0	0	0
12:15 PM	0	0	0	0	0	0	0	0	0	0	0	0	0	0	0	0	0	0	0	0	0
12:30 PM	0	0	0	0	0	0	0	0	0	0	0	0	0	0	0	0	0	0	0	0	0
12:45 PM	0	0	0	0	0	0	0	0	0	0	0	0	0	0	0	0	0	0	0	0	0
Total Volume	0	0	0	0	0	0	0	0	0	0	0	0	0	0	0	0	0	0	0	0	0
% App. Total	0	0	0	0		0	0	0	0		0	0	0	0		0	0	0	0		
PHF	.000	.000	.000	.000	.000	.000	.000	.000	.000	.000	.000	.000	.000	.000	.000	.000	.000	.000	.000	.000	.000

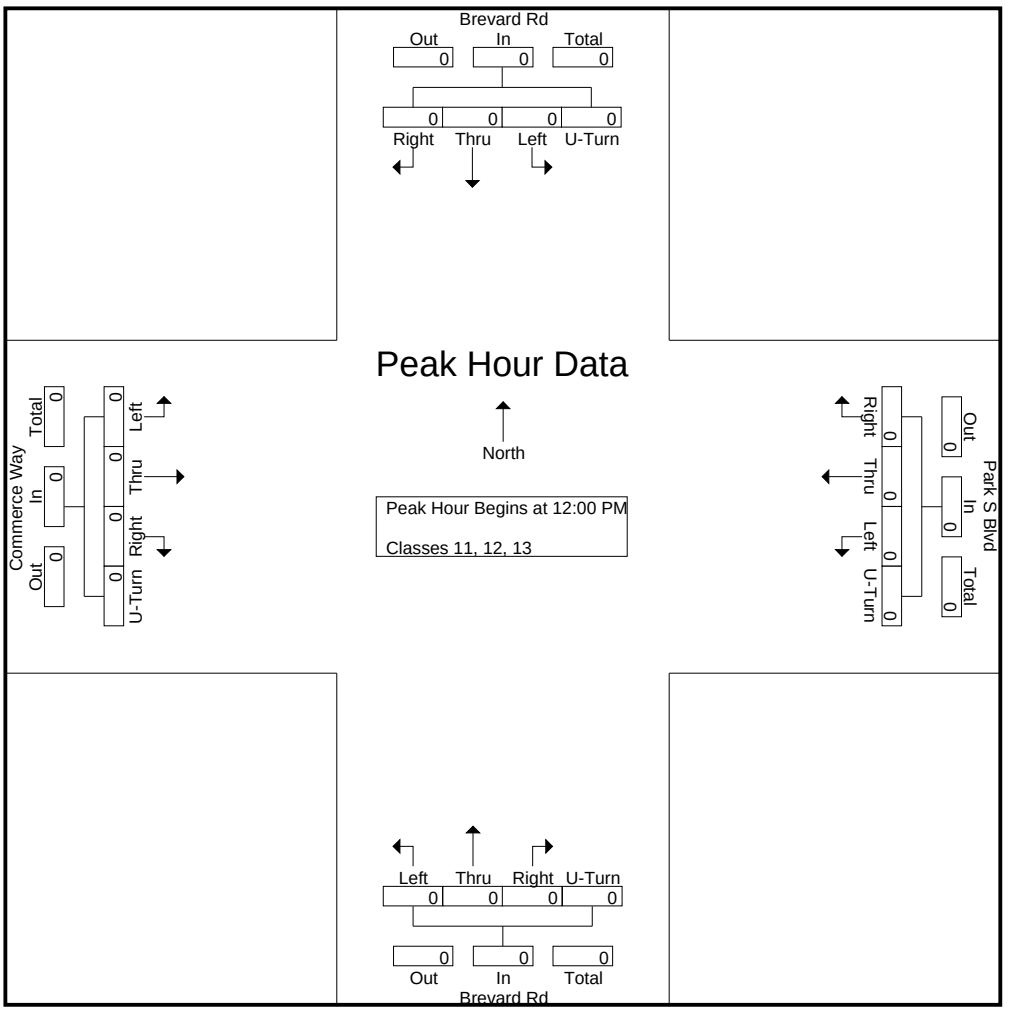

DocuSign Envelope ID: 5C03745C-4B01-4834-A65D-B77F558A4F46

Quality Counts

920 Blairhill Rd, Ste B-106
Charlotte, NC 28217

File Name : 15411713 - Brevard Rd -- Commerce Way_Park S Blvd
Site Code : 15411713
Start Date : 4/20/2021
Page No : 1

Groups Printed- Bikes, Peds

	Brevard Rd Southbound					Park S Blvd Westbound					Brevard Rd Northbound					Commerce Way Eastbound					
Start Time	Left	Thru	Right	Peds	App. Total	Left	Thru	Right	Peds	App. Total	Left	Thru	Right	Peds	App. Total	Left	Thru	Right	Peds	App. Total	Int. Total
06:00 AM	0	0	0	0	0	0	0	0	0	0	0	0	0	0	0	0	0	0	0	0	0
06:15 AM	0	1	0	0	1	0	0	0	0	0	0	0	0	0	0	0	0	0	0	0	1
06:30 AM	0	0	0	0	0	0	0	0	0	0	0	0	0	0	0	0	0	0	0	0	0
06:45 AM	0	0	0	0	0	0	0	0	0	0	0	0	0	0	0	0	0	0	0	0	0
Total	0	1	0	0	1	0	0	0	0	0	0	0	0	0	0	0	0	0	0	0	1
07:00 AM	0	0	0	0	0	0	0	0	0	0	0	0	0	0	0	0	0	0	0	0	0
07:15 AM	0	0	0	0	0	0	0	0	0	0	0	0	0	0	0	0	0	0	0	0	0
07:30 AM	0	0	0	0	0	0	0	0	0	0	0	0	0	0	0	0	0	0	0	0	0
07:45 AM	0	0	0	0	0	0	0	0	0	0	0	0	0	0	0	0	0	0	0	0	0
Total	0	0	0	0	0	0	0	0	0	0	0	0	0	0	0	0	0	0	0	0	0
08:00 AM	0	0	0	0	0	0	0	0	0	0	0	0	0	0	0	0	0	0	0	0	0
08:15 AM	0	0	0	0	0	0	0	0	0	0	0	0	0	0	0	0	0	0	0	0	0
08:30 AM	0	0	0	0	0	0	0	0	0	0	0	0	0	0	0	0	0	0	0	0	0
08:45 AM	0	0	0	0	0	0	0	0	0	0	0	0	0	0	0	0	0	0	0	0	0
Total	0	0	0	0	0	0	0	0	0	0	0	0	0	0	0	0	0	0	0	0	0
09:00 AM	0	0	0	0	0	0	0	0	0	0	0	0	0	0	0	0	0	0	0	0	0
09:15 AM	0	0	0	0	0	0	0	0	0	0	0	0	0	0	0	0	0	0	0	0	0
09:30 AM	0	0	0	0	0	0	0	0	0	0	0	0	0	0	0	0	0	0	0	0	0
09:45 AM	0	0	0	0	0	0	0	0	0	0	0	0	0	0	0	0	0	0	0	0	0
Total	0	0	0	0	0	0	0	0	0	0	0	0	0	0	0	0	0	0	0	0	0
10:00 AM	0	0	0	0	0	0	0	0	0	0	0	0	0	0	0	0	0	0	0	0	0
10:15 AM	0	0	0	0	0	0	0	0	0	0	0	0	0	0	0	0	0	0	0	0	0
10:30 AM	0	0	0	0	0	0	0	0	0	0	0	0	0	0	0	0	0	0	0	0	0
10:45 AM	0	0	0	0	0	0	0	0	0	0	0	0	0	0	0	0	0	0	0	0	0
Total	0	0	0	0	0	0	0	0	0	0	0	0	0	0	0	0	0	0	0	0	0
11:00 AM	0	0	0	0	0	0	0	0	0	0	0	0	0	0	0	0	0	0	0	0	0
11:15 AM	0	0	0	0	0	0	0	0	0	0	0	0	0	0	0	0	0	0	0	0	0
11:30 AM	0	0	0	0	0	0	0	0	0	0	0	0	0	0	0	0	0	0	0	0	0
11:45 AM	0	0	0	0	0	0	0	0	0	0	0	0	0	0	0	0	0	0	0	0	0
Total	0	0	0	0	0	0	0	0	0	0	0	0	0	0	0	0	0	0	0	0	0
12:00 PM	0	0	0	0	0	0	0	0	0	0	0	0	0	0	0	0	0	0	0	0	0
12:15 PM	0	0	0	0	0	0	0	0	0	0	0	0	0	0	0	0	0	0	0	0	0
12:30 PM	0	0	0	0	0	0	0	0	0	0	0	0	0	0	0	0	0	0	0	0	0
12:45 PM	0	0	0	0	0	0	0	0	0	0	0	0	0	0	0	0	0	0	0	0	0
Total	0	0	0	0	0	0	0	0	0	0	0	0	0	0	0	0	0	0	0	0	0
01:00 PM	0	0	0	0	0	0	0	0	0	0	0	0	0	0	0	0	0	0	0	0	0
01:15 PM	0	0	0	0	0	0	0	0	0	0	0	0	0	0	0	0	0	0	0	0	0
01:30 PM	0	0	0	0	0	0	0	0	0	0	0	1	0	0	1	0	0	0	0	0	1
01:45 PM	0	0	0	0	0	0	0	0	0	0	0	0	0	0	0	0	0	0	0	0	0
Total	0	0	0	0	0	0	0	0	0	0	0	1	0	0	1	0	0	0	0	0	1
02:00 PM	0	0	0	0	0	0	0	0	0	0	0	0	0	0	0	0	0	0	0	0	0
02:15 PM	0	0	0	0	0	0	0	0	0	0	0	0	0	0	0	0	0	0	0	0	0
02:30 PM	0	0	0	0	0	0	0	0	0	0	0	0	0	0	0	0	0	0	0	0	0
02:45 PM	0	0	0	0	0	0	0	0	0	0	0	0	0	0	0	0	0	0	0	0	0
Total	0	0	0	0	0	0	0	0	0	0	0	0	0	0	0	0	0	0	0	0	0
03:00 PM	0	0	0	0	0	0	0	0	0	0	0	0	0	0	0	0	0	0	0	0	0
03:15 PM	0	0	0	0	0	0	0	0	0	0	0	0	0	0	0	0	0	0	0	0	0
03:30 PM	0	0	0	0	0	0	0	0	0	0	0	0	0	0	0	0	0	0	0	0	0

DocuSign Envelope ID: 5C03745C-4B01-4834-A65D-B77F558A4F46

Quality Counts

920 Blairhill Rd, Ste B-106
Charlotte, NC 28217

File Name : 15411713 - Brevard Rd -- Commerce Way_Park S Blvd
Site Code : 15411713
Start Date : 4/20/2021

Groups Printed- Bikes, Peds

	Brevard Rd Southbound					Park S Blvd Westbound					Brevard Rd Northbound					Commerce Way Eastbound					
Start Time	Left	Thru	Right	Peds	App. Total	Left	Thru	Right	Peds	App. Total	Left	Thru	Right	Peds	App. Total	Left	Thru	Right	Peds	App. Total	Int. Total
03:45 PM	0	0	0	0	0	0	0	0	0	0	0	0	0	0	0	0	0	0	0	0	0
Total	0	0	0	0	0	0	0	0	0	0	0	0	0	0	0	0	0	0	0	0	0
04:00 PM	0	0	0	0	0	0	0	0	0	0	0	0	0	0	0	0	0	0	0	0	0
04:15 PM	0	0	0	0	0	0	0	0	0	0	0	1	0	0	1	0	0	0	0	0	1
04:30 PM	0	0	0	0	0	0	0	0	0	0	0	0	0	0	0	0	0	0	0	0	0
04:45 PM	0	0	0	0	0	0	0	0	0	0	0	0	0	0	0	0	0	0	0	0	0
Total	0	0	0	0	0	0	0	0	0	0	0	1	0	0	1	0	0	0	0	0	1
05:00 PM	0	0	0	0	0	0	0	0	0	0	0	0	0	0	0	0	0	0	0	0	0
05:15 PM	0	0	0	0	0	0	0	0	0	0	0	1	0	0	1	0	0	0	0	0	1
05:30 PM	0	0	0	0	0	0	0	0	0	0	0	0	0	0	0	0	0	0	0	0	0
05:45 PM	0	0	0	0	0	0	0	0	0	0	0	0	0	1	1	0	0	0	0	0	1
Total	0	0	0	0	0	0	0	0	0	0	0	1	0	1	2	0	0	0	0	0	2
06:00 PM	0	0	0	0	0	0	0	0	1	1	0	0	0	0	0	0	0	0	0	0	1
06:15 PM	0	0	0	0	0	0	0	0	0	0	0	0	0	0	0	0	0	0	0	0	0
06:30 PM	0	0	0	0	0	0	0	0	0	0	0	0	0	0	0	0	0	0	0	0	0
06:45 PM	0	0	0	0	0	0	0	0	0	0	0	0	0	0	0	0	0	0	0	0	0
Total	0	0	0	0	0	0	0	0	1	1	0	0	0	0	0	0	0	0	0	0	1
Grand Total	0	1	0	0	1	0	0	0	1	1	0	3	0	1	4	0	0	0	0	0	6
Apprch %	0	100	0	0		0	0	0	100		0	75	0	25		0	0	0	0		
Total %	0	16.7	0	0	16.7	0	0	0	16.7	16.7	0	50	0	16.7	66.7	0	0	0	0	0	

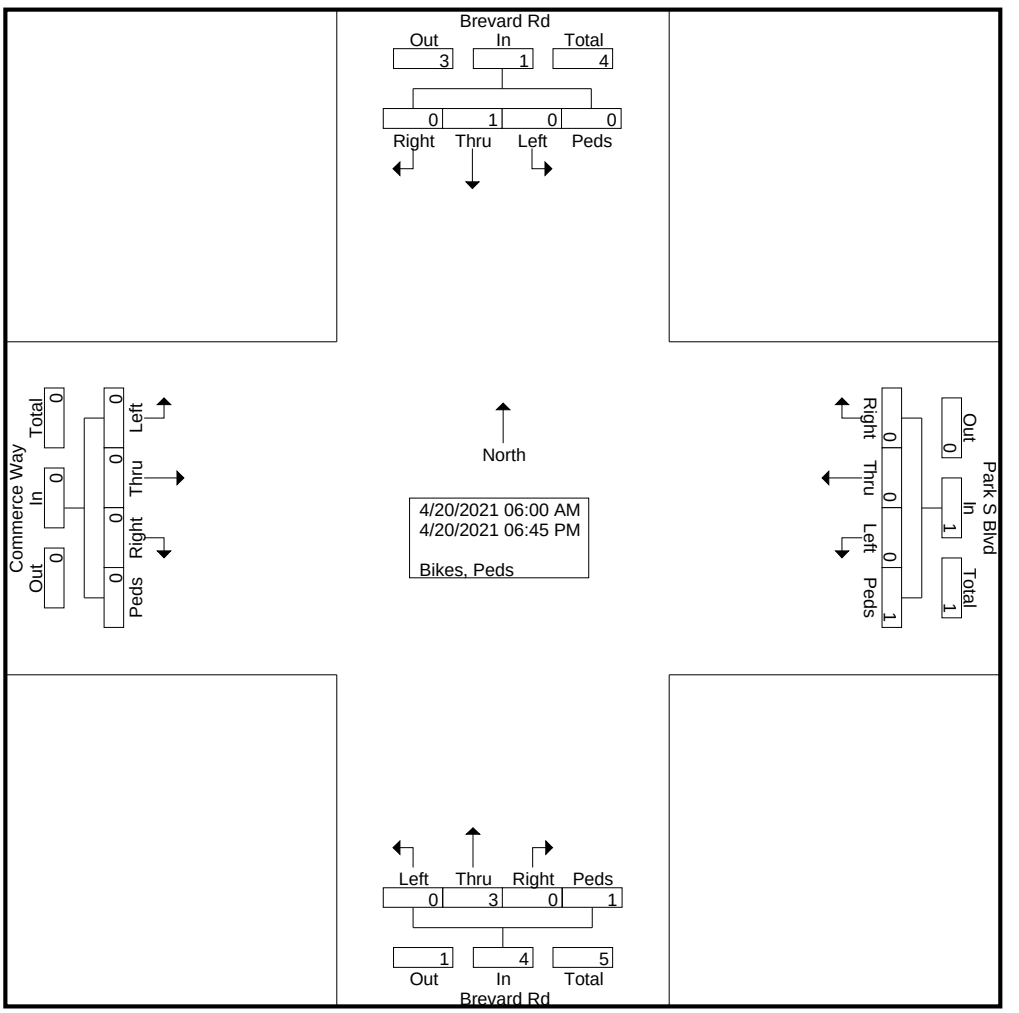

DocuSign Envelope ID: 5C03745C-4B01-4834-A65D-B77F558A4F46

Quality Counts

920 Blairhill Rd, Ste B-106
Charlotte, NC 28217

File Name : 15411713 - Brevard Rd -- Commerce Way_Park S Blvd
Site Code : 15411713
Start Date : 4/20/2021

	Brevard Rd Southbound					Park S Blvd Westbound					Brevard Rd Northbound					Commerce Way Eastbound					
Start Time	Left	Thru	Right	Peds	App. Total	Left	Thru	Right	Peds	App. Total	Left	Thru	Right	Peds	App. Total	Left	Thru	Right	Peds	App. Total	Int. Total
Peak Hour Analysis From 06:00 AM to 11:45 AM - Peak 1 of 1																					
Peak Hour for Entire Intersection Begins at 06:00 AM																					
06:00 AM	0	0	0	0	0	0	0	0	0	0	0	0	0	0	0	0	0	0	0	0	0
06:15 AM	0	**1**	0	0	**1**	0	0	0	0	0	0	0	0	0	0	0	0	0	0	0	**1**
06:30 AM	0	0	0	0	0	0	0	0	0	0	0	0	0	0	0	0	0	0	0	0	0
06:45 AM	0	0	0	0	0	0	0	0	0	0	0	0	0	0	0	0	0	0	0	0	0
Total Volume	0	1	0	0	1	0	0	0	0	0	0	0	0	0	0	0	0	0	0	0	1
% App. Total	0	100	0	0		0	0	0	0		0	0	0	0		0	0	0	0		
PHF	.000	.250	.000	.000	.250	.000	.000	.000	.000	.000	.000	.000	.000	.000	.000	.000	.000	.000	.000	.000	.250

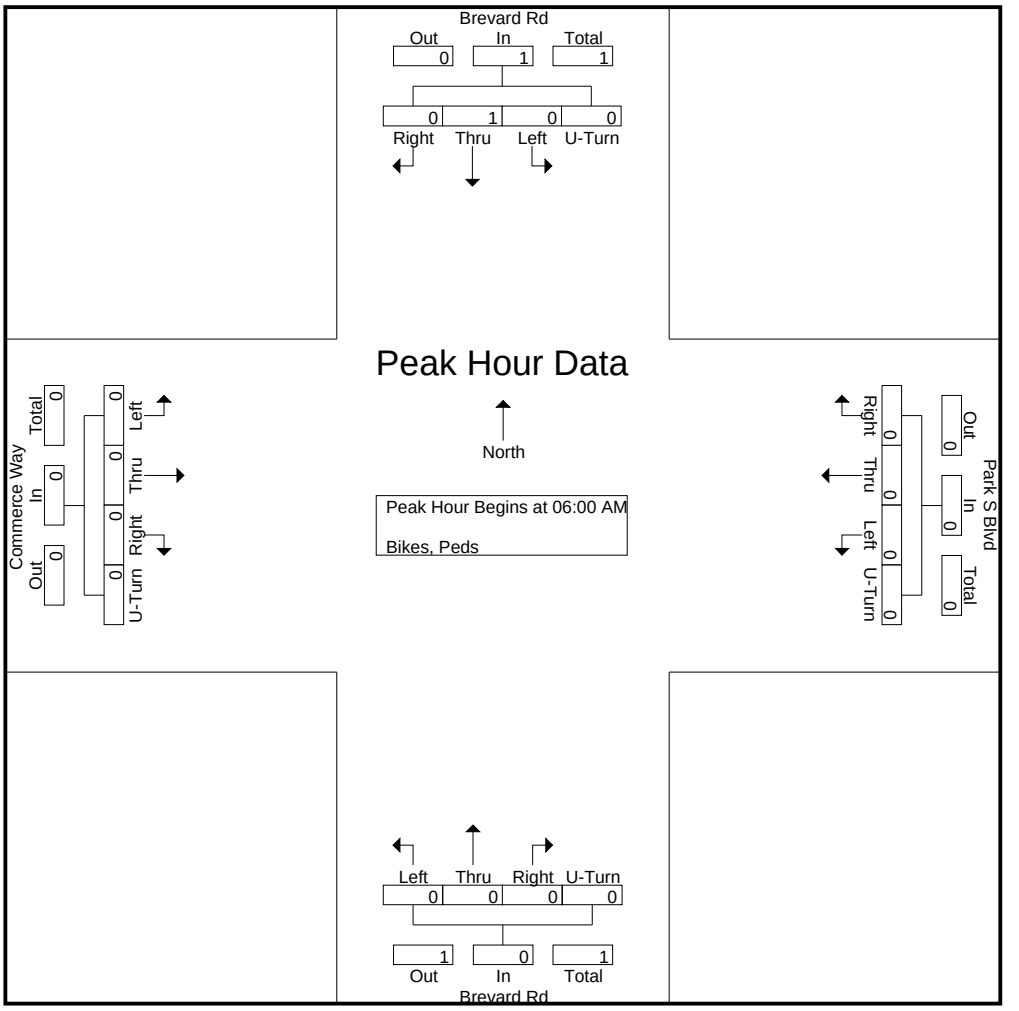

DocuSign Envelope ID: 5C03745C-4B01-4834-A65D-B77F558A4F46

Quality Counts

920 Blairhill Rd, Ste B-106
Charlotte, NC 28217

File Name : 15411713 - Brevard Rd -- Commerce Way_Park S Blvd
Site Code : 15411713
Start Date : 4/20/2021
Page No : 4

	Brevard Rd Southbound					Park S Blvd Westbound					Brevard Rd Northbound					Commerce Way Eastbound					
Start Time	Left	Thru	Right	Peds	App. Total	Left	Thru	Right	Peds	App. Total	Left	Thru	Right	Peds	App. Total	Left	Thru	Right	Peds	App. Total	Int. Total
Peak Hour Analysis From 12:00 PM to 06:45 PM - Peak 1 of 1																					
Peak Hour for Entire Intersection Begins at 05:15 PM																					
05:15 PM	0	0	0	0	0	0	0	0	0	0	0	**1**	0	0	**1**	0	0	0	0	0	**1**
05:30 PM	0	0	0	0	0	0	0	0	0	0	0	0	0	0	0	0	0	0	0	0	0
05:45 PM	0	0	0	0	0	0	0	0	0	0	0	0	0	**1**	1	0	0	0	0	0	1
06:00 PM	0	0	0	0	0	0	0	0	**1**	**1**	0	0	0	0	0	0	0	0	0	0	1
Total Volume	0	0	0	0	0	0	0	0	1	1	0	1	0	1	2	0	0	0	0	0	3
% App. Total	0	0	0	0		0	0	0	100		0	50	0	50		0	0	0	0		
PHF	.000	.000	.000	.000	.000	.000	.000	.000	.250	.250	.000	.250	.000	.250	.500	.000	.000	.000	.000	.000	.750

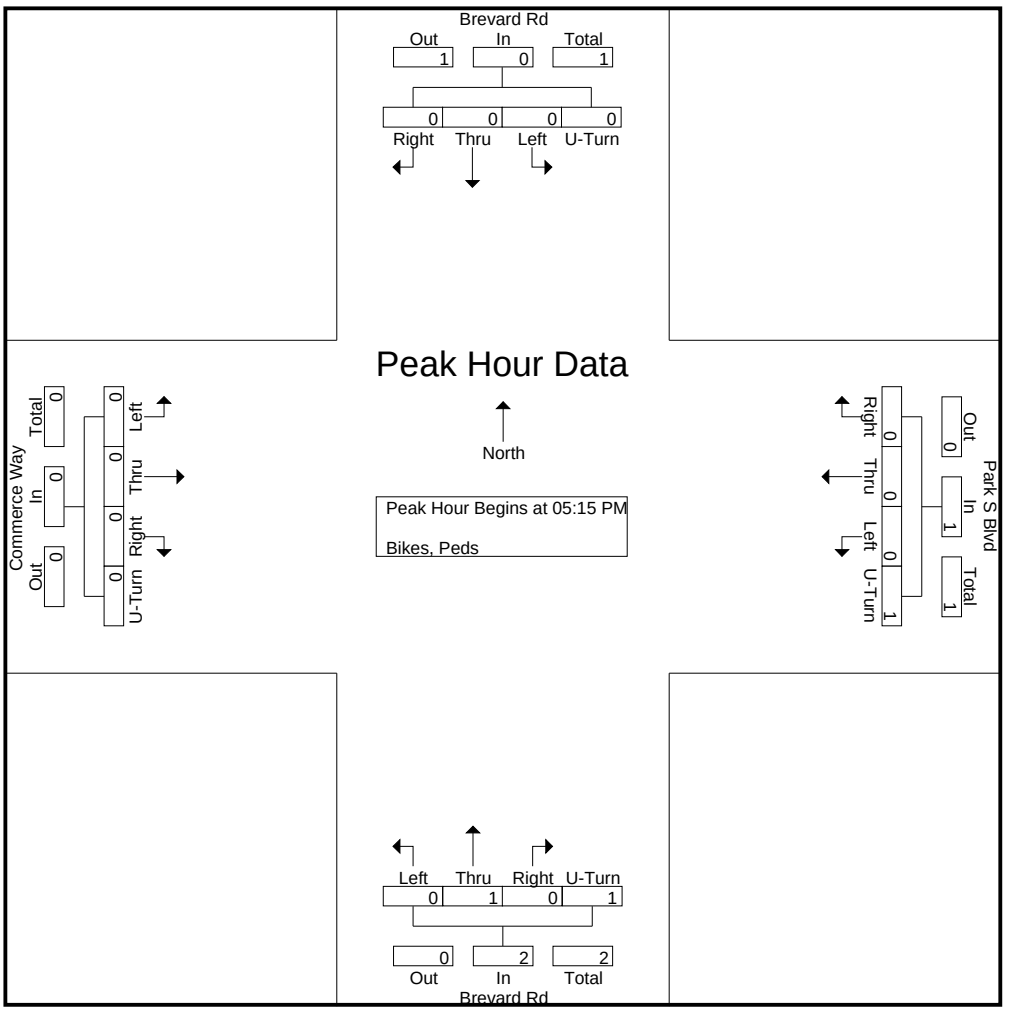

DocuSign Envelope ID: 5C03745C-4B01-4834-A65D-B77F558A4F46

QUALITY COUNTS LLC
920 Blairhill Rd, Suite 106, Charlotte, NC 28217
704.215.4616

Count Number: 15411714
County: Buncombe
City: Arden
Division: 13

Location: Brevard Rd & Vista Blvd/Long Shoals Rd
General Location Type: Intersection
Count Type: Turning Movement (Classification)
Count Start Date: 4/20/2021
Time: 6:00 AM – 7:00 PM
Volume: 17,989

Maximum Temperature: 69° F
Minimum Temperature: 40° F
Precipitation: 0.00 in
Snowfall: 0.0 in
Average Sky Cover: 0.2
Weather Conditions: Clear

1. **School in Session:** Yes
2. **Pedestrians Counted**: Yes
3. **Disabled Pedestrians Present**: No
   Description and Approaches Used: N/A
4. **Counted By**: Jared Pierson
5. **Data Processor**: Jon B
6. **Signal Inventory**: N/A
7. **Data Collection Method**: Video/Count Board
8. **Equipment Operating Properly**: Yes
9. **Area Lighting Present**: Yes
10. **Nearest Roadway Stop Sign < 300 ft:** No
    If yes, list approaches: N/A
11. **Nearest Traffic Signal < 300 ft:** No
    If yes, list approaches: N/A
12. **At-Grade Railroad Crossing Present (<200 ft):** No
    If yes, list approaches & distance: N/A
13. **Other:**

↑ North

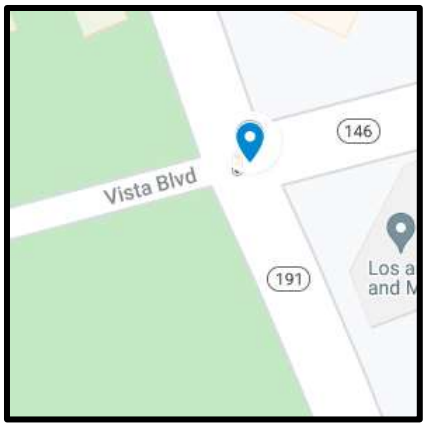

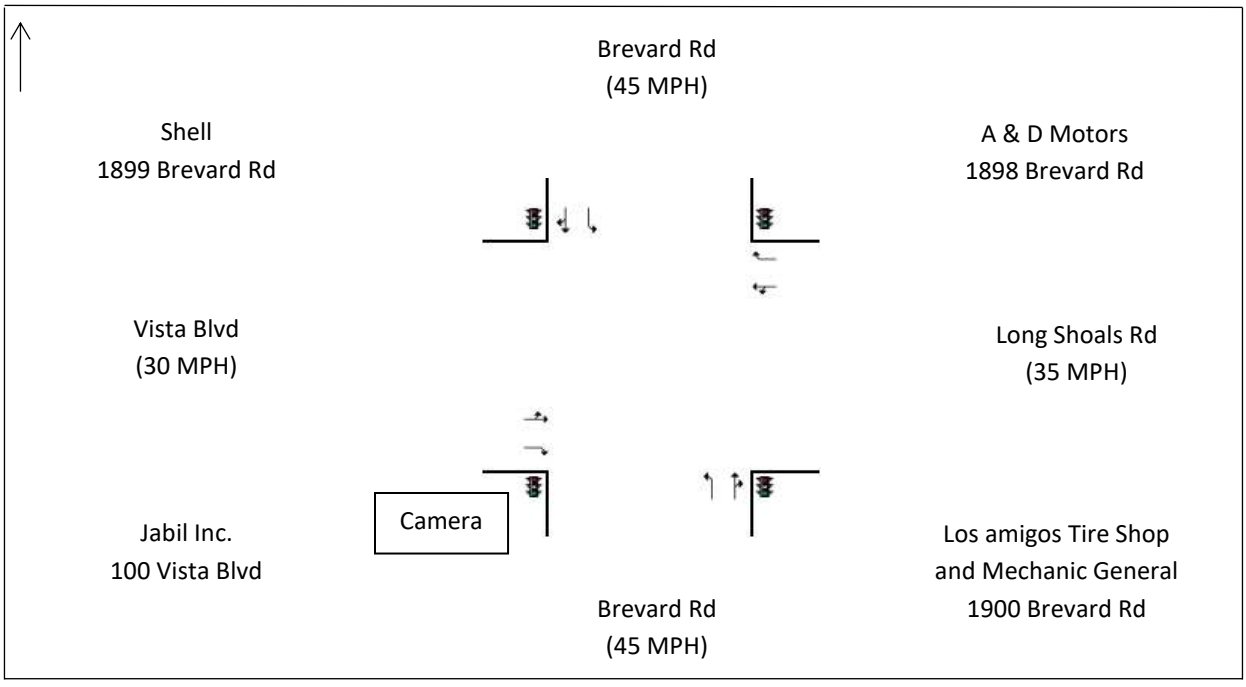

DocuSign Envelope ID: 5C03745C-4B01-4834-A65D-B77F558A4F46

Quality Counts

920 Blairhill Rd, Ste B-106
Charlotte, NC 28217

File Name : 15411714 - Brevard Rd -- Vista Blvd_Long Shoals Rd
Site Code : 15411714
Start Date : 4/20/2021
Page No : 1

Groups Printed- Classes 1, 2, 3 - Classes 4, 5, 6, 7 - Classes 8, 9, 10 - Classes 11, 12, 13

	Brevard Rd Southbound					Long Shoals Rd Westbound					Brevard Rd Northbound					Vista Blvd Eastbound					
Start Time	Left	Thru	Right	U-Turn	App. Total	Left	Thru	Right	U-Turn	App. Total	Left	Thru	Right	U-Turn	App. Total	Left	Thru	Right	U-Turn	App. Total	Int. Total
06:00 AM	9	17	3	0	29	5	11	9	0	25	5	15	16	0	36	0	0	2	0	2	92
06:15 AM	13	34	3	0	50	7	13	16	0	36	6	33	15	0	54	1	1	1	0	3	143
06:30 AM	17	39	11	0	67	15	12	33	0	60	13	48	22	0	83	0	0	2	0	2	212
06:45 AM	10	40	17	0	67	17	34	43	0	94	10	70	20	0	100	2	3	0	0	5	266
Total	49	130	34	0	213	44	70	101	0	215	34	166	73	0	273	3	4	5	0	12	713
07:00 AM	30	69	6	0	105	8	22	38	0	68	11	87	30	0	128	2	6	2	0	10	311
07:15 AM	35	67	13	0	115	20	26	71	0	117	7	133	42	0	182	5	5	2	0	12	426
07:30 AM	62	96	16	0	174	29	17	73	0	119	12	118	46	0	176	3	5	6	0	14	483
07:45 AM	51	89	9	0	149	32	29	61	0	122	18	109	52	0	179	5	4	3	0	12	462
Total	178	321	44	0	543	89	94	243	0	426	48	447	170	0	665	15	20	13	0	48	1682
08:00 AM	38	73	8	0	119	27	22	47	0	96	13	98	56	0	167	15	23	5	0	43	425
08:15 AM	30	78	2	0	110	36	27	62	0	125	4	90	39	0	133	6	8	7	0	21	389
08:30 AM	37	51	3	0	91	44	15	50	0	109	8	94	42	0	144	4	9	3	0	16	360
08:45 AM	25	55	2	0	82	34	15	53	0	102	6	82	55	0	143	7	10	4	0	21	348
Total	130	257	15	0	402	141	79	212	0	432	31	364	192	0	587	32	50	19	0	101	1522
09:00 AM	19	64	3	0	86	31	11	37	0	79	4	76	34	0	114	0	7	0	0	7	286
09:15 AM	30	51	5	0	86	39	19	27	0	85	4	56	38	0	98	2	13	1	0	16	285
09:30 AM	29	61	6	0	96	24	9	35	0	68	5	78	43	0	126	3	4	4	0	11	301
09:45 AM	22	52	1	0	75	27	11	30	0	68	9	64	43	0	116	2	5	3	0	10	269
Total	100	228	15	0	343	121	50	129	0	300	22	274	158	0	454	7	29	8	0	44	1141
10:00 AM	21	51	3	0	75	29	7	30	0	66	8	83	36	0	127	4	6	4	0	14	282
10:15 AM	20	53	1	0	74	29	10	28	0	67	3	57	35	0	95	4	5	7	0	16	252
10:30 AM	32	67	0	0	99	34	11	30	0	75	1	81	41	0	123	1	8	2	0	11	308
10:45 AM	28	55	2	0	85	39	7	31	0	77	6	70	32	0	108	3	6	4	0	13	283
Total	101	226	6	0	333	131	35	119	0	285	18	291	144	0	453	12	25	17	0	54	1125
11:00 AM	36	75	4	0	115	37	7	21	0	65	2	70	22	0	94	6	5	4	0	15	289
11:15 AM	30	64	1	0	95	29	9	30	0	68	6	57	48	0	111	8	11	4	0	23	297
11:30 AM	41	57	2	0	100	48	11	32	0	91	2	61	46	0	109	3	19	3	0	25	325
11:45 AM	48	67	4	0	119	31	13	31	0	75	5	70	42	0	117	9	12	6	0	27	338
Total	155	263	11	0	429	145	40	114	0	299	15	258	158	0	431	26	47	17	0	90	1249
12:00 PM	45	61	1	0	107	41	14	43	0	98	5	69	45	0	119	8	17	11	0	36	360
12:15 PM	40	66	2	0	108	38	13	52	0	103	9	76	44	0	129	3	15	4	0	22	362
12:30 PM	36	77	0	0	113	33	18	39	0	90	10	90	51	0	151	5	10	9	0	24	378
12:45 PM	34	73	3	0	110	36	14	48	0	98	5	74	47	0	126	8	11	5	0	24	358
Total	155	277	6	0	438	148	59	182	0	389	29	309	187	0	525	24	53	29	0	106	1458
01:00 PM	38	67	5	0	110	47	14	48	0	109	10	77	37	0	124	5	6	6	0	17	360
01:15 PM	27	73	5	0	105	46	11	44	0	101	7	90	39	0	136	3	10	8	0	21	363
01:30 PM	34	64	2	0	100	36	16	34	0	86	6	81	31	0	118	5	10	4	0	19	323
01:45 PM	31	77	3	0	111	48	4	42	0	94	8	87	40	0	135	6	5	6	0	17	357
Total	130	281	15	0	426	177	45	168	0	390	31	335	147	0	513	19	31	24	0	74	1403
02:00 PM	32	73	2	0	107	34	5	39	0	78	7	88	45	0	140	6	7	7	0	20	345
02:15 PM	37	80	2	0	119	26	14	43	0	83	6	100	42	0	148	6	7	4	0	17	367
02:30 PM	58	106	6	0	170	34	12	37	0	83	7	104	42	0	153	16	30	9	0	55	461
02:45 PM	46	103	3	0	152	43	17	45	0	105	11	81	41	0	133	13	8	9	0	30	420
Total	173	362	13	0	548	137	48	164	0	349	31	373	170	0	574	41	52	29	0	122	1593
03:00 PM	81	115	1	0	197	43	9	32	0	84	5	80	29	0	114	12	18	10	0	40	435
03:15 PM	51	105	0	0	156	53	8	37	0	98	5	74	34	0	113	4	10	7	0	21	388
03:30 PM	32	91	1	0	124	49	3	33	0	85	4	100	59	0	163	15	24	15	0	54	426

DocuSign Envelope ID: 5C03745C-4B01-4834-A65D-B77F558A4F46

Quality Counts

920 Blairhill Rd, Ste B-106
Charlotte, NC 28217

File Name : 15411714 - Brevard Rd -- Vista Blvd_Long Shoals Rd
Site Code : 15411714
Start Date : 4/20/2021

Groups Printed- Classes 1, 2, 3 - Classes 4, 5, 6, 7 - Classes 8, 9, 10 - Classes 11, 12, 13

	Brevard Rd Southbound					Long Shoals Rd Westbound					Brevard Rd Northbound					Vista Blvd Eastbound					
Start Time	Left	Thru	Right	U-Turn	App. Total	Left	Thru	Right	U-Turn	App. Total	Left	Thru	Right	U-Turn	App. Total	Left	Thru	Right	U-Turn	App. Total	Int. Total
03:45 PM	41	87	1	0	129	57	9	34	0	100	0	122	35	0	157	10	12	4	0	26	412
Total	205	398	3	0	606	202	29	136	0	367	14	376	157	0	547	41	64	36	0	141	1661
04:00 PM	29	100	0	0	129	49	4	32	0	85	7	95	40	0	142	10	17	7	0	34	390
04:15 PM	35	103	1	0	139	57	6	44	0	107	2	114	50	0	166	9	17	3	0	29	441
04:30 PM	41	80	1	0	122	51	3	40	0	94	4	98	36	0	138	20	20	11	0	51	405
04:45 PM	34	105	3	0	142	48	8	35	0	91	3	108	30	0	141	10	14	8	0	32	406
Total	139	388	5	0	532	205	21	151	0	377	16	415	156	0	587	49	68	29	0	146	1642
05:00 PM	59	90	2	0	151	42	9	36	0	87	3	106	38	0	147	12	25	10	0	47	432
05:15 PM	38	98	1	0	137	39	3	35	0	77	5	141	42	0	188	14	15	4	0	33	435
05:30 PM	25	98	2	0	125	54	9	42	0	105	2	122	24	0	148	7	11	9	0	27	405
05:45 PM	45	86	2	0	133	40	6	39	0	85	9	80	42	0	131	3	16	9	0	28	377
Total	167	372	7	0	546	175	27	152	0	354	19	449	146	0	614	36	67	32	0	135	1649
06:00 PM	30	94	1	0	125	42	4	36	0	82	4	86	31	0	121	5	11	7	0	23	351
06:15 PM	20	72	0	0	92	42	4	29	0	75	4	91	29	0	124	3	4	3	0	10	301
06:30 PM	23	67	0	0	90	22	5	24	0	51	2	59	18	0	79	6	4	1	0	11	231
06:45 PM	32	56	3	0	91	44	2	28	0	74	1	70	23	0	94	0	4	5	0	9	268
Total	105	289	4	0	398	150	15	117	0	282	11	306	101	0	418	14	23	16	0	53	1151
Grand Total	1787	3792	178	0	5757	1865	612	1988	0	4465	319	4363	1959	0	6641	319	533	274	0	1126	17989
Apprch %	31	65.9	3.1	0		41.8	13.7	44.5	0		4.8	65.7	29.5	0		28.3	47.3	24.3	0		
Total %	9.9	21.1	1	0	32	10.4	3.4	11.1	0	24.8	1.8	24.3	10.9	0	36.9	1.8	3	1.5	0	6.3	
Classes 1, 2, 3	1640	3506	158	0	5304	1549	529	1822	0	3900	301	4017	1711	0	6029	286	460	263	0	1009	16242
% Classes 1, 2, 3	91.8	92.5	88.8	0	92.1	83.1	86.4	91.6	0	87.3	94.4	92.1	87.3	0	90.8	89.7	86.3	96	0	89.6	90.3
Classes 4, 5, 6, 7	73	261	12	0	346	311	55	88	0	454	14	306	242	0	562	18	45	9	0	72	1434
% Classes 4, 5, 6, 7	4.1	6.9	6.7	0	6	16.7	9	4.4	0	10.2	4.4	7	12.4	0	8.5	5.6	8.4	3.3	0	6.4	8
Classes 8, 9, 10	74	25	8	0	107	5	28	78	0	111	4	40	6	0	50	15	28	2	0	45	313
% Classes 8, 9, 10	4.1	0.7	4.5	0	1.9	0.3	4.6	3.9	0	2.5	1.3	0.9	0.3	0	0.8	4.7	5.3	0.7	0	4	1.7
Classes 11, 12, 13	0	0	0	0	0	0	0	0	0	0	0	0	0	0	0	0	0	0	0	0	0
% Classes 11, 12, 13	0	0	0	0	0	0	0	0	0	0	0	0	0	0	0	0	0	0	0	0	0

DocuSign Envelope ID: 5C03745C-4B01-4834-A65D-B77F558A4F46

Quality Counts

920 Blairhill Rd, Ste B-106
Charlotte, NC 28217

File Name : 15411714 - Brevard Rd -- Vista Blvd_Long Shoals Rd
Site Code : 15411714
Start Date : 4/20/2021
Page No : 3

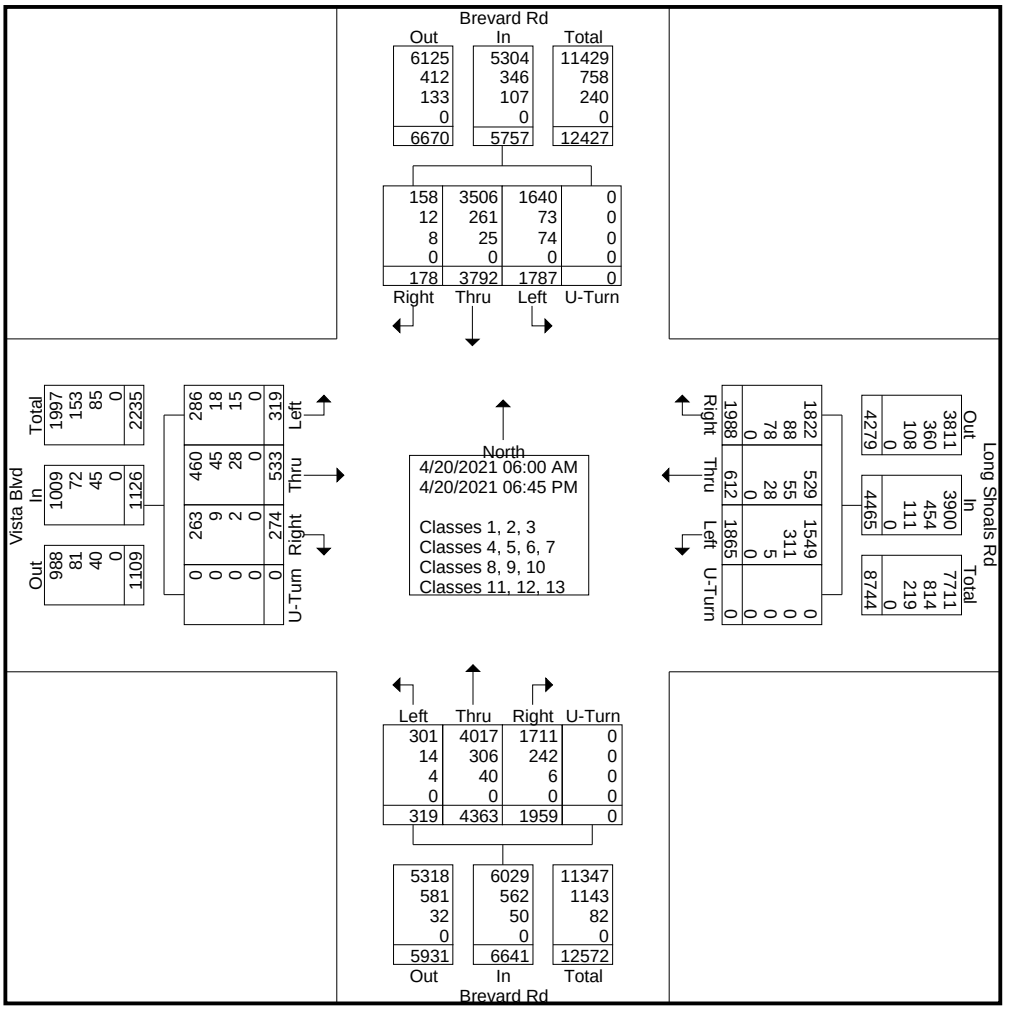

DocuSign Envelope ID: 5C03745C-4B01-4834-A65D-B77F558A4F46

Quality Counts

920 Blairhill Rd, Ste B-106
Charlotte, NC 28217

File Name : 15411714 - Brevard Rd -- Vista Blvd_Long Shoals Rd
Site Code : 15411714
Start Date : 4/20/2021
Page No : 4

	Brevard Rd Southbound					Long Shoals Rd Westbound					Brevard Rd Northbound					Vista Blvd Eastbound					
Start Time	Left	Thru	Right	U-Turn	App. Total	Left	Thru	Right	U-Turn	App. Total	Left	Thru	Right	U-Turn	App. Total	Left	Thru	Right	U-Turn	App. Total	Int. Total
Peak Hour Analysis From 06:00 AM to 11:45 AM - Peak 1 of 1																					
Peak Hour for Entire Intersection Begins at 07:15 AM																					
07:15 AM	35	67	13	0	115	20	26	71	0	117	7	**133**	42	0	**182**	5	5	2	0	12	426
07:30 AM	**62**	**96**	**16**	0	**174**	29	17	**73**	0	119	12	118	46	0	176	3	5	**6**	0	14	**483**
07:45 AM	51	89	9	0	149	**32**	**29**	61	0	**122**	**18**	109	52	0	179	5	4	3	0	12	462
08:00 AM	38	73	8	0	119	27	22	47	0	96	13	98	**56**	0	167	**15**	**23**	5	0	**43**	425
Total Volume	186	325	46	0	557	108	94	252	0	454	50	458	196	0	704	28	37	16	0	81	1796
% App. Total	33.4	58.3	8.3	0		23.8	20.7	55.5	0		7.1	65.1	27.8	0		34.6	45.7	19.8	0		
PHF	.750	.846	.719	.000	.800	.844	.810	.863	.000	.930	.694	.861	.875	.000	.967	.467	.402	.667	.000	.471	.930

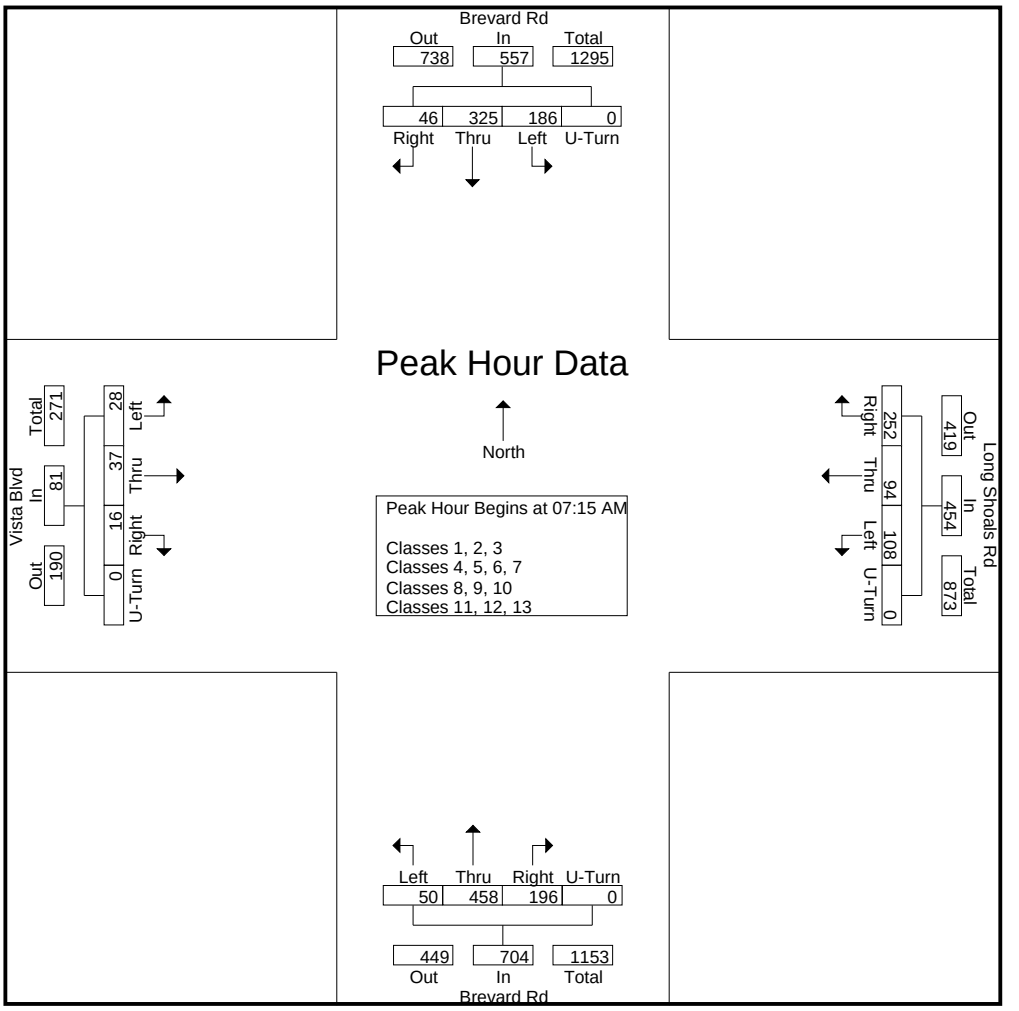

DocuSign Envelope ID: 5C03745C-4B01-4834-A65D-B77F558A4F46

Quality Counts

920 Blairhill Rd, Ste B-106
Charlotte, NC 28217

File Name : 15411714 - Brevard Rd -- Vista Blvd_Long Shoals Rd
Site Code : 15411714
Start Date : 4/20/2021
Page No : 5

	Brevard Rd Southbound					Long Shoals Rd Westbound					Brevard Rd Northbound					Vista Blvd Eastbound					
Start Time	Left	Thru	Right	U-Turn	App. Total	Left	Thru	Right	U-Turn	App. Total	Left	Thru	Right	U-Turn	App. Total	Left	Thru	Right	U-Turn	App. Total	Int. Total
Peak Hour Analysis From 12:00 PM to 06:45 PM - Peak 1 of 1																					
Peak Hour for Entire Intersection Begins at 02:30 PM																					
02:30 PM	58	106	**6**	0	170	34	12	37	0	83	7	**104**	**42**	0	**153**	**16**	**30**	9	0	**55**	**461**
02:45 PM	46	103	3	0	152	43	**17**	**45**	0	**105**	**11**	81	41	0	133	13	8	9	0	30	420
03:00 PM	**81**	**115**	1	0	**197**	43	9	32	0	84	5	80	29	0	114	12	18	**10**	0	40	435
03:15 PM	51	105	0	0	156	**53**	8	37	0	98	5	74	34	0	113	4	10	7	0	21	388
Total Volume	236	429	10	0	675	173	46	151	0	370	28	339	146	0	513	45	66	35	0	146	1704
% App. Total	35	63.6	1.5	0		46.8	12.4	40.8	0		5.5	66.1	28.5	0		30.8	45.2	24	0		
PHF	.728	.933	.417	.000	.857	.816	.676	.839	.000	.881	.636	.815	.869	.000	.838	.703	.550	.875	.000	.664	.924

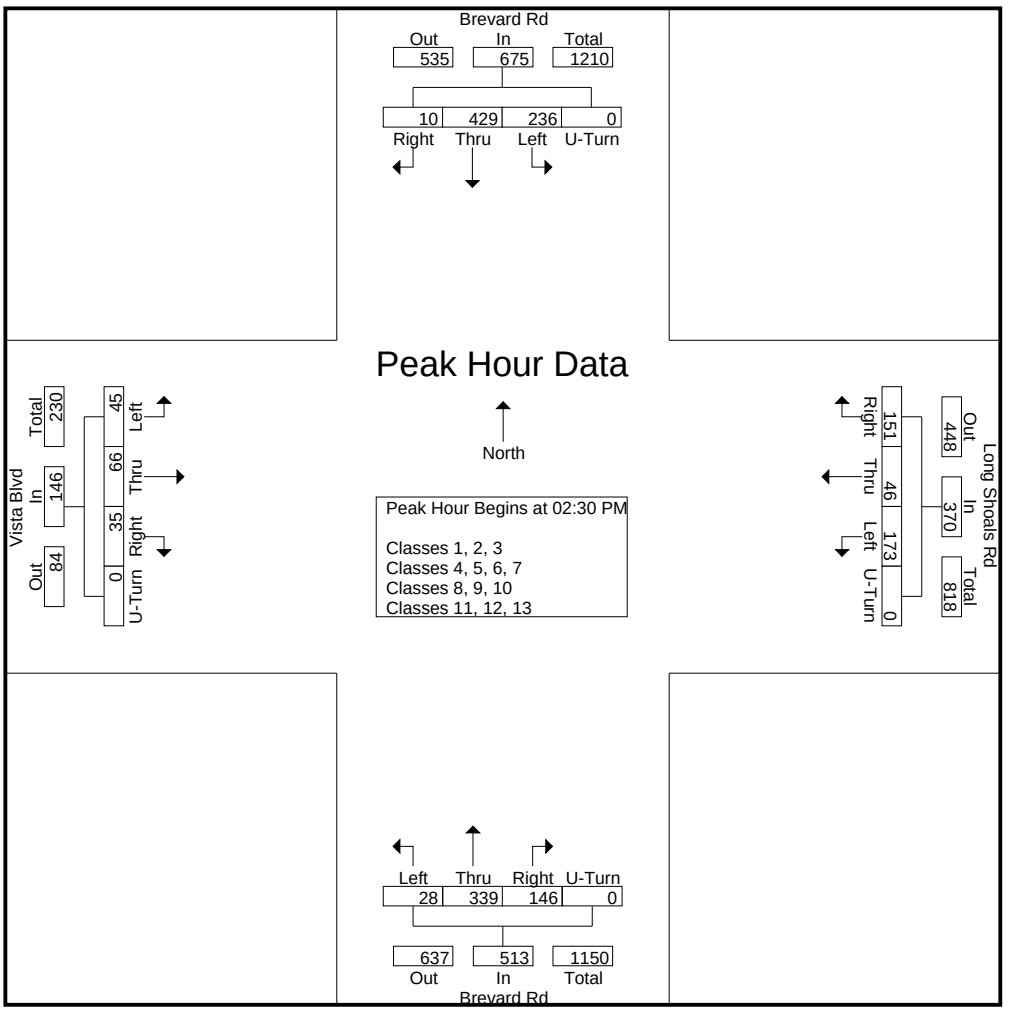

DocuSign Envelope ID: 5C03745C-4B01-4834-A65D-B77F558A4F46

Quality Counts

920 Blairhill Rd, Ste B-106
Charlotte, NC 28217

File Name : 15411714 - Brevard Rd -- Vista Blvd_Long Shoals Rd
Site Code : 15411714
Start Date : 4/20/2021
Page No : 1

Groups Printed- Classes 1, 2, 3

	Brevard Rd Southbound					Long Shoals Rd Westbound					Brevard Rd Northbound					Vista Blvd Eastbound					
Start Time	Left	Thru	Right	U-Turn	App. Total	Left	Thru	Right	U-Turn	App. Total	Left	Thru	Right	U-Turn	App. Total	Left	Thru	Right	U-Turn	App. Total	Int. Total
06:00 AM	8	14	3	0	25	5	10	8	0	23	5	14	16	0	35	0	0	2	0	2	85
06:15 AM	12	29	2	0	43	5	13	16	0	34	6	33	15	0	54	1	0	1	0	2	133
06:30 AM	15	36	11	0	62	15	12	30	0	57	13	48	22	0	83	0	0	2	0	2	204
06:45 AM	9	37	17	0	63	16	34	40	0	90	9	66	18	0	93	1	1	0	0	2	248
Total	44	116	33	0	193	41	69	94	0	204	33	161	71	0	265	2	1	5	0	8	670
07:00 AM	28	62	6	0	96	8	21	34	0	63	11	84	29	0	124	2	6	2	0	10	293
07:15 AM	35	64	13	0	112	16	26	65	0	107	7	126	41	0	174	3	3	2	0	8	401
07:30 AM	58	88	16	0	162	23	17	70	0	110	11	115	45	0	171	2	4	6	0	12	455
07:45 AM	45	78	9	0	132	24	27	59	0	110	17	101	45	0	163	4	3	3	0	10	415
Total	166	292	44	0	502	71	91	228	0	390	46	426	160	0	632	11	16	13	0	40	1564
08:00 AM	37	69	8	0	114	18	19	41	0	78	13	91	45	0	149	14	20	4	0	38	379
08:15 AM	28	67	2	0	97	28	25	59	0	112	4	86	37	0	127	4	5	7	0	16	352
08:30 AM	35	47	2	0	84	37	12	45	0	94	8	87	32	0	127	3	3	3	0	9	314
08:45 AM	21	45	2	0	68	24	13	49	0	86	6	71	49	0	126	7	7	4	0	18	298
Total	121	228	14	0	363	107	69	194	0	370	31	335	163	0	529	28	35	18	0	81	1343
09:00 AM	15	62	3	0	80	27	10	33	0	70	4	66	33	0	103	0	6	0	0	6	259
09:15 AM	29	37	4	0	70	32	16	23	0	71	3	53	27	0	83	2	9	1	0	12	236
09:30 AM	25	56	5	0	86	18	8	32	0	58	5	70	41	0	116	2	2	4	0	8	268
09:45 AM	18	46	1	0	65	16	8	29	0	53	8	59	37	0	104	1	4	3	0	8	230
Total	87	201	13	0	301	93	42	117	0	252	20	248	138	0	406	5	21	8	0	34	993
10:00 AM	20	46	3	0	69	20	4	25	0	49	6	71	31	0	108	3	5	4	0	12	238
10:15 AM	18	47	0	0	65	20	7	22	0	49	3	47	30	0	80	1	3	6	0	10	204
10:30 AM	29	54	0	0	83	27	8	26	0	61	1	73	31	0	105	1	4	2	0	7	256
10:45 AM	23	52	2	0	77	29	7	27	0	63	6	63	28	0	97	2	5	3	0	10	247
Total	90	199	5	0	294	96	26	100	0	222	16	254	120	0	390	7	17	15	0	39	945
11:00 AM	32	68	3	0	103	28	4	20	0	52	2	64	19	0	85	5	4	4	0	13	253
11:15 AM	28	55	1	0	84	20	8	27	0	55	6	47	39	0	92	7	11	4	0	22	253
11:30 AM	34	46	2	0	82	40	10	29	0	79	1	55	44	0	100	3	19	3	0	25	286
11:45 AM	43	63	2	0	108	25	10	28	0	63	5	62	29	0	96	7	9	6	0	22	289
Total	137	232	8	0	377	113	32	104	0	249	14	228	131	0	373	22	43	17	0	82	1081
12:00 PM	44	56	1	0	101	29	11	34	0	74	5	62	39	0	106	7	15	10	0	32	313
12:15 PM	37	59	1	0	97	25	12	49	0	86	8	72	40	0	120	3	13	4	0	20	323
12:30 PM	34	71	0	0	105	29	18	38	0	85	10	82	44	0	136	5	8	9	0	22	348
12:45 PM	30	67	3	0	100	26	12	45	0	83	5	68	42	0	115	8	9	4	0	21	319
Total	145	253	5	0	403	109	53	166	0	328	28	284	165	0	477	23	45	27	0	95	1303
01:00 PM	35	61	3	0	99	35	12	48	0	95	9	71	30	0	110	5	6	6	0	17	321
01:15 PM	23	69	5	0	97	39	9	39	0	87	6	83	28	0	117	3	8	8	0	19	320
01:30 PM	30	60	2	0	92	33	13	34	0	80	6	75	23	0	104	3	9	4	0	16	292
01:45 PM	30	71	2	0	103	42	4	39	0	85	8	79	32	0	119	5	4	6	0	15	322
Total	118	261	12	0	391	149	38	160	0	347	29	308	113	0	450	16	27	24	0	67	1255
02:00 PM	26	68	1	0	95	19	3	36	0	58	7	83	43	0	133	6	5	7	0	18	304
02:15 PM	35	70	2	0	107	24	12	39	0	75	5	92	35	0	132	5	6	3	0	14	328
02:30 PM	57	101	4	0	162	26	11	35	0	72	7	96	30	0	133	16	28	9	0	53	420
02:45 PM	44	99	3	0	146	40	10	41	0	91	10	74	36	0	120	12	8	8	0	28	385
Total	162	338	10	0	510	109	36	151	0	296	29	345	144	0	518	39	47	27	0	113	1437
03:00 PM	77	112	1	0	190	34	5	24	0	63	5	69	23	0	97	11	16	10	0	37	387
03:15 PM	45	96	0	0	141	42	5	29	0	76	4	66	32	0	102	4	9	6	0	19	338
03:30 PM	30	83	0	0	113	49	1	31	0	81	2	84	45	0	131	14	23	14	0	51	376

DocuSign Envelope ID: 5C03745C-4B01-4834-A65D-B77F558A4F46

Quality Counts

920 Blairhill Rd, Ste B-106
Charlotte, NC 28217

File Name : 15411714 - Brevard Rd -- Vista Blvd_Long Shoals Rd
Site Code : 15411714
Start Date : 4/20/2021
Page No : 2

Groups Printed- Classes 1, 2, 3

	Brevard Rd Southbound					Long Shoals Rd Westbound					Brevard Rd Northbound					Vista Blvd Eastbound					
Start Time	Left	Thru	Right	U-Turn	App. Total	Left	Thru	Right	U-Turn	App. Total	Left	Thru	Right	U-Turn	App. Total	Left	Thru	Right	U-Turn	App. Total	Int. Total
03:45 PM	38	78	1	0	117	47	8	32	0	87	0	111	30	0	141	9	12	4	0	25	370
Total	190	369	2	0	561	172	19	116	0	307	11	330	130	0	471	38	60	34	0	132	1471
04:00 PM	26	93	0	0	119	40	3	29	0	72	6	92	35	0	133	10	17	7	0	34	358
04:15 PM	30	97	1	0	128	54	4	42	0	100	2	103	43	0	148	8	13	3	0	24	400
04:30 PM	37	77	1	0	115	39	3	33	0	75	4	89	35	0	128	19	20	11	0	50	368
04:45 PM	32	104	2	0	138	46	7	34	0	87	3	98	27	0	128	10	14	8	0	32	385
Total	125	371	4	0	500	179	17	138	0	334	15	382	140	0	537	47	64	29	0	140	1511
05:00 PM	55	87	2	0	144	42	6	34	0	82	3	92	35	0	130	12	24	10	0	46	402
05:15 PM	36	97	0	0	133	36	3	35	0	74	5	132	42	0	179	13	13	4	0	30	416
05:30 PM	22	95	1	0	118	49	8	39	0	96	2	120	23	0	145	7	10	9	0	26	385
05:45 PM	43	84	1	0	128	39	5	35	0	79	9	77	38	0	124	3	14	9	0	26	357
Total	156	363	4	0	523	166	22	143	0	331	19	421	138	0	578	35	61	32	0	128	1560
06:00 PM	28	93	1	0	122	42	4	34	0	80	4	84	30	0	118	5	11	5	0	21	341
06:15 PM	17	71	0	0	88	39	4	28	0	71	4	89	27	0	120	3	4	3	0	10	289
06:30 PM	23	65	0	0	88	21	5	22	0	48	1	56	18	0	75	5	4	1	0	10	221
06:45 PM	31	54	3	0	88	42	2	27	0	71	1	66	23	0	90	0	4	5	0	9	258
Total	99	283	4	0	386	144	15	111	0	270	10	295	98	0	403	13	23	14	0	50	1109
Grand Total	1640	3506	158	0	5304	1549	529	1822	0	3900	301	4017	1711	0	6029	286	460	263	0	1009	16242
Apprch %	30.9	66.1	3	0		39.7	13.6	46.7	0		5	66.6	28.4	0		28.3	45.6	26.1	0		
Total %	10.1	21.6	1	0	32.7	9.5	3.3	11.2	0	24	1.9	24.7	10.5	0	37.1	1.8	2.8	1.6	0	6.2	

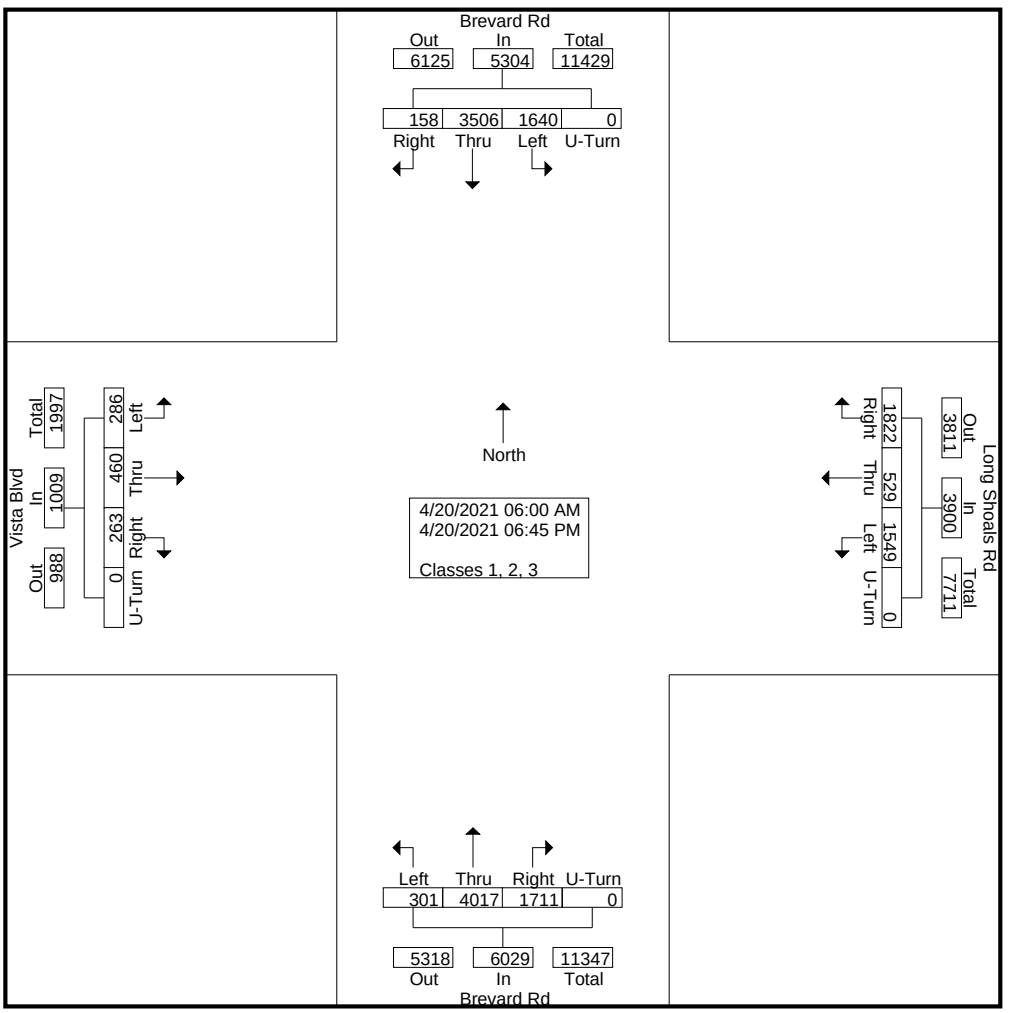

DocuSign Envelope ID: 5C03745C-4B01-4834-A65D-B77F558A4F46

Quality Counts

920 Blairhill Rd, Ste B-106
Charlotte, NC 28217

File Name : 15411714 - Brevard Rd -- Vista Blvd_Long Shoals Rd
Site Code : 15411714
Start Date : 4/20/2021

	Brevard Rd Southbound					Long Shoals Rd Westbound					Brevard Rd Northbound					Vista Blvd Eastbound					
Start Time	Left	Thru	Right	U-Turn	App. Total	Left	Thru	Right	U-Turn	App. Total	Left	Thru	Right	U-Turn	App. Total	Left	Thru	Right	U-Turn	App. Total	Int. Total
Peak Hour Analysis From 06:00 AM to 11:45 AM - Peak 1 of 1																					
Peak Hour for Entire Intersection Begins at 07:15 AM																					
07:15 AM	35	64	13	0	112	16	26	65	0	107	7	**126**	41	0	**174**	3	3	2	0	8	401
07:30 AM	**58**	**88**	**16**	0	**162**	23	17	**70**	0	**110**	11	115	**45**	0	171	2	4	**6**	0	12	**455**
07:45 AM	45	78	9	0	132	**24**	**27**	59	0	110	**17**	101	45	0	163	4	3	3	0	10	415
08:00 AM	37	69	8	0	114	18	19	41	0	78	13	91	45	0	149	**14**	**20**	4	0	**38**	379
Total Volume	175	299	46	0	520	81	89	235	0	405	48	433	176	0	657	23	30	15	0	68	1650
% App. Total	33.7	57.5	8.8	0		20	22	58	0		7.3	65.9	26.8	0		33.8	44.1	22.1	0		
PHF	.754	.849	.719	.000	.802	.844	.824	.839	.000	.920	.706	.859	.978	.000	.944	.411	.375	.625	.000	.447	.907

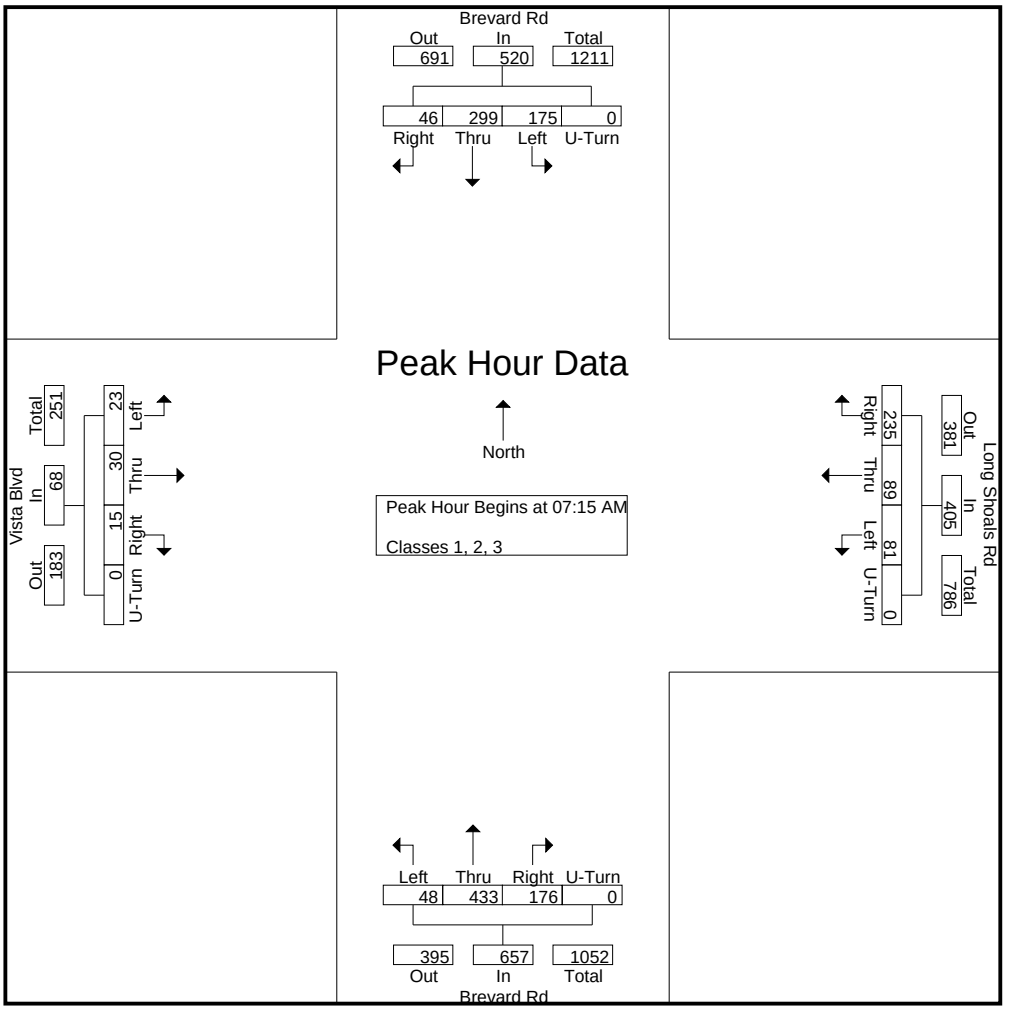

DocuSign Envelope ID: 5C03745C-4B01-4834-A65D-B77F558A4F46

Quality Counts

920 Blairhill Rd, Ste B-106
Charlotte, NC 28217

File Name : 15411714 - Brevard Rd -- Vista Blvd_Long Shoals Rd
Site Code : 15411714
Start Date : 4/20/2021
Page No : 4

	Brevard Rd Southbound					Long Shoals Rd Westbound					Brevard Rd Northbound					Vista Blvd Eastbound					
Start Time	Left	Thru	Right	U-Turn	App. Total	Left	Thru	Right	U-Turn	App. Total	Left	Thru	Right	U-Turn	App. Total	Left	Thru	Right	U-Turn	App. Total	Int. Total
Peak Hour Analysis From 12:00 PM to 06:45 PM - Peak 1 of 1																					
Peak Hour for Entire Intersection Begins at 04:45 PM																					
04:45 PM	32	**104**	**2**	0	138	46	7	34	0	87	3	98	27	0	128	10	14	8	0	32	385
05:00 PM	**55**	87	2	0	**144**	42	6	34	0	82	3	92	35	0	130	12	**24**	**10**	0	**46**	402
05:15 PM	36	97	0	0	133	36	3	35	0	74	**5**	**132**	**42**	0	**179**	**13**	13	4	0	30	**416**
05:30 PM	22	95	1	0	118	**49**	**8**	**39**	0	**96**	2	120	23	0	145	7	10	9	0	26	385
Total Volume	145	383	5	0	533	173	24	142	0	339	13	442	127	0	582	42	61	31	0	134	1588
% App. Total	27.2	71.9	0.9	0		51	7.1	41.9	0		2.2	75.9	21.8	0		31.3	45.5	23.1	0		
PHF	.659	.921	.625	.000	.925	.883	.750	.910	.000	.883	.650	.837	.756	.000	.813	.808	.635	.775	.000	.728	.954

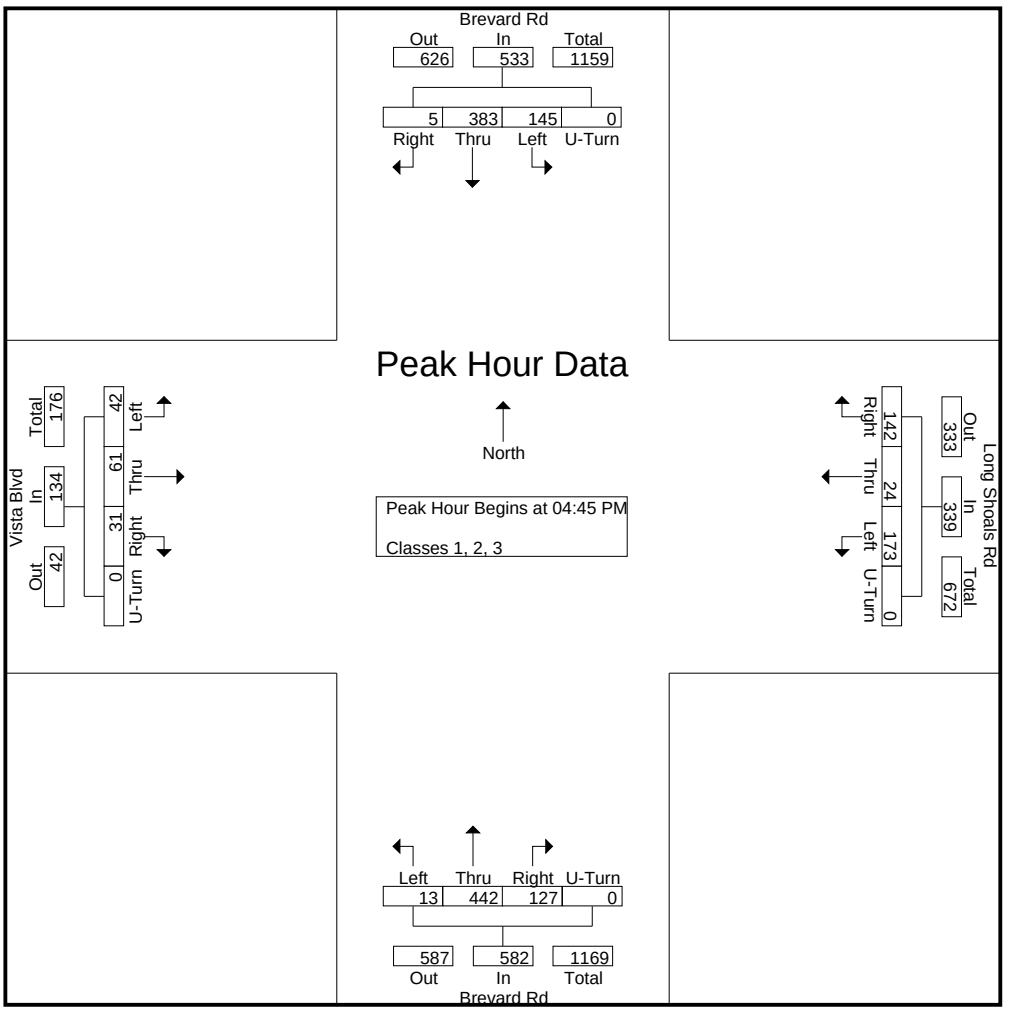

DocuSign Envelope ID: 5C03745C-4B01-4834-A65D-B77F558A4F46

Quality Counts

920 Blairhill Rd, Ste B-106
Charlotte, NC 28217

File Name : 15411714 - Brevard Rd -- Vista Blvd_Long Shoals Rd
Site Code : 15411714
Start Date : 4/20/2021
Page No : 1

Groups Printed- Classes 4, 5, 6, 7

	Brevard Rd Southbound					Long Shoals Rd Westbound					Brevard Rd Northbound					Vista Blvd Eastbound					
Start Time	Left	Thru	Right	U-Turn	App. Total	Left	Thru	Right	U-Turn	App. Total	Left	Thru	Right	U-Turn	App. Total	Left	Thru	Right	U-Turn	App. Total	Int. Total
06:00 AM	1	2	0	0	3	0	0	0	0	0	0	1	0	0	1	0	0	0	0	0	4
06:15 AM	0	4	1	0	5	2	0	0	0	2	0	0	0	0	0	0	1	0	0	1	8
06:30 AM	2	3	0	0	5	0	0	1	0	1	0	0	0	0	0	0	0	0	0	0	6
06:45 AM	1	3	0	0	4	0	0	0	0	0	1	4	2	0	7	1	1	0	0	2	13
Total	4	12	1	0	17	2	0	1	0	3	1	5	2	0	8	1	2	0	0	3	31
07:00 AM	2	7	0	0	9	0	0	1	0	1	0	2	1	0	3	0	0	0	0	0	13
07:15 AM	0	3	0	0	3	4	0	5	0	9	0	5	1	0	6	2	2	0	0	4	22
07:30 AM	3	8	0	0	11	6	0	1	0	7	0	3	1	0	4	1	1	0	0	2	24
07:45 AM	3	10	0	0	13	8	1	1	0	10	1	8	7	0	16	1	1	0	0	2	41
Total	8	28	0	0	36	18	1	8	0	27	1	18	10	0	29	4	4	0	0	8	100
08:00 AM	0	4	0	0	4	9	1	4	0	14	0	6	11	0	17	0	3	1	0	4	39
08:15 AM	1	11	0	0	12	8	2	1	0	11	0	4	2	0	6	2	2	0	0	4	33
08:30 AM	2	4	1	0	7	7	3	5	0	15	0	7	10	0	17	1	5	0	0	6	45
08:45 AM	0	8	0	0	8	10	2	1	0	13	0	11	6	0	17	0	3	0	0	3	41
Total	3	27	1	0	31	34	8	11	0	53	0	28	29	0	57	3	13	1	0	17	158
09:00 AM	2	2	0	0	4	4	0	0	0	4	0	9	1	0	10	0	0	0	0	0	18
09:15 AM	1	13	0	0	14	7	1	1	0	9	1	3	11	0	15	0	1	0	0	1	39
09:30 AM	2	4	0	0	6	6	1	1	0	8	0	8	2	0	10	1	2	0	0	3	27
09:45 AM	3	6	0	0	9	11	1	1	0	13	1	5	6	0	12	0	0	0	0	0	34
Total	8	25	0	0	33	28	3	3	0	34	2	25	20	0	47	1	3	0	0	4	118
10:00 AM	0	4	0	0	4	9	2	5	0	16	0	10	5	0	15	0	1	0	0	1	36
10:15 AM	2	6	1	0	9	9	1	2	0	12	0	8	5	0	13	1	1	1	0	3	37
10:30 AM	2	9	0	0	11	6	2	2	0	10	0	6	10	0	16	0	2	0	0	2	39
10:45 AM	1	2	0	0	3	10	0	2	0	12	0	7	4	0	11	1	0	0	0	1	27
Total	5	21	1	0	27	34	5	11	0	50	0	31	24	0	55	2	4	1	0	7	139
11:00 AM	1	6	1	0	8	9	2	1	0	12	0	5	2	0	7	1	0	0	0	1	28
11:15 AM	0	9	0	0	9	9	1	2	0	12	0	9	9	0	18	0	0	0	0	0	39
11:30 AM	3	11	0	0	14	8	1	2	0	11	1	6	2	0	9	0	0	0	0	0	34
11:45 AM	0	4	2	0	6	6	2	1	0	9	0	4	13	0	17	1	2	0	0	3	35
Total	4	30	3	0	37	32	6	6	0	44	1	24	26	0	51	2	2	0	0	4	136
12:00 PM	1	5	0	0	6	12	2	6	0	20	0	5	6	0	11	0	1	1	0	2	39
12:15 PM	2	7	0	0	9	12	1	1	0	14	1	4	4	0	9	0	2	0	0	2	34
12:30 PM	0	5	0	0	5	4	0	0	0	4	0	8	7	0	15	0	1	0	0	1	25
12:45 PM	4	6	0	0	10	9	2	2	0	13	0	4	5	0	9	0	1	1	0	2	34
Total	7	23	0	0	30	37	5	9	0	51	1	21	22	0	44	0	5	2	0	7	132
01:00 PM	2	6	2	0	10	12	1	0	0	13	1	6	6	0	13	0	0	0	0	0	36
01:15 PM	1	4	0	0	5	7	2	3	0	12	1	7	11	0	19	0	2	0	0	2	38
01:30 PM	3	4	0	0	7	2	1	0	0	3	0	6	8	0	14	1	0	0	0	1	25
01:45 PM	0	5	1	0	6	6	0	3	0	9	0	6	8	0	14	1	1	0	0	2	31
Total	6	19	3	0	28	27	4	6	0	37	2	25	33	0	60	2	3	0	0	5	130
02:00 PM	3	4	1	0	8	15	2	0	0	17	0	5	1	0	6	0	0	0	0	0	31
02:15 PM	1	10	0	0	11	2	2	1	0	5	1	6	7	0	14	1	1	1	0	3	33
02:30 PM	1	4	0	0	5	8	1	0	0	9	0	7	12	0	19	0	2	0	0	2	35
02:45 PM	2	3	0	0	5	3	5	3	0	11	1	5	5	0	11	0	0	1	0	1	28
Total	7	21	1	0	29	28	10	4	0	42	2	23	25	0	50	1	3	2	0	6	127
03:00 PM	4	3	0	0	7	9	3	5	0	17	0	11	6	0	17	0	1	0	0	1	42
03:15 PM	2	9	0	0	11	11	1	7	0	19	0	6	1	0	7	0	0	1	0	1	38
03:30 PM	2	5	0	0	7	0	2	0	0	2	2	15	14	0	31	0	1	0	0	1	41

DocuSign Envelope ID: 5C03745C-4B01-4834-A65D-B77F558A4F46

Quality Counts

920 Blairhill Rd, Ste B-106
Charlotte, NC 28217

File Name : 15411714 - Brevard Rd -- Vista Blvd_Long Shoals Rd
Site Code : 15411714
Start Date : 4/20/2021

Groups Printed- Classes 4, 5, 6, 7

	Brevard Rd Southbound					Long Shoals Rd Westbound					Brevard Rd Northbound					Vista Blvd Eastbound					
Start Time	Left	Thru	Right	U-Turn	App. Total	Left	Thru	Right	U-Turn	App. Total	Left	Thru	Right	U-Turn	App. Total	Left	Thru	Right	U-Turn	App. Total	Int. Total
03:45 PM	2	8	0	0	10	10	1	2	0	13	0	11	5	0	16	0	0	0	0	0	39
Total	10	25	0	0	35	30	7	14	0	51	2	43	26	0	71	0	2	1	0	3	160
04:00 PM	0	7	0	0	7	9	0	1	0	10	1	2	4	0	7	0	0	0	0	0	24
04:15 PM	2	5	0	0	7	3	2	2	0	7	0	10	6	0	16	0	2	0	0	2	32
04:30 PM	3	3	0	0	6	12	0	3	0	15	0	9	1	0	10	1	0	0	0	1	32
04:45 PM	1	1	1	0	3	2	1	0	0	3	0	8	3	0	11	0	0	0	0	0	17
Total	6	16	1	0	23	26	3	6	0	35	1	29	14	0	44	1	2	0	0	3	105
05:00 PM	2	3	0	0	5	0	2	1	0	3	0	13	3	0	16	0	1	0	0	1	25
05:15 PM	0	1	0	0	1	3	0	0	0	3	0	8	0	0	8	0	0	0	0	0	12
05:30 PM	1	3	0	0	4	5	0	2	0	7	0	2	1	0	3	0	0	0	0	0	14
05:45 PM	0	2	1	0	3	1	1	2	0	4	0	2	4	0	6	0	1	0	0	1	14
Total	3	9	1	0	13	9	3	5	0	17	0	25	8	0	33	0	2	0	0	2	65
06:00 PM	1	1	0	0	2	0	0	2	0	2	0	1	1	0	2	0	0	2	0	2	8
06:15 PM	1	1	0	0	2	3	0	1	0	4	0	2	2	0	4	0	0	0	0	0	10
06:30 PM	0	2	0	0	2	1	0	0	0	1	1	3	0	0	4	1	0	0	0	1	8
06:45 PM	0	1	0	0	1	2	0	1	0	3	0	3	0	0	3	0	0	0	0	0	7
Total	2	5	0	0	7	6	0	4	0	10	1	9	3	0	13	1	0	2	0	3	33
Grand Total	73	261	12	0	346	311	55	88	0	454	14	306	242	0	562	18	45	9	0	72	1434
Apprch %	21.1	75.4	3.5	0		68.5	12.1	19.4	0		2.5	54.4	43.1	0		25	62.5	12.5	0		
Total %	5.1	18.2	0.8	0	24.1	21.7	3.8	6.1	0	31.7	1	21.3	16.9	0	39.2	1.3	3.1	0.6	0	5	

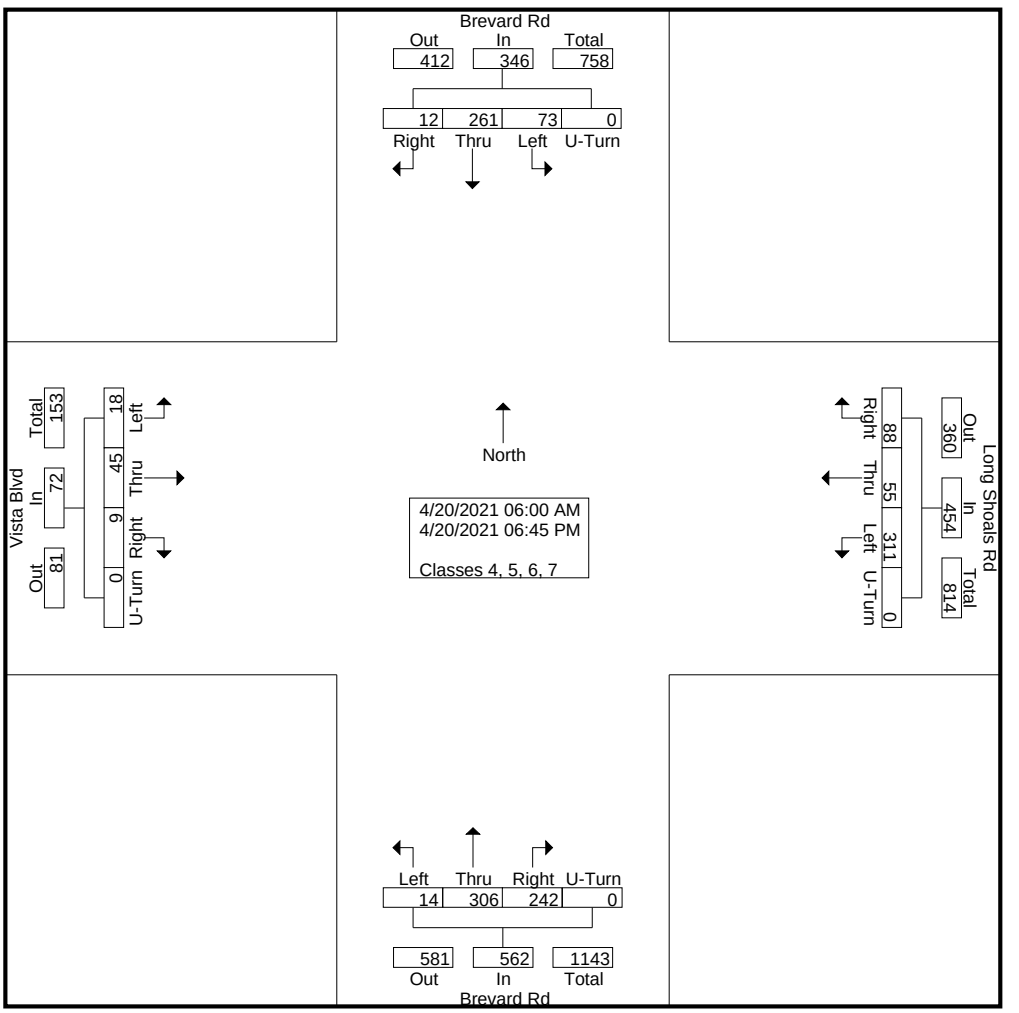

DocuSign Envelope ID: 5C03745C-4B01-4834-A65D-B77F558A4F46

Quality Counts

920 Blairhill Rd, Ste B-106
Charlotte, NC 28217

File Name : 15411714 - Brevard Rd -- Vista Blvd_Long Shoals Rd
Site Code : 15411714
Start Date : 4/20/2021
Page No : 3

	Brevard Rd Southbound					Long Shoals Rd Westbound					Brevard Rd Northbound					Vista Blvd Eastbound					
Start Time	Left	Thru	Right	U-Turn	App. Total	Left	Thru	Right	U-Turn	App. Total	Left	Thru	Right	U-Turn	App. Total	Left	Thru	Right	U-Turn	App. Total	Int. Total
Peak Hour Analysis From 06:00 AM to 11:45 AM - Peak 1 of 1																					
Peak Hour for Entire Intersection Begins at 07:45 AM																					
07:45 AM	**3**	10	0	0	**13**	8	1	1	0	10	**1**	**8**	7	0	16	1	1	0	0	2	41
08:00 AM	0	4	0	0	4	**9**	1	4	0	14	0	6	**11**	0	**17**	0	3	**1**	0	4	39
08:15 AM	1	**11**	0	0	12	8	2	1	0	11	0	4	2	0	6	**2**	2	0	0	4	33
08:30 AM	2	4	**1**	0	7	7	**3**	**5**	0	**15**	0	7	10	0	17	1	**5**	0	0	**6**	**45**
Total Volume	6	29	1	0	36	32	7	11	0	50	1	25	30	0	56	4	11	1	0	16	158
% App. Total	16.7	80.6	2.8	0		64	14	22	0		1.8	44.6	53.6	0		25	68.8	6.2	0		
PHF	.500	.659	.250	.000	.692	.889	.583	.550	.000	.833	.250	.781	.682	.000	.824	.500	.550	.250	.000	.667	.878

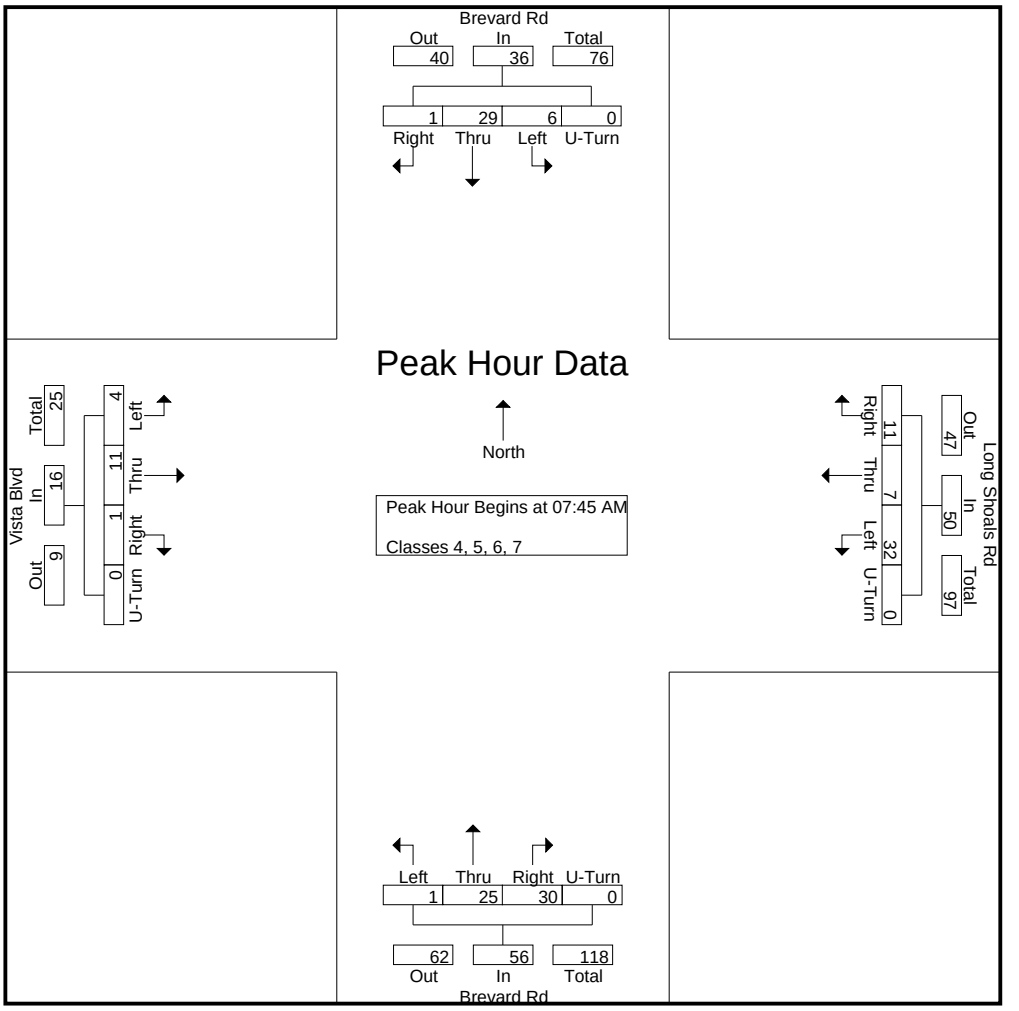

DocuSign Envelope ID: 5C03745C-4B01-4834-A65D-B77F558A4F46

Quality Counts

920 Blairhill Rd, Ste B-106
Charlotte, NC 28217

File Name : 15411714 - Brevard Rd -- Vista Blvd_Long Shoals Rd
Site Code : 15411714
Start Date : 4/20/2021
Page No : 4

	Brevard Rd Southbound					Long Shoals Rd Westbound					Brevard Rd Northbound					Vista Blvd Eastbound					
Start Time	Left	Thru	Right	U-Turn	App. Total	Left	Thru	Right	U-Turn	App. Total	Left	Thru	Right	U-Turn	App. Total	Left	Thru	Right	U-Turn	App. Total	Int. Total
Peak Hour Analysis From 12:00 PM to 06:45 PM - Peak 1 of 1																					
Peak Hour for Entire Intersection Begins at 03:00 PM																					
03:00 PM	**4**	3	0	0	7	9	**3**	5	0	17	0	11	6	0	17	0	**1**	0	0	**1**	**42**
03:15 PM	2	**9**	0	0	**11**	**11**	1	**7**	0	**19**	0	6	1	0	7	0	0	**1**	0	1	38
03:30 PM	2	5	0	0	7	0	2	0	0	2	**2**	**15**	**14**	0	**31**	0	1	0	0	1	41
03:45 PM	2	8	0	0	10	10	1	2	0	13	0	11	5	0	16	0	0	0	0	0	39
Total Volume	10	25	0	0	35	30	7	14	0	51	2	43	26	0	71	0	2	1	0	3	160
% App. Total	28.6	71.4	0	0		58.8	13.7	27.5	0		2.8	60.6	36.6	0		0	66.7	33.3	0		
PHF	.625	.694	.000	.000	.795	.682	.583	.500	.000	.671	.250	.717	.464	.000	.573	.000	.500	.250	.000	.750	.952

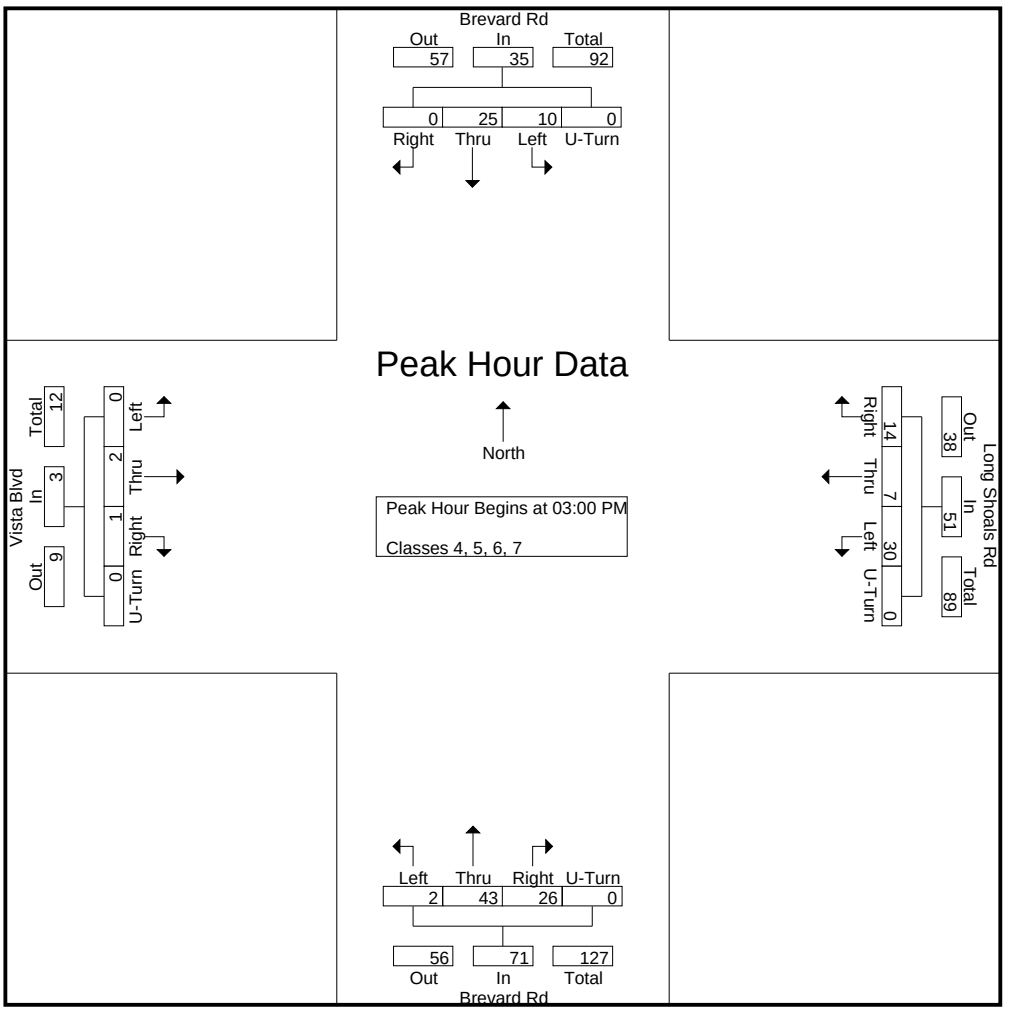

DocuSign Envelope ID: 5C03745C-4B01-4834-A65D-B77F558A4F46

Quality Counts

920 Blairhill Rd, Ste B-106
Charlotte, NC 28217

File Name : 15411714 - Brevard Rd -- Vista Blvd_Long Shoals Rd
Site Code : 15411714
Start Date : 4/20/2021
Page No : 1

Groups Printed- Classes 8, 9, 10

	Brevard Rd Southbound					Long Shoals Rd Westbound					Brevard Rd Northbound					Vista Blvd Eastbound					
Start Time	Left	Thru	Right	U-Turn	App. Total	Left	Thru	Right	U-Turn	App. Total	Left	Thru	Right	U-Turn	App. Total	Left	Thru	Right	U-Turn	App. Total	Int. Total
06:00 AM	0	1	0	0	1	0	1	1	0	2	0	0	0	0	0	0	0	0	0	0	3
06:15 AM	1	1	0	0	2	0	0	0	0	0	0	0	0	0	0	0	0	0	0	0	2
06:30 AM	0	0	0	0	0	0	0	2	0	2	0	0	0	0	0	0	0	0	0	0	2
06:45 AM	0	0	0	0	0	1	0	3	0	4	0	0	0	0	0	0	1	0	0	1	5
Total	1	2	0	0	3	1	1	6	0	8	0	0	0	0	0	0	1	0	0	1	12
07:00 AM	0	0	0	0	0	0	1	3	0	4	0	1	0	0	1	0	0	0	0	0	5
07:15 AM	0	0	0	0	0	0	0	1	0	1	0	2	0	0	2	0	0	0	0	0	3
07:30 AM	1	0	0	0	1	0	0	2	0	2	1	0	0	0	1	0	0	0	0	0	4
07:45 AM	3	1	0	0	4	0	1	1	0	2	0	0	0	0	0	0	0	0	0	0	6
Total	4	1	0	0	5	0	2	7	0	9	1	3	0	0	4	0	0	0	0	0	18
08:00 AM	1	0	0	0	1	0	2	2	0	4	0	1	0	0	1	1	0	0	0	1	7
08:15 AM	1	0	0	0	1	0	0	2	0	2	0	0	0	0	0	0	1	0	0	1	4
08:30 AM	0	0	0	0	0	0	0	0	0	0	0	0	0	0	0	0	1	0	0	1	1
08:45 AM	4	2	0	0	6	0	0	3	0	3	0	0	0	0	0	0	0	0	0	0	9
Total	6	2	0	0	8	0	2	7	0	9	0	1	0	0	1	1	2	0	0	3	21
09:00 AM	2	0	0	0	2	0	1	4	0	5	0	1	0	0	1	0	1	0	0	1	9
09:15 AM	0	1	1	0	2	0	2	3	0	5	0	0	0	0	0	0	3	0	0	3	10
09:30 AM	2	1	1	0	4	0	0	2	0	2	0	0	0	0	0	0	0	0	0	0	6
09:45 AM	1	0	0	0	1	0	2	0	0	2	0	0	0	0	0	1	1	0	0	2	5
Total	5	2	2	0	9	0	5	9	0	14	0	1	0	0	1	1	5	0	0	6	30
10:00 AM	1	1	0	0	2	0	1	0	0	1	2	2	0	0	4	1	0	0	0	1	8
10:15 AM	0	0	0	0	0	0	2	4	0	6	0	2	0	0	2	2	1	0	0	3	11
10:30 AM	1	4	0	0	5	1	1	2	0	4	0	2	0	0	2	0	2	0	0	2	13
10:45 AM	4	1	0	0	5	0	0	2	0	2	0	0	0	0	0	0	1	1	0	2	9
Total	6	6	0	0	12	1	4	8	0	13	2	6	0	0	8	3	4	1	0	8	41
11:00 AM	3	1	0	0	4	0	1	0	0	1	0	1	1	0	2	0	1	0	0	1	8
11:15 AM	2	0	0	0	2	0	0	1	0	1	0	1	0	0	1	1	0	0	0	1	5
11:30 AM	4	0	0	0	4	0	0	1	0	1	0	0	0	0	0	0	0	0	0	0	5
11:45 AM	5	0	0	0	5	0	1	2	0	3	0	4	0	0	4	1	1	0	0	2	14
Total	14	1	0	0	15	0	2	4	0	6	0	6	1	0	7	2	2	0	0	4	32
12:00 PM	0	0	0	0	0	0	1	3	0	4	0	2	0	0	2	1	1	0	0	2	8
12:15 PM	1	0	1	0	2	1	0	2	0	3	0	0	0	0	0	0	0	0	0	0	5
12:30 PM	2	1	0	0	3	0	0	1	0	1	0	0	0	0	0	0	1	0	0	1	5
12:45 PM	0	0	0	0	0	1	0	1	0	2	0	2	0	0	2	0	1	0	0	1	5
Total	3	1	1	0	5	2	1	7	0	10	0	4	0	0	4	1	3	0	0	4	23
01:00 PM	1	0	0	0	1	0	1	0	0	1	0	0	1	0	1	0	0	0	0	0	3
01:15 PM	3	0	0	0	3	0	0	2	0	2	0	0	0	0	0	0	0	0	0	0	5
01:30 PM	1	0	0	0	1	1	2	0	0	3	0	0	0	0	0	1	1	0	0	2	6
01:45 PM	1	1	0	0	2	0	0	0	0	0	0	2	0	0	2	0	0	0	0	0	4
Total	6	1	0	0	7	1	3	2	0	6	0	2	1	0	3	1	1	0	0	2	18
02:00 PM	3	1	0	0	4	0	0	3	0	3	0	0	1	0	1	0	2	0	0	2	10
02:15 PM	1	0	0	0	1	0	0	3	0	3	0	2	0	0	2	0	0	0	0	0	6
02:30 PM	0	1	2	0	3	0	0	2	0	2	0	1	0	0	1	0	0	0	0	0	6
02:45 PM	0	1	0	0	1	0	2	1	0	3	0	2	0	0	2	1	0	0	0	1	7
Total	4	3	2	0	9	0	2	9	0	11	0	5	1	0	6	1	2	0	0	3	29
03:00 PM	0	0	0	0	0	0	1	3	0	4	0	0	0	0	0	1	1	0	0	2	6
03:15 PM	4	0	0	0	4	0	2	1	0	3	1	2	1	0	4	0	1	0	0	1	12
03:30 PM	0	3	1	0	4	0	0	2	0	2	0	1	0	0	1	1	0	1	0	2	9

DocuSign Envelope ID: 5C03745C-4B01-4834-A65D-B77F558A4F46

Quality Counts

920 Blairhill Rd, Ste B-106
Charlotte, NC 28217

File Name : 15411714 - Brevard Rd -- Vista Blvd_Long Shoals Rd
Site Code : 15411714
Start Date : 4/20/2021

Groups Printed- Classes 8, 9, 10

	Brevard Rd Southbound					Long Shoals Rd Westbound					Brevard Rd Northbound					Vista Blvd Eastbound					
Start Time	Left	Thru	Right	U-Turn	App. Total	Left	Thru	Right	U-Turn	App. Total	Left	Thru	Right	U-Turn	App. Total	Left	Thru	Right	U-Turn	App. Total	Int. Total
03:45 PM	1	1	0	0	2	0	0	0	0	0	0	0	0	0	0	1	0	0	0	1	3
Total	5	4	1	0	10	0	3	6	0	9	1	3	1	0	5	3	2	1	0	6	30
04:00 PM	3	0	0	0	3	0	1	2	0	3	0	1	1	0	2	0	0	0	0	0	8
04:15 PM	3	1	0	0	4	0	0	0	0	0	0	1	1	0	2	1	2	0	0	3	9
04:30 PM	1	0	0	0	1	0	0	4	0	4	0	0	0	0	0	0	0	0	0	0	5
04:45 PM	1	0	0	0	1	0	0	1	0	1	0	2	0	0	2	0	0	0	0	0	4
Total	8	1	0	0	9	0	1	7	0	8	0	4	2	0	6	1	2	0	0	3	26
05:00 PM	2	0	0	0	2	0	1	1	0	2	0	1	0	0	1	0	0	0	0	0	5
05:15 PM	2	0	1	0	3	0	0	0	0	0	0	1	0	0	1	1	2	0	0	3	7
05:30 PM	2	0	1	0	3	0	1	1	0	2	0	0	0	0	0	0	1	0	0	1	6
05:45 PM	2	0	0	0	2	0	0	2	0	2	0	1	0	0	1	0	1	0	0	1	6
Total	8	0	2	0	10	0	2	4	0	6	0	3	0	0	3	1	4	0	0	5	24
06:00 PM	1	0	0	0	1	0	0	0	0	0	0	1	0	0	1	0	0	0	0	0	2
06:15 PM	2	0	0	0	2	0	0	0	0	0	0	0	0	0	0	0	0	0	0	0	2
06:30 PM	0	0	0	0	0	0	0	2	0	2	0	0	0	0	0	0	0	0	0	0	2
06:45 PM	1	1	0	0	2	0	0	0	0	0	0	1	0	0	1	0	0	0	0	0	3
Total	4	1	0	0	5	0	0	2	0	2	0	2	0	0	2	0	0	0	0	0	9
Grand Total	74	25	8	0	107	5	28	78	0	111	4	40	6	0	50	15	28	2	0	45	313
Apprch %	69.2	23.4	7.5	0		4.5	25.2	70.3	0		8	80	12	0		33.3	62.2	4.4	0		
Total %	23.6	8	2.6	0	34.2	1.6	8.9	24.9	0	35.5	1.3	12.8	1.9	0	16	4.8	8.9	0.6	0	14.4	

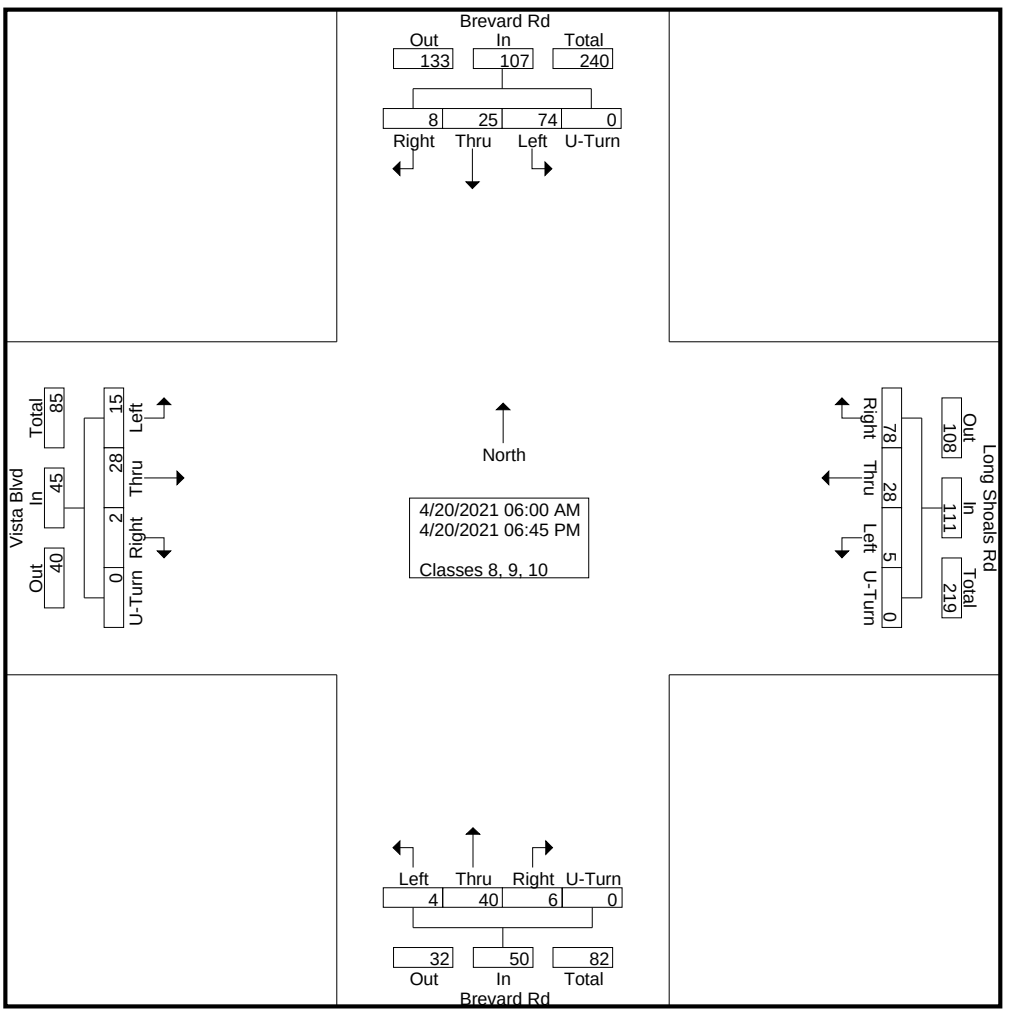

DocuSign Envelope ID: 5C03745C-4B01-4834-A65D-B77F558A4F46

Quality Counts

920 Blairhill Rd, Ste B-106
Charlotte, NC 28217

File Name : 15411714 - Brevard Rd -- Vista Blvd_Long Shoals Rd
Site Code : 15411714
Start Date : 4/20/2021
Page No : 3

	Brevard Rd Southbound					Long Shoals Rd Westbound					Brevard Rd Northbound					Vista Blvd Eastbound					
Start Time	Left	Thru	Right	U-Turn	App. Total	Left	Thru	Right	U-Turn	App. Total	Left	Thru	Right	U-Turn	App. Total	Left	Thru	Right	U-Turn	App. Total	Int. Total
Peak Hour Analysis From 06:00 AM to 11:45 AM - Peak 1 of 1																					
Peak Hour for Entire Intersection Begins at 10:00 AM																					
10:00 AM	1	1	0	0	2	0	1	0	0	1	**2**	**2**	0	0	**4**	1	0	0	0	1	8
10:15 AM	0	0	0	0	0	0	**2**	**4**	0	**6**	0	2	0	0	2	**2**	1	0	0	**3**	11
10:30 AM	1	**4**	0	0	**5**	**1**	1	2	0	4	0	2	0	0	2	0	**2**	0	0	2	**13**
10:45 AM	**4**	1	0	0	5	0	0	2	0	2	0	0	0	0	0	0	1	**1**	0	2	9
Total Volume	6	6	0	0	12	1	4	8	0	13	2	6	0	0	8	3	4	1	0	8	41
% App. Total	50	50	0	0		7.7	30.8	61.5	0		25	75	0	0		37.5	50	12.5	0		
PHF	.375	.375	.000	.000	.600	.250	.500	.500	.000	.542	.250	.750	.000	.000	.500	.375	.500	.250	.000	.667	.788

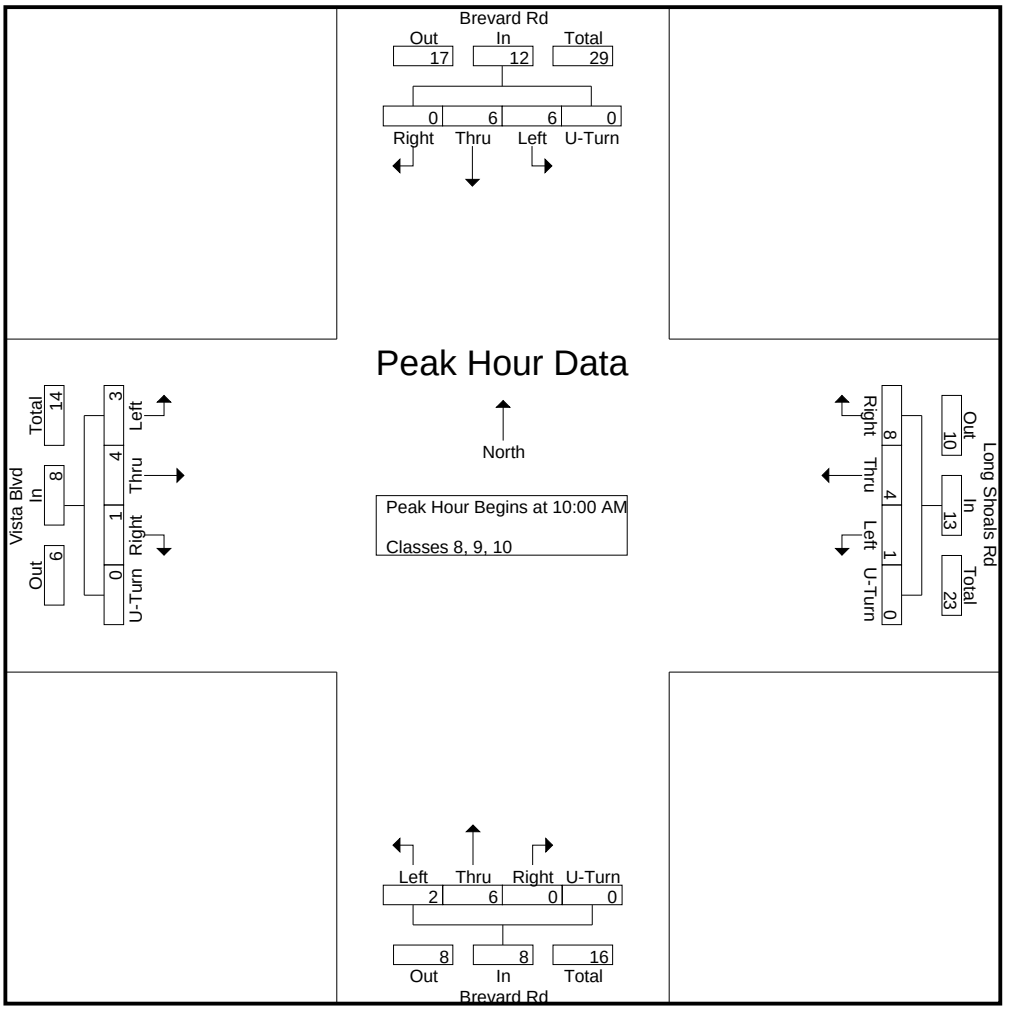

DocuSign Envelope ID: 5C03745C-4B01-4834-A65D-B77F558A4F46

Quality Counts

920 Blairhill Rd, Ste B-106
Charlotte, NC 28217

File Name : 15411714 - Brevard Rd -- Vista Blvd_Long Shoals Rd
Site Code : 15411714
Start Date : 4/20/2021

	Brevard Rd Southbound					Long Shoals Rd Westbound					Brevard Rd Northbound					Vista Blvd Eastbound					
Start Time	Left	Thru	Right	U-Turn	App. Total	Left	Thru	Right	U-Turn	App. Total	Left	Thru	Right	U-Turn	App. Total	Left	Thru	Right	U-Turn	App. Total	Int. Total
Peak Hour Analysis From 12:00 PM to 06:45 PM - Peak 1 of 1																					
Peak Hour for Entire Intersection Begins at 02:45 PM																					
02:45 PM	0	1	0	0	1	0	**2**	1	0	3	0	**2**	0	0	2	**1**	0	0	0	1	7
03:00 PM	0	0	0	0	0	0	1	**3**	0	**4**	0	0	0	0	0	1	**1**	0	0	**2**	6
03:15 PM	**4**	0	0	0	**4**	0	2	1	0	3	**1**	2	**1**	0	**4**	0	1	0	0	1	**12**
03:30 PM	0	**3**	**1**	0	4	0	0	2	0	2	0	1	0	0	1	1	0	**1**	0	2	9
Total Volume	4	4	1	0	9	0	5	7	0	12	1	5	1	0	7	3	2	1	0	6	34
% App. Total	44.4	44.4	11.1	0		0	41.7	58.3	0		14.3	71.4	14.3	0		50	33.3	16.7	0		
PHF	.250	.333	.250	.000	.563	.000	.625	.583	.000	.750	.250	.625	.250	.000	.438	.750	.500	.250	.000	.750	.708

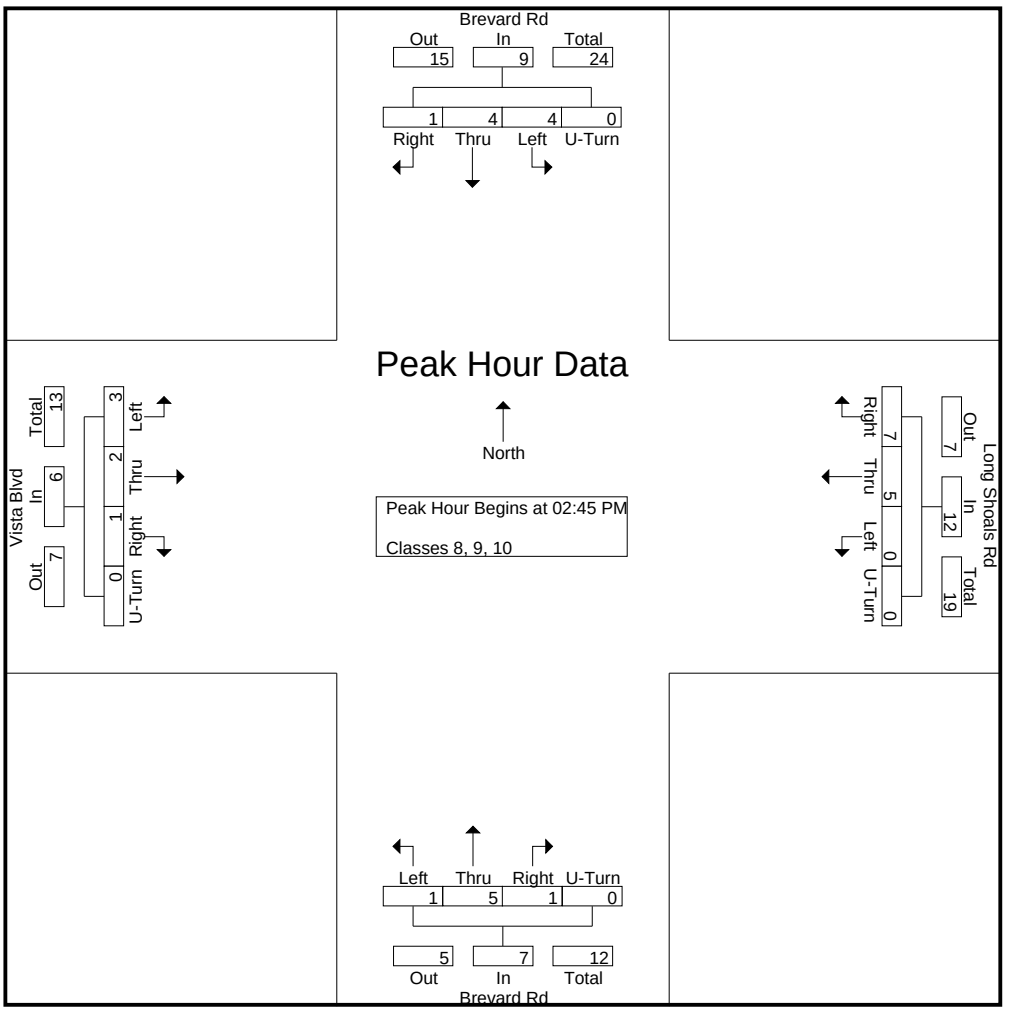

DocuSign Envelope ID: 5C03745C-4B01-4834-A65D-B77F558A4F46

Quality Counts

920 Blairhill Rd, Ste B-106
Charlotte, NC 28217

File Name : 15411714 - Brevard Rd -- Vista Blvd_Long Shoals Rd
Site Code : 15411714
Start Date : 4/20/2021
Page No : 1

Groups Printed- Classes 11, 12, 13

	Brevard Rd Southbound					Long Shoals Rd Westbound					Brevard Rd Northbound					Vista Blvd Eastbound					
Start Time	Left	Thru	Right	U-Turn	App. Total	Left	Thru	Right	U-Turn	App. Total	Left	Thru	Right	U-Turn	App. Total	Left	Thru	Right	U-Turn	App. Total	Int. Total
06:00 AM	0	0	0	0	0	0	0	0	0	0	0	0	0	0	0	0	0	0	0	0	0
06:15 AM	0	0	0	0	0	0	0	0	0	0	0	0	0	0	0	0	0	0	0	0	0
06:30 AM	0	0	0	0	0	0	0	0	0	0	0	0	0	0	0	0	0	0	0	0	0
06:45 AM	0	0	0	0	0	0	0	0	0	0	0	0	0	0	0	0	0	0	0	0	0
Total	0	0	0	0	0	0	0	0	0	0	0	0	0	0	0	0	0	0	0	0	0
07:00 AM	0	0	0	0	0	0	0	0	0	0	0	0	0	0	0	0	0	0	0	0	0
07:15 AM	0	0	0	0	0	0	0	0	0	0	0	0	0	0	0	0	0	0	0	0	0
07:30 AM	0	0	0	0	0	0	0	0	0	0	0	0	0	0	0	0	0	0	0	0	0
07:45 AM	0	0	0	0	0	0	0	0	0	0	0	0	0	0	0	0	0	0	0	0	0
Total	0	0	0	0	0	0	0	0	0	0	0	0	0	0	0	0	0	0	0	0	0
08:00 AM	0	0	0	0	0	0	0	0	0	0	0	0	0	0	0	0	0	0	0	0	0
08:15 AM	0	0	0	0	0	0	0	0	0	0	0	0	0	0	0	0	0	0	0	0	0
08:30 AM	0	0	0	0	0	0	0	0	0	0	0	0	0	0	0	0	0	0	0	0	0
08:45 AM	0	0	0	0	0	0	0	0	0	0	0	0	0	0	0	0	0	0	0	0	0
Total	0	0	0	0	0	0	0	0	0	0	0	0	0	0	0	0	0	0	0	0	0
09:00 AM	0	0	0	0	0	0	0	0	0	0	0	0	0	0	0	0	0	0	0	0	0
09:15 AM	0	0	0	0	0	0	0	0	0	0	0	0	0	0	0	0	0	0	0	0	0
09:30 AM	0	0	0	0	0	0	0	0	0	0	0	0	0	0	0	0	0	0	0	0	0
09:45 AM	0	0	0	0	0	0	0	0	0	0	0	0	0	0	0	0	0	0	0	0	0
Total	0	0	0	0	0	0	0	0	0	0	0	0	0	0	0	0	0	0	0	0	0
10:00 AM	0	0	0	0	0	0	0	0	0	0	0	0	0	0	0	0	0	0	0	0	0
10:15 AM	0	0	0	0	0	0	0	0	0	0	0	0	0	0	0	0	0	0	0	0	0
10:30 AM	0	0	0	0	0	0	0	0	0	0	0	0	0	0	0	0	0	0	0	0	0
10:45 AM	0	0	0	0	0	0	0	0	0	0	0	0	0	0	0	0	0	0	0	0	0
Total	0	0	0	0	0	0	0	0	0	0	0	0	0	0	0	0	0	0	0	0	0
11:00 AM	0	0	0	0	0	0	0	0	0	0	0	0	0	0	0	0	0	0	0	0	0
11:15 AM	0	0	0	0	0	0	0	0	0	0	0	0	0	0	0	0	0	0	0	0	0
11:30 AM	0	0	0	0	0	0	0	0	0	0	0	0	0	0	0	0	0	0	0	0	0
11:45 AM	0	0	0	0	0	0	0	0	0	0	0	0	0	0	0	0	0	0	0	0	0
Total	0	0	0	0	0	0	0	0	0	0	0	0	0	0	0	0	0	0	0	0	0
12:00 PM	0	0	0	0	0	0	0	0	0	0	0	0	0	0	0	0	0	0	0	0	0
12:15 PM	0	0	0	0	0	0	0	0	0	0	0	0	0	0	0	0	0	0	0	0	0
12:30 PM	0	0	0	0	0	0	0	0	0	0	0	0	0	0	0	0	0	0	0	0	0
12:45 PM	0	0	0	0	0	0	0	0	0	0	0	0	0	0	0	0	0	0	0	0	0
Total	0	0	0	0	0	0	0	0	0	0	0	0	0	0	0	0	0	0	0	0	0
01:00 PM	0	0	0	0	0	0	0	0	0	0	0	0	0	0	0	0	0	0	0	0	0
01:15 PM	0	0	0	0	0	0	0	0	0	0	0	0	0	0	0	0	0	0	0	0	0
01:30 PM	0	0	0	0	0	0	0	0	0	0	0	0	0	0	0	0	0	0	0	0	0
01:45 PM	0	0	0	0	0	0	0	0	0	0	0	0	0	0	0	0	0	0	0	0	0
Total	0	0	0	0	0	0	0	0	0	0	0	0	0	0	0	0	0	0	0	0	0
02:00 PM	0	0	0	0	0	0	0	0	0	0	0	0	0	0	0	0	0	0	0	0	0
02:15 PM	0	0	0	0	0	0	0	0	0	0	0	0	0	0	0	0	0	0	0	0	0
02:30 PM	0	0	0	0	0	0	0	0	0	0	0	0	0	0	0	0	0	0	0	0	0
02:45 PM	0	0	0	0	0	0	0	0	0	0	0	0	0	0	0	0	0	0	0	0	0
Total	0	0	0	0	0	0	0	0	0	0	0	0	0	0	0	0	0	0	0	0	0
03:00 PM	0	0	0	0	0	0	0	0	0	0	0	0	0	0	0	0	0	0	0	0	0
03:15 PM	0	0	0	0	0	0	0	0	0	0	0	0	0	0	0	0	0	0	0	0	0
03:30 PM	0	0	0	0	0	0	0	0	0	0	0	0	0	0	0	0	0	0	0	0	0

DocuSign Envelope ID: 5C03745C-4B01-4834-A65D-B77F558A4F46

Quality Counts

920 Blairhill Rd, Ste B-106
Charlotte, NC 28217

File Name : 15411714 - Brevard Rd -- Vista Blvd_Long Shoals Rd
Site Code : 15411714
Start Date : 4/20/2021

Groups Printed- Classes 11, 12, 13

	Brevard Rd Southbound					Long Shoals Rd Westbound					Brevard Rd Northbound					Vista Blvd Eastbound					
Start Time	Left	Thru	Right	U-Turn	App. Total	Left	Thru	Right	U-Turn	App. Total	Left	Thru	Right	U-Turn	App. Total	Left	Thru	Right	U-Turn	App. Total	Int. Total
03:45 PM	0	0	0	0	0	0	0	0	0	0	0	0	0	0	0	0	0	0	0	0	0
Total	0	0	0	0	0	0	0	0	0	0	0	0	0	0	0	0	0	0	0	0	0
04:00 PM	0	0	0	0	0	0	0	0	0	0	0	0	0	0	0	0	0	0	0	0	0
04:15 PM	0	0	0	0	0	0	0	0	0	0	0	0	0	0	0	0	0	0	0	0	0
04:30 PM	0	0	0	0	0	0	0	0	0	0	0	0	0	0	0	0	0	0	0	0	0
04:45 PM	0	0	0	0	0	0	0	0	0	0	0	0	0	0	0	0	0	0	0	0	0
Total	0	0	0	0	0	0	0	0	0	0	0	0	0	0	0	0	0	0	0	0	0
05:00 PM	0	0	0	0	0	0	0	0	0	0	0	0	0	0	0	0	0	0	0	0	0
05:15 PM	0	0	0	0	0	0	0	0	0	0	0	0	0	0	0	0	0	0	0	0	0
05:30 PM	0	0	0	0	0	0	0	0	0	0	0	0	0	0	0	0	0	0	0	0	0
05:45 PM	0	0	0	0	0	0	0	0	0	0	0	0	0	0	0	0	0	0	0	0	0
Total	0	0	0	0	0	0	0	0	0	0	0	0	0	0	0	0	0	0	0	0	0
06:00 PM	0	0	0	0	0	0	0	0	0	0	0	0	0	0	0	0	0	0	0	0	0
06:15 PM	0	0	0	0	0	0	0	0	0	0	0	0	0	0	0	0	0	0	0	0	0
06:30 PM	0	0	0	0	0	0	0	0	0	0	0	0	0	0	0	0	0	0	0	0	0
06:45 PM	0	0	0	0	0	0	0	0	0	0	0	0	0	0	0	0	0	0	0	0	0
Total	0	0	0	0	0	0	0	0	0	0	0	0	0	0	0	0	0	0	0	0	0
Grand Total	0	0	0	0	0	0	0	0	0	0	0	0	0	0	0	0	0	0	0	0	0
Apprch %	0	0	0	0		0	0	0	0		0	0	0	0		0	0	0	0		
Total %																					

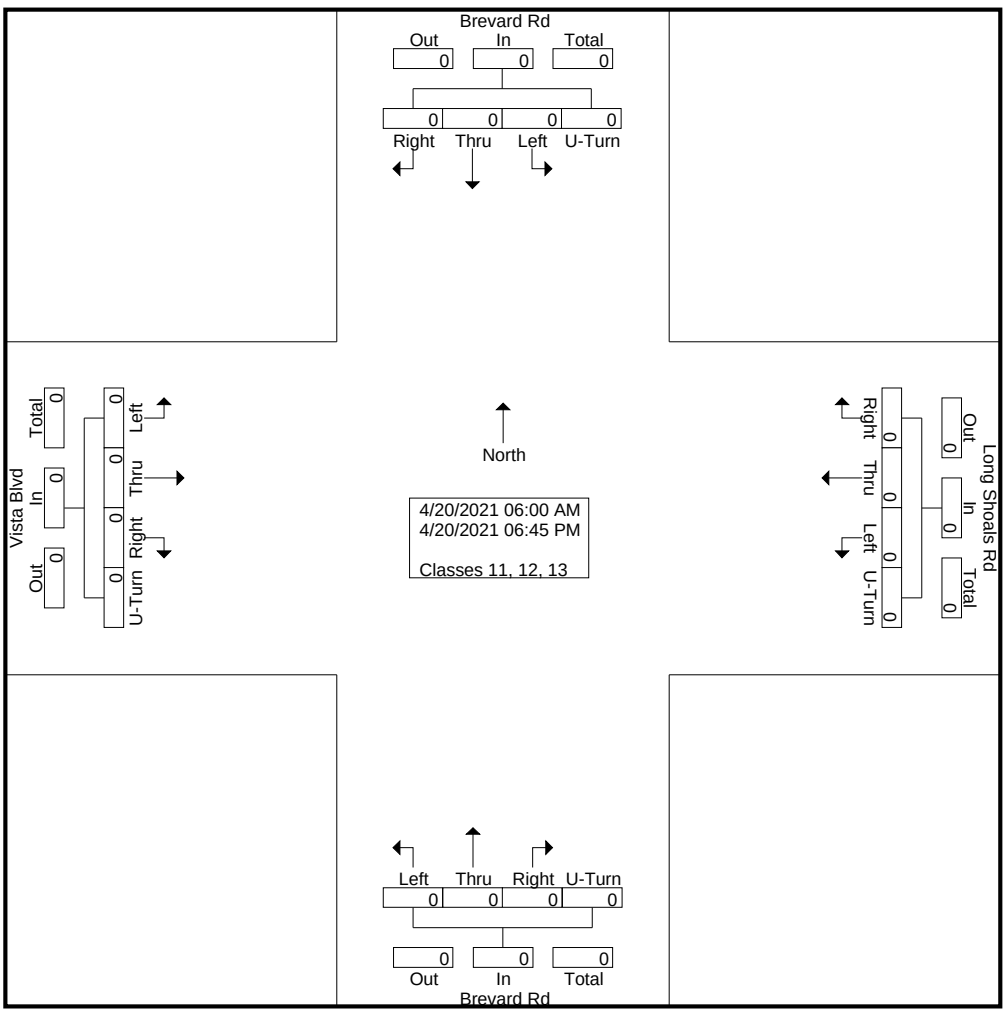

DocuSign Envelope ID: 5C03745C-4B01-4834-A65D-B77F558A4F46

Quality Counts

920 Blairhill Rd, Ste B-106
Charlotte, NC 28217

File Name : 15411714 - Brevard Rd -- Vista Blvd_Long Shoals Rd
Site Code : 15411714
Start Date : 4/20/2021

	Brevard Rd Southbound					Long Shoals Rd Westbound					Brevard Rd Northbound					Vista Blvd Eastbound					
Start Time	Left	Thru	Right	U-Turn	App. Total	Left	Thru	Right	U-Turn	App. Total	Left	Thru	Right	U-Turn	App. Total	Left	Thru	Right	U-Turn	App. Total	Int. Total
Peak Hour Analysis From 06:00 AM to 11:45 AM - Peak 1 of 1																					
Peak Hour for Entire Intersection Begins at 06:00 AM																					
06:00 AM	0	0	0	0	0	0	0	0	0	0	0	0	0	0	0	0	0	0	0	0	0
06:15 AM	0	0	0	0	0	0	0	0	0	0	0	0	0	0	0	0	0	0	0	0	0
06:30 AM	0	0	0	0	0	0	0	0	0	0	0	0	0	0	0	0	0	0	0	0	0
06:45 AM	0	0	0	0	0	0	0	0	0	0	0	0	0	0	0	0	0	0	0	0	0
Total Volume	0	0	0	0	0	0	0	0	0	0	0	0	0	0	0	0	0	0	0	0	0
% App. Total	0	0	0	0		0	0	0	0		0	0	0	0		0	0	0	0		
PHF	.000	.000	.000	.000	.000	.000	.000	.000	.000	.000	.000	.000	.000	.000	.000	.000	.000	.000	.000	.000	.000

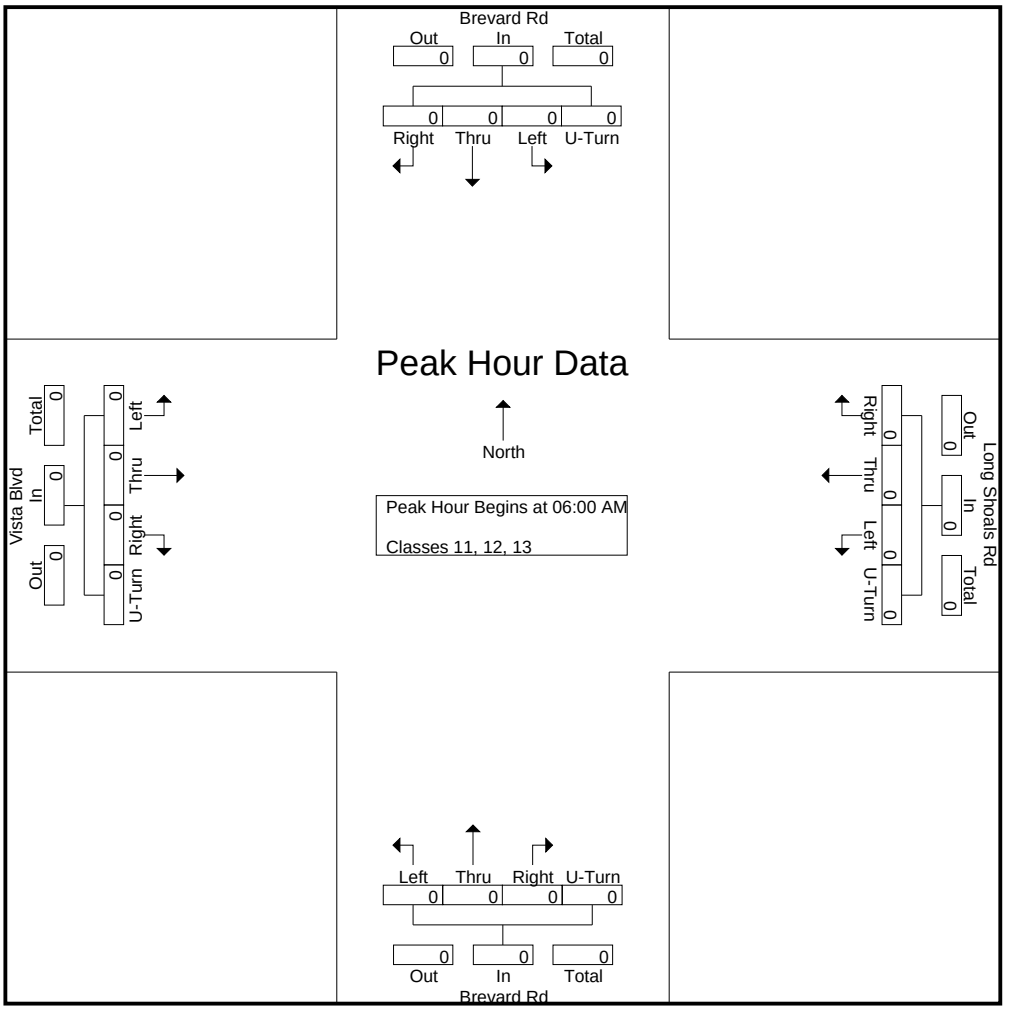

DocuSign Envelope ID: 5C03745C-4B01-4834-A65D-B77F558A4F46

Quality Counts

920 Blairhill Rd, Ste B-106
Charlotte, NC 28217

File Name : 15411714 - Brevard Rd -- Vista Blvd_Long Shoals Rd
Site Code : 15411714
Start Date : 4/20/2021

	Brevard Rd Southbound					Long Shoals Rd Westbound					Brevard Rd Northbound					Vista Blvd Eastbound					
Start Time	Left	Thru	Right	U-Turn	App. Total	Left	Thru	Right	U-Turn	App. Total	Left	Thru	Right	U-Turn	App. Total	Left	Thru	Right	U-Turn	App. Total	Int. Total
Peak Hour Analysis From 12:00 PM to 06:45 PM - Peak 1 of 1																					
Peak Hour for Entire Intersection Begins at 12:00 PM																					
12:00 PM	0	0	0	0	0	0	0	0	0	0	0	0	0	0	0	0	0	0	0	0	0
12:15 PM	0	0	0	0	0	0	0	0	0	0	0	0	0	0	0	0	0	0	0	0	0
12:30 PM	0	0	0	0	0	0	0	0	0	0	0	0	0	0	0	0	0	0	0	0	0
12:45 PM	0	0	0	0	0	0	0	0	0	0	0	0	0	0	0	0	0	0	0	0	0
Total Volume	0	0	0	0	0	0	0	0	0	0	0	0	0	0	0	0	0	0	0	0	0
% App. Total	0	0	0	0		0	0	0	0		0	0	0	0		0	0	0	0		
PHF	.000	.000	.000	.000	.000	.000	.000	.000	.000	.000	.000	.000	.000	.000	.000	.000	.000	.000	.000	.000	.000

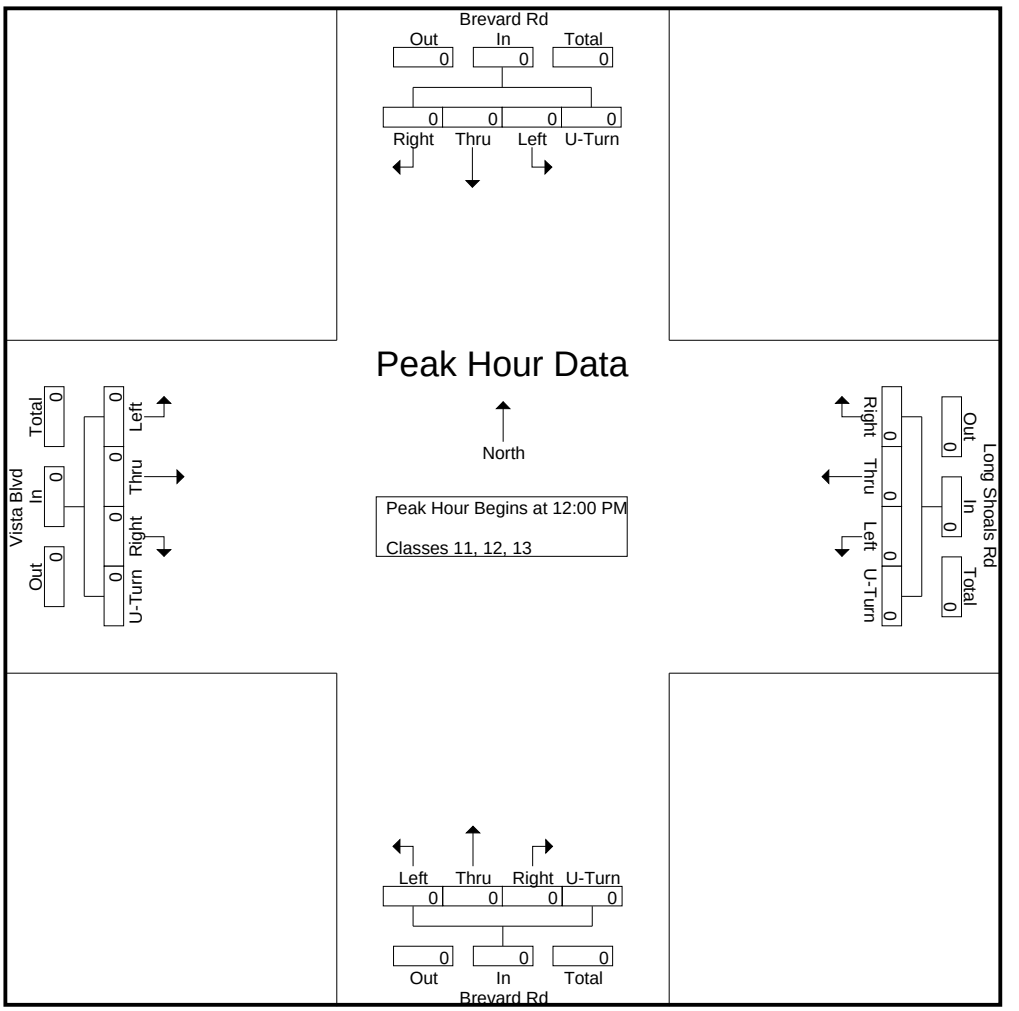

DocuSign Envelope ID: 5C03745C-4B01-4834-A65D-B77F558A4F46

Quality Counts

920 Blairhill Rd, Ste B-106
Charlotte, NC 28217

File Name : 15411714 - Brevard Rd -- Vista Blvd_Long Shoals Rd
Site Code : 15411714
Start Date : 4/20/2021
Page No : 1

Groups Printed- Bikes, Peds

	Brevard Rd Southbound					Long Shoals Rd Westbound					Brevard Rd Northbound					Vista Blvd Eastbound					
Start Time	Left	Thru	Right	Peds	App. Total	Left	Thru	Right	Peds	App. Total	Left	Thru	Right	Peds	App. Total	Left	Thru	Right	Peds	App. Total	Int. Total
06:00 AM	0	0	0	0	0	0	0	0	0	0	0	0	0	0	0	0	0	0	0	0	0
06:15 AM	0	0	0	0	0	0	0	0	0	0	0	0	0	0	0	0	0	0	0	0	0
06:30 AM	0	1	0	0	1	0	0	0	0	0	0	0	0	0	0	0	0	0	0	0	1
06:45 AM	0	0	0	0	0	0	0	0	0	0	0	0	0	0	0	0	0	0	0	0	0
Total	0	1	0	0	1	0	0	0	0	0	0	0	0	0	0	0	0	0	0	0	1
07:00 AM	0	0	0	0	0	0	0	0	0	0	0	0	0	0	0	0	0	0	0	0	0
07:15 AM	0	0	0	1	1	0	0	0	0	0	0	0	0	0	0	0	0	0	0	0	1
07:30 AM	0	0	0	0	0	0	0	0	0	0	0	0	0	0	0	0	0	0	0	0	0
07:45 AM	0	0	0	0	0	0	0	0	0	0	0	0	0	0	0	0	0	0	0	0	0
Total	0	0	0	1	1	0	0	0	0	0	0	0	0	0	0	0	0	0	0	0	1
08:00 AM	0	0	0	0	0	0	0	0	0	0	0	0	0	0	0	0	0	0	0	0	0
08:15 AM	0	0	0	0	0	0	0	0	0	0	0	0	0	0	0	0	0	0	0	0	0
08:30 AM	0	0	0	0	0	0	0	0	0	0	0	0	0	0	0	0	0	0	0	0	0
08:45 AM	0	0	0	0	0	0	0	0	0	0	0	0	0	0	0	0	0	0	0	0	0
Total	0	0	0	0	0	0	0	0	0	0	0	0	0	0	0	0	0	0	0	0	0
09:00 AM	0	0	0	0	0	0	0	0	0	0	0	0	0	0	0	0	0	0	0	0	0
09:15 AM	0	0	0	1	1	0	0	0	0	0	0	0	0	0	0	0	0	0	0	0	1
09:30 AM	0	0	0	0	0	0	0	0	0	0	0	0	0	0	0	0	0	0	0	0	0
09:45 AM	0	0	0	0	0	0	0	0	0	0	0	0	0	0	0	0	0	0	0	0	0
Total	0	0	0	1	1	0	0	0	0	0	0	0	0	0	0	0	0	0	0	0	1
10:00 AM	0	0	0	0	0	0	0	0	0	0	0	0	0	0	0	0	0	0	1	1	1
10:15 AM	0	0	0	0	0	0	0	0	0	0	0	0	0	0	0	0	0	0	0	0	0
10:30 AM	0	0	0	0	0	0	0	0	0	0	0	0	0	0	0	0	0	0	0	0	0
10:45 AM	0	0	0	0	0	0	0	0	0	0	0	0	0	0	0	0	0	0	0	0	0
Total	0	0	0	0	0	0	0	0	0	0	0	0	0	0	0	0	0	0	1	1	1
11:00 AM	0	0	0	0	0	0	0	0	0	0	0	0	0	0	0	0	0	0	0	0	0
11:15 AM	0	0	0	0	0	0	0	0	0	0	0	0	0	0	0	0	0	0	0	0	0
11:30 AM	0	0	0	0	0	0	0	0	0	0	0	0	0	0	0	0	0	0	0	0	0
11:45 AM	0	0	0	0	0	0	0	0	0	0	0	0	0	0	0	0	0	0	0	0	0
Total	0	0	0	0	0	0	0	0	0	0	0	0	0	0	0	0	0	0	0	0	0
12:00 PM	0	0	0	2	2	0	0	0	0	0	0	0	0	0	0	0	0	0	0	0	2
12:15 PM	0	0	0	0	0	0	0	0	0	0	0	0	0	0	0	0	0	0	0	0	0
12:30 PM	0	0	0	0	0	0	0	0	0	0	0	0	0	0	0	0	0	0	0	0	0
12:45 PM	0	0	0	0	0	0	0	0	0	0	0	0	0	0	0	0	0	0	0	0	0
Total	0	0	0	2	2	0	0	0	0	0	0	0	0	0	0	0	0	0	0	0	2
01:00 PM	0	0	0	0	0	0	0	0	0	0	0	0	0	0	0	0	0	0	0	0	0
01:15 PM	0	0	0	0	0	0	0	0	0	0	0	0	0	0	0	0	0	0	0	0	0
01:30 PM	0	0	0	0	0	0	0	0	0	0	0	1	0	0	1	0	0	0	0	0	1
01:45 PM	0	0	0	0	0	0	0	0	0	0	0	0	0	0	0	0	0	0	1	1	1
Total	0	0	0	0	0	0	0	0	0	0	0	1	0	0	1	0	0	0	1	1	2
02:00 PM	0	0	0	0	0	0	0	0	0	0	0	0	0	0	0	0	0	0	0	0	0
02:15 PM	0	0	0	0	0	0	0	0	0	0	0	0	0	0	0	0	0	0	0	0	0
02:30 PM	0	0	0	0	0	0	0	0	0	0	0	0	0	0	0	0	0	0	0	0	0
02:45 PM	0	0	0	0	0	0	0	0	0	0	0	0	0	0	0	0	0	0	0	0	0
Total	0	0	0	0	0	0	0	0	0	0	0	0	0	0	0	0	0	0	0	0	0
03:00 PM	0	0	0	0	0	0	0	0	0	0	0	0	0	0	0	0	0	0	0	0	0
03:15 PM	0	0	0	0	0	0	0	0	0	0	0	0	0	0	0	0	0	0	0	0	0
03:30 PM	0	0	0	0	0	0	0	0	0	0	0	0	0	0	0	0	0	0	0	0	0

DocuSign Envelope ID: 5C03745C-4B01-4834-A65D-B77F558A4F46

Quality Counts

920 Blairhill Rd, Ste B-106
Charlotte, NC 28217

File Name : 15411714 - Brevard Rd -- Vista Blvd_Long Shoals Rd
Site Code : 15411714
Start Date : 4/20/2021
Page No : 2

Groups Printed- Bikes, Peds

	Brevard Rd Southbound					Long Shoals Rd Westbound					Brevard Rd Northbound					Vista Blvd Eastbound					
Start Time	Left	Thru	Right	Peds	App. Total	Left	Thru	Right	Peds	App. Total	Left	Thru	Right	Peds	App. Total	Left	Thru	Right	Peds	App. Total	Int. Total
03:45 PM	0	0	0	0	0	0	0	0	0	0	0	0	0	0	0	0	0	0	0	0	0
Total	0	0	0	0	0	0	0	0	0	0	0	0	0	0	0	0	0	0	0	0	0
04:00 PM	0	0	0	0	0	0	0	0	0	0	0	0	0	0	0	0	0	0	0	0	0
04:15 PM	0	0	0	0	0	0	0	0	0	0	0	1	0	0	1	0	0	0	0	0	1
04:30 PM	0	0	0	0	0	0	0	0	0	0	0	0	0	0	0	0	0	0	0	0	0
04:45 PM	0	0	0	0	0	0	0	0	0	0	0	0	0	0	0	0	0	0	0	0	0
Total	0	0	0	0	0	0	0	0	0	0	0	1	0	0	1	0	0	0	0	0	1
05:00 PM	0	0	0	0	0	0	0	0	0	0	0	0	0	0	0	0	0	0	0	0	0
05:15 PM	0	0	0	0	0	0	0	0	0	0	0	0	0	0	0	0	0	0	0	0	0
05:30 PM	0	0	0	0	0	0	0	0	0	0	0	0	0	0	0	0	0	0	0	0	0
05:45 PM	0	0	0	0	0	0	0	0	0	0	0	0	0	0	0	0	0	0	0	0	0
Total	0	0	0	0	0	0	0	0	0	0	0	0	0	0	0	0	0	0	0	0	0
06:00 PM	0	0	0	0	0	0	0	0	0	0	0	0	0	0	0	0	0	0	0	0	0
06:15 PM	0	0	0	0	0	0	0	0	0	0	0	0	0	0	0	0	0	0	1	1	1
06:30 PM	0	0	0	0	0	0	0	0	0	0	0	0	0	0	0	0	0	0	0	0	0
06:45 PM	0	0	0	0	0	0	0	0	0	0	0	0	0	0	0	0	0	0	0	0	0
Total	0	0	0	0	0	0	0	0	0	0	0	0	0	0	0	0	0	0	1	1	1
Grand Total	0	1	0	4	5	0	0	0	0	0	0	2	0	0	2	0	0	0	3	3	10
Apprch %	0	20	0	80		0	0	0	0		0	100	0	0		0	0	0	100		
Total %	0	10	0	40	50	0	0	0	0	0	0	20	0	0	20	0	0	0	30	30	

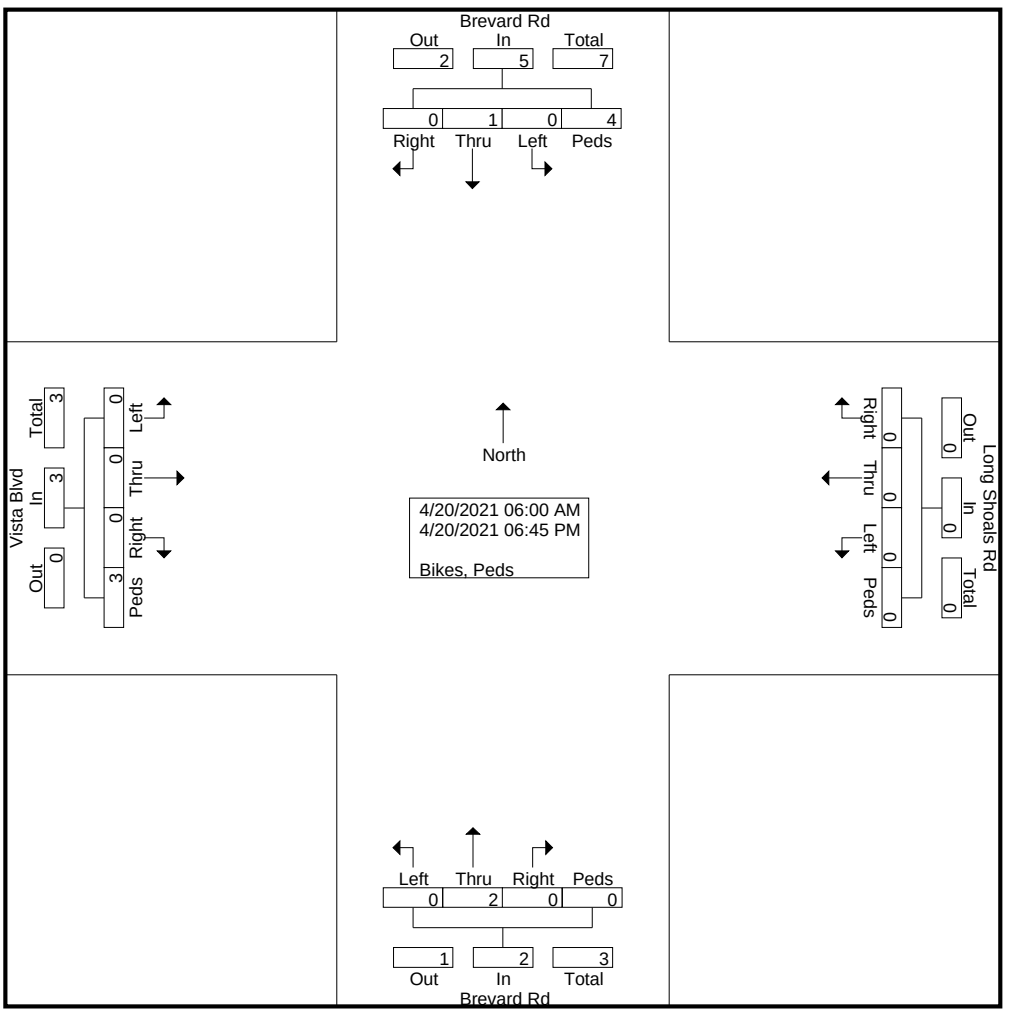

DocuSign Envelope ID: 5C03745C-4B01-4834-A65D-B77F558A4F46

Quality Counts

920 Blairhill Rd, Ste B-106
Charlotte, NC 28217

File Name : 15411714 - Brevard Rd -- Vista Blvd_Long Shoals Rd
Site Code : 15411714
Start Date : 4/20/2021

	Brevard Rd Southbound					Long Shoals Rd Westbound					Brevard Rd Northbound					Vista Blvd Eastbound					
Start Time	Left	Thru	Right	Peds	App. Total	Left	Thru	Right	Peds	App. Total	Left	Thru	Right	Peds	App. Total	Left	Thru	Right	Peds	App. Total	Int. Total
Peak Hour Analysis From 06:00 AM to 11:45 AM - Peak 1 of 1																					
Peak Hour for Entire Intersection Begins at 06:30 AM																					
06:30 AM	0	**1**	0	0	**1**	0	0	0	0	0	0	0	0	0	0	0	0	0	0	0	**1**
06:45 AM	0	0	0	0	0	0	0	0	0	0	0	0	0	0	0	0	0	0	0	0	0
07:00 AM	0	0	0	0	0	0	0	0	0	0	0	0	0	0	0	0	0	0	0	0	0
07:15 AM	0	0	0	**1**	1	0	0	0	0	0	0	0	0	0	0	0	0	0	0	0	1
Total Volume	0	1	0	1	2	0	0	0	0	0	0	0	0	0	0	0	0	0	0	0	2
% App. Total	0	50	0	50		0	0	0	0		0	0	0	0		0	0	0	0		
PHF	.000	.250	.000	.250	.500	.000	.000	.000	.000	.000	.000	.000	.000	.000	.000	.000	.000	.000	.000	.000	.500

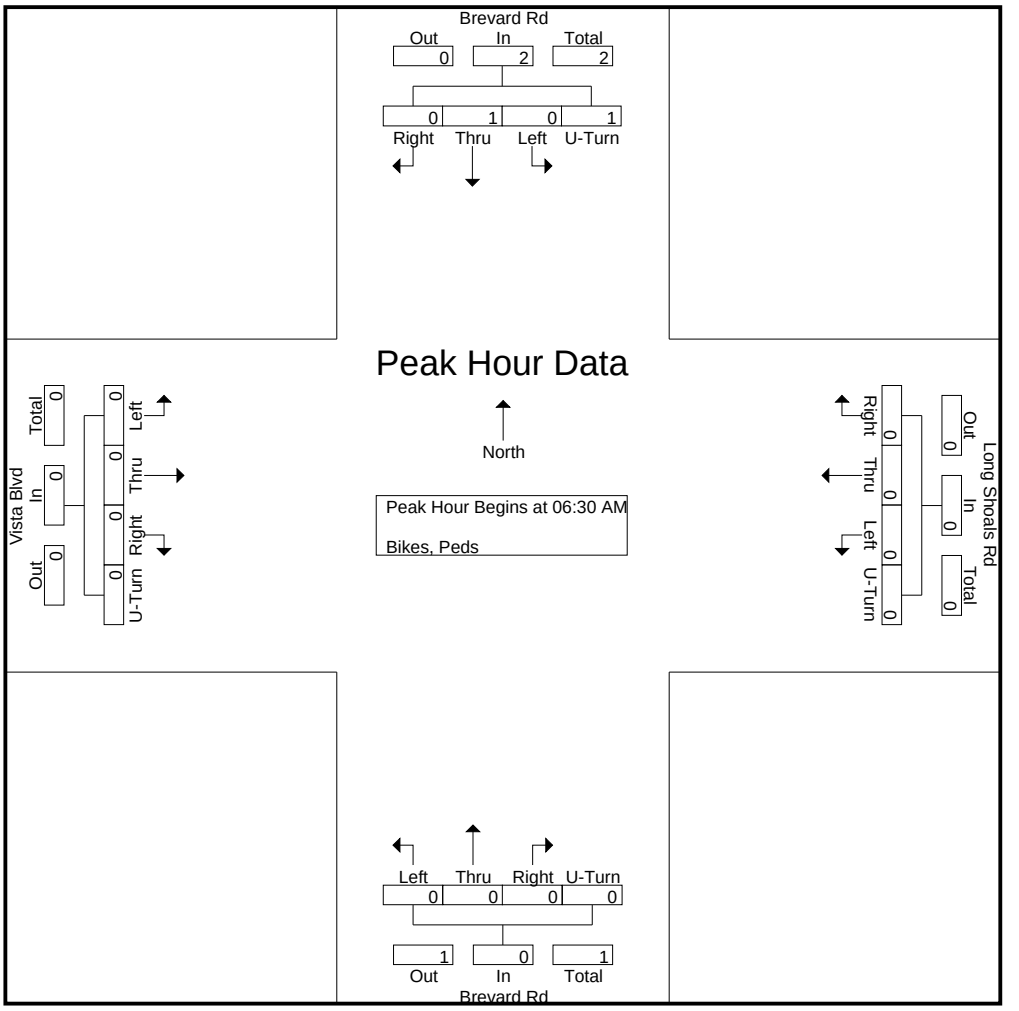

DocuSign Envelope ID: 5C03745C-4B01-4834-A65D-B77F558A4F46

Quality Counts

920 Blairhill Rd, Ste B-106
Charlotte, NC 28217

File Name : 15411714 - Brevard Rd -- Vista Blvd_Long Shoals Rd
Site Code : 15411714
Start Date : 4/20/2021
Page No : 4

	Brevard Rd Southbound					Long Shoals Rd Westbound					Brevard Rd Northbound					Vista Blvd Eastbound					
Start Time	Left	Thru	Right	Peds	App. Total	Left	Thru	Right	Peds	App. Total	Left	Thru	Right	Peds	App. Total	Left	Thru	Right	Peds	App. Total	Int. Total
Peak Hour Analysis From 12:00 PM to 06:45 PM - Peak 1 of 1																					
Peak Hour for Entire Intersection Begins at 12:00 PM																					
12:00 PM	0	0	0	**2**	**2**	0	0	0	0	0	0	0	0	0	0	0	0	0	0	0	**2**
12:15 PM	0	0	0	0	0	0	0	0	0	0	0	0	0	0	0	0	0	0	0	0	0
12:30 PM	0	0	0	0	0	0	0	0	0	0	0	0	0	0	0	0	0	0	0	0	0
12:45 PM	0	0	0	0	0	0	0	0	0	0	0	0	0	0	0	0	0	0	0	0	0
Total Volume	0	0	0	2	2	0	0	0	0	0	0	0	0	0	0	0	0	0	0	0	2
% App. Total	0	0	0	100		0	0	0	0		0	0	0	0		0	0	0	0		
PHF	.000	.000	.000	.250	.250	.000	.000	.000	.000	.000	.000	.000	.000	.000	.000	.000	.000	.000	.000	.000	.250

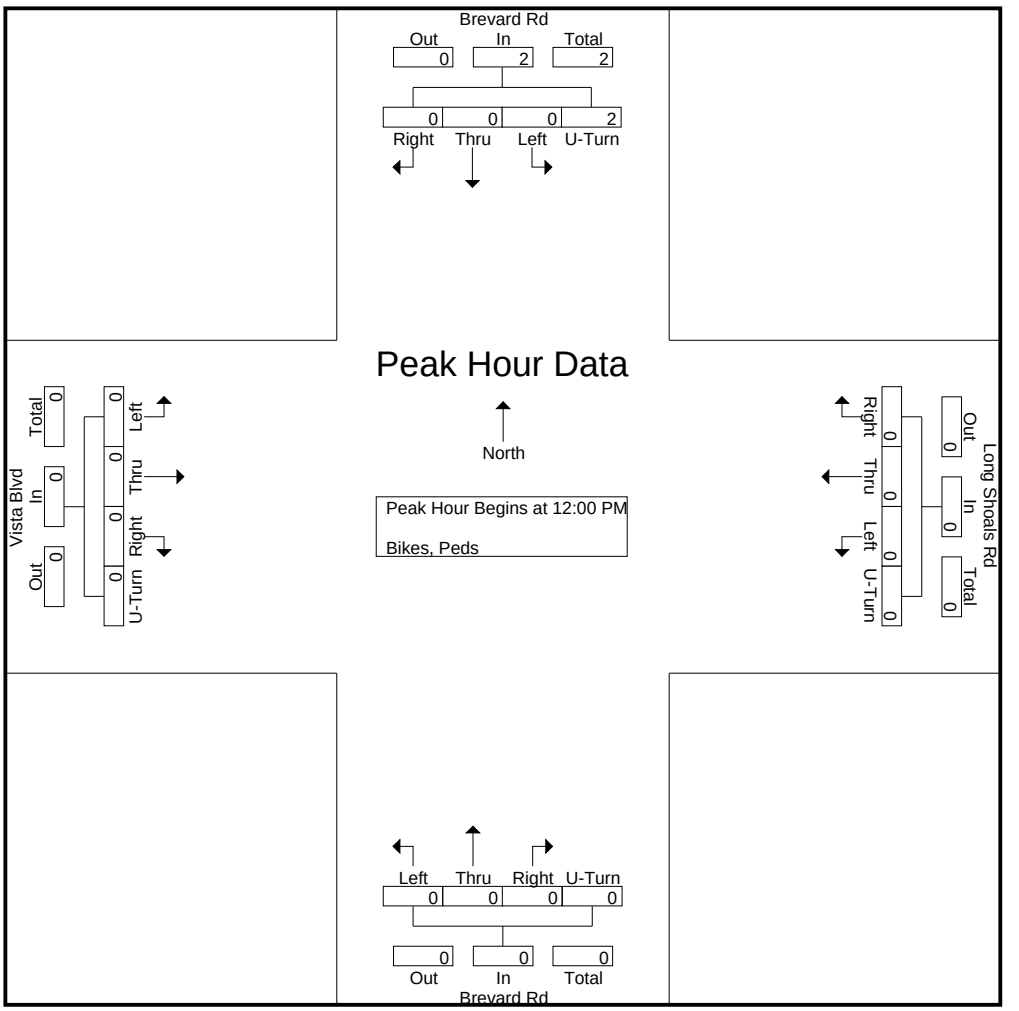

DocuSign Envelope ID: 5C03745C-4B01-4834-A65D-B77F558A4F46

QUALITY COUNTS LLC
920 Blairhill Rd, Suite 106, Charlotte, NC 28217
704.215.4616

Count Number: 15411715
County: Buncombe
City: Arden
Division: 13

Location: Clayton Rd & Long Shoals Rd
General Location Type: Intersection
Count Type: Turning Movement (Classification)
Count Start Date: 4/20/2021
Time: 6:00 AM – 7:00 PM
Volume: 17,523

Maximum Temperature: 69° F
Minimum Temperature: 40° F
Precipitation: 0.00 in
Snowfall: 0.0 in
Average Sky Cover: 0.2
Weather Conditions: Clear

1. **School in Session:** Yes
2. **Pedestrians Counted**: Yes
3. **Disabled Pedestrians Present**: No
   Description and Approaches Used: N/A
4. **Counted By**: Jared Pierson
5. **Data Processor**: Jon B
6. **Signal Inventory**: N/A
7. **Data Collection Method**: Video/Count Board
8. **Equipment Operating Properly**: Yes
9. **Area Lighting Present**: Yes
10. **Nearest Roadway Stop Sign < 300 ft:** No
    If yes, list approaches: N/A
11. **Nearest Traffic Signal < 300 ft:** No
    If yes, list approaches: N/A
12. **At-Grade Railroad Crossing Present (<200 ft):** No
    If yes, list approaches & distance: N/A
13. **Other:**

↑ North

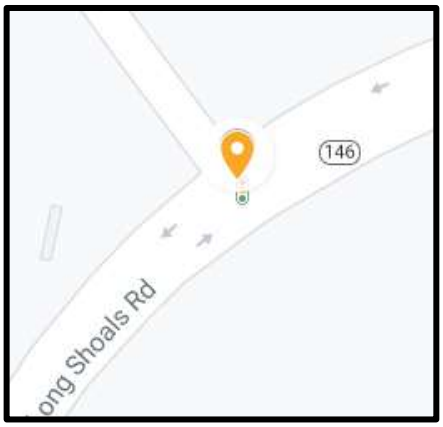

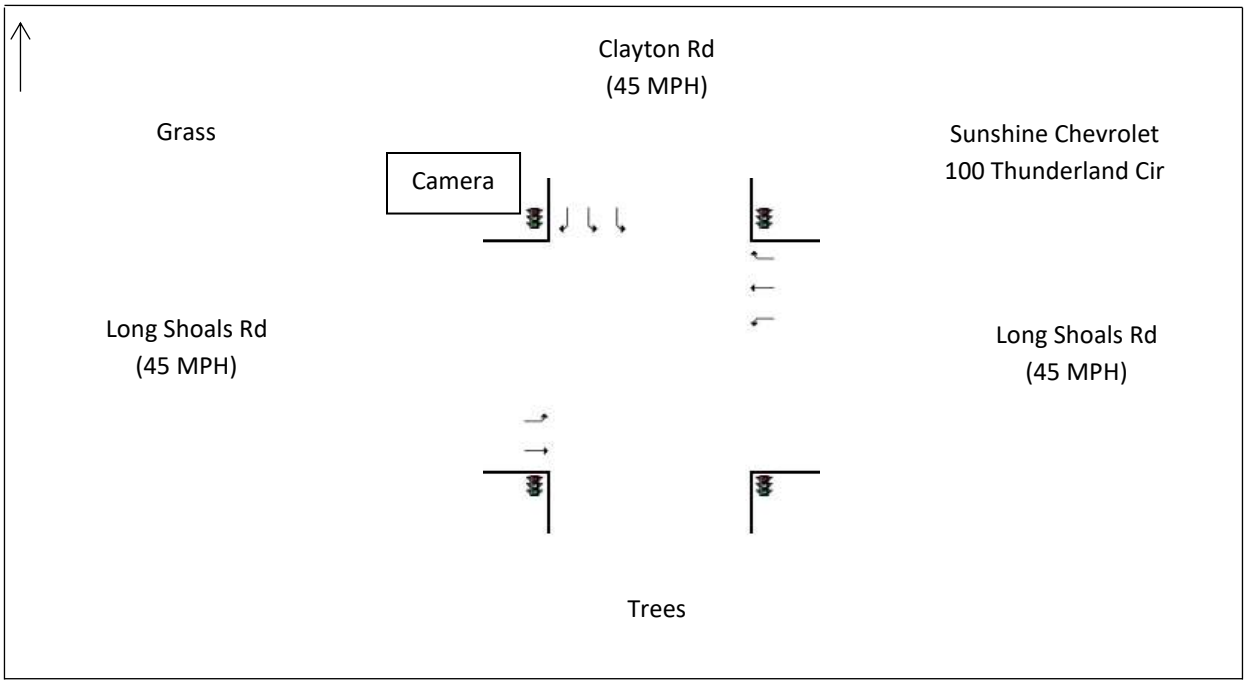

DocuSign Envelope ID: 5C03745C-4B01-4834-A65D-B77F558A4F46

Quality Counts

920 Blairhill Rd, Ste B-106
Charlotte, NC 28217

File Name : 15411715 - Clayton Rd -- Long Shoals Rd
Site Code : 15411715
Start Date : 4/20/2021
Page No : 1

Groups Printed- Classes 1, 2, 3 - Classes 4, 5, 6, 7 - Classes 8, 9, 10 - Classes 11, 12, 13

	Clayton Rd Southbound					Long Shoals Rd Westbound					Northbound					Long Shoals Rd Eastbound					
Start Time	Left	Thru	Right	U-Turn	App. Total	Left	Thru	Right	U-Turn	App. Total	Left	Thru	Right	U-Turn	App. Total	Left	Thru	Right	U-Turn	App. Total	Int. Total
06:00 AM	33	0	4	0	37	0	20	14	6	40	0	0	0	0	0	1	32	0	0	33	110
06:15 AM	27	0	0	0	27	0	33	16	3	52	0	0	0	0	0	2	41	0	0	43	122
06:30 AM	42	0	5	0	47	0	52	32	3	87	0	0	0	0	0	1	43	0	0	44	178
06:45 AM	37	0	4	0	41	0	95	37	8	140	0	0	0	0	0	2	51	0	0	53	234
Total	139	0	13	0	152	0	200	99	20	319	0	0	0	0	0	6	167	0	0	173	644
07:00 AM	57	0	10	0	67	0	83	31	7	121	0	0	0	0	0	1	75	0	0	76	264
07:15 AM	79	0	9	0	88	0	119	40	17	176	0	0	0	0	0	1	97	0	0	98	362
07:30 AM	90	0	10	0	100	0	140	75	11	226	0	0	0	0	0	0	140	0	0	140	466
07:45 AM	108	0	12	0	120	0	153	86	18	257	0	0	0	0	0	11	124	0	0	135	512
Total	334	0	41	0	375	0	495	232	53	780	0	0	0	0	0	13	436	0	0	449	1604
08:00 AM	87	0	4	0	91	0	107	76	8	191	0	0	0	0	0	7	120	0	0	127	409
08:15 AM	80	0	3	0	83	0	112	57	13	182	0	0	0	0	0	4	97	0	0	101	366
08:30 AM	87	0	4	0	91	0	94	49	12	155	0	0	0	0	0	4	100	0	0	104	350
08:45 AM	72	0	4	0	76	0	107	46	13	166	0	0	0	0	0	7	103	0	0	110	352
Total	326	0	15	0	341	0	420	228	46	694	0	0	0	0	0	22	420	0	0	442	1477
09:00 AM	68	0	7	0	75	0	88	40	10	138	0	0	0	0	0	4	72	0	0	76	289
09:15 AM	56	0	5	0	61	0	82	41	11	134	0	0	0	0	0	1	92	0	0	93	288
09:30 AM	59	0	5	0	64	0	64	41	6	111	0	0	0	0	0	4	96	0	0	100	275
09:45 AM	57	0	4	0	61	0	75	47	5	127	0	0	0	0	0	1	82	0	0	83	271
Total	240	0	21	0	261	0	309	169	32	510	0	0	0	0	0	10	342	0	0	352	1123
10:00 AM	38	0	2	0	40	0	76	47	8	131	0	0	0	0	0	1	76	0	0	77	248
10:15 AM	43	0	4	0	47	0	68	36	6	110	0	0	0	0	0	3	77	0	0	80	237
10:30 AM	54	0	8	0	62	0	80	39	5	124	0	0	0	0	0	4	83	0	0	87	273
10:45 AM	60	0	6	0	66	0	74	51	8	133	0	0	0	0	0	0	80	0	0	80	279
Total	195	0	20	0	215	0	298	173	27	498	0	0	0	0	0	8	316	0	0	324	1037
11:00 AM	43	0	3	0	46	0	67	65	2	134	0	0	0	0	0	4	73	0	0	77	257
11:15 AM	57	0	4	0	61	0	83	62	7	152	0	0	0	0	0	4	103	0	0	107	320
11:30 AM	63	0	3	0	66	0	83	59	9	151	0	0	0	0	0	2	121	0	0	123	340
11:45 AM	50	0	5	0	55	0	99	51	7	157	0	0	0	0	0	3	103	0	0	106	318
Total	213	0	15	0	228	0	332	237	25	594	0	0	0	0	0	13	400	0	0	413	1235
12:00 PM	64	0	2	0	66	0	101	54	11	166	0	0	0	0	0	7	135	0	0	142	374
12:15 PM	72	0	4	0	76	0	120	46	5	171	0	0	0	0	0	2	111	0	0	113	360
12:30 PM	68	0	1	0	69	0	108	65	8	181	0	0	0	0	0	5	108	0	0	113	363
12:45 PM	69	0	5	0	74	0	113	59	4	176	0	0	0	0	0	0	100	0	0	100	350
Total	273	0	12	0	285	0	442	224	28	694	0	0	0	0	0	14	454	0	0	468	1447
01:00 PM	68	0	5	0	73	0	119	49	7	175	0	0	0	0	0	7	91	0	0	98	346
01:15 PM	75	0	4	0	79	0	116	77	9	202	0	0	0	0	0	4	106	0	0	110	391
01:30 PM	58	0	3	0	61	0	99	64	9	172	0	0	0	0	0	2	85	0	0	87	320
01:45 PM	62	0	4	0	66	0	107	70	12	189	0	0	0	0	0	3	93	0	0	96	351
Total	263	0	16	0	279	0	441	260	37	738	0	0	0	0	0	16	375	0	0	391	1408
02:00 PM	82	0	4	0	86	0	89	64	4	157	0	0	0	0	0	6	80	0	0	86	329
02:15 PM	79	0	8	0	87	0	99	70	7	176	0	0	0	0	0	5	78	0	0	83	346
02:30 PM	90	0	6	0	96	0	125	73	5	203	0	0	0	0	0	16	130	0	0	146	445
02:45 PM	82	0	3	0	85	0	83	62	5	150	0	0	0	0	0	4	109	0	0	113	348
Total	333	0	21	0	354	0	396	269	21	686	0	0	0	0	0	31	397	0	0	428	1468
03:00 PM	78	0	5	0	83	0	92	85	5	182	0	0	0	0	0	5	142	0	0	147	412
03:15 PM	76	0	7	0	83	0	119	80	5	204	0	0	0	0	0	6	98	0	0	104	391
03:30 PM	96	0	5	0	101	0	85	77	8	170	0	0	0	0	0	6	112	0	0	118	389

DocuSign Envelope ID: 5C03745C-4B01-4834-A65D-B77F558A4F46

Quality Counts

920 Blairhill Rd, Ste B-106
Charlotte, NC 28217

File Name : 15411715 - Clayton Rd -- Long Shoals Rd
Site Code : 15411715
Start Date : 4/20/2021

Groups Printed- Classes 1, 2, 3 - Classes 4, 5, 6, 7 - Classes 8, 9, 10 - Classes 11, 12, 13

	Clayton Rd Southbound					Long Shoals Rd Westbound					Northbound					Long Shoals Rd Eastbound					
Start Time	Left	Thru	Right	U-Turn	App. Total	Left	Thru	Right	U-Turn	App. Total	Left	Thru	Right	U-Turn	App. Total	Left	Thru	Right	U-Turn	App. Total	Int. Total
03:45 PM	91	0	2	0	93	0	117	79	10	206	0	0	0	0	0	5	112	0	0	117	416
Total	341	0	19	0	360	0	413	321	28	762	0	0	0	0	0	22	464	0	0	486	1608
04:00 PM	106	0	6	0	112	0	115	72	7	194	0	0	0	0	0	3	85	0	0	88	394
04:15 PM	86	0	3	0	89	0	121	104	3	228	0	0	0	0	0	7	116	0	0	123	440
04:30 PM	77	0	6	0	83	0	107	88	5	200	0	0	0	0	0	6	108	0	0	114	397
04:45 PM	79	0	3	0	82	0	88	88	10	186	0	0	0	0	0	4	109	0	0	113	381
Total	348	0	18	0	366	0	431	352	25	808	0	0	0	0	0	20	418	0	0	438	1612
05:00 PM	99	0	3	0	102	0	89	86	11	186	0	0	0	0	0	7	126	0	0	133	421
05:15 PM	94	0	6	0	100	0	98	104	4	206	0	0	0	0	0	6	111	0	0	117	423
05:30 PM	105	0	3	0	108	0	110	97	8	215	0	0	0	0	0	3	71	0	0	74	397
05:45 PM	77	0	4	0	81	0	106	85	5	196	0	0	0	0	0	4	106	0	0	110	387
Total	375	0	16	0	391	0	403	372	28	803	0	0	0	0	0	20	414	0	0	434	1628
06:00 PM	77	0	4	0	81	0	94	87	11	192	0	0	0	0	0	2	82	0	0	84	357
06:15 PM	55	0	5	0	60	0	92	91	8	191	0	0	0	0	0	14	63	0	0	77	328
06:30 PM	75	0	2	0	77	0	71	64	9	144	0	0	0	0	0	2	44	0	0	46	267
06:45 PM	56	0	5	0	61	0	88	52	9	149	0	0	0	0	0	3	67	0	0	70	280
Total	263	0	16	0	279	0	345	294	37	676	0	0	0	0	0	21	256	0	0	277	1232
Grand Total	3643	0	243	0	3886	0	4925	3230	407	8562	0	0	0	0	0	216	4859	0	0	5075	17523
Apprch %	93.7	0	6.3	0		0	57.5	37.7	4.8		0	0	0	0		4.3	95.7	0	0		
Total %	20.8	0	1.4	0	22.2	0	28.1	18.4	2.3	48.9	0	0	0	0	0	1.2	27.7	0	0	29	
Classes 1, 2, 3	3494	0	218	0	3712	0	4360	3075	402	7837	0	0	0	0	0	197	4369	0	0	4566	16115
% Classes 1, 2, 3	95.9	0	89.7	0	95.5	0	88.5	95.2	98.8	91.5	0	0	0	0	0	91.2	89.9	0	0	90	92
Classes 4, 5, 6, 7	117	0	21	0	138	0	454	112	5	571	0	0	0	0	0	14	376	0	0	390	1099
% Classes 4, 5, 6, 7	3.2	0	8.6	0	3.6	0	9.2	3.5	1.2	6.7	0	0	0	0	0	6.5	7.7	0	0	7.7	6.3
Classes 8, 9, 10	32	0	4	0	36	0	111	43	0	154	0	0	0	0	0	5	114	0	0	119	309
% Classes 8, 9, 10	0.9	0	1.6	0	0.9	0	2.3	1.3	0	1.8	0	0	0	0	0	2.3	2.3	0	0	2.3	1.8
Classes 11, 12, 13	0	0	0	0	0	0	0	0	0	0	0	0	0	0	0	0	0	0	0	0	0
% Classes 11, 12, 13	0	0	0	0	0	0	0	0	0	0	0	0	0	0	0	0	0	0	0	0	0

DocuSign Envelope ID: 5C03745C-4B01-4834-A65D-B77F558A4F46

Quality Counts

920 Blairhill Rd, Ste B-106
Charlotte, NC 28217

File Name : 15411715 - Clayton Rd -- Long Shoals Rd
Site Code : 15411715
Start Date : 4/20/2021
Page No : 3

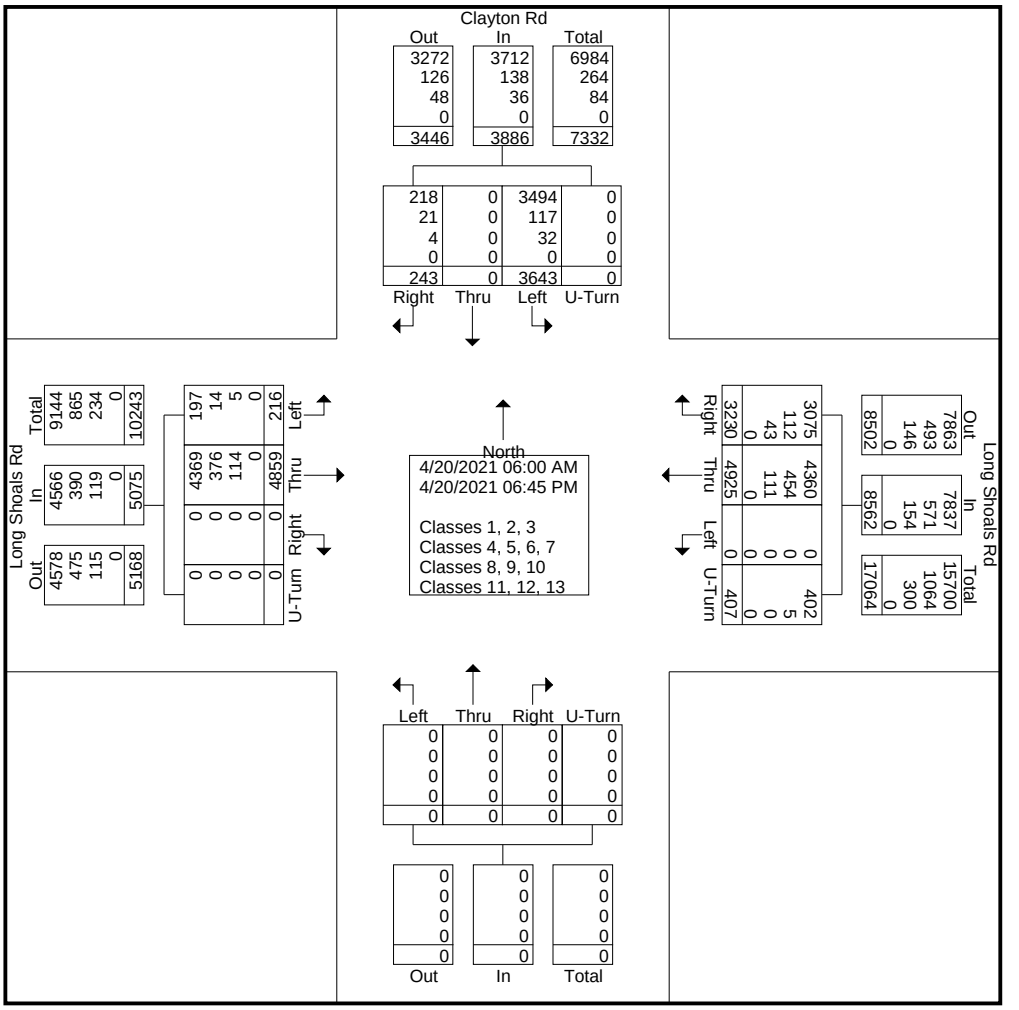

DocuSign Envelope ID: 5C03745C-4B01-4834-A65D-B77F558A4F46

Quality Counts

920 Blairhill Rd, Ste B-106
Charlotte, NC 28217

File Name : 15411715 - Clayton Rd -- Long Shoals Rd
Site Code : 15411715
Start Date : 4/20/2021
Page No : 4

	Clayton Rd Southbound					Long Shoals Rd Westbound					Northbound					Long Shoals Rd Eastbound					
Start Time	Left	Thru	Right	U-Turn	App. Total	Left	Thru	Right	U-Turn	App. Total	Left	Thru	Right	U-Turn	App. Total	Left	Thru	Right	U-Turn	App. Total	Int. Total
Peak Hour Analysis From 06:00 AM to 11:45 AM - Peak 1 of 1																					
Peak Hour for Entire Intersection Begins at 07:30 AM																					
07:30 AM	90	0	10	0	100	0	140	75	11	226	0	0	0	0	0	0	**140**	0	0	**140**	466
07:45 AM	**108**	0	**12**	0	**120**	0	**153**	**86**	**18**	**257**	0	0	0	0	0	**11**	124	0	0	135	**512**
08:00 AM	87	0	4	0	91	0	107	76	8	191	0	0	0	0	0	7	120	0	0	127	409
08:15 AM	80	0	3	0	83	0	112	57	13	182	0	0	0	0	0	4	97	0	0	101	366
Total Volume	365	0	29	0	394	0	512	294	50	856	0	0	0	0	0	22	481	0	0	503	1753
% App. Total	92.6	0	7.4	0		0	59.8	34.3	5.8		0	0	0	0		4.4	95.6	0	0		
PHF	.845	.000	.604	.000	.821	.000	.837	.855	.694	.833	.000	.000	.000	.000	.000	.500	.859	.000	.000	.898	.856

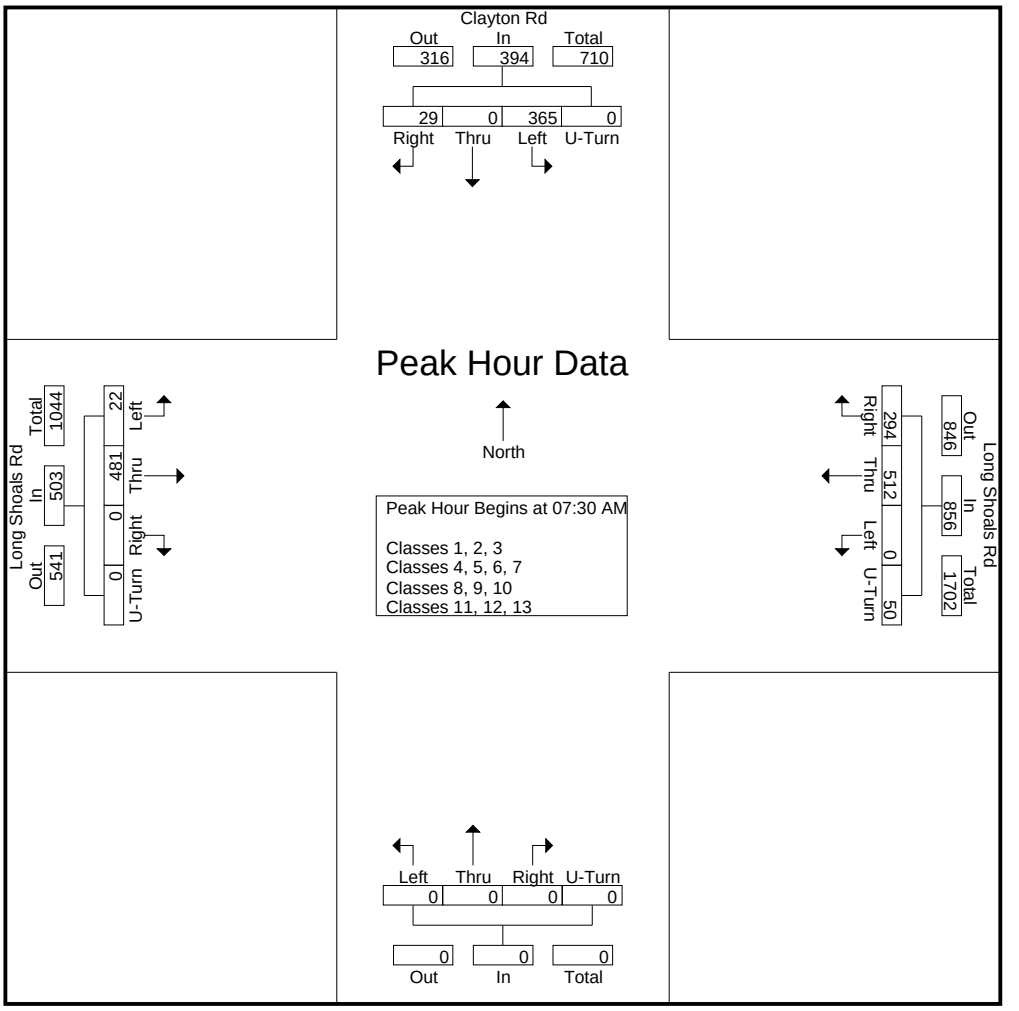

DocuSign Envelope ID: 5C03745C-4B01-4834-A65D-B77F558A4F46

Quality Counts

920 Blairhill Rd, Ste B-106
Charlotte, NC 28217

File Name : 15411715 - Clayton Rd -- Long Shoals Rd
Site Code : 15411715
Start Date : 4/20/2021
Page No : 5

	Clayton Rd Southbound					Long Shoals Rd Westbound					Northbound					Long Shoals Rd Eastbound					
Start Time	Left	Thru	Right	U-Turn	App. Total	Left	Thru	Right	U-Turn	App. Total	Left	Thru	Right	U-Turn	App. Total	Left	Thru	Right	U-Turn	App. Total	Int. Total
Peak Hour Analysis From 12:00 PM to 06:45 PM - Peak 1 of 1																					
Peak Hour for Entire Intersection Begins at 03:45 PM																					
03:45 PM	91	0	2	0	93	0	117	79	**10**	206	0	0	0	0	0	5	112	0	0	117	416
04:00 PM	**106**	0	**6**	0	**112**	0	115	72	7	194	0	0	0	0	0	3	85	0	0	88	394
04:15 PM	86	0	3	0	89	0	**121**	**104**	3	**228**	0	0	0	0	0	**7**	**116**	0	0	**123**	**440**
04:30 PM	77	0	6	0	83	0	107	88	5	200	0	0	0	0	0	6	108	0	0	114	397
Total Volume	360	0	17	0	377	0	460	343	25	828	0	0	0	0	0	21	421	0	0	442	1647
% App. Total	95.5	0	4.5	0		0	55.6	41.4	3		0	0	0	0		4.8	95.2	0	0		
PHF	.849	.000	.708	.000	.842	.000	.950	.825	.625	.908	.000	.000	.000	.000	.000	.750	.907	.000	.000	.898	.936

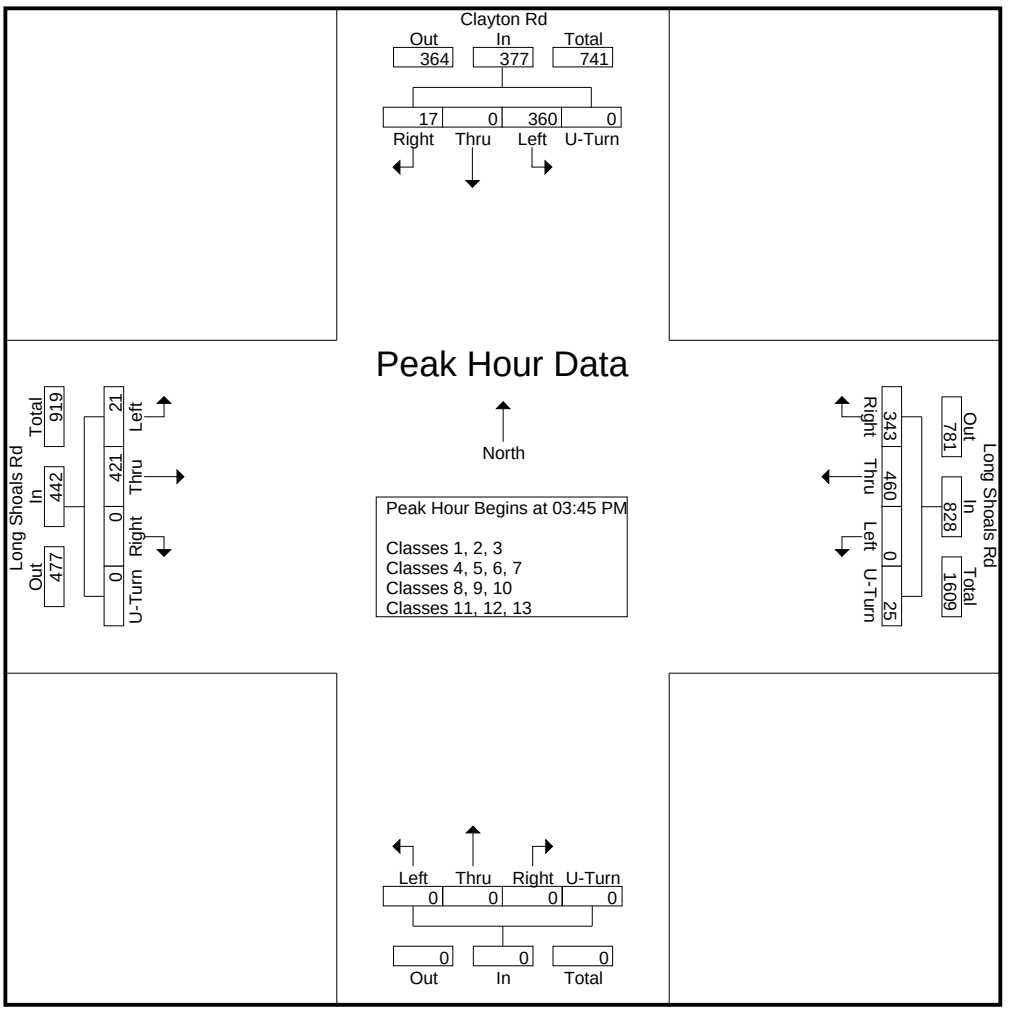

DocuSign Envelope ID: 5C03745C-4B01-4834-A65D-B77F558A4F46

Quality Counts

920 Blairhill Rd, Ste B-106
Charlotte, NC 28217

File Name : 15411715 - Clayton Rd -- Long Shoals Rd
Site Code : 15411715
Start Date : 4/20/2021
Page No : 1

Groups Printed- Classes 1, 2, 3

	Clayton Rd Southbound					Long Shoals Rd Westbound					Northbound					Long Shoals Rd Eastbound					
Start Time	Left	Thru	Right	U-Turn	App. Total	Left	Thru	Right	U-Turn	App. Total	Left	Thru	Right	U-Turn	App. Total	Left	Thru	Right	U-Turn	App. Total	Int. Total
06:00 AM	31	0	3	0	34	0	19	13	6	38	0	0	0	0	0	1	28	0	0	29	101
06:15 AM	26	0	0	0	26	0	31	15	3	49	0	0	0	0	0	2	39	0	0	41	116
06:30 AM	40	0	5	0	45	0	49	32	3	84	0	0	0	0	0	1	41	0	0	42	171
06:45 AM	36	0	4	0	40	0	90	37	8	135	0	0	0	0	0	2	46	0	0	48	223
Total	133	0	12	0	145	0	189	97	20	306	0	0	0	0	0	6	154	0	0	160	611
07:00 AM	54	0	9	0	63	0	75	31	7	113	0	0	0	0	0	1	73	0	0	74	250
07:15 AM	75	0	7	0	82	0	112	38	17	167	0	0	0	0	0	1	89	0	0	90	339
07:30 AM	87	0	8	0	95	0	130	73	11	214	0	0	0	0	0	0	136	0	0	136	445
07:45 AM	103	0	10	0	113	0	139	83	18	240	0	0	0	0	0	11	109	0	0	120	473
Total	319	0	34	0	353	0	456	225	53	734	0	0	0	0	0	13	407	0	0	420	1507
08:00 AM	82	0	4	0	86	0	94	75	7	176	0	0	0	0	0	7	104	0	0	111	373
08:15 AM	76	0	3	0	79	0	97	54	13	164	0	0	0	0	0	4	88	0	0	92	335
08:30 AM	84	0	3	0	87	0	82	48	12	142	0	0	0	0	0	4	80	0	0	84	313
08:45 AM	67	0	4	0	71	0	90	41	13	144	0	0	0	0	0	7	89	0	0	96	311
Total	309	0	14	0	323	0	363	218	45	626	0	0	0	0	0	22	361	0	0	383	1332
09:00 AM	63	0	7	0	70	0	78	37	10	125	0	0	0	0	0	4	68	0	0	72	267
09:15 AM	53	0	5	0	58	0	67	39	11	117	0	0	0	0	0	1	76	0	0	77	252
09:30 AM	54	0	4	0	58	0	58	38	6	102	0	0	0	0	0	3	86	0	0	89	249
09:45 AM	53	0	4	0	57	0	59	45	5	109	0	0	0	0	0	1	70	0	0	71	237
Total	223	0	20	0	243	0	262	159	32	453	0	0	0	0	0	9	300	0	0	309	1005
10:00 AM	36	0	2	0	38	0	57	42	7	106	0	0	0	0	0	1	67	0	0	68	212
10:15 AM	42	0	3	0	45	0	56	33	6	95	0	0	0	0	0	3	66	0	0	69	209
10:30 AM	51	0	7	0	58	0	69	37	5	111	0	0	0	0	0	3	67	0	0	70	239
10:45 AM	57	0	6	0	63	0	59	47	8	114	0	0	0	0	0	0	66	0	0	66	243
Total	186	0	18	0	204	0	241	159	26	426	0	0	0	0	0	7	266	0	0	273	903
11:00 AM	43	0	2	0	45	0	55	59	2	116	0	0	0	0	0	3	68	0	0	71	232
11:15 AM	52	0	3	0	55	0	68	55	7	130	0	0	0	0	0	4	87	0	0	91	276
11:30 AM	60	0	2	0	62	0	75	57	9	141	0	0	0	0	0	1	110	0	0	111	314
11:45 AM	47	0	5	0	52	0	87	51	7	145	0	0	0	0	0	3	84	0	0	87	284
Total	202	0	12	0	214	0	285	222	25	532	0	0	0	0	0	11	349	0	0	360	1106
12:00 PM	61	0	2	0	63	0	79	53	11	143	0	0	0	0	0	7	120	0	0	127	333
12:15 PM	71	0	3	0	74	0	101	43	5	149	0	0	0	0	0	2	101	0	0	103	326
12:30 PM	63	0	1	0	64	0	101	63	8	172	0	0	0	0	0	5	97	0	0	102	338
12:45 PM	66	0	5	0	71	0	94	55	3	152	0	0	0	0	0	0	92	0	0	92	315
Total	261	0	11	0	272	0	375	214	27	616	0	0	0	0	0	14	410	0	0	424	1312
01:00 PM	66	0	5	0	71	0	107	43	7	157	0	0	0	0	0	6	84	0	0	90	318
01:15 PM	70	0	3	0	73	0	97	75	9	181	0	0	0	0	0	3	88	0	0	91	345
01:30 PM	55	0	3	0	58	0	93	62	9	164	0	0	0	0	0	2	72	0	0	74	296
01:45 PM	60	0	4	0	64	0	97	68	12	177	0	0	0	0	0	3	82	0	0	85	326
Total	251	0	15	0	266	0	394	248	37	679	0	0	0	0	0	14	326	0	0	340	1285
02:00 PM	80	0	4	0	84	0	69	63	4	136	0	0	0	0	0	6	71	0	0	77	297
02:15 PM	73	0	8	0	81	0	86	68	7	161	0	0	0	0	0	4	66	0	0	70	312
02:30 PM	89	0	6	0	95	0	114	68	5	187	0	0	0	0	0	16	113	0	0	129	411
02:45 PM	80	0	2	0	82	0	74	60	5	139	0	0	0	0	0	4	103	0	0	107	328
Total	322	0	20	0	342	0	343	259	21	623	0	0	0	0	0	30	353	0	0	383	1348
03:00 PM	76	0	4	0	80	0	70	78	5	153	0	0	0	0	0	5	131	0	0	136	369
03:15 PM	74	0	5	0	79	0	106	76	5	187	0	0	0	0	0	5	92	0	0	97	363
03:30 PM	94	0	5	0	99	0	79	71	8	158	0	0	0	0	0	3	96	0	0	99	356

DocuSign Envelope ID: 5C03745C-4B01-4834-A65D-B77F558A4F46

Quality Counts

920 Blairhill Rd, Ste B-106
Charlotte, NC 28217

File Name : 15411715 - Clayton Rd -- Long Shoals Rd
Site Code : 15411715
Start Date : 4/20/2021
Page No : 2

Groups Printed- Classes 1, 2, 3

	Clayton Rd Southbound					Long Shoals Rd Westbound					Northbound					Long Shoals Rd Eastbound					
Start Time	Left	Thru	Right	U-Turn	App. Total	Left	Thru	Right	U-Turn	App. Total	Left	Thru	Right	U-Turn	App. Total	Left	Thru	Right	U-Turn	App. Total	Int. Total
03:45 PM	87	0	2	0	89	0	104	75	10	189	0	0	0	0	0	5	106	0	0	111	389
Total	331	0	16	0	347	0	359	300	28	687	0	0	0	0	0	18	425	0	0	443	1477
04:00 PM	101	0	4	0	105	0	100	68	6	174	0	0	0	0	0	2	79	0	0	81	360
04:15 PM	85	0	2	0	87	0	116	97	3	216	0	0	0	0	0	4	102	0	0	106	409
04:30 PM	75	0	6	0	81	0	90	80	5	175	0	0	0	0	0	5	98	0	0	103	359
04:45 PM	77	0	3	0	80	0	81	87	9	177	0	0	0	0	0	4	103	0	0	107	364
Total	338	0	15	0	353	0	387	332	23	742	0	0	0	0	0	15	382	0	0	397	1492
05:00 PM	96	0	3	0	99	0	83	83	11	177	0	0	0	0	0	6	119	0	0	125	401
05:15 PM	92	0	6	0	98	0	96	99	4	199	0	0	0	0	0	6	108	0	0	114	411
05:30 PM	102	0	2	0	104	0	103	92	8	203	0	0	0	0	0	3	65	0	0	68	375
05:45 PM	74	0	4	0	78	0	99	81	5	185	0	0	0	0	0	4	98	0	0	102	365
Total	364	0	15	0	379	0	381	355	28	764	0	0	0	0	0	19	390	0	0	409	1552
06:00 PM	75	0	4	0	79	0	92	82	11	185	0	0	0	0	0	2	78	0	0	80	344
06:15 PM	52	0	5	0	57	0	88	90	8	186	0	0	0	0	0	12	59	0	0	71	314
06:30 PM	73	0	2	0	75	0	66	64	9	139	0	0	0	0	0	2	44	0	0	46	260
06:45 PM	55	0	5	0	60	0	79	51	9	139	0	0	0	0	0	3	65	0	0	68	267
Total	255	0	16	0	271	0	325	287	37	649	0	0	0	0	0	19	246	0	0	265	1185
Grand Total	3494	0	218	0	3712	0	4360	3075	402	7837	0	0	0	0	0	197	4369	0	0	4566	16115
Apprch %	94.1	0	5.9	0		0	55.6	39.2	5.1		0	0	0	0		4.3	95.7	0	0		
Total %	21.7	0	1.4	0	23	0	27.1	19.1	2.5	48.6	0	0	0	0	0	1.2	27.1	0	0	28.3	

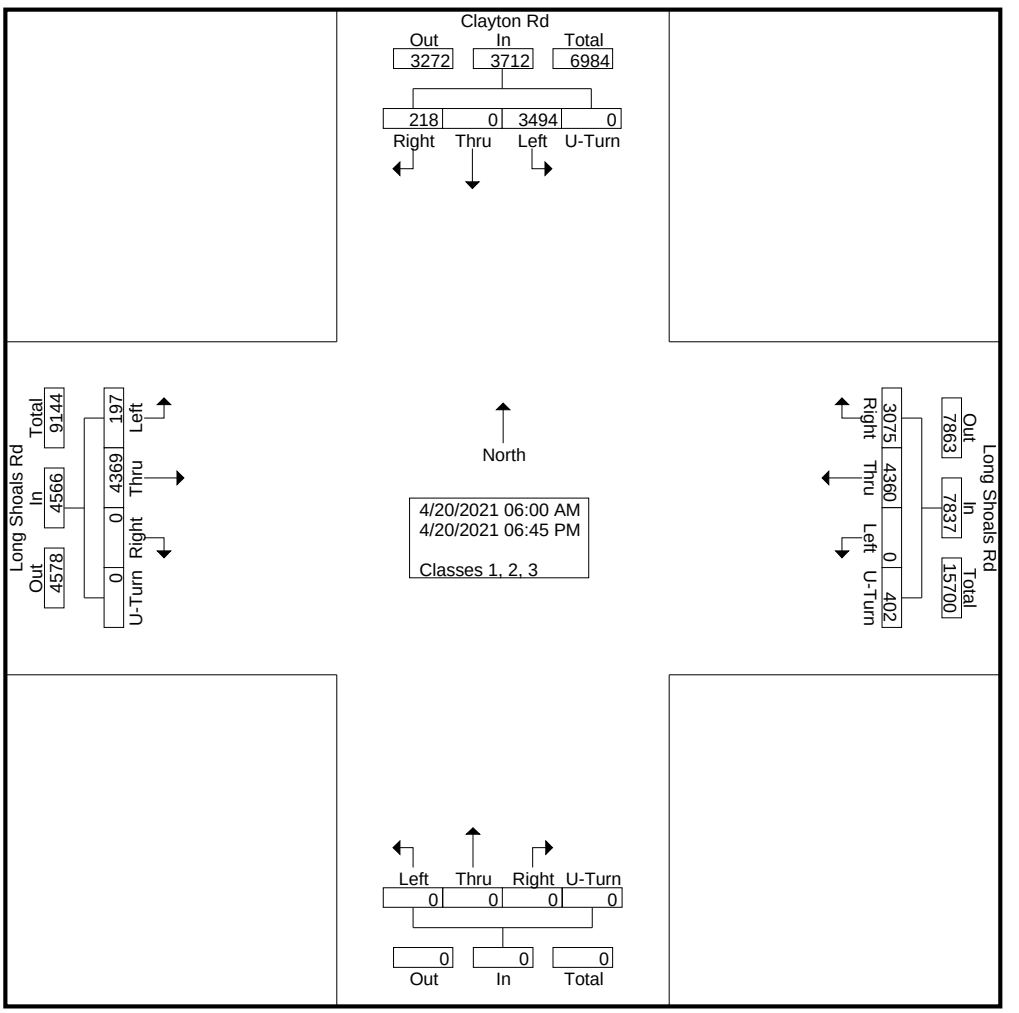

DocuSign Envelope ID: 5C03745C-4B01-4834-A65D-B77F558A4F46

Quality Counts

920 Blairhill Rd, Ste B-106
Charlotte, NC 28217

File Name : 15411715 - Clayton Rd -- Long Shoals Rd
Site Code : 15411715
Start Date : 4/20/2021
Page No : 3

	Clayton Rd Southbound					Long Shoals Rd Westbound					Northbound					Long Shoals Rd Eastbound					
Start Time	Left	Thru	Right	U-Turn	App. Total	Left	Thru	Right	U-Turn	App. Total	Left	Thru	Right	U-Turn	App. Total	Left	Thru	Right	U-Turn	App. Total	Int. Total
Peak Hour Analysis From 06:00 AM to 11:45 AM - Peak 1 of 1																					
Peak Hour for Entire Intersection Begins at 07:15 AM																					
07:15 AM	75	0	7	0	82	0	112	38	17	167	0	0	0	0	0	1	89	0	0	90	339
07:30 AM	87	0	8	0	95	0	130	73	11	214	0	0	0	0	0	0	**136**	0	0	**136**	445
07:45 AM	**103**	0	**10**	0	**113**	0	**139**	**83**	**18**	**240**	0	0	0	0	0	**11**	109	0	0	120	**473**
08:00 AM	82	0	4	0	86	0	94	75	7	176	0	0	0	0	0	7	104	0	0	111	373
Total Volume	347	0	29	0	376	0	475	269	53	797	0	0	0	0	0	19	438	0	0	457	1630
% App. Total	92.3	0	7.7	0		0	59.6	33.8	6.6		0	0	0	0		4.2	95.8	0	0		
PHF	.842	.000	.725	.000	.832	.000	.854	.810	.736	.830	.000	.000	.000	.000	.000	.432	.805	.000	.000	.840	.862

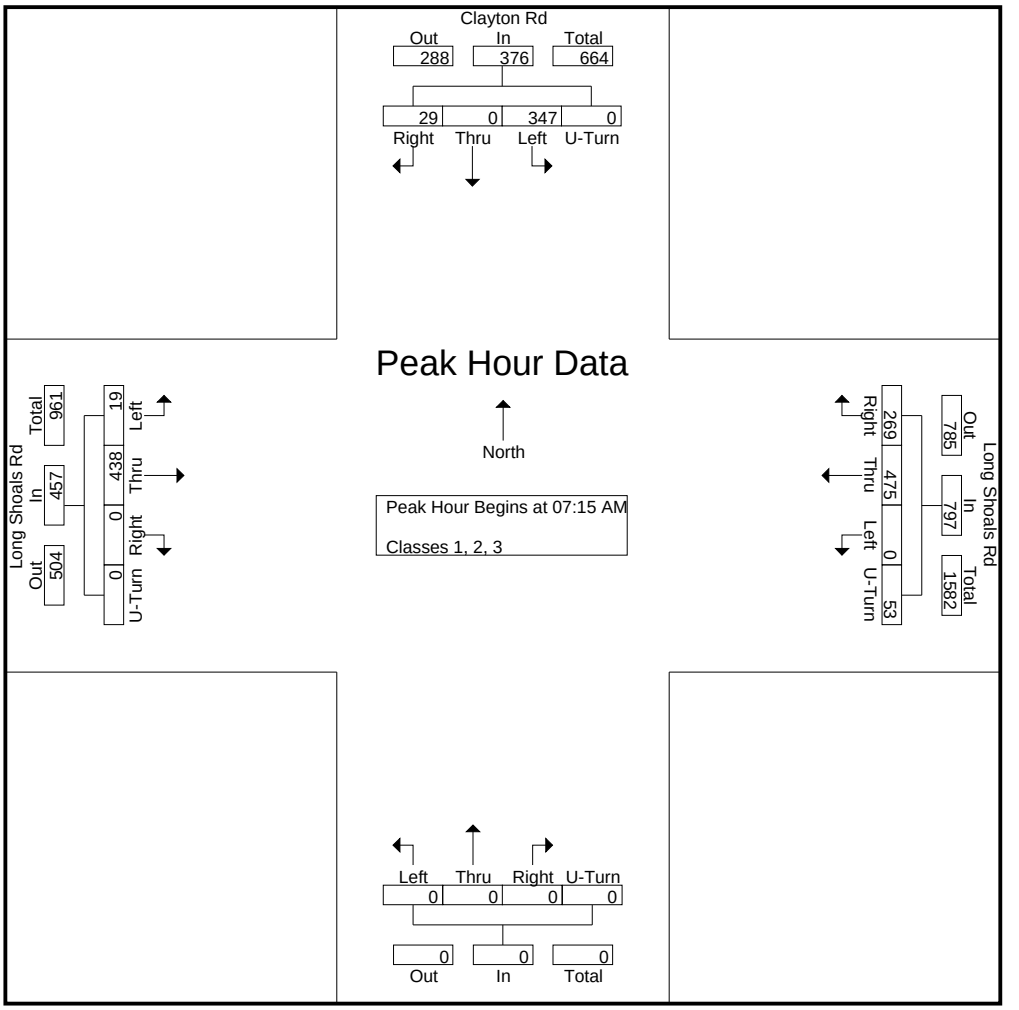

DocuSign Envelope ID: 5C03745C-4B01-4834-A65D-B77F558A4F46

Quality Counts

920 Blairhill Rd, Ste B-106
Charlotte, NC 28217

File Name : 15411715 - Clayton Rd -- Long Shoals Rd
Site Code : 15411715
Start Date : 4/20/2021
Page No : 4

	Clayton Rd Southbound					Long Shoals Rd Westbound					Northbound					Long Shoals Rd Eastbound					
Start Time	Left	Thru	Right	U-Turn	App. Total	Left	Thru	Right	U-Turn	App. Total	Left	Thru	Right	U-Turn	App. Total	Left	Thru	Right	U-Turn	App. Total	Int. Total
Peak Hour Analysis From 12:00 PM to 06:45 PM - Peak 1 of 1																					
Peak Hour for Entire Intersection Begins at 05:00 PM																					
05:00 PM	96	0	3	0	99	0	83	83	**11**	177	0	0	0	0	0	**6**	**119**	0	0	**125**	401
05:15 PM	92	0	**6**	0	98	0	96	**99**	4	199	0	0	0	0	0	6	108	0	0	114	**411**
05:30 PM	**102**	0	2	0	**104**	0	**103**	92	8	**203**	0	0	0	0	0	3	65	0	0	68	375
05:45 PM	74	0	4	0	78	0	99	81	5	185	0	0	0	0	0	4	98	0	0	102	365
Total Volume	364	0	15	0	379	0	381	355	28	764	0	0	0	0	0	19	390	0	0	409	1552
% App. Total	96	0	4	0		0	49.9	46.5	3.7		0	0	0	0		4.6	95.4	0	0		
PHF	.892	.000	.625	.000	.911	.000	.925	.896	.636	.941	.000	.000	.000	.000	.000	.792	.819	.000	.000	.818	.944

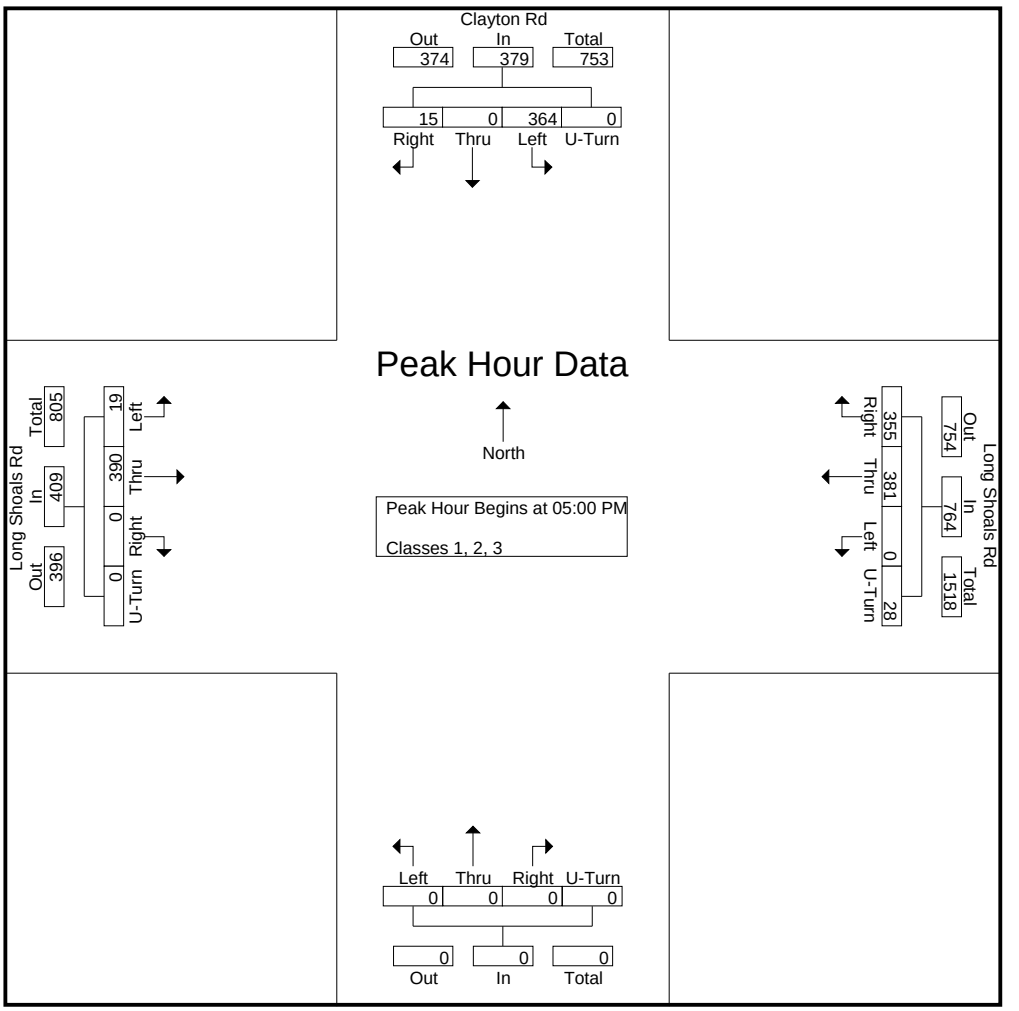

DocuSign Envelope ID: 5C03745C-4B01-4834-A65D-B77F558A4F46

Quality Counts

920 Blairhill Rd, Ste B-106
Charlotte, NC 28217

File Name : 15411715 - Clayton Rd -- Long Shoals Rd
Site Code : 15411715
Start Date : 4/20/2021
Page No : 1

Groups Printed- Classes 4, 5, 6, 7

	Clayton Rd Southbound					Long Shoals Rd Westbound					Northbound					Long Shoals Rd Eastbound					
Start Time	Left	Thru	Right	U-Turn	App. Total	Left	Thru	Right	U-Turn	App. Total	Left	Thru	Right	U-Turn	App. Total	Left	Thru	Right	U-Turn	App. Total	Int. Total
06:00 AM	1	0	1	0	2	0	1	1	0	2	0	0	0	0	0	0	2	0	0	2	6
06:15 AM	1	0	0	0	1	0	2	1	0	3	0	0	0	0	0	0	1	0	0	1	5
06:30 AM	1	0	0	0	1	0	2	0	0	2	0	0	0	0	0	0	2	0	0	2	5
06:45 AM	1	0	0	0	1	0	2	0	0	2	0	0	0	0	0	0	4	0	0	4	7
Total	4	0	1	0	5	0	7	2	0	9	0	0	0	0	0	0	9	0	0	9	23
07:00 AM	1	0	1	0	2	0	4	0	0	4	0	0	0	0	0	0	2	0	0	2	8
07:15 AM	4	0	2	0	6	0	6	2	0	8	0	0	0	0	0	0	8	0	0	8	22
07:30 AM	3	0	2	0	5	0	8	2	0	10	0	0	0	0	0	0	3	0	0	3	18
07:45 AM	4	0	2	0	6	0	10	3	0	13	0	0	0	0	0	0	10	0	0	10	29
Total	12	0	7	0	19	0	28	7	0	35	0	0	0	0	0	0	23	0	0	23	77
08:00 AM	4	0	0	0	4	0	9	0	1	10	0	0	0	0	0	0	15	0	0	15	29
08:15 AM	4	0	0	0	4	0	14	2	0	16	0	0	0	0	0	0	7	0	0	7	27
08:30 AM	3	0	1	0	4	0	11	1	0	12	0	0	0	0	0	0	19	0	0	19	35
08:45 AM	2	0	0	0	2	0	15	3	0	18	0	0	0	0	0	0	9	0	0	9	29
Total	13	0	1	0	14	0	49	6	1	56	0	0	0	0	0	0	50	0	0	50	120
09:00 AM	4	0	0	0	4	0	6	2	0	8	0	0	0	0	0	0	2	0	0	2	14
09:15 AM	3	0	0	0	3	0	10	2	0	12	0	0	0	0	0	0	13	0	0	13	28
09:30 AM	4	0	1	0	5	0	4	2	0	6	0	0	0	0	0	0	8	0	0	8	19
09:45 AM	4	0	0	0	4	0	14	2	0	16	0	0	0	0	0	0	10	0	0	10	30
Total	15	0	1	0	16	0	34	8	0	42	0	0	0	0	0	0	33	0	0	33	91
10:00 AM	1	0	0	0	1	0	17	1	1	19	0	0	0	0	0	0	8	0	0	8	28
10:15 AM	1	0	0	0	1	0	8	3	0	11	0	0	0	0	0	0	9	0	0	9	21
10:30 AM	2	0	0	0	2	0	7	2	0	9	0	0	0	0	0	1	13	0	0	14	25
10:45 AM	3	0	0	0	3	0	13	3	0	16	0	0	0	0	0	0	10	0	0	10	29
Total	7	0	0	0	7	0	45	9	1	55	0	0	0	0	0	1	40	0	0	41	103
11:00 AM	0	0	1	0	1	0	11	2	0	13	0	0	0	0	0	0	2	0	0	2	16
11:15 AM	3	0	1	0	4	0	14	5	0	19	0	0	0	0	0	0	13	0	0	13	36
11:30 AM	2	0	0	0	2	0	8	1	0	9	0	0	0	0	0	0	6	0	0	6	17
11:45 AM	3	0	0	0	3	0	9	0	0	9	0	0	0	0	0	0	15	0	0	15	27
Total	8	0	2	0	10	0	42	8	0	50	0	0	0	0	0	0	36	0	0	36	96
12:00 PM	3	0	0	0	3	0	18	1	0	19	0	0	0	0	0	0	12	0	0	12	34
12:15 PM	0	0	1	0	1	0	14	2	0	16	0	0	0	0	0	0	8	0	0	8	25
12:30 PM	4	0	0	0	4	0	5	2	0	7	0	0	0	0	0	0	8	0	0	8	19
12:45 PM	3	0	0	0	3	0	18	3	1	22	0	0	0	0	0	0	6	0	0	6	31
Total	10	0	1	0	11	0	55	8	1	64	0	0	0	0	0	0	34	0	0	34	109
01:00 PM	0	0	0	0	0	0	11	4	0	15	0	0	0	0	0	1	7	0	0	8	23
01:15 PM	5	0	1	0	6	0	14	2	0	16	0	0	0	0	0	1	16	0	0	17	39
01:30 PM	2	0	0	0	2	0	4	1	0	5	0	0	0	0	0	0	9	0	0	9	16
01:45 PM	0	0	0	0	0	0	9	2	0	11	0	0	0	0	0	0	9	0	0	9	20
Total	7	0	1	0	8	0	38	9	0	47	0	0	0	0	0	2	41	0	0	43	98
02:00 PM	1	0	0	0	1	0	18	0	0	18	0	0	0	0	0	0	4	0	0	4	23
02:15 PM	6	0	0	0	6	0	9	2	0	11	0	0	0	0	0	1	10	0	0	11	28
02:30 PM	0	0	0	0	0	0	9	4	0	13	0	0	0	0	0	0	17	0	0	17	30
02:45 PM	1	0	1	0	2	0	5	2	0	7	0	0	0	0	0	0	6	0	0	6	15
Total	8	0	1	0	9	0	41	8	0	49	0	0	0	0	0	1	37	0	0	38	96
03:00 PM	2	0	1	0	3	0	20	5	0	25	0	0	0	0	0	0	10	0	0	10	38
03:15 PM	2	0	1	0	3	0	11	3	0	14	0	0	0	0	0	0	2	0	0	2	19
03:30 PM	2	0	0	0	2	0	4	4	0	8	0	0	0	0	0	3	15	0	0	18	28

DocuSign Envelope ID: 5C03745C-4B01-4834-A65D-B77F558A4F46

Quality Counts

920 Blairhill Rd, Ste B-106
Charlotte, NC 28217

File Name : 15411715 - Clayton Rd -- Long Shoals Rd
Site Code : 15411715
Start Date : 4/20/2021

Groups Printed- Classes 4, 5, 6, 7

	Clayton Rd Southbound					Long Shoals Rd Westbound					Northbound					Long Shoals Rd Eastbound					
Start Time	Left	Thru	Right	U-Turn	App. Total	Left	Thru	Right	U-Turn	App. Total	Left	Thru	Right	U-Turn	App. Total	Left	Thru	Right	U-Turn	App. Total	Int. Total
03:45 PM	3	0	0	0	3	0	13	3	0	16	0	0	0	0	0	0	5	0	0	5	24
Total	9	0	2	0	11	0	48	15	0	63	0	0	0	0	0	3	32	0	0	35	109
04:00 PM	5	0	2	0	7	0	11	4	1	16	0	0	0	0	0	1	3	0	0	4	27
04:15 PM	1	0	1	0	2	0	5	4	0	9	0	0	0	0	0	3	12	0	0	15	26
04:30 PM	2	0	0	0	2	0	13	6	0	19	0	0	0	0	0	0	4	0	0	4	25
04:45 PM	2	0	0	0	2	0	6	1	1	8	0	0	0	0	0	0	5	0	0	5	15
Total	10	0	3	0	13	0	35	15	2	52	0	0	0	0	0	4	24	0	0	28	93
05:00 PM	3	0	0	0	3	0	3	2	0	5	0	0	0	0	0	1	4	0	0	5	13
05:15 PM	0	0	0	0	0	0	2	3	0	5	0	0	0	0	0	0	1	0	0	1	6
05:30 PM	3	0	1	0	4	0	5	3	0	8	0	0	0	0	0	0	1	0	0	1	13
05:45 PM	1	0	0	0	1	0	5	3	0	8	0	0	0	0	0	0	5	0	0	5	14
Total	7	0	1	0	8	0	15	11	0	26	0	0	0	0	0	1	11	0	0	12	46
06:00 PM	2	0	0	0	2	0	2	4	0	6	0	0	0	0	0	0	4	0	0	4	12
06:15 PM	3	0	0	0	3	0	4	1	0	5	0	0	0	0	0	2	1	0	0	3	11
06:30 PM	1	0	0	0	1	0	2	0	0	2	0	0	0	0	0	0	0	0	0	0	3
06:45 PM	1	0	0	0	1	0	9	1	0	10	0	0	0	0	0	0	1	0	0	1	12
Total	7	0	0	0	7	0	17	6	0	23	0	0	0	0	0	2	6	0	0	8	38
Grand Total	117	0	21	0	138	0	454	112	5	571	0	0	0	0	0	14	376	0	0	390	1099
Apprch %	84.8	0	15.2	0		0	79.5	19.6	0.9		0	0	0	0		3.6	96.4	0	0		
Total %	10.6	0	1.9	0	12.6	0	41.3	10.2	0.5	52	0	0	0	0	0	1.3	34.2	0	0	35.5	

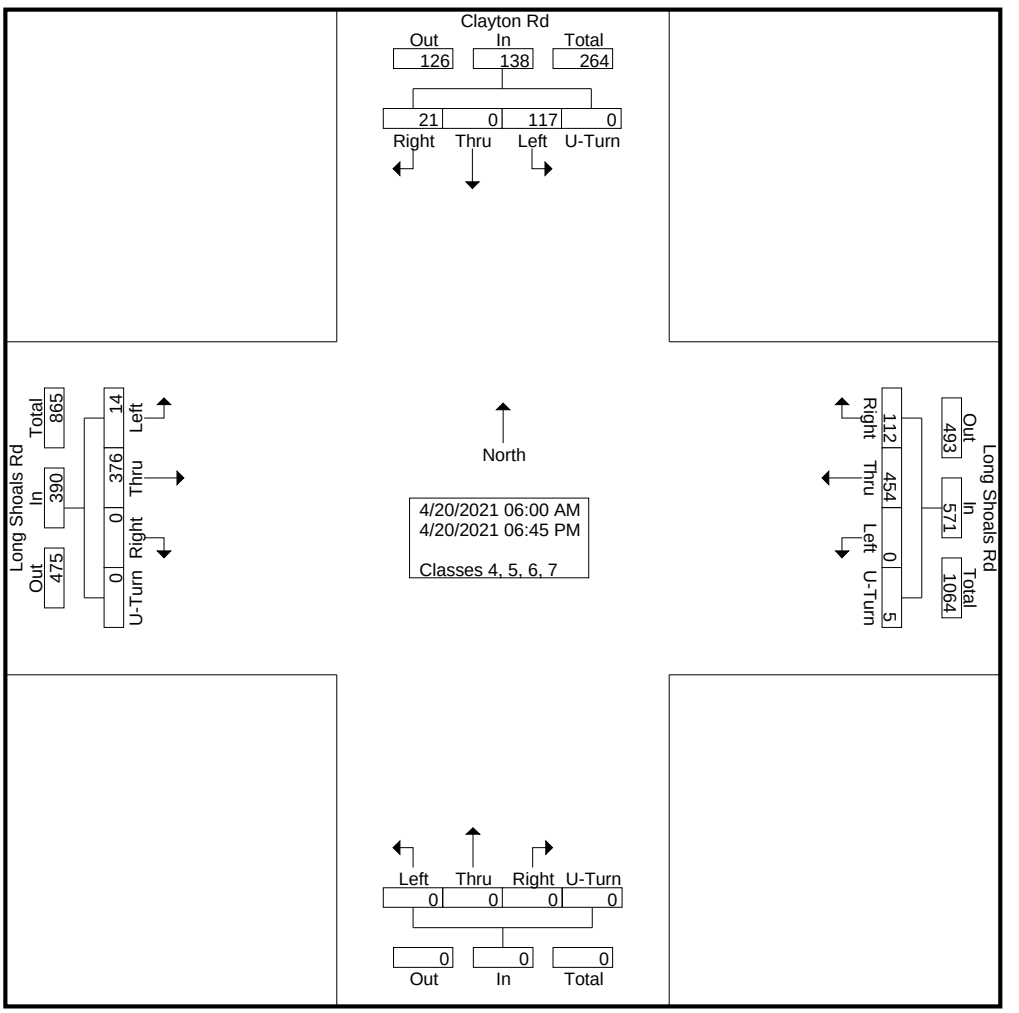

DocuSign Envelope ID: 5C03745C-4B01-4834-A65D-B77F558A4F46

Quality Counts

920 Blairhill Rd, Ste B-106
Charlotte, NC 28217

File Name : 15411715 - Clayton Rd -- Long Shoals Rd
Site Code : 15411715
Start Date : 4/20/2021
Page No : 3

	Clayton Rd Southbound					Long Shoals Rd Westbound					Northbound					Long Shoals Rd Eastbound					
Start Time	Left	Thru	Right	U-Turn	App. Total	Left	Thru	Right	U-Turn	App. Total	Left	Thru	Right	U-Turn	App. Total	Left	Thru	Right	U-Turn	App. Total	Int. Total
Peak Hour Analysis From 06:00 AM to 11:45 AM - Peak 1 of 1																					
Peak Hour for Entire Intersection Begins at 07:45 AM																					
07:45 AM	**4**	0	**2**	0	**6**	0	10	**3**	0	13	0	0	0	0	0	0	10	0	0	10	29
08:00 AM	4	0	0	0	4	0	9	0	**1**	10	0	0	0	0	0	0	15	0	0	15	29
08:15 AM	4	0	0	0	4	0	**14**	2	0	**16**	0	0	0	0	0	0	7	0	0	7	27
08:30 AM	3	0	1	0	4	0	11	1	0	12	0	0	0	0	0	0	**19**	0	0	**19**	**35**
Total Volume	15	0	3	0	18	0	44	6	1	51	0	0	0	0	0	0	51	0	0	51	120
% App. Total	83.3	0	16.7	0		0	86.3	11.8	2		0	0	0	0		0	100	0	0		
PHF	.938	.000	.375	.000	.750	.000	.786	.500	.250	.797	.000	.000	.000	.000	.000	.000	.671	.000	.000	.671	.857

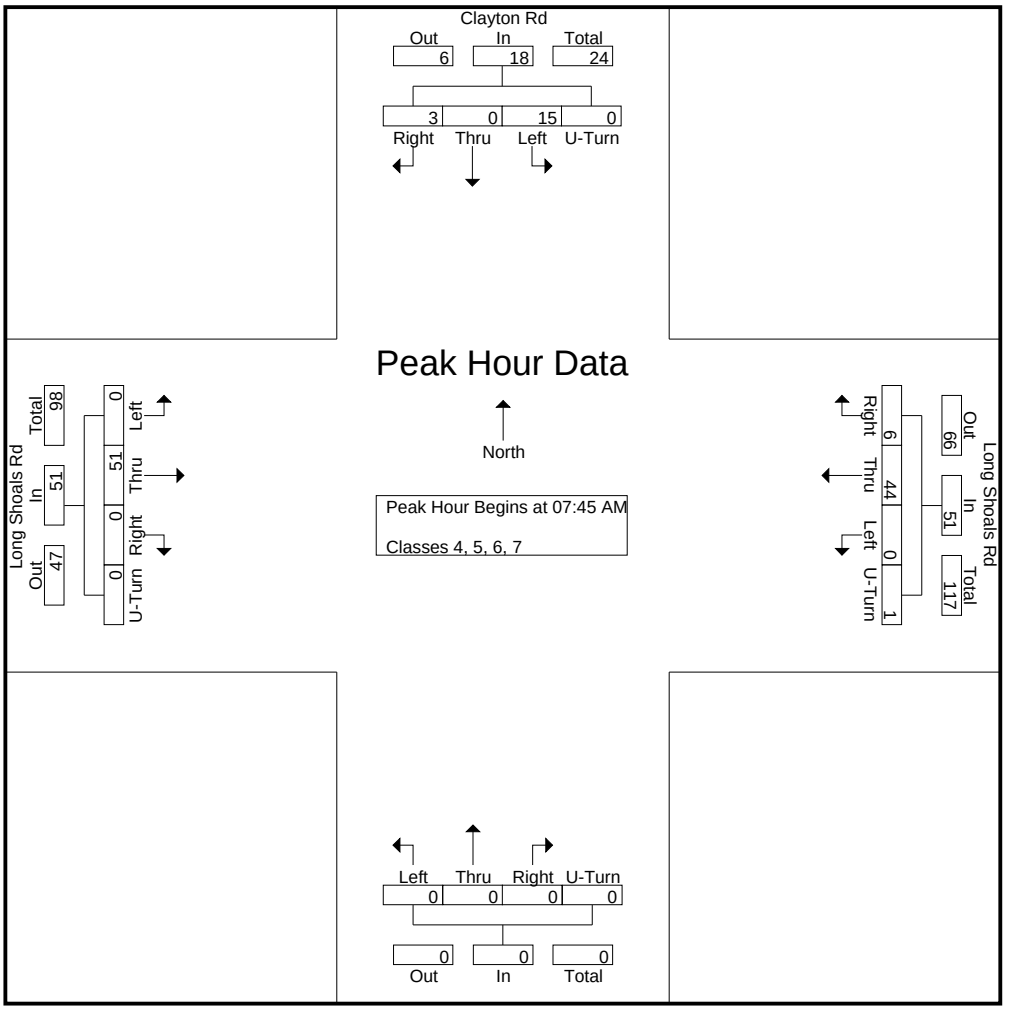

DocuSign Envelope ID: 5C03745C-4B01-4834-A65D-B77F558A4F46

Quality Counts

920 Blairhill Rd, Ste B-106
Charlotte, NC 28217

File Name : 15411715 - Clayton Rd -- Long Shoals Rd
Site Code : 15411715
Start Date : 4/20/2021
Page No : 4

	Clayton Rd Southbound					Long Shoals Rd Westbound					Northbound					Long Shoals Rd Eastbound					
Start Time	Left	Thru	Right	U-Turn	App. Total	Left	Thru	Right	U-Turn	App. Total	Left	Thru	Right	U-Turn	App. Total	Left	Thru	Right	U-Turn	App. Total	Int. Total
Peak Hour Analysis From 12:00 PM to 06:45 PM - Peak 1 of 1																					
Peak Hour for Entire Intersection Begins at 12:30 PM																					
12:30 PM	4	0	0	0	4	0	5	2	0	7	0	0	0	0	0	0	8	0	0	8	19
12:45 PM	3	0	0	0	3	0	**18**	3	**1**	**22**	0	0	0	0	0	0	6	0	0	6	31
01:00 PM	0	0	0	0	0	0	11	**4**	0	15	0	0	0	0	0	**1**	7	0	0	8	23
01:15 PM	**5**	0	**1**	0	**6**	0	14	2	0	16	0	0	0	0	0	1	**16**	0	0	**17**	**39**
Total Volume	12	0	1	0	13	0	48	11	1	60	0	0	0	0	0	2	37	0	0	39	112
% App. Total	92.3	0	7.7	0		0	80	18.3	1.7		0	0	0	0		5.1	94.9	0	0		
PHF	.600	.000	.250	.000	.542	.000	.667	.688	.250	.682	.000	.000	.000	.000	.000	.500	.578	.000	.000	.574	.718

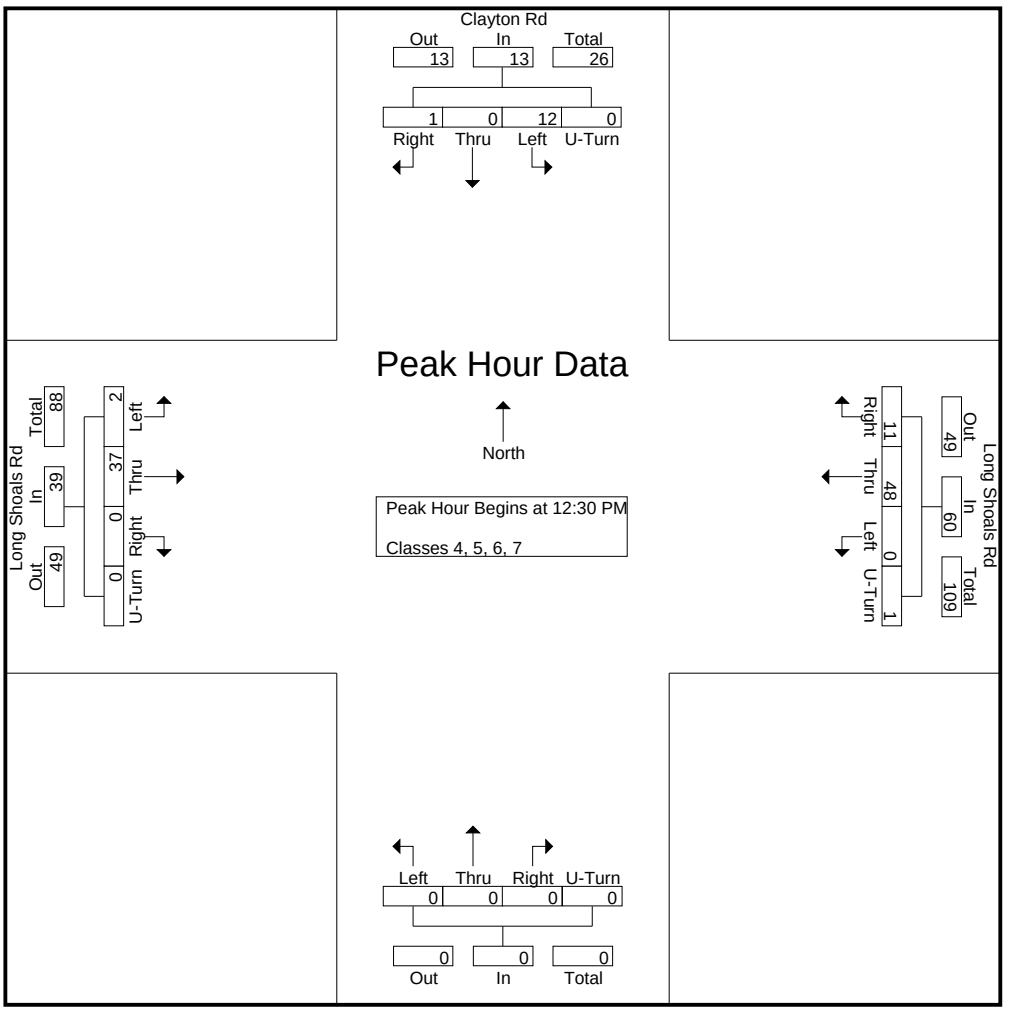

DocuSign Envelope ID: 5C03745C-4B01-4834-A65D-B77F558A4F46

Quality Counts

920 Blairhill Rd, Ste B-106
Charlotte, NC 28217

File Name : 15411715 - Clayton Rd -- Long Shoals Rd
Site Code : 15411715
Start Date : 4/20/2021
Page No : 1

Groups Printed- Classes 8, 9, 10

	Clayton Rd Southbound					Long Shoals Rd Westbound					Northbound					Long Shoals Rd Eastbound					
Start Time	Left	Thru	Right	U-Turn	App. Total	Left	Thru	Right	U-Turn	App. Total	Left	Thru	Right	U-Turn	App. Total	Left	Thru	Right	U-Turn	App. Total	Int. Total
06:00 AM	1	0	0	0	1	0	0	0	0	0	0	0	0	0	0	0	2	0	0	2	3
06:15 AM	0	0	0	0	0	0	0	0	0	0	0	0	0	0	0	0	1	0	0	1	1
06:30 AM	1	0	0	0	1	0	1	0	0	1	0	0	0	0	0	0	0	0	0	0	2
06:45 AM	0	0	0	0	0	0	3	0	0	3	0	0	0	0	0	0	1	0	0	1	4
Total	2	0	0	0	2	0	4	0	0	4	0	0	0	0	0	0	4	0	0	4	10
07:00 AM	2	0	0	0	2	0	4	0	0	4	0	0	0	0	0	0	0	0	0	0	6
07:15 AM	0	0	0	0	0	0	1	0	0	1	0	0	0	0	0	0	0	0	0	0	1
07:30 AM	0	0	0	0	0	0	2	0	0	2	0	0	0	0	0	0	1	0	0	1	3
07:45 AM	1	0	0	0	1	0	4	0	0	4	0	0	0	0	0	0	5	0	0	5	10
Total	3	0	0	0	3	0	11	0	0	11	0	0	0	0	0	0	6	0	0	6	20
08:00 AM	1	0	0	0	1	0	4	1	0	5	0	0	0	0	0	0	1	0	0	1	7
08:15 AM	0	0	0	0	0	0	1	1	0	2	0	0	0	0	0	0	2	0	0	2	4
08:30 AM	0	0	0	0	0	0	1	0	0	1	0	0	0	0	0	0	1	0	0	1	2
08:45 AM	3	0	0	0	3	0	2	2	0	4	0	0	0	0	0	0	5	0	0	5	12
Total	4	0	0	0	4	0	8	4	0	12	0	0	0	0	0	0	9	0	0	9	25
09:00 AM	1	0	0	0	1	0	4	1	0	5	0	0	0	0	0	0	2	0	0	2	8
09:15 AM	0	0	0	0	0	0	5	0	0	5	0	0	0	0	0	0	3	0	0	3	8
09:30 AM	1	0	0	0	1	0	2	1	0	3	0	0	0	0	0	1	2	0	0	3	7
09:45 AM	0	0	0	0	0	0	2	0	0	2	0	0	0	0	0	0	2	0	0	2	4
Total	2	0	0	0	2	0	13	2	0	15	0	0	0	0	0	1	9	0	0	10	27
10:00 AM	1	0	0	0	1	0	2	4	0	6	0	0	0	0	0	0	1	0	0	1	8
10:15 AM	0	0	1	0	1	0	4	0	0	4	0	0	0	0	0	0	2	0	0	2	7
10:30 AM	1	0	1	0	2	0	4	0	0	4	0	0	0	0	0	0	3	0	0	3	9
10:45 AM	0	0	0	0	0	0	2	1	0	3	0	0	0	0	0	0	4	0	0	4	7
Total	2	0	2	0	4	0	12	5	0	17	0	0	0	0	0	0	10	0	0	10	31
11:00 AM	0	0	0	0	0	0	1	4	0	5	0	0	0	0	0	1	3	0	0	4	9
11:15 AM	2	0	0	0	2	0	1	2	0	3	0	0	0	0	0	0	3	0	0	3	8
11:30 AM	1	0	1	0	2	0	0	1	0	1	0	0	0	0	0	1	5	0	0	6	9
11:45 AM	0	0	0	0	0	0	3	0	0	3	0	0	0	0	0	0	4	0	0	4	7
Total	3	0	1	0	4	0	5	7	0	12	0	0	0	0	0	2	15	0	0	17	33
12:00 PM	0	0	0	0	0	0	4	0	0	4	0	0	0	0	0	0	3	0	0	3	7
12:15 PM	1	0	0	0	1	0	5	1	0	6	0	0	0	0	0	0	2	0	0	2	9
12:30 PM	1	0	0	0	1	0	2	0	0	2	0	0	0	0	0	0	3	0	0	3	6
12:45 PM	0	0	0	0	0	0	1	1	0	2	0	0	0	0	0	0	2	0	0	2	4
Total	2	0	0	0	2	0	12	2	0	14	0	0	0	0	0	0	10	0	0	10	26
01:00 PM	2	0	0	0	2	0	1	2	0	3	0	0	0	0	0	0	0	0	0	0	5
01:15 PM	0	0	0	0	0	0	5	0	0	5	0	0	0	0	0	0	2	0	0	2	7
01:30 PM	1	0	0	0	1	0	2	1	0	3	0	0	0	0	0	0	4	0	0	4	8
01:45 PM	2	0	0	0	2	0	1	0	0	1	0	0	0	0	0	0	2	0	0	2	5
Total	5	0	0	0	5	0	9	3	0	12	0	0	0	0	0	0	8	0	0	8	25
02:00 PM	1	0	0	0	1	0	2	1	0	3	0	0	0	0	0	0	5	0	0	5	9
02:15 PM	0	0	0	0	0	0	4	0	0	4	0	0	0	0	0	0	2	0	0	2	6
02:30 PM	1	0	0	0	1	0	2	1	0	3	0	0	0	0	0	0	0	0	0	0	4
02:45 PM	1	0	0	0	1	0	4	0	0	4	0	0	0	0	0	0	0	0	0	0	5
Total	3	0	0	0	3	0	12	2	0	14	0	0	0	0	0	0	7	0	0	7	24
03:00 PM	0	0	0	0	0	0	2	2	0	4	0	0	0	0	0	0	1	0	0	1	5
03:15 PM	0	0	1	0	1	0	2	1	0	3	0	0	0	0	0	1	4	0	0	5	9
03:30 PM	0	0	0	0	0	0	2	2	0	4	0	0	0	0	0	0	1	0	0	1	5

DocuSign Envelope ID: 5C03745C-4B01-4834-A65D-B77F558A4F46

Quality Counts

920 Blairhill Rd, Ste B-106
Charlotte, NC 28217

File Name : 15411715 - Clayton Rd -- Long Shoals Rd
Site Code : 15411715
Start Date : 4/20/2021

Groups Printed- Classes 8, 9, 10

	Clayton Rd Southbound					Long Shoals Rd Westbound					Northbound					Long Shoals Rd Eastbound					
Start Time	Left	Thru	Right	U-Turn	App. Total	Left	Thru	Right	U-Turn	App. Total	Left	Thru	Right	U-Turn	App. Total	Left	Thru	Right	U-Turn	App. Total	Int. Total
03:45 PM	1	0	0	0	1	0	0	1	0	1	0	0	0	0	0	0	1	0	0	1	3
Total	1	0	1	0	2	0	6	6	0	12	0	0	0	0	0	1	7	0	0	8	22
04:00 PM	0	0	0	0	0	0	4	0	0	4	0	0	0	0	0	0	3	0	0	3	7
04:15 PM	0	0	0	0	0	0	0	3	0	3	0	0	0	0	0	0	2	0	0	2	5
04:30 PM	0	0	0	0	0	0	4	2	0	6	0	0	0	0	0	1	6	0	0	7	13
04:45 PM	0	0	0	0	0	0	1	0	0	1	0	0	0	0	0	0	1	0	0	1	2
Total	0	0	0	0	0	0	9	5	0	14	0	0	0	0	0	1	12	0	0	13	27
05:00 PM	0	0	0	0	0	0	3	1	0	4	0	0	0	0	0	0	3	0	0	3	7
05:15 PM	2	0	0	0	2	0	0	2	0	2	0	0	0	0	0	0	2	0	0	2	6
05:30 PM	0	0	0	0	0	0	2	2	0	4	0	0	0	0	0	0	5	0	0	5	9
05:45 PM	2	0	0	0	2	0	2	1	0	3	0	0	0	0	0	0	3	0	0	3	8
Total	4	0	0	0	4	0	7	6	0	13	0	0	0	0	0	0	13	0	0	13	30
06:00 PM	0	0	0	0	0	0	0	1	0	1	0	0	0	0	0	0	0	0	0	0	1
06:15 PM	0	0	0	0	0	0	0	0	0	0	0	0	0	0	0	0	3	0	0	3	3
06:30 PM	1	0	0	0	1	0	3	0	0	3	0	0	0	0	0	0	0	0	0	0	4
06:45 PM	0	0	0	0	0	0	0	0	0	0	0	0	0	0	0	0	1	0	0	1	1
Total	1	0	0	0	1	0	3	1	0	4	0	0	0	0	0	0	4	0	0	4	9
Grand Total	32	0	4	0	36	0	111	43	0	154	0	0	0	0	0	5	114	0	0	119	309
Apprch %	88.9	0	11.1	0		0	72.1	27.9	0		0	0	0	0		4.2	95.8	0	0		
Total %	10.4	0	1.3	0	11.7	0	35.9	13.9	0	49.8	0	0	0	0	0	1.6	36.9	0	0	38.5	

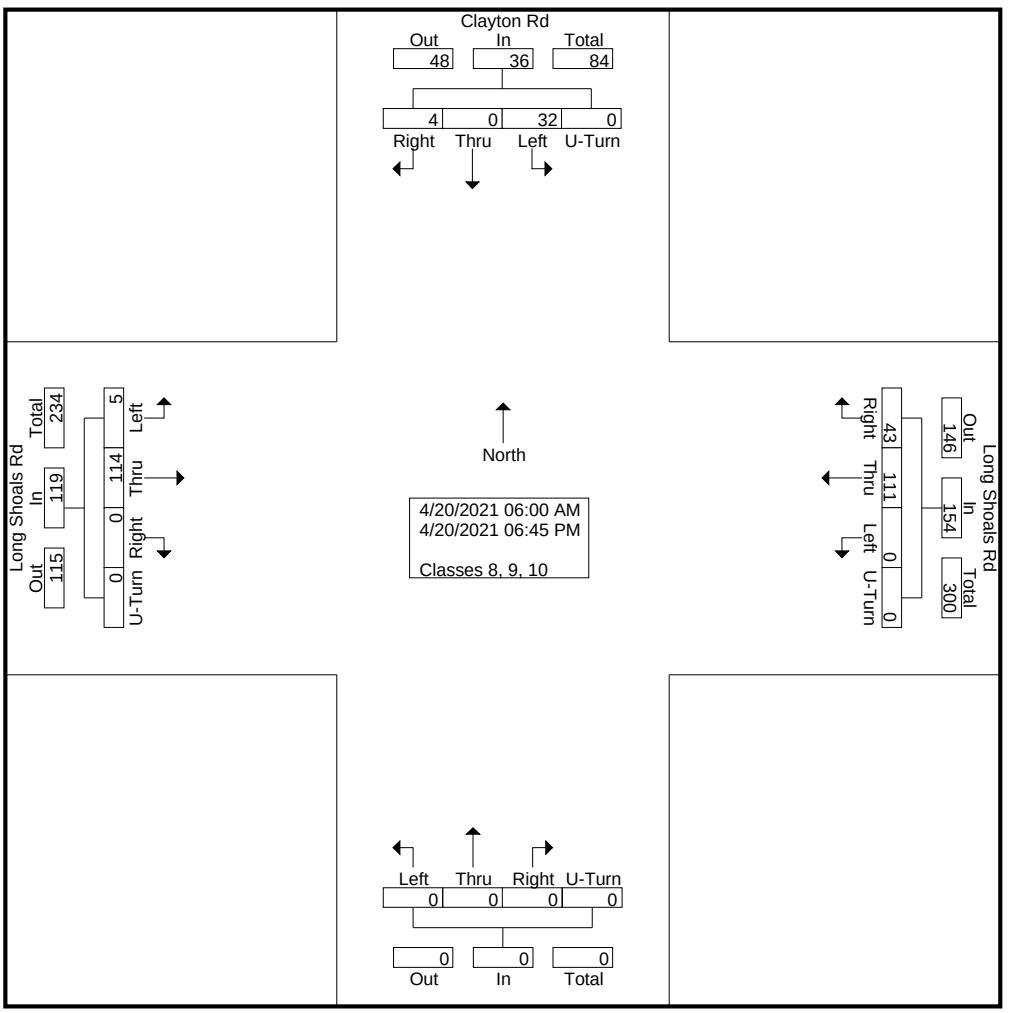

DocuSign Envelope ID: 5C03745C-4B01-4834-A65D-B77F558A4F46

Quality Counts

920 Blairhill Rd, Ste B-106
Charlotte, NC 28217

File Name : 15411715 - Clayton Rd -- Long Shoals Rd
Site Code : 15411715
Start Date : 4/20/2021
Page No : 3

	Clayton Rd Southbound					Long Shoals Rd Westbound					Northbound					Long Shoals Rd Eastbound					
Start Time	Left	Thru	Right	U-Turn	App. Total	Left	Thru	Right	U-Turn	App. Total	Left	Thru	Right	U-Turn	App. Total	Left	Thru	Right	U-Turn	App. Total	Int. Total
Peak Hour Analysis From 06:00 AM to 11:45 AM - Peak 1 of 1																					
Peak Hour for Entire Intersection Begins at 08:45 AM																					
08:45 AM	**3**	0	0	0	**3**	0	2	**2**	0	4	0	0	0	0	0	0	**5**	0	0	**5**	**12**
09:00 AM	1	0	0	0	1	0	4	1	0	**5**	0	0	0	0	0	0	2	0	0	2	8
09:15 AM	0	0	0	0	0	0	**5**	0	0	5	0	0	0	0	0	0	3	0	0	3	8
09:30 AM	1	0	0	0	1	0	2	1	0	3	0	0	0	0	0	**1**	2	0	0	3	7
Total Volume	5	0	0	0	5	0	13	4	0	17	0	0	0	0	0	1	12	0	0	13	35
% App. Total	100	0	0	0		0	76.5	23.5	0		0	0	0	0		7.7	92.3	0	0		
PHF	.417	.000	.000	.000	.417	.000	.650	.500	.000	.850	.000	.000	.000	.000	.000	.250	.600	.000	.000	.650	.729

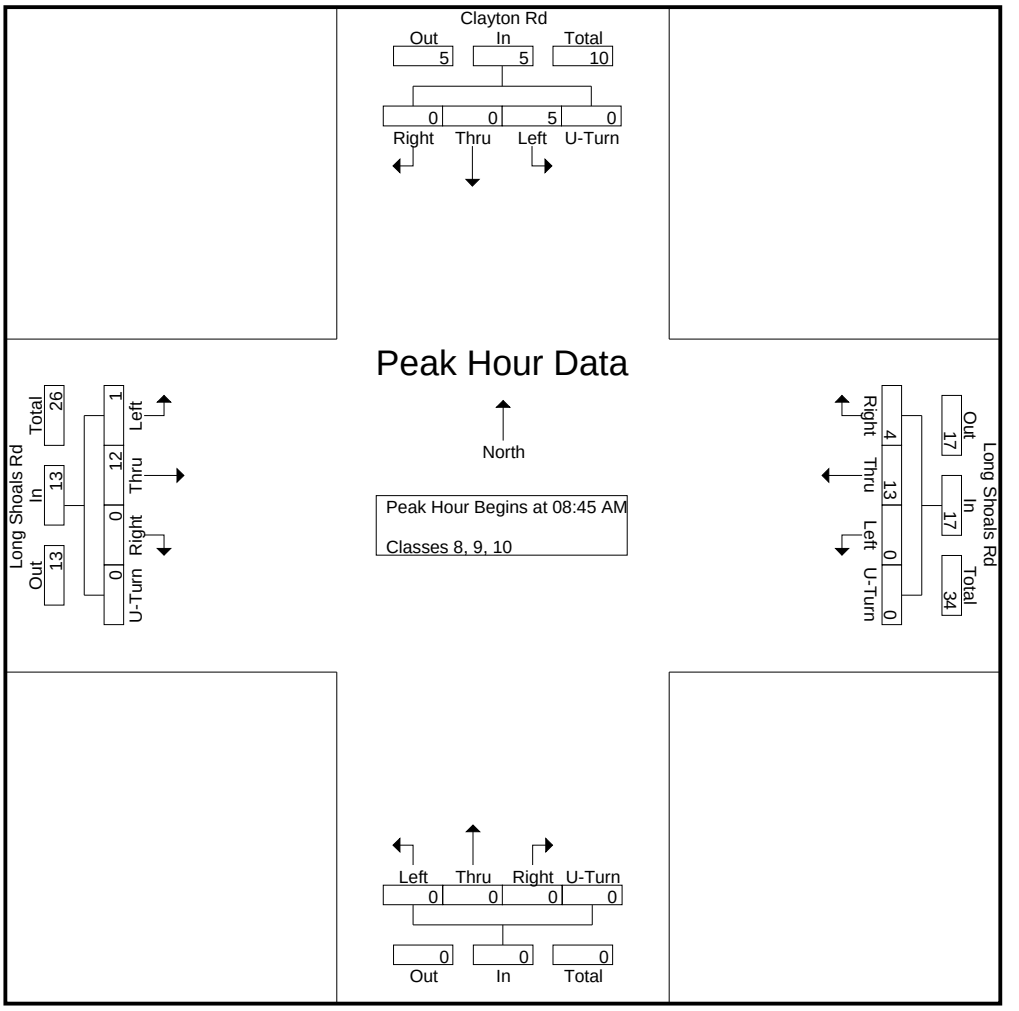

DocuSign Envelope ID: 5C03745C-4B01-4834-A65D-B77F558A4F46

Quality Counts

920 Blairhill Rd, Ste B-106
Charlotte, NC 28217

File Name : 15411715 - Clayton Rd -- Long Shoals Rd
Site Code : 15411715
Start Date : 4/20/2021
Page No : 4

	Clayton Rd Southbound					Long Shoals Rd Westbound					Northbound					Long Shoals Rd Eastbound					
Start Time	Left	Thru	Right	U-Turn	App. Total	Left	Thru	Right	U-Turn	App. Total	Left	Thru	Right	U-Turn	App. Total	Left	Thru	Right	U-Turn	App. Total	Int. Total
Peak Hour Analysis From 12:00 PM to 06:45 PM - Peak 1 of 1																					
Peak Hour for Entire Intersection Begins at 05:00 PM																					
05:00 PM	0	0	0	0	0	0	**3**	1	0	**4**	0	0	0	0	0	0	3	0	0	3	7
05:15 PM	**2**	0	0	0	**2**	0	0	**2**	0	2	0	0	0	0	0	0	2	0	0	2	6
05:30 PM	0	0	0	0	0	0	2	2	0	4	0	0	0	0	0	0	**5**	0	0	**5**	**9**
05:45 PM	2	0	0	0	2	0	2	1	0	3	0	0	0	0	0	0	3	0	0	3	8
Total Volume	4	0	0	0	4	0	7	6	0	13	0	0	0	0	0	0	13	0	0	13	30
% App. Total	100	0	0	0		0	53.8	46.2	0		0	0	0	0		0	100	0	0		
PHF	.500	.000	.000	.000	.500	.000	.583	.750	.000	.813	.000	.000	.000	.000	.000	.000	.650	.000	.000	.650	.833

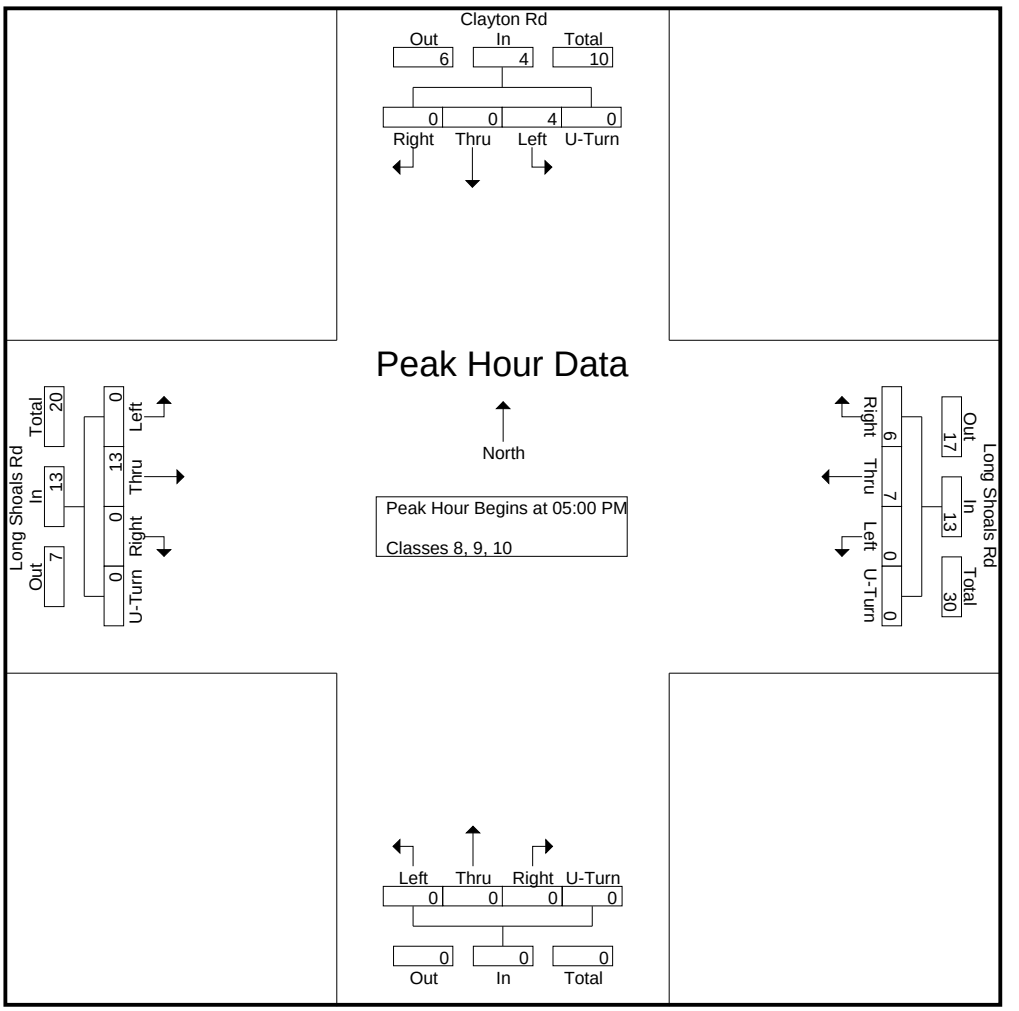

DocuSign Envelope ID: 5C03745C-4B01-4834-A65D-B77F558A4F46

Quality Counts

920 Blairhill Rd, Ste B-106
Charlotte, NC 28217

File Name : 15411715 - Clayton Rd -- Long Shoals Rd
Site Code : 15411715
Start Date : 4/20/2021
Page No : 1

Groups Printed- Classes 11, 12, 13

	Clayton Rd Southbound					Long Shoals Rd Westbound					Northbound					Long Shoals Rd Eastbound					
Start Time	Left	Thru	Right	U-Turn	App. Total	Left	Thru	Right	U-Turn	App. Total	Left	Thru	Right	U-Turn	App. Total	Left	Thru	Right	U-Turn	App. Total	Int. Total
06:00 AM	0	0	0	0	0	0	0	0	0	0	0	0	0	0	0	0	0	0	0	0	0
06:15 AM	0	0	0	0	0	0	0	0	0	0	0	0	0	0	0	0	0	0	0	0	0
06:30 AM	0	0	0	0	0	0	0	0	0	0	0	0	0	0	0	0	0	0	0	0	0
06:45 AM	0	0	0	0	0	0	0	0	0	0	0	0	0	0	0	0	0	0	0	0	0
Total	0	0	0	0	0	0	0	0	0	0	0	0	0	0	0	0	0	0	0	0	0
07:00 AM	0	0	0	0	0	0	0	0	0	0	0	0	0	0	0	0	0	0	0	0	0
07:15 AM	0	0	0	0	0	0	0	0	0	0	0	0	0	0	0	0	0	0	0	0	0
07:30 AM	0	0	0	0	0	0	0	0	0	0	0	0	0	0	0	0	0	0	0	0	0
07:45 AM	0	0	0	0	0	0	0	0	0	0	0	0	0	0	0	0	0	0	0	0	0
Total	0	0	0	0	0	0	0	0	0	0	0	0	0	0	0	0	0	0	0	0	0
08:00 AM	0	0	0	0	0	0	0	0	0	0	0	0	0	0	0	0	0	0	0	0	0
08:15 AM	0	0	0	0	0	0	0	0	0	0	0	0	0	0	0	0	0	0	0	0	0
08:30 AM	0	0	0	0	0	0	0	0	0	0	0	0	0	0	0	0	0	0	0	0	0
08:45 AM	0	0	0	0	0	0	0	0	0	0	0	0	0	0	0	0	0	0	0	0	0
Total	0	0	0	0	0	0	0	0	0	0	0	0	0	0	0	0	0	0	0	0	0
09:00 AM	0	0	0	0	0	0	0	0	0	0	0	0	0	0	0	0	0	0	0	0	0
09:15 AM	0	0	0	0	0	0	0	0	0	0	0	0	0	0	0	0	0	0	0	0	0
09:30 AM	0	0	0	0	0	0	0	0	0	0	0	0	0	0	0	0	0	0	0	0	0
09:45 AM	0	0	0	0	0	0	0	0	0	0	0	0	0	0	0	0	0	0	0	0	0
Total	0	0	0	0	0	0	0	0	0	0	0	0	0	0	0	0	0	0	0	0	0
10:00 AM	0	0	0	0	0	0	0	0	0	0	0	0	0	0	0	0	0	0	0	0	0
10:15 AM	0	0	0	0	0	0	0	0	0	0	0	0	0	0	0	0	0	0	0	0	0
10:30 AM	0	0	0	0	0	0	0	0	0	0	0	0	0	0	0	0	0	0	0	0	0
10:45 AM	0	0	0	0	0	0	0	0	0	0	0	0	0	0	0	0	0	0	0	0	0
Total	0	0	0	0	0	0	0	0	0	0	0	0	0	0	0	0	0	0	0	0	0
11:00 AM	0	0	0	0	0	0	0	0	0	0	0	0	0	0	0	0	0	0	0	0	0
11:15 AM	0	0	0	0	0	0	0	0	0	0	0	0	0	0	0	0	0	0	0	0	0
11:30 AM	0	0	0	0	0	0	0	0	0	0	0	0	0	0	0	0	0	0	0	0	0
11:45 AM	0	0	0	0	0	0	0	0	0	0	0	0	0	0	0	0	0	0	0	0	0
Total	0	0	0	0	0	0	0	0	0	0	0	0	0	0	0	0	0	0	0	0	0
12:00 PM	0	0	0	0	0	0	0	0	0	0	0	0	0	0	0	0	0	0	0	0	0
12:15 PM	0	0	0	0	0	0	0	0	0	0	0	0	0	0	0	0	0	0	0	0	0
12:30 PM	0	0	0	0	0	0	0	0	0	0	0	0	0	0	0	0	0	0	0	0	0
12:45 PM	0	0	0	0	0	0	0	0	0	0	0	0	0	0	0	0	0	0	0	0	0
Total	0	0	0	0	0	0	0	0	0	0	0	0	0	0	0	0	0	0	0	0	0
01:00 PM	0	0	0	0	0	0	0	0	0	0	0	0	0	0	0	0	0	0	0	0	0
01:15 PM	0	0	0	0	0	0	0	0	0	0	0	0	0	0	0	0	0	0	0	0	0
01:30 PM	0	0	0	0	0	0	0	0	0	0	0	0	0	0	0	0	0	0	0	0	0
01:45 PM	0	0	0	0	0	0	0	0	0	0	0	0	0	0	0	0	0	0	0	0	0
Total	0	0	0	0	0	0	0	0	0	0	0	0	0	0	0	0	0	0	0	0	0
02:00 PM	0	0	0	0	0	0	0	0	0	0	0	0	0	0	0	0	0	0	0	0	0
02:15 PM	0	0	0	0	0	0	0	0	0	0	0	0	0	0	0	0	0	0	0	0	0
02:30 PM	0	0	0	0	0	0	0	0	0	0	0	0	0	0	0	0	0	0	0	0	0
02:45 PM	0	0	0	0	0	0	0	0	0	0	0	0	0	0	0	0	0	0	0	0	0
Total	0	0	0	0	0	0	0	0	0	0	0	0	0	0	0	0	0	0	0	0	0
03:00 PM	0	0	0	0	0	0	0	0	0	0	0	0	0	0	0	0	0	0	0	0	0
03:15 PM	0	0	0	0	0	0	0	0	0	0	0	0	0	0	0	0	0	0	0	0	0
03:30 PM	0	0	0	0	0	0	0	0	0	0	0	0	0	0	0	0	0	0	0	0	0

DocuSign Envelope ID: 5C03745C-4B01-4834-A65D-B77F558A4F46

Quality Counts

920 Blairhill Rd, Ste B-106
Charlotte, NC 28217

File Name : 15411715 - Clayton Rd -- Long Shoals Rd
Site Code : 15411715
Start Date : 4/20/2021
Page No : 2

Groups Printed- Classes 11, 12, 13

	Clayton Rd Southbound					Long Shoals Rd Westbound					Northbound					Long Shoals Rd Eastbound					
Start Time	Left	Thru	Right	U-Turn	App. Total	Left	Thru	Right	U-Turn	App. Total	Left	Thru	Right	U-Turn	App. Total	Left	Thru	Right	U-Turn	App. Total	Int. Total
03:45 PM	0	0	0	0	0	0	0	0	0	0	0	0	0	0	0	0	0	0	0	0	0
Total	0	0	0	0	0	0	0	0	0	0	0	0	0	0	0	0	0	0	0	0	0
04:00 PM	0	0	0	0	0	0	0	0	0	0	0	0	0	0	0	0	0	0	0	0	0
04:15 PM	0	0	0	0	0	0	0	0	0	0	0	0	0	0	0	0	0	0	0	0	0
04:30 PM	0	0	0	0	0	0	0	0	0	0	0	0	0	0	0	0	0	0	0	0	0
04:45 PM	0	0	0	0	0	0	0	0	0	0	0	0	0	0	0	0	0	0	0	0	0
Total	0	0	0	0	0	0	0	0	0	0	0	0	0	0	0	0	0	0	0	0	0
05:00 PM	0	0	0	0	0	0	0	0	0	0	0	0	0	0	0	0	0	0	0	0	0
05:15 PM	0	0	0	0	0	0	0	0	0	0	0	0	0	0	0	0	0	0	0	0	0
05:30 PM	0	0	0	0	0	0	0	0	0	0	0	0	0	0	0	0	0	0	0	0	0
05:45 PM	0	0	0	0	0	0	0	0	0	0	0	0	0	0	0	0	0	0	0	0	0
Total	0	0	0	0	0	0	0	0	0	0	0	0	0	0	0	0	0	0	0	0	0
06:00 PM	0	0	0	0	0	0	0	0	0	0	0	0	0	0	0	0	0	0	0	0	0
06:15 PM	0	0	0	0	0	0	0	0	0	0	0	0	0	0	0	0	0	0	0	0	0
06:30 PM	0	0	0	0	0	0	0	0	0	0	0	0	0	0	0	0	0	0	0	0	0
06:45 PM	0	0	0	0	0	0	0	0	0	0	0	0	0	0	0	0	0	0	0	0	0
Total	0	0	0	0	0	0	0	0	0	0	0	0	0	0	0	0	0	0	0	0	0
Grand Total	0	0	0	0	0	0	0	0	0	0	0	0	0	0	0	0	0	0	0	0	0
Apprch %	0	0	0	0		0	0	0	0		0	0	0	0		0	0	0	0		
Total %																					

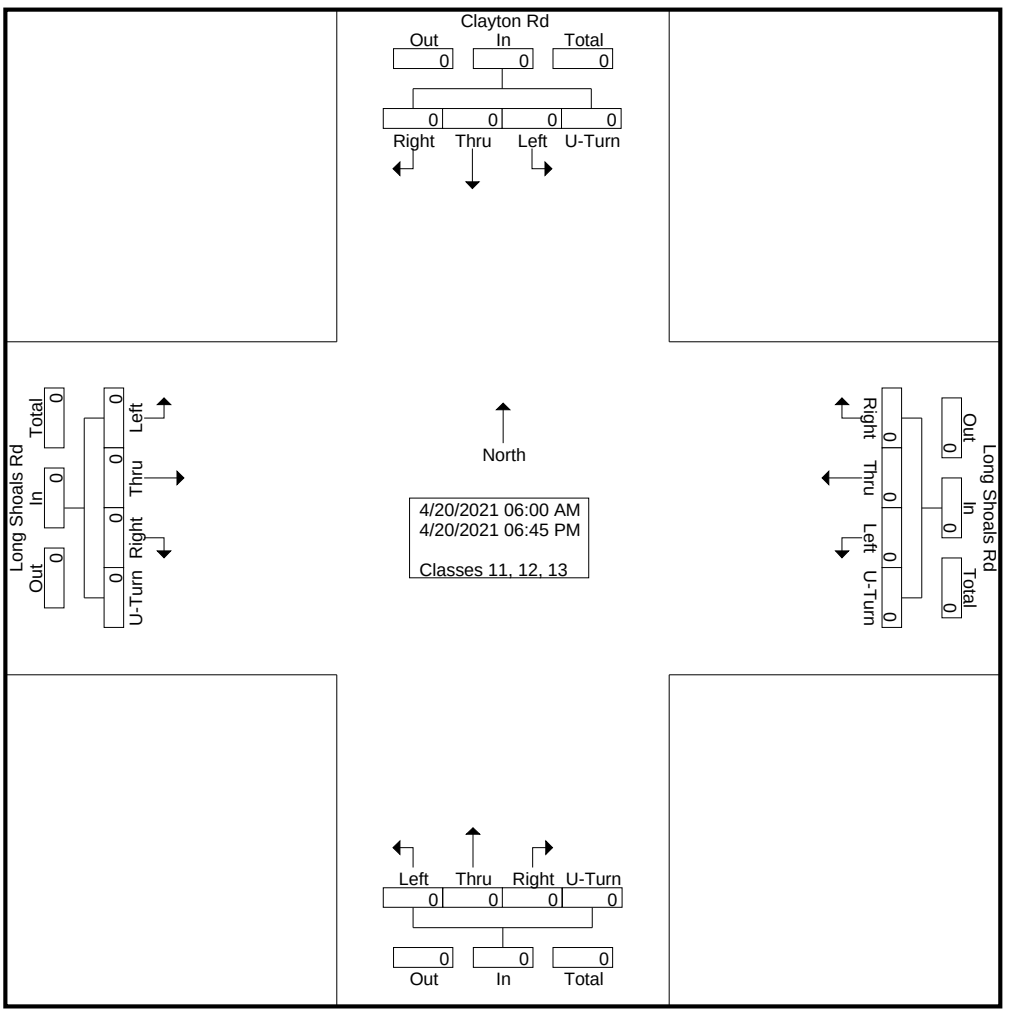

DocuSign Envelope ID: 5C03745C-4B01-4834-A65D-B77F558A4F46

Quality Counts

920 Blairhill Rd, Ste B-106
Charlotte, NC 28217

File Name : 15411715 - Clayton Rd -- Long Shoals Rd
Site Code : 15411715
Start Date : 4/20/2021
Page No : 3

	Clayton Rd Southbound					Long Shoals Rd Westbound					Northbound					Long Shoals Rd Eastbound					
Start Time	Left	Thru	Right	U-Turn	App. Total	Left	Thru	Right	U-Turn	App. Total	Left	Thru	Right	U-Turn	App. Total	Left	Thru	Right	U-Turn	App. Total	Int. Total
Peak Hour Analysis From 06:00 AM to 11:45 AM - Peak 1 of 1																					
Peak Hour for Entire Intersection Begins at 06:00 AM																					
06:00 AM	0	0	0	0	0	0	0	0	0	0	0	0	0	0	0	0	0	0	0	0	0
06:15 AM	0	0	0	0	0	0	0	0	0	0	0	0	0	0	0	0	0	0	0	0	0
06:30 AM	0	0	0	0	0	0	0	0	0	0	0	0	0	0	0	0	0	0	0	0	0
06:45 AM	0	0	0	0	0	0	0	0	0	0	0	0	0	0	0	0	0	0	0	0	0
Total Volume	0	0	0	0	0	0	0	0	0	0	0	0	0	0	0	0	0	0	0	0	0
% App. Total	0	0	0	0		0	0	0	0		0	0	0	0		0	0	0	0		
PHF	.000	.000	.000	.000	.000	.000	.000	.000	.000	.000	.000	.000	.000	.000	.000	.000	.000	.000	.000	.000	.000

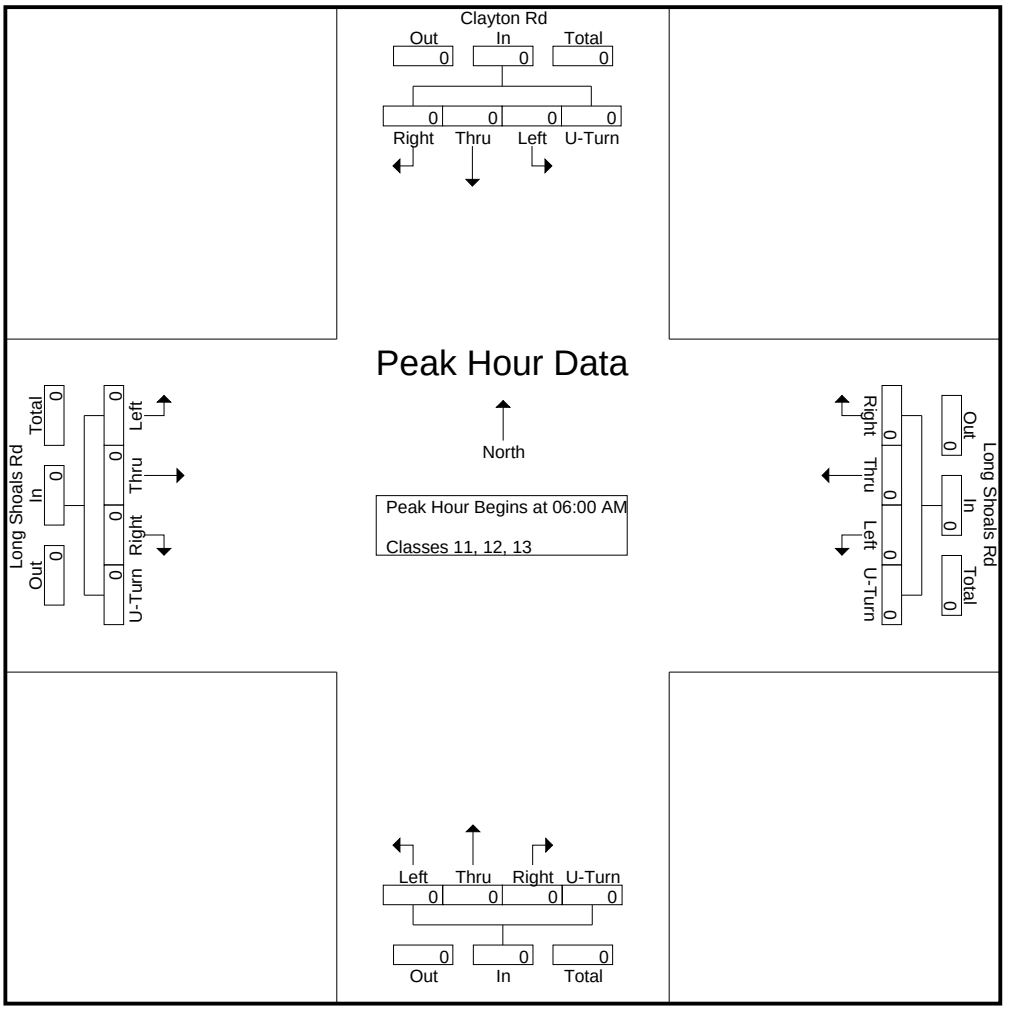

DocuSign Envelope ID: 5C03745C-4B01-4834-A65D-B77F558A4F46

Quality Counts

920 Blairhill Rd, Ste B-106
Charlotte, NC 28217

File Name : 15411715 - Clayton Rd -- Long Shoals Rd
Site Code : 15411715
Start Date : 4/20/2021
Page No : 4

	Clayton Rd Southbound					Long Shoals Rd Westbound					Northbound					Long Shoals Rd Eastbound					
Start Time	Left	Thru	Right	U-Turn	App. Total	Left	Thru	Right	U-Turn	App. Total	Left	Thru	Right	U-Turn	App. Total	Left	Thru	Right	U-Turn	App. Total	Int. Total
Peak Hour Analysis From 12:00 PM to 06:45 PM - Peak 1 of 1																					
Peak Hour for Entire Intersection Begins at 12:00 PM																					
12:00 PM	0	0	0	0	0	0	0	0	0	0	0	0	0	0	0	0	0	0	0	0	0
12:15 PM	0	0	0	0	0	0	0	0	0	0	0	0	0	0	0	0	0	0	0	0	0
12:30 PM	0	0	0	0	0	0	0	0	0	0	0	0	0	0	0	0	0	0	0	0	0
12:45 PM	0	0	0	0	0	0	0	0	0	0	0	0	0	0	0	0	0	0	0	0	0
Total Volume	0	0	0	0	0	0	0	0	0	0	0	0	0	0	0	0	0	0	0	0	0
% App. Total	0	0	0	0		0	0	0	0		0	0	0	0		0	0	0	0		
PHF	.000	.000	.000	.000	.000	.000	.000	.000	.000	.000	.000	.000	.000	.000	.000	.000	.000	.000	.000	.000	.000

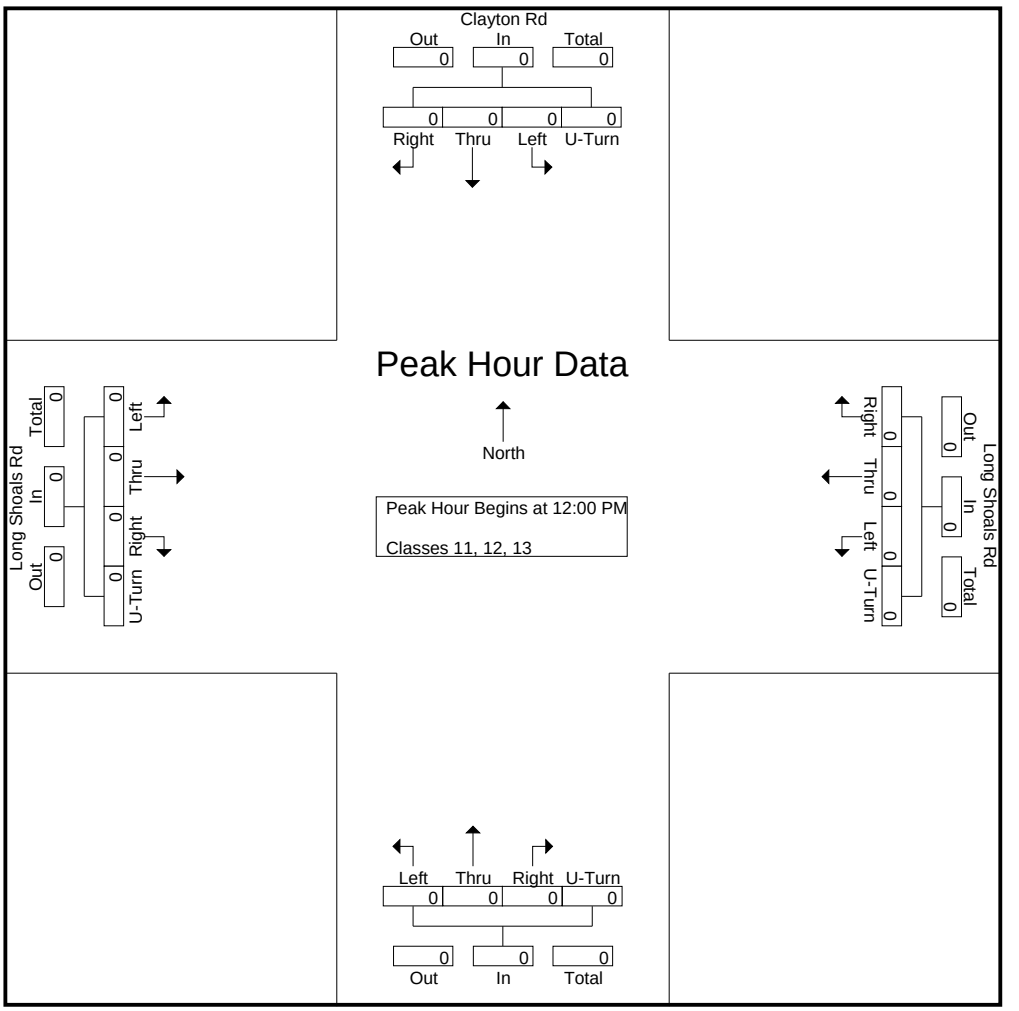

DocuSign Envelope ID: 5C03745C-4B01-4834-A65D-B77F558A4F46

Quality Counts

920 Blairhill Rd, Ste B-106
Charlotte, NC 28217

File Name : 15411715 - Clayton Rd -- Long Shoals Rd
Site Code : 15411715
Start Date : 4/20/2021
Page No : 1

Groups Printed- Bikes, Peds

	Clayton Rd Southbound					Long Shoals Rd Westbound					Northbound					Long Shoals Rd Eastbound					
Start Time	Left	Thru	Right	Peds	App. Total	Left	Thru	Right	Peds	App. Total	Left	Thru	Right	Peds	App. Total	Left	Thru	Right	Peds	App. Total	Int. Total
06:00 AM	0	0	0	0	0	0	0	0	0	0	0	0	0	0	0	0	0	0	0	0	0
06:15 AM	0	0	0	0	0	0	0	0	0	0	0	0	0	0	0	0	0	0	0	0	0
06:30 AM	0	0	0	0	0	0	0	0	0	0	0	0	0	0	0	0	0	0	0	0	0
06:45 AM	0	0	0	0	0	0	0	0	0	0	0	0	0	0	0	0	0	0	0	0	0
Total	0	0	0	0	0	0	0	0	0	0	0	0	0	0	0	0	0	0	0	0	0
07:00 AM	0	0	0	0	0	0	0	0	0	0	0	0	0	0	0	0	0	0	0	0	0
07:15 AM	0	0	0	0	0	0	0	0	0	0	0	0	0	0	0	0	0	0	0	0	0
07:30 AM	0	0	0	0	0	0	0	0	0	0	0	0	0	0	0	0	0	0	0	0	0
07:45 AM	0	0	0	0	0	0	0	0	0	0	0	0	0	0	0	0	0	0	0	0	0
Total	0	0	0	0	0	0	0	0	0	0	0	0	0	0	0	0	0	0	0	0	0
08:00 AM	0	0	0	0	0	0	0	0	0	0	0	0	0	0	0	0	0	0	0	0	0
08:15 AM	0	0	0	0	0	0	0	0	0	0	0	0	0	0	0	0	0	0	0	0	0
08:30 AM	0	0	0	0	0	0	0	0	0	0	0	0	0	0	0	0	0	0	0	0	0
08:45 AM	0	0	0	0	0	0	0	0	0	0	0	0	0	0	0	0	0	0	0	0	0
Total	0	0	0	0	0	0	0	0	0	0	0	0	0	0	0	0	0	0	0	0	0
09:00 AM	0	0	0	0	0	0	0	0	0	0	0	0	0	0	0	0	0	0	0	0	0
09:15 AM	0	0	0	0	0	0	0	0	0	0	0	0	0	0	0	0	0	0	0	0	0
09:30 AM	0	0	0	0	0	0	0	0	0	0	0	0	0	0	0	0	0	0	0	0	0
09:45 AM	0	0	0	0	0	0	0	0	0	0	0	0	0	0	0	0	0	0	0	0	0
Total	0	0	0	0	0	0	0	0	0	0	0	0	0	0	0	0	0	0	0	0	0
10:00 AM	0	0	0	0	0	0	0	0	0	0	0	0	0	0	0	0	0	0	0	0	0
10:15 AM	0	0	0	0	0	0	0	0	0	0	0	0	0	0	0	0	0	0	0	0	0
10:30 AM	2	0	0	0	2	0	0	0	0	0	0	0	0	0	0	0	0	0	0	0	2
10:45 AM	0	0	0	0	0	0	0	0	0	0	0	0	0	0	0	0	0	0	0	0	0
Total	2	0	0	0	2	0	0	0	0	0	0	0	0	0	0	0	0	0	0	0	2
11:00 AM	0	0	0	0	0	0	0	0	0	0	0	0	0	0	0	0	0	0	0	0	0
11:15 AM	0	0	0	0	0	0	0	0	0	0	0	0	0	0	0	0	0	0	0	0	0
11:30 AM	0	0	0	0	0	0	0	0	0	0	0	0	0	0	0	0	0	0	0	0	0
11:45 AM	0	0	0	0	0	0	0	0	0	0	0	0	0	0	0	0	0	0	0	0	0
Total	0	0	0	0	0	0	0	0	0	0	0	0	0	0	0	0	0	0	0	0	0
12:00 PM	0	0	0	0	0	0	0	0	0	0	0	0	0	0	0	0	0	0	0	0	0
12:15 PM	0	0	0	0	0	0	0	0	0	0	0	0	0	0	0	0	0	0	0	0	0
12:30 PM	0	0	0	0	0	0	0	0	0	0	0	0	0	0	0	0	0	0	0	0	0
12:45 PM	0	0	0	0	0	0	0	0	0	0	0	0	0	0	0	0	0	0	0	0	0
Total	0	0	0	0	0	0	0	0	0	0	0	0	0	0	0	0	0	0	0	0	0
01:00 PM	0	0	0	0	0	0	0	0	0	0	0	0	0	0	0	0	0	0	0	0	0
01:15 PM	0	0	0	0	0	0	0	0	0	0	0	0	0	0	0	0	0	0	0	0	0
01:30 PM	0	0	0	0	0	0	0	0	0	0	0	0	0	0	0	0	0	0	0	0	0
01:45 PM	0	0	0	0	0	0	0	0	0	0	0	0	0	0	0	0	0	0	0	0	0
Total	0	0	0	0	0	0	0	0	0	0	0	0	0	0	0	0	0	0	0	0	0
02:00 PM	0	0	0	0	0	0	0	0	0	0	0	0	0	0	0	0	0	0	0	0	0
02:15 PM	0	0	0	0	0	0	0	0	0	0	0	0	0	0	0	0	0	0	0	0	0
02:30 PM	0	0	0	0	0	0	0	0	0	0	0	0	0	0	0	0	0	0	0	0	0
02:45 PM	0	0	0	0	0	0	0	0	0	0	0	0	0	0	0	0	0	0	0	0	0
Total	0	0	0	0	0	0	0	0	0	0	0	0	0	0	0	0	0	0	0	0	0
03:00 PM	0	0	0	0	0	0	0	0	0	0	0	0	0	0	0	0	0	0	0	0	0
03:15 PM	0	0	0	0	0	0	0	0	0	0	0	0	0	0	0	0	0	0	0	0	0
03:30 PM	0	0	0	0	0	0	0	0	0	0	0	0	0	0	0	0	0	0	0	0	0

DocuSign Envelope ID: 5C03745C-4B01-4834-A65D-B77F558A4F46

Quality Counts

920 Blairhill Rd, Ste B-106
Charlotte, NC 28217

File Name : 15411715 - Clayton Rd -- Long Shoals Rd
Site Code : 15411715
Start Date : 4/20/2021

Groups Printed- Bikes, Peds

	Clayton Rd Southbound					Long Shoals Rd Westbound					Northbound					Long Shoals Rd Eastbound					
Start Time	Left	Thru	Right	Peds	App. Total	Left	Thru	Right	Peds	App. Total	Left	Thru	Right	Peds	App. Total	Left	Thru	Right	Peds	App. Total	Int. Total
03:45 PM	0	0	0	0	0	0	0	0	0	0	0	0	0	0	0	0	0	0	0	0	0
Total	0	0	0	0	0	0	0	0	0	0	0	0	0	0	0	0	0	0	0	0	0
04:00 PM	0	0	0	0	0	0	0	0	0	0	0	0	0	0	0	0	0	0	0	0	0
04:15 PM	0	0	0	0	0	0	0	0	0	0	0	0	0	0	0	0	0	0	0	0	0
04:30 PM	0	0	0	1	1	0	0	0	0	0	0	0	0	0	0	0	0	0	0	0	1
04:45 PM	0	0	0	0	0	0	0	0	0	0	0	0	0	0	0	0	0	0	0	0	0
Total	0	0	0	1	1	0	0	0	0	0	0	0	0	0	0	0	0	0	0	0	1
05:00 PM	0	0	0	0	0	0	0	0	0	0	0	0	0	0	0	0	0	0	0	0	0
05:15 PM	0	0	0	0	0	0	0	0	0	0	0	0	0	0	0	0	0	0	0	0	0
05:30 PM	0	0	0	0	0	0	0	0	0	0	0	0	0	0	0	0	0	0	0	0	0
05:45 PM	0	0	0	0	0	0	0	0	0	0	0	0	0	0	0	0	0	0	0	0	0
Total	0	0	0	0	0	0	0	0	0	0	0	0	0	0	0	0	0	0	0	0	0
06:00 PM	0	0	0	0	0	0	0	0	0	0	0	0	0	0	0	0	0	0	0	0	0
06:15 PM	0	0	0	0	0	0	0	0	0	0	0	0	0	0	0	0	0	0	0	0	0
06:30 PM	0	0	0	0	0	0	0	0	0	0	0	0	0	0	0	0	0	0	0	0	0
06:45 PM	0	0	0	0	0	0	0	0	0	0	0	0	0	0	0	0	0	0	0	0	0
Total	0	0	0	0	0	0	0	0	0	0	0	0	0	0	0	0	0	0	0	0	0
Grand Total	2	0	0	1	3	0	0	0	0	0	0	0	0	0	0	0	0	0	0	0	3
Apprch %	66.7	0	0	33.3		0	0	0	0		0	0	0	0		0	0	0	0		
Total %	66.7	0	0	33.3	100	0	0	0	0	0	0	0	0	0	0	0	0	0	0	0	

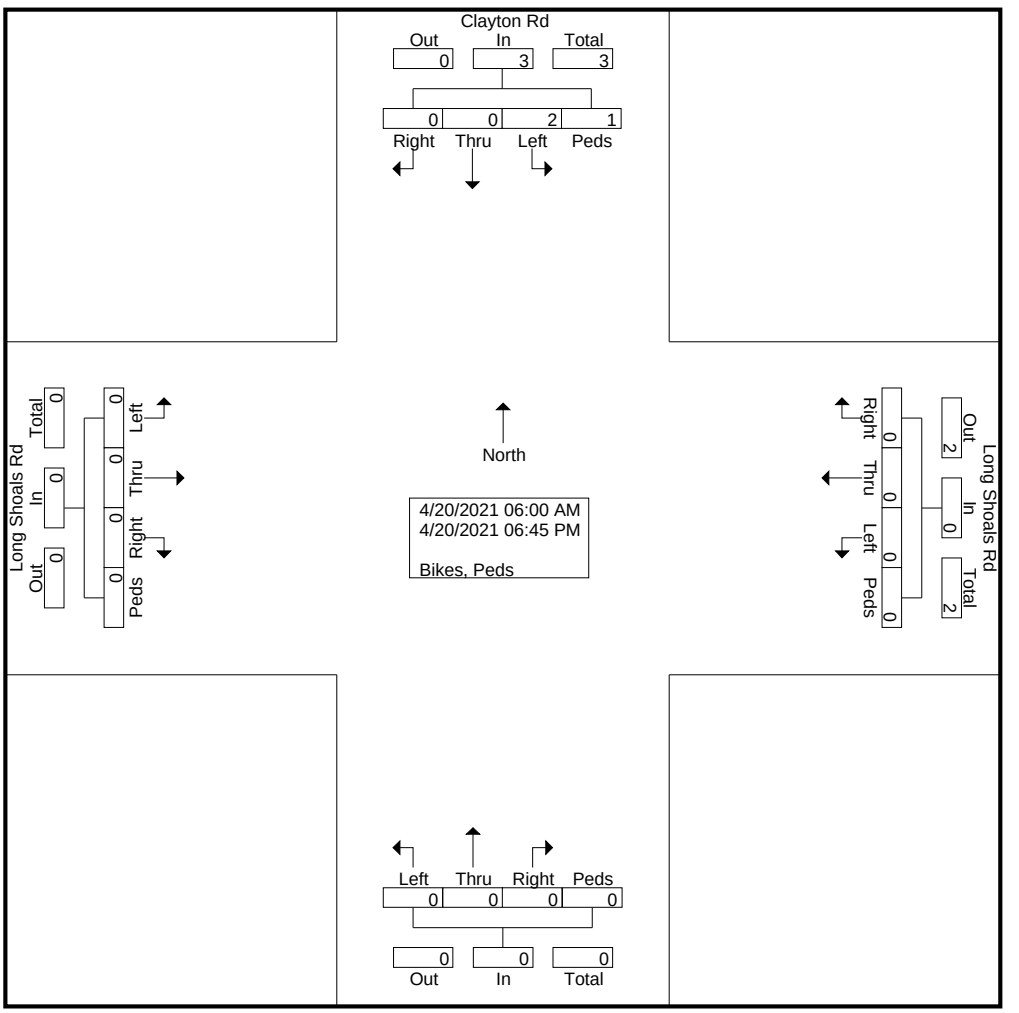

DocuSign Envelope ID: 5C03745C-4B01-4834-A65D-B77F558A4F46

Quality Counts

920 Blairhill Rd, Ste B-106
Charlotte, NC 28217

File Name : 15411715 - Clayton Rd -- Long Shoals Rd
Site Code : 15411715
Start Date : 4/20/2021
Page No : 3

	Clayton Rd Southbound					Long Shoals Rd Westbound					Northbound					Long Shoals Rd Eastbound					
Start Time	Left	Thru	Right	Peds	App. Total	Left	Thru	Right	Peds	App. Total	Left	Thru	Right	Peds	App. Total	Left	Thru	Right	Peds	App. Total	Int. Total
Peak Hour Analysis From 06:00 AM to 11:45 AM - Peak 1 of 1																					
Peak Hour for Entire Intersection Begins at 09:45 AM																					
09:45 AM	0	0	0	0	0	0	0	0	0	0	0	0	0	0	0	0	0	0	0	0	0
10:00 AM	0	0	0	0	0	0	0	0	0	0	0	0	0	0	0	0	0	0	0	0	0
10:15 AM	0	0	0	0	0	0	0	0	0	0	0	0	0	0	0	0	0	0	0	0	0
10:30 AM	**2**	0	0	0	**2**	0	0	0	0	0	0	0	0	0	0	0	0	0	0	0	**2**
Total Volume	2	0	0	0	2	0	0	0	0	0	0	0	0	0	0	0	0	0	0	0	2
% App. Total	100	0	0	0		0	0	0	0		0	0	0	0		0	0	0	0		
PHF	.250	.000	.000	.000	.250	.000	.000	.000	.000	.000	.000	.000	.000	.000	.000	.000	.000	.000	.000	.000	.250

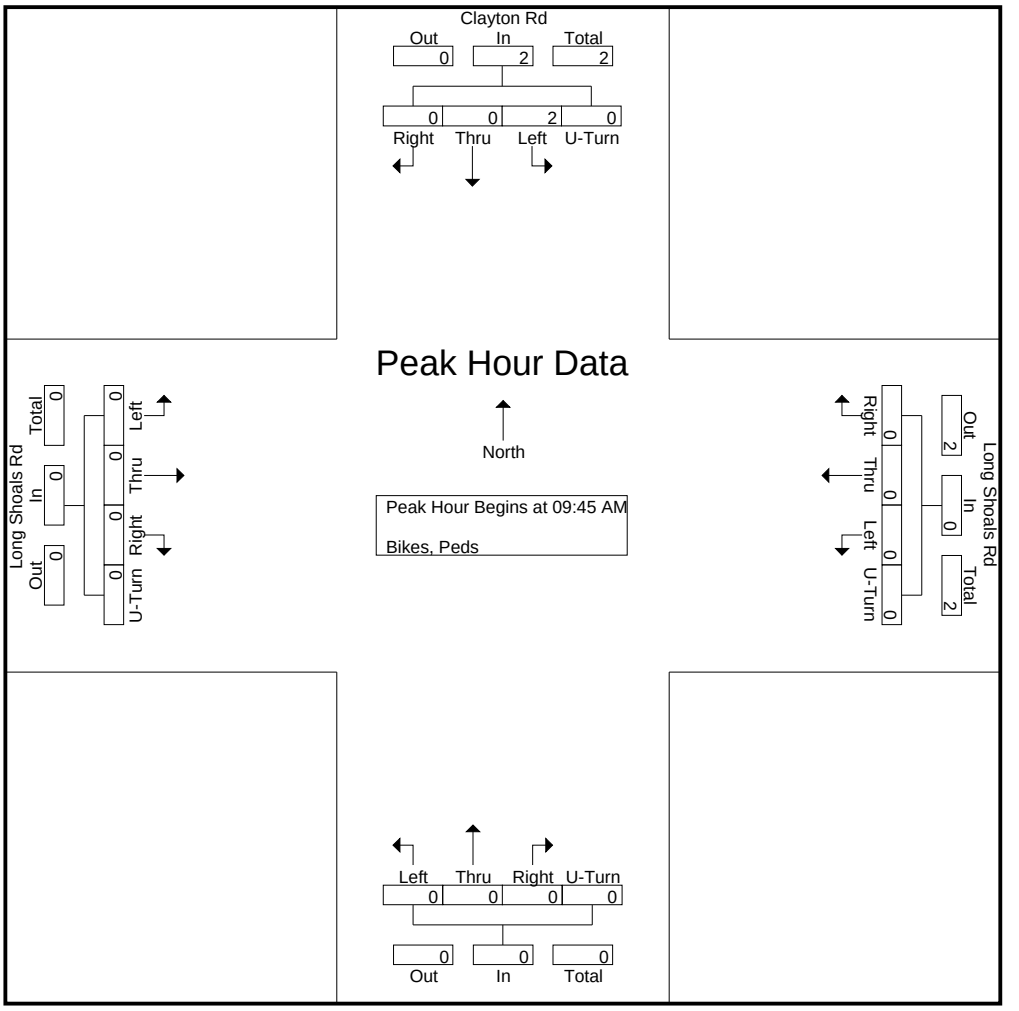

DocuSign Envelope ID: 5C03745C-4B01-4834-A65D-B77F558A4F46

Quality Counts

920 Blairhill Rd, Ste B-106
Charlotte, NC 28217

File Name : 15411715 - Clayton Rd -- Long Shoals Rd
Site Code : 15411715
Start Date : 4/20/2021
Page No : 4

	Clayton Rd Southbound					Long Shoals Rd Westbound					Northbound					Long Shoals Rd Eastbound					
Start Time	Left	Thru	Right	Peds	App. Total	Left	Thru	Right	Peds	App. Total	Left	Thru	Right	Peds	App. Total	Left	Thru	Right	Peds	App. Total	Int. Total
Peak Hour Analysis From 12:00 PM to 06:45 PM - Peak 1 of 1																					
Peak Hour for Entire Intersection Begins at 03:45 PM																					
03:45 PM	0	0	0	0	0	0	0	0	0	0	0	0	0	0	0	0	0	0	0	0	0
04:00 PM	0	0	0	0	0	0	0	0	0	0	0	0	0	0	0	0	0	0	0	0	0
04:15 PM	0	0	0	0	0	0	0	0	0	0	0	0	0	0	0	0	0	0	0	0	0
04:30 PM	0	0	0	**1**	**1**	0	0	0	0	0	0	0	0	0	0	0	0	0	0	0	**1**
Total Volume	0	0	0	1	1	0	0	0	0	0	0	0	0	0	0	0	0	0	0	0	1
% App. Total	0	0	0	100		0	0	0	0		0	0	0	0		0	0	0	0		
PHF	.000	.000	.000	.250	.250	.000	.000	.000	.000	.000	.000	.000	.000	.000	.000	.000	.000	.000	.000	.000	.250

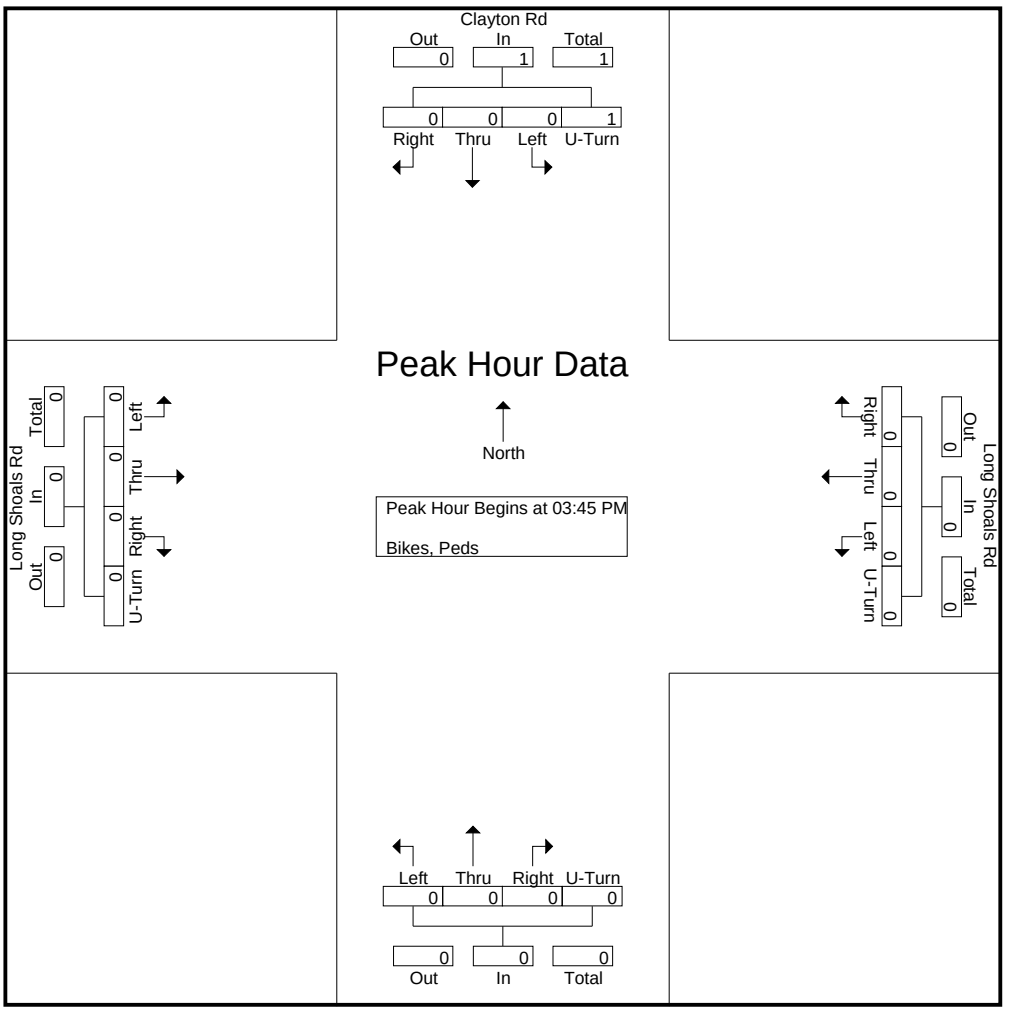

DocuSign Envelope ID: 5C03745C-4B01-4834-A65D-B77F558A4F46

QUALITY COUNTS LLC
920 Blairhill Rd, Suite 106, Charlotte, NC 28217
704.215.4616

Count Number: 15411716
County: Buncombe
City: Arden
Division: 13

Location: Ledbetter Rd & Long Shoals Rd
General Location Type: Intersection
Count Type: Turning Movement (Classification)
Count Start Date: 4/20/2021
Time: 6:00 AM – 7:00 PM
Volume: 21,459

Maximum Temperature: 69° F
Minimum Temperature: 40° F
Precipitation: 0.00 in
Snowfall: 0.0 in
Average Sky Cover: 0.2
Weather Conditions: Clear

1. **School in Session:** Yes
2. **Pedestrians Counted**: Yes
3. **Disabled Pedestrians Present**: No
   Description and Approaches Used: N/A
4. **Counted By**: Day'Are Anderson
5. **Data Processor**: Jon B
6. **Signal Inventory**: N/A
7. **Data Collection Method**: Video/Count Board
8. **Equipment Operating Properly**: Yes
9. **Area Lighting Present**: No
10. **Nearest Roadway Stop Sign < 300 ft:** No
    If yes, list approaches: N/A
11. **Nearest Traffic Signal < 300 ft:** No
    If yes, list approaches: N/A
12. **At-Grade Railroad Crossing Present (<200 ft):** No
    If yes, list approaches & distance: N/A
13. **Other:**

↑ North



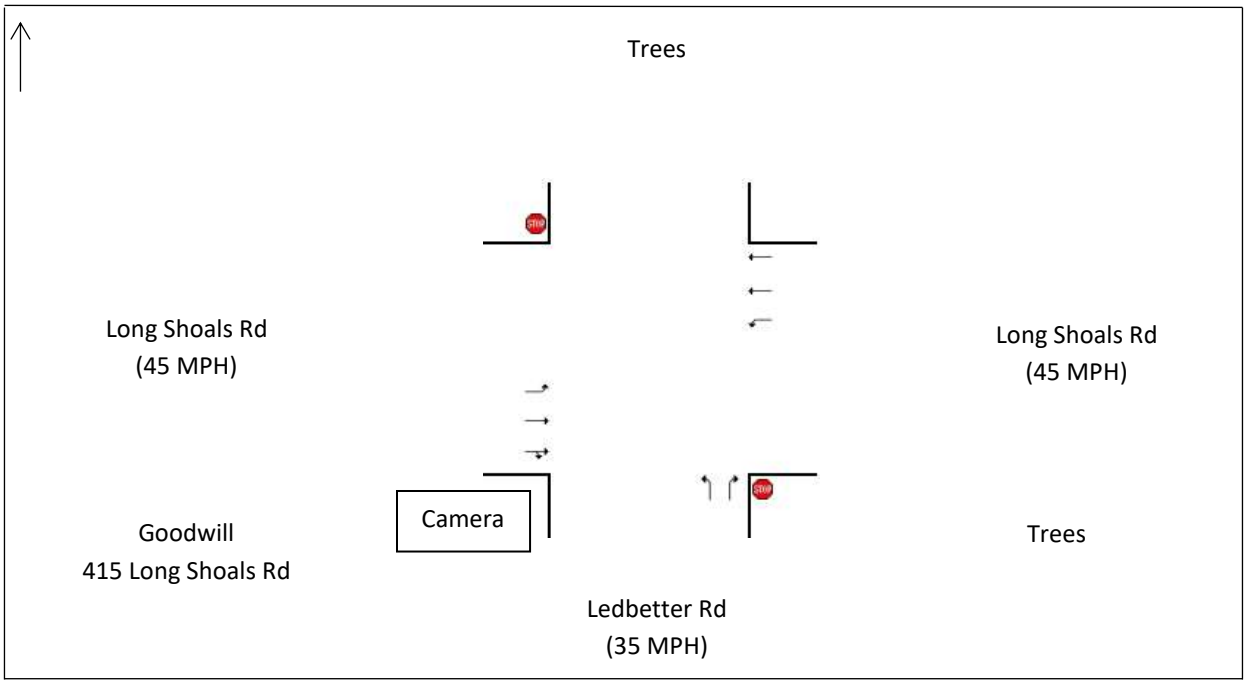

DocuSign Envelope ID: 5C03745C-4B01-4834-A65D-B77F558A4F46

Quality Counts

920 Blairhill Rd, Ste B-106
Charlotte, NC 28217

File Name : 15411716 - Ledbetter Rd -- Long Shoals Rd
Site Code : 15411716
Start Date : 4/20/2021
Page No : 1

Groups Printed- Classes 1, 2, 3 - Classes 4, 5, 6, 7 - Classes 8, 9, 10 - Classes 11, 12, 13

	Southbound					Long Shoals Rd Westbound					Ledbetter Rd Northbound					Long Shoals Rd Eastbound					
Start Time	Left	Thru	Right	U-Turn	App. Total	Left	Thru	Right	U-Turn	App. Total	Left	Thru	Right	U-Turn	App. Total	Left	Thru	Right	U-Turn	App. Total	Int. Total
06:00 AM	0	0	0	0	0	6	31	0	0	37	0	0	11	0	11	0	72	0	0	72	120
06:15 AM	0	0	0	0	0	11	56	0	0	67	0	0	23	0	23	0	71	0	0	71	161
06:30 AM	0	0	0	0	0	8	92	0	0	100	0	0	24	0	24	0	89	2	0	91	215
06:45 AM	0	0	0	0	0	16	129	0	2	147	2	0	29	0	31	0	99	2	0	101	279
Total	0	0	0	0	0	41	308	0	2	351	2	0	87	0	89	0	331	4	0	335	775
07:00 AM	0	0	0	0	0	12	105	0	1	118	1	0	61	0	62	0	134	2	0	136	316
07:15 AM	0	0	0	0	0	23	182	0	0	205	2	0	90	0	92	0	202	2	0	204	501
07:30 AM	0	0	0	0	0	30	226	0	1	257	6	0	75	0	81	0	239	4	0	243	581
07:45 AM	0	0	0	0	0	41	219	0	0	260	7	0	77	0	84	0	247	3	1	251	595
Total	0	0	0	0	0	106	732	0	2	840	16	0	303	0	319	0	822	11	1	834	1993
08:00 AM	0	0	0	0	0	31	197	0	1	229	3	0	61	0	64	0	205	3	1	209	502
08:15 AM	0	0	0	0	0	27	162	0	0	189	1	0	58	0	59	0	191	2	1	194	442
08:30 AM	0	0	0	0	0	19	139	0	1	159	1	0	24	0	25	0	189	5	0	194	378
08:45 AM	0	0	0	0	0	30	160	0	0	190	1	0	38	0	39	0	193	4	4	201	430
Total	0	0	0	0	0	107	658	0	2	767	6	0	181	0	187	0	778	14	6	798	1752
09:00 AM	0	0	0	0	0	23	125	0	1	149	0	0	35	0	35	0	137	2	3	142	326
09:15 AM	0	0	0	0	0	24	124	0	3	151	2	0	31	0	33	0	153	2	3	158	342
09:30 AM	0	0	0	0	0	14	118	0	3	135	2	0	50	0	52	0	166	1	1	168	355
09:45 AM	0	0	0	0	0	26	122	0	3	151	1	0	37	0	38	0	142	1	0	143	332
Total	0	0	0	0	0	87	489	0	10	586	5	0	153	0	158	0	598	6	7	611	1355
10:00 AM	0	0	0	0	0	29	123	0	0	152	3	0	33	0	36	0	120	2	1	123	311
10:15 AM	0	0	0	0	0	33	104	0	1	138	5	0	29	0	34	0	130	2	0	132	304
10:30 AM	0	0	0	0	0	27	128	0	3	158	2	0	30	0	32	0	139	2	0	141	331
10:45 AM	0	0	0	0	0	20	137	0	1	158	1	0	21	0	22	0	144	4	0	148	328
Total	0	0	0	0	0	109	492	0	5	606	11	0	113	0	124	0	533	10	1	544	1274
11:00 AM	0	0	0	0	0	20	137	0	1	158	1	0	32	0	33	0	113	1	0	114	305
11:15 AM	0	0	0	0	0	32	145	0	1	178	2	0	27	1	30	0	167	2	0	169	377
11:30 AM	0	0	0	0	0	33	150	0	0	183	4	0	31	0	35	0	197	1	0	198	416
11:45 AM	0	0	0	0	0	28	148	0	5	181	2	0	30	0	32	0	159	2	0	161	374
Total	0	0	0	0	0	113	580	0	7	700	9	0	120	1	130	0	636	6	0	642	1472
12:00 PM	0	0	0	0	0	34	167	0	1	202	3	0	28	1	32	0	207	3	0	210	444
12:15 PM	0	0	0	0	0	25	171	0	1	197	0	0	30	0	30	0	184	1	1	186	413
12:30 PM	0	0	0	0	0	42	174	0	2	218	4	0	28	0	32	0	175	9	0	184	434
12:45 PM	0	0	0	0	0	42	187	0	2	231	5	0	31	0	36	0	170	4	1	175	442
Total	0	0	0	0	0	143	699	0	6	848	12	0	117	1	130	0	736	17	2	755	1733
01:00 PM	0	0	0	0	0	31	180	0	2	213	3	0	31	0	34	0	160	2	2	164	411
01:15 PM	0	0	0	0	0	38	184	0	1	223	5	0	26	0	31	0	181	5	0	186	440
01:30 PM	0	0	0	0	0	35	176	0	1	212	3	0	33	0	36	0	151	3	1	155	403
01:45 PM	0	0	0	0	0	42	179	0	5	226	2	0	42	0	44	0	167	2	1	170	440
Total	0	0	0	0	0	146	719	0	9	874	13	0	132	0	145	0	659	12	4	675	1694
02:00 PM	0	0	0	0	0	30	166	0	0	196	4	0	31	1	36	0	162	5	0	167	399
02:15 PM	0	0	0	0	0	28	180	0	1	209	3	0	24	0	27	0	174	2	0	176	412
02:30 PM	0	0	0	0	0	34	185	0	3	222	7	0	45	0	52	0	217	3	0	220	494
02:45 PM	0	0	0	0	0	44	160	0	3	207	0	0	46	0	46	0	188	12	1	201	454
Total	0	0	0	0	0	136	691	0	7	834	14	0	146	1	161	0	741	22	1	764	1759
03:00 PM	0	0	0	0	0	55	182	0	2	239	1	0	42	0	43	0	212	4	1	217	499
03:15 PM	0	0	0	0	0	51	200	0	1	252	2	0	34	0	36	0	189	5	0	194	482
03:30 PM	0	0	0	0	0	55	162	0	1	218	3	0	39	0	42	0	204	4	0	208	468

DocuSign Envelope ID: 5C03745C-4B01-4834-A65D-B77F558A4F46

Quality Counts

920 Blairhill Rd, Ste B-106
Charlotte, NC 28217

File Name : 15411716 - Ledbetter Rd -- Long Shoals Rd
Site Code : 15411716
Start Date : 4/20/2021

Groups Printed- Classes 1, 2, 3 - Classes 4, 5, 6, 7 - Classes 8, 9, 10 - Classes 11, 12, 13

	Southbound					Long Shoals Rd Westbound					Ledbetter Rd Northbound					Long Shoals Rd Eastbound					
Start Time	Left	Thru	Right	U-Turn	App. Total	Left	Thru	Right	U-Turn	App. Total	Left	Thru	Right	U-Turn	App. Total	Left	Thru	Right	U-Turn	App. Total	Int. Total
03:45 PM	0	0	0	0	0	58	216	0	1	275	4	0	36	0	40	0	214	5	1	220	535
Total	0	0	0	0	0	219	760	0	5	984	10	0	151	0	161	0	819	18	2	839	1984
04:00 PM	0	0	0	0	0	54	181	0	1	236	4	0	32	0	36	0	184	5	0	189	461
04:15 PM	0	0	0	0	0	64	229	0	0	293	8	0	33	0	41	0	208	5	2	215	549
04:30 PM	0	0	0	0	0	72	196	0	1	269	0	0	29	0	29	0	186	3	1	190	488
04:45 PM	0	0	0	0	0	81	188	0	2	271	5	0	43	0	48	0	196	6	0	202	521
Total	0	0	0	0	0	271	794	0	4	1069	17	0	137	0	154	0	774	19	3	796	2019
05:00 PM	0	0	0	0	0	65	196	0	2	263	4	0	39	0	43	0	221	5	0	226	532
05:15 PM	0	0	0	0	0	76	210	0	1	287	4	0	50	0	54	0	204	7	2	213	554
05:30 PM	0	0	0	0	0	68	213	0	1	282	3	0	40	0	43	0	170	6	1	177	502
05:45 PM	0	0	0	0	0	50	212	0	2	264	3	0	37	0	40	0	194	5	0	199	503
Total	0	0	0	0	0	259	831	0	6	1096	14	0	166	0	180	0	789	23	3	815	2091
06:00 PM	0	0	0	0	0	60	191	0	2	253	5	0	38	0	43	0	157	4	0	161	457
06:15 PM	0	0	0	0	0	48	184	0	1	233	6	0	29	0	35	0	127	5	0	132	400
06:30 PM	0	0	0	0	0	59	146	0	0	205	3	0	34	0	37	0	121	0	0	121	363
06:45 PM	0	0	0	0	0	30	142	0	2	174	5	0	31	0	36	0	121	7	0	128	338
Total	0	0	0	0	0	197	663	0	5	865	19	0	132	0	151	0	526	16	0	542	1558
Grand Total	0	0	0	0	0	1934	8416	0	70	10420	148	0	1938	3	2089	0	8742	178	30	8950	21459
Apprch %	0	0	0	0		18.6	80.8	0	0.7		7.1	0	92.8	0.1		0	97.7	2	0.3		
Total %	0	0	0	0	0	9	39.2	0	0.3	48.6	0.7	0	9	0	9.7	0	40.7	0.8	0.1	41.7	
Classes 1, 2, 3	0	0	0	0	0	1872	7691	0	69	9632	141	0	1920	3	2064	0	8110	163	25	8298	19994
% Classes 1, 2, 3	0	0	0	0	0	96.8	91.4	0	98.6	92.4	95.3	0	99.1	100	98.8	0	92.8	91.6	83.3	92.7	93.2
Classes 4, 5, 6, 7	0	0	0	0	0	58	568	0	1	627	7	0	18	0	25	0	485	14	5	504	1156
% Classes 4, 5, 6, 7	0	0	0	0	0	3	6.7	0	1.4	6	4.7	0	0.9	0	1.2	0	5.5	7.9	16.7	5.6	5.4
Classes 8, 9, 10	0	0	0	0	0	4	157	0	0	161	0	0	0	0	0	0	147	1	0	148	309
% Classes 8, 9, 10	0	0	0	0	0	0.2	1.9	0	0	1.5	0	0	0	0	0	0	1.7	0.6	0	1.7	1.4
Classes 11, 12, 13	0	0	0	0	0	0	0	0	0	0	0	0	0	0	0	0	0	0	0	0	0
% Classes 11, 12, 13	0	0	0	0	0	0	0	0	0	0	0	0	0	0	0	0	0	0	0	0	0

DocuSign Envelope ID: 5C03745C-4B01-4834-A65D-B77F558A4F46

Quality Counts

920 Blairhill Rd, Ste B-106
Charlotte, NC 28217

File Name : 15411716 - Ledbetter Rd -- Long Shoals Rd
Site Code : 15411716
Start Date : 4/20/2021
Page No : 3

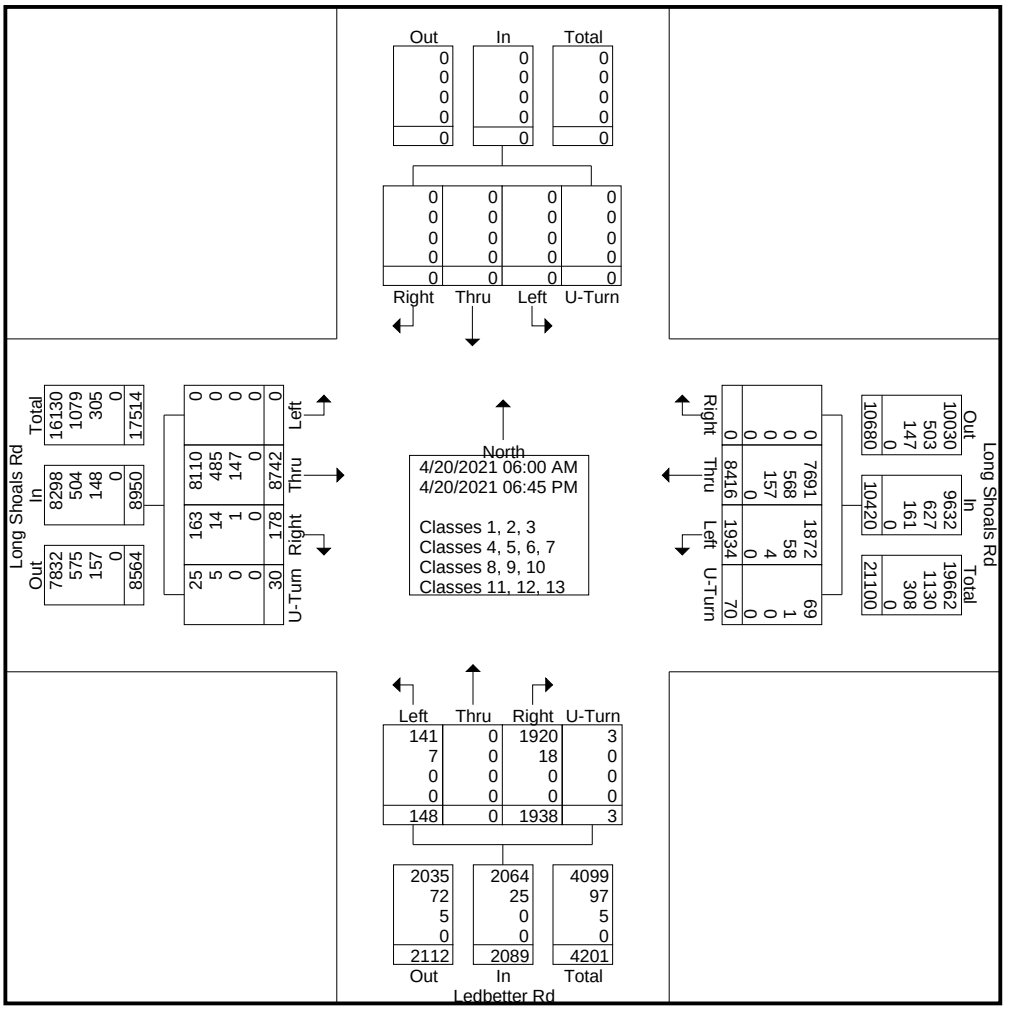

DocuSign Envelope ID: 5C03745C-4B01-4834-A65D-B77F558A4F46

Quality Counts

920 Blairhill Rd, Ste B-106
Charlotte, NC 28217

File Name : 15411716 - Ledbetter Rd -- Long Shoals Rd
Site Code : 15411716
Start Date : 4/20/2021
Page No : 4

	Southbound					Long Shoals Rd Westbound					Ledbetter Rd Northbound					Long Shoals Rd Eastbound					
Start Time	Left	Thru	Right	U-Turn	App. Total	Left	Thru	Right	U-Turn	App. Total	Left	Thru	Right	U-Turn	App. Total	Left	Thru	Right	U-Turn	App. Total	Int. Total
Peak Hour Analysis From 06:00 AM to 11:45 AM - Peak 1 of 1																					
Peak Hour for Entire Intersection Begins at 07:15 AM																					
07:15 AM	0	0	0	0	0	23	182	0	0	205	2	0	**90**	0	**92**	0	202	2	0	204	501
07:30 AM	0	0	0	0	0	30	**226**	0	**1**	257	6	0	75	0	81	0	239	**4**	0	243	581
07:45 AM	0	0	0	0	0	**41**	219	0	0	**260**	**7**	0	77	0	84	0	**247**	3	**1**	**251**	**595**
08:00 AM	0	0	0	0	0	31	197	0	1	229	3	0	61	0	64	0	205	3	1	209	502
Total Volume	0	0	0	0	0	125	824	0	2	951	18	0	303	0	321	0	893	12	2	907	2179
% App. Total	0	0	0	0		13.1	86.6	0	0.2		5.6	0	94.4	0		0	98.5	1.3	0.2		
PHF	.000	.000	.000	.000	.000	.762	.912	.000	.500	.914	.643	.000	.842	.000	.872	.000	.904	.750	.500	.903	.916

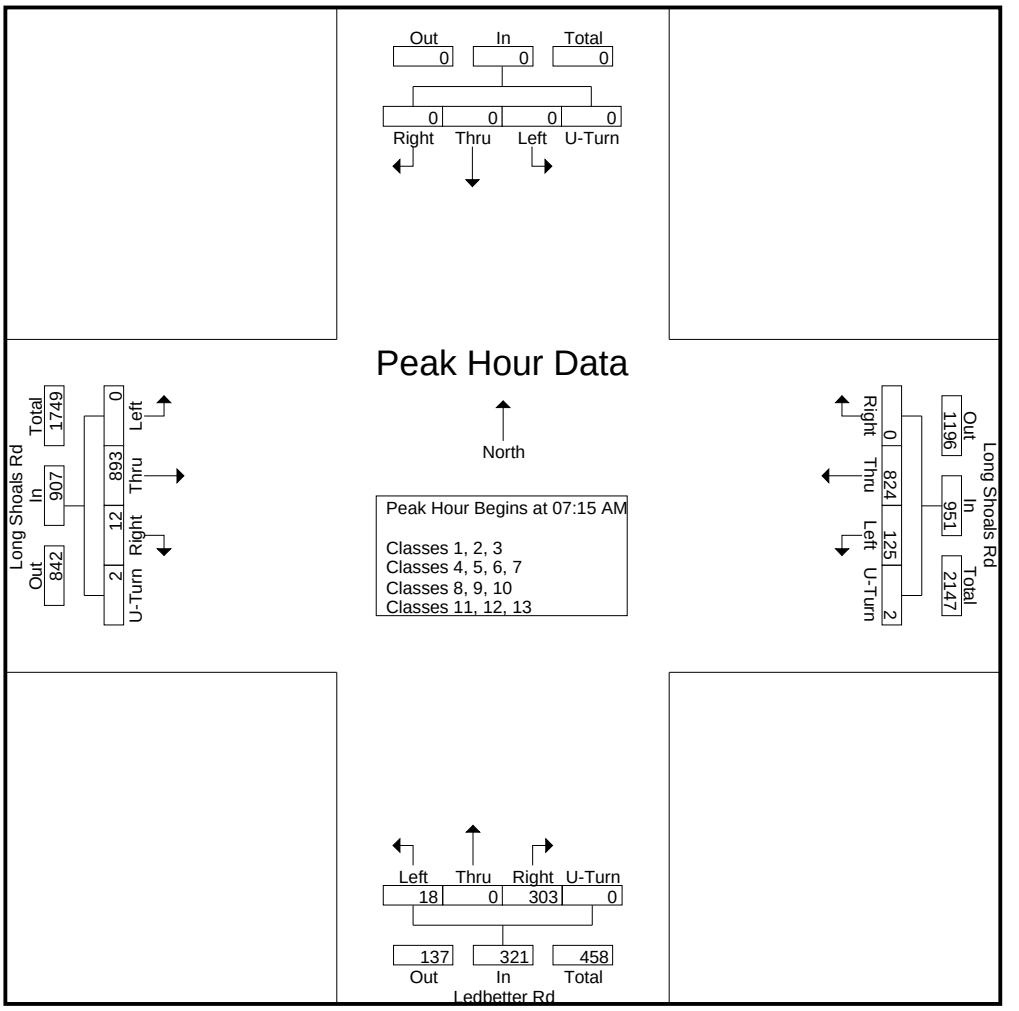

DocuSign Envelope ID: 5C03745C-4B01-4834-A65D-B77F558A4F46

Quality Counts

920 Blairhill Rd, Ste B-106
Charlotte, NC 28217

File Name : 15411716 - Ledbetter Rd -- Long Shoals Rd
Site Code : 15411716
Start Date : 4/20/2021
Page No : 5

	Southbound					Long Shoals Rd Westbound					Ledbetter Rd Northbound					Long Shoals Rd Eastbound					
Start Time	Left	Thru	Right	U-Turn	App. Total	Left	Thru	Right	U-Turn	App. Total	Left	Thru	Right	U-Turn	App. Total	Left	Thru	Right	U-Turn	App. Total	Int. Total
Peak Hour Analysis From 12:00 PM to 06:45 PM - Peak 1 of 1																					
Peak Hour for Entire Intersection Begins at 04:45 PM																					
04:45 PM	0	0	0	0	0	**81**	188	0	**2**	271	**5**	0	43	0	48	0	196	6	0	202	521
05:00 PM	0	0	0	0	0	65	196	0	2	263	4	0	39	0	43	0	**221**	5	0	**226**	532
05:15 PM	0	0	0	0	0	76	210	0	1	**287**	4	0	**50**	0	**54**	0	204	**7**	**2**	213	**554**
05:30 PM	0	0	0	0	0	68	**213**	0	1	282	3	0	40	0	43	0	170	6	1	177	502
Total Volume	0	0	0	0	0	290	807	0	6	1103	16	0	172	0	188	0	791	24	3	818	2109
% App. Total	0	0	0	0		26.3	73.2	0	0.5		8.5	0	91.5	0		0	96.7	2.9	0.4		
PHF	.000	.000	.000	.000	.000	.895	.947	.000	.750	.961	.800	.000	.860	.000	.870	.000	.895	.857	.375	.905	.952

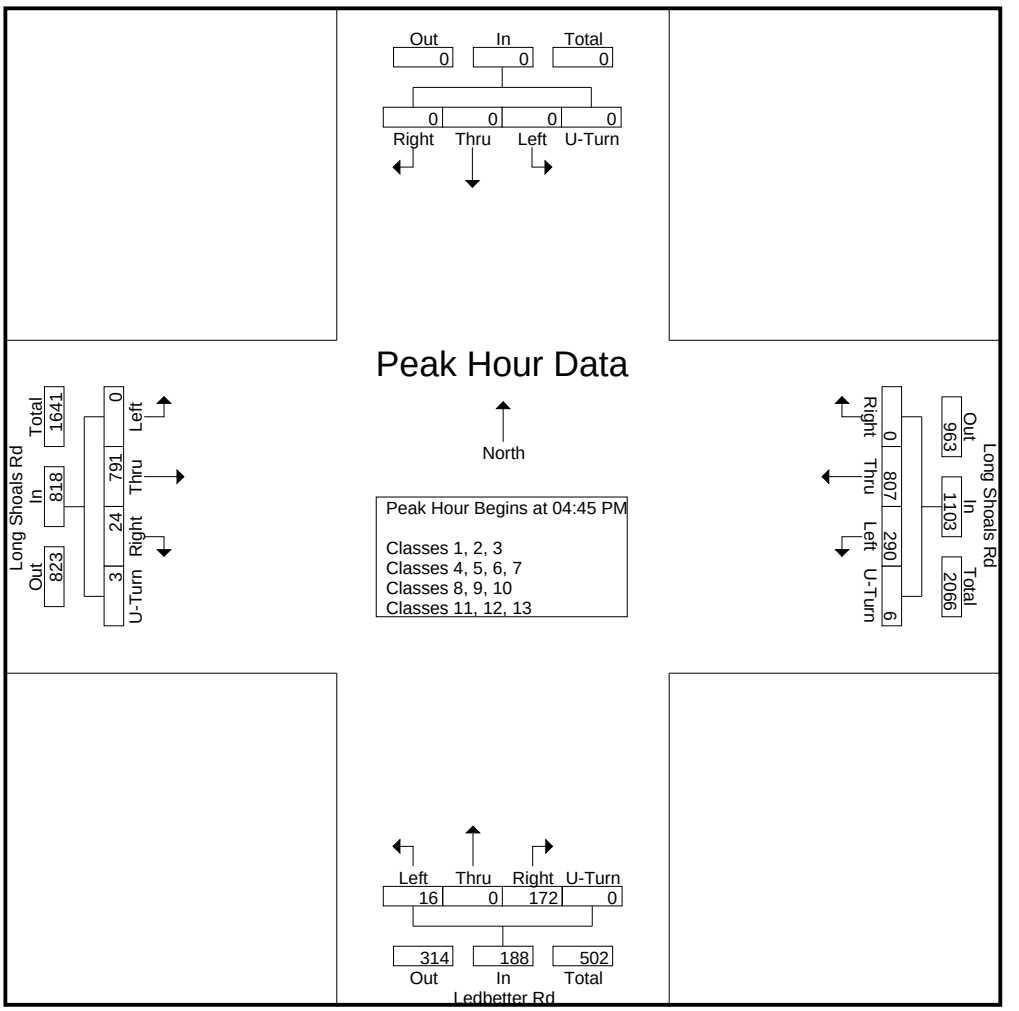

DocuSign Envelope ID: 5C03745C-4B01-4834-A65D-B77F558A4F46

Quality Counts

920 Blairhill Rd, Ste B-106
Charlotte, NC 28217

File Name : 15411716 - Ledbetter Rd -- Long Shoals Rd
Site Code : 15411716
Start Date : 4/20/2021
Page No : 1

Groups Printed- Classes 1, 2, 3

	Southbound					Long Shoals Rd Westbound					Ledbetter Rd Northbound					Long Shoals Rd Eastbound					
Start Time	Left	Thru	Right	U-Turn	App. Total	Left	Thru	Right	U-Turn	App. Total	Left	Thru	Right	U-Turn	App. Total	Left	Thru	Right	U-Turn	App. Total	Int. Total
06:00 AM	0	0	0	0	0	6	31	0	0	37	0	0	11	0	11	0	67	0	0	67	115
06:15 AM	0	0	0	0	0	9	52	0	0	61	0	0	22	0	22	0	67	0	0	67	150
06:30 AM	0	0	0	0	0	7	88	0	0	95	0	0	24	0	24	0	85	2	0	87	206
06:45 AM	0	0	0	0	0	16	124	0	2	142	2	0	29	0	31	0	94	2	0	96	269
Total	0	0	0	0	0	38	295	0	2	335	2	0	86	0	88	0	313	4	0	317	740
07:00 AM	0	0	0	0	0	12	98	0	1	111	0	0	61	0	61	0	129	1	0	130	302
07:15 AM	0	0	0	0	0	23	171	0	0	194	2	0	90	0	92	0	190	2	0	192	478
07:30 AM	0	0	0	0	0	30	208	0	1	239	6	0	75	0	81	0	232	4	0	236	556
07:45 AM	0	0	0	0	0	39	203	0	0	242	7	0	77	0	84	0	227	2	1	230	556
Total	0	0	0	0	0	104	680	0	2	786	15	0	303	0	318	0	778	9	1	788	1892
08:00 AM	0	0	0	0	0	30	180	0	1	211	2	0	61	0	63	0	185	2	1	188	462
08:15 AM	0	0	0	0	0	26	143	0	0	169	1	0	58	0	59	0	177	2	1	180	408
08:30 AM	0	0	0	0	0	19	130	0	1	150	1	0	23	0	24	0	169	2	0	171	345
08:45 AM	0	0	0	0	0	28	142	0	0	170	1	0	38	0	39	0	174	4	0	178	387
Total	0	0	0	0	0	103	595	0	2	700	5	0	180	0	185	0	705	10	2	717	1602
09:00 AM	0	0	0	0	0	20	110	0	1	131	0	0	35	0	35	0	128	2	3	133	299
09:15 AM	0	0	0	0	0	24	108	0	3	135	2	0	31	0	33	0	133	2	3	138	306
09:30 AM	0	0	0	0	0	14	103	0	3	120	1	0	50	0	51	0	151	1	1	153	324
09:45 AM	0	0	0	0	0	26	105	0	3	134	1	0	36	0	37	0	125	1	0	126	297
Total	0	0	0	0	0	84	426	0	10	520	4	0	152	0	156	0	537	6	7	550	1226
10:00 AM	0	0	0	0	0	27	95	0	0	122	3	0	33	0	36	0	108	1	1	110	268
10:15 AM	0	0	0	0	0	28	88	0	1	117	5	0	29	0	34	0	116	2	0	118	269
10:30 AM	0	0	0	0	0	27	113	0	3	143	2	0	30	0	32	0	120	2	0	122	297
10:45 AM	0	0	0	0	0	20	117	0	1	138	0	0	20	0	20	0	127	4	0	131	289
Total	0	0	0	0	0	102	413	0	5	520	10	0	112	0	122	0	471	9	1	481	1123
11:00 AM	0	0	0	0	0	19	114	0	1	134	1	0	32	0	33	0	107	1	0	108	275
11:15 AM	0	0	0	0	0	27	128	0	1	156	2	0	27	1	30	0	147	1	0	148	334
11:30 AM	0	0	0	0	0	33	138	0	0	171	4	0	31	0	35	0	183	1	0	184	390
11:45 AM	0	0	0	0	0	27	135	0	5	167	2	0	30	0	32	0	137	2	0	139	338
Total	0	0	0	0	0	106	515	0	7	628	9	0	120	1	130	0	574	5	0	579	1337
12:00 PM	0	0	0	0	0	32	142	0	1	175	3	0	28	1	32	0	192	2	0	194	401
12:15 PM	0	0	0	0	0	24	153	0	1	178	0	0	29	0	29	0	173	1	1	175	382
12:30 PM	0	0	0	0	0	39	163	0	2	204	4	0	28	0	32	0	160	9	0	169	405
12:45 PM	0	0	0	0	0	39	166	0	2	207	5	0	30	0	35	0	156	4	1	161	403
Total	0	0	0	0	0	134	624	0	6	764	12	0	115	1	128	0	681	16	2	699	1591
01:00 PM	0	0	0	0	0	30	159	0	1	190	3	0	30	0	33	0	150	2	2	154	377
01:15 PM	0	0	0	0	0	36	166	0	1	203	5	0	23	0	28	0	160	5	0	165	396
01:30 PM	0	0	0	0	0	33	167	0	1	201	3	0	33	0	36	0	135	3	1	139	376
01:45 PM	0	0	0	0	0	41	168	0	5	214	1	0	42	0	43	0	155	1	1	157	414
Total	0	0	0	0	0	140	660	0	8	808	12	0	128	0	140	0	600	11	4	615	1563
02:00 PM	0	0	0	0	0	29	147	0	0	176	4	0	30	1	35	0	153	5	0	158	369
02:15 PM	0	0	0	0	0	27	166	0	1	194	3	0	24	0	27	0	156	2	0	158	379
02:30 PM	0	0	0	0	0	34	168	0	3	205	7	0	44	0	51	0	199	3	0	202	458
02:45 PM	0	0	0	0	0	41	144	0	3	188	0	0	46	0	46	0	181	11	1	193	427
Total	0	0	0	0	0	131	625	0	7	763	14	0	144	1	159	0	689	21	1	711	1633
03:00 PM	0	0	0	0	0	54	157	0	2	213	1	0	40	0	41	0	198	4	1	203	457
03:15 PM	0	0	0	0	0	49	186	0	1	236	1	0	34	0	35	0	181	4	0	185	456
03:30 PM	0	0	0	0	0	54	150	0	1	205	3	0	39	0	42	0	186	4	0	190	437

DocuSign Envelope ID: 5C03745C-4B01-4834-A65D-B77F558A4F46

Quality Counts

920 Blairhill Rd, Ste B-106
Charlotte, NC 28217

File Name : 15411716 - Ledbetter Rd -- Long Shoals Rd
Site Code : 15411716
Start Date : 4/20/2021
Page No : 2

Groups Printed- Classes 1, 2, 3

	Southbound					Long Shoals Rd Westbound					Ledbetter Rd Northbound					Long Shoals Rd Eastbound					
Start Time	Left	Thru	Right	U-Turn	App. Total	Left	Thru	Right	U-Turn	App. Total	Left	Thru	Right	U-Turn	App. Total	Left	Thru	Right	U-Turn	App. Total	Int. Total
03:45 PM	0	0	0	0	0	58	197	0	1	256	4	0	35	0	39	0	204	5	1	210	505
Total	0	0	0	0	0	215	690	0	5	910	9	0	148	0	157	0	769	17	2	788	1855
04:00 PM	0	0	0	0	0	54	164	0	1	219	3	0	30	0	33	0	172	4	0	176	428
04:15 PM	0	0	0	0	0	64	219	0	0	283	8	0	32	0	40	0	195	4	1	200	523
04:30 PM	0	0	0	0	0	69	172	0	1	242	0	0	29	0	29	0	172	3	1	176	447
04:45 PM	0	0	0	0	0	80	180	0	2	262	5	0	43	0	48	0	188	5	0	193	503
Total	0	0	0	0	0	267	735	0	4	1006	16	0	134	0	150	0	727	16	2	745	1901
05:00 PM	0	0	0	0	0	63	185	0	2	250	4	0	39	0	43	0	213	5	0	218	511
05:15 PM	0	0	0	0	0	75	202	0	1	278	4	0	50	0	54	0	198	7	2	207	539
05:30 PM	0	0	0	0	0	67	203	0	1	271	3	0	40	0	43	0	162	6	1	169	483
05:45 PM	0	0	0	0	0	50	203	0	2	255	3	0	37	0	40	0	182	5	0	187	482
Total	0	0	0	0	0	255	793	0	6	1054	14	0	166	0	180	0	755	23	3	781	2015
06:00 PM	0	0	0	0	0	58	185	0	2	245	5	0	38	0	43	0	153	4	0	157	445
06:15 PM	0	0	0	0	0	47	178	0	1	226	6	0	29	0	35	0	120	5	0	125	386
06:30 PM	0	0	0	0	0	58	141	0	0	199	3	0	34	0	37	0	120	0	0	120	356
06:45 PM	0	0	0	0	0	30	136	0	2	168	5	0	31	0	36	0	118	7	0	125	329
Total	0	0	0	0	0	193	640	0	5	838	19	0	132	0	151	0	511	16	0	527	1516
Grand Total	0	0	0	0	0	1872	7691	0	69	9632	141	0	1920	3	2064	0	8110	163	25	8298	19994
Apprch %	0	0	0	0		19.4	79.8	0	0.7		6.8	0	93	0.1		0	97.7	2	0.3		
Total %	0	0	0	0	0	9.4	38.5	0	0.3	48.2	0.7	0	9.6	0	10.3	0	40.6	0.8	0.1	41.5	

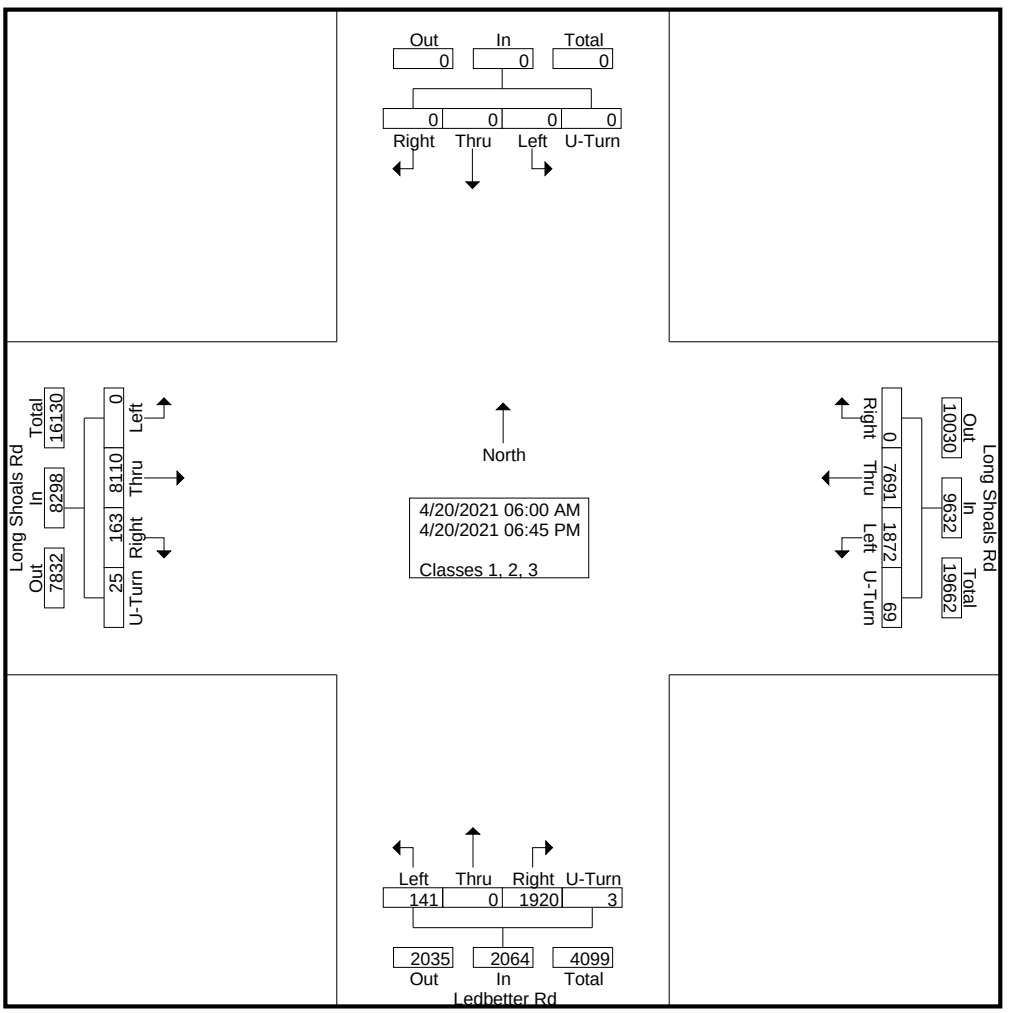

DocuSign Envelope ID: 5C03745C-4B01-4834-A65D-B77F558A4F46

Quality Counts

920 Blairhill Rd, Ste B-106
Charlotte, NC 28217

File Name : 15411716 - Ledbetter Rd -- Long Shoals Rd
Site Code : 15411716
Start Date : 4/20/2021
Page No : 3

	Southbound					Long Shoals Rd Westbound					Ledbetter Rd Northbound					Long Shoals Rd Eastbound					
Start Time	Left	Thru	Right	U-Turn	App. Total	Left	Thru	Right	U-Turn	App. Total	Left	Thru	Right	U-Turn	App. Total	Left	Thru	Right	U-Turn	App. Total	Int. Total
Peak Hour Analysis From 06:00 AM to 11:45 AM - Peak 1 of 1																					
Peak Hour for Entire Intersection Begins at 07:15 AM																					
07:15 AM	0	0	0	0	0	23	171	0	0	194	2	0	**90**	0	**92**	0	190	2	0	192	478
07:30 AM	0	0	0	0	0	30	**208**	0	**1**	239	6	0	75	0	81	0	**232**	**4**	0	**236**	**556**
07:45 AM	0	0	0	0	0	**39**	203	0	0	**242**	**7**	0	77	0	84	0	227	2	**1**	230	556
08:00 AM	0	0	0	0	0	30	180	0	1	211	2	0	61	0	63	0	185	2	1	188	462
Total Volume	0	0	0	0	0	122	762	0	2	886	17	0	303	0	320	0	834	10	2	846	2052
% App. Total	0	0	0	0		13.8	86	0	0.2		5.3	0	94.7	0		0	98.6	1.2	0.2		
PHF	.000	.000	.000	.000	.000	.782	.916	.000	.500	.915	.607	.000	.842	.000	.870	.000	.899	.625	.500	.896	.923

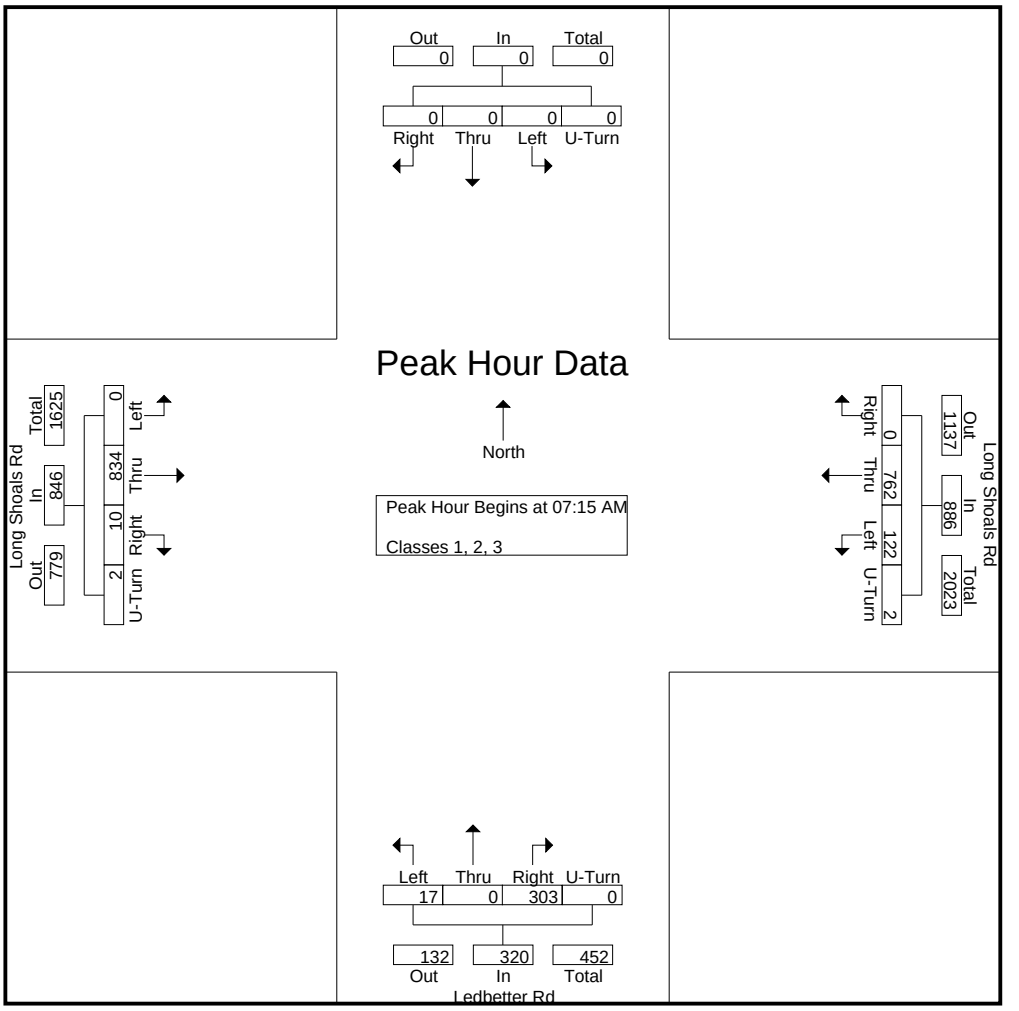

DocuSign Envelope ID: 5C03745C-4B01-4834-A65D-B77F558A4F46

Quality Counts

920 Blairhill Rd, Ste B-106
Charlotte, NC 28217

File Name : 15411716 - Ledbetter Rd -- Long Shoals Rd
Site Code : 15411716
Start Date : 4/20/2021
Page No : 4

	Southbound					Long Shoals Rd Westbound					Ledbetter Rd Northbound					Long Shoals Rd Eastbound					
Start Time	Left	Thru	Right	U-Turn	App. Total	Left	Thru	Right	U-Turn	App. Total	Left	Thru	Right	U-Turn	App. Total	Left	Thru	Right	U-Turn	App. Total	Int. Total
Peak Hour Analysis From 12:00 PM to 06:45 PM - Peak 1 of 1																					
Peak Hour for Entire Intersection Begins at 04:45 PM																					
04:45 PM	0	0	0	0	0	**80**	180	0	**2**	262	**5**	0	43	0	48	0	188	5	0	193	503
05:00 PM	0	0	0	0	0	63	185	0	2	250	4	0	39	0	43	0	**213**	5	0	**218**	511
05:15 PM	0	0	0	0	0	75	202	0	1	**278**	4	0	**50**	0	**54**	0	198	**7**	**2**	207	**539**
05:30 PM	0	0	0	0	0	67	**203**	0	1	271	3	0	40	0	43	0	162	6	1	169	483
Total Volume	0	0	0	0	0	285	770	0	6	1061	16	0	172	0	188	0	761	23	3	787	2036
% App. Total	0	0	0	0		26.9	72.6	0	0.6		8.5	0	91.5	0		0	96.7	2.9	0.4		
PHF	.000	.000	.000	.000	.000	.891	.948	.000	.750	.954	.800	.000	.860	.000	.870	.000	.893	.821	.375	.903	.944

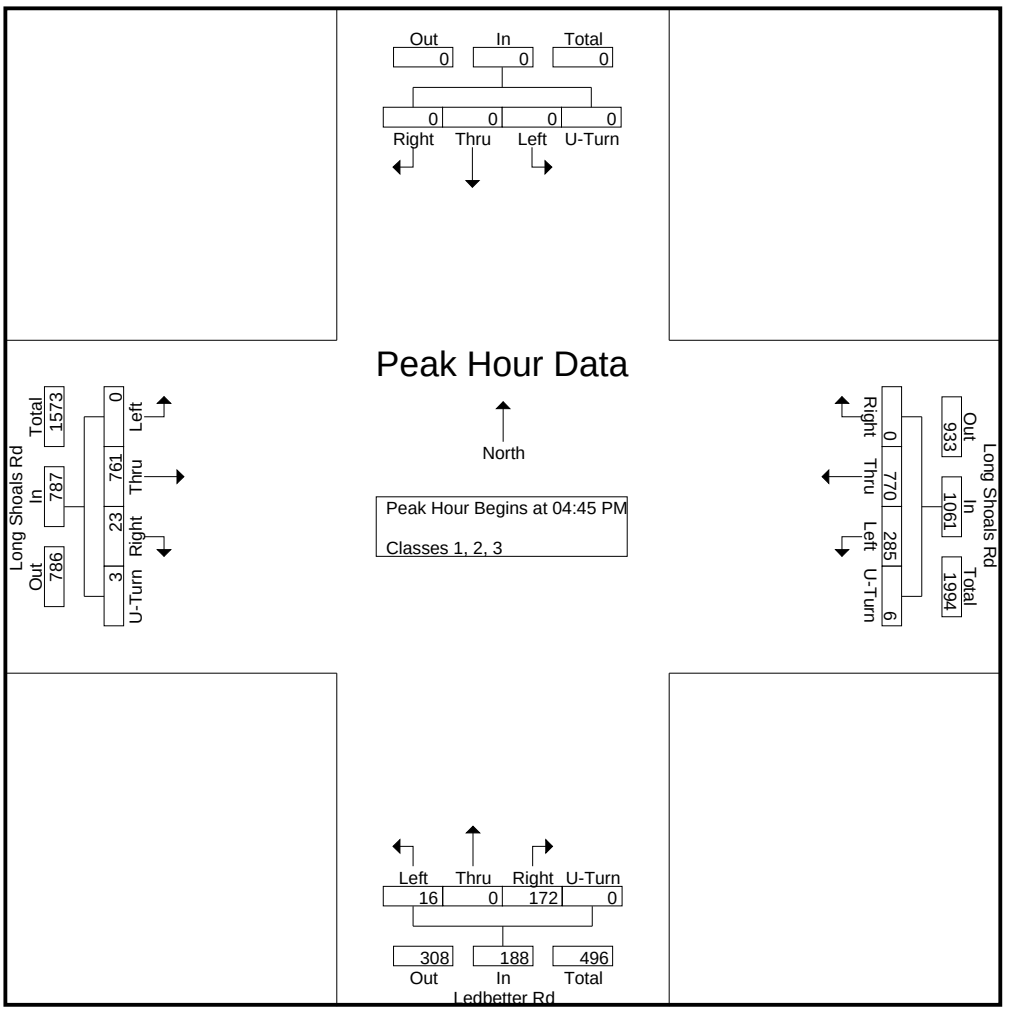

DocuSign Envelope ID: 5C03745C-4B01-4834-A65D-B77F558A4F46

Quality Counts

920 Blairhill Rd, Ste B-106
Charlotte, NC 28217

File Name : 15411716 - Ledbetter Rd -- Long Shoals Rd
Site Code : 15411716
Start Date : 4/20/2021
Page No : 1

Groups Printed- Classes 4, 5, 6, 7

	Southbound					Long Shoals Rd Westbound					Ledbetter Rd Northbound					Long Shoals Rd Eastbound					
Start Time	Left	Thru	Right	U-Turn	App. Total	Left	Thru	Right	U-Turn	App. Total	Left	Thru	Right	U-Turn	App. Total	Left	Thru	Right	U-Turn	App. Total	Int. Total
06:00 AM	0	0	0	0	0	0	0	0	0	0	0	0	0	0	0	0	2	0	0	2	2
06:15 AM	0	0	0	0	0	2	3	0	0	5	0	0	1	0	1	0	3	0	0	3	9
06:30 AM	0	0	0	0	0	1	1	0	0	2	0	0	0	0	0	0	3	0	0	3	5
06:45 AM	0	0	0	0	0	0	1	0	0	1	0	0	0	0	0	0	4	0	0	4	5
Total	0	0	0	0	0	3	5	0	0	8	0	0	1	0	1	0	12	0	0	12	21
07:00 AM	0	0	0	0	0	0	4	0	0	4	1	0	0	0	1	0	3	1	0	4	9
07:15 AM	0	0	0	0	0	0	9	0	0	9	0	0	0	0	0	0	12	0	0	12	21
07:30 AM	0	0	0	0	0	0	16	0	0	16	0	0	0	0	0	0	6	0	0	6	22
07:45 AM	0	0	0	0	0	2	11	0	0	13	0	0	0	0	0	0	13	1	0	14	27
Total	0	0	0	0	0	2	40	0	0	42	1	0	0	0	1	0	34	2	0	36	79
08:00 AM	0	0	0	0	0	1	13	0	0	14	1	0	0	0	1	0	19	1	0	20	35
08:15 AM	0	0	0	0	0	1	17	0	0	18	0	0	0	0	0	0	12	0	0	12	30
08:30 AM	0	0	0	0	0	0	8	0	0	8	0	0	1	0	1	0	19	3	0	22	31
08:45 AM	0	0	0	0	0	2	14	0	0	16	0	0	0	0	0	0	11	0	4	15	31
Total	0	0	0	0	0	4	52	0	0	56	1	0	1	0	2	0	61	4	4	69	127
09:00 AM	0	0	0	0	0	3	10	0	0	13	0	0	0	0	0	0	6	0	0	6	19
09:15 AM	0	0	0	0	0	0	11	0	0	11	0	0	0	0	0	0	17	0	0	17	28
09:30 AM	0	0	0	0	0	0	12	0	0	12	1	0	0	0	1	0	12	0	0	12	25
09:45 AM	0	0	0	0	0	0	15	0	0	15	0	0	1	0	1	0	15	0	0	15	31
Total	0	0	0	0	0	3	48	0	0	51	1	0	1	0	2	0	50	0	0	50	103
10:00 AM	0	0	0	0	0	2	21	0	0	23	0	0	0	0	0	0	10	1	0	11	34
10:15 AM	0	0	0	0	0	5	12	0	0	17	0	0	0	0	0	0	12	0	0	12	29
10:30 AM	0	0	0	0	0	0	12	0	0	12	0	0	0	0	0	0	15	0	0	15	27
10:45 AM	0	0	0	0	0	0	17	0	0	17	1	0	1	0	2	0	13	0	0	13	32
Total	0	0	0	0	0	7	62	0	0	69	1	0	1	0	2	0	50	1	0	51	122
11:00 AM	0	0	0	0	0	1	17	0	0	18	0	0	0	0	0	0	3	0	0	3	21
11:15 AM	0	0	0	0	0	3	15	0	0	18	0	0	0	0	0	0	15	1	0	16	34
11:30 AM	0	0	0	0	0	0	10	0	0	10	0	0	0	0	0	0	7	0	0	7	17
11:45 AM	0	0	0	0	0	1	11	0	0	12	0	0	0	0	0	0	17	0	0	17	29
Total	0	0	0	0	0	5	53	0	0	58	0	0	0	0	0	0	42	1	0	43	101
12:00 PM	0	0	0	0	0	1	21	0	0	22	0	0	0	0	0	0	13	1	0	14	36
12:15 PM	0	0	0	0	0	1	13	0	0	14	0	0	1	0	1	0	8	0	0	8	23
12:30 PM	0	0	0	0	0	3	9	0	0	12	0	0	0	0	0	0	11	0	0	11	23
12:45 PM	0	0	0	0	0	3	19	0	0	22	0	0	1	0	1	0	13	0	0	13	36
Total	0	0	0	0	0	8	62	0	0	70	0	0	2	0	2	0	45	1	0	46	118
01:00 PM	0	0	0	0	0	1	18	0	1	20	0	0	1	0	1	0	7	0	0	7	28
01:15 PM	0	0	0	0	0	1	13	0	0	14	0	0	3	0	3	0	18	0	0	18	35
01:30 PM	0	0	0	0	0	2	6	0	0	8	0	0	0	0	0	0	12	0	0	12	20
01:45 PM	0	0	0	0	0	1	9	0	0	10	1	0	0	0	1	0	8	1	0	9	20
Total	0	0	0	0	0	5	46	0	1	52	1	0	4	0	5	0	45	1	0	46	103
02:00 PM	0	0	0	0	0	1	15	0	0	16	0	0	1	0	1	0	3	0	0	3	20
02:15 PM	0	0	0	0	0	1	12	0	0	13	0	0	0	0	0	0	16	0	0	16	29
02:30 PM	0	0	0	0	0	0	14	0	0	14	0	0	1	0	1	0	17	0	0	17	32
02:45 PM	0	0	0	0	0	3	11	0	0	14	0	0	0	0	0	0	6	1	0	7	21
Total	0	0	0	0	0	5	52	0	0	57	0	0	2	0	2	0	42	1	0	43	102
03:00 PM	0	0	0	0	0	1	22	0	0	23	0	0	2	0	2	0	13	0	0	13	38
03:15 PM	0	0	0	0	0	2	11	0	0	13	1	0	0	0	1	0	4	1	0	5	19
03:30 PM	0	0	0	0	0	1	8	0	0	9	0	0	0	0	0	0	17	0	0	17	26

DocuSign Envelope ID: 5C03745C-4B01-4834-A65D-B77F558A4F46

Quality Counts

920 Blairhill Rd, Ste B-106
Charlotte, NC 28217

File Name : 15411716 - Ledbetter Rd -- Long Shoals Rd
Site Code : 15411716
Start Date : 4/20/2021

Groups Printed- Classes 4, 5, 6, 7

	Southbound					Long Shoals Rd Westbound					Ledbetter Rd Northbound					Long Shoals Rd Eastbound					
Start Time	Left	Thru	Right	U-Turn	App. Total	Left	Thru	Right	U-Turn	App. Total	Left	Thru	Right	U-Turn	App. Total	Left	Thru	Right	U-Turn	App. Total	Int. Total
03:45 PM	0	0	0	0	0	0	18	0	0	18	0	0	1	0	1	0	8	0	0	8	27
Total	0	0	0	0	0	4	59	0	0	63	1	0	3	0	4	0	42	1	0	43	110
04:00 PM	0	0	0	0	0	0	13	0	0	13	1	0	2	0	3	0	8	1	0	9	25
04:15 PM	0	0	0	0	0	0	7	0	0	7	0	0	1	0	1	0	11	1	1	13	21
04:30 PM	0	0	0	0	0	3	18	0	0	21	0	0	0	0	0	0	8	0	0	8	29
04:45 PM	0	0	0	0	0	1	7	0	0	8	0	0	0	0	0	0	8	0	0	8	16
Total	0	0	0	0	0	4	45	0	0	49	1	0	3	0	4	0	35	2	1	38	91
05:00 PM	0	0	0	0	0	2	7	0	0	9	0	0	0	0	0	0	5	0	0	5	14
05:15 PM	0	0	0	0	0	1	6	0	0	7	0	0	0	0	0	0	1	0	0	1	8
05:30 PM	0	0	0	0	0	1	6	0	0	7	0	0	0	0	0	0	4	0	0	4	11
05:45 PM	0	0	0	0	0	0	6	0	0	6	0	0	0	0	0	0	7	0	0	7	13
Total	0	0	0	0	0	4	25	0	0	29	0	0	0	0	0	0	17	0	0	17	46
06:00 PM	0	0	0	0	0	2	5	0	0	7	0	0	0	0	0	0	4	0	0	4	11
06:15 PM	0	0	0	0	0	1	6	0	0	7	0	0	0	0	0	0	4	0	0	4	11
06:30 PM	0	0	0	0	0	1	2	0	0	3	0	0	0	0	0	0	0	0	0	0	3
06:45 PM	0	0	0	0	0	0	6	0	0	6	0	0	0	0	0	0	2	0	0	2	8
Total	0	0	0	0	0	4	19	0	0	23	0	0	0	0	0	0	10	0	0	10	33
Grand Total	0	0	0	0	0	58	568	0	1	627	7	0	18	0	25	0	485	14	5	504	1156
Apprch %	0	0	0	0		9.3	90.6	0	0.2		28	0	72	0		0	96.2	2.8	1		
Total %	0	0	0	0	0	5	49.1	0	0.1	54.2	0.6	0	1.6	0	2.2	0	42	1.2	0.4	43.6	

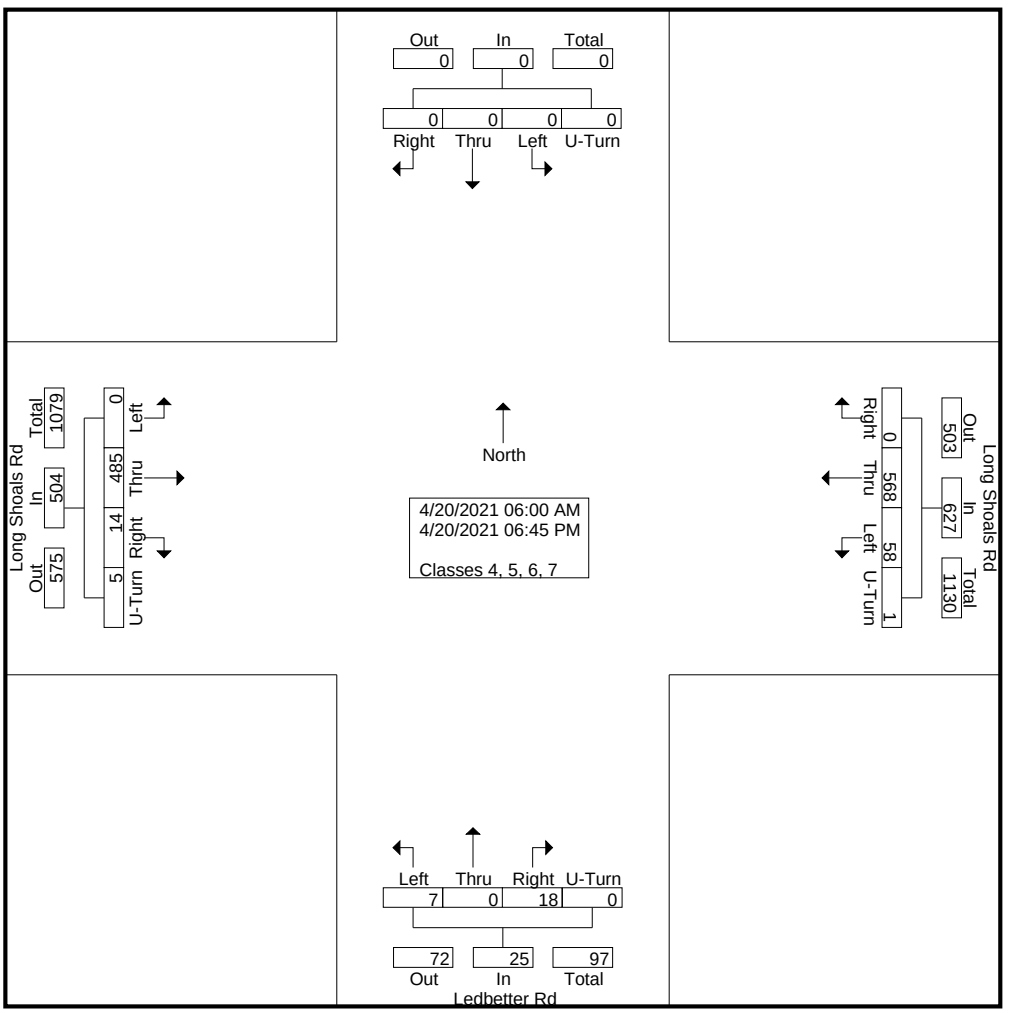

DocuSign Envelope ID: 5C03745C-4B01-4834-A65D-B77F558A4F46

Quality Counts

920 Blairhill Rd, Ste B-106
Charlotte, NC 28217

File Name : 15411716 - Ledbetter Rd -- Long Shoals Rd
Site Code : 15411716
Start Date : 4/20/2021
Page No : 3

	Southbound					Long Shoals Rd Westbound					Ledbetter Rd Northbound					Long Shoals Rd Eastbound					
Start Time	Left	Thru	Right	U-Turn	App. Total	Left	Thru	Right	U-Turn	App. Total	Left	Thru	Right	U-Turn	App. Total	Left	Thru	Right	U-Turn	App. Total	Int. Total
Peak Hour Analysis From 06:00 AM to 11:45 AM - Peak 1 of 1																					
Peak Hour for Entire Intersection Begins at 08:00 AM																					
08:00 AM	0	0	0	0	0	1	13	0	0	14	**1**	0	0	0	**1**	0	**19**	1	0	20	**35**
08:15 AM	0	0	0	0	0	1	**17**	0	0	**18**	0	0	0	0	0	0	12	0	0	12	30
08:30 AM	0	0	0	0	0	0	8	0	0	8	0	0	**1**	0	1	0	19	**3**	0	**22**	31
08:45 AM	0	0	0	0	0	**2**	14	0	0	16	0	0	0	0	0	0	11	0	**4**	15	31
Total Volume	0	0	0	0	0	4	52	0	0	56	1	0	1	0	2	0	61	4	4	69	127
% App. Total	0	0	0	0		7.1	92.9	0	0		50	0	50	0		0	88.4	5.8	5.8		
PHF	.000	.000	.000	.000	.000	.500	.765	.000	.000	.778	.250	.000	.250	.000	.500	.000	.803	.333	.250	.784	.907

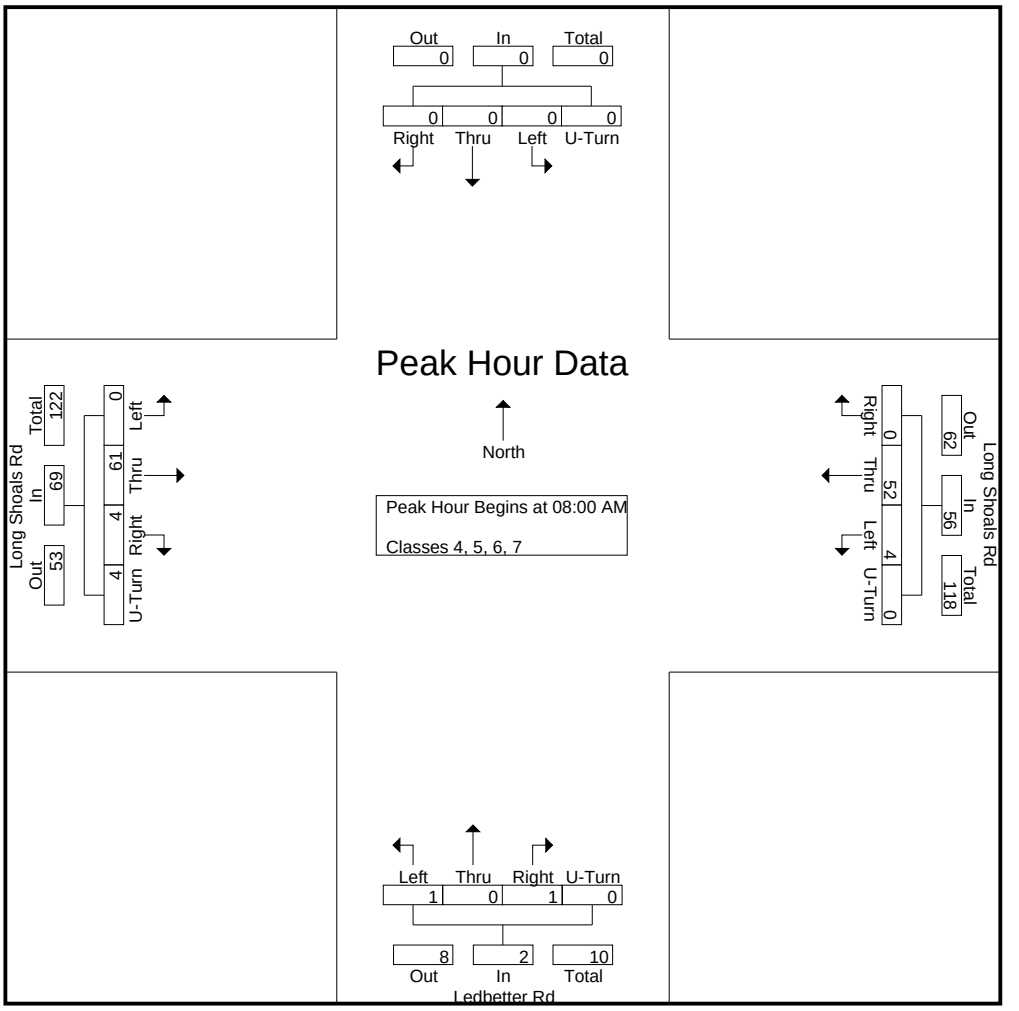

DocuSign Envelope ID: 5C03745C-4B01-4834-A65D-B77F558A4F46

Quality Counts

920 Blairhill Rd, Ste B-106
Charlotte, NC 28217

File Name : 15411716 - Ledbetter Rd -- Long Shoals Rd
Site Code : 15411716
Start Date : 4/20/2021
Page No : 4

	Southbound					Long Shoals Rd Westbound					Ledbetter Rd Northbound					Long Shoals Rd Eastbound					
Start Time	Left	Thru	Right	U-Turn	App. Total	Left	Thru	Right	U-Turn	App. Total	Left	Thru	Right	U-Turn	App. Total	Left	Thru	Right	U-Turn	App. Total	Int. Total
Peak Hour Analysis From 12:00 PM to 06:45 PM - Peak 1 of 1																					
Peak Hour for Entire Intersection Begins at 12:30 PM																					
12:30 PM	0	0	0	0	0	**3**	9	0	0	12	0	0	0	0	0	0	11	0	0	11	23
12:45 PM	0	0	0	0	0	3	**19**	0	0	**22**	0	0	1	0	1	0	13	0	0	13	**36**
01:00 PM	0	0	0	0	0	1	18	0	**1**	20	0	0	1	0	1	0	7	0	0	7	28
01:15 PM	0	0	0	0	0	1	13	0	0	14	0	0	**3**	0	**3**	0	**18**	0	0	**18**	35
Total Volume	0	0	0	0	0	8	59	0	1	68	0	0	5	0	5	0	49	0	0	49	122
% App. Total	0	0	0	0		11.8	86.8	0	1.5		0	0	100	0		0	100	0	0		
PHF	.000	.000	.000	.000	.000	.667	.776	.000	.250	.773	.000	.000	.417	.000	.417	.000	.681	.000	.000	.681	.847

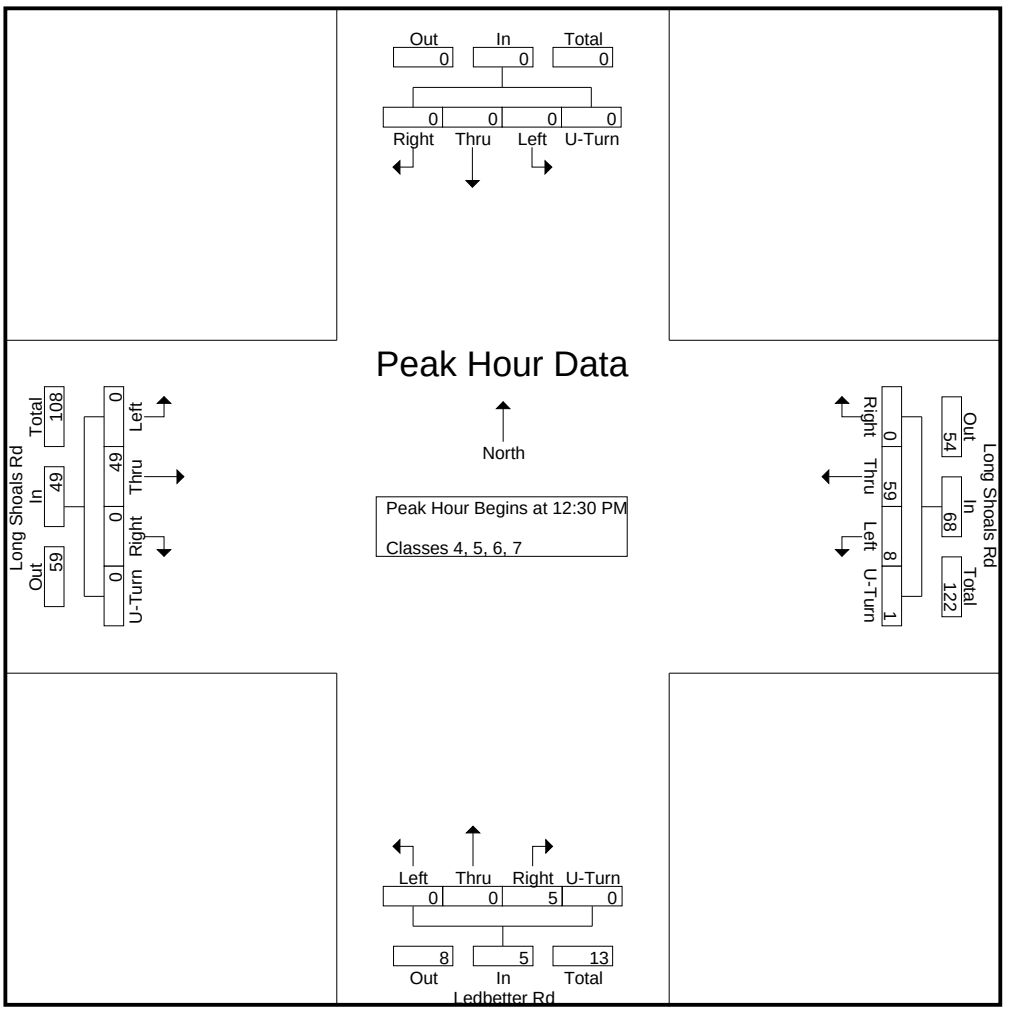

DocuSign Envelope ID: 5C03745C-4B01-4834-A65D-B77F558A4F46

Quality Counts

920 Blairhill Rd, Ste B-106
Charlotte, NC 28217

File Name : 15411716 - Ledbetter Rd -- Long Shoals Rd
Site Code : 15411716
Start Date : 4/20/2021
Page No : 1

Groups Printed- Classes 8, 9, 10

	Southbound					Long Shoals Rd Westbound					Ledbetter Rd Northbound					Long Shoals Rd Eastbound					
Start Time	Left	Thru	Right	U-Turn	App. Total	Left	Thru	Right	U-Turn	App. Total	Left	Thru	Right	U-Turn	App. Total	Left	Thru	Right	U-Turn	App. Total	Int. Total
06:00 AM	0	0	0	0	0	0	0	0	0	0	0	0	0	0	0	0	3	0	0	3	3
06:15 AM	0	0	0	0	0	0	1	0	0	1	0	0	0	0	0	0	1	0	0	1	2
06:30 AM	0	0	0	0	0	0	3	0	0	3	0	0	0	0	0	0	1	0	0	1	4
06:45 AM	0	0	0	0	0	0	4	0	0	4	0	0	0	0	0	0	1	0	0	1	5
Total	0	0	0	0	0	0	8	0	0	8	0	0	0	0	0	0	6	0	0	6	14
07:00 AM	0	0	0	0	0	0	3	0	0	3	0	0	0	0	0	0	2	0	0	2	5
07:15 AM	0	0	0	0	0	0	2	0	0	2	0	0	0	0	0	0	0	0	0	0	2
07:30 AM	0	0	0	0	0	0	2	0	0	2	0	0	0	0	0	0	1	0	0	1	3
07:45 AM	0	0	0	0	0	0	5	0	0	5	0	0	0	0	0	0	7	0	0	7	12
Total	0	0	0	0	0	0	12	0	0	12	0	0	0	0	0	0	10	0	0	10	22
08:00 AM	0	0	0	0	0	0	4	0	0	4	0	0	0	0	0	0	1	0	0	1	5
08:15 AM	0	0	0	0	0	0	2	0	0	2	0	0	0	0	0	0	2	0	0	2	4
08:30 AM	0	0	0	0	0	0	1	0	0	1	0	0	0	0	0	0	1	0	0	1	2
08:45 AM	0	0	0	0	0	0	4	0	0	4	0	0	0	0	0	0	8	0	0	8	12
Total	0	0	0	0	0	0	11	0	0	11	0	0	0	0	0	0	12	0	0	12	23
09:00 AM	0	0	0	0	0	0	5	0	0	5	0	0	0	0	0	0	3	0	0	3	8
09:15 AM	0	0	0	0	0	0	5	0	0	5	0	0	0	0	0	0	3	0	0	3	8
09:30 AM	0	0	0	0	0	0	3	0	0	3	0	0	0	0	0	0	3	0	0	3	6
09:45 AM	0	0	0	0	0	0	2	0	0	2	0	0	0	0	0	0	2	0	0	2	4
Total	0	0	0	0	0	0	15	0	0	15	0	0	0	0	0	0	11	0	0	11	26
10:00 AM	0	0	0	0	0	0	7	0	0	7	0	0	0	0	0	0	2	0	0	2	9
10:15 AM	0	0	0	0	0	0	4	0	0	4	0	0	0	0	0	0	2	0	0	2	6
10:30 AM	0	0	0	0	0	0	3	0	0	3	0	0	0	0	0	0	4	0	0	4	7
10:45 AM	0	0	0	0	0	0	3	0	0	3	0	0	0	0	0	0	4	0	0	4	7
Total	0	0	0	0	0	0	17	0	0	17	0	0	0	0	0	0	12	0	0	12	29
11:00 AM	0	0	0	0	0	0	6	0	0	6	0	0	0	0	0	0	3	0	0	3	9
11:15 AM	0	0	0	0	0	2	2	0	0	4	0	0	0	0	0	0	5	0	0	5	9
11:30 AM	0	0	0	0	0	0	2	0	0	2	0	0	0	0	0	0	7	0	0	7	9
11:45 AM	0	0	0	0	0	0	2	0	0	2	0	0	0	0	0	0	5	0	0	5	7
Total	0	0	0	0	0	2	12	0	0	14	0	0	0	0	0	0	20	0	0	20	34
12:00 PM	0	0	0	0	0	1	4	0	0	5	0	0	0	0	0	0	2	0	0	2	7
12:15 PM	0	0	0	0	0	0	5	0	0	5	0	0	0	0	0	0	3	0	0	3	8
12:30 PM	0	0	0	0	0	0	2	0	0	2	0	0	0	0	0	0	4	0	0	4	6
12:45 PM	0	0	0	0	0	0	2	0	0	2	0	0	0	0	0	0	1	0	0	1	3
Total	0	0	0	0	0	1	13	0	0	14	0	0	0	0	0	0	10	0	0	10	24
01:00 PM	0	0	0	0	0	0	3	0	0	3	0	0	0	0	0	0	3	0	0	3	6
01:15 PM	0	0	0	0	0	1	5	0	0	6	0	0	0	0	0	0	3	0	0	3	9
01:30 PM	0	0	0	0	0	0	3	0	0	3	0	0	0	0	0	0	4	0	0	4	7
01:45 PM	0	0	0	0	0	0	2	0	0	2	0	0	0	0	0	0	4	0	0	4	6
Total	0	0	0	0	0	1	13	0	0	14	0	0	0	0	0	0	14	0	0	14	28
02:00 PM	0	0	0	0	0	0	4	0	0	4	0	0	0	0	0	0	6	0	0	6	10
02:15 PM	0	0	0	0	0	0	2	0	0	2	0	0	0	0	0	0	2	0	0	2	4
02:30 PM	0	0	0	0	0	0	3	0	0	3	0	0	0	0	0	0	1	0	0	1	4
02:45 PM	0	0	0	0	0	0	5	0	0	5	0	0	0	0	0	0	1	0	0	1	6
Total	0	0	0	0	0	0	14	0	0	14	0	0	0	0	0	0	10	0	0	10	24
03:00 PM	0	0	0	0	0	0	3	0	0	3	0	0	0	0	0	0	1	0	0	1	4
03:15 PM	0	0	0	0	0	0	3	0	0	3	0	0	0	0	0	0	4	0	0	4	7
03:30 PM	0	0	0	0	0	0	4	0	0	4	0	0	0	0	0	0	1	0	0	1	5

DocuSign Envelope ID: 5C03745C-4B01-4834-A65D-B77F558A4F46

Quality Counts

920 Blairhill Rd, Ste B-106
Charlotte, NC 28217

File Name : 15411716 - Ledbetter Rd -- Long Shoals Rd
Site Code : 15411716
Start Date : 4/20/2021
Page No : 2

Groups Printed- Classes 8, 9, 10

	Southbound					Long Shoals Rd Westbound					Ledbetter Rd Northbound					Long Shoals Rd Eastbound					
Start Time	Left	Thru	Right	U-Turn	App. Total	Left	Thru	Right	U-Turn	App. Total	Left	Thru	Right	U-Turn	App. Total	Left	Thru	Right	U-Turn	App. Total	Int. Total
03:45 PM	0	0	0	0	0	0	1	0	0	1	0	0	0	0	0	0	2	0	0	2	3
Total	0	0	0	0	0	0	11	0	0	11	0	0	0	0	0	0	8	0	0	8	19
04:00 PM	0	0	0	0	0	0	4	0	0	4	0	0	0	0	0	0	4	0	0	4	8
04:15 PM	0	0	0	0	0	0	3	0	0	3	0	0	0	0	0	0	2	0	0	2	5
04:30 PM	0	0	0	0	0	0	6	0	0	6	0	0	0	0	0	0	6	0	0	6	12
04:45 PM	0	0	0	0	0	0	1	0	0	1	0	0	0	0	0	0	0	1	0	1	2
Total	0	0	0	0	0	0	14	0	0	14	0	0	0	0	0	0	12	1	0	13	27
05:00 PM	0	0	0	0	0	0	4	0	0	4	0	0	0	0	0	0	3	0	0	3	7
05:15 PM	0	0	0	0	0	0	2	0	0	2	0	0	0	0	0	0	5	0	0	5	7
05:30 PM	0	0	0	0	0	0	4	0	0	4	0	0	0	0	0	0	4	0	0	4	8
05:45 PM	0	0	0	0	0	0	3	0	0	3	0	0	0	0	0	0	5	0	0	5	8
Total	0	0	0	0	0	0	13	0	0	13	0	0	0	0	0	0	17	0	0	17	30
06:00 PM	0	0	0	0	0	0	1	0	0	1	0	0	0	0	0	0	0	0	0	0	1
06:15 PM	0	0	0	0	0	0	0	0	0	0	0	0	0	0	0	0	3	0	0	3	3
06:30 PM	0	0	0	0	0	0	3	0	0	3	0	0	0	0	0	0	1	0	0	1	4
06:45 PM	0	0	0	0	0	0	0	0	0	0	0	0	0	0	0	0	1	0	0	1	1
Total	0	0	0	0	0	0	4	0	0	4	0	0	0	0	0	0	5	0	0	5	9
Grand Total	0	0	0	0	0	4	157	0	0	161	0	0	0	0	0	0	147	1	0	148	309
Apprch %	0	0	0	0		2.5	97.5	0	0		0	0	0	0		0	99.3	0.7	0		
Total %	0	0	0	0	0	1.3	50.8	0	0	52.1	0	0	0	0	0	0	47.6	0.3	0	47.9	

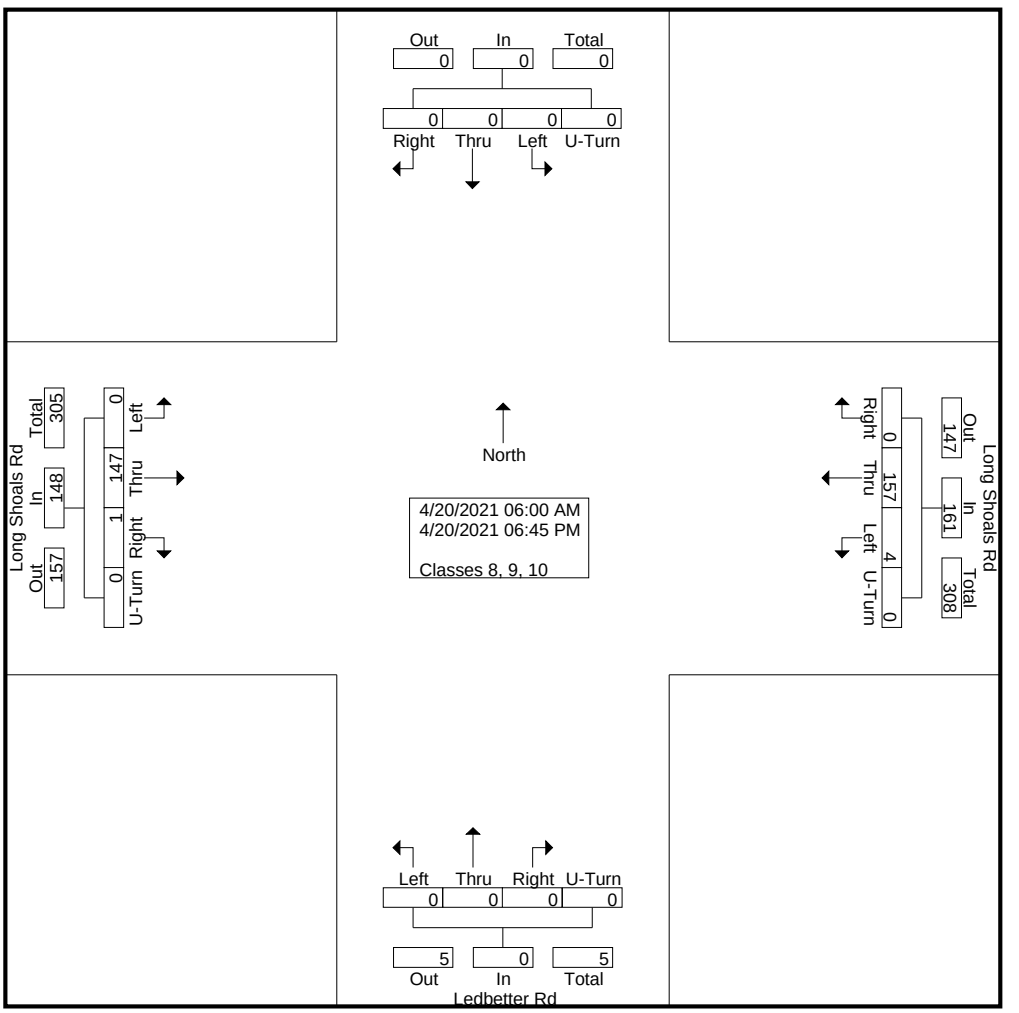

DocuSign Envelope ID: 5C03745C-4B01-4834-A65D-B77F558A4F46

Quality Counts

920 Blairhill Rd, Ste B-106
Charlotte, NC 28217

File Name : 15411716 - Ledbetter Rd -- Long Shoals Rd
Site Code : 15411716
Start Date : 4/20/2021
Page No : 3

	Southbound					Long Shoals Rd Westbound					Ledbetter Rd Northbound					Long Shoals Rd Eastbound					
Start Time	Left	Thru	Right	U-Turn	App. Total	Left	Thru	Right	U-Turn	App. Total	Left	Thru	Right	U-Turn	App. Total	Left	Thru	Right	U-Turn	App. Total	Int. Total
Peak Hour Analysis From 06:00 AM to 11:45 AM - Peak 1 of 1																					
Peak Hour for Entire Intersection Begins at 08:45 AM																					
08:45 AM	0	0	0	0	0	0	4	0	0	4	0	0	0	0	0	0	**8**	0	0	**8**	**12**
09:00 AM	0	0	0	0	0	0	**5**	0	0	**5**	0	0	0	0	0	0	3	0	0	3	8
09:15 AM	0	0	0	0	0	0	5	0	0	5	0	0	0	0	0	0	3	0	0	3	8
09:30 AM	0	0	0	0	0	0	3	0	0	3	0	0	0	0	0	0	3	0	0	3	6
Total Volume	0	0	0	0	0	0	17	0	0	17	0	0	0	0	0	0	17	0	0	17	34
% App. Total	0	0	0	0		0	100	0	0		0	0	0	0		0	100	0	0		
PHF	.000	.000	.000	.000	.000	.000	.850	.000	.000	.850	.000	.000	.000	.000	.000	.000	.531	.000	.000	.531	.708

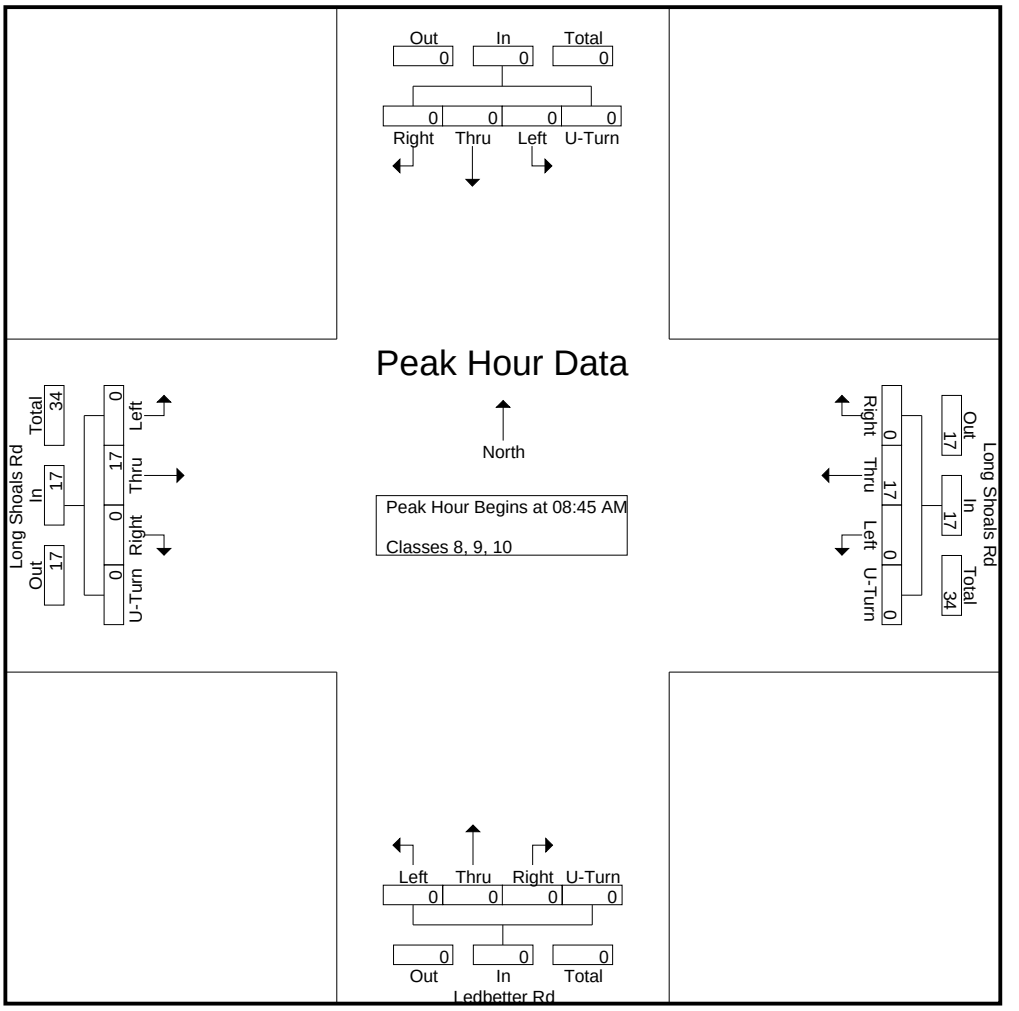

DocuSign Envelope ID: 5C03745C-4B01-4834-A65D-B77F558A4F46

Quality Counts

920 Blairhill Rd, Ste B-106
Charlotte, NC 28217

File Name : 15411716 - Ledbetter Rd -- Long Shoals Rd
Site Code : 15411716
Start Date : 4/20/2021
Page No : 4

	Southbound					Long Shoals Rd Westbound					Ledbetter Rd Northbound					Long Shoals Rd Eastbound					
Start Time	Left	Thru	Right	U-Turn	App. Total	Left	Thru	Right	U-Turn	App. Total	Left	Thru	Right	U-Turn	App. Total	Left	Thru	Right	U-Turn	App. Total	Int. Total
Peak Hour Analysis From 12:00 PM to 06:45 PM - Peak 1 of 1																					
Peak Hour for Entire Intersection Begins at 01:15 PM																					
01:15 PM	0	0	0	0	0	**1**	**5**	0	0	**6**	0	0	0	0	0	0	3	0	0	3	9
01:30 PM	0	0	0	0	0	0	3	0	0	3	0	0	0	0	0	0	4	0	0	4	7
01:45 PM	0	0	0	0	0	0	2	0	0	2	0	0	0	0	0	0	4	0	0	4	6
02:00 PM	0	0	0	0	0	0	4	0	0	4	0	0	0	0	0	0	**6**	0	0	**6**	**10**
Total Volume	0	0	0	0	0	1	14	0	0	15	0	0	0	0	0	0	17	0	0	17	32
% App. Total	0	0	0	0		6.7	93.3	0	0		0	0	0	0		0	100	0	0		
PHF	.000	.000	.000	.000	.000	.250	.700	.000	.000	.625	.000	.000	.000	.000	.000	.000	.708	.000	.000	.708	.800

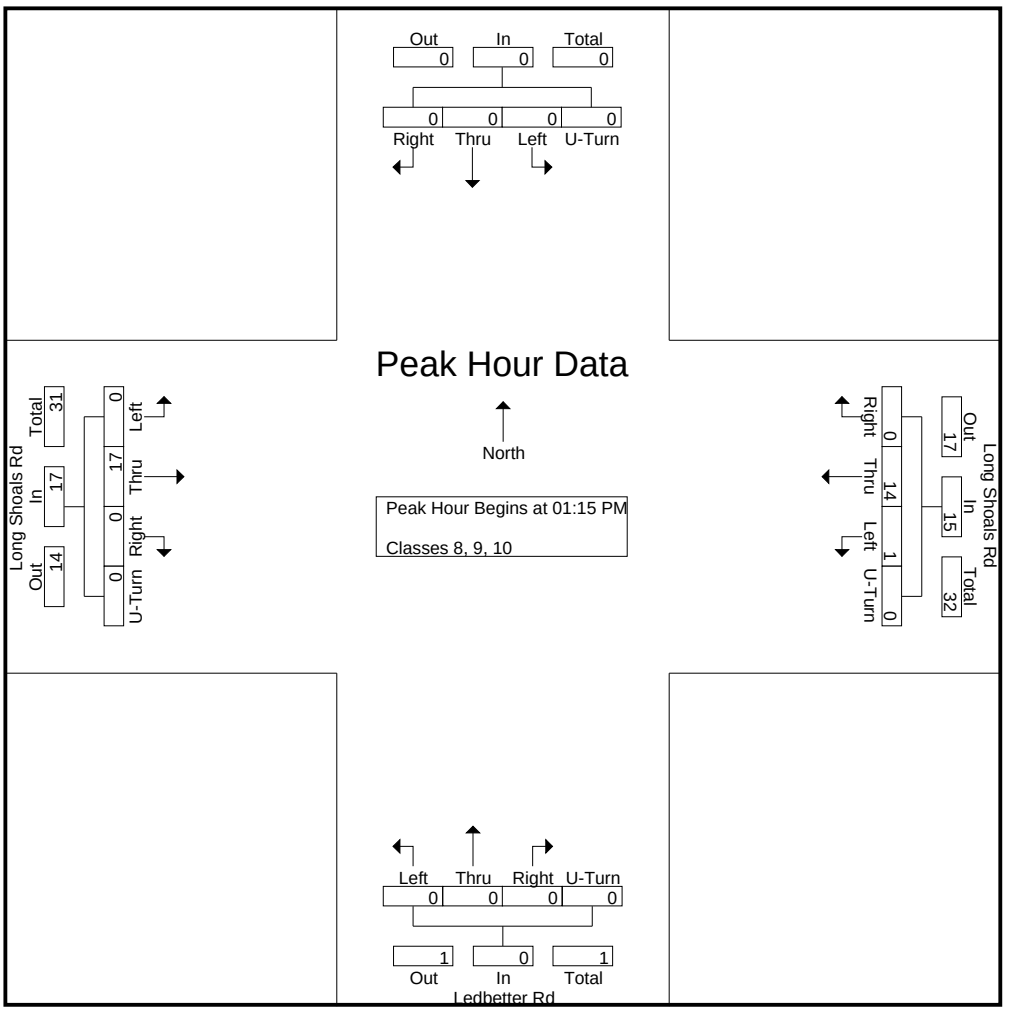

DocuSign Envelope ID: 5C03745C-4B01-4834-A65D-B77F558A4F46

Quality Counts

920 Blairhill Rd, Ste B-106
Charlotte, NC 28217

File Name : 15411716 - Ledbetter Rd -- Long Shoals Rd
Site Code : 15411716
Start Date : 4/20/2021
Page No : 1

Groups Printed- Classes 11, 12, 13

	Southbound					Long Shoals Rd Westbound					Ledbetter Rd Northbound					Long Shoals Rd Eastbound					
Start Time	Left	Thru	Right	U-Turn	App. Total	Left	Thru	Right	U-Turn	App. Total	Left	Thru	Right	U-Turn	App. Total	Left	Thru	Right	U-Turn	App. Total	Int. Total
06:00 AM	0	0	0	0	0	0	0	0	0	0	0	0	0	0	0	0	0	0	0	0	0
06:15 AM	0	0	0	0	0	0	0	0	0	0	0	0	0	0	0	0	0	0	0	0	0
06:30 AM	0	0	0	0	0	0	0	0	0	0	0	0	0	0	0	0	0	0	0	0	0
06:45 AM	0	0	0	0	0	0	0	0	0	0	0	0	0	0	0	0	0	0	0	0	0
Total	0	0	0	0	0	0	0	0	0	0	0	0	0	0	0	0	0	0	0	0	0
07:00 AM	0	0	0	0	0	0	0	0	0	0	0	0	0	0	0	0	0	0	0	0	0
07:15 AM	0	0	0	0	0	0	0	0	0	0	0	0	0	0	0	0	0	0	0	0	0
07:30 AM	0	0	0	0	0	0	0	0	0	0	0	0	0	0	0	0	0	0	0	0	0
07:45 AM	0	0	0	0	0	0	0	0	0	0	0	0	0	0	0	0	0	0	0	0	0
Total	0	0	0	0	0	0	0	0	0	0	0	0	0	0	0	0	0	0	0	0	0
08:00 AM	0	0	0	0	0	0	0	0	0	0	0	0	0	0	0	0	0	0	0	0	0
08:15 AM	0	0	0	0	0	0	0	0	0	0	0	0	0	0	0	0	0	0	0	0	0
08:30 AM	0	0	0	0	0	0	0	0	0	0	0	0	0	0	0	0	0	0	0	0	0
08:45 AM	0	0	0	0	0	0	0	0	0	0	0	0	0	0	0	0	0	0	0	0	0
Total	0	0	0	0	0	0	0	0	0	0	0	0	0	0	0	0	0	0	0	0	0
09:00 AM	0	0	0	0	0	0	0	0	0	0	0	0	0	0	0	0	0	0	0	0	0
09:15 AM	0	0	0	0	0	0	0	0	0	0	0	0	0	0	0	0	0	0	0	0	0
09:30 AM	0	0	0	0	0	0	0	0	0	0	0	0	0	0	0	0	0	0	0	0	0
09:45 AM	0	0	0	0	0	0	0	0	0	0	0	0	0	0	0	0	0	0	0	0	0
Total	0	0	0	0	0	0	0	0	0	0	0	0	0	0	0	0	0	0	0	0	0
10:00 AM	0	0	0	0	0	0	0	0	0	0	0	0	0	0	0	0	0	0	0	0	0
10:15 AM	0	0	0	0	0	0	0	0	0	0	0	0	0	0	0	0	0	0	0	0	0
10:30 AM	0	0	0	0	0	0	0	0	0	0	0	0	0	0	0	0	0	0	0	0	0
10:45 AM	0	0	0	0	0	0	0	0	0	0	0	0	0	0	0	0	0	0	0	0	0
Total	0	0	0	0	0	0	0	0	0	0	0	0	0	0	0	0	0	0	0	0	0
11:00 AM	0	0	0	0	0	0	0	0	0	0	0	0	0	0	0	0	0	0	0	0	0
11:15 AM	0	0	0	0	0	0	0	0	0	0	0	0	0	0	0	0	0	0	0	0	0
11:30 AM	0	0	0	0	0	0	0	0	0	0	0	0	0	0	0	0	0	0	0	0	0
11:45 AM	0	0	0	0	0	0	0	0	0	0	0	0	0	0	0	0	0	0	0	0	0
Total	0	0	0	0	0	0	0	0	0	0	0	0	0	0	0	0	0	0	0	0	0
12:00 PM	0	0	0	0	0	0	0	0	0	0	0	0	0	0	0	0	0	0	0	0	0
12:15 PM	0	0	0	0	0	0	0	0	0	0	0	0	0	0	0	0	0	0	0	0	0
12:30 PM	0	0	0	0	0	0	0	0	0	0	0	0	0	0	0	0	0	0	0	0	0
12:45 PM	0	0	0	0	0	0	0	0	0	0	0	0	0	0	0	0	0	0	0	0	0
Total	0	0	0	0	0	0	0	0	0	0	0	0	0	0	0	0	0	0	0	0	0
01:00 PM	0	0	0	0	0	0	0	0	0	0	0	0	0	0	0	0	0	0	0	0	0
01:15 PM	0	0	0	0	0	0	0	0	0	0	0	0	0	0	0	0	0	0	0	0	0
01:30 PM	0	0	0	0	0	0	0	0	0	0	0	0	0	0	0	0	0	0	0	0	0
01:45 PM	0	0	0	0	0	0	0	0	0	0	0	0	0	0	0	0	0	0	0	0	0
Total	0	0	0	0	0	0	0	0	0	0	0	0	0	0	0	0	0	0	0	0	0
02:00 PM	0	0	0	0	0	0	0	0	0	0	0	0	0	0	0	0	0	0	0	0	0
02:15 PM	0	0	0	0	0	0	0	0	0	0	0	0	0	0	0	0	0	0	0	0	0
02:30 PM	0	0	0	0	0	0	0	0	0	0	0	0	0	0	0	0	0	0	0	0	0
02:45 PM	0	0	0	0	0	0	0	0	0	0	0	0	0	0	0	0	0	0	0	0	0
Total	0	0	0	0	0	0	0	0	0	0	0	0	0	0	0	0	0	0	0	0	0
03:00 PM	0	0	0	0	0	0	0	0	0	0	0	0	0	0	0	0	0	0	0	0	0
03:15 PM	0	0	0	0	0	0	0	0	0	0	0	0	0	0	0	0	0	0	0	0	0
03:30 PM	0	0	0	0	0	0	0	0	0	0	0	0	0	0	0	0	0	0	0	0	0

DocuSign Envelope ID: 5C03745C-4B01-4834-A65D-B77F558A4F46

Quality Counts

920 Blairhill Rd, Ste B-106
Charlotte, NC 28217

File Name : 15411716 - Ledbetter Rd -- Long Shoals Rd
Site Code : 15411716
Start Date : 4/20/2021

Groups Printed- Classes 11, 12, 13

	Southbound					Long Shoals Rd Westbound					Ledbetter Rd Northbound					Long Shoals Rd Eastbound					
Start Time	Left	Thru	Right	U-Turn	App. Total	Left	Thru	Right	U-Turn	App. Total	Left	Thru	Right	U-Turn	App. Total	Left	Thru	Right	U-Turn	App. Total	Int. Total
03:45 PM	0	0	0	0	0	0	0	0	0	0	0	0	0	0	0	0	0	0	0	0	0
Total	0	0	0	0	0	0	0	0	0	0	0	0	0	0	0	0	0	0	0	0	0
04:00 PM	0	0	0	0	0	0	0	0	0	0	0	0	0	0	0	0	0	0	0	0	0
04:15 PM	0	0	0	0	0	0	0	0	0	0	0	0	0	0	0	0	0	0	0	0	0
04:30 PM	0	0	0	0	0	0	0	0	0	0	0	0	0	0	0	0	0	0	0	0	0
04:45 PM	0	0	0	0	0	0	0	0	0	0	0	0	0	0	0	0	0	0	0	0	0
Total	0	0	0	0	0	0	0	0	0	0	0	0	0	0	0	0	0	0	0	0	0
05:00 PM	0	0	0	0	0	0	0	0	0	0	0	0	0	0	0	0	0	0	0	0	0
05:15 PM	0	0	0	0	0	0	0	0	0	0	0	0	0	0	0	0	0	0	0	0	0
05:30 PM	0	0	0	0	0	0	0	0	0	0	0	0	0	0	0	0	0	0	0	0	0
05:45 PM	0	0	0	0	0	0	0	0	0	0	0	0	0	0	0	0	0	0	0	0	0
Total	0	0	0	0	0	0	0	0	0	0	0	0	0	0	0	0	0	0	0	0	0
06:00 PM	0	0	0	0	0	0	0	0	0	0	0	0	0	0	0	0	0	0	0	0	0
06:15 PM	0	0	0	0	0	0	0	0	0	0	0	0	0	0	0	0	0	0	0	0	0
06:30 PM	0	0	0	0	0	0	0	0	0	0	0	0	0	0	0	0	0	0	0	0	0
06:45 PM	0	0	0	0	0	0	0	0	0	0	0	0	0	0	0	0	0	0	0	0	0
Total	0	0	0	0	0	0	0	0	0	0	0	0	0	0	0	0	0	0	0	0	0
Grand Total	0	0	0	0	0	0	0	0	0	0	0	0	0	0	0	0	0	0	0	0	0
Apprch %	0	0	0	0		0	0	0	0		0	0	0	0		0	0	0	0		
Total %																					

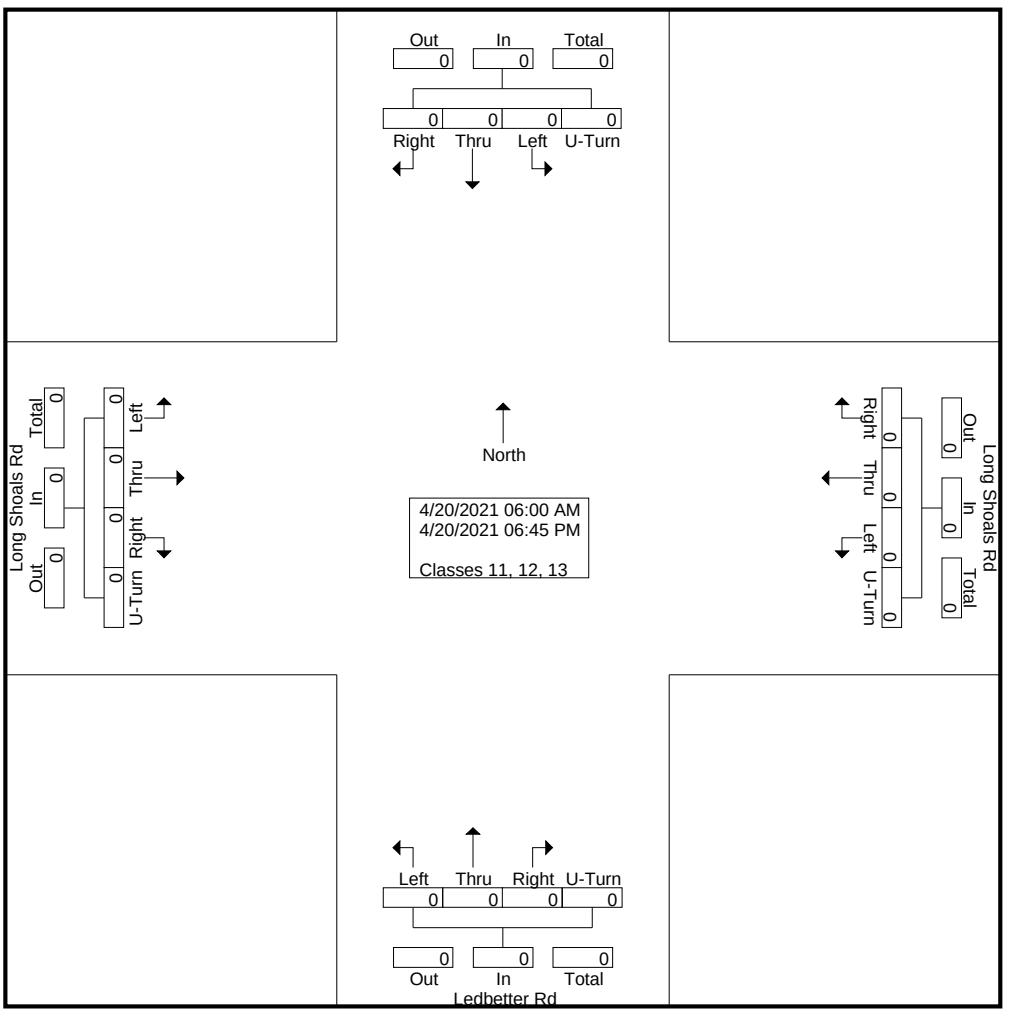

DocuSign Envelope ID: 5C03745C-4B01-4834-A65D-B77F558A4F46

Quality Counts

920 Blairhill Rd, Ste B-106
Charlotte, NC 28217

File Name : 15411716 - Ledbetter Rd -- Long Shoals Rd
Site Code : 15411716
Start Date : 4/20/2021
Page No : 3

	Southbound					Long Shoals Rd Westbound					Ledbetter Rd Northbound					Long Shoals Rd Eastbound					
Start Time	Left	Thru	Right	U-Turn	App. Total	Left	Thru	Right	U-Turn	App. Total	Left	Thru	Right	U-Turn	App. Total	Left	Thru	Right	U-Turn	App. Total	Int. Total
Peak Hour Analysis From 06:00 AM to 11:45 AM - Peak 1 of 1																					
Peak Hour for Entire Intersection Begins at 06:00 AM																					
06:00 AM	0	0	0	0	0	0	0	0	0	0	0	0	0	0	0	0	0	0	0	0	0
06:15 AM	0	0	0	0	0	0	0	0	0	0	0	0	0	0	0	0	0	0	0	0	0
06:30 AM	0	0	0	0	0	0	0	0	0	0	0	0	0	0	0	0	0	0	0	0	0
06:45 AM	0	0	0	0	0	0	0	0	0	0	0	0	0	0	0	0	0	0	0	0	0
Total Volume	0	0	0	0	0	0	0	0	0	0	0	0	0	0	0	0	0	0	0	0	0
% App. Total	0	0	0	0		0	0	0	0		0	0	0	0		0	0	0	0		
PHF	.000	.000	.000	.000	.000	.000	.000	.000	.000	.000	.000	.000	.000	.000	.000	.000	.000	.000	.000	.000	.000

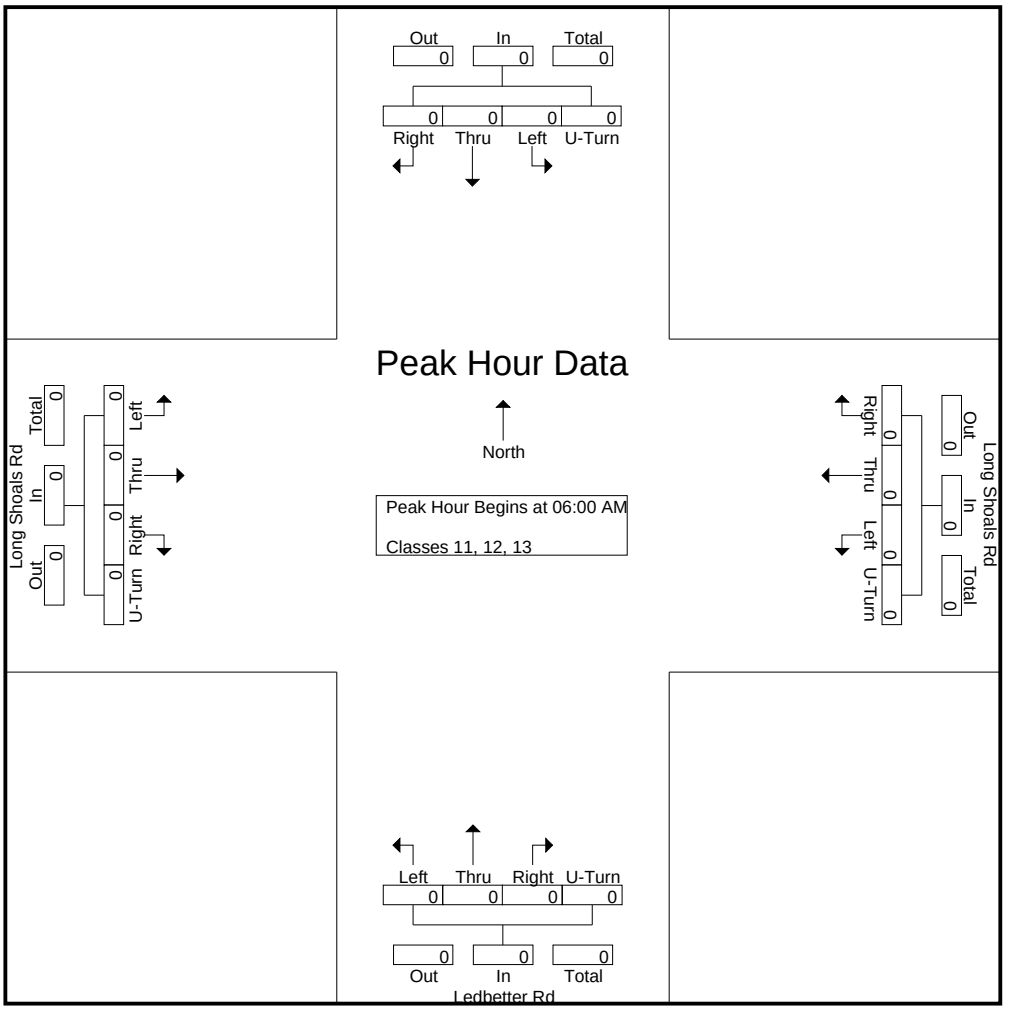

DocuSign Envelope ID: 5C03745C-4B01-4834-A65D-B77F558A4F46

Quality Counts

920 Blairhill Rd, Ste B-106
Charlotte, NC 28217

File Name : 15411716 - Ledbetter Rd -- Long Shoals Rd
Site Code : 15411716
Start Date : 4/20/2021
Page No : 4

	Southbound					Long Shoals Rd Westbound					Ledbetter Rd Northbound					Long Shoals Rd Eastbound					
Start Time	Left	Thru	Right	U-Turn	App. Total	Left	Thru	Right	U-Turn	App. Total	Left	Thru	Right	U-Turn	App. Total	Left	Thru	Right	U-Turn	App. Total	Int. Total
Peak Hour Analysis From 12:00 PM to 06:45 PM - Peak 1 of 1																					
Peak Hour for Entire Intersection Begins at 12:00 PM																					
12:00 PM	0	0	0	0	0	0	0	0	0	0	0	0	0	0	0	0	0	0	0	0	0
12:15 PM	0	0	0	0	0	0	0	0	0	0	0	0	0	0	0	0	0	0	0	0	0
12:30 PM	0	0	0	0	0	0	0	0	0	0	0	0	0	0	0	0	0	0	0	0	0
12:45 PM	0	0	0	0	0	0	0	0	0	0	0	0	0	0	0	0	0	0	0	0	0
Total Volume	0	0	0	0	0	0	0	0	0	0	0	0	0	0	0	0	0	0	0	0	0
% App. Total	0	0	0	0		0	0	0	0		0	0	0	0		0	0	0	0		
PHF	.000	.000	.000	.000	.000	.000	.000	.000	.000	.000	.000	.000	.000	.000	.000	.000	.000	.000	.000	.000	.000

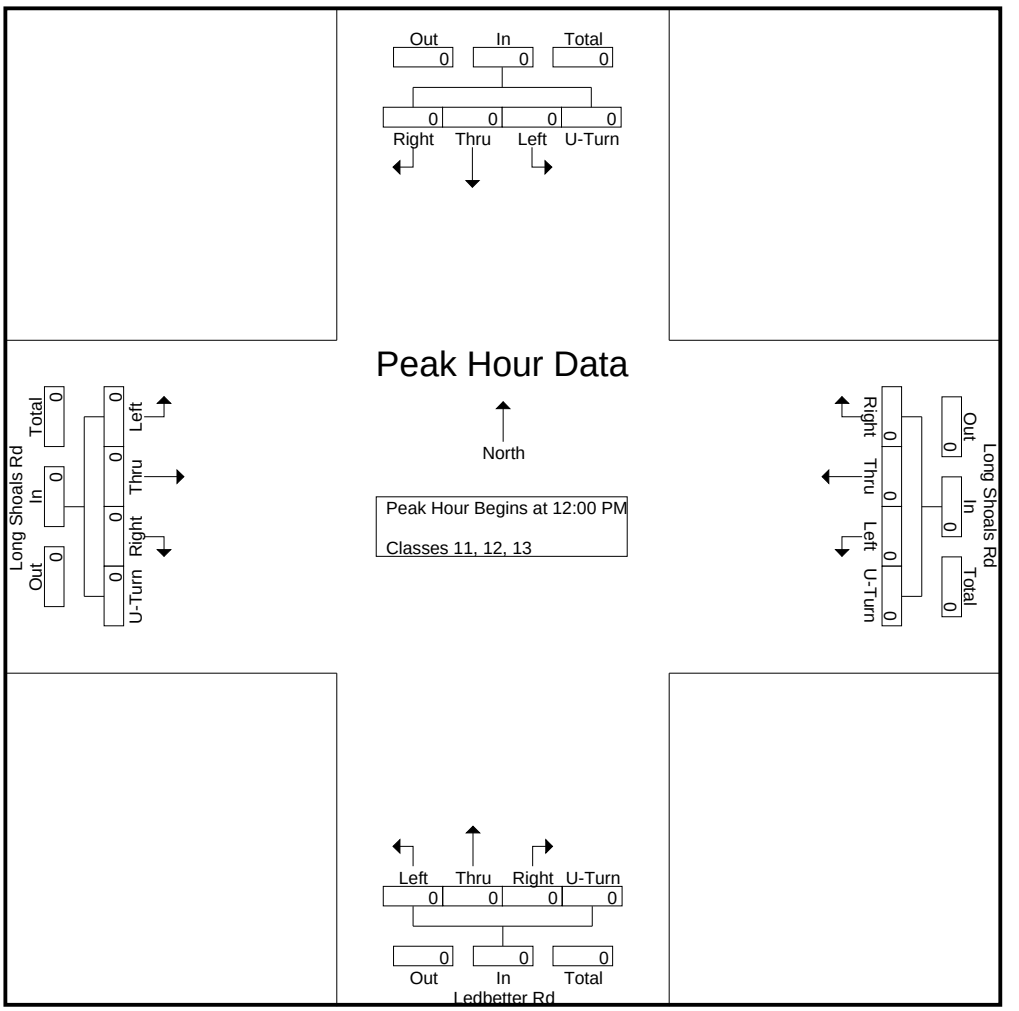

DocuSign Envelope ID: 5C03745C-4B01-4834-A65D-B77F558A4F46

Quality Counts

920 Blairhill Rd, Ste B-106
Charlotte, NC 28217

File Name : 15411716 - Ledbetter Rd -- Long Shoals Rd
Site Code : 15411716
Start Date : 4/20/2021
Page No : 1

Groups Printed- Bikes, Peds

	Southbound					Long Shoals Rd Westbound					Ledbetter Rd Northbound					Long Shoals Rd Eastbound					
Start Time	Left	Thru	Right	Peds	App. Total	Left	Thru	Right	Peds	App. Total	Left	Thru	Right	Peds	App. Total	Left	Thru	Right	Peds	App. Total	Int. Total
06:00 AM	0	0	0	0	0	0	0	0	0	0	0	0	0	0	0	0	0	0	0	0	0
06:15 AM	0	0	0	0	0	0	0	0	0	0	0	0	0	0	0	0	0	0	0	0	0
06:30 AM	0	0	0	0	0	0	0	0	0	0	0	0	0	0	0	0	0	0	0	0	0
06:45 AM	0	0	0	0	0	0	0	0	0	0	0	0	0	0	0	0	0	0	0	0	0
Total	0	0	0	0	0	0	0	0	0	0	0	0	0	0	0	0	0	0	0	0	0
07:00 AM	0	0	0	0	0	0	0	0	0	0	0	0	0	0	0	0	0	0	0	0	0
07:15 AM	0	0	0	0	0	0	0	0	0	0	0	0	0	0	0	0	0	0	0	0	0
07:30 AM	0	0	0	0	0	0	0	0	0	0	0	0	0	0	0	0	0	0	0	0	0
07:45 AM	0	0	0	0	0	0	0	0	0	0	0	0	0	0	0	0	0	0	0	0	0
Total	0	0	0	0	0	0	0	0	0	0	0	0	0	0	0	0	0	0	0	0	0
08:00 AM	0	0	0	0	0	0	0	0	0	0	0	0	0	0	0	0	0	0	0	0	0
08:15 AM	0	0	0	0	0	0	0	0	0	0	0	0	0	0	0	0	0	0	0	0	0
08:30 AM	0	0	0	0	0	0	0	0	0	0	0	0	0	0	0	0	0	0	0	0	0
08:45 AM	0	0	0	0	0	0	0	0	0	0	0	0	0	0	0	0	0	0	0	0	0
Total	0	0	0	0	0	0	0	0	0	0	0	0	0	0	0	0	0	0	0	0	0
09:00 AM	0	0	0	0	0	0	0	0	0	0	0	0	0	0	0	0	0	0	0	0	0
09:15 AM	0	0	0	0	0	0	0	0	0	0	0	0	0	0	0	0	0	0	0	0	0
09:30 AM	0	0	0	0	0	0	0	0	0	0	0	0	0	0	0	0	0	0	0	0	0
09:45 AM	0	0	0	0	0	0	0	0	0	0	0	0	0	0	0	0	0	0	0	0	0
Total	0	0	0	0	0	0	0	0	0	0	0	0	0	0	0	0	0	0	0	0	0
10:00 AM	0	0	0	0	0	0	0	0	0	0	0	0	0	0	0	0	0	0	0	0	0
10:15 AM	0	0	0	0	0	0	0	0	0	0	0	0	0	0	0	0	0	0	0	0	0
10:30 AM	0	0	0	0	0	0	0	0	0	0	0	0	0	0	0	0	0	2	0	2	2
10:45 AM	0	0	0	0	0	0	0	0	0	0	0	0	0	0	0	0	0	0	0	0	0
Total	0	0	0	0	0	0	0	0	0	0	0	0	0	0	0	0	0	2	0	2	2
11:00 AM	0	0	0	0	0	0	0	0	0	0	0	0	0	0	0	0	0	0	0	0	0
11:15 AM	0	0	0	0	0	0	0	0	0	0	0	0	0	0	0	0	0	0	0	0	0
11:30 AM	0	0	0	0	0	0	0	0	0	0	0	0	0	0	0	0	0	0	0	0	0
11:45 AM	0	0	0	0	0	0	0	0	0	0	0	0	0	0	0	0	0	0	0	0	0
Total	0	0	0	0	0	0	0	0	0	0	0	0	0	0	0	0	0	0	0	0	0
12:00 PM	0	0	0	0	0	0	0	0	0	0	0	0	1	0	1	0	0	0	0	0	1
12:15 PM	0	0	0	0	0	0	0	0	0	0	0	0	0	0	0	0	0	0	0	0	0
12:30 PM	0	0	0	0	0	0	0	0	0	0	0	0	1	0	1	0	0	0	0	0	1
12:45 PM	0	0	0	0	0	0	0	0	0	0	0	0	0	0	0	0	0	0	0	0	0
Total	0	0	0	0	0	0	0	0	0	0	0	0	2	0	2	0	0	0	0	0	2
01:00 PM	0	0	0	0	0	0	0	0	0	0	0	0	0	0	0	0	0	0	0	0	0
01:15 PM	0	0	0	0	0	0	0	0	0	0	0	0	0	0	0	0	0	0	0	0	0
01:30 PM	0	0	0	0	0	0	0	0	0	0	0	0	0	0	0	0	0	0	0	0	0
01:45 PM	0	0	0	0	0	0	0	0	0	0	0	0	0	0	0	0	0	0	0	0	0
Total	0	0	0	0	0	0	0	0	0	0	0	0	0	0	0	0	0	0	0	0	0
02:00 PM	0	0	0	0	0	0	0	0	0	0	0	0	0	0	0	0	0	0	0	0	0
02:15 PM	0	0	0	0	0	1	0	0	0	1	0	0	0	0	0	0	0	0	0	0	1
02:30 PM	0	0	0	0	0	0	0	0	0	0	0	0	0	0	0	0	0	0	0	0	0
02:45 PM	0	0	0	0	0	0	0	0	0	0	0	0	0	0	0	0	0	0	0	0	0
Total	0	0	0	0	0	1	0	0	0	1	0	0	0	0	0	0	0	0	0	0	1
03:00 PM	0	0	0	0	0	0	0	0	0	0	0	0	0	0	0	0	0	0	0	0	0
03:15 PM	0	0	0	0	0	0	0	0	0	0	0	0	0	0	0	0	0	0	0	0	0
03:30 PM	0	0	0	0	0	0	0	0	0	0	0	0	0	0	0	0	0	0	0	0	0

DocuSign Envelope ID: 5C03745C-4B01-4834-A65D-B77F558A4F46

Quality Counts

920 Blairhill Rd, Ste B-106
Charlotte, NC 28217

File Name : 15411716 - Ledbetter Rd -- Long Shoals Rd
Site Code : 15411716
Start Date : 4/20/2021

Groups Printed- Bikes, Peds

	Southbound					Long Shoals Rd Westbound					Ledbetter Rd Northbound					Long Shoals Rd Eastbound					
Start Time	Left	Thru	Right	Peds	App. Total	Left	Thru	Right	Peds	App. Total	Left	Thru	Right	Peds	App. Total	Left	Thru	Right	Peds	App. Total	Int. Total
03:45 PM	0	0	0	0	0	0	0	0	0	0	0	0	0	0	0	0	0	0	0	0	0
Total	0	0	0	0	0	0	0	0	0	0	0	0	0	0	0	0	0	0	0	0	0
04:00 PM	0	0	0	0	0	0	0	0	0	0	0	0	0	0	0	0	0	0	0	0	0
04:15 PM	0	0	0	0	0	0	0	0	0	0	0	0	0	0	0	0	0	0	0	0	0
04:30 PM	0	0	0	0	0	0	0	0	0	0	0	0	0	0	0	0	0	0	0	0	0
04:45 PM	0	0	0	0	0	0	0	0	0	0	0	0	0	0	0	0	0	0	0	0	0
Total	0	0	0	0	0	0	0	0	0	0	0	0	0	0	0	0	0	0	0	0	0
05:00 PM	0	0	0	0	0	0	0	0	0	0	0	0	0	0	0	0	0	0	0	0	0
05:15 PM	0	0	0	0	0	0	0	0	0	0	0	0	0	0	0	0	0	0	0	0	0
05:30 PM	0	0	0	0	0	0	0	0	0	0	0	0	0	0	0	0	0	0	0	0	0
05:45 PM	0	0	0	0	0	0	0	0	0	0	0	0	0	0	0	0	0	0	0	0	0
Total	0	0	0	0	0	0	0	0	0	0	0	0	0	0	0	0	0	0	0	0	0
06:00 PM	0	0	0	0	0	0	0	0	0	0	0	0	0	0	0	0	0	0	0	0	0
06:15 PM	0	0	0	0	0	0	0	0	0	0	0	0	0	0	0	0	0	0	0	0	0
06:30 PM	0	0	0	0	0	0	0	0	0	0	0	0	0	0	0	0	0	0	0	0	0
06:45 PM	0	0	0	0	0	0	0	0	0	0	0	0	0	0	0	0	0	0	0	0	0
Total	0	0	0	0	0	0	0	0	0	0	0	0	0	0	0	0	0	0	0	0	0
Grand Total	0	0	0	0	0	1	0	0	0	1	0	0	2	0	2	0	0	2	0	2	5
Apprch %	0	0	0	0		100	0	0	0		0	0	100	0		0	0	100	0		
Total %	0	0	0	0	0	20	0	0	0	20	0	0	40	0	40	0	0	40	0	40	

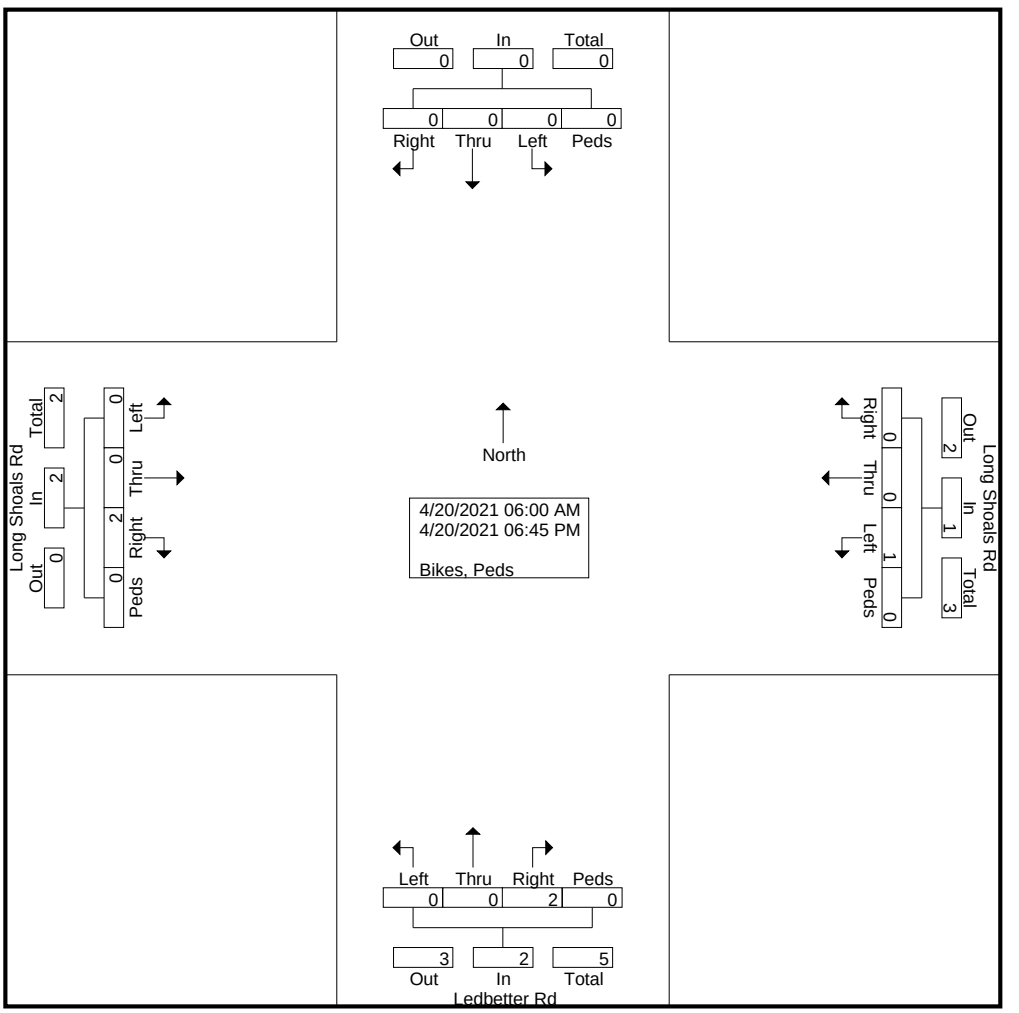

DocuSign Envelope ID: 5C03745C-4B01-4834-A65D-B77F558A4F46

Quality Counts

920 Blairhill Rd, Ste B-106
Charlotte, NC 28217

File Name : 15411716 - Ledbetter Rd -- Long Shoals Rd
Site Code : 15411716
Start Date : 4/20/2021
Page No : 3

	Southbound					Long Shoals Rd Westbound					Ledbetter Rd Northbound					Long Shoals Rd Eastbound					
Start Time	Left	Thru	Right	Peds	App. Total	Left	Thru	Right	Peds	App. Total	Left	Thru	Right	Peds	App. Total	Left	Thru	Right	Peds	App. Total	Int. Total
Peak Hour Analysis From 06:00 AM to 11:45 AM - Peak 1 of 1																					
Peak Hour for Entire Intersection Begins at 09:45 AM																					
09:45 AM	0	0	0	0	0	0	0	0	0	0	0	0	0	0	0	0	0	0	0	0	0
10:00 AM	0	0	0	0	0	0	0	0	0	0	0	0	0	0	0	0	0	0	0	0	0
10:15 AM	0	0	0	0	0	0	0	0	0	0	0	0	0	0	0	0	0	0	0	0	0
10:30 AM	0	0	0	0	0	0	0	0	0	0	0	0	0	0	0	0	0	**2**	0	**2**	**2**
Total Volume	0	0	0	0	0	0	0	0	0	0	0	0	0	0	0	0	0	2	0	2	2
% App. Total	0	0	0	0		0	0	0	0		0	0	0	0		0	0	100	0		
PHF	.000	.000	.000	.000	.000	.000	.000	.000	.000	.000	.000	.000	.000	.000	.000	.000	.000	.250	.000	.250	.250

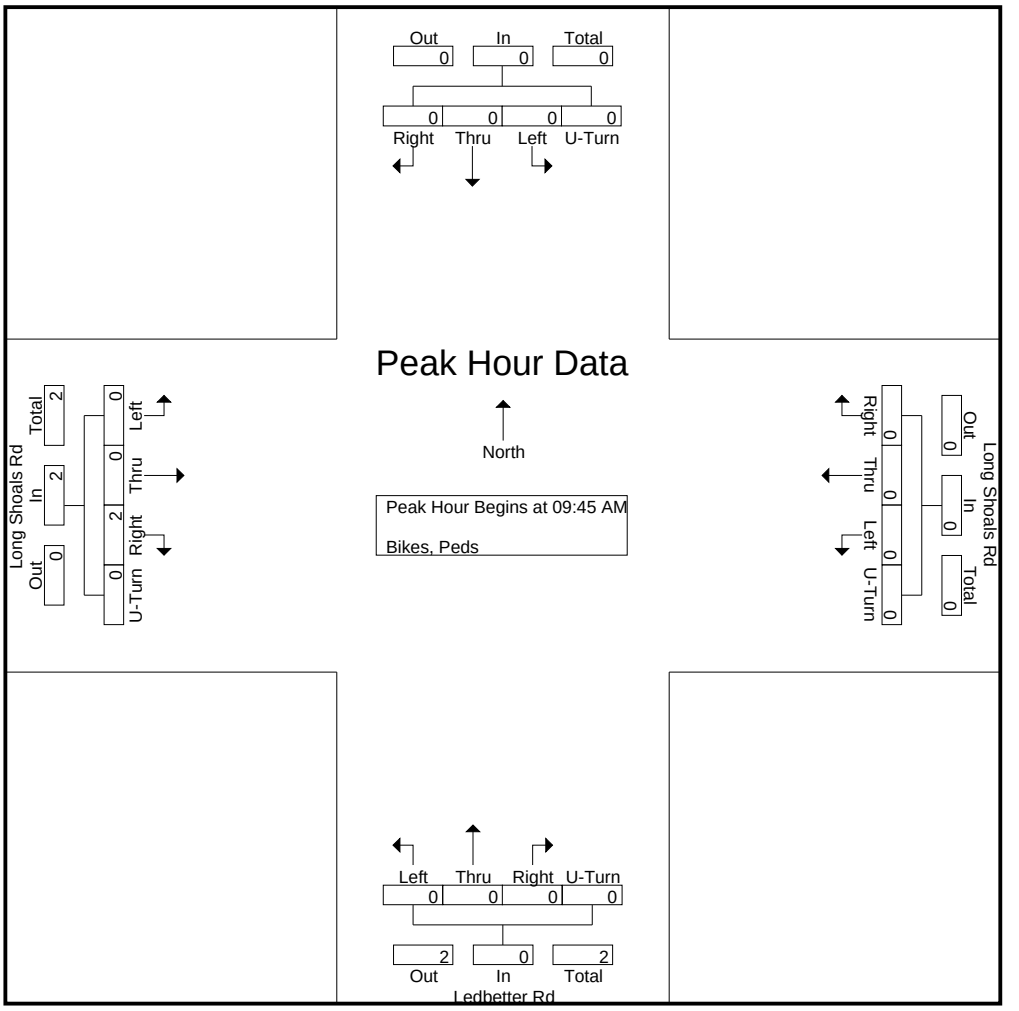

DocuSign Envelope ID: 5C03745C-4B01-4834-A65D-B77F558A4F46

Quality Counts

920 Blairhill Rd, Ste B-106
Charlotte, NC 28217

File Name : 15411716 - Ledbetter Rd -- Long Shoals Rd
Site Code : 15411716
Start Date : 4/20/2021
Page No : 4

	Southbound					Long Shoals Rd Westbound					Ledbetter Rd Northbound					Long Shoals Rd Eastbound					
Start Time	Left	Thru	Right	Peds	App. Total	Left	Thru	Right	Peds	App. Total	Left	Thru	Right	Peds	App. Total	Left	Thru	Right	Peds	App. Total	Int. Total
Peak Hour Analysis From 12:00 PM to 06:45 PM - Peak 1 of 1																					
Peak Hour for Entire Intersection Begins at 12:00 PM																					
12:00 PM	0	0	0	0	0	0	0	0	0	0	0	0	**1**	0	**1**	0	0	0	0	0	**1**
12:15 PM	0	0	0	0	0	0	0	0	0	0	0	0	0	0	0	0	0	0	0	0	0
12:30 PM	0	0	0	0	0	0	0	0	0	0	0	0	1	0	1	0	0	0	0	0	1
12:45 PM	0	0	0	0	0	0	0	0	0	0	0	0	0	0	0	0	0	0	0	0	0
Total Volume	0	0	0	0	0	0	0	0	0	0	0	0	2	0	2	0	0	0	0	0	2
% App. Total	0	0	0	0		0	0	0	0		0	0	100	0		0	0	0	0		
PHF	.000	.000	.000	.000	.000	.000	.000	.000	.000	.000	.000	.000	.500	.000	.500	.000	.000	.000	.000	.000	.500

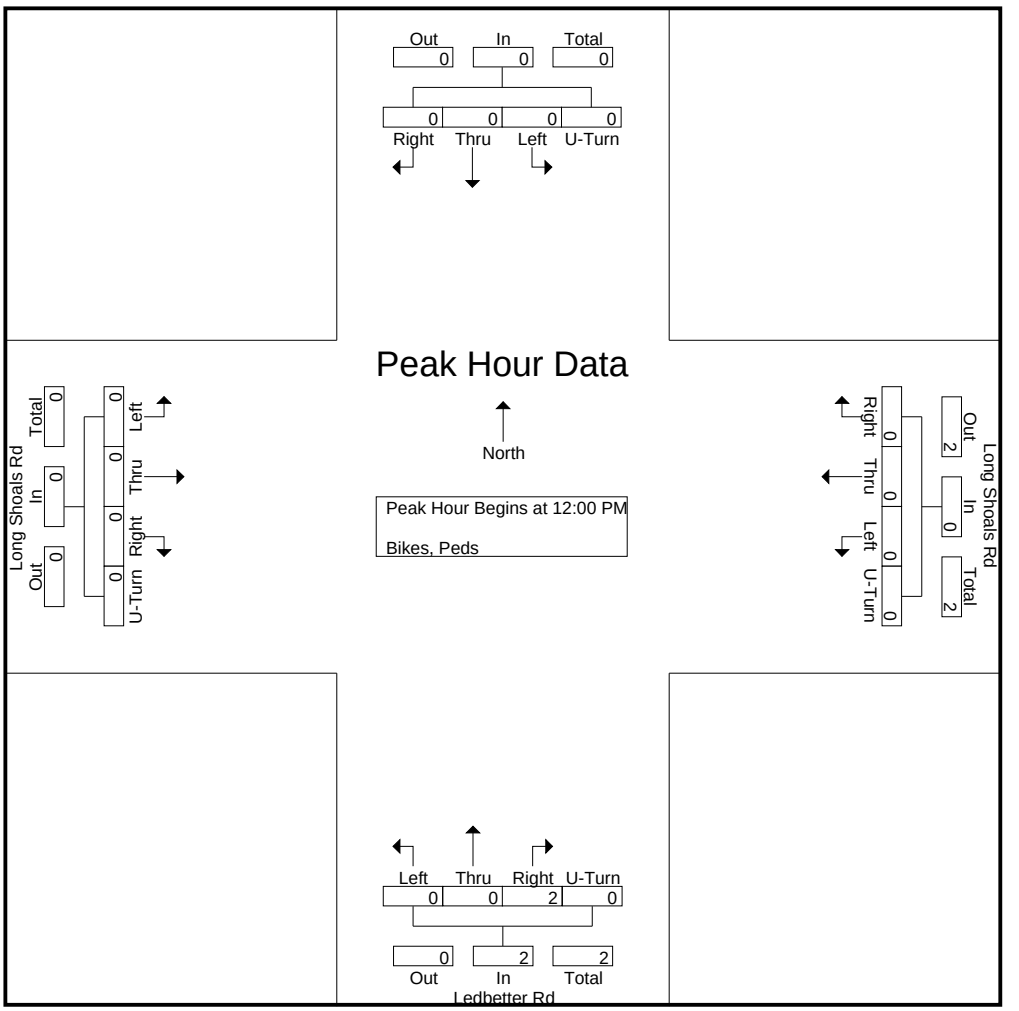

DocuSign Envelope ID: 5C03745C-4B01-4834-A65D-B77F558A4F46

QUALITY COUNTS LLC
920 Blairhill Rd, Suite 106, Charlotte, NC 28217
704.215.4616

Count Number: 15411717
County: Buncombe
City: Arden
Division: 13

Location: Skyland Inn Dr/Schenck Pkwy & Long Shoals Rd
General Location Type: Intersection
Count Type: Turning Movement (Classification)
Count Start Date: 4/20/2021
Time: 6:00 AM – 7:00 PM
Volume: 35,580

Maximum Temperature: 69° F
Minimum Temperature: 40° F
Precipitation: 0.00 in
Snowfall: 0.0 in
Average Sky Cover: 0.2
Weather Conditions: Clear

1. **School in Session:** Yes
2. **Pedestrians Counted**: Yes
3. **Disabled Pedestrians Present**: No
   Description and Approaches Used: N/A
4. **Counted By**: Chrissy Lewis
5. **Data Processor**: Jon B
6. **Signal Inventory**: N/A
7. **Data Collection Method**: Video/Count Board
8. **Equipment Operating Properly**: Yes
9. **Area Lighting Present**: Yes
10. **Nearest Roadway Stop Sign < 300 ft:** No
    If yes, list approaches: N/A
11. **Nearest Traffic Signal < 300 ft:** No
    If yes, list approaches: N/A
12. **At-Grade Railroad Crossing Present (<200 ft):** No
    If yes, list approaches & distance: N/A
13. **Other:**

↑ North

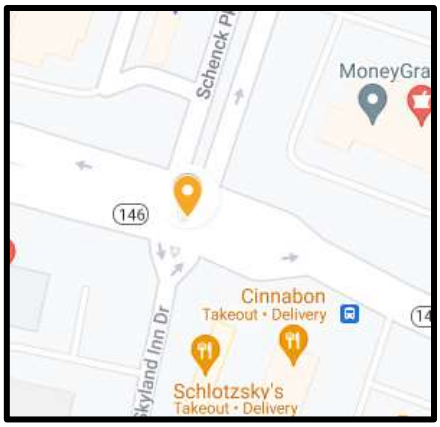

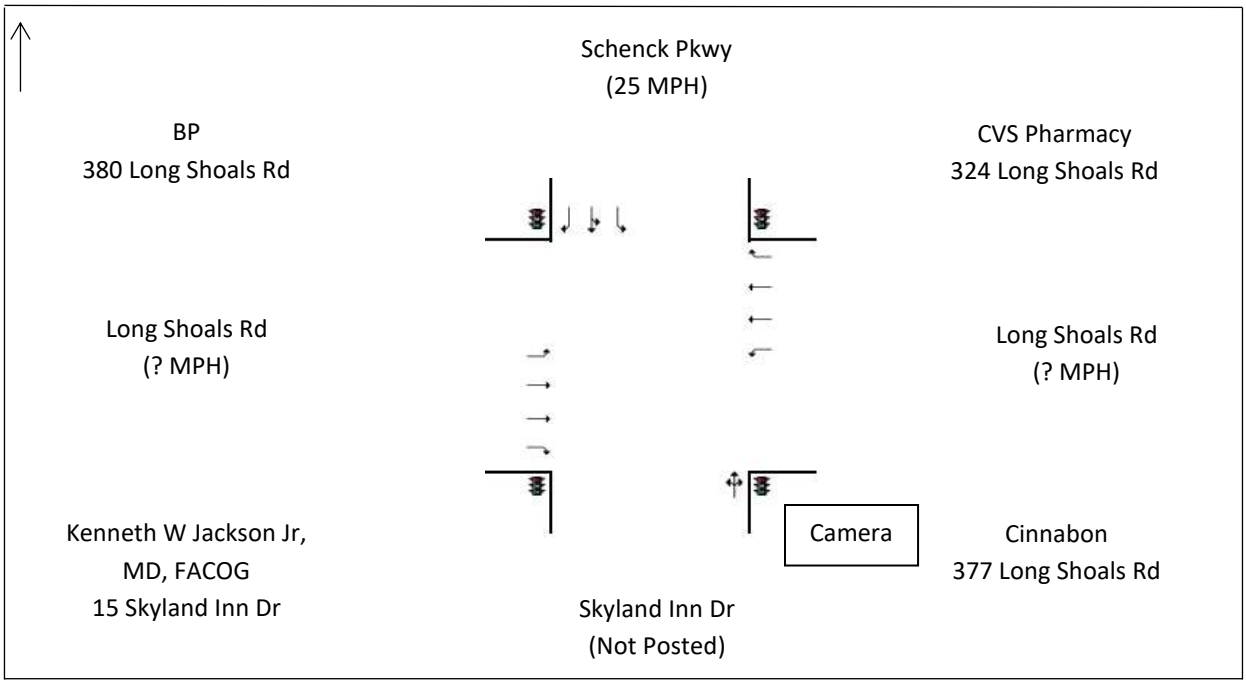

DocuSign Envelope ID: 5C03745C-4B01-4834-A65D-B77F558A4F46

Quality Counts

920 Blairhill Rd, Ste B-106
Charlotte, NC 28217

File Name : 15411717 - Skyland Inn Dr_Schenck Pkwy -- Long Shoals Rd
Site Code : 15411717
Start Date : 4/20/2021
Page No : 1

Groups Printed- Classes 1, 2, 3 - Classes 4, 5, 6, 7 - Classes 8, 9, 10 - Classes 11, 12, 13

	Schenck Pkwy Southbound					Long Shoals Rd Westbound					Skyland Inn Dr Northbound					Long Shoals Rd Eastbound					
Start Time	Left	Thru	Right	U-Turn	App. Total	Left	Thru	Right	U-Turn	App. Total	Left	Thru	Right	U-Turn	App. Total	Left	Thru	Right	U-Turn	App. Total	Int. Total
06:00 AM	4	0	15	0	19	4	42	8	0	54	1	0	2	0	3	18	80	5	0	103	179
06:15 AM	10	1	26	0	37	0	71	22	0	93	3	0	2	0	5	24	101	3	0	128	263
06:30 AM	8	0	30	0	38	0	91	23	0	114	1	1	3	0	5	42	145	12	0	199	356
06:45 AM	10	0	31	0	41	2	101	22	0	125	9	1	0	0	10	56	192	22	0	270	446
Total	32	1	102	0	135	6	305	75	0	386	14	2	7	0	23	140	518	42	0	700	1244
07:00 AM	21	2	53	0	76	5	112	32	0	149	13	1	1	0	15	53	227	23	1	304	544
07:15 AM	31	1	62	0	94	5	189	47	0	241	7	3	1	0	11	73	331	29	1	434	780
07:30 AM	42	0	75	0	117	3	244	59	0	306	4	2	1	0	7	95	357	24	0	476	906
07:45 AM	37	4	70	0	111	4	216	59	0	279	9	4	0	0	13	94	423	43	0	560	963
Total	131	7	260	0	398	17	761	197	0	975	33	10	3	0	46	315	1338	119	2	1774	3193
08:00 AM	25	1	64	0	90	6	173	49	0	228	18	2	3	0	23	99	311	24	1	435	776
08:15 AM	25	1	59	1	86	4	173	51	0	228	12	2	4	0	18	88	264	19	0	371	703
08:30 AM	41	5	64	0	110	6	141	49	0	196	14	3	3	0	20	86	213	19	0	318	644
08:45 AM	17	0	64	0	81	5	170	65	0	240	7	1	3	0	11	99	246	22	1	368	700
Total	108	7	251	1	367	21	657	214	0	892	51	8	13	0	72	372	1034	84	2	1492	2823
09:00 AM	32	0	68	0	100	5	136	54	0	195	14	4	1	0	19	71	172	21	0	264	578
09:15 AM	25	2	65	0	92	5	153	37	0	195	13	3	3	0	19	78	188	24	1	291	597
09:30 AM	33	0	68	0	101	6	127	44	0	177	7	0	5	0	12	80	191	10	0	281	571
09:45 AM	39	1	68	0	108	5	138	54	0	197	14	4	4	0	22	84	194	19	0	297	624
Total	129	3	269	0	401	21	554	189	0	764	48	11	13	0	72	313	745	74	1	1133	2370
10:00 AM	32	3	69	0	104	2	162	41	0	205	10	3	3	0	16	71	151	14	1	237	562
10:15 AM	30	3	71	0	104	5	137	40	0	182	12	3	4	0	19	72	172	16	0	260	565
10:30 AM	48	0	61	0	109	2	167	34	0	203	6	1	9	0	16	78	169	15	0	262	590
10:45 AM	46	2	56	0	104	3	149	36	0	188	11	3	3	0	17	85	183	17	1	286	595
Total	156	8	257	0	421	12	615	151	0	778	39	10	19	0	68	306	675	62	2	1045	2312
11:00 AM	41	1	83	0	125	4	159	49	0	212	10	3	6	0	19	59	158	15	1	233	589
11:15 AM	41	1	80	0	122	1	173	45	0	219	11	2	4	0	17	72	193	13	0	278	636
11:30 AM	54	2	85	0	141	0	161	60	0	221	19	2	2	0	23	56	205	17	0	278	663
11:45 AM	40	5	84	0	129	8	171	53	0	232	17	4	3	0	24	105	200	12	0	317	702
Total	176	9	332	0	517	13	664	207	0	884	57	11	15	0	83	292	756	57	1	1106	2590
12:00 PM	57	2	100	0	159	2	162	63	0	227	20	4	6	0	30	88	223	25	1	337	753
12:15 PM	44	3	84	0	131	4	190	60	0	254	15	3	6	0	24	93	225	15	0	333	742
12:30 PM	53	3	83	0	139	5	189	74	0	268	12	2	8	0	22	85	216	15	0	316	745
12:45 PM	58	8	112	0	178	2	180	76	0	258	17	7	5	0	29	76	190	23	0	289	754
Total	212	16	379	0	607	13	721	273	0	1007	64	16	25	0	105	342	854	78	1	1275	2994
01:00 PM	62	3	91	0	156	8	206	39	0	253	24	1	6	0	31	93	197	19	0	309	749
01:15 PM	68	4	86	0	158	6	182	57	0	245	20	7	1	0	28	97	212	28	0	337	768
01:30 PM	42	1	83	0	126	4	207	58	0	269	15	4	4	0	23	76	194	21	1	292	710
01:45 PM	48	3	80	0	131	6	191	49	0	246	15	6	3	0	24	75	235	18	0	328	729
Total	220	11	340	0	571	24	786	203	0	1013	74	18	14	0	106	341	838	86	1	1266	2956
02:00 PM	44	2	107	0	153	5	158	49	0	212	16	0	8	0	24	67	217	17	0	301	690
02:15 PM	44	1	78	0	123	2	196	40	0	238	17	4	5	0	26	51	232	9	0	292	679
02:30 PM	52	1	91	0	144	3	194	49	0	246	17	2	4	0	23	65	275	15	1	356	769
02:45 PM	44	0	69	0	113	6	228	46	0	280	21	4	5	0	30	63	259	10	0	332	755
Total	184	4	345	0	533	16	776	184	0	976	71	10	22	0	103	246	983	51	1	1281	2893
03:00 PM	53	2	84	0	139	0	245	53	0	298	15	4	6	0	25	64	254	15	0	333	795
03:15 PM	37	1	94	0	132	3	298	41	0	342	14	3	2	0	19	70	245	16	0	331	824
03:30 PM	50	0	99	0	149	6	235	59	0	300	11	2	7	0	20	73	216	12	0	301	770

DocuSign Envelope ID: 5C03745C-4B01-4834-A65D-B77F558A4F46

Quality Counts

920 Blairhill Rd, Ste B-106
Charlotte, NC 28217

File Name : 15411717 - Skyland Inn Dr_Schenck Pkwy -- Long Shoals Rd
Site Code : 15411717
Start Date : 4/20/2021

Groups Printed- Classes 1, 2, 3 - Classes 4, 5, 6, 7 - Classes 8, 9, 10 - Classes 11, 12, 13

	Schenck Pkwy Southbound					Long Shoals Rd Westbound					Skyland Inn Dr Northbound					Long Shoals Rd Eastbound					
Start Time	Left	Thru	Right	U-Turn	App. Total	Left	Thru	Right	U-Turn	App. Total	Left	Thru	Right	U-Turn	App. Total	Left	Thru	Right	U-Turn	App. Total	Int. Total
03:45 PM	45	0	68	0	113	1	289	47	0	337	15	4	5	0	24	88	273	14	0	375	849
Total	185	3	345	0	533	10	1067	200	0	1277	55	13	20	0	88	295	988	57	0	1340	3238
04:00 PM	68	1	105	0	174	2	246	41	0	289	18	1	5	0	24	65	227	18	0	310	797
04:15 PM	43	4	73	0	120	0	271	53	0	324	13	4	3	0	20	58	293	10	0	361	825
04:30 PM	53	3	99	0	155	5	249	56	0	310	14	2	9	0	25	60	236	14	1	311	801
04:45 PM	48	0	82	0	130	2	266	54	0	322	14	0	5	0	19	65	244	16	1	326	797
Total	212	8	359	0	579	9	1032	204	0	1245	59	7	22	0	88	248	1000	58	2	1308	3220
05:00 PM	56	2	117	0	175	2	231	50	0	283	22	1	4	0	27	55	228	7	0	290	775
05:15 PM	54	3	86	0	143	2	305	56	0	363	29	2	1	0	32	74	277	21	0	372	910
05:30 PM	53	0	81	0	134	0	268	54	0	322	23	3	2	0	28	78	209	20	0	307	791
05:45 PM	40	0	87	0	127	1	278	48	0	327	15	2	2	0	19	75	233	18	0	326	799
Total	203	5	371	0	579	5	1082	208	0	1295	89	8	9	0	106	282	947	66	0	1295	3275
06:00 PM	46	4	109	0	159	1	238	58	0	297	5	4	5	0	14	65	189	11	0	265	735
06:15 PM	46	1	64	0	111	4	216	46	0	266	5	2	1	0	8	60	174	11	1	246	631
06:30 PM	38	1	56	0	95	2	180	38	0	220	19	0	2	0	21	56	144	9	1	210	546
06:45 PM	46	2	73	0	121	1	162	37	0	200	16	1	2	0	19	51	160	8	1	220	560
Total	176	8	302	0	486	8	796	179	0	983	45	7	10	0	62	232	667	39	3	941	2472
Grand Total	2124	90	3912	1	6127	175	9816	2484	0	12475	699	131	192	0	1022	3724	11343	873	16	15956	35580
Apprch %	34.7	1.5	63.8	0		1.4	78.7	19.9	0		68.4	12.8	18.8	0		23.3	71.1	5.5	0.1		
Total %	6	0.3	11	0	17.2	0.5	27.6	7	0	35.1	2	0.4	0.5	0	2.9	10.5	31.9	2.5	0	44.8	
Classes 1, 2, 3	2079	89	3618	1	5787	164	9419	2425	0	12008	667	123	180	0	970	3454	10919	840	16	15229	33994
% Classes 1, 2, 3	97.9	98.9	92.5	100	94.5	93.7	96	97.6	0	96.3	95.4	93.9	93.8	0	94.9	92.7	96.3	96.2	100	95.4	95.5
Classes 4, 5, 6, 7	40	1	280	0	321	11	302	54	0	367	26	8	11	0	45	262	322	27	0	611	1344
% Classes 4, 5, 6, 7	1.9	1.1	7.2	0	5.2	6.3	3.1	2.2	0	2.9	3.7	6.1	5.7	0	4.4	7	2.8	3.1	0	3.8	3.8
Classes 8, 9, 10	5	0	14	0	19	0	93	5	0	98	6	0	1	0	7	8	98	6	0	112	236
% Classes 8, 9, 10	0.2	0	0.4	0	0.3	0	0.9	0.2	0	0.8	0.9	0	0.5	0	0.7	0.2	0.9	0.7	0	0.7	0.7
Classes 11, 12, 13	0	0	0	0	0	0	2	0	0	2	0	0	0	0	0	0	4	0	0	4	6
% Classes 11, 12, 13	0	0	0	0	0	0	0	0	0	0	0	0	0	0	0	0	0	0	0	0	0

DocuSign Envelope ID: 5C03745C-4B01-4834-A65D-B77F558A4F46

Quality Counts

920 Blairhill Rd, Ste B-106
Charlotte, NC 28217

File Name : 15411717 - Skyland Inn Dr_Schenck Pkwy -- Long Shoals Rd
Site Code : 15411717
Start Date : 4/20/2021

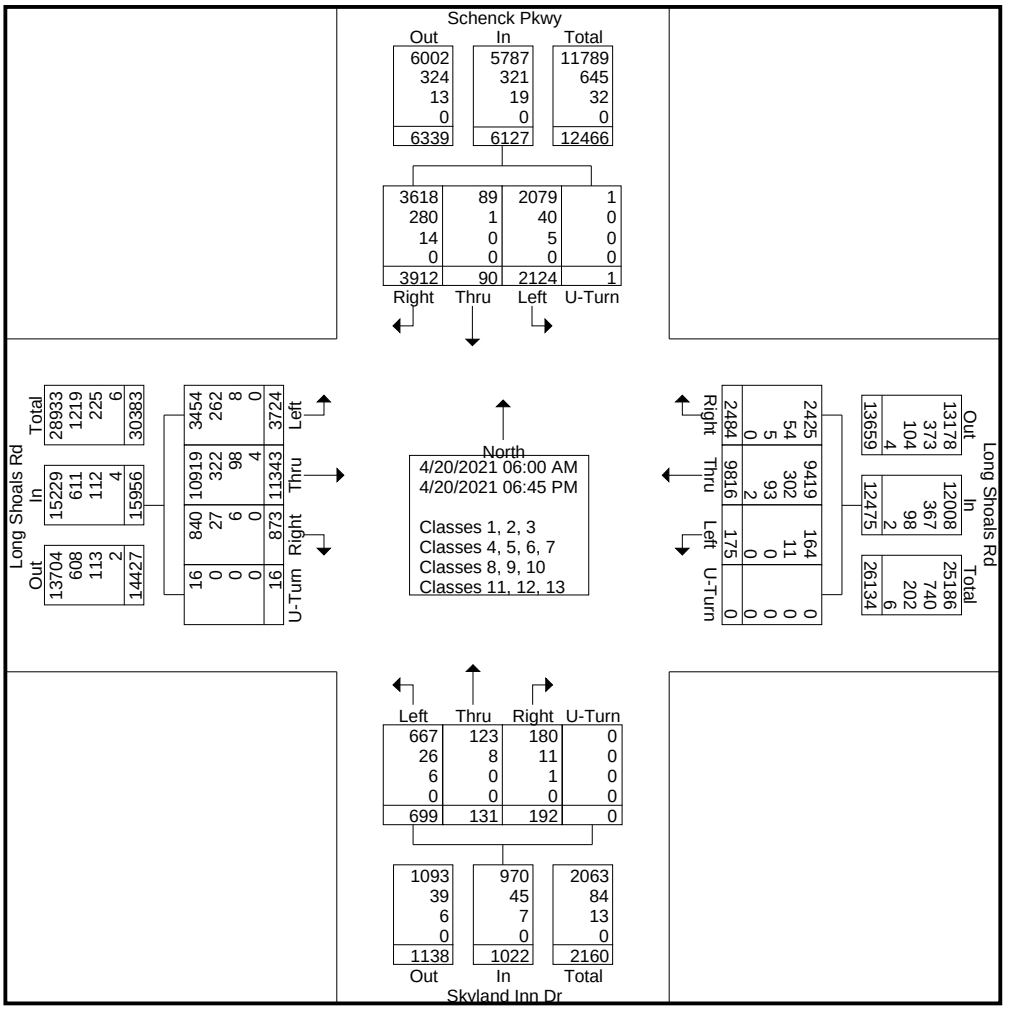

DocuSign Envelope ID: 5C03745C-4B01-4834-A65D-B77F558A4F46

Quality Counts

920 Blairhill Rd, Ste B-106
Charlotte, NC 28217

File Name : 15411717 - Skyland Inn Dr_Schenck Pkwy -- Long Shoals Rd
Site Code : 15411717
Start Date : 4/20/2021
Page No : 4

	Schenck Pkwy Southbound					Long Shoals Rd Westbound					Skyland Inn Dr Northbound					Long Shoals Rd Eastbound					
Start Time	Left	Thru	Right	U-Turn	App. Total	Left	Thru	Right	U-Turn	App. Total	Left	Thru	Right	U-Turn	App. Total	Left	Thru	Right	U-Turn	App. Total	Int. Total
Peak Hour Analysis From 06:00 AM to 11:45 AM - Peak 1 of 1																					
Peak Hour for Entire Intersection Begins at 07:15 AM																					
07:15 AM	31	1	62	0	94	5	189	47	0	241	7	3	1	0	11	73	331	29	**1**	434	780
07:30 AM	**42**	0	**75**	0	**117**	3	**244**	**59**	0	**306**	4	2	1	0	7	95	357	24	0	476	906
07:45 AM	37	**4**	70	0	111	4	216	59	0	279	9	**4**	0	0	13	94	**423**	**43**	0	**560**	**963**
08:00 AM	25	1	64	0	90	**6**	173	49	0	228	**18**	2	**3**	0	**23**	**99**	311	24	1	435	776
Total Volume	135	6	271	0	412	18	822	214	0	1054	38	11	5	0	54	361	1422	120	2	1905	3425
% App. Total	32.8	1.5	65.8	0		1.7	78	20.3	0		70.4	20.4	9.3	0		19	74.6	6.3	0.1		
PHF	.804	.375	.903	.000	.880	.750	.842	.907	.000	.861	.528	.688	.417	.000	.587	.912	.840	.698	.500	.850	.889

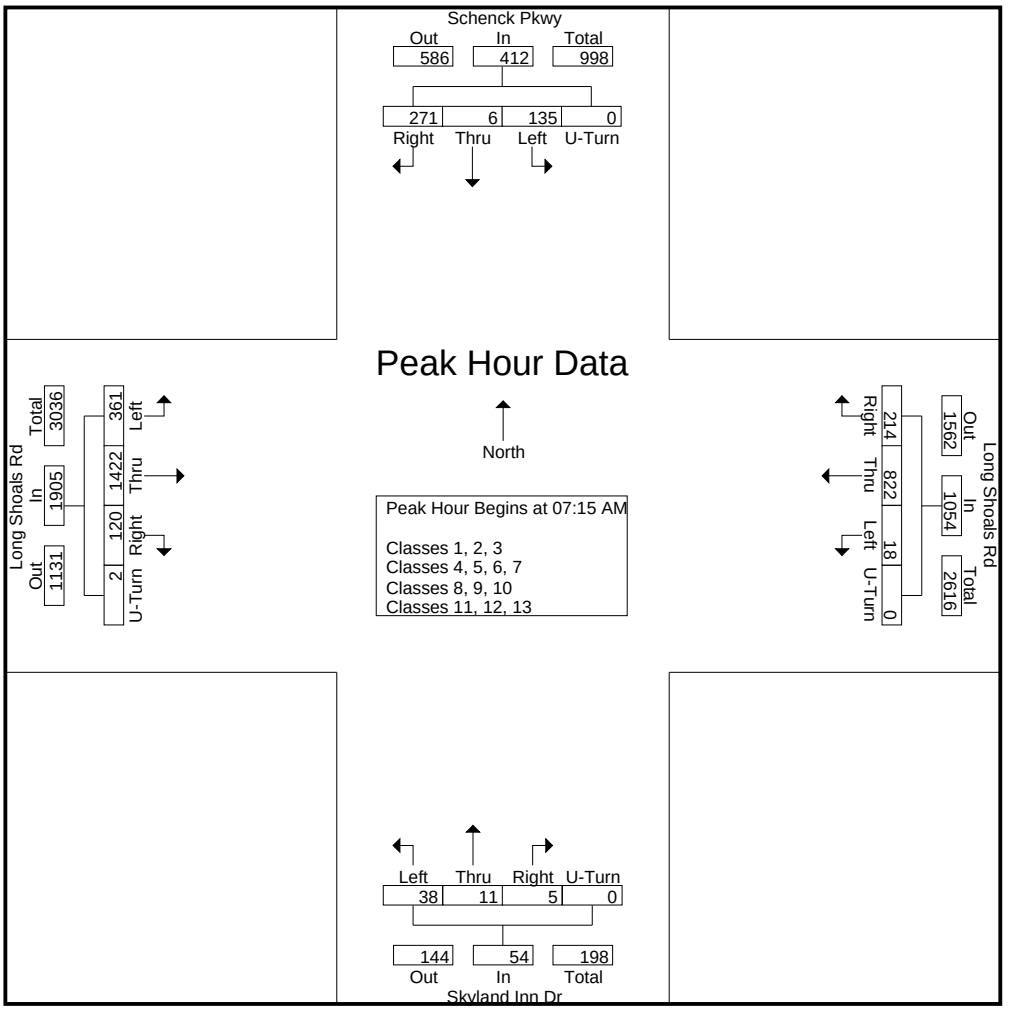

DocuSign Envelope ID: 5C03745C-4B01-4834-A65D-B77F558A4F46

Quality Counts

920 Blairhill Rd, Ste B-106
Charlotte, NC 28217

File Name : 15411717 - Skyland Inn Dr_Schenck Pkwy -- Long Shoals Rd
Site Code : 15411717
Start Date : 4/20/2021

	Schenck Pkwy Southbound					Long Shoals Rd Westbound					Skyland Inn Dr Northbound					Long Shoals Rd Eastbound					
Start Time	Left	Thru	Right	U-Turn	App. Total	Left	Thru	Right	U-Turn	App. Total	Left	Thru	Right	U-Turn	App. Total	Left	Thru	Right	U-Turn	App. Total	Int. Total
Peak Hour Analysis From 12:00 PM to 06:45 PM - Peak 1 of 1																					
Peak Hour for Entire Intersection Begins at 04:30 PM																					
04:30 PM	53	**3**	99	0	155	**5**	249	**56**	0	310	14	**2**	**9**	0	25	60	236	14	**1**	311	801
04:45 PM	48	0	82	0	130	2	266	54	0	322	14	0	5	0	19	65	244	16	1	326	797
05:00 PM	**56**	2	**117**	0	**175**	2	231	50	0	283	22	1	4	0	27	55	228	7	0	290	775
05:15 PM	54	3	86	0	143	2	**305**	56	0	**363**	**29**	2	1	0	**32**	**74**	**277**	**21**	0	**372**	**910**
Total Volume	211	8	384	0	603	11	1051	216	0	1278	79	5	19	0	103	254	985	58	2	1299	3283
% App. Total	35	1.3	63.7	0		0.9	82.2	16.9	0		76.7	4.9	18.4	0		19.6	75.8	4.5	0.2		
PHF	.942	.667	.821	.000	.861	.550	.861	.964	.000	.880	.681	.625	.528	.000	.805	.858	.889	.690	.500	.873	.902

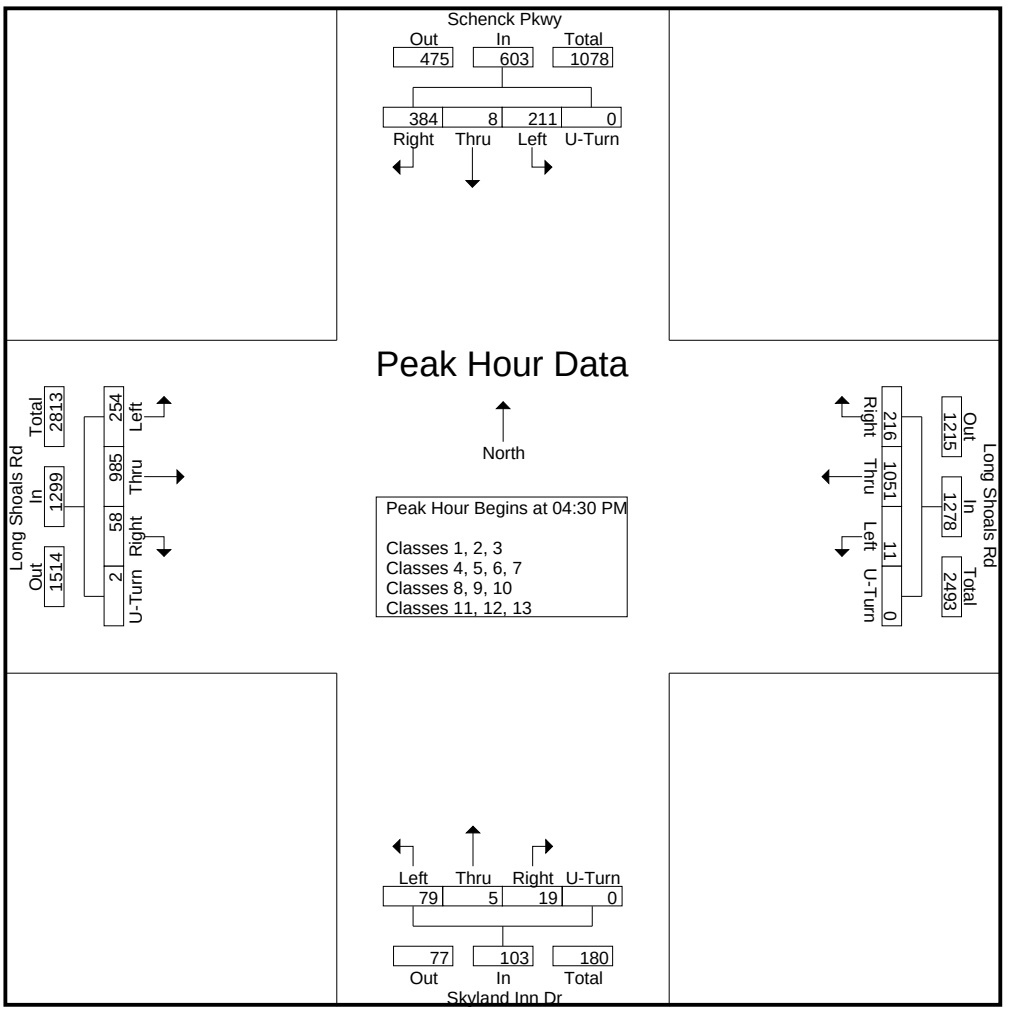

DocuSign Envelope ID: 5C03745C-4B01-4834-A65D-B77F558A4F46

Quality Counts

920 Blairhill Rd, Ste B-106
Charlotte, NC 28217

File Name : 15411717 - Skyland Inn Dr_Schenck Pkwy -- Long Shoals Rd
Site Code : 15411717
Start Date : 4/20/2021

Groups Printed- Classes 1, 2, 3

	Schenck Pkwy Southbound					Long Shoals Rd Westbound					Skyland Inn Dr Northbound					Long Shoals Rd Eastbound					
Start Time	Left	Thru	Right	U-Turn	App. Total	Left	Thru	Right	U-Turn	App. Total	Left	Thru	Right	U-Turn	App. Total	Left	Thru	Right	U-Turn	App. Total	Int. Total
06:00 AM	4	0	14	0	18	0	39	8	0	47	1	0	0	0	1	17	79	4	0	100	166
06:15 AM	9	1	26	0	36	0	64	20	0	84	2	0	0	0	2	24	96	3	0	123	245
06:30 AM	8	0	30	0	38	0	88	23	0	111	0	1	1	0	2	39	142	10	0	191	342
06:45 AM	10	0	31	0	41	1	98	19	0	118	7	0	0	0	7	53	182	20	0	255	421
Total	31	1	101	0	133	1	289	70	0	360	10	1	1	0	12	133	499	37	0	669	1174
07:00 AM	19	2	51	0	72	5	110	31	0	146	13	1	1	0	15	48	225	23	1	297	530
07:15 AM	31	1	59	0	91	5	182	47	0	234	7	3	0	0	10	61	326	29	1	417	752
07:30 AM	40	0	67	0	107	3	235	57	0	295	3	2	1	0	6	88	347	24	0	459	867
07:45 AM	37	3	61	0	101	4	207	56	0	267	9	4	0	0	13	89	408	43	0	540	921
Total	127	6	238	0	371	17	734	191	0	942	32	10	2	0	44	286	1306	119	2	1713	3070
08:00 AM	25	1	57	0	83	6	169	48	0	223	17	0	3	0	20	90	293	24	1	408	734
08:15 AM	23	1	52	1	77	3	165	51	0	219	11	2	4	0	17	82	256	18	0	356	669
08:30 AM	39	5	59	0	103	6	135	47	0	188	13	3	3	0	19	80	198	19	0	297	607
08:45 AM	17	0	52	0	69	4	156	65	0	225	7	1	3	0	11	92	227	22	1	342	647
Total	104	7	220	1	332	19	625	211	0	855	48	6	13	0	67	344	974	83	2	1403	2657
09:00 AM	32	0	61	0	93	5	128	51	0	184	14	4	1	0	19	68	166	20	0	254	550
09:15 AM	24	2	58	0	84	5	138	36	0	179	13	2	3	0	18	64	178	24	1	267	548
09:30 AM	30	0	62	0	92	6	115	42	0	163	6	0	5	0	11	74	183	9	0	266	532
09:45 AM	38	1	60	0	99	5	130	54	0	189	13	4	4	0	21	78	184	19	0	281	590
Total	124	3	241	0	368	21	511	183	0	715	46	10	13	0	69	284	711	72	1	1068	2220
10:00 AM	32	3	60	0	95	2	151	41	0	194	10	3	3	0	16	64	143	14	1	222	527
10:15 AM	29	3	63	0	95	5	127	38	0	170	12	3	4	0	19	66	167	15	0	248	532
10:30 AM	47	0	56	0	103	2	158	33	0	193	5	1	8	0	14	69	161	15	0	245	555
10:45 AM	45	2	48	0	95	3	137	34	0	174	11	3	3	0	17	77	174	17	1	269	555
Total	153	8	227	0	388	12	573	146	0	731	38	10	18	0	66	276	645	61	2	984	2169
11:00 AM	39	1	77	0	117	4	147	48	0	199	10	3	6	0	19	54	148	14	1	217	552
11:15 AM	39	1	70	0	110	1	163	44	0	208	11	2	4	0	17	63	178	9	0	250	585
11:30 AM	53	2	80	0	135	0	152	58	0	210	18	2	2	0	22	54	198	17	0	269	636
11:45 AM	40	5	80	0	125	8	159	52	0	219	15	3	3	0	21	93	196	11	0	300	665
Total	171	9	307	0	487	13	621	202	0	836	54	10	15	0	79	264	720	51	1	1036	2438
12:00 PM	55	2	87	0	144	2	153	63	0	218	18	4	6	0	28	79	216	25	1	321	711
12:15 PM	42	3	81	0	126	4	179	60	0	243	14	3	6	0	23	92	211	15	0	318	710
12:30 PM	53	3	78	0	134	5	178	71	0	254	11	2	8	0	21	77	209	14	0	300	709
12:45 PM	57	8	96	0	161	2	172	75	0	249	17	6	5	0	28	74	177	23	0	274	712
Total	207	16	342	0	565	13	682	269	0	964	60	15	25	0	100	322	813	77	1	1213	2842
01:00 PM	61	3	85	0	149	7	196	39	0	242	23	1	6	0	30	86	191	17	0	294	715
01:15 PM	68	4	81	0	153	6	179	56	0	241	19	7	1	0	27	83	199	28	0	310	731
01:30 PM	42	1	82	0	125	4	198	56	0	258	14	3	4	0	21	69	190	19	1	279	683
01:45 PM	47	3	74	0	124	5	181	49	0	235	14	6	3	0	23	68	226	18	0	312	694
Total	218	11	322	0	551	22	754	200	0	976	70	17	14	0	101	306	806	82	1	1195	2823
02:00 PM	43	2	90	0	135	4	151	49	0	204	16	0	7	0	23	66	207	16	0	289	651
02:15 PM	44	1	73	0	118	2	191	39	0	232	17	4	5	0	26	50	220	9	0	279	655
02:30 PM	50	1	85	0	136	3	189	46	0	238	17	2	4	0	23	47	265	13	1	326	723
02:45 PM	44	0	68	0	112	6	211	42	0	259	20	4	4	0	28	59	247	10	0	316	715
Total	181	4	316	0	501	15	742	176	0	933	70	10	20	0	100	222	939	48	1	1210	2744
03:00 PM	53	2	72	0	127	0	236	52	0	288	14	4	6	0	24	56	246	15	0	317	756
03:15 PM	36	1	90	0	127	3	284	39	0	326	13	3	1	0	17	68	239	15	0	322	792
03:30 PM	50	0	94	0	144	6	229	58	0	293	11	2	7	0	20	63	207	12	0	282	739

DocuSign Envelope ID: 5C03745C-4B01-4834-A65D-B77F558A4F46

Quality Counts

920 Blairhill Rd, Ste B-106
Charlotte, NC 28217

File Name : 15411717 - Skyland Inn Dr_Schenck Pkwy -- Long Shoals Rd
Site Code : 15411717
Start Date : 4/20/2021

Groups Printed- Classes 1, 2, 3

	Schenck Pkwy Southbound					Long Shoals Rd Westbound					Skyland Inn Dr Northbound					Long Shoals Rd Eastbound					
Start Time	Left	Thru	Right	U-Turn	App. Total	Left	Thru	Right	U-Turn	App. Total	Left	Thru	Right	U-Turn	App. Total	Left	Thru	Right	U-Turn	App. Total	Int. Total
03:45 PM	43	0	56	0	99	1	285	45	0	331	14	4	5	0	23	81	266	14	0	361	814
Total	182	3	312	0	497	10	1034	194	0	1238	52	13	19	0	84	268	958	56	0	1282	3101
04:00 PM	67	1	97	0	165	2	235	40	0	277	15	1	5	0	21	63	220	16	0	299	762
04:15 PM	43	4	71	0	118	0	266	52	0	318	12	4	3	0	19	55	286	10	0	351	806
04:30 PM	53	3	83	0	139	5	241	55	0	301	14	2	8	0	24	58	229	13	1	301	765
04:45 PM	45	0	80	0	125	2	262	52	0	316	14	0	5	0	19	64	238	15	1	318	778
Total	208	8	331	0	547	9	1004	199	0	1212	55	7	21	0	83	240	973	54	2	1269	3111
05:00 PM	56	2	112	0	170	2	229	50	0	281	22	1	4	0	27	55	221	7	0	283	761
05:15 PM	54	3	86	0	143	2	301	55	0	358	29	2	1	0	32	73	273	20	0	366	899
05:30 PM	52	0	79	0	131	0	265	54	0	319	23	3	2	0	28	78	206	20	0	304	782
05:45 PM	37	0	87	0	124	1	270	48	0	319	14	2	2	0	18	75	227	17	0	319	780
Total	199	5	364	0	568	5	1065	207	0	1277	88	8	9	0	105	281	927	64	0	1272	3222
06:00 PM	46	4	107	0	157	1	235	58	0	294	5	4	5	0	14	63	186	11	0	260	725
06:15 PM	45	1	62	0	108	3	215	46	0	264	5	1	1	0	7	58	166	11	1	236	615
06:30 PM	38	1	55	0	94	2	175	38	0	215	19	0	2	0	21	56	139	8	1	204	534
06:45 PM	45	2	73	0	120	1	160	35	0	196	15	1	2	0	18	51	157	6	1	215	549
Total	174	8	297	0	479	7	785	177	0	969	44	6	10	0	60	228	648	36	3	915	2423
Grand Total	2079	89	3618	1	5787	164	9419	2425	0	12008	667	123	180	0	970	3454	10919	840	16	15229	33994
Apprch %	35.9	1.5	62.5	0		1.4	78.4	20.2	0		68.8	12.7	18.6	0		22.7	71.7	5.5	0.1		
Total %	6.1	0.3	10.6	0	17	0.5	27.7	7.1	0	35.3	2	0.4	0.5	0	2.9	10.2	32.1	2.5	0	44.8	

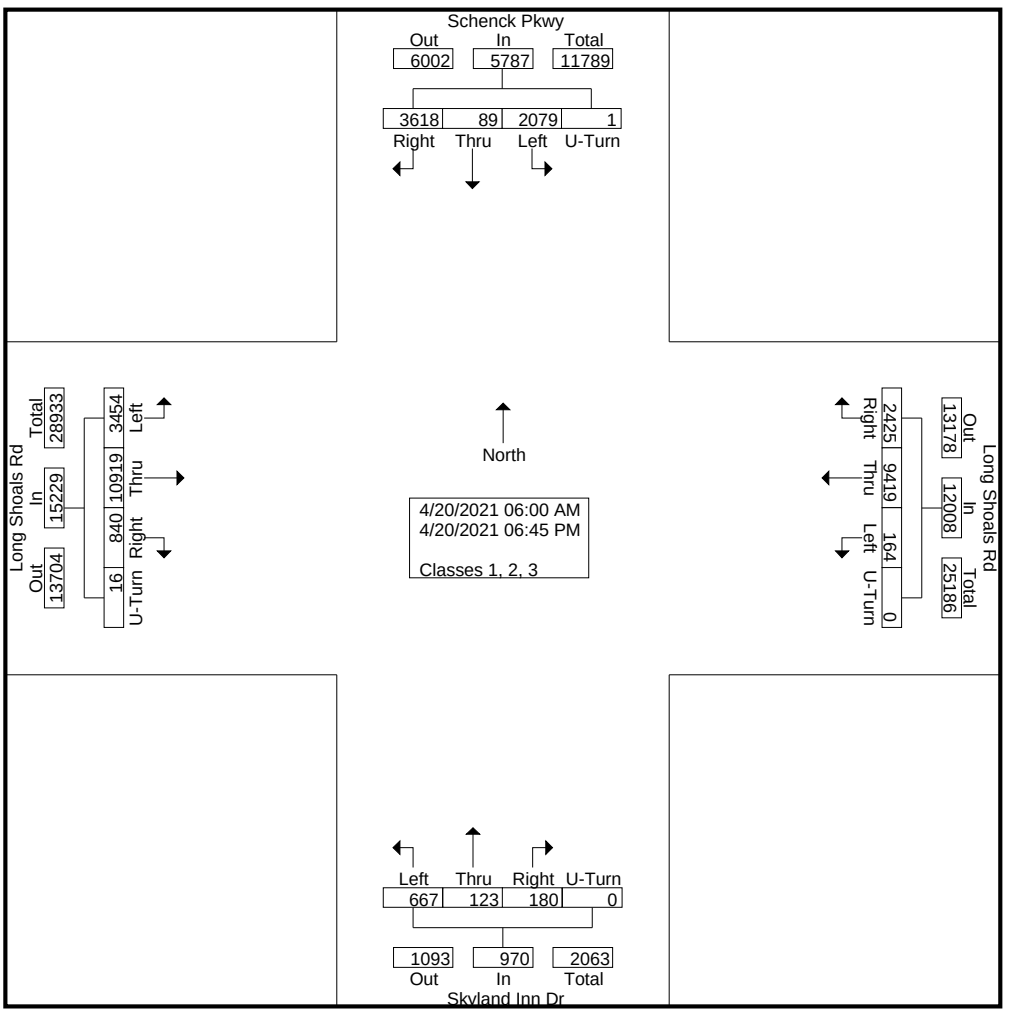

DocuSign Envelope ID: 5C03745C-4B01-4834-A65D-B77F558A4F46

Quality Counts

920 Blairhill Rd, Ste B-106
Charlotte, NC 28217

File Name : 15411717 - Skyland Inn Dr_Schenck Pkwy -- Long Shoals Rd
Site Code : 15411717
Start Date : 4/20/2021

	Schenck Pkwy Southbound					Long Shoals Rd Westbound					Skyland Inn Dr Northbound					Long Shoals Rd Eastbound					
Start Time	Left	Thru	Right	U-Turn	App. Total	Left	Thru	Right	U-Turn	App. Total	Left	Thru	Right	U-Turn	App. Total	Left	Thru	Right	U-Turn	App. Total	Int. Total
Peak Hour Analysis From 06:00 AM to 11:45 AM - Peak 1 of 1																					
Peak Hour for Entire Intersection Begins at 07:15 AM																					
07:15 AM	31	1	59	0	91	5	182	47	0	234	7	3	0	0	10	61	326	29	**1**	417	752
07:30 AM	**40**	0	**67**	0	**107**	3	**235**	**57**	0	**295**	3	2	1	0	6	88	347	24	0	459	867
07:45 AM	37	**3**	61	0	101	4	207	56	0	267	9	**4**	0	0	13	89	**408**	**43**	0	**540**	**921**
08:00 AM	25	1	57	0	83	**6**	169	48	0	223	**17**	0	**3**	0	**20**	**90**	293	24	1	408	734
Total Volume	133	5	244	0	382	18	793	208	0	1019	36	9	4	0	49	328	1374	120	2	1824	3274
% App. Total	34.8	1.3	63.9	0		1.8	77.8	20.4	0		73.5	18.4	8.2	0		18	75.3	6.6	0.1		
PHF	.831	.417	.910	.000	.893	.750	.844	.912	.000	.864	.529	.563	.333	.000	.613	.911	.842	.698	.500	.844	.889

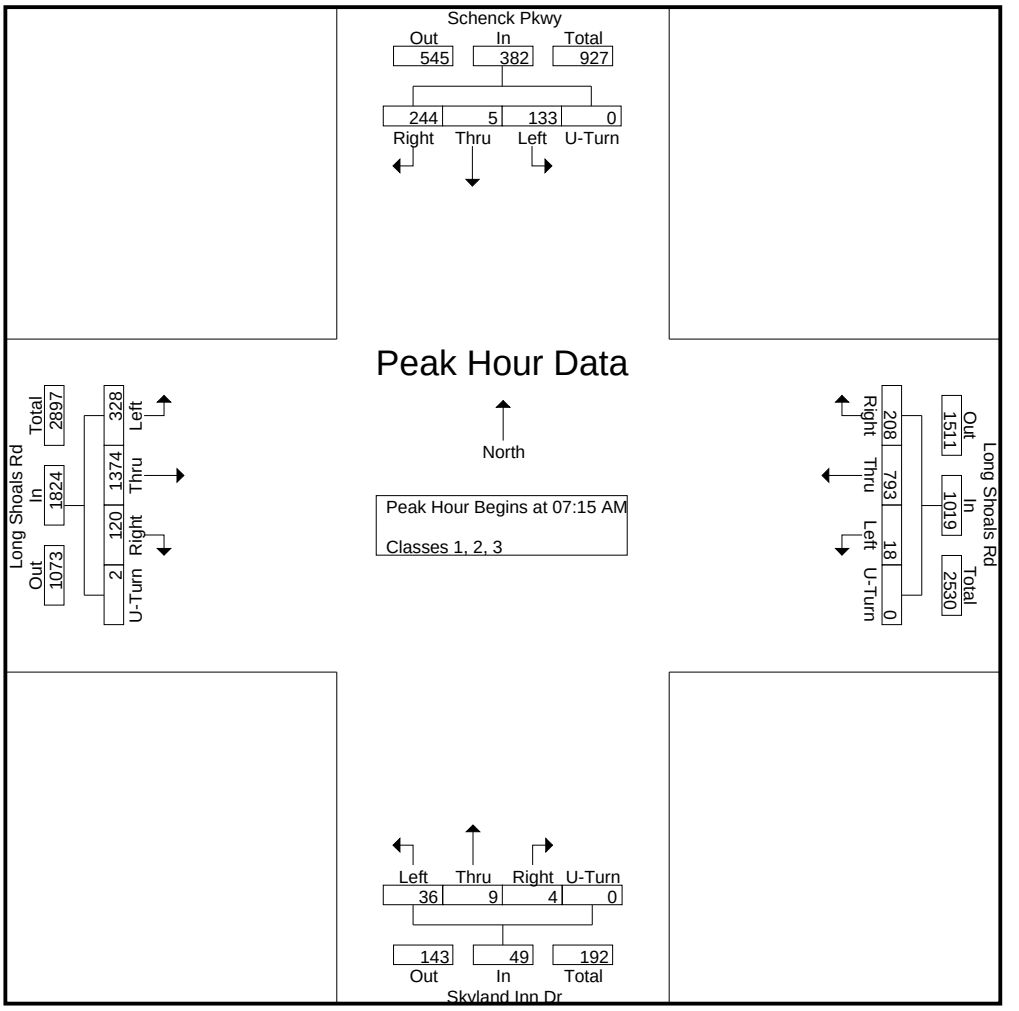

DocuSign Envelope ID: 5C03745C-4B01-4834-A65D-B77F558A4F46

Quality Counts

920 Blairhill Rd, Ste B-106
Charlotte, NC 28217

File Name : 15411717 - Skyland Inn Dr_Schenck Pkwy -- Long Shoals Rd
Site Code : 15411717
Start Date : 4/20/2021

	Schenck Pkwy Southbound					Long Shoals Rd Westbound					Skyland Inn Dr Northbound					Long Shoals Rd Eastbound					
Start Time	Left	Thru	Right	U-Turn	App. Total	Left	Thru	Right	U-Turn	App. Total	Left	Thru	Right	U-Turn	App. Total	Left	Thru	Right	U-Turn	App. Total	Int. Total
Peak Hour Analysis From 12:00 PM to 06:45 PM - Peak 1 of 1																					
Peak Hour for Entire Intersection Begins at 05:00 PM																					
05:00 PM	**56**	2	**112**	0	**170**	**2**	229	50	0	281	22	1	**4**	0	27	55	221	7	0	283	761
05:15 PM	54	**3**	86	0	143	2	**301**	**55**	0	**358**	**29**	2	1	0	**32**	73	**273**	**20**	0	**366**	**899**
05:30 PM	52	0	79	0	131	0	265	54	0	319	23	**3**	2	0	28	**78**	206	20	0	304	782
05:45 PM	37	0	87	0	124	1	270	48	0	319	14	2	2	0	18	75	227	17	0	319	780
Total Volume	199	5	364	0	568	5	1065	207	0	1277	88	8	9	0	105	281	927	64	0	1272	3222
% App. Total	35	0.9	64.1	0		0.4	83.4	16.2	0		83.8	7.6	8.6	0		22.1	72.9	5	0		
PHF	.888	.417	.813	.000	.835	.625	.885	.941	.000	.892	.759	.667	.563	.000	.820	.901	.849	.800	.000	.869	.896

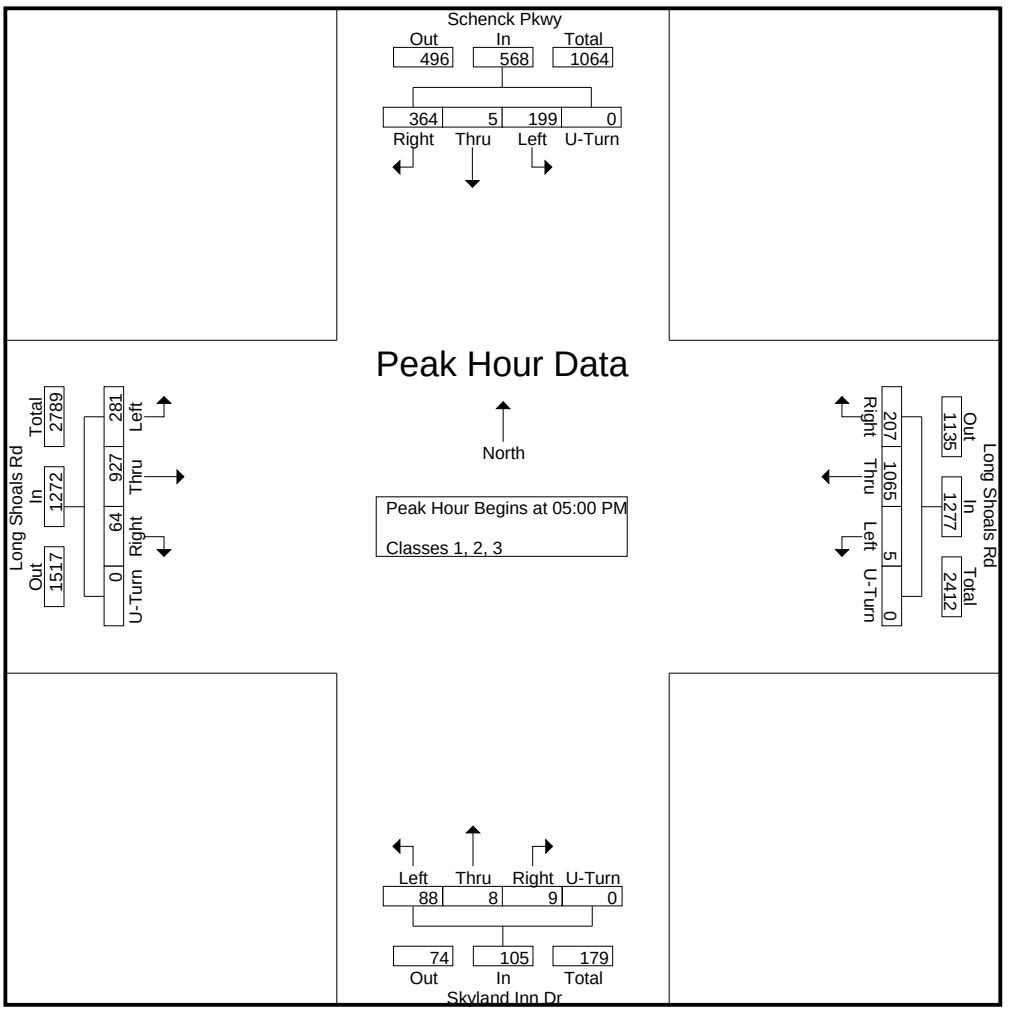

DocuSign Envelope ID: 5C03745C-4B01-4834-A65D-B77F558A4F46

Quality Counts

920 Blairhill Rd, Ste B-106
Charlotte, NC 28217

File Name : 15411717 - Skyland Inn Dr_Schenck Pkwy -- Long Shoals Rd
Site Code : 15411717
Start Date : 4/20/2021
Page No : 1

Groups Printed- Classes 4, 5, 6, 7

	Schenck Pkwy Southbound					Long Shoals Rd Westbound					Skyland Inn Dr Northbound					Long Shoals Rd Eastbound					
Start Time	Left	Thru	Right	U-Turn	App. Total	Left	Thru	Right	U-Turn	App. Total	Left	Thru	Right	U-Turn	App. Total	Left	Thru	Right	U-Turn	App. Total	Int. Total
06:00 AM	0	0	0	0	0	4	2	0	0	6	0	0	2	0	2	1	1	0	0	2	10
06:15 AM	1	0	0	0	1	0	6	2	0	8	1	0	2	0	3	0	4	0	0	4	16
06:30 AM	0	0	0	0	0	0	3	0	0	3	0	0	2	0	2	3	0	1	0	4	9
06:45 AM	0	0	0	0	0	1	2	3	0	6	2	1	0	0	3	3	8	2	0	13	22
Total	1	0	0	0	1	5	13	5	0	23	3	1	6	0	10	7	13	3	0	23	57
07:00 AM	2	0	2	0	4	0	2	1	0	3	0	0	0	0	0	5	2	0	0	7	14
07:15 AM	0	0	3	0	3	0	6	0	0	6	0	0	1	0	1	10	2	0	0	12	22
07:30 AM	2	0	8	0	10	0	7	2	0	9	1	0	0	0	1	7	10	0	0	17	37
07:45 AM	0	1	9	0	10	0	7	2	0	9	0	0	0	0	0	5	13	0	0	18	37
Total	4	1	22	0	27	0	22	5	0	27	1	0	1	0	2	27	27	0	0	54	110
08:00 AM	0	0	7	0	7	0	3	1	0	4	1	2	0	0	3	9	15	0	0	24	38
08:15 AM	1	0	7	0	8	1	4	0	0	5	0	0	0	0	0	5	5	1	0	11	24
08:30 AM	1	0	5	0	6	0	5	2	0	7	1	0	0	0	1	6	14	0	0	20	34
08:45 AM	0	0	12	0	12	1	6	0	0	7	0	0	0	0	0	7	13	0	0	20	39
Total	2	0	31	0	33	2	18	3	0	23	2	2	0	0	4	27	47	1	0	75	135
09:00 AM	0	0	5	0	5	0	7	3	0	10	0	0	0	0	0	3	4	1	0	8	23
09:15 AM	1	0	7	0	8	0	12	1	0	13	0	1	0	0	1	14	9	0	0	23	45
09:30 AM	2	0	6	0	8	0	10	2	0	12	1	0	0	0	1	5	8	1	0	14	35
09:45 AM	1	0	8	0	9	0	7	0	0	7	1	0	0	0	1	5	7	0	0	12	29
Total	4	0	26	0	30	0	36	6	0	42	2	1	0	0	3	27	28	2	0	57	132
10:00 AM	0	0	8	0	8	0	8	0	0	8	0	0	0	0	0	7	3	0	0	10	26
10:15 AM	1	0	8	0	9	0	8	2	0	10	0	0	0	0	0	6	4	1	0	11	30
10:30 AM	1	0	5	0	6	0	6	1	0	7	1	0	1	0	2	9	6	0	0	15	30
10:45 AM	1	0	8	0	9	0	9	1	0	10	0	0	0	0	0	8	5	0	0	13	32
Total	3	0	29	0	32	0	31	4	0	35	1	0	1	0	2	30	18	1	0	49	118
11:00 AM	1	0	6	0	7	0	8	1	0	9	0	0	0	0	0	4	6	1	0	11	27
11:15 AM	2	0	10	0	12	0	6	1	0	7	0	0	0	0	0	9	10	3	0	22	41
11:30 AM	1	0	5	0	6	0	6	1	0	7	0	0	0	0	0	2	7	0	0	9	22
11:45 AM	0	0	4	0	4	0	10	1	0	11	1	1	0	0	2	12	2	1	0	15	32
Total	4	0	25	0	29	0	30	4	0	34	1	1	0	0	2	27	25	5	0	57	122
12:00 PM	2	0	10	0	12	0	7	0	0	7	2	0	0	0	2	9	5	0	0	14	35
12:15 PM	2	0	2	0	4	0	7	0	0	7	1	0	0	0	1	1	14	0	0	15	27
12:30 PM	0	0	5	0	5	0	9	2	0	11	1	0	0	0	1	8	7	1	0	16	33
12:45 PM	1	0	16	0	17	0	5	1	0	6	0	1	0	0	1	2	10	0	0	12	36
Total	5	0	33	0	38	0	28	3	0	31	4	1	0	0	5	20	36	1	0	57	131
01:00 PM	1	0	5	0	6	1	10	0	0	11	1	0	0	0	1	7	4	2	0	13	31
01:15 PM	0	0	5	0	5	0	2	1	0	3	1	0	0	0	1	14	12	0	0	26	35
01:30 PM	0	0	1	0	1	0	8	1	0	9	1	1	0	0	2	7	4	2	0	13	25
01:45 PM	1	0	6	0	7	1	9	0	0	10	1	0	0	0	1	7	7	0	0	14	32
Total	2	0	17	0	19	2	29	2	0	33	4	1	0	0	5	35	27	4	0	66	123
02:00 PM	1	0	16	0	17	1	7	0	0	8	0	0	1	0	1	1	8	1	0	10	36
02:15 PM	0	0	4	0	4	0	4	1	0	5	0	0	0	0	0	1	10	0	0	11	20
02:30 PM	2	0	6	0	8	0	4	3	0	7	0	0	0	0	0	17	10	1	0	28	43
02:45 PM	0	0	1	0	1	0	15	4	0	19	1	0	1	0	2	4	7	0	0	11	33
Total	3	0	27	0	30	1	30	8	0	39	1	0	2	0	3	23	35	2	0	60	132
03:00 PM	0	0	12	0	12	0	8	1	0	9	1	0	0	0	1	8	4	0	0	12	34
03:15 PM	1	0	4	0	5	0	11	2	0	13	1	0	1	0	2	2	5	0	0	7	27
03:30 PM	0	0	3	0	3	0	5	1	0	6	0	0	0	0	0	9	9	0	0	18	27

DocuSign Envelope ID: 5C03745C-4B01-4834-A65D-B77F558A4F46

Quality Counts

920 Blairhill Rd, Ste B-106
Charlotte, NC 28217

File Name : 15411717 - Skyland Inn Dr_Schenck Pkwy -- Long Shoals Rd
Site Code : 15411717
Start Date : 4/20/2021

Groups Printed- Classes 4, 5, 6, 7

	Schenck Pkwy Southbound					Long Shoals Rd Westbound					Skyland Inn Dr Northbound					Long Shoals Rd Eastbound					
Start Time	Left	Thru	Right	U-Turn	App. Total	Left	Thru	Right	U-Turn	App. Total	Left	Thru	Right	U-Turn	App. Total	Left	Thru	Right	U-Turn	App. Total	Int. Total
03:45 PM	2	0	12	0	14	0	2	2	0	4	0	0	0	0	0	7	5	0	0	12	30
Total	3	0	31	0	34	0	26	6	0	32	2	0	1	0	3	26	23	0	0	49	118
04:00 PM	0	0	8	0	8	0	8	1	0	9	2	0	0	0	2	2	5	1	0	8	27
04:15 PM	0	0	1	0	1	0	4	1	0	5	1	0	0	0	1	3	7	0	0	10	17
04:30 PM	0	0	16	0	16	0	6	1	0	7	0	0	0	0	0	2	2	1	0	5	28
04:45 PM	3	0	2	0	5	0	2	2	0	4	0	0	0	0	0	1	5	1	0	7	16
Total	3	0	27	0	30	0	20	5	0	25	3	0	0	0	3	8	19	3	0	30	88
05:00 PM	0	0	5	0	5	0	1	0	0	1	0	0	0	0	0	0	6	0	0	6	12
05:15 PM	0	0	0	0	0	0	3	1	0	4	0	0	0	0	0	1	2	1	0	4	8
05:30 PM	1	0	2	0	3	0	2	0	0	2	0	0	0	0	0	0	2	0	0	2	7
05:45 PM	3	0	0	0	3	0	5	0	0	5	1	0	0	0	1	0	3	1	0	4	13
Total	4	0	7	0	11	0	11	1	0	12	1	0	0	0	1	1	13	2	0	16	40
06:00 PM	0	0	2	0	2	0	1	0	0	1	0	0	0	0	0	2	3	0	0	5	8
06:15 PM	1	0	2	0	3	1	1	0	0	2	0	1	0	0	1	2	3	0	0	5	11
06:30 PM	0	0	1	0	1	0	4	0	0	4	0	0	0	0	0	0	2	1	0	3	8
06:45 PM	1	0	0	0	1	0	2	2	0	4	1	0	0	0	1	0	3	2	0	5	11
Total	2	0	5	0	7	1	8	2	0	11	1	1	0	0	2	4	11	3	0	18	38
Grand Total	40	1	280	0	321	11	302	54	0	367	26	8	11	0	45	262	322	27	0	611	1344
Apprch %	12.5	0.3	87.2	0		3	82.3	14.7	0		57.8	17.8	24.4	0		42.9	52.7	4.4	0		
Total %	3	0.1	20.8	0	23.9	0.8	22.5	4	0	27.3	1.9	0.6	0.8	0	3.3	19.5	24	2	0	45.5	

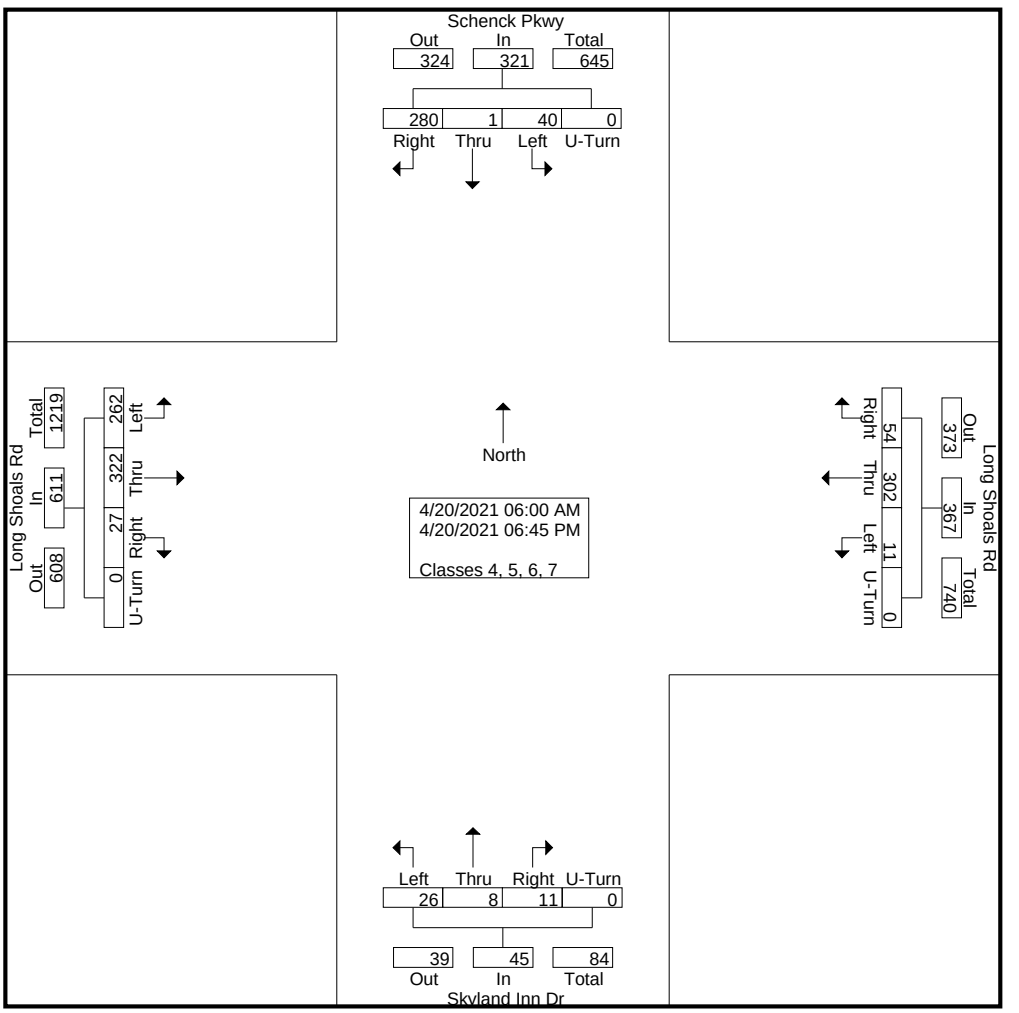

DocuSign Envelope ID: 5C03745C-4B01-4834-A65D-B77F558A4F46

Quality Counts

920 Blairhill Rd, Ste B-106
Charlotte, NC 28217

File Name : 15411717 - Skyland Inn Dr_Schenck Pkwy -- Long Shoals Rd
Site Code : 15411717
Start Date : 4/20/2021
Page No : 3

	Schenck Pkwy Southbound					Long Shoals Rd Westbound					Skyland Inn Dr Northbound					Long Shoals Rd Eastbound					
Start Time	Left	Thru	Right	U-Turn	App. Total	Left	Thru	Right	U-Turn	App. Total	Left	Thru	Right	U-Turn	App. Total	Left	Thru	Right	U-Turn	App. Total	Int. Total
Peak Hour Analysis From 06:00 AM to 11:45 AM - Peak 1 of 1																					
Peak Hour for Entire Intersection Begins at 08:45 AM																					
08:45 AM	0	0	**12**	0	**12**	**1**	6	0	0	7	0	0	0	0	0	7	**13**	0	0	20	39
09:00 AM	0	0	5	0	5	0	7	**3**	0	10	0	0	0	0	0	3	4	**1**	0	8	23
09:15 AM	1	0	7	0	8	0	**12**	1	0	**13**	0	**1**	0	0	**1**	**14**	9	0	0	**23**	**45**
09:30 AM	**2**	0	6	0	8	0	10	2	0	12	**1**	0	0	0	1	5	8	1	0	14	35
Total Volume	3	0	30	0	33	1	35	6	0	42	1	1	0	0	2	29	34	2	0	65	142
% App. Total	9.1	0	90.9	0		2.4	83.3	14.3	0		50	50	0	0		44.6	52.3	3.1	0		
PHF	.375	.000	.625	.000	.688	.250	.729	.500	.000	.808	.250	.250	.000	.000	.500	.518	.654	.500	.000	.707	.789

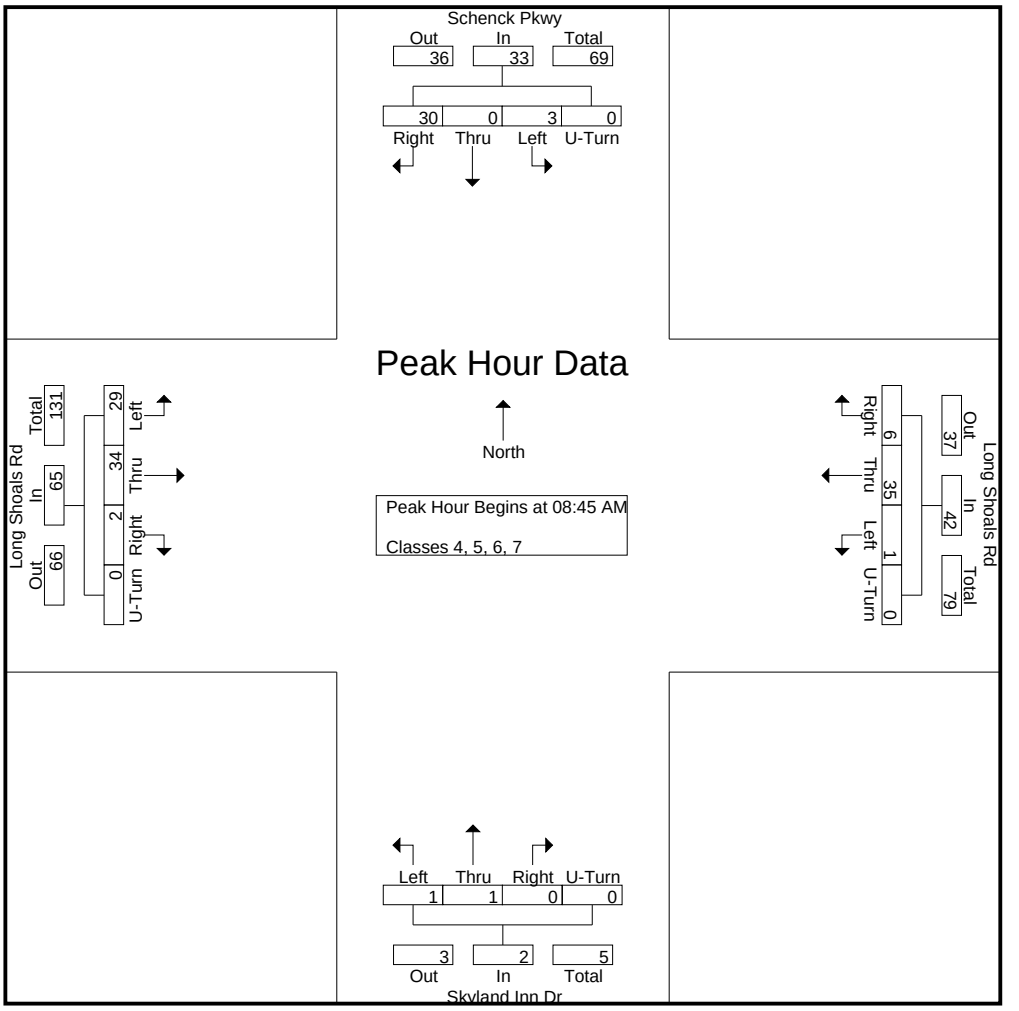

DocuSign Envelope ID: 5C03745C-4B01-4834-A65D-B77F558A4F46

Quality Counts

920 Blairhill Rd, Ste B-106
Charlotte, NC 28217

File Name : 15411717 - Skyland Inn Dr_Schenck Pkwy -- Long Shoals Rd
Site Code : 15411717
Start Date : 4/20/2021

	Schenck Pkwy Southbound					Long Shoals Rd Westbound					Skyland Inn Dr Northbound					Long Shoals Rd Eastbound					
Start Time	Left	Thru	Right	U-Turn	App. Total	Left	Thru	Right	U-Turn	App. Total	Left	Thru	Right	U-Turn	App. Total	Left	Thru	Right	U-Turn	App. Total	Int. Total
Peak Hour Analysis From 12:00 PM to 06:45 PM - Peak 1 of 1																					
Peak Hour for Entire Intersection Begins at 02:30 PM																					
02:30 PM	**2**	0	6	0	8	0	4	3	0	7	0	0	0	0	0	**17**	**10**	**1**	0	**28**	**43**
02:45 PM	0	0	1	0	1	0	**15**	**4**	0	**19**	**1**	0	**1**	0	**2**	4	7	0	0	11	33
03:00 PM	0	0	**12**	0	**12**	0	8	1	0	9	1	0	0	0	1	8	4	0	0	12	34
03:15 PM	1	0	4	0	5	0	11	2	0	13	1	0	1	0	2	2	5	0	0	7	27
Total Volume	3	0	23	0	26	0	38	10	0	48	3	0	2	0	5	31	26	1	0	58	137
% App. Total	11.5	0	88.5	0		0	79.2	20.8	0		60	0	40	0		53.4	44.8	1.7	0		
PHF	.375	.000	.479	.000	.542	.000	.633	.625	.000	.632	.750	.000	.500	.000	.625	.456	.650	.250	.000	.518	.797

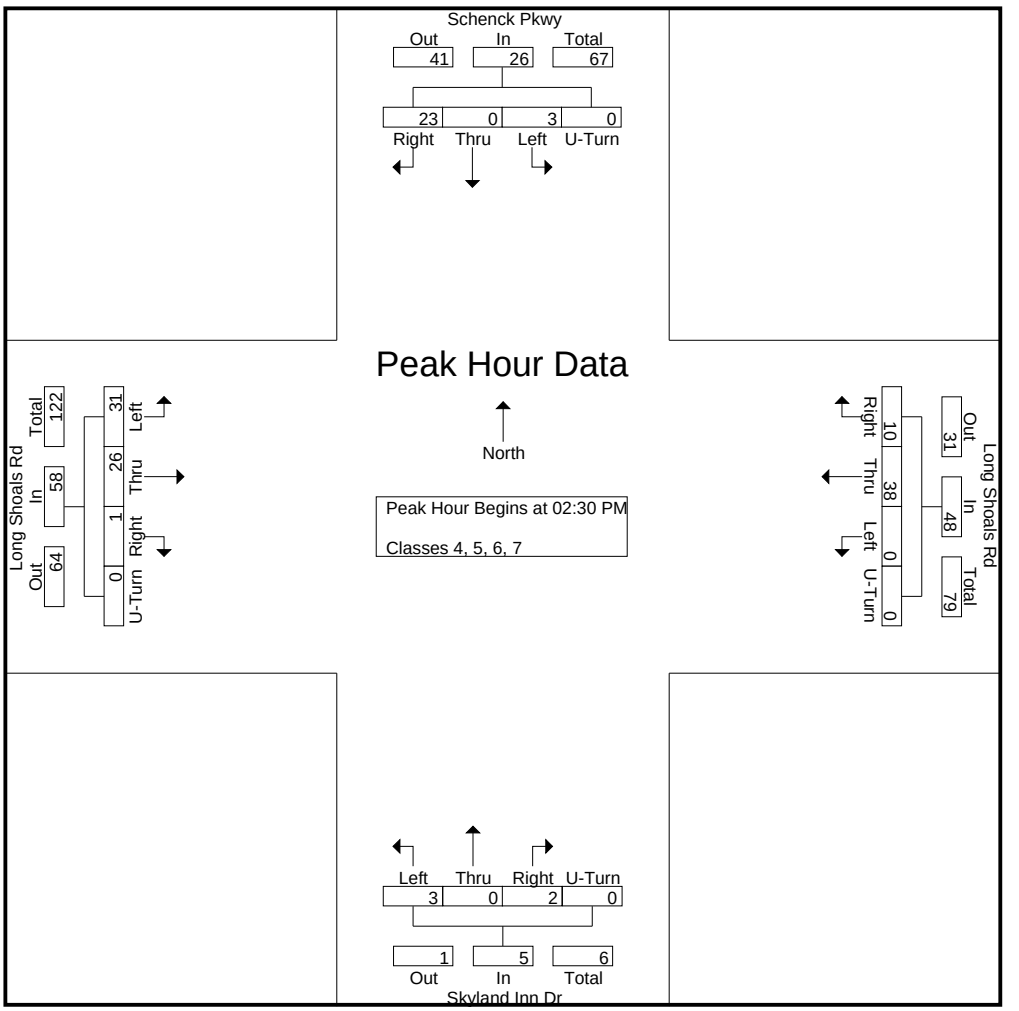

DocuSign Envelope ID: 5C03745C-4B01-4834-A65D-B77F558A4F46

Quality Counts

920 Blairhill Rd, Ste B-106
Charlotte, NC 28217

File Name : 15411717 - Skyland Inn Dr_Schenck Pkwy -- Long Shoals Rd
Site Code : 15411717
Start Date : 4/20/2021
Page No : 1

Groups Printed- Classes 8, 9, 10

	Schenck Pkwy Southbound					Long Shoals Rd Westbound					Skyland Inn Dr Northbound					Long Shoals Rd Eastbound					
Start Time	Left	Thru	Right	U-Turn	App. Total	Left	Thru	Right	U-Turn	App. Total	Left	Thru	Right	U-Turn	App. Total	Left	Thru	Right	U-Turn	App. Total	Int. Total
06:00 AM	0	0	1	0	1	0	1	0	0	1	0	0	0	0	0	0	0	1	0	1	3
06:15 AM	0	0	0	0	0	0	1	0	0	1	0	0	0	0	0	0	1	0	0	1	2
06:30 AM	0	0	0	0	0	0	0	0	0	0	1	0	0	0	1	0	1	1	0	2	3
06:45 AM	0	0	0	0	0	0	1	0	0	1	0	0	0	0	0	0	2	0	0	2	3
Total	0	0	1	0	1	0	3	0	0	3	1	0	0	0	1	0	4	2	0	6	11
07:00 AM	0	0	0	0	0	0	0	0	0	0	0	0	0	0	0	0	0	0	0	0	0
07:15 AM	0	0	0	0	0	0	1	0	0	1	0	0	0	0	0	2	3	0	0	5	6
07:30 AM	0	0	0	0	0	0	2	0	0	2	0	0	0	0	0	0	0	0	0	0	2
07:45 AM	0	0	0	0	0	0	2	1	0	3	0	0	0	0	0	0	2	0	0	2	5
Total	0	0	0	0	0	0	5	1	0	6	0	0	0	0	0	2	5	0	0	7	13
08:00 AM	0	0	0	0	0	0	1	0	0	1	0	0	0	0	0	0	3	0	0	3	4
08:15 AM	1	0	0	0	1	0	4	0	0	4	1	0	0	0	1	1	2	0	0	3	9
08:30 AM	1	0	0	0	1	0	1	0	0	1	0	0	0	0	0	0	1	0	0	1	3
08:45 AM	0	0	0	0	0	0	7	0	0	7	0	0	0	0	0	0	5	0	0	5	12
Total	2	0	0	0	2	0	13	0	0	13	1	0	0	0	1	1	11	0	0	12	28
09:00 AM	0	0	2	0	2	0	1	0	0	1	0	0	0	0	0	0	2	0	0	2	5
09:15 AM	0	0	0	0	0	0	2	0	0	2	0	0	0	0	0	0	1	0	0	1	3
09:30 AM	1	0	0	0	1	0	2	0	0	2	0	0	0	0	0	1	0	0	0	1	4
09:45 AM	0	0	0	0	0	0	1	0	0	1	0	0	0	0	0	1	3	0	0	4	5
Total	1	0	2	0	3	0	6	0	0	6	0	0	0	0	0	2	6	0	0	8	17
10:00 AM	0	0	1	0	1	0	3	0	0	3	0	0	0	0	0	0	5	0	0	5	9
10:15 AM	0	0	0	0	0	0	2	0	0	2	0	0	0	0	0	0	1	0	0	1	3
10:30 AM	0	0	0	0	0	0	3	0	0	3	0	0	0	0	0	0	2	0	0	2	5
10:45 AM	0	0	0	0	0	0	3	1	0	4	0	0	0	0	0	0	4	0	0	4	8
Total	0	0	1	0	1	0	11	1	0	12	0	0	0	0	0	0	12	0	0	12	25
11:00 AM	1	0	0	0	1	0	4	0	0	4	0	0	0	0	0	1	4	0	0	5	10
11:15 AM	0	0	0	0	0	0	4	0	0	4	0	0	0	0	0	0	5	1	0	6	10
11:30 AM	0	0	0	0	0	0	3	1	0	4	1	0	0	0	1	0	0	0	0	0	5
11:45 AM	0	0	0	0	0	0	2	0	0	2	1	0	0	0	1	0	2	0	0	2	5
Total	1	0	0	0	1	0	13	1	0	14	2	0	0	0	2	1	11	1	0	13	30
12:00 PM	0	0	3	0	3	0	2	0	0	2	0	0	0	0	0	0	2	0	0	2	7
12:15 PM	0	0	1	0	1	0	4	0	0	4	0	0	0	0	0	0	0	0	0	0	5
12:30 PM	0	0	0	0	0	0	2	1	0	3	0	0	0	0	0	0	0	0	0	0	3
12:45 PM	0	0	0	0	0	0	3	0	0	3	0	0	0	0	0	0	3	0	0	3	6
Total	0	0	4	0	4	0	11	1	0	12	0	0	0	0	0	0	5	0	0	5	21
01:00 PM	0	0	1	0	1	0	0	0	0	0	0	0	0	0	0	0	2	0	0	2	3
01:15 PM	0	0	0	0	0	0	1	0	0	1	0	0	0	0	0	0	1	0	0	1	2
01:30 PM	0	0	0	0	0	0	1	1	0	2	0	0	0	0	0	0	0	0	0	0	2
01:45 PM	0	0	0	0	0	0	1	0	0	1	0	0	0	0	0	0	2	0	0	2	3
Total	0	0	1	0	1	0	3	1	0	4	0	0	0	0	0	0	5	0	0	5	10
02:00 PM	0	0	1	0	1	0	0	0	0	0	0	0	0	0	0	0	2	0	0	2	3
02:15 PM	0	0	1	0	1	0	1	0	0	1	0	0	0	0	0	0	2	0	0	2	4
02:30 PM	0	0	0	0	0	0	1	0	0	1	0	0	0	0	0	1	0	1	0	2	3
02:45 PM	0	0	0	0	0	0	2	0	0	2	0	0	0	0	0	0	5	0	0	5	7
Total	0	0	2	0	2	0	4	0	0	4	0	0	0	0	0	1	9	1	0	11	17
03:00 PM	0	0	0	0	0	0	1	0	0	1	0	0	0	0	0	0	4	0	0	4	5
03:15 PM	0	0	0	0	0	0	3	0	0	3	0	0	0	0	0	0	1	1	0	2	5
03:30 PM	0	0	2	0	2	0	1	0	0	1	0	0	0	0	0	1	0	0	0	1	4

DocuSign Envelope ID: 5C03745C-4B01-4834-A65D-B77F558A4F46

Quality Counts

920 Blairhill Rd, Ste B-106
Charlotte, NC 28217

File Name : 15411717 - Skyland Inn Dr_Schenck Pkwy -- Long Shoals Rd
Site Code : 15411717
Start Date : 4/20/2021

Groups Printed- Classes 8, 9, 10

	Schenck Pkwy Southbound					Long Shoals Rd Westbound					Skyland Inn Dr Northbound					Long Shoals Rd Eastbound					
Start Time	Left	Thru	Right	U-Turn	App. Total	Left	Thru	Right	U-Turn	App. Total	Left	Thru	Right	U-Turn	App. Total	Left	Thru	Right	U-Turn	App. Total	Int. Total
03:45 PM	0	0	0	0	0	0	2	0	0	2	1	0	0	0	1	0	2	0	0	2	5
Total	0	0	2	0	2	0	7	0	0	7	1	0	0	0	1	1	7	1	0	9	19
04:00 PM	1	0	0	0	1	0	3	0	0	3	1	0	0	0	1	0	2	1	0	3	8
04:15 PM	0	0	1	0	1	0	1	0	0	1	0	0	0	0	0	0	0	0	0	0	2
04:30 PM	0	0	0	0	0	0	2	0	0	2	0	0	1	0	1	0	5	0	0	5	8
04:45 PM	0	0	0	0	0	0	2	0	0	2	0	0	0	0	0	0	1	0	0	1	3
Total	1	0	1	0	2	0	8	0	0	8	1	0	1	0	2	0	8	1	0	9	21
05:00 PM	0	0	0	0	0	0	1	0	0	1	0	0	0	0	0	0	1	0	0	1	2
05:15 PM	0	0	0	0	0	0	1	0	0	1	0	0	0	0	0	0	2	0	0	2	3
05:30 PM	0	0	0	0	0	0	1	0	0	1	0	0	0	0	0	0	1	0	0	1	2
05:45 PM	0	0	0	0	0	0	3	0	0	3	0	0	0	0	0	0	3	0	0	3	6
Total	0	0	0	0	0	0	6	0	0	6	0	0	0	0	0	0	7	0	0	7	13
06:00 PM	0	0	0	0	0	0	2	0	0	2	0	0	0	0	0	0	0	0	0	0	2
06:15 PM	0	0	0	0	0	0	0	0	0	0	0	0	0	0	0	0	5	0	0	5	5
06:30 PM	0	0	0	0	0	0	1	0	0	1	0	0	0	0	0	0	3	0	0	3	4
06:45 PM	0	0	0	0	0	0	0	0	0	0	0	0	0	0	0	0	0	0	0	0	0
Total	0	0	0	0	0	0	3	0	0	3	0	0	0	0	0	0	8	0	0	8	11
Grand Total	5	0	14	0	19	0	93	5	0	98	6	0	1	0	7	8	98	6	0	112	236
Apprch %	26.3	0	73.7	0		0	94.9	5.1	0		85.7	0	14.3	0		7.1	87.5	5.4	0		
Total %	2.1	0	5.9	0	8.1	0	39.4	2.1	0	41.5	2.5	0	0.4	0	3	3.4	41.5	2.5	0	47.5	

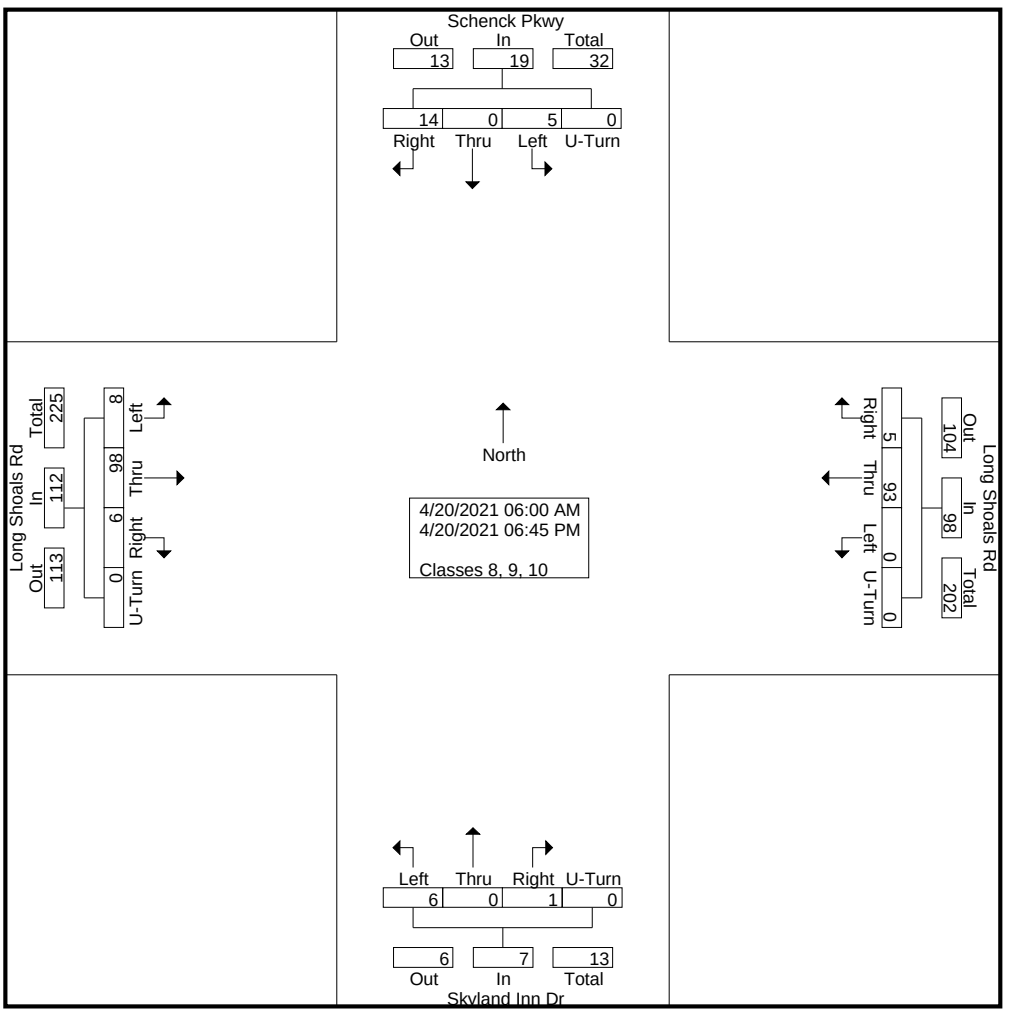

DocuSign Envelope ID: 5C03745C-4B01-4834-A65D-B77F558A4F46

Quality Counts

920 Blairhill Rd, Ste B-106
Charlotte, NC 28217

File Name : 15411717 - Skyland Inn Dr_Schenck Pkwy -- Long Shoals Rd
Site Code : 15411717
Start Date : 4/20/2021
Page No : 3

	Schenck Pkwy Southbound					Long Shoals Rd Westbound					Skyland Inn Dr Northbound					Long Shoals Rd Eastbound					
Start Time	Left	Thru	Right	U-Turn	App. Total	Left	Thru	Right	U-Turn	App. Total	Left	Thru	Right	U-Turn	App. Total	Left	Thru	Right	U-Turn	App. Total	Int. Total
Peak Hour Analysis From 06:00 AM to 11:45 AM - Peak 1 of 1																					
Peak Hour for Entire Intersection Begins at 10:30 AM																					
10:30 AM	0	0	0	0	0	0	3	0	0	3	0	0	0	0	0	0	2	0	0	2	5
10:45 AM	0	0	0	0	0	0	3	**1**	0	**4**	0	0	0	0	0	0	4	0	0	4	8
11:00 AM	**1**	0	0	0	**1**	0	**4**	0	0	4	0	0	0	0	0	**1**	4	0	0	5	**10**
11:15 AM	0	0	0	0	0	0	4	0	0	4	0	0	0	0	0	0	**5**	**1**	0	**6**	10
Total Volume	1	0	0	0	1	0	14	1	0	15	0	0	0	0	0	1	15	1	0	17	33
% App. Total	100	0	0	0		0	93.3	6.7	0		0	0	0	0		5.9	88.2	5.9	0		
PHF	.250	.000	.000	.000	.250	.000	.875	.250	.000	.938	.000	.000	.000	.000	.000	.250	.750	.250	.000	.708	.825

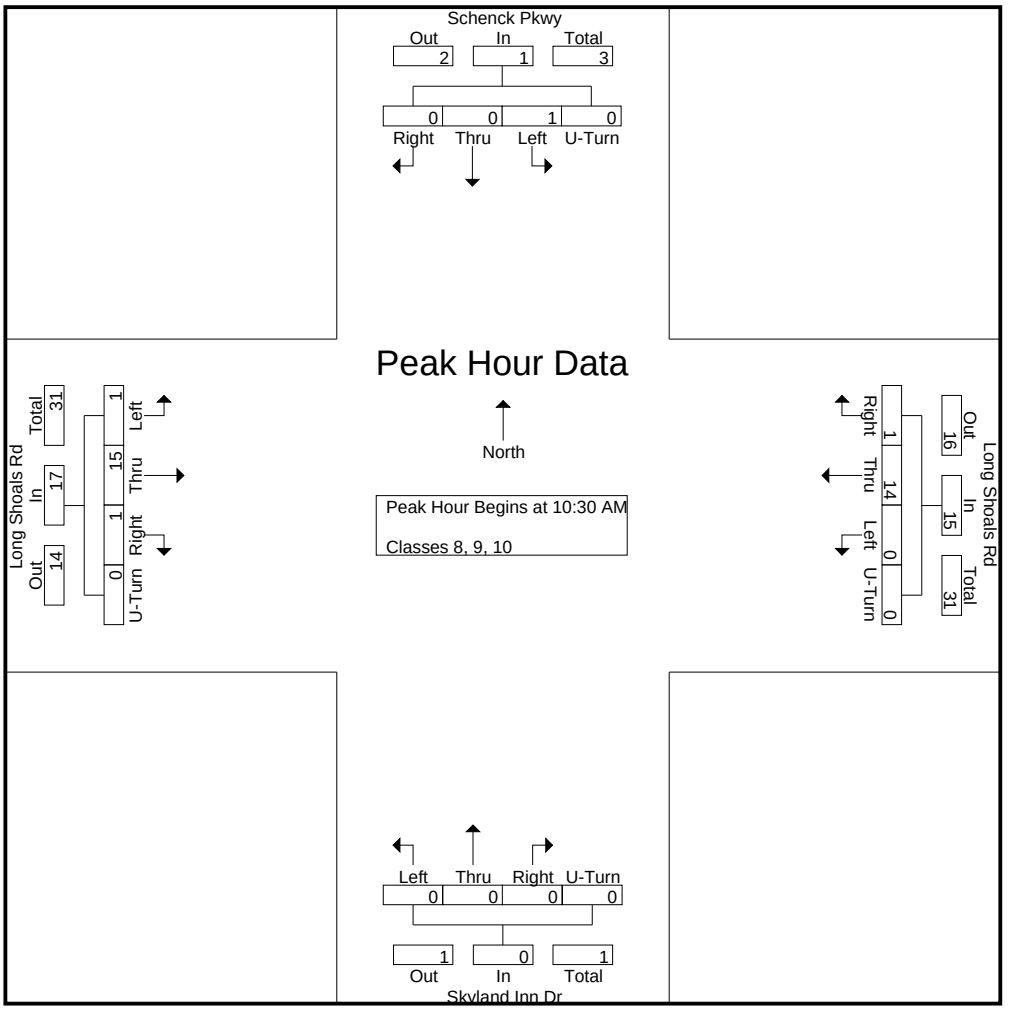

DocuSign Envelope ID: 5C03745C-4B01-4834-A65D-B77F558A4F46

Quality Counts

920 Blairhill Rd, Ste B-106
Charlotte, NC 28217

File Name : 15411717 - Skyland Inn Dr_Schenck Pkwy -- Long Shoals Rd
Site Code : 15411717
Start Date : 4/20/2021
Page No : 4

	Schenck Pkwy Southbound					Long Shoals Rd Westbound					Skyland Inn Dr Northbound					Long Shoals Rd Eastbound					
Start Time	Left	Thru	Right	U-Turn	App. Total	Left	Thru	Right	U-Turn	App. Total	Left	Thru	Right	U-Turn	App. Total	Left	Thru	Right	U-Turn	App. Total	Int. Total
Peak Hour Analysis From 12:00 PM to 06:45 PM - Peak 1 of 1																					
Peak Hour for Entire Intersection Begins at 03:45 PM																					
03:45 PM	0	0	0	0	0	0	2	0	0	2	**1**	0	0	0	**1**	0	2	0	0	2	5
04:00 PM	**1**	0	0	0	**1**	0	**3**	0	0	**3**	1	0	0	0	1	0	2	**1**	0	3	**8**
04:15 PM	0	0	**1**	0	1	0	1	0	0	1	0	0	0	0	0	0	0	0	0	0	2
04:30 PM	0	0	0	0	0	0	2	0	0	2	0	0	**1**	0	1	0	**5**	0	0	**5**	8
Total Volume	1	0	1	0	2	0	8	0	0	8	2	0	1	0	3	0	9	1	0	10	23
% App. Total	50	0	50	0		0	100	0	0		66.7	0	33.3	0		0	90	10	0		
PHF	.250	.000	.250	.000	.500	.000	.667	.000	.000	.667	.500	.000	.250	.000	.750	.000	.450	.250	.000	.500	.719

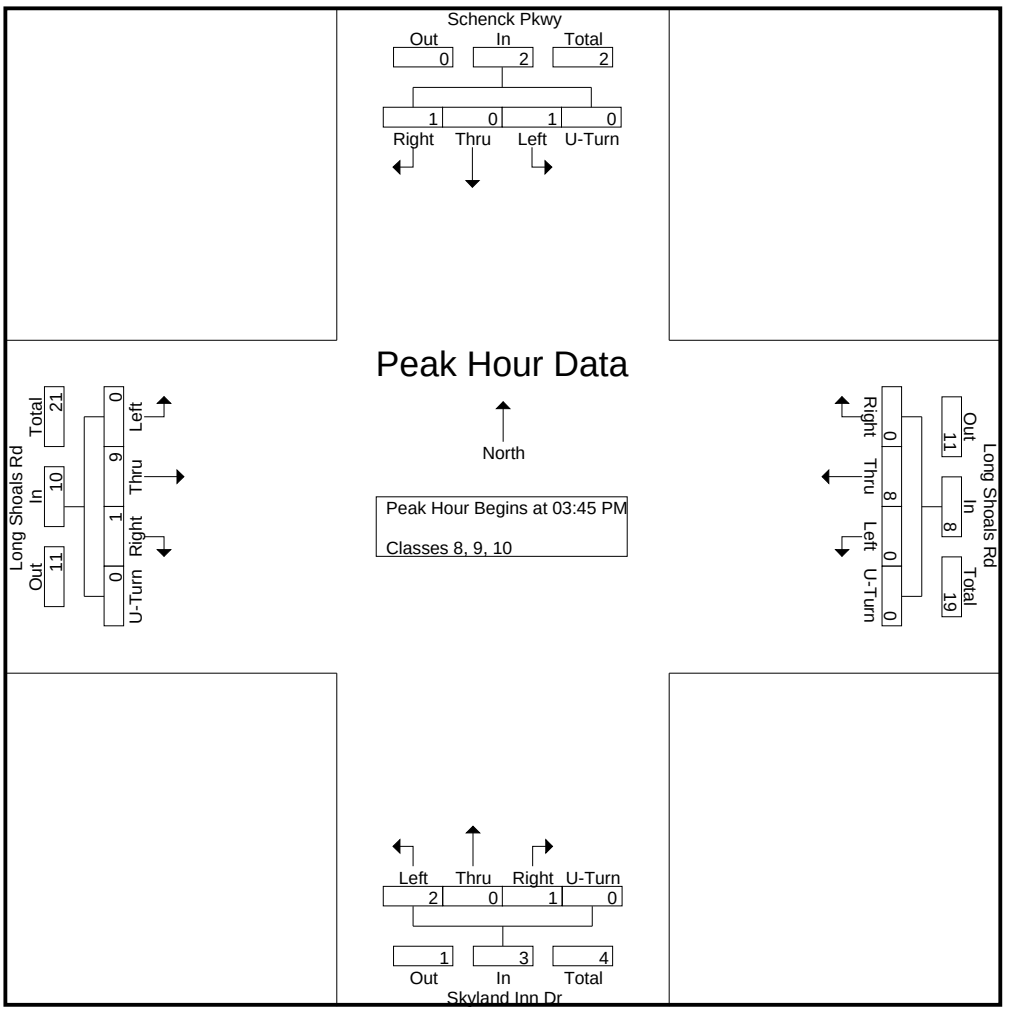

DocuSign Envelope ID: 5C03745C-4B01-4834-A65D-B77F558A4F46

Quality Counts

920 Blairhill Rd, Ste B-106
Charlotte, NC 28217

File Name : 15411717 - Skyland Inn Dr_Schenck Pkwy -- Long Shoals Rd
Site Code : 15411717
Start Date : 4/20/2021
Page No : 1

Groups Printed- Classes 11, 12, 13

	Schenck Pkwy Southbound					Long Shoals Rd Westbound					Skyland Inn Dr Northbound					Long Shoals Rd Eastbound					
Start Time	Left	Thru	Right	U-Turn	App. Total	Left	Thru	Right	U-Turn	App. Total	Left	Thru	Right	U-Turn	App. Total	Left	Thru	Right	U-Turn	App. Total	Int. Total
06:00 AM	0	0	0	0	0	0	0	0	0	0	0	0	0	0	0	0	0	0	0	0	0
06:15 AM	0	0	0	0	0	0	0	0	0	0	0	0	0	0	0	0	0	0	0	0	0
06:30 AM	0	0	0	0	0	0	0	0	0	0	0	0	0	0	0	0	2	0	0	2	2
06:45 AM	0	0	0	0	0	0	0	0	0	0	0	0	0	0	0	0	0	0	0	0	0
Total	0	0	0	0	0	0	0	0	0	0	0	0	0	0	0	0	2	0	0	2	2
07:00 AM	0	0	0	0	0	0	0	0	0	0	0	0	0	0	0	0	0	0	0	0	0
07:15 AM	0	0	0	0	0	0	0	0	0	0	0	0	0	0	0	0	0	0	0	0	0
07:30 AM	0	0	0	0	0	0	0	0	0	0	0	0	0	0	0	0	0	0	0	0	0
07:45 AM	0	0	0	0	0	0	0	0	0	0	0	0	0	0	0	0	0	0	0	0	0
Total	0	0	0	0	0	0	0	0	0	0	0	0	0	0	0	0	0	0	0	0	0
08:00 AM	0	0	0	0	0	0	0	0	0	0	0	0	0	0	0	0	0	0	0	0	0
08:15 AM	0	0	0	0	0	0	0	0	0	0	0	0	0	0	0	0	1	0	0	1	1
08:30 AM	0	0	0	0	0	0	0	0	0	0	0	0	0	0	0	0	0	0	0	0	0
08:45 AM	0	0	0	0	0	0	1	0	0	1	0	0	0	0	0	0	1	0	0	1	2
Total	0	0	0	0	0	0	1	0	0	1	0	0	0	0	0	0	2	0	0	2	3
09:00 AM	0	0	0	0	0	0	0	0	0	0	0	0	0	0	0	0	0	0	0	0	0
09:15 AM	0	0	0	0	0	0	1	0	0	1	0	0	0	0	0	0	0	0	0	0	1
09:30 AM	0	0	0	0	0	0	0	0	0	0	0	0	0	0	0	0	0	0	0	0	0
09:45 AM	0	0	0	0	0	0	0	0	0	0	0	0	0	0	0	0	0	0	0	0	0
Total	0	0	0	0	0	0	1	0	0	1	0	0	0	0	0	0	0	0	0	0	1
10:00 AM	0	0	0	0	0	0	0	0	0	0	0	0	0	0	0	0	0	0	0	0	0
10:15 AM	0	0	0	0	0	0	0	0	0	0	0	0	0	0	0	0	0	0	0	0	0
10:30 AM	0	0	0	0	0	0	0	0	0	0	0	0	0	0	0	0	0	0	0	0	0
10:45 AM	0	0	0	0	0	0	0	0	0	0	0	0	0	0	0	0	0	0	0	0	0
Total	0	0	0	0	0	0	0	0	0	0	0	0	0	0	0	0	0	0	0	0	0
11:00 AM	0	0	0	0	0	0	0	0	0	0	0	0	0	0	0	0	0	0	0	0	0
11:15 AM	0	0	0	0	0	0	0	0	0	0	0	0	0	0	0	0	0	0	0	0	0
11:30 AM	0	0	0	0	0	0	0	0	0	0	0	0	0	0	0	0	0	0	0	0	0
11:45 AM	0	0	0	0	0	0	0	0	0	0	0	0	0	0	0	0	0	0	0	0	0
Total	0	0	0	0	0	0	0	0	0	0	0	0	0	0	0	0	0	0	0	0	0
12:00 PM	0	0	0	0	0	0	0	0	0	0	0	0	0	0	0	0	0	0	0	0	0
12:15 PM	0	0	0	0	0	0	0	0	0	0	0	0	0	0	0	0	0	0	0	0	0
12:30 PM	0	0	0	0	0	0	0	0	0	0	0	0	0	0	0	0	0	0	0	0	0
12:45 PM	0	0	0	0	0	0	0	0	0	0	0	0	0	0	0	0	0	0	0	0	0
Total	0	0	0	0	0	0	0	0	0	0	0	0	0	0	0	0	0	0	0	0	0
01:00 PM	0	0	0	0	0	0	0	0	0	0	0	0	0	0	0	0	0	0	0	0	0
01:15 PM	0	0	0	0	0	0	0	0	0	0	0	0	0	0	0	0	0	0	0	0	0
01:30 PM	0	0	0	0	0	0	0	0	0	0	0	0	0	0	0	0	0	0	0	0	0
01:45 PM	0	0	0	0	0	0	0	0	0	0	0	0	0	0	0	0	0	0	0	0	0
Total	0	0	0	0	0	0	0	0	0	0	0	0	0	0	0	0	0	0	0	0	0
02:00 PM	0	0	0	0	0	0	0	0	0	0	0	0	0	0	0	0	0	0	0	0	0
02:15 PM	0	0	0	0	0	0	0	0	0	0	0	0	0	0	0	0	0	0	0	0	0
02:30 PM	0	0	0	0	0	0	0	0	0	0	0	0	0	0	0	0	0	0	0	0	0
02:45 PM	0	0	0	0	0	0	0	0	0	0	0	0	0	0	0	0	0	0	0	0	0
Total	0	0	0	0	0	0	0	0	0	0	0	0	0	0	0	0	0	0	0	0	0
03:00 PM	0	0	0	0	0	0	0	0	0	0	0	0	0	0	0	0	0	0	0	0	0
03:15 PM	0	0	0	0	0	0	0	0	0	0	0	0	0	0	0	0	0	0	0	0	0
03:30 PM	0	0	0	0	0	0	0	0	0	0	0	0	0	0	0	0	0	0	0	0	0

DocuSign Envelope ID: 5C03745C-4B01-4834-A65D-B77F558A4F46

Quality Counts

920 Blairhill Rd, Ste B-106
Charlotte, NC 28217

File Name : 15411717 - Skyland Inn Dr_Schenck Pkwy -- Long Shoals Rd
Site Code : 15411717
Start Date : 4/20/2021
Page No : 2

Groups Printed- Classes 11, 12, 13

	Schenck Pkwy Southbound					Long Shoals Rd Westbound					Skyland Inn Dr Northbound					Long Shoals Rd Eastbound					
Start Time	Left	Thru	Right	U-Turn	App. Total	Left	Thru	Right	U-Turn	App. Total	Left	Thru	Right	U-Turn	App. Total	Left	Thru	Right	U-Turn	App. Total	Int. Total
03:45 PM	0	0	0	0	0	0	0	0	0	0	0	0	0	0	0	0	0	0	0	0	0
Total	0	0	0	0	0	0	0	0	0	0	0	0	0	0	0	0	0	0	0	0	0
04:00 PM	0	0	0	0	0	0	0	0	0	0	0	0	0	0	0	0	0	0	0	0	0
04:15 PM	0	0	0	0	0	0	0	0	0	0	0	0	0	0	0	0	0	0	0	0	0
04:30 PM	0	0	0	0	0	0	0	0	0	0	0	0	0	0	0	0	0	0	0	0	0
04:45 PM	0	0	0	0	0	0	0	0	0	0	0	0	0	0	0	0	0	0	0	0	0
Total	0	0	0	0	0	0	0	0	0	0	0	0	0	0	0	0	0	0	0	0	0
05:00 PM	0	0	0	0	0	0	0	0	0	0	0	0	0	0	0	0	0	0	0	0	0
05:15 PM	0	0	0	0	0	0	0	0	0	0	0	0	0	0	0	0	0	0	0	0	0
05:30 PM	0	0	0	0	0	0	0	0	0	0	0	0	0	0	0	0	0	0	0	0	0
05:45 PM	0	0	0	0	0	0	0	0	0	0	0	0	0	0	0	0	0	0	0	0	0
Total	0	0	0	0	0	0	0	0	0	0	0	0	0	0	0	0	0	0	0	0	0
06:00 PM	0	0	0	0	0	0	0	0	0	0	0	0	0	0	0	0	0	0	0	0	0
06:15 PM	0	0	0	0	0	0	0	0	0	0	0	0	0	0	0	0	0	0	0	0	0
06:30 PM	0	0	0	0	0	0	0	0	0	0	0	0	0	0	0	0	0	0	0	0	0
06:45 PM	0	0	0	0	0	0	0	0	0	0	0	0	0	0	0	0	0	0	0	0	0
Total	0	0	0	0	0	0	0	0	0	0	0	0	0	0	0	0	0	0	0	0	0
Grand Total	0	0	0	0	0	0	2	0	0	2	0	0	0	0	0	0	4	0	0	4	6
Apprch %	0	0	0	0		0	100	0	0		0	0	0	0		0	100	0	0		
Total %	0	0	0	0	0	0	33.3	0	0	33.3	0	0	0	0	0	0	66.7	0	0	66.7	

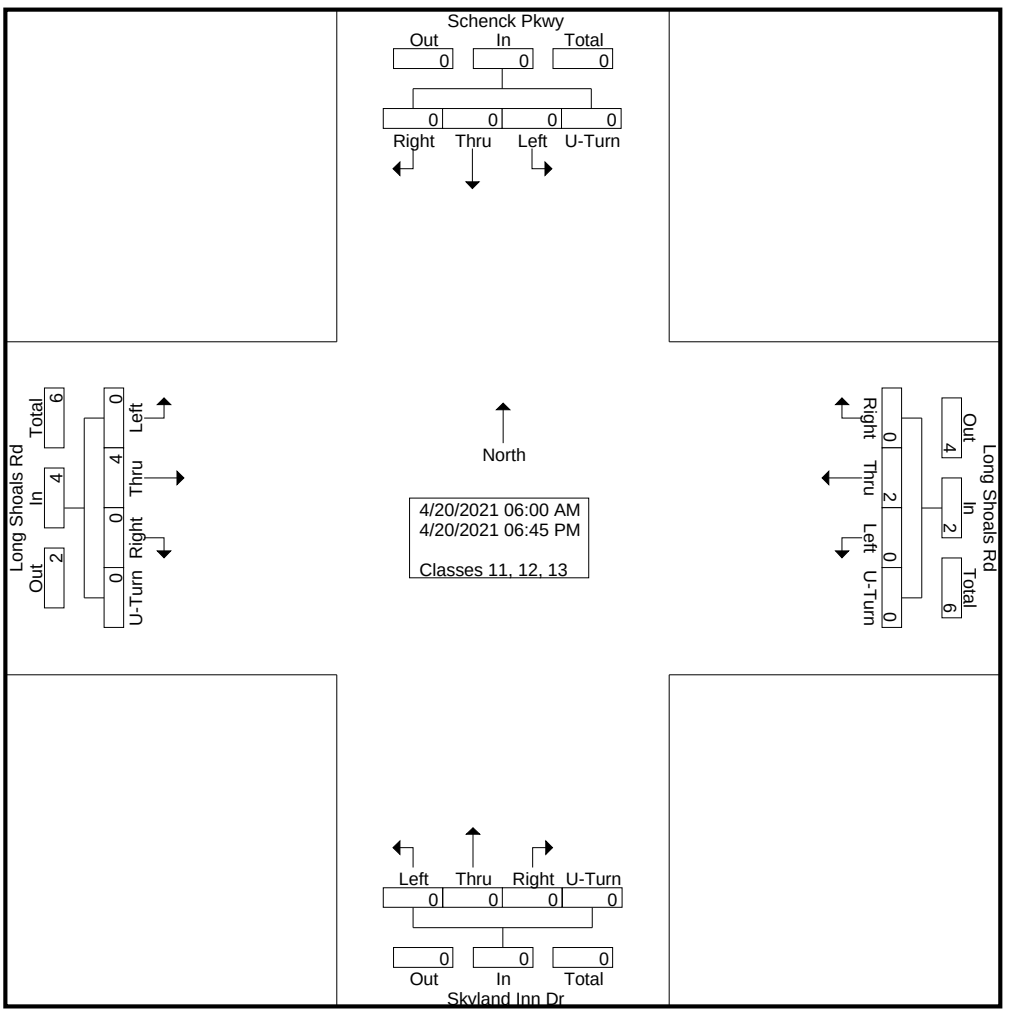

DocuSign Envelope ID: 5C03745C-4B01-4834-A65D-B77F558A4F46

Quality Counts

920 Blairhill Rd, Ste B-106
Charlotte, NC 28217

File Name : 15411717 - Skyland Inn Dr_Schenck Pkwy -- Long Shoals Rd
Site Code : 15411717
Start Date : 4/20/2021

	Schenck Pkwy Southbound					Long Shoals Rd Westbound					Skyland Inn Dr Northbound					Long Shoals Rd Eastbound					
Start Time	Left	Thru	Right	U-Turn	App. Total	Left	Thru	Right	U-Turn	App. Total	Left	Thru	Right	U-Turn	App. Total	Left	Thru	Right	U-Turn	App. Total	Int. Total
Peak Hour Analysis From 06:00 AM to 11:45 AM - Peak 1 of 1																					
Peak Hour for Entire Intersection Begins at 08:00 AM																					
08:00 AM	0	0	0	0	0	0	0	0	0	0	0	0	0	0	0	0	0	0	0	0	0
08:15 AM	0	0	0	0	0	0	0	0	0	0	0	0	0	0	0	0	**1**	0	0	**1**	1
08:30 AM	0	0	0	0	0	0	0	0	0	0	0	0	0	0	0	0	0	0	0	0	0
08:45 AM	0	0	0	0	0	0	**1**	0	0	**1**	0	0	0	0	0	0	1	0	0	1	**2**
Total Volume	0	0	0	0	0	0	1	0	0	1	0	0	0	0	0	0	2	0	0	2	3
% App. Total	0	0	0	0		0	100	0	0		0	0	0	0		0	100	0	0		
PHF	.000	.000	.000	.000	.000	.000	.250	.000	.000	.250	.000	.000	.000	.000	.000	.000	.500	.000	.000	.500	.375

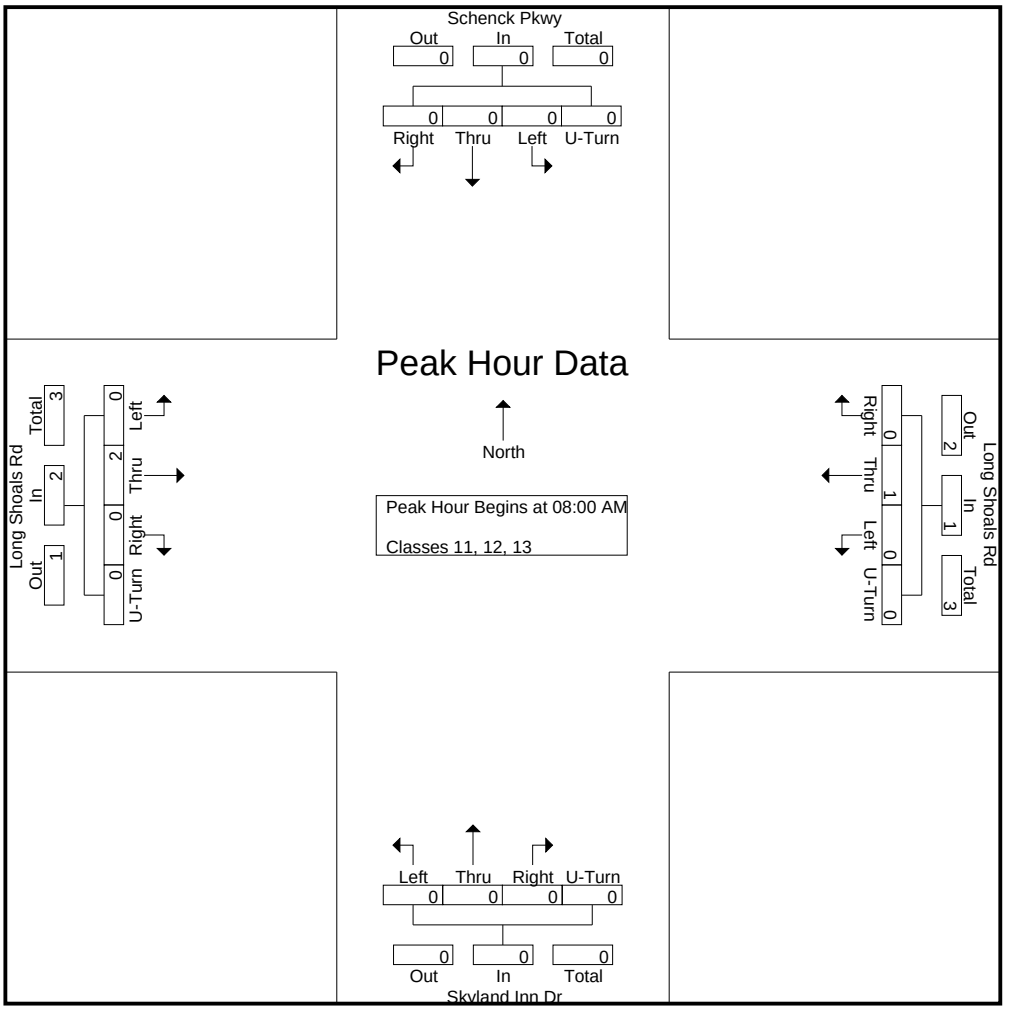

DocuSign Envelope ID: 5C03745C-4B01-4834-A65D-B77F558A4F46

Quality Counts

920 Blairhill Rd, Ste B-106
Charlotte, NC 28217

File Name : 15411717 - Skyland Inn Dr_Schenck Pkwy -- Long Shoals Rd
Site Code : 15411717
Start Date : 4/20/2021
Page No : 4

	Schenck Pkwy Southbound					Long Shoals Rd Westbound					Skyland Inn Dr Northbound					Long Shoals Rd Eastbound					
Start Time	Left	Thru	Right	U-Turn	App. Total	Left	Thru	Right	U-Turn	App. Total	Left	Thru	Right	U-Turn	App. Total	Left	Thru	Right	U-Turn	App. Total	Int. Total
Peak Hour Analysis From 12:00 PM to 06:45 PM - Peak 1 of 1																					
Peak Hour for Entire Intersection Begins at 12:00 PM																					
12:00 PM	0	0	0	0	0	0	0	0	0	0	0	0	0	0	0	0	0	0	0	0	0
12:15 PM	0	0	0	0	0	0	0	0	0	0	0	0	0	0	0	0	0	0	0	0	0
12:30 PM	0	0	0	0	0	0	0	0	0	0	0	0	0	0	0	0	0	0	0	0	0
12:45 PM	0	0	0	0	0	0	0	0	0	0	0	0	0	0	0	0	0	0	0	0	0
Total Volume	0	0	0	0	0	0	0	0	0	0	0	0	0	0	0	0	0	0	0	0	0
% App. Total	0	0	0	0		0	0	0	0		0	0	0	0		0	0	0	0		
PHF	.000	.000	.000	.000	.000	.000	.000	.000	.000	.000	.000	.000	.000	.000	.000	.000	.000	.000	.000	.000	.000

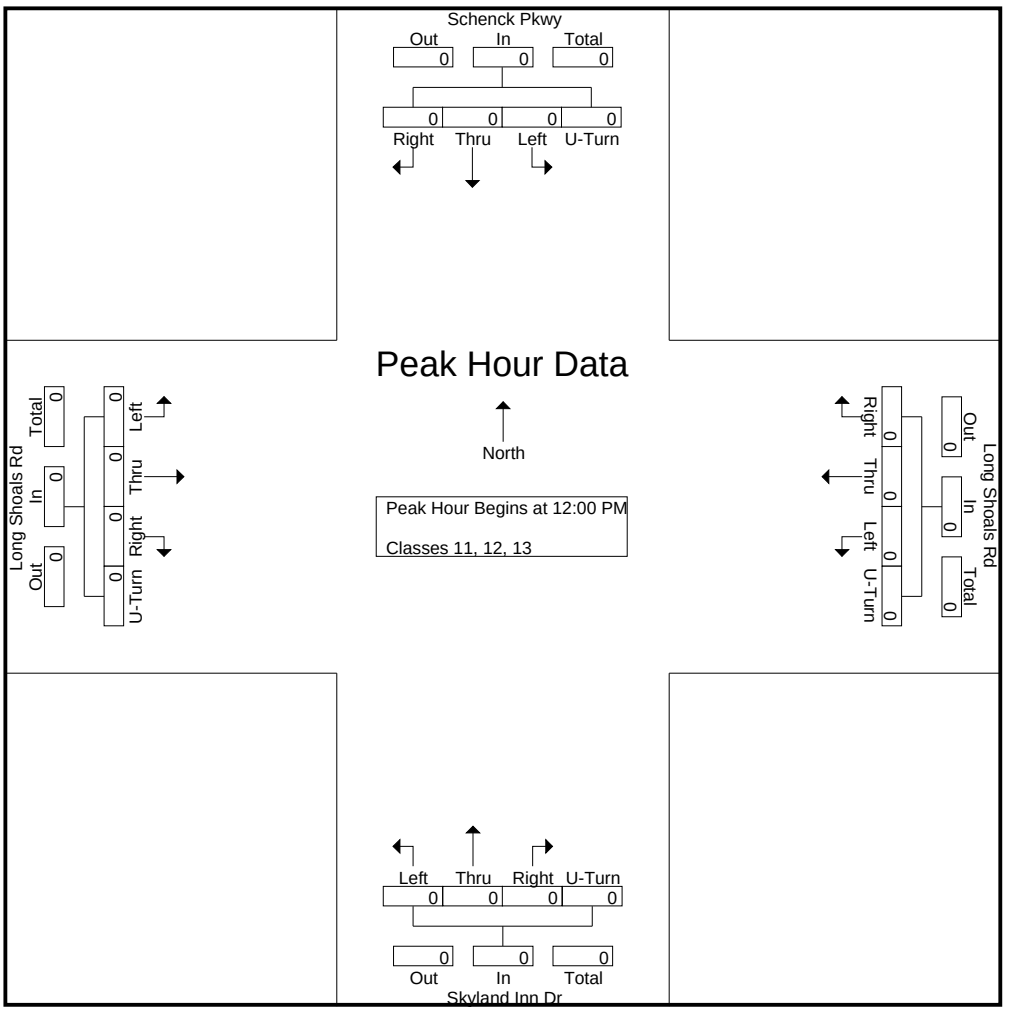

DocuSign Envelope ID: 5C03745C-4B01-4834-A65D-B77F558A4F46

Quality Counts

920 Blairhill Rd, Ste B-106
Charlotte, NC 28217

File Name : 15411717 - Skyland Inn Dr_Schenck Pkwy -- Long Shoals Rd
Site Code : 15411717
Start Date : 4/20/2021
Page No : 1

Groups Printed- Bikes, Peds

	Schenck Pkwy Southbound					Long Shoals Rd Westbound					Skyland Inn Dr Northbound					Long Shoals Rd Eastbound					
Start Time	Left	Thru	Right	Peds	App. Total	Left	Thru	Right	Peds	App. Total	Left	Thru	Right	Peds	App. Total	Left	Thru	Right	Peds	App. Total	Int. Total
06:00 AM	0	0	0	0	0	0	0	0	0	0	0	0	0	0	0	0	0	0	0	0	0
06:15 AM	0	0	0	0	0	0	0	0	0	0	0	0	0	0	0	0	0	0	0	0	0
06:30 AM	0	0	0	0	0	0	0	0	0	0	0	0	0	0	0	0	0	0	0	0	0
06:45 AM	0	0	0	0	0	0	0	0	0	0	0	0	0	0	0	0	0	0	0	0	0
Total	0	0	0	0	0	0	0	0	0	0	0	0	0	0	0	0	0	0	0	0	0
07:00 AM	0	0	0	0	0	0	0	0	0	0	0	0	0	0	0	0	0	0	0	0	0
07:15 AM	0	0	0	0	0	0	0	0	0	0	0	0	0	0	0	0	0	0	0	0	0
07:30 AM	0	0	0	0	0	0	0	0	0	0	0	0	0	0	0	0	0	0	0	0	0
07:45 AM	0	0	0	0	0	0	0	0	0	0	0	0	0	0	0	0	0	0	0	0	0
Total	0	0	0	0	0	0	0	0	0	0	0	0	0	0	0	0	0	0	0	0	0
08:00 AM	0	0	0	0	0	0	0	0	0	0	0	0	0	0	0	0	0	0	0	0	0
08:15 AM	0	0	0	0	0	0	0	0	0	0	0	0	0	0	0	0	0	0	0	0	0
08:30 AM	0	0	0	0	0	0	0	0	0	0	0	0	0	0	0	0	0	0	0	0	0
08:45 AM	0	0	0	0	0	0	0	0	0	0	0	0	0	0	0	0	0	0	0	0	0
Total	0	0	0	0	0	0	0	0	0	0	0	0	0	0	0	0	0	0	0	0	0
09:00 AM	0	0	0	0	0	0	0	0	0	0	0	0	0	0	0	0	0	0	0	0	0
09:15 AM	0	0	0	0	0	0	0	0	0	0	0	0	0	0	0	0	0	0	0	0	0
09:30 AM	0	0	0	0	0	0	0	0	0	0	0	0	0	0	0	0	0	0	0	0	0
09:45 AM	0	0	0	0	0	0	0	0	0	0	0	0	0	0	0	0	0	0	0	0	0
Total	0	0	0	0	0	0	0	0	0	0	0	0	0	0	0	0	0	0	0	0	0
10:00 AM	0	0	0	0	0	0	0	0	0	0	0	0	0	0	0	0	0	0	0	0	0
10:15 AM	0	0	0	0	0	0	0	0	0	0	0	0	0	0	0	0	0	0	0	0	0
10:30 AM	0	0	0	0	0	0	0	0	0	0	0	0	0	0	0	0	0	0	0	0	0
10:45 AM	0	0	0	0	0	0	0	0	0	0	0	0	0	0	0	0	0	0	0	0	0
Total	0	0	0	0	0	0	0	0	0	0	0	0	0	0	0	0	0	0	0	0	0
11:00 AM	0	0	0	0	0	0	0	0	0	0	0	0	0	0	0	0	0	0	0	0	0
11:15 AM	0	0	0	0	0	0	0	0	0	0	0	0	0	0	0	0	0	0	0	0	0
11:30 AM	0	0	0	0	0	0	0	0	0	0	0	0	0	0	0	0	0	0	0	0	0
11:45 AM	0	0	0	0	0	0	0	0	0	0	0	0	0	0	0	0	0	0	0	0	0
Total	0	0	0	0	0	0	0	0	0	0	0	0	0	0	0	0	0	0	0	0	0
12:00 PM	0	0	0	0	0	0	0	0	0	0	0	0	0	2	2	0	0	0	0	0	2
12:15 PM	0	0	0	0	0	0	0	0	0	0	0	0	0	8	8	0	0	0	0	0	8
12:30 PM	0	0	0	0	0	0	0	0	0	0	0	0	0	6	6	1	0	0	0	1	7
12:45 PM	0	0	0	0	0	0	0	0	0	0	0	0	0	0	0	0	0	0	0	0	0
Total	0	0	0	0	0	0	0	0	0	0	0	0	0	16	16	1	0	0	0	1	17
01:00 PM	0	0	0	0	0	0	0	0	0	0	0	0	0	0	0	0	0	0	0	0	0
01:15 PM	0	0	0	0	0	0	0	0	0	0	0	0	0	0	0	0	0	0	0	0	0
01:30 PM	0	0	0	0	0	0	0	0	0	0	0	0	0	0	0	0	0	0	0	0	0
01:45 PM	0	0	0	0	0	0	0	0	0	0	0	0	0	0	0	0	0	0	0	0	0
Total	0	0	0	0	0	0	0	0	0	0	0	0	0	0	0	0	0	0	0	0	0
02:00 PM	0	0	0	0	0	0	0	0	0	0	0	0	0	0	0	0	0	0	0	0	0
02:15 PM	0	0	0	0	0	0	0	0	0	0	0	0	0	0	0	0	0	0	0	0	0
02:30 PM	0	0	0	0	0	0	0	0	0	0	0	0	0	1	1	0	0	0	0	0	1
02:45 PM	0	0	0	0	0	0	0	0	1	1	0	0	0	2	2	0	0	0	0	0	3
Total	0	0	0	0	0	0	0	0	1	1	0	0	0	3	3	0	0	0	0	0	4
03:00 PM	0	0	0	0	0	0	0	0	0	0	0	0	0	0	0	0	0	0	0	0	0
03:15 PM	0	0	0	0	0	0	0	0	0	0	0	0	0	0	0	0	0	0	0	0	0
03:30 PM	0	0	0	0	0	0	0	0	2	2	0	0	0	2	2	0	0	0	0	0	4

DocuSign Envelope ID: 5C03745C-4B01-4834-A65D-B77F558A4F46

Quality Counts

920 Blairhill Rd, Ste B-106
Charlotte, NC 28217

File Name : 15411717 - Skyland Inn Dr_Schenck Pkwy -- Long Shoals Rd
Site Code : 15411717
Start Date : 4/20/2021

Groups Printed- Bikes, Peds

	Schenck Pkwy Southbound					Long Shoals Rd Westbound					Skyland Inn Dr Northbound					Long Shoals Rd Eastbound					
Start Time	Left	Thru	Right	Peds	App. Total	Left	Thru	Right	Peds	App. Total	Left	Thru	Right	Peds	App. Total	Left	Thru	Right	Peds	App. Total	Int. Total
03:45 PM	0	0	0	0	0	0	0	0	0	0	0	0	0	0	0	0	0	0	0	0	0
Total	0	0	0	0	0	0	0	0	2	2	0	0	0	2	2	0	0	0	0	0	4
04:00 PM	0	0	0	0	0	0	0	0	0	0	0	0	0	1	1	0	0	0	0	0	1
04:15 PM	0	0	0	1	1	0	0	0	0	0	0	0	0	0	0	0	0	0	0	0	1
04:30 PM	0	0	0	1	1	0	0	0	1	1	0	0	0	0	0	0	0	0	0	0	2
04:45 PM	0	0	0	0	0	0	0	0	0	0	0	0	0	0	0	0	0	0	0	0	0
Total	0	0	0	2	2	0	0	0	1	1	0	0	0	1	1	0	0	0	0	0	4
05:00 PM	0	0	0	0	0	0	0	0	0	0	0	0	0	0	0	0	0	0	0	0	0
05:15 PM	0	0	0	0	0	0	0	0	0	0	0	0	0	0	0	0	0	0	0	0	0
05:30 PM	0	0	0	1	1	0	0	0	0	0	0	0	0	0	0	0	0	0	0	0	1
05:45 PM	0	0	0	0	0	0	0	0	0	0	0	0	0	0	0	0	0	0	0	0	0
Total	0	0	0	1	1	0	0	0	0	0	0	0	0	0	0	0	0	0	0	0	1
06:00 PM	0	0	0	0	0	0	0	0	0	0	0	0	0	0	0	0	0	0	0	0	0
06:15 PM	0	0	0	0	0	0	0	0	0	0	0	0	0	0	0	0	0	0	0	0	0
06:30 PM	0	0	0	0	0	0	0	0	0	0	0	0	0	0	0	0	0	0	0	0	0
06:45 PM	0	0	0	0	0	0	0	0	0	0	0	0	0	0	0	0	0	0	0	0	0
Total	0	0	0	0	0	0	0	0	0	0	0	0	0	0	0	0	0	0	0	0	0
Grand Total	0	0	0	3	3	0	0	0	4	4	0	0	0	22	22	1	0	0	0	1	30
Apprch %	0	0	0	100		0	0	0	100		0	0	0	100		100	0	0	0		
Total %	0	0	0	10	10	0	0	0	13.3	13.3	0	0	0	73.3	73.3	3.3	0	0	0	3.3	

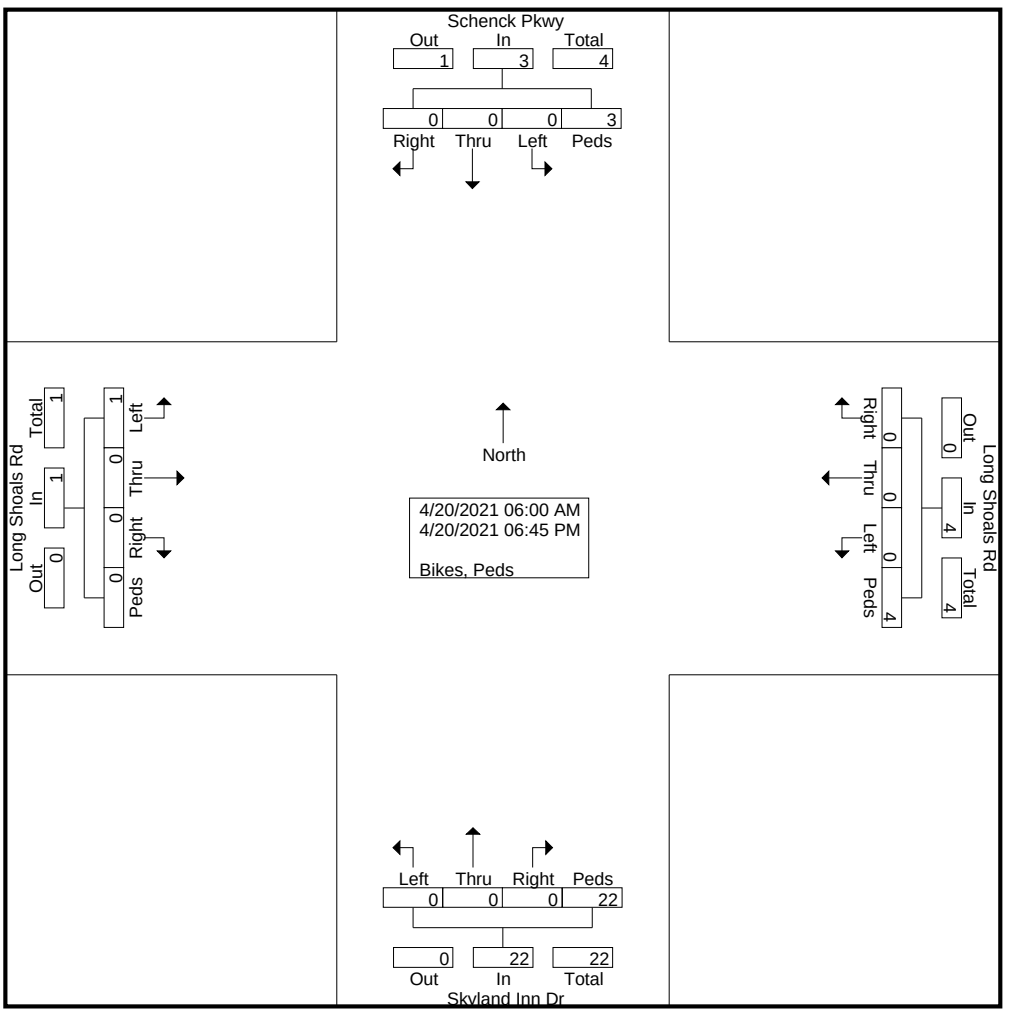

DocuSign Envelope ID: 5C03745C-4B01-4834-A65D-B77F558A4F46

Quality Counts

920 Blairhill Rd, Ste B-106
Charlotte, NC 28217

File Name : 15411717 - Skyland Inn Dr_Schenck Pkwy -- Long Shoals Rd
Site Code : 15411717
Start Date : 4/20/2021

	Schenck Pkwy Southbound					Long Shoals Rd Westbound					Skyland Inn Dr Northbound					Long Shoals Rd Eastbound					
Start Time	Left	Thru	Right	Peds	App. Total	Left	Thru	Right	Peds	App. Total	Left	Thru	Right	Peds	App. Total	Left	Thru	Right	Peds	App. Total	Int. Total
Peak Hour Analysis From 06:00 AM to 11:45 AM - Peak 1 of 1																					
Peak Hour for Entire Intersection Begins at 06:00 AM																					
06:00 AM	0	0	0	0	0	0	0	0	0	0	0	0	0	0	0	0	0	0	0	0	0
06:15 AM	0	0	0	0	0	0	0	0	0	0	0	0	0	0	0	0	0	0	0	0	0
06:30 AM	0	0	0	0	0	0	0	0	0	0	0	0	0	0	0	0	0	0	0	0	0
06:45 AM	0	0	0	0	0	0	0	0	0	0	0	0	0	0	0	0	0	0	0	0	0
Total Volume	0	0	0	0	0	0	0	0	0	0	0	0	0	0	0	0	0	0	0	0	0
% App. Total	0	0	0	0		0	0	0	0		0	0	0	0		0	0	0	0		
PHF	.000	.000	.000	.000	.000	.000	.000	.000	.000	.000	.000	.000	.000	.000	.000	.000	.000	.000	.000	.000	.000

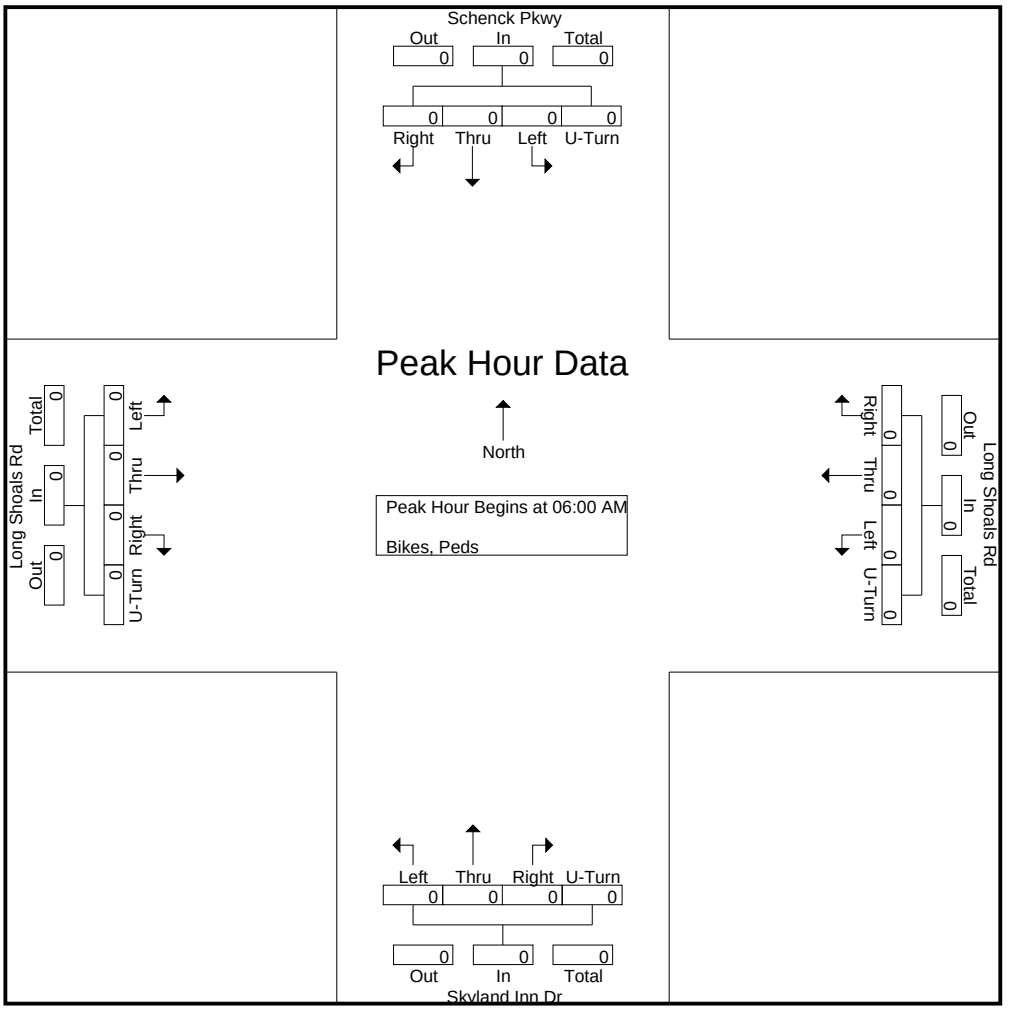

DocuSign Envelope ID: 5C03745C-4B01-4834-A65D-B77F558A4F46

Quality Counts

920 Blairhill Rd, Ste B-106
Charlotte, NC 28217

File Name : 15411717 - Skyland Inn Dr_Schenck Pkwy -- Long Shoals Rd
Site Code : 15411717
Start Date : 4/20/2021
Page No : 4

	Schenck Pkwy Southbound					Long Shoals Rd Westbound					Skyland Inn Dr Northbound					Long Shoals Rd Eastbound					
Start Time	Left	Thru	Right	Peds	App. Total	Left	Thru	Right	Peds	App. Total	Left	Thru	Right	Peds	App. Total	Left	Thru	Right	Peds	App. Total	Int. Total
Peak Hour Analysis From 12:00 PM to 06:45 PM - Peak 1 of 1																					
Peak Hour for Entire Intersection Begins at 12:00 PM																					
12:00 PM	0	0	0	0	0	0	0	0	0	0	0	0	0	2	2	0	0	0	0	0	2
12:15 PM	0	0	0	0	0	0	0	0	0	0	0	0	0	**8**	**8**	0	0	0	0	0	**8**
12:30 PM	0	0	0	0	0	0	0	0	0	0	0	0	0	6	6	**1**	0	0	0	**1**	7
12:45 PM	0	0	0	0	0	0	0	0	0	0	0	0	0	0	0	0	0	0	0	0	0
Total Volume	0	0	0	0	0	0	0	0	0	0	0	0	0	16	16	1	0	0	0	1	17
% App. Total	0	0	0	0		0	0	0	0		0	0	0	100		100	0	0	0		
PHF	.000	.000	.000	.000	.000	.000	.000	.000	.000	.000	.000	.000	.000	.500	.500	.250	.000	.000	.000	.250	.531

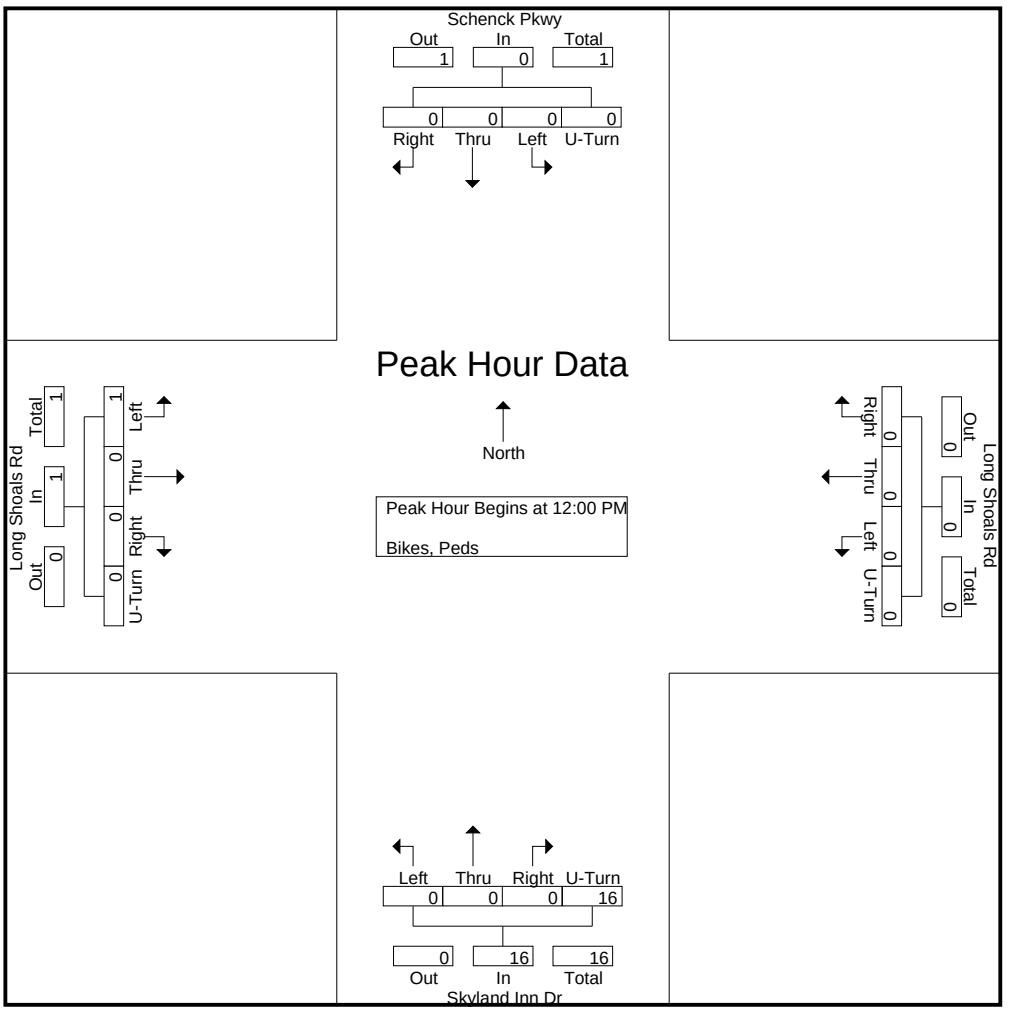

DocuSign Envelope ID: 5C03745C-4B01-4834-A65D-B77F558A4F46

QUALITY COUNTS LLC
920 Blairhill Rd, Suite 106, Charlotte, NC 28217
704.215.4616

Count Number: 15411718
County: Buncombe
City: Asheville
Division: 13

Location: I-26 N of Brevard Rd
General Location Type: Mainline
Count Type: Turning Movement (Classification)
Count Start Date: 4/20/2021
Time: 6:00 AM – 8:00 PM
Volume: 64,671

Maximum Temperature: 69° F
Minimum Temperature: 40° F
Precipitation: 0.00 in
Snowfall: 0.0 in
Average Sky Cover: 0.2
Weather Conditions: Clear

1. **School in Session:** Yes
2. **Pedestrians Counted**: Yes
3. **Disabled Pedestrians Present**: No
   Description and Approaches Used: N/A
4. **Counted By**: Eric Rogowski
5. **Data Processor**: Jon B
6. **Signal Inventory**: N/A
7. **Data Collection Method**: Video/Count Board
8. **Equipment Operating Properly**: Yes
9. **Area Lighting Present**: Yes
10. **Nearest Roadway Stop Sign < 300 ft:** No
    If yes, list approaches: N/A
11. **Nearest Traffic Signal < 300 ft:** No
    If yes, list approaches: N/A
12. **At-Grade Railroad Crossing Present (<200 ft):** No
    If yes, list approaches & distance: N/A
13. **Other:**

↑ North

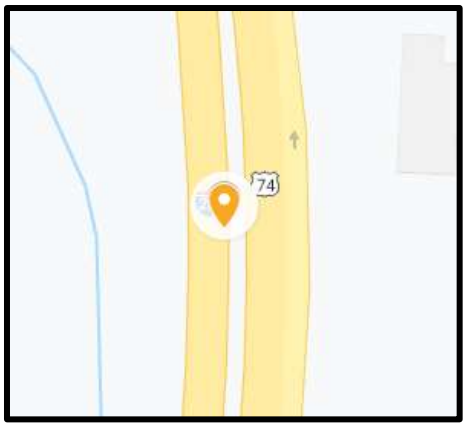

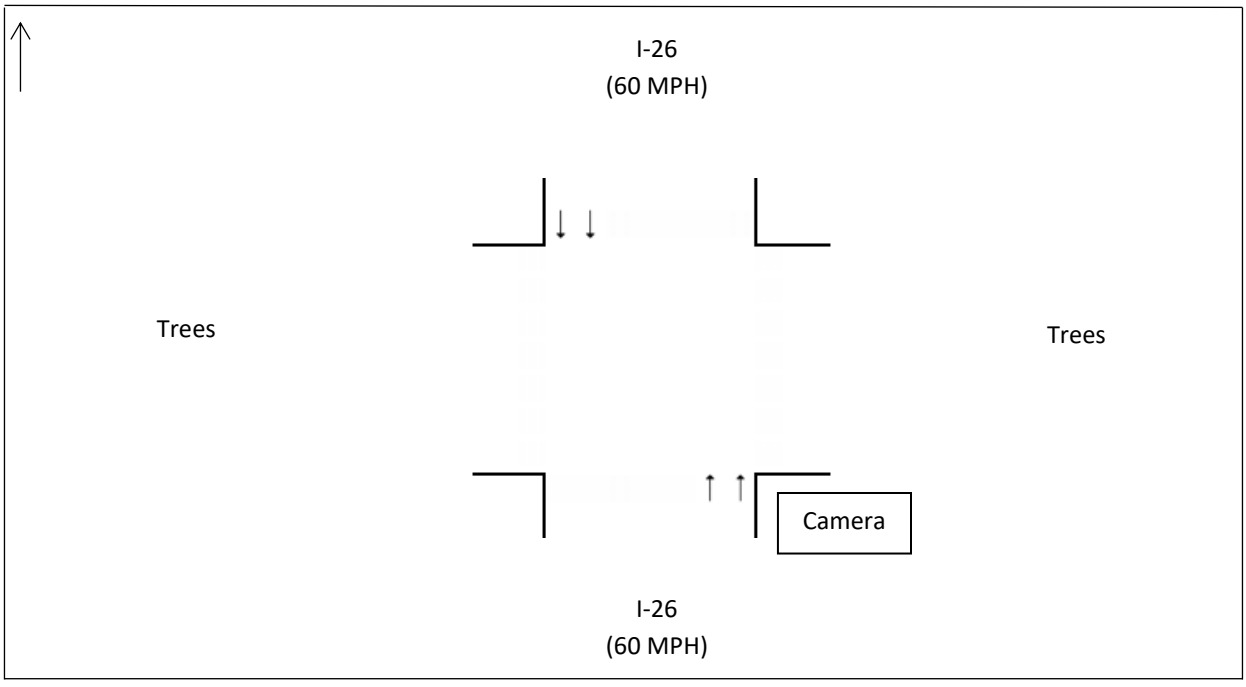

DocuSign Envelope ID: 5C03745C-4B01-4834-A65D-B77F558A4F46

Quality Counts

920 Blairhill Rd, Ste B-106
Charlotte, NC 28217

File Name : 15411718 - I-26 N of Brevard Rd
Site Code : 15411718
Start Date : 4/20/2021
Page No : 1

Groups Printed- Classes 1, 2, 3 - Classes 4, 5, 6, 7 - Classes 8, 9, 10 - Classes 11, 12, 13

	I-26 Southbound					Westbound					I-26 Northbound					Eastbound					
Start Time	Left	Thru	Right	U-Turn	App. Total	Left	Thru	Right	U-Turn	App. Total	Left	Thru	Right	U-Turn	App. Total	Left	Thru	Right	U-Turn	App. Total	Int. Total
06:00 AM	0	293	0	0	293	0	0	0	0	0	0	210	0	0	210	0	0	0	0	0	503
06:15 AM	0	426	0	0	426	0	0	0	0	0	0	299	0	0	299	0	0	0	0	0	725
06:30 AM	0	615	0	0	615	0	0	0	0	0	0	317	0	0	317	0	0	0	0	0	932
06:45 AM	0	498	0	0	498	0	0	0	0	0	0	360	0	0	360	0	0	0	0	0	858
Total	0	1832	0	0	1832	0	0	0	0	0	0	1186	0	0	1186	0	0	0	0	0	3018
07:00 AM	0	554	0	0	554	0	0	0	0	0	0	437	0	0	437	0	0	0	0	0	991
07:15 AM	0	746	0	0	746	0	0	0	0	0	0	560	0	0	560	0	0	0	0	0	1306
07:30 AM	0	832	0	0	832	0	0	0	0	0	0	579	0	0	579	0	0	0	0	0	1411
07:45 AM	0	764	0	0	764	0	0	0	0	0	0	642	0	0	642	0	0	0	0	0	1406
Total	0	2896	0	0	2896	0	0	0	0	0	0	2218	0	0	2218	0	0	0	0	0	5114
08:00 AM	0	663	0	0	663	0	0	0	0	0	0	586	0	0	586	0	0	0	0	0	1249
08:15 AM	0	666	0	0	666	0	0	0	0	0	0	630	0	0	630	0	0	0	0	0	1296
08:30 AM	0	673	0	0	673	0	0	0	0	0	0	654	0	0	654	0	0	0	0	0	1327
08:45 AM	0	674	0	0	674	0	0	0	0	0	0	465	0	0	465	0	0	0	0	0	1139
Total	0	2676	0	0	2676	0	0	0	0	0	0	2335	0	0	2335	0	0	0	0	0	5011
09:00 AM	0	562	0	0	562	0	0	0	0	0	0	426	0	0	426	0	0	0	0	0	988
09:15 AM	0	569	0	0	569	0	0	0	0	0	0	447	0	0	447	0	0	0	0	0	1016
09:30 AM	0	632	0	0	632	0	0	0	0	0	0	424	0	0	424	0	0	0	0	0	1056
09:45 AM	0	599	0	0	599	0	0	0	0	0	0	501	0	0	501	0	0	0	0	0	1100
Total	0	2362	0	0	2362	0	0	0	0	0	0	1798	0	0	1798	0	0	0	0	0	4160
10:00 AM	0	544	0	0	544	0	0	0	0	0	0	540	0	0	540	0	0	0	0	0	1084
10:15 AM	0	479	0	0	479	0	0	0	0	0	0	522	0	0	522	0	0	0	0	0	1001
10:30 AM	0	497	0	0	497	0	0	0	0	0	0	538	0	0	538	0	0	0	0	0	1035
10:45 AM	0	601	0	0	601	0	0	0	0	0	0	541	0	0	541	0	0	0	0	0	1142
Total	0	2121	0	0	2121	0	0	0	0	0	0	2141	0	0	2141	0	0	0	0	0	4262
11:00 AM	0	610	0	0	610	0	0	0	0	0	0	552	0	0	552	0	0	0	0	0	1162
11:15 AM	0	584	0	0	584	0	0	0	0	0	0	577	0	0	577	0	0	0	0	0	1161
11:30 AM	0	607	0	0	607	0	0	0	0	0	0	616	0	0	616	0	0	0	0	0	1223
11:45 AM	0	576	0	0	576	0	0	0	0	0	0	615	0	0	615	0	0	0	0	0	1191
Total	0	2377	0	0	2377	0	0	0	0	0	0	2360	0	0	2360	0	0	0	0	0	4737
12:00 PM	0	637	0	0	637	0	0	0	0	0	0	563	0	0	563	0	0	0	0	0	1200
12:15 PM	0	693	0	0	693	0	0	0	0	0	0	539	0	0	539	0	0	0	0	0	1232
12:30 PM	0	608	0	0	608	0	0	0	0	0	0	606	0	0	606	0	0	0	0	0	1214
12:45 PM	0	616	0	0	616	0	0	0	0	0	0	612	0	0	612	0	0	0	0	0	1228
Total	0	2554	0	0	2554	0	0	0	0	0	0	2320	0	0	2320	0	0	0	0	0	4874
01:00 PM	0	605	0	0	605	0	0	0	0	0	0	499	0	0	499	0	0	0	0	0	1104
01:15 PM	0	615	0	0	615	0	0	0	0	0	0	609	0	0	609	0	0	0	0	0	1224
01:30 PM	0	632	0	0	632	0	0	0	0	0	0	621	0	0	621	0	0	0	0	0	1253
01:45 PM	0	652	0	0	652	0	0	0	0	0	0	598	0	0	598	0	0	0	0	0	1250
Total	0	2504	0	0	2504	0	0	0	0	0	0	2327	0	0	2327	0	0	0	0	0	4831
02:00 PM	0	665	0	0	665	0	0	0	0	0	0	593	0	0	593	0	0	0	0	0	1258
02:15 PM	0	690	0	0	690	0	0	0	0	0	0	634	0	0	634	0	0	0	0	0	1324
02:30 PM	0	635	0	0	635	0	0	0	0	0	0	675	0	0	675	0	0	0	0	0	1310
02:45 PM	0	680	0	0	680	0	0	0	0	0	0	669	0	0	669	0	0	0	0	0	1349
Total	0	2670	0	0	2670	0	0	0	0	0	0	2571	0	0	2571	0	0	0	0	0	5241
03:00 PM	0	642	0	0	642	0	0	0	0	0	0	632	0	0	632	0	0	0	0	0	1274
03:15 PM	0	682	0	0	682	0	0	0	0	0	0	613	0	0	613	0	0	0	0	0	1295
03:30 PM	0	705	0	0	705	0	0	0	0	0	0	752	0	0	752	0	0	0	0	0	1457

DocuSign Envelope ID: 5C03745C-4B01-4834-A65D-B77F558A4F46

Quality Counts

920 Blairhill Rd, Ste B-106
Charlotte, NC 28217

File Name : 15411718 - I-26 N of Brevard Rd
Site Code : 15411718
Start Date : 4/20/2021

Groups Printed- Classes 1, 2, 3 - Classes 4, 5, 6, 7 - Classes 8, 9, 10 - Classes 11, 12, 13

	I-26 Southbound					Westbound					I-26 Northbound					Eastbound					
Start Time	Left	Thru	Right	U-Turn	App. Total	Left	Thru	Right	U-Turn	App. Total	Left	Thru	Right	U-Turn	App. Total	Left	Thru	Right	U-Turn	App. Total	Int. Total
03:45 PM	0	724	0	0	724	0	0	0	0	0	0	689	0	0	689	0	0	0	0	0	1413
Total	0	2753	0	0	2753	0	0	0	0	0	0	2686	0	0	2686	0	0	0	0	0	5439
04:00 PM	0	716	0	0	716	0	0	0	0	0	0	684	0	0	684	0	0	0	0	0	1400
04:15 PM	0	704	0	0	704	0	0	0	0	0	0	740	0	0	740	0	0	0	0	0	1444
04:30 PM	0	689	0	0	689	0	0	0	0	0	0	656	0	0	656	0	0	0	0	0	1345
04:45 PM	0	704	0	0	704	0	0	0	0	0	0	690	0	0	690	0	0	0	0	0	1394
Total	0	2813	0	0	2813	0	0	0	0	0	0	2770	0	0	2770	0	0	0	0	0	5583
05:00 PM	0	753	0	0	753	0	0	0	0	0	0	753	0	0	753	0	0	0	0	0	1506
05:15 PM	0	794	0	0	794	0	0	0	0	0	0	752	0	0	752	0	0	0	0	0	1546
05:30 PM	0	702	0	0	702	0	0	0	0	0	0	688	0	0	688	0	0	0	0	0	1390
05:45 PM	0	630	0	0	630	0	0	0	0	0	0	674	0	0	674	0	0	0	0	0	1304
Total	0	2879	0	0	2879	0	0	0	0	0	0	2867	0	0	2867	0	0	0	0	0	5746
06:00 PM	0	563	0	0	563	0	0	0	0	0	0	582	0	0	582	0	0	0	0	0	1145
06:15 PM	0	551	0	0	551	0	0	0	0	0	0	593	0	0	593	0	0	0	0	0	1144
06:30 PM	0	468	0	0	468	0	0	0	0	0	0	492	0	0	492	0	0	0	0	0	960
06:45 PM	0	404	0	0	404	0	0	0	0	0	0	483	0	0	483	0	0	0	0	0	887
Total	0	1986	0	0	1986	0	0	0	0	0	0	2150	0	0	2150	0	0	0	0	0	4136
07:00 PM	0	405	0	0	405	0	0	0	0	0	0	262	0	0	262	0	0	0	0	0	667
07:15 PM	0	285	0	0	285	0	0	0	0	0	0	360	0	0	360	0	0	0	0	0	645
07:30 PM	0	278	0	0	278	0	0	0	0	0	0	362	0	0	362	0	0	0	0	0	640
07:45 PM	0	237	0	0	237	0	0	0	0	0	0	330	0	0	330	0	0	0	0	0	567
Total	0	1205	0	0	1205	0	0	0	0	0	0	1314	0	0	1314	0	0	0	0	0	2519
Grand Total	0	33628	0	0	33628	0	0	0	0	0	0	31043	0	0	31043	0	0	0	0	0	64671
Apprch %	0	100	0	0		0	0	0	0		0	100	0	0		0	0	0	0		
Total %	0	52	0	0	52	0	0	0	0	0	0	48	0	0	48	0	0	0	0	0	
Classes 1, 2, 3	0	29293	0	0	29293	0	0	0	0	0	0	26508	0	0	26508	0	0	0	0	0	55801
% Classes 1, 2, 3	0	87.1	0	0	87.1	0	0	0	0	0	0	85.4	0	0	85.4	0	0	0	0	0	86.3
Classes 4, 5, 6, 7	0	1281	0	0	1281	0	0	0	0	0	0	1184	0	0	1184	0	0	0	0	0	2465
% Classes 4, 5, 6, 7	0	3.8	0	0	3.8	0	0	0	0	0	0	3.8	0	0	3.8	0	0	0	0	0	3.8
Classes 8, 9, 10	0	2969	0	0	2969	0	0	0	0	0	0	3265	0	0	3265	0	0	0	0	0	6234
% Classes 8, 9, 10	0	8.8	0	0	8.8	0	0	0	0	0	0	10.5	0	0	10.5	0	0	0	0	0	9.6
Classes 11, 12, 13	0	85	0	0	85	0	0	0	0	0	0	86	0	0	86	0	0	0	0	0	171
% Classes 11, 12, 13	0	0.3	0	0	0.3	0	0	0	0	0	0	0.3	0	0	0.3	0	0	0	0	0	0.3

DocuSign Envelope ID: 5C03745C-4B01-4834-A65D-B77F558A4F46

Quality Counts

920 Blairhill Rd, Ste B-106
Charlotte, NC 28217

File Name : 15411718 - I-26 N of Brevard Rd
Site Code : 15411718
Start Date : 4/20/2021
Page No : 3

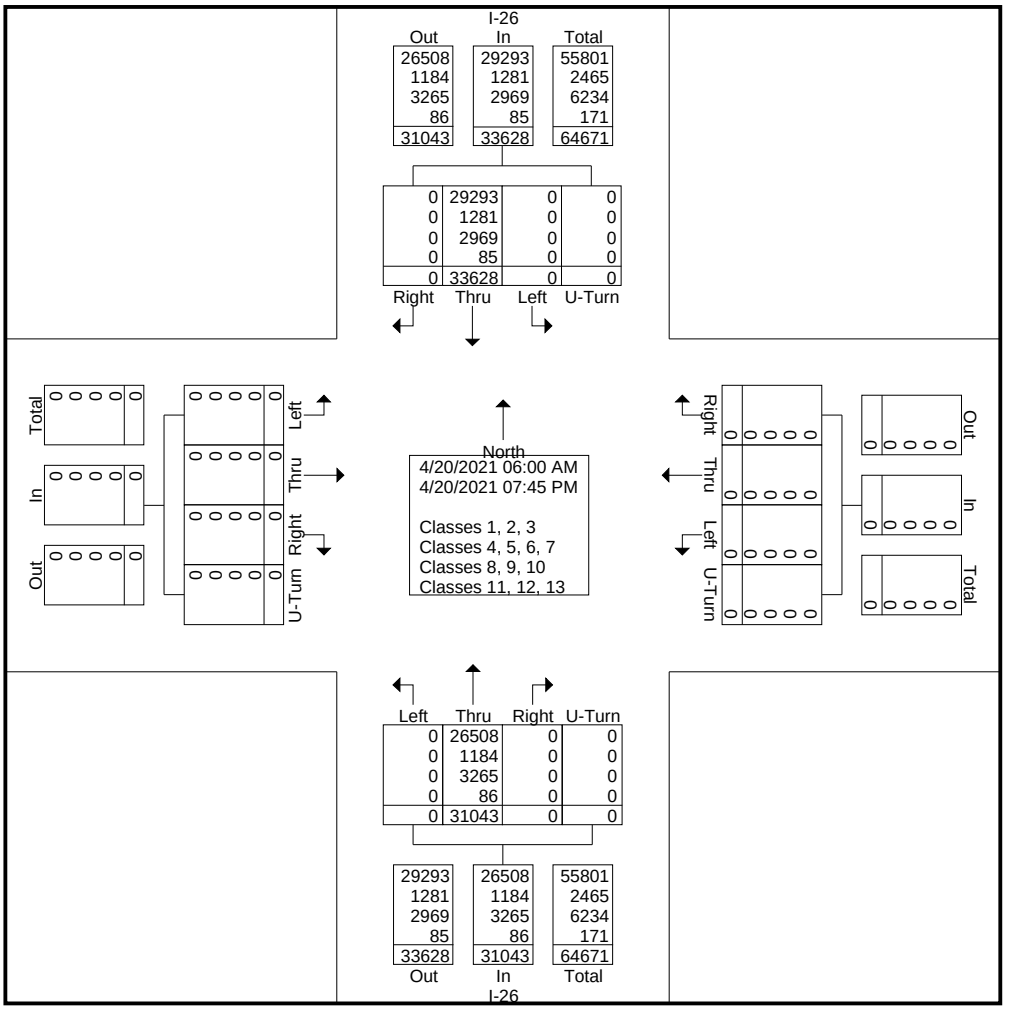

DocuSign Envelope ID: 5C03745C-4B01-4834-A65D-B77F558A4F46

Quality Counts

920 Blairhill Rd, Ste B-106
Charlotte, NC 28217

File Name : 15411718 - I-26 N of Brevard Rd
Site Code : 15411718
Start Date : 4/20/2021
Page No : 4

	I-26 Southbound					Westbound					I-26 Northbound					Eastbound					
Start Time	Left	Thru	Right	U-Turn	App. Total	Left	Thru	Right	U-Turn	App. Total	Left	Thru	Right	U-Turn	App. Total	Left	Thru	Right	U-Turn	App. Total	Int. Total
Peak Hour Analysis From 06:00 AM to 11:45 AM - Peak 1 of 1																					
Peak Hour for Entire Intersection Begins at 07:15 AM																					
07:15 AM	0	746	0	0	746	0	0	0	0	0	0	560	0	0	560	0	0	0	0	0	1306
07:30 AM	0	**832**	0	0	**832**	0	0	0	0	0	0	579	0	0	579	0	0	0	0	0	**1411**
07:45 AM	0	764	0	0	764	0	0	0	0	0	0	**642**	0	0	**642**	0	0	0	0	0	1406
08:00 AM	0	663	0	0	663	0	0	0	0	0	0	586	0	0	586	0	0	0	0	0	1249
Total Volume	0	3005	0	0	3005	0	0	0	0	0	0	2367	0	0	2367	0	0	0	0	0	5372
% App. Total	0	100	0	0		0	0	0	0		0	100	0	0		0	0	0	0		
PHF	.000	.903	.000	.000	.903	.000	.000	.000	.000	.000	.000	.922	.000	.000	.922	.000	.000	.000	.000	.000	.952

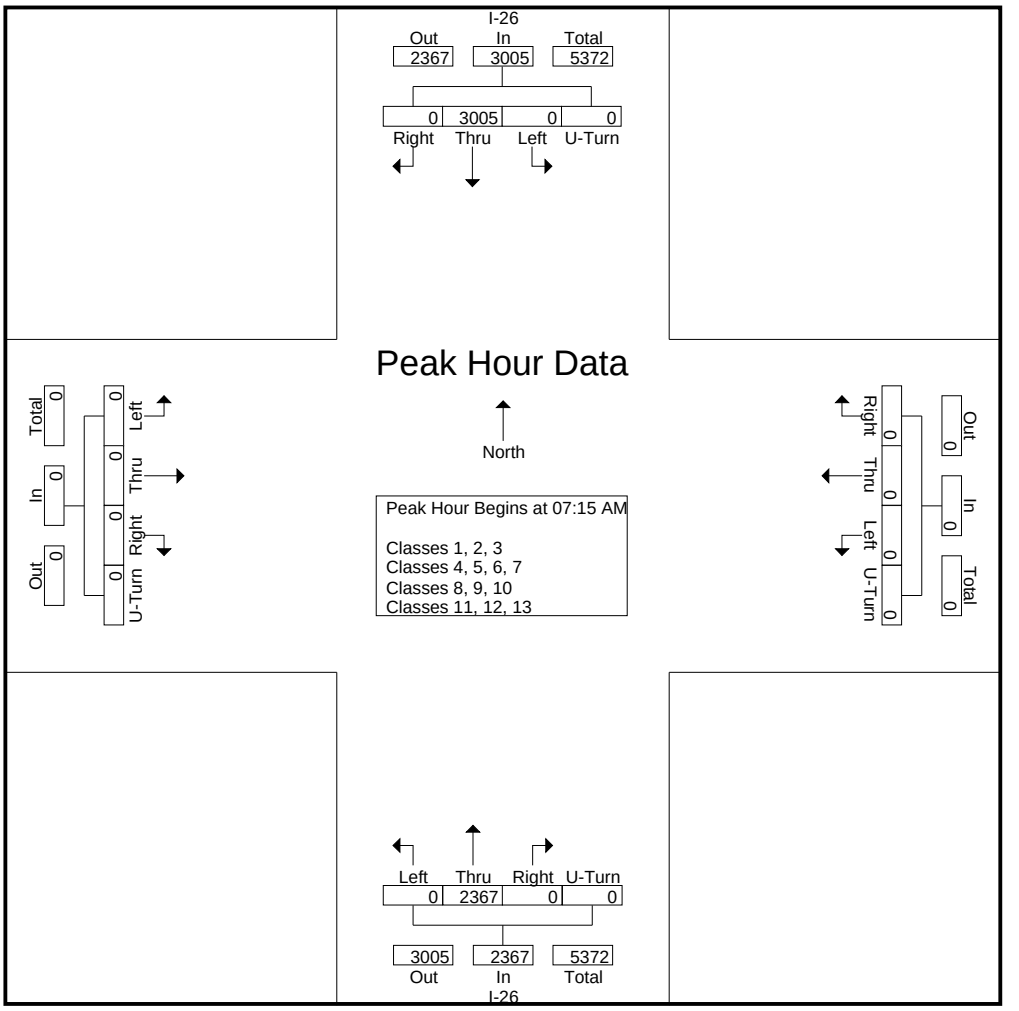

DocuSign Envelope ID: 5C03745C-4B01-4834-A65D-B77F558A4F46

Quality Counts

920 Blairhill Rd, Ste B-106
Charlotte, NC 28217

File Name : 15411718 - I-26 N of Brevard Rd
Site Code : 15411718
Start Date : 4/20/2021
Page No : 5

	I-26 Southbound					Westbound					I-26 Northbound					Eastbound					
Start Time	Left	Thru	Right	U-Turn	App. Total	Left	Thru	Right	U-Turn	App. Total	Left	Thru	Right	U-Turn	App. Total	Left	Thru	Right	U-Turn	App. Total	Int. Total
Peak Hour Analysis From 12:00 PM to 07:45 PM - Peak 1 of 1																					
Peak Hour for Entire Intersection Begins at 04:45 PM																					
04:45 PM	0	704	0	0	704	0	0	0	0	0	0	690	0	0	690	0	0	0	0	0	1394
05:00 PM	0	753	0	0	753	0	0	0	0	0	0	**753**	0	0	**753**	0	0	0	0	0	1506
05:15 PM	0	**794**	0	0	**794**	0	0	0	0	0	0	752	0	0	752	0	0	0	0	0	**1546**
05:30 PM	0	702	0	0	702	0	0	0	0	0	0	688	0	0	688	0	0	0	0	0	1390
Total Volume	0	2953	0	0	2953	0	0	0	0	0	0	2883	0	0	2883	0	0	0	0	0	5836
% App. Total	0	100	0	0		0	0	0	0		0	100	0	0		0	0	0	0		
PHF	.000	.930	.000	.000	.930	.000	.000	.000	.000	.000	.000	.957	.000	.000	.957	.000	.000	.000	.000	.000	.944

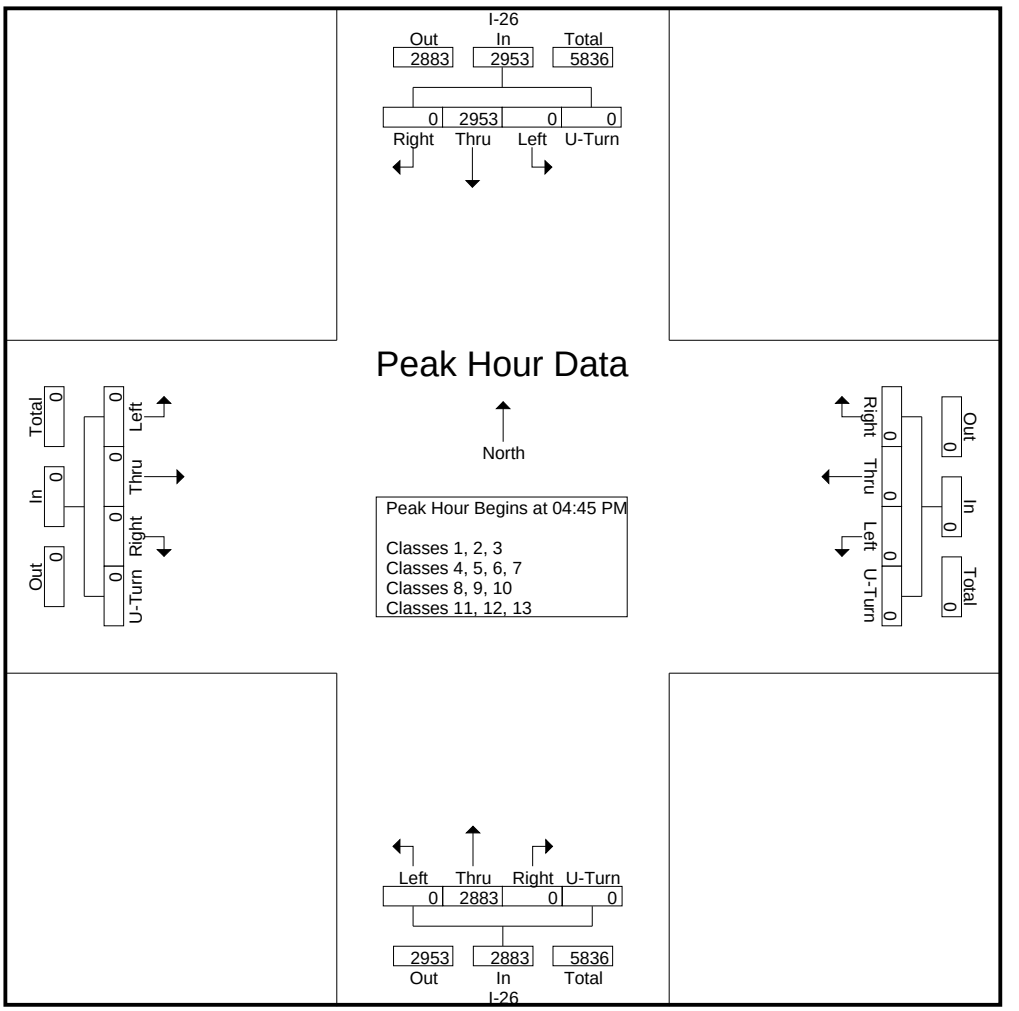

DocuSign Envelope ID: 5C03745C-4B01-4834-A65D-B77F558A4F46

Quality Counts

920 Blairhill Rd, Ste B-106
Charlotte, NC 28217

File Name : 15411718 - I-26 N of Brevard Rd
Site Code : 15411718
Start Date : 4/20/2021
Page No : 1

Groups Printed- Classes 1, 2, 3

	I-26 Southbound					Westbound					I-26 Northbound					Eastbound					
Start Time	Left	Thru	Right	U-Turn	App. Total	Left	Thru	Right	U-Turn	App. Total	Left	Thru	Right	U-Turn	App. Total	Left	Thru	Right	U-Turn	App. Total	Int. Total
06:00 AM	0	247	0	0	247	0	0	0	0	0	0	160	0	0	160	0	0	0	0	0	407
06:15 AM	0	364	0	0	364	0	0	0	0	0	0	235	0	0	235	0	0	0	0	0	599
06:30 AM	0	546	0	0	546	0	0	0	0	0	0	274	0	0	274	0	0	0	0	0	820
06:45 AM	0	434	0	0	434	0	0	0	0	0	0	300	0	0	300	0	0	0	0	0	734
Total	0	1591	0	0	1591	0	0	0	0	0	0	969	0	0	969	0	0	0	0	0	2560
07:00 AM	0	480	0	0	480	0	0	0	0	0	0	377	0	0	377	0	0	0	0	0	857
07:15 AM	0	669	0	0	669	0	0	0	0	0	0	515	0	0	515	0	0	0	0	0	1184
07:30 AM	0	754	0	0	754	0	0	0	0	0	0	512	0	0	512	0	0	0	0	0	1266
07:45 AM	0	669	0	0	669	0	0	0	0	0	0	562	0	0	562	0	0	0	0	0	1231
Total	0	2572	0	0	2572	0	0	0	0	0	0	1966	0	0	1966	0	0	0	0	0	4538
08:00 AM	0	575	0	0	575	0	0	0	0	0	0	506	0	0	506	0	0	0	0	0	1081
08:15 AM	0	589	0	0	589	0	0	0	0	0	0	548	0	0	548	0	0	0	0	0	1137
08:30 AM	0	579	0	0	579	0	0	0	0	0	0	536	0	0	536	0	0	0	0	0	1115
08:45 AM	0	576	0	0	576	0	0	0	0	0	0	380	0	0	380	0	0	0	0	0	956
Total	0	2319	0	0	2319	0	0	0	0	0	0	1970	0	0	1970	0	0	0	0	0	4289
09:00 AM	0	471	0	0	471	0	0	0	0	0	0	353	0	0	353	0	0	0	0	0	824
09:15 AM	0	496	0	0	496	0	0	0	0	0	0	361	0	0	361	0	0	0	0	0	857
09:30 AM	0	523	0	0	523	0	0	0	0	0	0	328	0	0	328	0	0	0	0	0	851
09:45 AM	0	517	0	0	517	0	0	0	0	0	0	406	0	0	406	0	0	0	0	0	923
Total	0	2007	0	0	2007	0	0	0	0	0	0	1448	0	0	1448	0	0	0	0	0	3455
10:00 AM	0	453	0	0	453	0	0	0	0	0	0	432	0	0	432	0	0	0	0	0	885
10:15 AM	0	398	0	0	398	0	0	0	0	0	0	430	0	0	430	0	0	0	0	0	828
10:30 AM	0	432	0	0	432	0	0	0	0	0	0	465	0	0	465	0	0	0	0	0	897
10:45 AM	0	516	0	0	516	0	0	0	0	0	0	461	0	0	461	0	0	0	0	0	977
Total	0	1799	0	0	1799	0	0	0	0	0	0	1788	0	0	1788	0	0	0	0	0	3587
11:00 AM	0	523	0	0	523	0	0	0	0	0	0	469	0	0	469	0	0	0	0	0	992
11:15 AM	0	492	0	0	492	0	0	0	0	0	0	481	0	0	481	0	0	0	0	0	973
11:30 AM	0	519	0	0	519	0	0	0	0	0	0	521	0	0	521	0	0	0	0	0	1040
11:45 AM	0	507	0	0	507	0	0	0	0	0	0	504	0	0	504	0	0	0	0	0	1011
Total	0	2041	0	0	2041	0	0	0	0	0	0	1975	0	0	1975	0	0	0	0	0	4016
12:00 PM	0	537	0	0	537	0	0	0	0	0	0	464	0	0	464	0	0	0	0	0	1001
12:15 PM	0	602	0	0	602	0	0	0	0	0	0	434	0	0	434	0	0	0	0	0	1036
12:30 PM	0	519	0	0	519	0	0	0	0	0	0	508	0	0	508	0	0	0	0	0	1027
12:45 PM	0	529	0	0	529	0	0	0	0	0	0	518	0	0	518	0	0	0	0	0	1047
Total	0	2187	0	0	2187	0	0	0	0	0	0	1924	0	0	1924	0	0	0	0	0	4111
01:00 PM	0	505	0	0	505	0	0	0	0	0	0	421	0	0	421	0	0	0	0	0	926
01:15 PM	0	535	0	0	535	0	0	0	0	0	0	519	0	0	519	0	0	0	0	0	1054
01:30 PM	0	553	0	0	553	0	0	0	0	0	0	523	0	0	523	0	0	0	0	0	1076
01:45 PM	0	557	0	0	557	0	0	0	0	0	0	498	0	0	498	0	0	0	0	0	1055
Total	0	2150	0	0	2150	0	0	0	0	0	0	1961	0	0	1961	0	0	0	0	0	4111
02:00 PM	0	567	0	0	567	0	0	0	0	0	0	492	0	0	492	0	0	0	0	0	1059
02:15 PM	0	615	0	0	615	0	0	0	0	0	0	538	0	0	538	0	0	0	0	0	1153
02:30 PM	0	548	0	0	548	0	0	0	0	0	0	565	0	0	565	0	0	0	0	0	1113
02:45 PM	0	603	0	0	603	0	0	0	0	0	0	576	0	0	576	0	0	0	0	0	1179
Total	0	2333	0	0	2333	0	0	0	0	0	0	2171	0	0	2171	0	0	0	0	0	4504
03:00 PM	0	557	0	0	557	0	0	0	0	0	0	542	0	0	542	0	0	0	0	0	1099
03:15 PM	0	592	0	0	592	0	0	0	0	0	0	527	0	0	527	0	0	0	0	0	1119
03:30 PM	0	622	0	0	622	0	0	0	0	0	0	655	0	0	655	0	0	0	0	0	1277

DocuSign Envelope ID: 5C03745C-4B01-4834-A65D-B77F558A4F46

Quality Counts

920 Blairhill Rd, Ste B-106
Charlotte, NC 28217

File Name : 15411718 - I-26 N of Brevard Rd
Site Code : 15411718
Start Date : 4/20/2021
Page No : 2

Groups Printed- Classes 1, 2, 3

	I-26 Southbound					Westbound					I-26 Northbound					Eastbound					
Start Time	Left	Thru	Right	U-Turn	App. Total	Left	Thru	Right	U-Turn	App. Total	Left	Thru	Right	U-Turn	App. Total	Left	Thru	Right	U-Turn	App. Total	Int. Total
03:45 PM	0	639	0	0	639	0	0	0	0	0	0	606	0	0	606	0	0	0	0	0	1245
Total	0	2410	0	0	2410	0	0	0	0	0	0	2330	0	0	2330	0	0	0	0	0	4740
04:00 PM	0	637	0	0	637	0	0	0	0	0	0	600	0	0	600	0	0	0	0	0	1237
04:15 PM	0	630	0	0	630	0	0	0	0	0	0	648	0	0	648	0	0	0	0	0	1278
04:30 PM	0	609	0	0	609	0	0	0	0	0	0	552	0	0	552	0	0	0	0	0	1161
04:45 PM	0	624	0	0	624	0	0	0	0	0	0	602	0	0	602	0	0	0	0	0	1226
Total	0	2500	0	0	2500	0	0	0	0	0	0	2402	0	0	2402	0	0	0	0	0	4902
05:00 PM	0	686	0	0	686	0	0	0	0	0	0	659	0	0	659	0	0	0	0	0	1345
05:15 PM	0	730	0	0	730	0	0	0	0	0	0	675	0	0	675	0	0	0	0	0	1405
05:30 PM	0	638	0	0	638	0	0	0	0	0	0	600	0	0	600	0	0	0	0	0	1238
05:45 PM	0	552	0	0	552	0	0	0	0	0	0	601	0	0	601	0	0	0	0	0	1153
Total	0	2606	0	0	2606	0	0	0	0	0	0	2535	0	0	2535	0	0	0	0	0	5141
06:00 PM	0	503	0	0	503	0	0	0	0	0	0	510	0	0	510	0	0	0	0	0	1013
06:15 PM	0	478	0	0	478	0	0	0	0	0	0	529	0	0	529	0	0	0	0	0	1007
06:30 PM	0	402	0	0	402	0	0	0	0	0	0	428	0	0	428	0	0	0	0	0	830
06:45 PM	0	350	0	0	350	0	0	0	0	0	0	430	0	0	430	0	0	0	0	0	780
Total	0	1733	0	0	1733	0	0	0	0	0	0	1897	0	0	1897	0	0	0	0	0	3630
07:00 PM	0	362	0	0	362	0	0	0	0	0	0	253	0	0	253	0	0	0	0	0	615
07:15 PM	0	242	0	0	242	0	0	0	0	0	0	315	0	0	315	0	0	0	0	0	557
07:30 PM	0	248	0	0	248	0	0	0	0	0	0	317	0	0	317	0	0	0	0	0	565
07:45 PM	0	193	0	0	193	0	0	0	0	0	0	287	0	0	287	0	0	0	0	0	480
Total	0	1045	0	0	1045	0	0	0	0	0	0	1172	0	0	1172	0	0	0	0	0	2217
Grand Total	0	29293	0	0	29293	0	0	0	0	0	0	26508	0	0	26508	0	0	0	0	0	55801
Apprch %	0	100	0	0		0	0	0	0		0	100	0	0		0	0	0	0		
Total %	0	52.5	0	0	52.5	0	0	0	0	0	0	47.5	0	0	47.5	0	0	0	0	0	

DocuSign Envelope ID: 5C03745C-4B01-4834-A65D-B77F558A4F46

Quality Counts

920 Blairhill Rd, Ste B-106
Charlotte, NC 28217

File Name : 15411718 - I-26 N of Brevard Rd
Site Code : 15411718
Start Date : 4/20/2021
Page No : 3

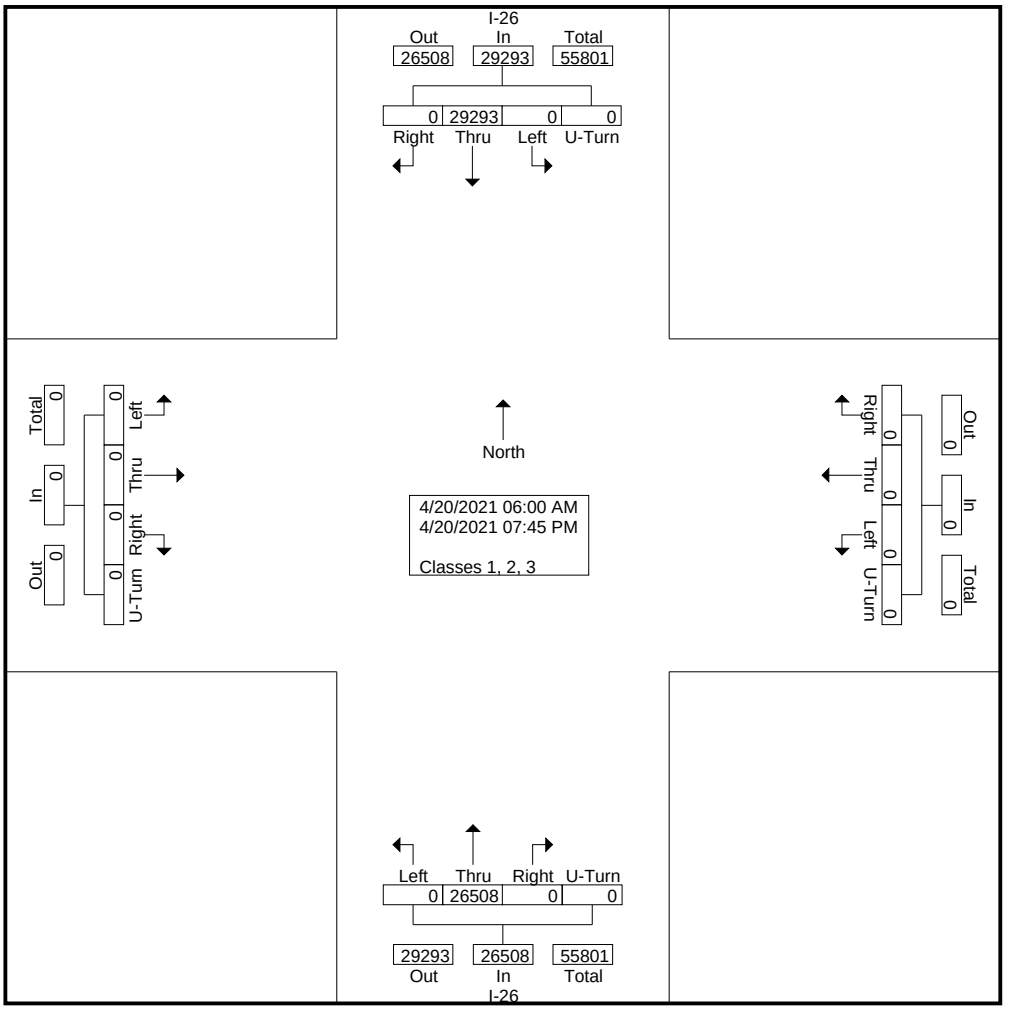

DocuSign Envelope ID: 5C03745C-4B01-4834-A65D-B77F558A4F46

Quality Counts

920 Blairhill Rd, Ste B-106
Charlotte, NC 28217

File Name : 15411718 - I-26 N of Brevard Rd
Site Code : 15411718
Start Date : 4/20/2021

	I-26 Southbound					Westbound					I-26 Northbound					Eastbound					
Start Time	Left	Thru	Right	U-Turn	App. Total	Left	Thru	Right	U-Turn	App. Total	Left	Thru	Right	U-Turn	App. Total	Left	Thru	Right	U-Turn	App. Total	Int. Total
Peak Hour Analysis From 06:00 AM to 11:45 AM - Peak 1 of 1																					
Peak Hour for Entire Intersection Begins at 07:15 AM																					
07:15 AM	0	669	0	0	669	0	0	0	0	0	0	515	0	0	515	0	0	0	0	0	1184
07:30 AM	0	**754**	0	0	**754**	0	0	0	0	0	0	512	0	0	512	0	0	0	0	0	**1266**
07:45 AM	0	669	0	0	669	0	0	0	0	0	0	**562**	0	0	**562**	0	0	0	0	0	1231
08:00 AM	0	575	0	0	575	0	0	0	0	0	0	506	0	0	506	0	0	0	0	0	1081
Total Volume	0	2667	0	0	2667	0	0	0	0	0	0	2095	0	0	2095	0	0	0	0	0	4762
% App. Total	0	100	0	0		0	0	0	0		0	100	0	0		0	0	0	0		
PHF	.000	.884	.000	.000	.884	.000	.000	.000	.000	.000	.000	.932	.000	.000	.932	.000	.000	.000	.000	.000	.940

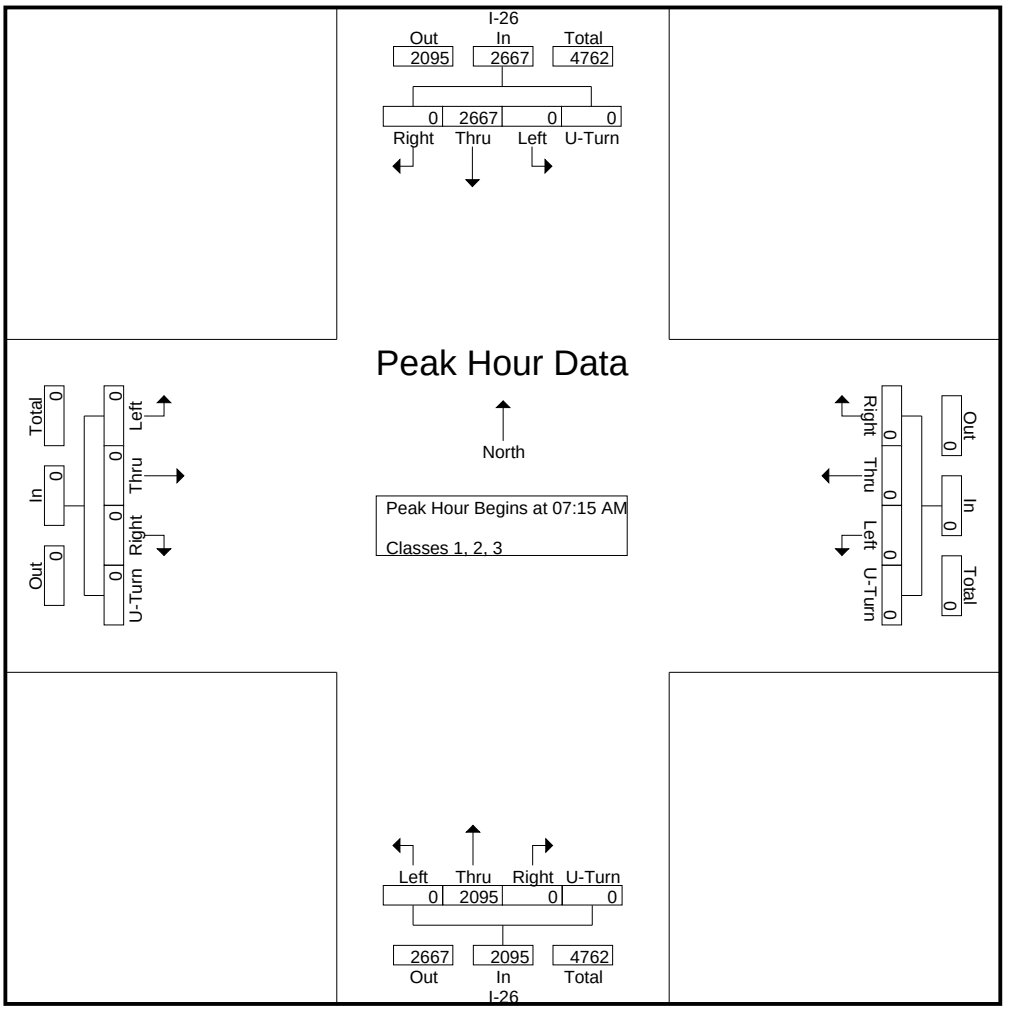

DocuSign Envelope ID: 5C03745C-4B01-4834-A65D-B77F558A4F46

Quality Counts

920 Blairhill Rd, Ste B-106
Charlotte, NC 28217

File Name : 15411718 - I-26 N of Brevard Rd
Site Code : 15411718
Start Date : 4/20/2021
Page No : 5

	I-26 Southbound					Westbound					I-26 Northbound					Eastbound					
Start Time	Left	Thru	Right	U-Turn	App. Total	Left	Thru	Right	U-Turn	App. Total	Left	Thru	Right	U-Turn	App. Total	Left	Thru	Right	U-Turn	App. Total	Int. Total
Peak Hour Analysis From 12:00 PM to 07:45 PM - Peak 1 of 1																					
Peak Hour for Entire Intersection Begins at 04:45 PM																					
04:45 PM	0	624	0	0	624	0	0	0	0	0	0	602	0	0	602	0	0	0	0	0	1226
05:00 PM	0	686	0	0	686	0	0	0	0	0	0	659	0	0	659	0	0	0	0	0	1345
05:15 PM	0	**730**	0	0	**730**	0	0	0	0	0	0	**675**	0	0	**675**	0	0	0	0	0	**1405**
05:30 PM	0	638	0	0	638	0	0	0	0	0	0	600	0	0	600	0	0	0	0	0	1238
Total Volume	0	2678	0	0	2678	0	0	0	0	0	0	2536	0	0	2536	0	0	0	0	0	5214
% App. Total	0	100	0	0		0	0	0	0		0	100	0	0		0	0	0	0		
PHF	.000	.917	.000	.000	.917	.000	.000	.000	.000	.000	.000	.939	.000	.000	.939	.000	.000	.000	.000	.000	.928

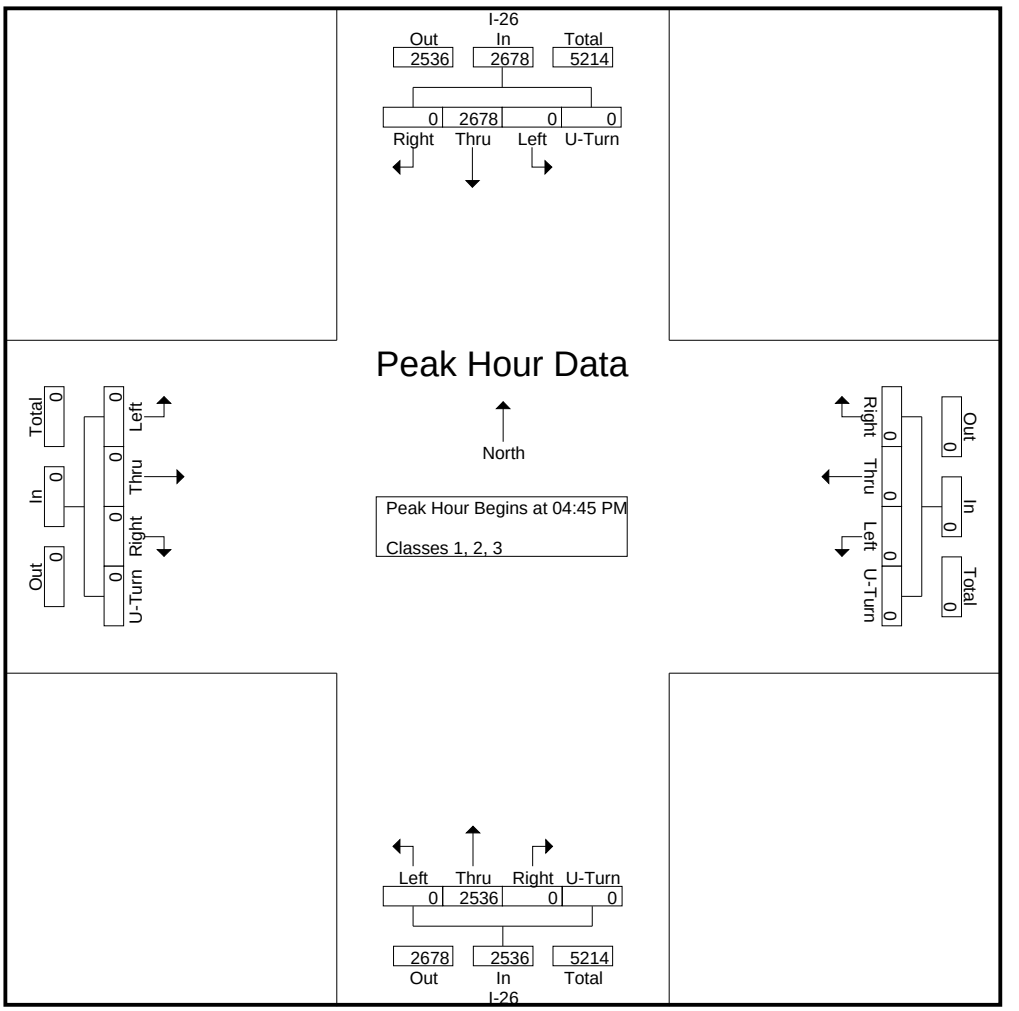

DocuSign Envelope ID: 5C03745C-4B01-4834-A65D-B77F558A4F46

Quality Counts

920 Blairhill Rd, Ste B-106
Charlotte, NC 28217

File Name : 15411718 - I-26 N of Brevard Rd
Site Code : 15411718
Start Date : 4/20/2021
Page No : 1

Groups Printed- Classes 4, 5, 6, 7

	I-26 Southbound					Westbound					I-26 Northbound					Eastbound					
Start Time	Left	Thru	Right	U-Turn	App. Total	Left	Thru	Right	U-Turn	App. Total	Left	Thru	Right	U-Turn	App. Total	Left	Thru	Right	U-Turn	App. Total	Int. Total
06:00 AM	0	11	0	0	11	0	0	0	0	0	0	13	0	0	13	0	0	0	0	0	24
06:15 AM	0	19	0	0	19	0	0	0	0	0	0	12	0	0	12	0	0	0	0	0	31
06:30 AM	0	25	0	0	25	0	0	0	0	0	0	14	0	0	14	0	0	0	0	0	39
06:45 AM	0	23	0	0	23	0	0	0	0	0	0	6	0	0	6	0	0	0	0	0	29
Total	0	78	0	0	78	0	0	0	0	0	0	45	0	0	45	0	0	0	0	0	123
07:00 AM	0	30	0	0	30	0	0	0	0	0	0	13	0	0	13	0	0	0	0	0	43
07:15 AM	0	28	0	0	28	0	0	0	0	0	0	12	0	0	12	0	0	0	0	0	40
07:30 AM	0	39	0	0	39	0	0	0	0	0	0	20	0	0	20	0	0	0	0	0	59
07:45 AM	0	36	0	0	36	0	0	0	0	0	0	23	0	0	23	0	0	0	0	0	59
Total	0	133	0	0	133	0	0	0	0	0	0	68	0	0	68	0	0	0	0	0	201
08:00 AM	0	28	0	0	28	0	0	0	0	0	0	35	0	0	35	0	0	0	0	0	63
08:15 AM	0	27	0	0	27	0	0	0	0	0	0	33	0	0	33	0	0	0	0	0	60
08:30 AM	0	38	0	0	38	0	0	0	0	0	0	52	0	0	52	0	0	0	0	0	90
08:45 AM	0	31	0	0	31	0	0	0	0	0	0	46	0	0	46	0	0	0	0	0	77
Total	0	124	0	0	124	0	0	0	0	0	0	166	0	0	166	0	0	0	0	0	290
09:00 AM	0	24	0	0	24	0	0	0	0	0	0	29	0	0	29	0	0	0	0	0	53
09:15 AM	0	23	0	0	23	0	0	0	0	0	0	31	0	0	31	0	0	0	0	0	54
09:30 AM	0	30	0	0	30	0	0	0	0	0	0	30	0	0	30	0	0	0	0	0	60
09:45 AM	0	28	0	0	28	0	0	0	0	0	0	26	0	0	26	0	0	0	0	0	54
Total	0	105	0	0	105	0	0	0	0	0	0	116	0	0	116	0	0	0	0	0	221
10:00 AM	0	42	0	0	42	0	0	0	0	0	0	35	0	0	35	0	0	0	0	0	77
10:15 AM	0	14	0	0	14	0	0	0	0	0	0	30	0	0	30	0	0	0	0	0	44
10:30 AM	0	18	0	0	18	0	0	0	0	0	0	23	0	0	23	0	0	0	0	0	41
10:45 AM	0	29	0	0	29	0	0	0	0	0	0	17	0	0	17	0	0	0	0	0	46
Total	0	103	0	0	103	0	0	0	0	0	0	105	0	0	105	0	0	0	0	0	208
11:00 AM	0	25	0	0	25	0	0	0	0	0	0	15	0	0	15	0	0	0	0	0	40
11:15 AM	0	32	0	0	32	0	0	0	0	0	0	25	0	0	25	0	0	0	0	0	57
11:30 AM	0	23	0	0	23	0	0	0	0	0	0	27	0	0	27	0	0	0	0	0	50
11:45 AM	0	24	0	0	24	0	0	0	0	0	0	31	0	0	31	0	0	0	0	0	55
Total	0	104	0	0	104	0	0	0	0	0	0	98	0	0	98	0	0	0	0	0	202
12:00 PM	0	28	0	0	28	0	0	0	0	0	0	20	0	0	20	0	0	0	0	0	48
12:15 PM	0	30	0	0	30	0	0	0	0	0	0	22	0	0	22	0	0	0	0	0	52
12:30 PM	0	24	0	0	24	0	0	0	0	0	0	20	0	0	20	0	0	0	0	0	44
12:45 PM	0	25	0	0	25	0	0	0	0	0	0	18	0	0	18	0	0	0	0	0	43
Total	0	107	0	0	107	0	0	0	0	0	0	80	0	0	80	0	0	0	0	0	187
01:00 PM	0	23	0	0	23	0	0	0	0	0	0	13	0	0	13	0	0	0	0	0	36
01:15 PM	0	24	0	0	24	0	0	0	0	0	0	21	0	0	21	0	0	0	0	0	45
01:30 PM	0	26	0	0	26	0	0	0	0	0	0	20	0	0	20	0	0	0	0	0	46
01:45 PM	0	34	0	0	34	0	0	0	0	0	0	27	0	0	27	0	0	0	0	0	61
Total	0	107	0	0	107	0	0	0	0	0	0	81	0	0	81	0	0	0	0	0	188
02:00 PM	0	33	0	0	33	0	0	0	0	0	0	26	0	0	26	0	0	0	0	0	59
02:15 PM	0	29	0	0	29	0	0	0	0	0	0	25	0	0	25	0	0	0	0	0	54
02:30 PM	0	30	0	0	30	0	0	0	0	0	0	23	0	0	23	0	0	0	0	0	53
02:45 PM	0	22	0	0	22	0	0	0	0	0	0	26	0	0	26	0	0	0	0	0	48
Total	0	114	0	0	114	0	0	0	0	0	0	100	0	0	100	0	0	0	0	0	214
03:00 PM	0	26	0	0	26	0	0	0	0	0	0	27	0	0	27	0	0	0	0	0	53
03:15 PM	0	29	0	0	29	0	0	0	0	0	0	19	0	0	19	0	0	0	0	0	48
03:30 PM	0	30	0	0	30	0	0	0	0	0	0	21	0	0	21	0	0	0	0	0	51

DocuSign Envelope ID: 5C03745C-4B01-4834-A65D-B77F558A4F46

Quality Counts

920 Blairhill Rd, Ste B-106
Charlotte, NC 28217

File Name : 15411718 - I-26 N of Brevard Rd
Site Code : 15411718
Start Date : 4/20/2021
Page No : 2

Groups Printed- Classes 4, 5, 6, 7

	I-26 Southbound					Westbound					I-26 Northbound					Eastbound					
Start Time	Left	Thru	Right	U-Turn	App. Total	Left	Thru	Right	U-Turn	App. Total	Left	Thru	Right	U-Turn	App. Total	Left	Thru	Right	U-Turn	App. Total	Int. Total
03:45 PM	0	23	0	0	23	0	0	0	0	0	0	19	0	0	19	0	0	0	0	0	42
Total	0	108	0	0	108	0	0	0	0	0	0	86	0	0	86	0	0	0	0	0	194
04:00 PM	0	19	0	0	19	0	0	0	0	0	0	23	0	0	23	0	0	0	0	0	42
04:15 PM	0	25	0	0	25	0	0	0	0	0	0	33	0	0	33	0	0	0	0	0	58
04:30 PM	0	16	0	0	16	0	0	0	0	0	0	23	0	0	23	0	0	0	0	0	39
04:45 PM	0	26	0	0	26	0	0	0	0	0	0	22	0	0	22	0	0	0	0	0	48
Total	0	86	0	0	86	0	0	0	0	0	0	101	0	0	101	0	0	0	0	0	187
05:00 PM	0	20	0	0	20	0	0	0	0	0	0	22	0	0	22	0	0	0	0	0	42
05:15 PM	0	11	0	0	11	0	0	0	0	0	0	13	0	0	13	0	0	0	0	0	24
05:30 PM	0	10	0	0	10	0	0	0	0	0	0	13	0	0	13	0	0	0	0	0	23
05:45 PM	0	16	0	0	16	0	0	0	0	0	0	11	0	0	11	0	0	0	0	0	27
Total	0	57	0	0	57	0	0	0	0	0	0	59	0	0	59	0	0	0	0	0	116
06:00 PM	0	7	0	0	7	0	0	0	0	0	0	20	0	0	20	0	0	0	0	0	27
06:15 PM	0	9	0	0	9	0	0	0	0	0	0	14	0	0	14	0	0	0	0	0	23
06:30 PM	0	10	0	0	10	0	0	0	0	0	0	15	0	0	15	0	0	0	0	0	25
06:45 PM	0	7	0	0	7	0	0	0	0	0	0	12	0	0	12	0	0	0	0	0	19
Total	0	33	0	0	33	0	0	0	0	0	0	61	0	0	61	0	0	0	0	0	94
07:00 PM	0	3	0	0	3	0	0	0	0	0	0	1	0	0	1	0	0	0	0	0	4
07:15 PM	0	5	0	0	5	0	0	0	0	0	0	8	0	0	8	0	0	0	0	0	13
07:30 PM	0	3	0	0	3	0	0	0	0	0	0	2	0	0	2	0	0	0	0	0	5
07:45 PM	0	11	0	0	11	0	0	0	0	0	0	7	0	0	7	0	0	0	0	0	18
Total	0	22	0	0	22	0	0	0	0	0	0	18	0	0	18	0	0	0	0	0	40
Grand Total	0	1281	0	0	1281	0	0	0	0	0	0	1184	0	0	1184	0	0	0	0	0	2465
Apprch %	0	100	0	0		0	0	0	0		0	100	0	0		0	0	0	0		
Total %	0	52	0	0	52	0	0	0	0	0	0	48	0	0	48	0	0	0	0	0	

DocuSign Envelope ID: 5C03745C-4B01-4834-A65D-B77F558A4F46

Quality Counts

920 Blairhill Rd, Ste B-106
Charlotte, NC 28217

File Name : 15411718 - I-26 N of Brevard Rd
Site Code : 15411718
Start Date : 4/20/2021
Page No : 3

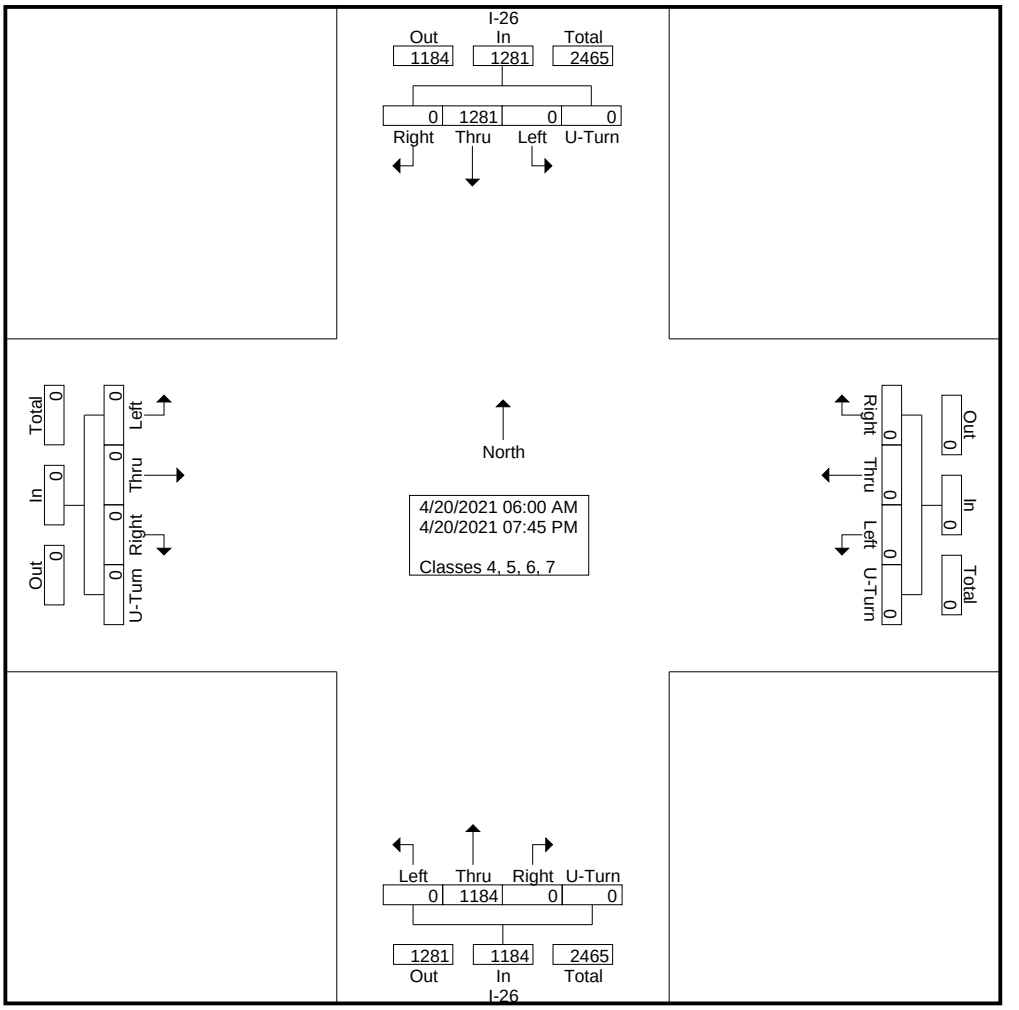

DocuSign Envelope ID: 5C03745C-4B01-4834-A65D-B77F558A4F46

Quality Counts

920 Blairhill Rd, Ste B-106
Charlotte, NC 28217

File Name : 15411718 - I-26 N of Brevard Rd
Site Code : 15411718
Start Date : 4/20/2021
Page No : 4

	I-26 Southbound					Westbound					I-26 Northbound					Eastbound					
Start Time	Left	Thru	Right	U-Turn	App. Total	Left	Thru	Right	U-Turn	App. Total	Left	Thru	Right	U-Turn	App. Total	Left	Thru	Right	U-Turn	App. Total	Int. Total
Peak Hour Analysis From 06:00 AM to 11:45 AM - Peak 1 of 1																					
Peak Hour for Entire Intersection Begins at 08:00 AM																					
08:00 AM	0	28	0	0	28	0	0	0	0	0	0	35	0	0	35	0	0	0	0	0	63
08:15 AM	0	27	0	0	27	0	0	0	0	0	0	33	0	0	33	0	0	0	0	0	60
08:30 AM	0	**38**	0	0	**38**	0	0	0	0	0	0	**52**	0	0	**52**	0	0	0	0	0	**90**
08:45 AM	0	31	0	0	31	0	0	0	0	0	0	46	0	0	46	0	0	0	0	0	77
Total Volume	0	124	0	0	124	0	0	0	0	0	0	166	0	0	166	0	0	0	0	0	290
% App. Total	0	100	0	0		0	0	0	0		0	100	0	0		0	0	0	0		
PHF	.000	.816	.000	.000	.816	.000	.000	.000	.000	.000	.000	.798	.000	.000	.798	.000	.000	.000	.000	.000	.806

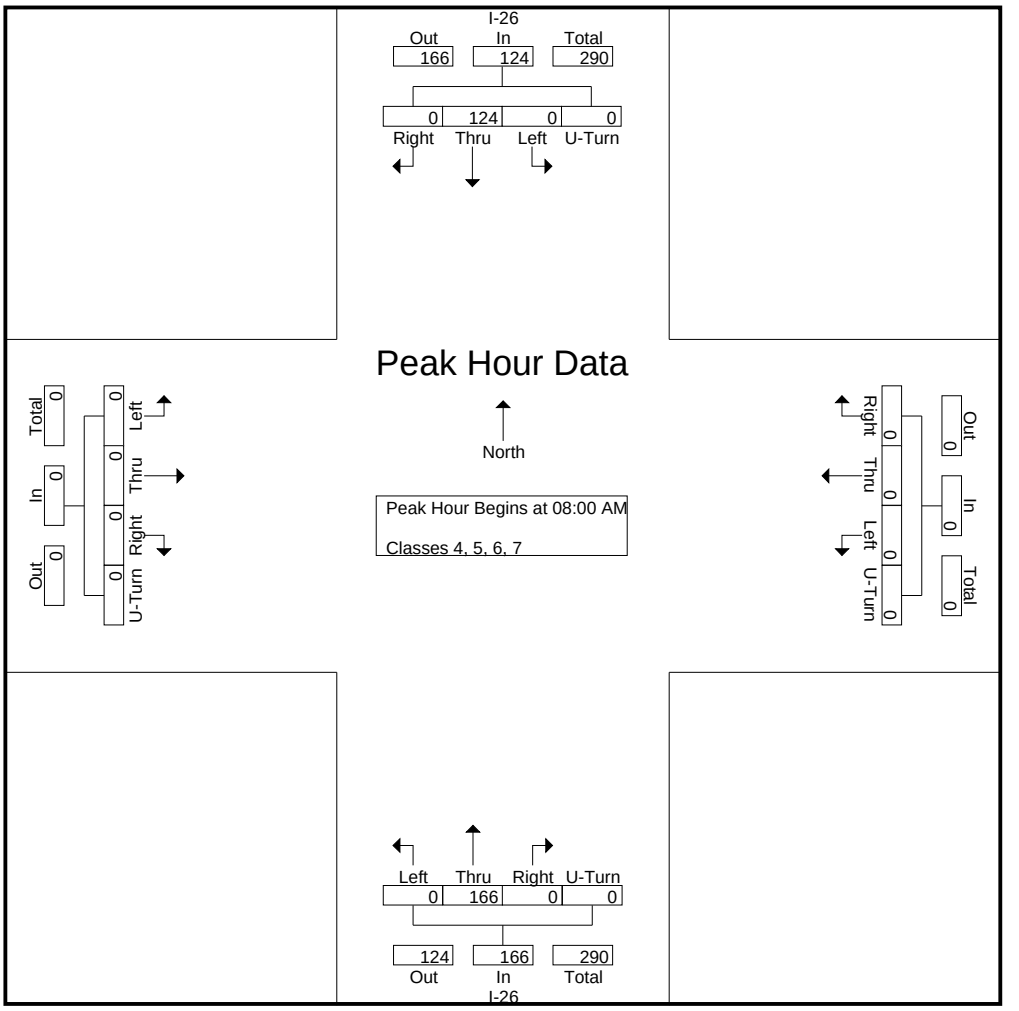

DocuSign Envelope ID: 5C03745C-4B01-4834-A65D-B77F558A4F46

Quality Counts

920 Blairhill Rd, Ste B-106
Charlotte, NC 28217

File Name : 15411718 - I-26 N of Brevard Rd
Site Code : 15411718
Start Date : 4/20/2021
Page No : 5

	I-26 Southbound					Westbound					I-26 Northbound					Eastbound					
Start Time	Left	Thru	Right	U-Turn	App. Total	Left	Thru	Right	U-Turn	App. Total	Left	Thru	Right	U-Turn	App. Total	Left	Thru	Right	U-Turn	App. Total	Int. Total
Peak Hour Analysis From 12:00 PM to 07:45 PM - Peak 1 of 1																					
Peak Hour for Entire Intersection Begins at 01:45 PM																					
01:45 PM	0	**34**	0	0	**34**	0	0	0	0	0	0	**27**	0	0	**27**	0	0	0	0	0	**61**
02:00 PM	0	33	0	0	33	0	0	0	0	0	0	26	0	0	26	0	0	0	0	0	59
02:15 PM	0	29	0	0	29	0	0	0	0	0	0	25	0	0	25	0	0	0	0	0	54
02:30 PM	0	30	0	0	30	0	0	0	0	0	0	23	0	0	23	0	0	0	0	0	53
Total Volume	0	126	0	0	126	0	0	0	0	0	0	101	0	0	101	0	0	0	0	0	227
% App. Total	0	100	0	0		0	0	0	0		0	100	0	0		0	0	0	0		
PHF	.000	.926	.000	.000	.926	.000	.000	.000	.000	.000	.000	.935	.000	.000	.935	.000	.000	.000	.000	.000	.930

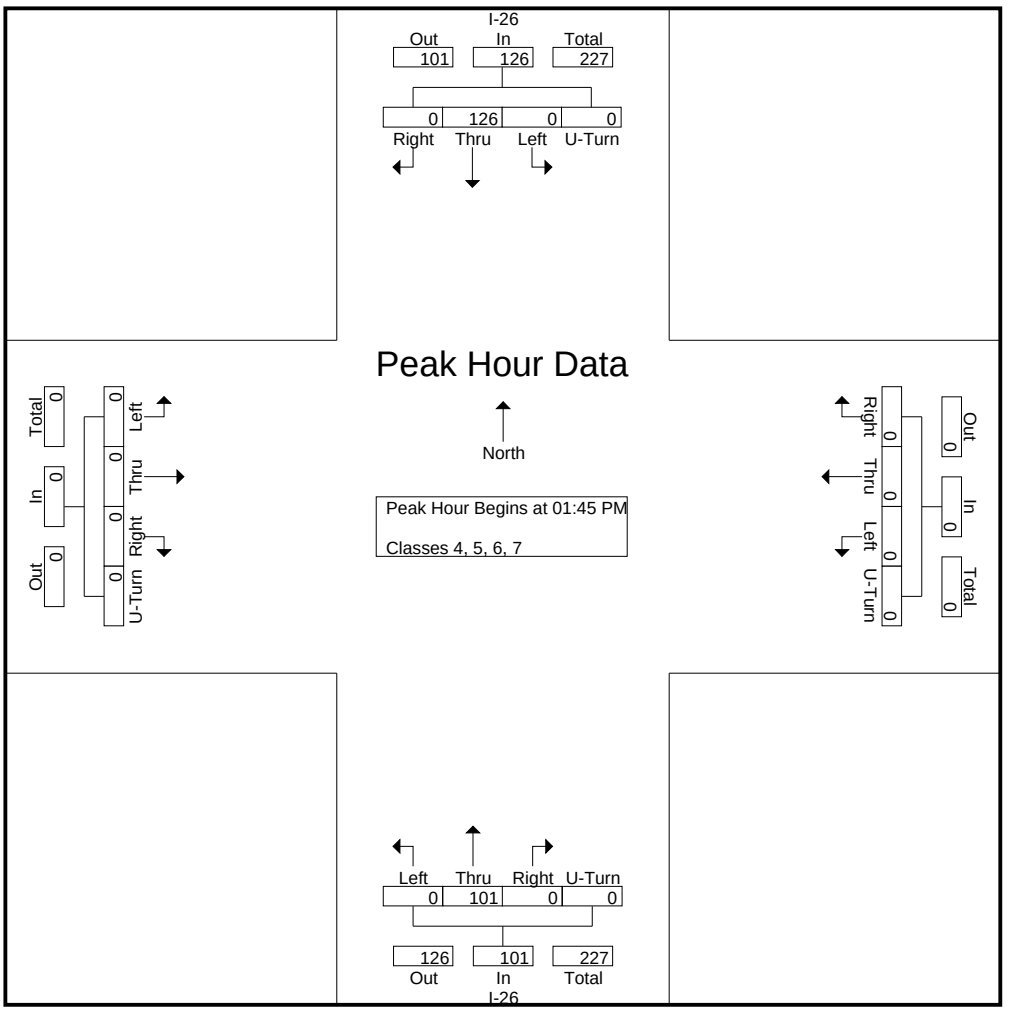

DocuSign Envelope ID: 5C03745C-4B01-4834-A65D-B77F558A4F46

Quality Counts

920 Blairhill Rd, Ste B-106
Charlotte, NC 28217

File Name : 15411718 - I-26 N of Brevard Rd
Site Code : 15411718
Start Date : 4/20/2021
Page No : 1

Groups Printed- Classes 8, 9, 10

	I-26 Southbound					Westbound					I-26 Northbound					Eastbound					
Start Time	Left	Thru	Right	U-Turn	App. Total	Left	Thru	Right	U-Turn	App. Total	Left	Thru	Right	U-Turn	App. Total	Left	Thru	Right	U-Turn	App. Total	Int. Total
06:00 AM	0	35	0	0	35	0	0	0	0	0	0	37	0	0	37	0	0	0	0	0	72
06:15 AM	0	43	0	0	43	0	0	0	0	0	0	49	0	0	49	0	0	0	0	0	92
06:30 AM	0	42	0	0	42	0	0	0	0	0	0	27	0	0	27	0	0	0	0	0	69
06:45 AM	0	37	0	0	37	0	0	0	0	0	0	51	0	0	51	0	0	0	0	0	88
Total	0	157	0	0	157	0	0	0	0	0	0	164	0	0	164	0	0	0	0	0	321
07:00 AM	0	42	0	0	42	0	0	0	0	0	0	46	0	0	46	0	0	0	0	0	88
07:15 AM	0	46	0	0	46	0	0	0	0	0	0	28	0	0	28	0	0	0	0	0	74
07:30 AM	0	39	0	0	39	0	0	0	0	0	0	44	0	0	44	0	0	0	0	0	83
07:45 AM	0	58	0	0	58	0	0	0	0	0	0	53	0	0	53	0	0	0	0	0	111
Total	0	185	0	0	185	0	0	0	0	0	0	171	0	0	171	0	0	0	0	0	356
08:00 AM	0	58	0	0	58	0	0	0	0	0	0	44	0	0	44	0	0	0	0	0	102
08:15 AM	0	49	0	0	49	0	0	0	0	0	0	48	0	0	48	0	0	0	0	0	97
08:30 AM	0	56	0	0	56	0	0	0	0	0	0	59	0	0	59	0	0	0	0	0	115
08:45 AM	0	64	0	0	64	0	0	0	0	0	0	38	0	0	38	0	0	0	0	0	102
Total	0	227	0	0	227	0	0	0	0	0	0	189	0	0	189	0	0	0	0	0	416
09:00 AM	0	65	0	0	65	0	0	0	0	0	0	39	0	0	39	0	0	0	0	0	104
09:15 AM	0	49	0	0	49	0	0	0	0	0	0	53	0	0	53	0	0	0	0	0	102
09:30 AM	0	78	0	0	78	0	0	0	0	0	0	63	0	0	63	0	0	0	0	0	141
09:45 AM	0	54	0	0	54	0	0	0	0	0	0	66	0	0	66	0	0	0	0	0	120
Total	0	246	0	0	246	0	0	0	0	0	0	221	0	0	221	0	0	0	0	0	467
10:00 AM	0	49	0	0	49	0	0	0	0	0	0	71	0	0	71	0	0	0	0	0	120
10:15 AM	0	67	0	0	67	0	0	0	0	0	0	60	0	0	60	0	0	0	0	0	127
10:30 AM	0	47	0	0	47	0	0	0	0	0	0	49	0	0	49	0	0	0	0	0	96
10:45 AM	0	56	0	0	56	0	0	0	0	0	0	63	0	0	63	0	0	0	0	0	119
Total	0	219	0	0	219	0	0	0	0	0	0	243	0	0	243	0	0	0	0	0	462
11:00 AM	0	62	0	0	62	0	0	0	0	0	0	66	0	0	66	0	0	0	0	0	128
11:15 AM	0	60	0	0	60	0	0	0	0	0	0	66	0	0	66	0	0	0	0	0	126
11:30 AM	0	63	0	0	63	0	0	0	0	0	0	65	0	0	65	0	0	0	0	0	128
11:45 AM	0	45	0	0	45	0	0	0	0	0	0	76	0	0	76	0	0	0	0	0	121
Total	0	230	0	0	230	0	0	0	0	0	0	273	0	0	273	0	0	0	0	0	503
12:00 PM	0	71	0	0	71	0	0	0	0	0	0	72	0	0	72	0	0	0	0	0	143
12:15 PM	0	57	0	0	57	0	0	0	0	0	0	81	0	0	81	0	0	0	0	0	138
12:30 PM	0	64	0	0	64	0	0	0	0	0	0	77	0	0	77	0	0	0	0	0	141
12:45 PM	0	61	0	0	61	0	0	0	0	0	0	75	0	0	75	0	0	0	0	0	136
Total	0	253	0	0	253	0	0	0	0	0	0	305	0	0	305	0	0	0	0	0	558
01:00 PM	0	72	0	0	72	0	0	0	0	0	0	65	0	0	65	0	0	0	0	0	137
01:15 PM	0	54	0	0	54	0	0	0	0	0	0	67	0	0	67	0	0	0	0	0	121
01:30 PM	0	52	0	0	52	0	0	0	0	0	0	77	0	0	77	0	0	0	0	0	129
01:45 PM	0	61	0	0	61	0	0	0	0	0	0	73	0	0	73	0	0	0	0	0	134
Total	0	239	0	0	239	0	0	0	0	0	0	282	0	0	282	0	0	0	0	0	521
02:00 PM	0	61	0	0	61	0	0	0	0	0	0	74	0	0	74	0	0	0	0	0	135
02:15 PM	0	45	0	0	45	0	0	0	0	0	0	70	0	0	70	0	0	0	0	0	115
02:30 PM	0	57	0	0	57	0	0	0	0	0	0	85	0	0	85	0	0	0	0	0	142
02:45 PM	0	54	0	0	54	0	0	0	0	0	0	67	0	0	67	0	0	0	0	0	121
Total	0	217	0	0	217	0	0	0	0	0	0	296	0	0	296	0	0	0	0	0	513
03:00 PM	0	57	0	0	57	0	0	0	0	0	0	63	0	0	63	0	0	0	0	0	120
03:15 PM	0	59	0	0	59	0	0	0	0	0	0	66	0	0	66	0	0	0	0	0	125
03:30 PM	0	49	0	0	49	0	0	0	0	0	0	76	0	0	76	0	0	0	0	0	125

DocuSign Envelope ID: 5C03745C-4B01-4834-A65D-B77F558A4F46

Quality Counts

920 Blairhill Rd, Ste B-106
Charlotte, NC 28217

File Name : 15411718 - I-26 N of Brevard Rd
Site Code : 15411718
Start Date : 4/20/2021

Groups Printed- Classes 8, 9, 10

	I-26 Southbound					Westbound					I-26 Northbound					Eastbound					
Start Time	Left	Thru	Right	U-Turn	App. Total	Left	Thru	Right	U-Turn	App. Total	Left	Thru	Right	U-Turn	App. Total	Left	Thru	Right	U-Turn	App. Total	Int. Total
03:45 PM	0	61	0	0	61	0	0	0	0	0	0	64	0	0	64	0	0	0	0	0	125
Total	0	226	0	0	226	0	0	0	0	0	0	269	0	0	269	0	0	0	0	0	495
04:00 PM	0	59	0	0	59	0	0	0	0	0	0	61	0	0	61	0	0	0	0	0	120
04:15 PM	0	47	0	0	47	0	0	0	0	0	0	59	0	0	59	0	0	0	0	0	106
04:30 PM	0	62	0	0	62	0	0	0	0	0	0	81	0	0	81	0	0	0	0	0	143
04:45 PM	0	53	0	0	53	0	0	0	0	0	0	65	0	0	65	0	0	0	0	0	118
Total	0	221	0	0	221	0	0	0	0	0	0	266	0	0	266	0	0	0	0	0	487
05:00 PM	0	45	0	0	45	0	0	0	0	0	0	72	0	0	72	0	0	0	0	0	117
05:15 PM	0	50	0	0	50	0	0	0	0	0	0	64	0	0	64	0	0	0	0	0	114
05:30 PM	0	51	0	0	51	0	0	0	0	0	0	75	0	0	75	0	0	0	0	0	126
05:45 PM	0	52	0	0	52	0	0	0	0	0	0	62	0	0	62	0	0	0	0	0	114
Total	0	198	0	0	198	0	0	0	0	0	0	273	0	0	273	0	0	0	0	0	471
06:00 PM	0	52	0	0	52	0	0	0	0	0	0	51	0	0	51	0	0	0	0	0	103
06:15 PM	0	62	0	0	62	0	0	0	0	0	0	50	0	0	50	0	0	0	0	0	112
06:30 PM	0	54	0	0	54	0	0	0	0	0	0	49	0	0	49	0	0	0	0	0	103
06:45 PM	0	45	0	0	45	0	0	0	0	0	0	41	0	0	41	0	0	0	0	0	86
Total	0	213	0	0	213	0	0	0	0	0	0	191	0	0	191	0	0	0	0	0	404
07:00 PM	0	40	0	0	40	0	0	0	0	0	0	8	0	0	8	0	0	0	0	0	48
07:15 PM	0	38	0	0	38	0	0	0	0	0	0	37	0	0	37	0	0	0	0	0	75
07:30 PM	0	27	0	0	27	0	0	0	0	0	0	42	0	0	42	0	0	0	0	0	69
07:45 PM	0	33	0	0	33	0	0	0	0	0	0	35	0	0	35	0	0	0	0	0	68
Total	0	138	0	0	138	0	0	0	0	0	0	122	0	0	122	0	0	0	0	0	260
Grand Total	0	2969	0	0	2969	0	0	0	0	0	0	3265	0	0	3265	0	0	0	0	0	6234
Apprch %	0	100	0	0		0	0	0	0		0	100	0	0		0	0	0	0		
Total %	0	47.6	0	0	47.6	0	0	0	0	0	0	52.4	0	0	52.4	0	0	0	0	0	

DocuSign Envelope ID: 5C03745C-4B01-4834-A65D-B77F558A4F46

Quality Counts

920 Blairhill Rd, Ste B-106
Charlotte, NC 28217

File Name : 15411718 - I-26 N of Brevard Rd
Site Code : 15411718
Start Date : 4/20/2021
Page No : 3

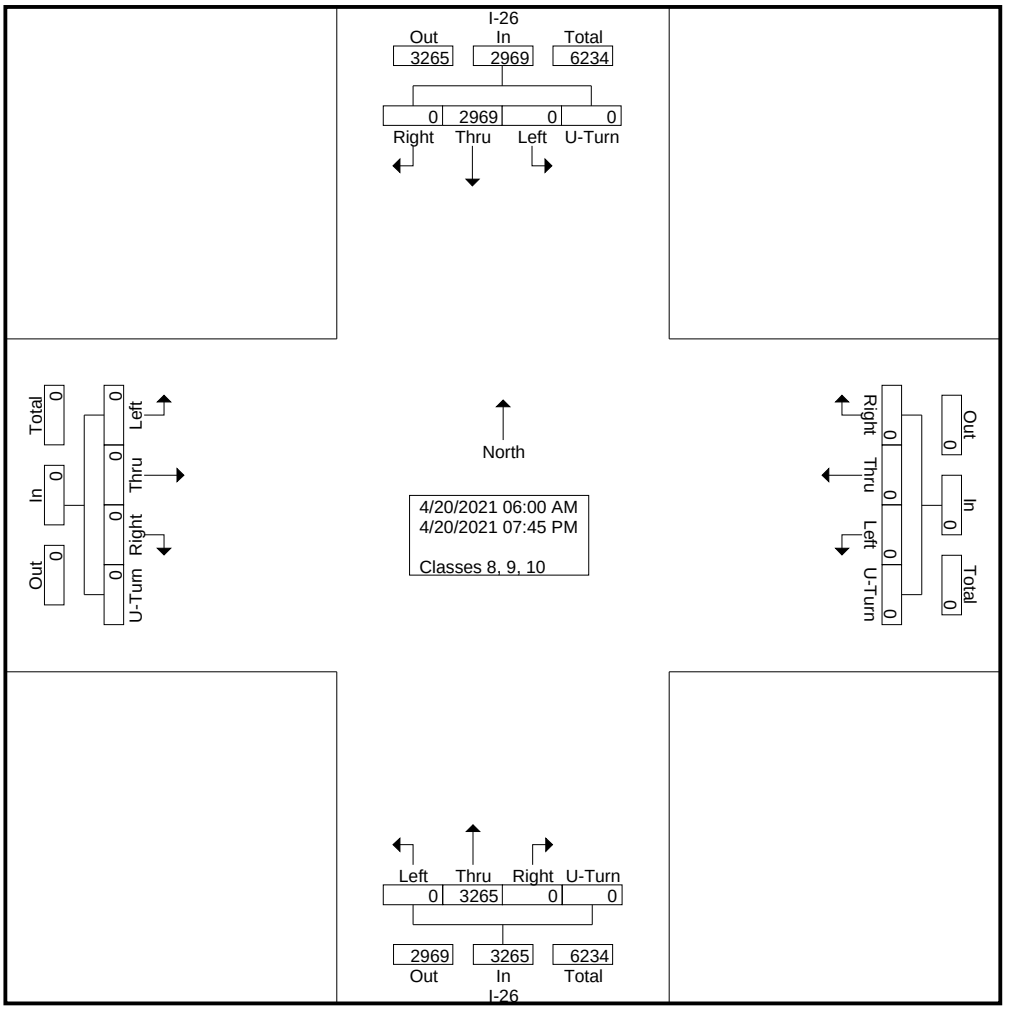

DocuSign Envelope ID: 5C03745C-4B01-4834-A65D-B77F558A4F46

Quality Counts

920 Blairhill Rd, Ste B-106
Charlotte, NC 28217

File Name : 15411718 - I-26 N of Brevard Rd
Site Code : 15411718
Start Date : 4/20/2021
Page No : 4

	I-26 Southbound					Westbound					I-26 Northbound					Eastbound					
Start Time	Left	Thru	Right	U-Turn	App. Total	Left	Thru	Right	U-Turn	App. Total	Left	Thru	Right	U-Turn	App. Total	Left	Thru	Right	U-Turn	App. Total	Int. Total
Peak Hour Analysis From 06:00 AM to 11:45 AM - Peak 1 of 1																					
Peak Hour for Entire Intersection Begins at 09:30 AM																					
09:30 AM	0	**78**	0	0	**78**	0	0	0	0	0	0	63	0	0	63	0	0	0	0	0	**141**
09:45 AM	0	54	0	0	54	0	0	0	0	0	0	66	0	0	66	0	0	0	0	0	120
10:00 AM	0	49	0	0	49	0	0	0	0	0	0	**71**	0	0	**71**	0	0	0	0	0	120
10:15 AM	0	67	0	0	67	0	0	0	0	0	0	60	0	0	60	0	0	0	0	0	127
Total Volume	0	248	0	0	248	0	0	0	0	0	0	260	0	0	260	0	0	0	0	0	508
% App. Total	0	100	0	0		0	0	0	0		0	100	0	0		0	0	0	0		
PHF	.000	.795	.000	.000	.795	.000	.000	.000	.000	.000	.000	.915	.000	.000	.915	.000	.000	.000	.000	.000	.901

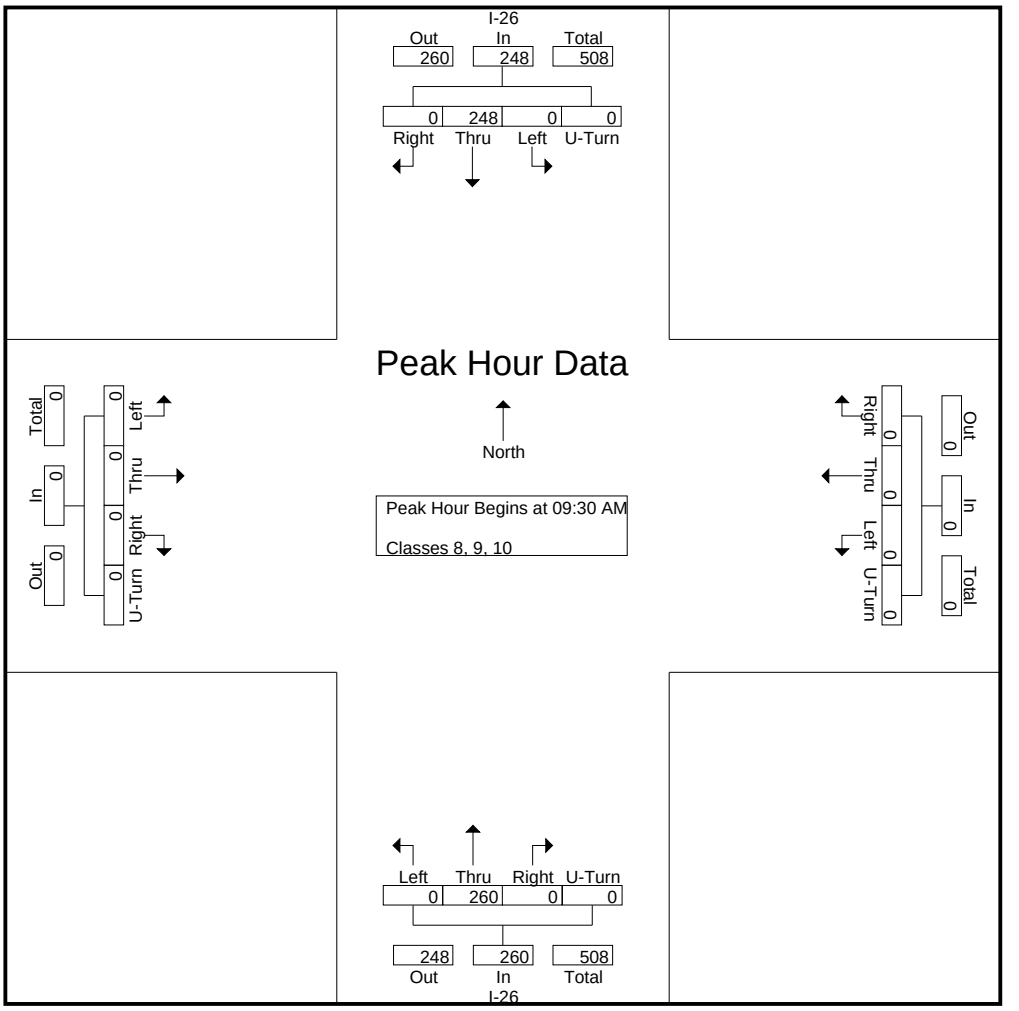

DocuSign Envelope ID: 5C03745C-4B01-4834-A65D-B77F558A4F46

Quality Counts

920 Blairhill Rd, Ste B-106
Charlotte, NC 28217

File Name : 15411718 - I-26 N of Brevard Rd
Site Code : 15411718
Start Date : 4/20/2021
Page No : 5

	I-26 Southbound					Westbound					I-26 Northbound					Eastbound					
Start Time	Left	Thru	Right	U-Turn	App. Total	Left	Thru	Right	U-Turn	App. Total	Left	Thru	Right	U-Turn	App. Total	Left	Thru	Right	U-Turn	App. Total	Int. Total
Peak Hour Analysis From 12:00 PM to 07:45 PM - Peak 1 of 1																					
Peak Hour for Entire Intersection Begins at 12:00 PM																					
12:00 PM	0	**71**	0	0	**71**	0	0	0	0	0	0	72	0	0	72	0	0	0	0	0	**143**
12:15 PM	0	57	0	0	57	0	0	0	0	0	0	**81**	0	0	**81**	0	0	0	0	0	138
12:30 PM	0	64	0	0	64	0	0	0	0	0	0	77	0	0	77	0	0	0	0	0	141
12:45 PM	0	61	0	0	61	0	0	0	0	0	0	75	0	0	75	0	0	0	0	0	136
Total Volume	0	253	0	0	253	0	0	0	0	0	0	305	0	0	305	0	0	0	0	0	558
% App. Total	0	100	0	0		0	0	0	0		0	100	0	0		0	0	0	0		
PHF	.000	.891	.000	.000	.891	.000	.000	.000	.000	.000	.000	.941	.000	.000	.941	.000	.000	.000	.000	.000	.976

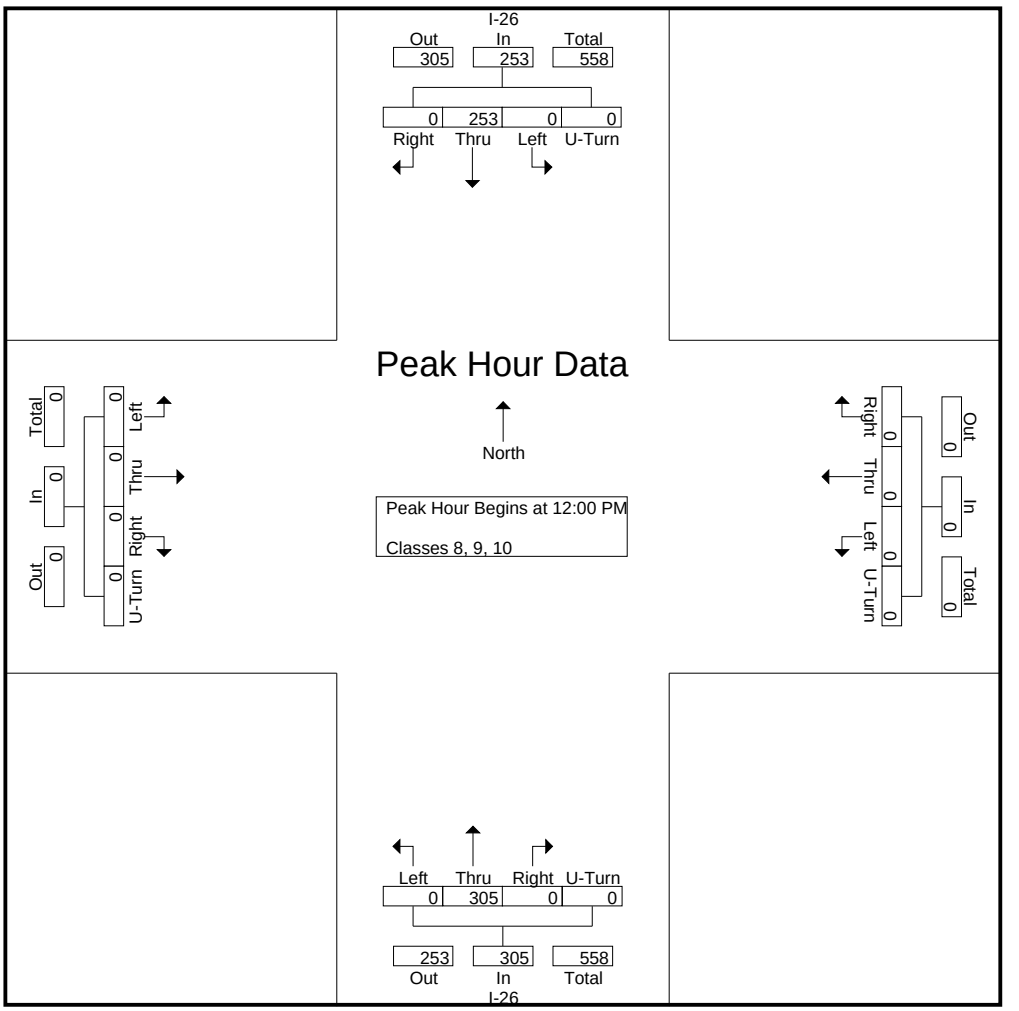

DocuSign Envelope ID: 5C03745C-4B01-4834-A65D-B77F558A4F46

Quality Counts

920 Blairhill Rd, Ste B-106
Charlotte, NC 28217

File Name : 15411718 - I-26 N of Brevard Rd
Site Code : 15411718
Start Date : 4/20/2021
Page No : 1

Groups Printed- Classes 11, 12, 13

	I-26 Southbound					Westbound					I-26 Northbound					Eastbound					
Start Time	Left	Thru	Right	U-Turn	App. Total	Left	Thru	Right	U-Turn	App. Total	Left	Thru	Right	U-Turn	App. Total	Left	Thru	Right	U-Turn	App. Total	Int. Total
06:00 AM	0	0	0	0	0	0	0	0	0	0	0	0	0	0	0	0	0	0	0	0	0
06:15 AM	0	0	0	0	0	0	0	0	0	0	0	3	0	0	3	0	0	0	0	0	3
06:30 AM	0	2	0	0	2	0	0	0	0	0	0	2	0	0	2	0	0	0	0	0	4
06:45 AM	0	4	0	0	4	0	0	0	0	0	0	3	0	0	3	0	0	0	0	0	7
Total	0	6	0	0	6	0	0	0	0	0	0	8	0	0	8	0	0	0	0	0	14
07:00 AM	0	2	0	0	2	0	0	0	0	0	0	1	0	0	1	0	0	0	0	0	3
07:15 AM	0	3	0	0	3	0	0	0	0	0	0	5	0	0	5	0	0	0	0	0	8
07:30 AM	0	0	0	0	0	0	0	0	0	0	0	3	0	0	3	0	0	0	0	0	3
07:45 AM	0	1	0	0	1	0	0	0	0	0	0	4	0	0	4	0	0	0	0	0	5
Total	0	6	0	0	6	0	0	0	0	0	0	13	0	0	13	0	0	0	0	0	19
08:00 AM	0	2	0	0	2	0	0	0	0	0	0	1	0	0	1	0	0	0	0	0	3
08:15 AM	0	1	0	0	1	0	0	0	0	0	0	1	0	0	1	0	0	0	0	0	2
08:30 AM	0	0	0	0	0	0	0	0	0	0	0	7	0	0	7	0	0	0	0	0	7
08:45 AM	0	3	0	0	3	0	0	0	0	0	0	1	0	0	1	0	0	0	0	0	4
Total	0	6	0	0	6	0	0	0	0	0	0	10	0	0	10	0	0	0	0	0	16
09:00 AM	0	2	0	0	2	0	0	0	0	0	0	5	0	0	5	0	0	0	0	0	7
09:15 AM	0	1	0	0	1	0	0	0	0	0	0	2	0	0	2	0	0	0	0	0	3
09:30 AM	0	1	0	0	1	0	0	0	0	0	0	3	0	0	3	0	0	0	0	0	4
09:45 AM	0	0	0	0	0	0	0	0	0	0	0	3	0	0	3	0	0	0	0	0	3
Total	0	4	0	0	4	0	0	0	0	0	0	13	0	0	13	0	0	0	0	0	17
10:00 AM	0	0	0	0	0	0	0	0	0	0	0	2	0	0	2	0	0	0	0	0	2
10:15 AM	0	0	0	0	0	0	0	0	0	0	0	2	0	0	2	0	0	0	0	0	2
10:30 AM	0	0	0	0	0	0	0	0	0	0	0	1	0	0	1	0	0	0	0	0	1
10:45 AM	0	0	0	0	0	0	0	0	0	0	0	0	0	0	0	0	0	0	0	0	0
Total	0	0	0	0	0	0	0	0	0	0	0	5	0	0	5	0	0	0	0	0	5
11:00 AM	0	0	0	0	0	0	0	0	0	0	0	2	0	0	2	0	0	0	0	0	2
11:15 AM	0	0	0	0	0	0	0	0	0	0	0	5	0	0	5	0	0	0	0	0	5
11:30 AM	0	2	0	0	2	0	0	0	0	0	0	3	0	0	3	0	0	0	0	0	5
11:45 AM	0	0	0	0	0	0	0	0	0	0	0	4	0	0	4	0	0	0	0	0	4
Total	0	2	0	0	2	0	0	0	0	0	0	14	0	0	14	0	0	0	0	0	16
12:00 PM	0	1	0	0	1	0	0	0	0	0	0	7	0	0	7	0	0	0	0	0	8
12:15 PM	0	4	0	0	4	0	0	0	0	0	0	2	0	0	2	0	0	0	0	0	6
12:30 PM	0	1	0	0	1	0	0	0	0	0	0	1	0	0	1	0	0	0	0	0	2
12:45 PM	0	1	0	0	1	0	0	0	0	0	0	1	0	0	1	0	0	0	0	0	2
Total	0	7	0	0	7	0	0	0	0	0	0	11	0	0	11	0	0	0	0	0	18
01:00 PM	0	5	0	0	5	0	0	0	0	0	0	0	0	0	0	0	0	0	0	0	5
01:15 PM	0	2	0	0	2	0	0	0	0	0	0	2	0	0	2	0	0	0	0	0	4
01:30 PM	0	1	0	0	1	0	0	0	0	0	0	1	0	0	1	0	0	0	0	0	2
01:45 PM	0	0	0	0	0	0	0	0	0	0	0	0	0	0	0	0	0	0	0	0	0
Total	0	8	0	0	8	0	0	0	0	0	0	3	0	0	3	0	0	0	0	0	11
02:00 PM	0	4	0	0	4	0	0	0	0	0	0	1	0	0	1	0	0	0	0	0	5
02:15 PM	0	1	0	0	1	0	0	0	0	0	0	1	0	0	1	0	0	0	0	0	2
02:30 PM	0	0	0	0	0	0	0	0	0	0	0	2	0	0	2	0	0	0	0	0	2
02:45 PM	0	1	0	0	1	0	0	0	0	0	0	0	0	0	0	0	0	0	0	0	1
Total	0	6	0	0	6	0	0	0	0	0	0	4	0	0	4	0	0	0	0	0	10
03:00 PM	0	2	0	0	2	0	0	0	0	0	0	0	0	0	0	0	0	0	0	0	2
03:15 PM	0	2	0	0	2	0	0	0	0	0	0	1	0	0	1	0	0	0	0	0	3
03:30 PM	0	4	0	0	4	0	0	0	0	0	0	0	0	0	0	0	0	0	0	0	4

DocuSign Envelope ID: 5C03745C-4B01-4834-A65D-B77F558A4F46

Quality Counts

920 Blairhill Rd, Ste B-106
Charlotte, NC 28217

File Name : 15411718 - I-26 N of Brevard Rd
Site Code : 15411718
Start Date : 4/20/2021

Groups Printed- Classes 11, 12, 13

	I-26 Southbound					Westbound					I-26 Northbound					Eastbound					
Start Time	Left	Thru	Right	U-Turn	App. Total	Left	Thru	Right	U-Turn	App. Total	Left	Thru	Right	U-Turn	App. Total	Left	Thru	Right	U-Turn	App. Total	Int. Total
03:45 PM	0	1	0	0	1	0	0	0	0	0	0	0	0	0	0	0	0	0	0	0	1
Total	0	9	0	0	9	0	0	0	0	0	0	1	0	0	1	0	0	0	0	0	10
04:00 PM	0	1	0	0	1	0	0	0	0	0	0	0	0	0	0	0	0	0	0	0	1
04:15 PM	0	2	0	0	2	0	0	0	0	0	0	0	0	0	0	0	0	0	0	0	2
04:30 PM	0	2	0	0	2	0	0	0	0	0	0	0	0	0	0	0	0	0	0	0	2
04:45 PM	0	1	0	0	1	0	0	0	0	0	0	1	0	0	1	0	0	0	0	0	2
Total	0	6	0	0	6	0	0	0	0	0	0	1	0	0	1	0	0	0	0	0	7
05:00 PM	0	2	0	0	2	0	0	0	0	0	0	0	0	0	0	0	0	0	0	0	2
05:15 PM	0	3	0	0	3	0	0	0	0	0	0	0	0	0	0	0	0	0	0	0	3
05:30 PM	0	3	0	0	3	0	0	0	0	0	0	0	0	0	0	0	0	0	0	0	3
05:45 PM	0	10	0	0	10	0	0	0	0	0	0	0	0	0	0	0	0	0	0	0	10
Total	0	18	0	0	18	0	0	0	0	0	0	0	0	0	0	0	0	0	0	0	18
06:00 PM	0	1	0	0	1	0	0	0	0	0	0	1	0	0	1	0	0	0	0	0	2
06:15 PM	0	2	0	0	2	0	0	0	0	0	0	0	0	0	0	0	0	0	0	0	2
06:30 PM	0	2	0	0	2	0	0	0	0	0	0	0	0	0	0	0	0	0	0	0	2
06:45 PM	0	2	0	0	2	0	0	0	0	0	0	0	0	0	0	0	0	0	0	0	2
Total	0	7	0	0	7	0	0	0	0	0	0	1	0	0	1	0	0	0	0	0	8
07:00 PM	0	0	0	0	0	0	0	0	0	0	0	0	0	0	0	0	0	0	0	0	0
07:15 PM	0	0	0	0	0	0	0	0	0	0	0	0	0	0	0	0	0	0	0	0	0
07:30 PM	0	0	0	0	0	0	0	0	0	0	0	1	0	0	1	0	0	0	0	0	1
07:45 PM	0	0	0	0	0	0	0	0	0	0	0	1	0	0	1	0	0	0	0	0	1
Total	0	0	0	0	0	0	0	0	0	0	0	2	0	0	2	0	0	0	0	0	2
Grand Total	0	85	0	0	85	0	0	0	0	0	0	86	0	0	86	0	0	0	0	0	171
Apprch %	0	100	0	0		0	0	0	0		0	100	0	0		0	0	0	0		
Total %	0	49.7	0	0	49.7	0	0	0	0	0	0	50.3	0	0	50.3	0	0	0	0	0	

DocuSign Envelope ID: 5C03745C-4B01-4834-A65D-B77F558A4F46

Quality Counts

920 Blairhill Rd, Ste B-106
Charlotte, NC 28217

File Name : 15411718 - I-26 N of Brevard Rd
Site Code : 15411718
Start Date : 4/20/2021
Page No : 3

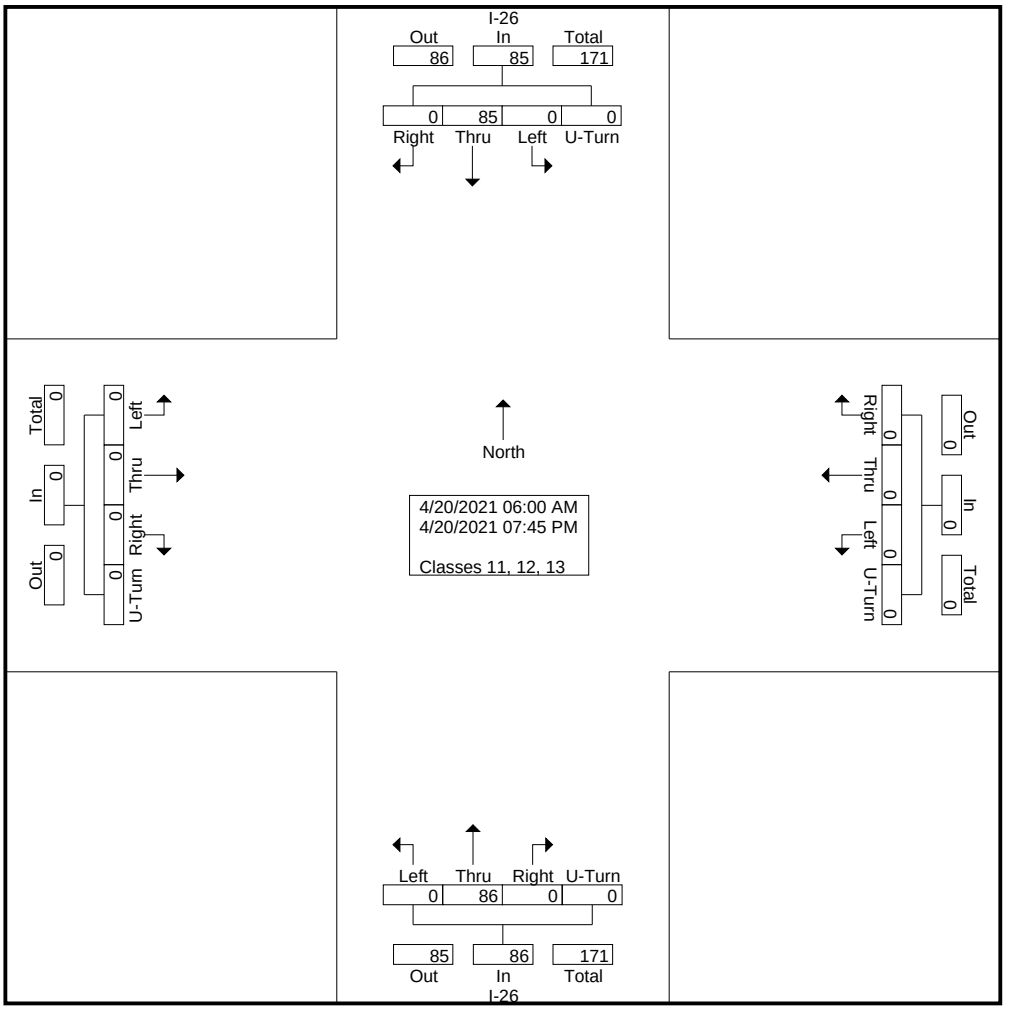

DocuSign Envelope ID: 5C03745C-4B01-4834-A65D-B77F558A4F46

Quality Counts

920 Blairhill Rd, Ste B-106
Charlotte, NC 28217

File Name : 15411718 - I-26 N of Brevard Rd
Site Code : 15411718
Start Date : 4/20/2021
Page No : 4

	I-26 Southbound					Westbound					I-26 Northbound					Eastbound					
Start Time	Left	Thru	Right	U-Turn	App. Total	Left	Thru	Right	U-Turn	App. Total	Left	Thru	Right	U-Turn	App. Total	Left	Thru	Right	U-Turn	App. Total	Int. Total
Peak Hour Analysis From 06:00 AM to 11:45 AM - Peak 1 of 1																					
Peak Hour for Entire Intersection Begins at 06:30 AM																					
06:30 AM	0	2	0	0	2	0	0	0	0	0	0	2	0	0	2	0	0	0	0	0	4
06:45 AM	0	**4**	0	0	**4**	0	0	0	0	0	0	3	0	0	3	0	0	0	0	0	7
07:00 AM	0	2	0	0	2	0	0	0	0	0	0	1	0	0	1	0	0	0	0	0	3
07:15 AM	0	3	0	0	3	0	0	0	0	0	0	**5**	0	0	**5**	0	0	0	0	0	**8**
Total Volume	0	11	0	0	11	0	0	0	0	0	0	11	0	0	11	0	0	0	0	0	22
% App. Total	0	100	0	0		0	0	0	0		0	100	0	0		0	0	0	0		
PHF	.000	.688	.000	.000	.688	.000	.000	.000	.000	.000	.000	.550	.000	.000	.550	.000	.000	.000	.000	.000	.688

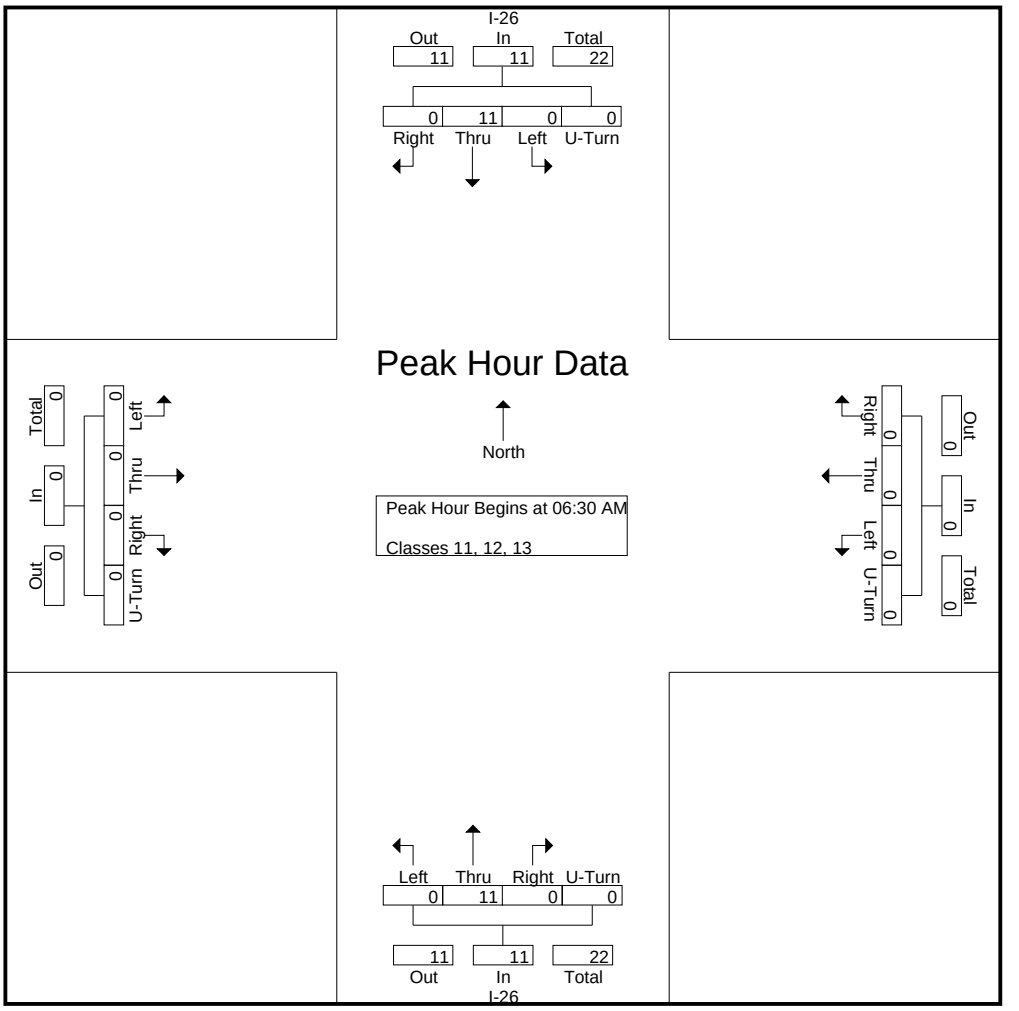

DocuSign Envelope ID: 5C03745C-4B01-4834-A65D-B77F558A4F46

Quality Counts

920 Blairhill Rd, Ste B-106
Charlotte, NC 28217

File Name : 15411718 - I-26 N of Brevard Rd
Site Code : 15411718
Start Date : 4/20/2021
Page No : 5

	I-26 Southbound					Westbound					I-26 Northbound					Eastbound					
Start Time	Left	Thru	Right	U-Turn	App. Total	Left	Thru	Right	U-Turn	App. Total	Left	Thru	Right	U-Turn	App. Total	Left	Thru	Right	U-Turn	App. Total	Int. Total
Peak Hour Analysis From 12:00 PM to 07:45 PM - Peak 1 of 1																					
Peak Hour for Entire Intersection Begins at 12:00 PM																					
12:00 PM	0	1	0	0	1	0	0	0	0	0	0	**7**	0	0	**7**	0	0	0	0	0	**8**
12:15 PM	0	**4**	0	0	**4**	0	0	0	0	0	0	2	0	0	2	0	0	0	0	0	6
12:30 PM	0	1	0	0	1	0	0	0	0	0	0	1	0	0	1	0	0	0	0	0	2
12:45 PM	0	1	0	0	1	0	0	0	0	0	0	1	0	0	1	0	0	0	0	0	2
Total Volume	0	7	0	0	7	0	0	0	0	0	0	11	0	0	11	0	0	0	0	0	18
% App. Total	0	100	0	0		0	0	0	0		0	100	0	0		0	0	0	0		
PHF	.000	.438	.000	.000	.438	.000	.000	.000	.000	.000	.000	.393	.000	.000	.393	.000	.000	.000	.000	.000	.563

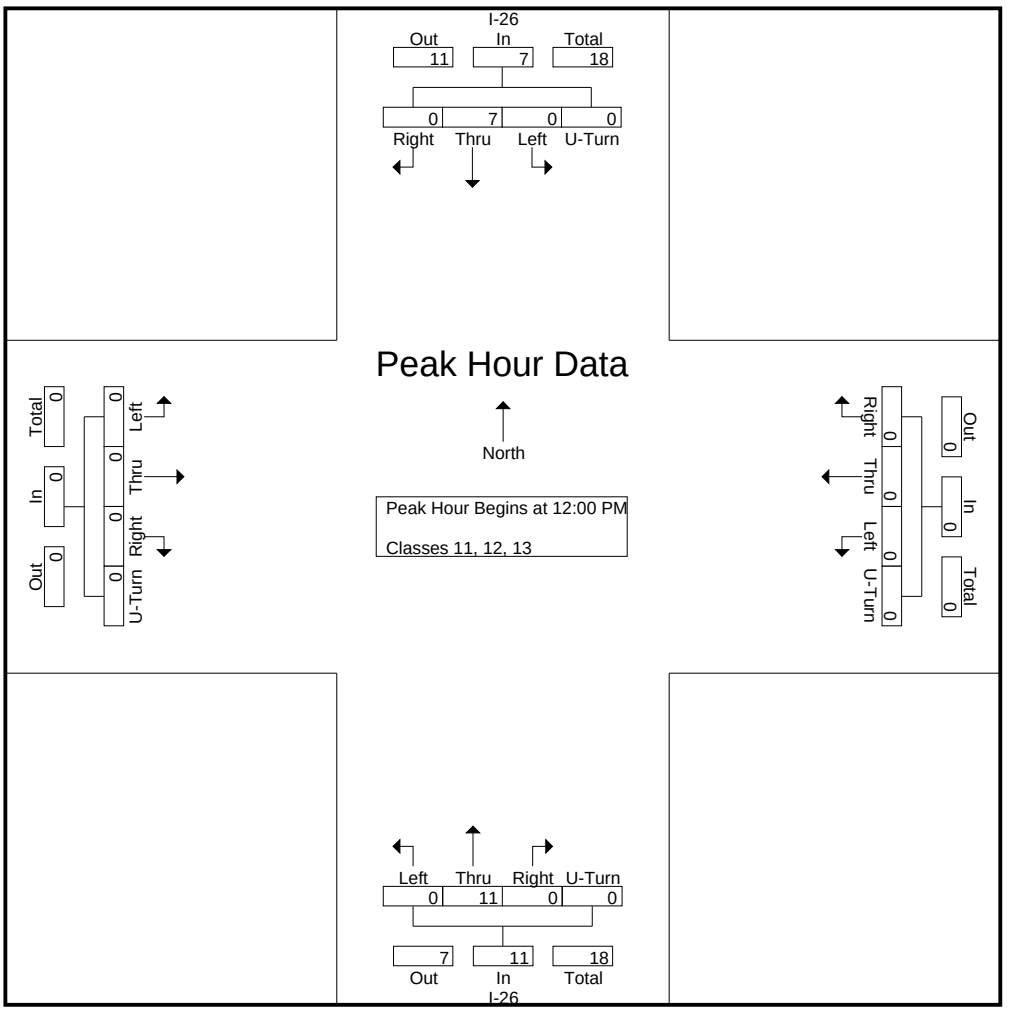

DocuSign Envelope ID: 5C03745C-4B01-4834-A65D-B77F558A4F46

Quality Counts

920 Blairhill Rd, Ste B-106
Charlotte, NC 28217

File Name : 15411718 - I-26 N of Brevard Rd
Site Code : 15411718
Start Date : 4/20/2021
Page No : 1

Groups Printed- Bikes, Peds

	I-26 Southbound					Westbound					I-26 Northbound					Eastbound					
Start Time	Left	Thru	Right	Peds	App. Total	Left	Thru	Right	Peds	App. Total	Left	Thru	Right	Peds	App. Total	Left	Thru	Right	Peds	App. Total	Int. Total
06:00 AM	0	0	0	0	0	0	0	0	0	0	0	0	0	0	0	0	0	0	0	0	0
06:15 AM	0	0	0	0	0	0	0	0	0	0	0	0	0	0	0	0	0	0	0	0	0
06:30 AM	0	0	0	0	0	0	0	0	0	0	0	0	0	0	0	0	0	0	0	0	0
06:45 AM	0	0	0	0	0	0	0	0	0	0	0	0	0	0	0	0	0	0	0	0	0
Total	0	0	0	0	0	0	0	0	0	0	0	0	0	0	0	0	0	0	0	0	0
07:00 AM	0	0	0	0	0	0	0	0	0	0	0	0	0	0	0	0	0	0	0	0	0
07:15 AM	0	0	0	0	0	0	0	0	0	0	0	0	0	0	0	0	0	0	0	0	0
07:30 AM	0	0	0	0	0	0	0	0	0	0	0	0	0	0	0	0	0	0	0	0	0
07:45 AM	0	0	0	0	0	0	0	0	0	0	0	0	0	0	0	0	0	0	0	0	0
Total	0	0	0	0	0	0	0	0	0	0	0	0	0	0	0	0	0	0	0	0	0
08:00 AM	0	0	0	0	0	0	0	0	0	0	0	0	0	0	0	0	0	0	0	0	0
08:15 AM	0	0	0	0	0	0	0	0	0	0	0	0	0	0	0	0	0	0	0	0	0
08:30 AM	0	0	0	0	0	0	0	0	0	0	0	0	0	0	0	0	0	0	0	0	0
08:45 AM	0	0	0	0	0	0	0	0	0	0	0	0	0	0	0	0	0	0	0	0	0
Total	0	0	0	0	0	0	0	0	0	0	0	0	0	0	0	0	0	0	0	0	0
09:00 AM	0	0	0	0	0	0	0	0	0	0	0	0	0	0	0	0	0	0	0	0	0
09:15 AM	0	0	0	0	0	0	0	0	0	0	0	0	0	0	0	0	0	0	0	0	0
09:30 AM	0	0	0	0	0	0	0	0	0	0	0	0	0	0	0	0	0	0	0	0	0
09:45 AM	0	0	0	0	0	0	0	0	0	0	0	0	0	0	0	0	0	0	0	0	0
Total	0	0	0	0	0	0	0	0	0	0	0	0	0	0	0	0	0	0	0	0	0
10:00 AM	0	0	0	0	0	0	0	0	0	0	0	0	0	0	0	0	0	0	0	0	0
10:15 AM	0	0	0	0	0	0	0	0	0	0	0	0	0	0	0	0	0	0	0	0	0
10:30 AM	0	0	0	0	0	0	0	0	0	0	0	0	0	0	0	0	0	0	0	0	0
10:45 AM	0	0	0	0	0	0	0	0	0	0	0	0	0	0	0	0	0	0	0	0	0
Total	0	0	0	0	0	0	0	0	0	0	0	0	0	0	0	0	0	0	0	0	0
11:00 AM	0	0	0	0	0	0	0	0	0	0	0	0	0	0	0	0	0	0	0	0	0
11:15 AM	0	0	0	0	0	0	0	0	0	0	0	0	0	0	0	0	0	0	0	0	0
11:30 AM	0	0	0	0	0	0	0	0	0	0	0	0	0	0	0	0	0	0	0	0	0
11:45 AM	0	0	0	0	0	0	0	0	0	0	0	0	0	0	0	0	0	0	0	0	0
Total	0	0	0	0	0	0	0	0	0	0	0	0	0	0	0	0	0	0	0	0	0
12:00 PM	0	0	0	0	0	0	0	0	0	0	0	0	0	0	0	0	0	0	0	0	0
12:15 PM	0	0	0	0	0	0	0	0	0	0	0	0	0	0	0	0	0	0	0	0	0
12:30 PM	0	0	0	0	0	0	0	0	0	0	0	0	0	0	0	0	0	0	0	0	0
12:45 PM	0	0	0	0	0	0	0	0	0	0	0	0	0	0	0	0	0	0	0	0	0
Total	0	0	0	0	0	0	0	0	0	0	0	0	0	0	0	0	0	0	0	0	0
01:00 PM	0	0	0	0	0	0	0	0	0	0	0	0	0	0	0	0	0	0	0	0	0
01:15 PM	0	0	0	0	0	0	0	0	0	0	0	0	0	0	0	0	0	0	0	0	0
01:30 PM	0	0	0	0	0	0	0	0	0	0	0	0	0	0	0	0	0	0	0	0	0
01:45 PM	0	0	0	0	0	0	0	0	0	0	0	0	0	0	0	0	0	0	0	0	0
Total	0	0	0	0	0	0	0	0	0	0	0	0	0	0	0	0	0	0	0	0	0
02:00 PM	0	0	0	0	0	0	0	0	0	0	0	0	0	0	0	0	0	0	0	0	0
02:15 PM	0	0	0	0	0	0	0	0	0	0	0	0	0	0	0	0	0	0	0	0	0
02:30 PM	0	0	0	0	0	0	0	0	0	0	0	0	0	0	0	0	0	0	0	0	0
02:45 PM	0	0	0	0	0	0	0	0	0	0	0	0	0	0	0	0	0	0	0	0	0
Total	0	0	0	0	0	0	0	0	0	0	0	0	0	0	0	0	0	0	0	0	0
03:00 PM	0	0	0	0	0	0	0	0	0	0	0	0	0	0	0	0	0	0	0	0	0
03:15 PM	0	0	0	0	0	0	0	0	0	0	0	0	0	0	0	0	0	0	0	0	0
03:30 PM	0	0	0	0	0	0	0	0	0	0	0	0	0	0	0	0	0	0	0	0	0

DocuSign Envelope ID: 5C03745C-4B01-4834-A65D-B77F558A4F46

Quality Counts

920 Blairhill Rd, Ste B-106
Charlotte, NC 28217

File Name : 15411718 - I-26 N of Brevard Rd
Site Code : 15411718
Start Date : 4/20/2021

Groups Printed- Bikes, Peds

	I-26 Southbound					Westbound					I-26 Northbound					Eastbound					
Start Time	Left	Thru	Right	Peds	App. Total	Left	Thru	Right	Peds	App. Total	Left	Thru	Right	Peds	App. Total	Left	Thru	Right	Peds	App. Total	Int. Total
03:45 PM	0	0	0	0	0	0	0	0	0	0	0	0	0	0	0	0	0	0	0	0	0
Total	0	0	0	0	0	0	0	0	0	0	0	0	0	0	0	0	0	0	0	0	0
04:00 PM	0	0	0	0	0	0	0	0	0	0	0	0	0	0	0	0	0	0	0	0	0
04:15 PM	0	0	0	0	0	0	0	0	0	0	0	0	0	0	0	0	0	0	0	0	0
04:30 PM	0	0	0	0	0	0	0	0	0	0	0	0	0	0	0	0	0	0	0	0	0
04:45 PM	0	0	0	0	0	0	0	0	0	0	0	0	0	0	0	0	0	0	0	0	0
Total	0	0	0	0	0	0	0	0	0	0	0	0	0	0	0	0	0	0	0	0	0
05:00 PM	0	0	0	0	0	0	0	0	0	0	0	0	0	0	0	0	0	0	0	0	0
05:15 PM	0	0	0	0	0	0	0	0	0	0	0	0	0	0	0	0	0	0	0	0	0
05:30 PM	0	0	0	0	0	0	0	0	0	0	0	0	0	0	0	0	0	0	0	0	0
05:45 PM	0	0	0	0	0	0	0	0	0	0	0	0	0	0	0	0	0	0	0	0	0
Total	0	0	0	0	0	0	0	0	0	0	0	0	0	0	0	0	0	0	0	0	0
06:00 PM	0	0	0	0	0	0	0	0	0	0	0	0	0	0	0	0	0	0	0	0	0
06:15 PM	0	0	0	0	0	0	0	0	0	0	0	0	0	0	0	0	0	0	0	0	0
06:30 PM	0	0	0	0	0	0	0	0	0	0	0	0	0	0	0	0	0	0	0	0	0
06:45 PM	0	0	0	0	0	0	0	0	0	0	0	0	0	0	0	0	0	0	0	0	0
Total	0	0	0	0	0	0	0	0	0	0	0	0	0	0	0	0	0	0	0	0	0
07:00 PM	0	0	0	0	0	0	0	0	0	0	0	0	0	0	0	0	0	0	0	0	0
07:15 PM	0	0	0	0	0	0	0	0	0	0	0	0	0	0	0	0	0	0	0	0	0
07:30 PM	0	0	0	0	0	0	0	0	0	0	0	0	0	0	0	0	0	0	0	0	0
07:45 PM	0	0	0	0	0	0	0	0	0	0	0	0	0	0	0	0	0	0	0	0	0
Total	0	0	0	0	0	0	0	0	0	0	0	0	0	0	0	0	0	0	0	0	0
Grand Total	0	0	0	0	0	0	0	0	0	0	0	0	0	0	0	0	0	0	0	0	0
Apprch %	0	0	0	0		0	0	0	0		0	0	0	0		0	0	0	0		
Total %																					

DocuSign Envelope ID: 5C03745C-4B01-4834-A65D-B77F558A4F46

Quality Counts

920 Blairhill Rd, Ste B-106
Charlotte, NC 28217

File Name : 15411718 - I-26 N of Brevard Rd
Site Code : 15411718
Start Date : 4/20/2021
Page No : 3

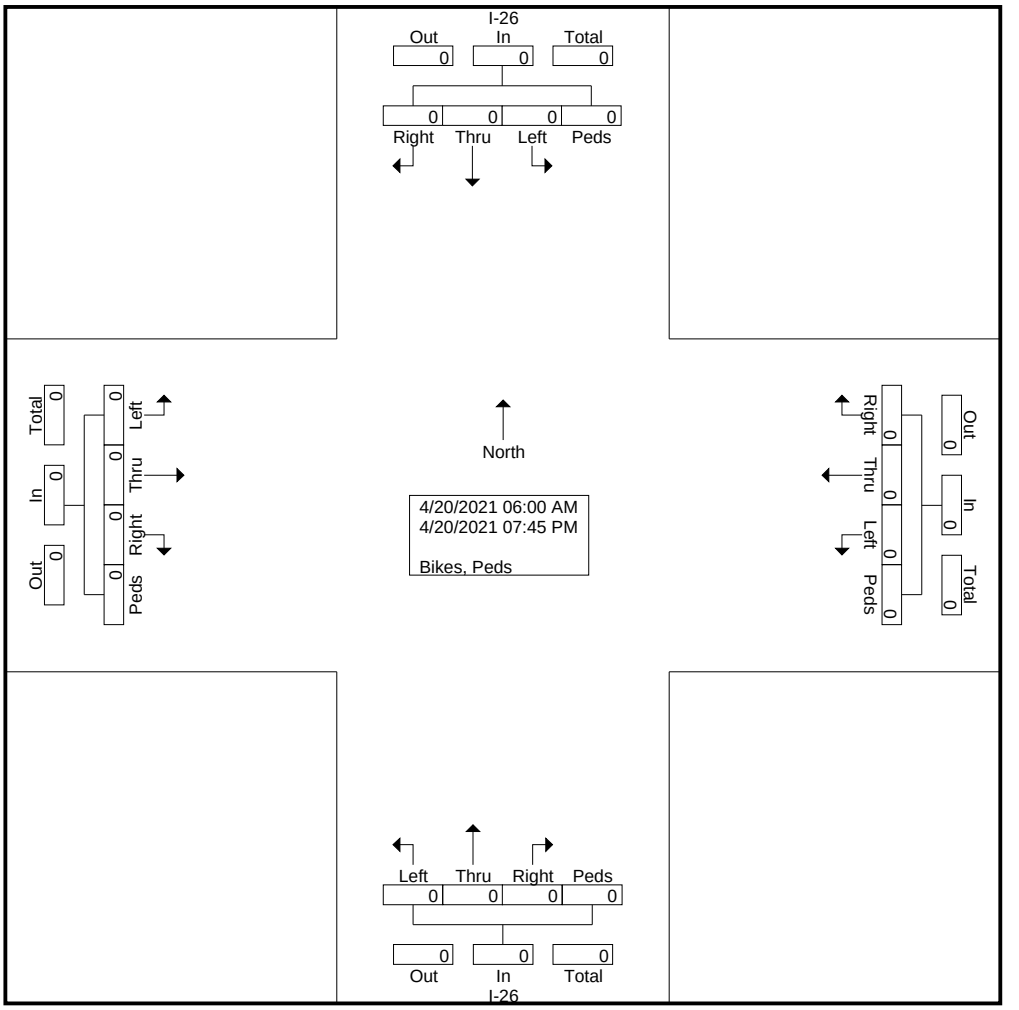

DocuSign Envelope ID: 5C03745C-4B01-4834-A65D-B77F558A4F46

Quality Counts

920 Blairhill Rd, Ste B-106
Charlotte, NC 28217

File Name : 15411718 - I-26 N of Brevard Rd
Site Code : 15411718
Start Date : 4/20/2021
Page No : 4

	I-26 Southbound					Westbound					I-26 Northbound					Eastbound					
Start Time	Left	Thru	Right	Peds	App. Total	Left	Thru	Right	Peds	App. Total	Left	Thru	Right	Peds	App. Total	Left	Thru	Right	Peds	App. Total	Int. Total
Peak Hour Analysis From 06:00 AM to 11:45 AM - Peak 1 of 1																					
Peak Hour for Entire Intersection Begins at 06:00 AM																					
06:00 AM	0	0	0	0	0	0	0	0	0	0	0	0	0	0	0	0	0	0	0	0	0
06:15 AM	0	0	0	0	0	0	0	0	0	0	0	0	0	0	0	0	0	0	0	0	0
06:30 AM	0	0	0	0	0	0	0	0	0	0	0	0	0	0	0	0	0	0	0	0	0
06:45 AM	0	0	0	0	0	0	0	0	0	0	0	0	0	0	0	0	0	0	0	0	0
Total Volume	0	0	0	0	0	0	0	0	0	0	0	0	0	0	0	0	0	0	0	0	0
% App. Total	0	0	0	0		0	0	0	0		0	0	0	0		0	0	0	0		
PHF	.000	.000	.000	.000	.000	.000	.000	.000	.000	.000	.000	.000	.000	.000	.000	.000	.000	.000	.000	.000	.000

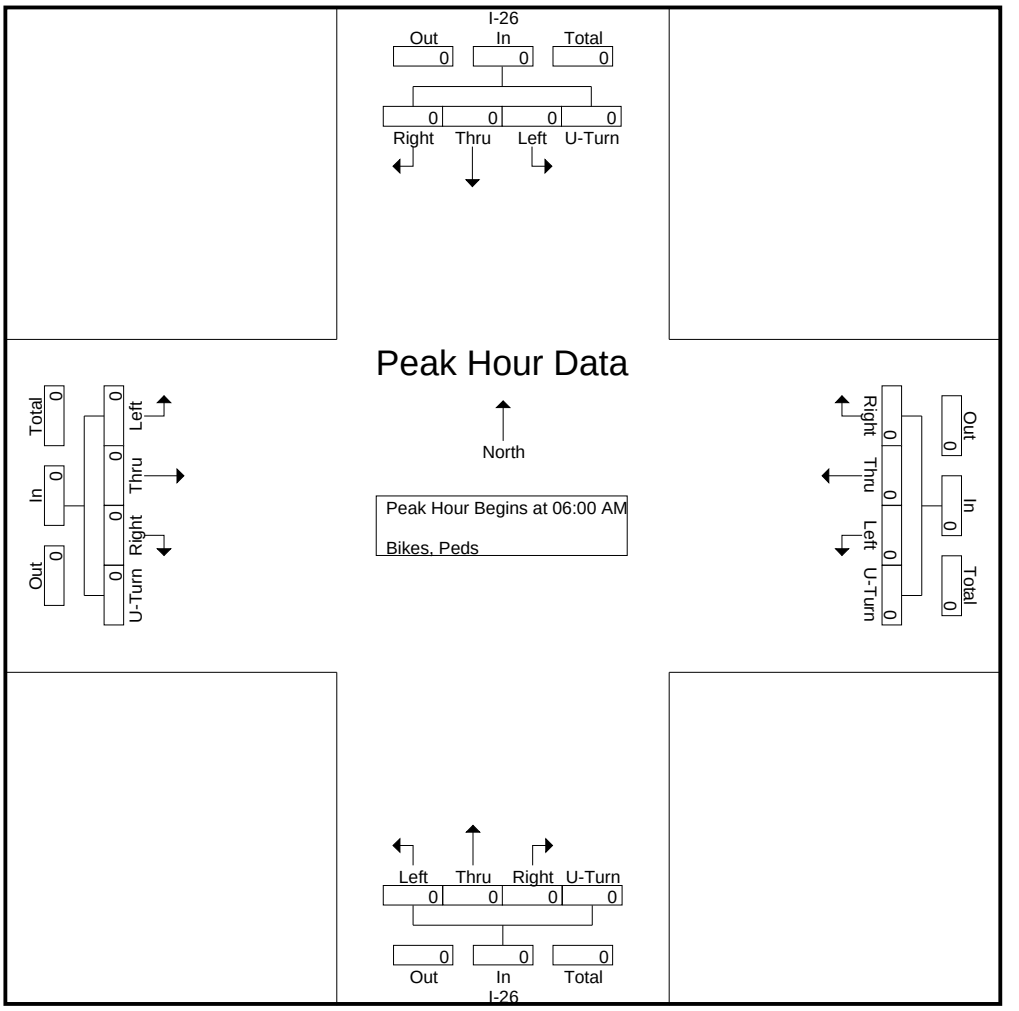

DocuSign Envelope ID: 5C03745C-4B01-4834-A65D-B77F558A4F46

Quality Counts

920 Blairhill Rd, Ste B-106
Charlotte, NC 28217

File Name : 15411718 - I-26 N of Brevard Rd
Site Code : 15411718
Start Date : 4/20/2021
Page No : 5

	I-26 Southbound					Westbound					I-26 Northbound					Eastbound					
Start Time	Left	Thru	Right	Peds	App. Total	Left	Thru	Right	Peds	App. Total	Left	Thru	Right	Peds	App. Total	Left	Thru	Right	Peds	App. Total	Int. Total
Peak Hour Analysis From 12:00 PM to 07:45 PM - Peak 1 of 1																					
Peak Hour for Entire Intersection Begins at 12:00 PM																					
12:00 PM	0	0	0	0	0	0	0	0	0	0	0	0	0	0	0	0	0	0	0	0	0
12:15 PM	0	0	0	0	0	0	0	0	0	0	0	0	0	0	0	0	0	0	0	0	0
12:30 PM	0	0	0	0	0	0	0	0	0	0	0	0	0	0	0	0	0	0	0	0	0
12:45 PM	0	0	0	0	0	0	0	0	0	0	0	0	0	0	0	0	0	0	0	0	0
Total Volume	0	0	0	0	0	0	0	0	0	0	0	0	0	0	0	0	0	0	0	0	0
% App. Total	0	0	0	0		0	0	0	0		0	0	0	0		0	0	0	0		
PHF	.000	.000	.000	.000	.000	.000	.000	.000	.000	.000	.000	.000	.000	.000	.000	.000	.000	.000	.000	.000	.000

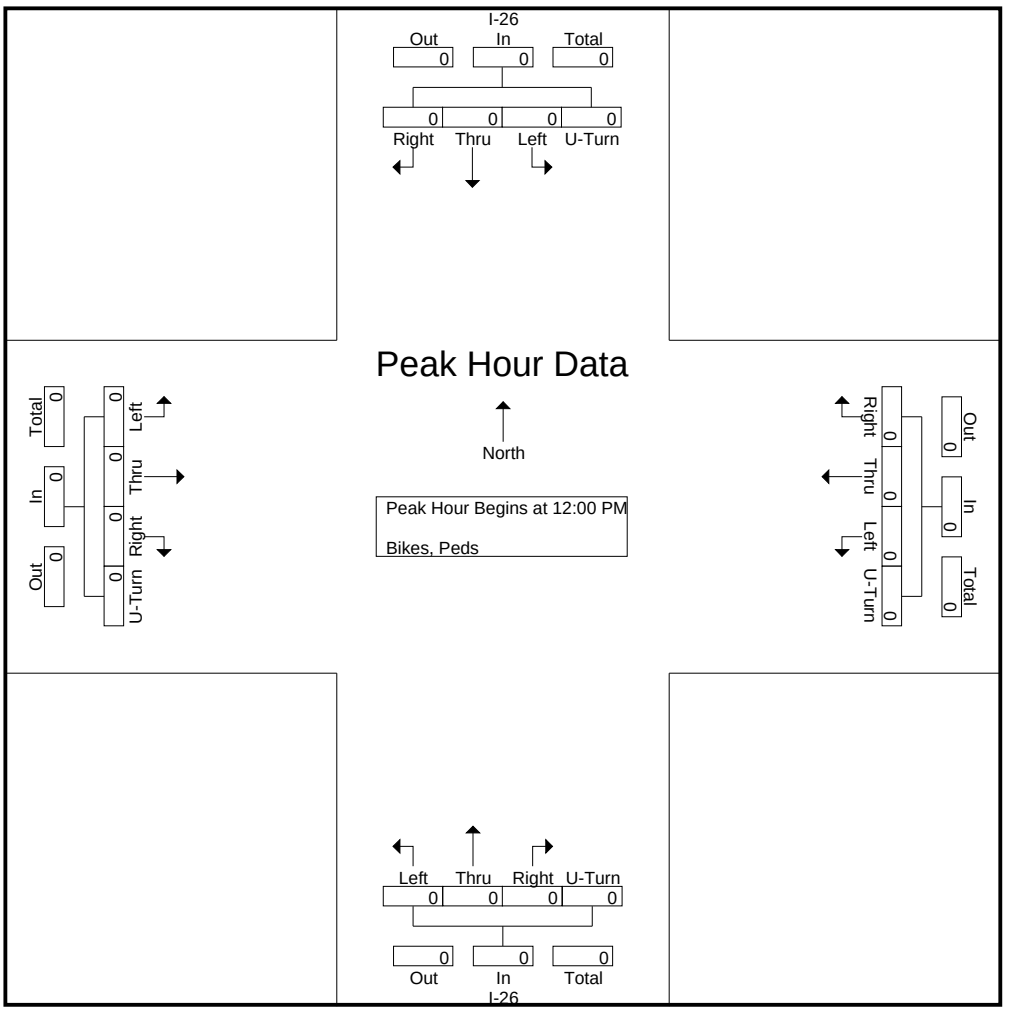

DocuSign Envelope ID: 5C03745C-4B01-4834-A65D-B77F558A4F46

QUALITY COUNTS LLC
920 Blairhill Rd, Suite 106, Charlotte, NC 28217
704.215.4616

Count Number: 15411719
County: Buncombe
City: Arden
Division: 13

Location: I-26 N of Long Shoals Rd
General Location Type: Mainline
Count Type: Turning Movement (Classification)
Count Start Date: 4/20/2021
Time: 6:00 AM – 8:00 PM
Volume: 64,601

Maximum Temperature: 69° F
Minimum Temperature: 40° F
Precipitation: 0.00 in
Snowfall: 0.0 in
Average Sky Cover: 0.2
Weather Conditions: Clear

1. **School in Session:** Yes
2. **Pedestrians Counted**: Yes
3. **Disabled Pedestrians Present**: No
   Description and Approaches Used: N/A
4. **Counted By**: Nicole McCreary
5. **Data Processor**: Jon B
6. **Signal Inventory**: N/A
7. **Data Collection Method**: Video/Count Board
8. **Equipment Operating Properly**: Yes
9. **Area Lighting Present**: No
10. **Nearest Roadway Stop Sign < 300 ft:** No
    If yes, list approaches: N/A
11. **Nearest Traffic Signal < 300 ft:** No
    If yes, list approaches: N/A
12. **At-Grade Railroad Crossing Present (<200 ft):** No
    If yes, list approaches & distance: N/A
13. **Other:**

↑ North

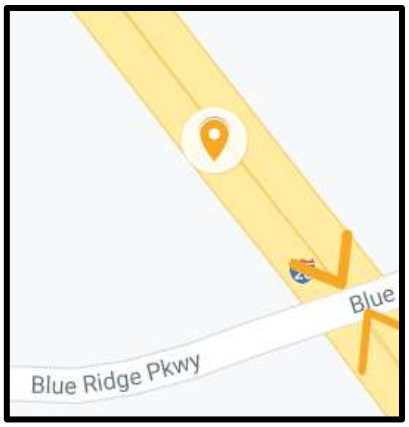

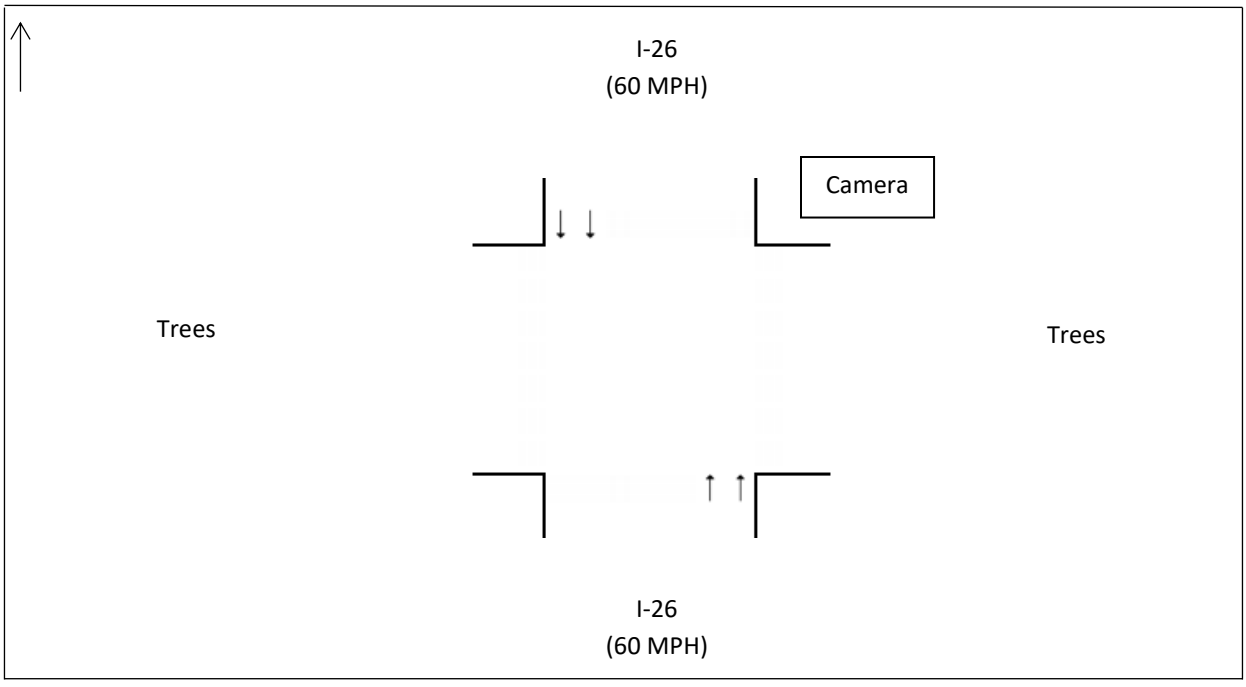

DocuSign Envelope ID: 5C03745C-4B01-4834-A65D-B77F558A4F46

Quality Counts

920 Blairhill Rd, Ste B-106
Charlotte, NC 28217

File Name : 15411719 - I-26 N of Long Shoals Rd
Site Code : 15411719
Start Date : 4/20/2021
Page No : 1

Groups Printed- Classes 1, 2, 3 - Classes 4, 5, 6, 7 - Classes 8, 9, 10 - Classes 11, 12, 13

	I-26 Southbound					Westbound					I-26 Northbound					Eastbound					
Start Time	Left	Thru	Right	U-Turn	App. Total	Left	Thru	Right	U-Turn	App. Total	Left	Thru	Right	U-Turn	App. Total	Left	Thru	Right	U-Turn	App. Total	Int. Total
06:00 AM	0	260	0	0	260	0	0	0	0	0	0	227	0	0	227	0	0	0	0	0	487
06:15 AM	0	413	0	0	413	0	0	0	0	0	0	319	0	0	319	0	0	0	0	0	732
06:30 AM	0	527	0	0	527	0	0	0	0	0	0	387	0	0	387	0	0	0	0	0	914
06:45 AM	0	560	0	0	560	0	0	0	0	0	0	481	0	0	481	0	0	0	0	0	1041
Total	0	1760	0	0	1760	0	0	0	0	0	0	1414	0	0	1414	0	0	0	0	0	3174
07:00 AM	0	507	0	0	507	0	0	0	0	0	0	519	0	0	519	0	0	0	0	0	1026
07:15 AM	0	667	0	0	667	0	0	0	0	0	0	669	0	0	669	0	0	0	0	0	1336
07:30 AM	0	795	0	0	795	0	0	0	0	0	0	721	0	0	721	0	0	0	0	0	1516
07:45 AM	0	819	0	0	819	0	0	0	0	0	0	775	0	0	775	0	0	0	0	0	1594
Total	0	2788	0	0	2788	0	0	0	0	0	0	2684	0	0	2684	0	0	0	0	0	5472
08:00 AM	0	668	0	0	668	0	0	0	0	0	0	705	0	0	705	0	0	0	0	0	1373
08:15 AM	0	652	0	0	652	0	0	0	0	0	0	644	0	0	644	0	0	0	0	0	1296
08:30 AM	0	625	0	0	625	0	0	0	0	0	0	629	0	0	629	0	0	0	0	0	1254
08:45 AM	0	666	0	0	666	0	0	0	0	0	0	562	0	0	562	0	0	0	0	0	1228
Total	0	2611	0	0	2611	0	0	0	0	0	0	2540	0	0	2540	0	0	0	0	0	5151
09:00 AM	0	580	0	0	580	0	0	0	0	0	0	558	0	0	558	0	0	0	0	0	1138
09:15 AM	0	554	0	0	554	0	0	0	0	0	0	534	0	0	534	0	0	0	0	0	1088
09:30 AM	0	573	0	0	573	0	0	0	0	0	0	547	0	0	547	0	0	0	0	0	1120
09:45 AM	0	609	0	0	609	0	0	0	0	0	0	537	0	0	537	0	0	0	0	0	1146
Total	0	2316	0	0	2316	0	0	0	0	0	0	2176	0	0	2176	0	0	0	0	0	4492
10:00 AM	0	516	0	0	516	0	0	0	0	0	0	514	0	0	514	0	0	0	0	0	1030
10:15 AM	0	528	0	0	528	0	0	0	0	0	0	572	0	0	572	0	0	0	0	0	1100
10:30 AM	0	576	0	0	576	0	0	0	0	0	0	577	0	0	577	0	0	0	0	0	1153
10:45 AM	0	533	0	0	533	0	0	0	0	0	0	590	0	0	590	0	0	0	0	0	1123
Total	0	2153	0	0	2153	0	0	0	0	0	0	2253	0	0	2253	0	0	0	0	0	4406
11:00 AM	0	587	0	0	587	0	0	0	0	0	0	551	0	0	551	0	0	0	0	0	1138
11:15 AM	0	549	0	0	549	0	0	0	0	0	0	582	0	0	582	0	0	0	0	0	1131
11:30 AM	0	565	0	0	565	0	0	0	0	0	0	575	0	0	575	0	0	0	0	0	1140
11:45 AM	0	563	0	0	563	0	0	0	0	0	0	579	0	0	579	0	0	0	0	0	1142
Total	0	2264	0	0	2264	0	0	0	0	0	0	2287	0	0	2287	0	0	0	0	0	4551
12:00 PM	0	568	0	0	568	0	0	0	0	0	0	566	0	0	566	0	0	0	0	0	1134
12:15 PM	0	669	0	0	669	0	0	0	0	0	0	580	0	0	580	0	0	0	0	0	1249
12:30 PM	0	597	0	0	597	0	0	0	0	0	0	558	0	0	558	0	0	0	0	0	1155
12:45 PM	0	565	0	0	565	0	0	0	0	0	0	571	0	0	571	0	0	0	0	0	1136
Total	0	2399	0	0	2399	0	0	0	0	0	0	2275	0	0	2275	0	0	0	0	0	4674
01:00 PM	0	578	0	0	578	0	0	0	0	0	0	571	0	0	571	0	0	0	0	0	1149
01:15 PM	0	594	0	0	594	0	0	0	0	0	0	592	0	0	592	0	0	0	0	0	1186
01:30 PM	0	605	0	0	605	0	0	0	0	0	0	614	0	0	614	0	0	0	0	0	1219
01:45 PM	0	582	0	0	582	0	0	0	0	0	0	629	0	0	629	0	0	0	0	0	1211
Total	0	2359	0	0	2359	0	0	0	0	0	0	2406	0	0	2406	0	0	0	0	0	4765
02:00 PM	0	622	0	0	622	0	0	0	0	0	0	603	0	0	603	0	0	0	0	0	1225
02:15 PM	0	674	0	0	674	0	0	0	0	0	0	666	0	0	666	0	0	0	0	0	1340
02:30 PM	0	612	0	0	612	0	0	0	0	0	0	671	0	0	671	0	0	0	0	0	1283
02:45 PM	0	638	0	0	638	0	0	0	0	0	0	638	0	0	638	0	0	0	0	0	1276
Total	0	2546	0	0	2546	0	0	0	0	0	0	2578	0	0	2578	0	0	0	0	0	5124
03:00 PM	0	637	0	0	637	0	0	0	0	0	0	681	0	0	681	0	0	0	0	0	1318
03:15 PM	0	681	0	0	681	0	0	0	0	0	0	704	0	0	704	0	0	0	0	0	1385
03:30 PM	0	564	0	0	564	0	0	0	0	0	0	749	0	0	749	0	0	0	0	0	1313

DocuSign Envelope ID: 5C03745C-4B01-4834-A65D-B77F558A4F46

Quality Counts

920 Blairhill Rd, Ste B-106
Charlotte, NC 28217

File Name : 15411719 - I-26 N of Long Shoals Rd
Site Code : 15411719
Start Date : 4/20/2021
Page No : 2

Groups Printed- Classes 1, 2, 3 - Classes 4, 5, 6, 7 - Classes 8, 9, 10 - Classes 11, 12, 13

	I-26 Southbound					Westbound					I-26 Northbound					Eastbound					
Start Time	Left	Thru	Right	U-Turn	App. Total	Left	Thru	Right	U-Turn	App. Total	Left	Thru	Right	U-Turn	App. Total	Left	Thru	Right	U-Turn	App. Total	Int. Total
03:45 PM	0	766	0	0	766	0	0	0	0	0	0	750	0	0	750	0	0	0	0	0	1516
Total	0	2648	0	0	2648	0	0	0	0	0	0	2884	0	0	2884	0	0	0	0	0	5532
04:00 PM	0	711	0	0	711	0	0	0	0	0	0	702	0	0	702	0	0	0	0	0	1413
04:15 PM	0	750	0	0	750	0	0	0	0	0	0	721	0	0	721	0	0	0	0	0	1471
04:30 PM	0	686	0	0	686	0	0	0	0	0	0	650	0	0	650	0	0	0	0	0	1336
04:45 PM	0	678	0	0	678	0	0	0	0	0	0	670	0	0	670	0	0	0	0	0	1348
Total	0	2825	0	0	2825	0	0	0	0	0	0	2743	0	0	2743	0	0	0	0	0	5568
05:00 PM	0	715	0	0	715	0	0	0	0	0	0	727	0	0	727	0	0	0	0	0	1442
05:15 PM	0	837	0	0	837	0	0	0	0	0	0	714	0	0	714	0	0	0	0	0	1551
05:30 PM	0	714	0	0	714	0	0	0	0	0	0	642	0	0	642	0	0	0	0	0	1356
05:45 PM	0	679	0	0	679	0	0	0	0	0	0	641	0	0	641	0	0	0	0	0	1320
Total	0	2945	0	0	2945	0	0	0	0	0	0	2724	0	0	2724	0	0	0	0	0	5669
06:00 PM	0	543	0	0	543	0	0	0	0	0	0	593	0	0	593	0	0	0	0	0	1136
06:15 PM	0	564	0	0	564	0	0	0	0	0	0	563	0	0	563	0	0	0	0	0	1127
06:30 PM	0	472	0	0	472	0	0	0	0	0	0	459	0	0	459	0	0	0	0	0	931
06:45 PM	0	412	0	0	412	0	0	0	0	0	0	434	0	0	434	0	0	0	0	0	846
Total	0	1991	0	0	1991	0	0	0	0	0	0	2049	0	0	2049	0	0	0	0	0	4040
07:00 PM	0	92	0	0	92	0	0	0	0	0	0	203	0	0	203	0	0	0	0	0	295
07:15 PM	0	271	0	0	271	0	0	0	0	0	0	398	0	0	398	0	0	0	0	0	669
07:30 PM	0	148	0	0	148	0	0	0	0	0	0	296	0	0	296	0	0	0	0	0	444
07:45 PM	0	254	0	0	254	0	0	0	0	0	0	321	0	0	321	0	0	0	0	0	575
Total	0	765	0	0	765	0	0	0	0	0	0	1218	0	0	1218	0	0	0	0	0	1983
Grand Total	0	32370	0	0	32370	0	0	0	0	0	0	32231	0	0	32231	0	0	0	0	0	64601
Apprch %	0	100	0	0		0	0	0	0		0	100	0	0		0	0	0	0		
Total %	0	50.1	0	0	50.1	0	0	0	0	0	0	49.9	0	0	49.9	0	0	0	0	0	
Classes 1, 2, 3	0	27975	0	0	27975	0	0	0	0	0	0	27609	0	0	27609	0	0	0	0	0	55584
% Classes 1, 2, 3	0	86.4	0	0	86.4	0	0	0	0	0	0	85.7	0	0	85.7	0	0	0	0	0	86
Classes 4, 5, 6, 7	0	1650	0	0	1650	0	0	0	0	0	0	1472	0	0	1472	0	0	0	0	0	3122
% Classes 4, 5, 6, 7	0	5.1	0	0	5.1	0	0	0	0	0	0	4.6	0	0	4.6	0	0	0	0	0	4.8
Classes 8, 9, 10	0	2682	0	0	2682	0	0	0	0	0	0	3110	0	0	3110	0	0	0	0	0	5792
% Classes 8, 9, 10	0	8.3	0	0	8.3	0	0	0	0	0	0	9.6	0	0	9.6	0	0	0	0	0	9
Classes 11, 12, 13	0	63	0	0	63	0	0	0	0	0	0	40	0	0	40	0	0	0	0	0	103
% Classes 11, 12, 13	0	0.2	0	0	0.2	0	0	0	0	0	0	0.1	0	0	0.1	0	0	0	0	0	0.2

DocuSign Envelope ID: 5C03745C-4B01-4834-A65D-B77F558A4F46

Quality Counts

920 Blairhill Rd, Ste B-106
Charlotte, NC 28217

File Name : 15411719 - I-26 N of Long Shoals Rd
Site Code : 15411719
Start Date : 4/20/2021
Page No : 3

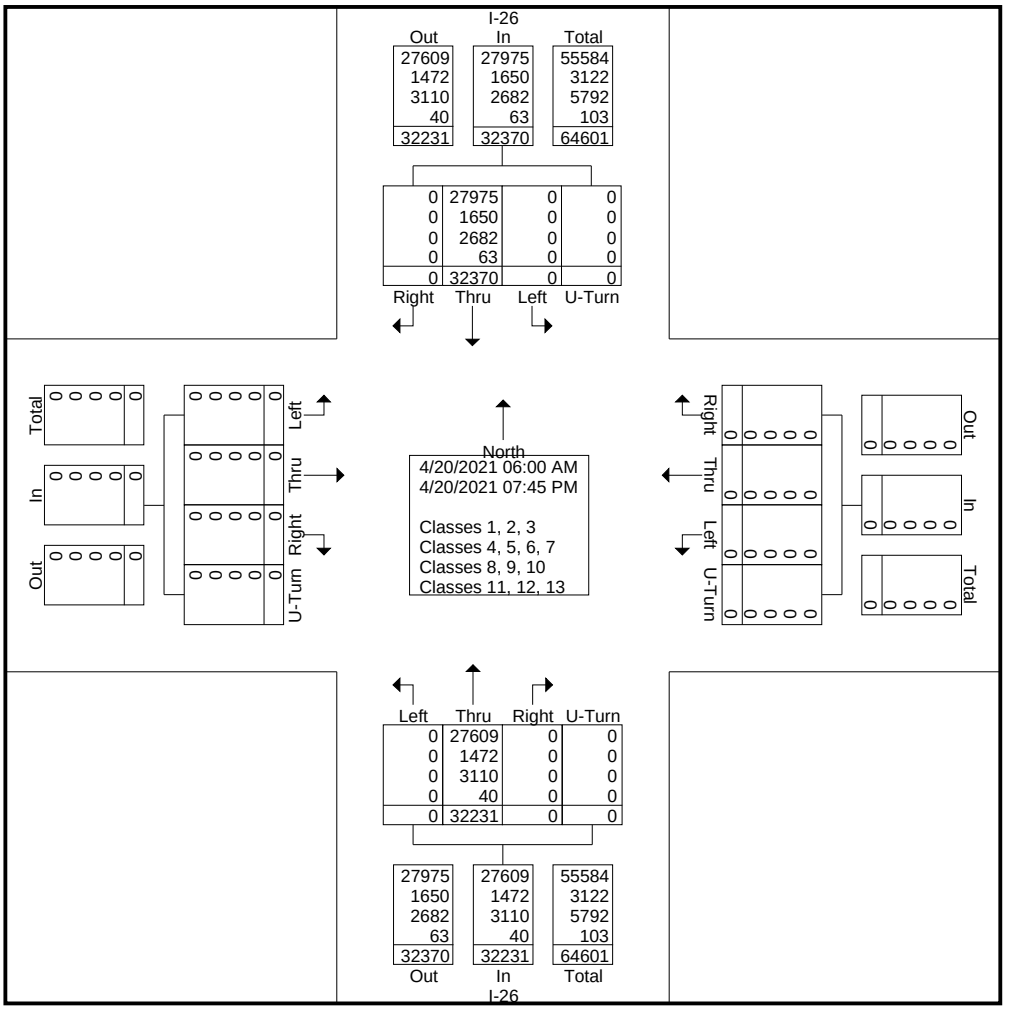

DocuSign Envelope ID: 5C03745C-4B01-4834-A65D-B77F558A4F46

Quality Counts

920 Blairhill Rd, Ste B-106
Charlotte, NC 28217

File Name : 15411719 - I-26 N of Long Shoals Rd
Site Code : 15411719
Start Date : 4/20/2021
Page No : 4

	I-26 Southbound					Westbound					I-26 Northbound					Eastbound					
Start Time	Left	Thru	Right	U-Turn	App. Total	Left	Thru	Right	U-Turn	App. Total	Left	Thru	Right	U-Turn	App. Total	Left	Thru	Right	U-Turn	App. Total	Int. Total
Peak Hour Analysis From 06:00 AM to 11:45 AM - Peak 1 of 1																					
Peak Hour for Entire Intersection Begins at 07:15 AM																					
07:15 AM	0	667	0	0	667	0	0	0	0	0	0	669	0	0	669	0	0	0	0	0	1336
07:30 AM	0	795	0	0	795	0	0	0	0	0	0	721	0	0	721	0	0	0	0	0	1516
07:45 AM	0	**819**	0	0	**819**	0	0	0	0	0	0	**775**	0	0	**775**	0	0	0	0	0	**1594**
08:00 AM	0	668	0	0	668	0	0	0	0	0	0	705	0	0	705	0	0	0	0	0	1373
Total Volume	0	2949	0	0	2949	0	0	0	0	0	0	2870	0	0	2870	0	0	0	0	0	5819
% App. Total	0	100	0	0		0	0	0	0		0	100	0	0		0	0	0	0		
PHF	.000	.900	.000	.000	.900	.000	.000	.000	.000	.000	.000	.926	.000	.000	.926	.000	.000	.000	.000	.000	.913

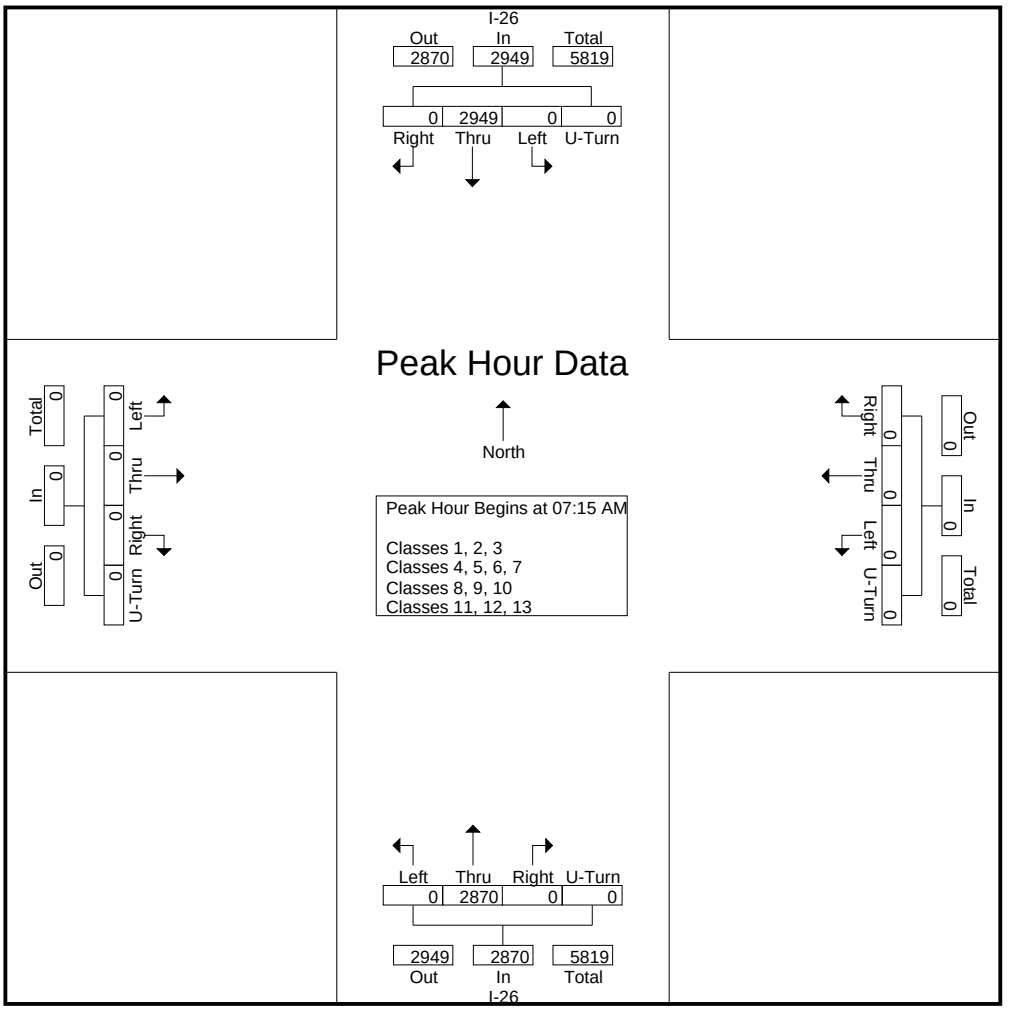

DocuSign Envelope ID: 5C03745C-4B01-4834-A65D-B77F558A4F46

Quality Counts

920 Blairhill Rd, Ste B-106
Charlotte, NC 28217

File Name : 15411719 - I-26 N of Long Shoals Rd
Site Code : 15411719
Start Date : 4/20/2021
Page No : 5

	I-26 Southbound					Westbound					I-26 Northbound					Eastbound					
Start Time	Left	Thru	Right	U-Turn	App. Total	Left	Thru	Right	U-Turn	App. Total	Left	Thru	Right	U-Turn	App. Total	Left	Thru	Right	U-Turn	App. Total	Int. Total
Peak Hour Analysis From 12:00 PM to 07:45 PM - Peak 1 of 1																					
Peak Hour for Entire Intersection Begins at 03:45 PM																					
03:45 PM	0	**766**	0	0	**766**	0	0	0	0	0	0	**750**	0	0	**750**	0	0	0	0	0	**1516**
04:00 PM	0	711	0	0	711	0	0	0	0	0	0	702	0	0	702	0	0	0	0	0	1413
04:15 PM	0	750	0	0	750	0	0	0	0	0	0	721	0	0	721	0	0	0	0	0	1471
04:30 PM	0	686	0	0	686	0	0	0	0	0	0	650	0	0	650	0	0	0	0	0	1336
Total Volume	0	2913	0	0	2913	0	0	0	0	0	0	2823	0	0	2823	0	0	0	0	0	5736
% App. Total	0	100	0	0		0	0	0	0		0	100	0	0		0	0	0	0		
PHF	.000	.951	.000	.000	.951	.000	.000	.000	.000	.000	.000	.941	.000	.000	.941	.000	.000	.000	.000	.000	.946

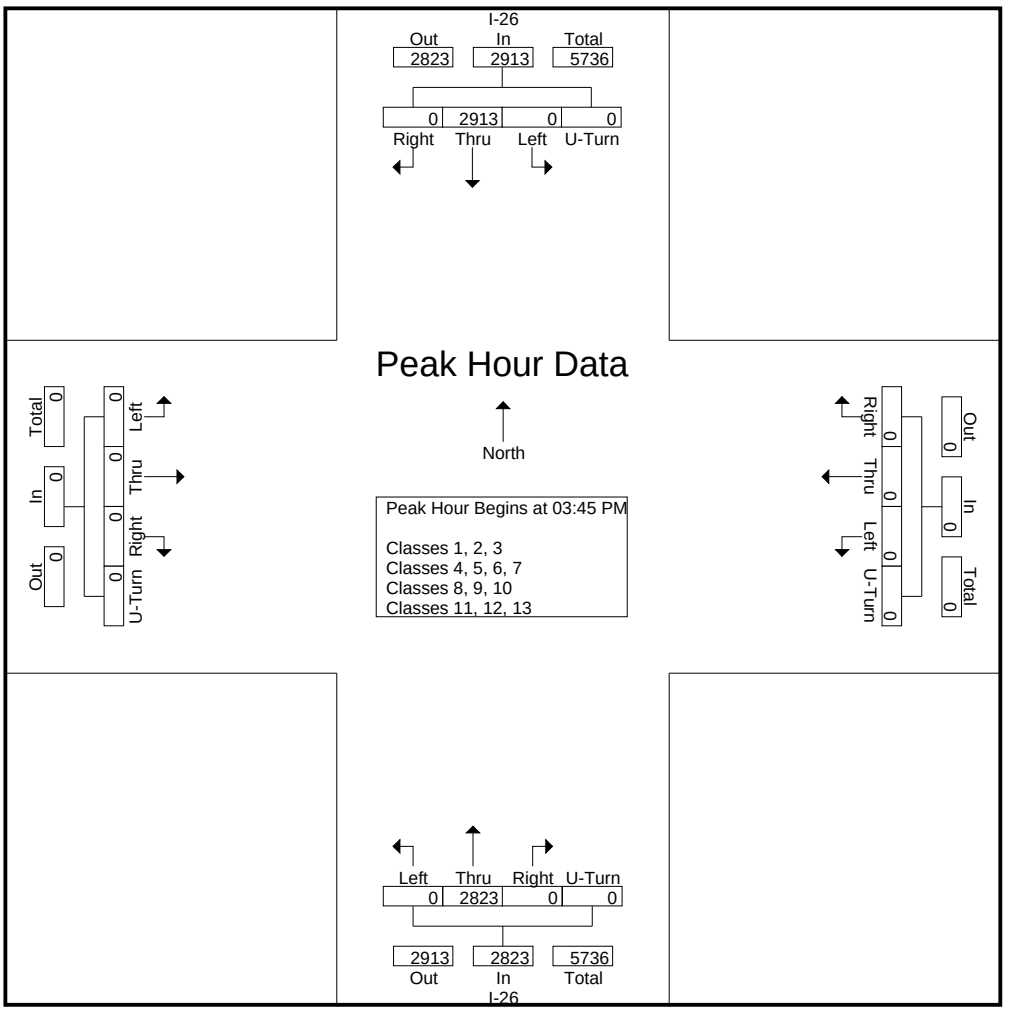

DocuSign Envelope ID: 5C03745C-4B01-4834-A65D-B77F558A4F46

Quality Counts

920 Blairhill Rd, Ste B-106
Charlotte, NC 28217

File Name : 15411719 - I-26 N of Long Shoals Rd
Site Code : 15411719
Start Date : 4/20/2021
Page No : 1

Groups Printed- Classes 1, 2, 3

	I-26 Southbound					Westbound					I-26 Northbound					Eastbound					
Start Time	Left	Thru	Right	U-Turn	App. Total	Left	Thru	Right	U-Turn	App. Total	Left	Thru	Right	U-Turn	App. Total	Left	Thru	Right	U-Turn	App. Total	Int. Total
06:00 AM	0	214	0	0	214	0	0	0	0	0	0	190	0	0	190	0	0	0	0	0	404
06:15 AM	0	348	0	0	348	0	0	0	0	0	0	262	0	0	262	0	0	0	0	0	610
06:30 AM	0	465	0	0	465	0	0	0	0	0	0	339	0	0	339	0	0	0	0	0	804
06:45 AM	0	491	0	0	491	0	0	0	0	0	0	399	0	0	399	0	0	0	0	0	890
Total	0	1518	0	0	1518	0	0	0	0	0	0	1190	0	0	1190	0	0	0	0	0	2708
07:00 AM	0	439	0	0	439	0	0	0	0	0	0	466	0	0	466	0	0	0	0	0	905
07:15 AM	0	597	0	0	597	0	0	0	0	0	0	612	0	0	612	0	0	0	0	0	1209
07:30 AM	0	724	0	0	724	0	0	0	0	0	0	643	0	0	643	0	0	0	0	0	1367
07:45 AM	0	738	0	0	738	0	0	0	0	0	0	684	0	0	684	0	0	0	0	0	1422
Total	0	2498	0	0	2498	0	0	0	0	0	0	2405	0	0	2405	0	0	0	0	0	4903
08:00 AM	0	578	0	0	578	0	0	0	0	0	0	618	0	0	618	0	0	0	0	0	1196
08:15 AM	0	572	0	0	572	0	0	0	0	0	0	555	0	0	555	0	0	0	0	0	1127
08:30 AM	0	548	0	0	548	0	0	0	0	0	0	537	0	0	537	0	0	0	0	0	1085
08:45 AM	0	579	0	0	579	0	0	0	0	0	0	483	0	0	483	0	0	0	0	0	1062
Total	0	2277	0	0	2277	0	0	0	0	0	0	2193	0	0	2193	0	0	0	0	0	4470
09:00 AM	0	481	0	0	481	0	0	0	0	0	0	475	0	0	475	0	0	0	0	0	956
09:15 AM	0	476	0	0	476	0	0	0	0	0	0	440	0	0	440	0	0	0	0	0	916
09:30 AM	0	489	0	0	489	0	0	0	0	0	0	448	0	0	448	0	0	0	0	0	937
09:45 AM	0	511	0	0	511	0	0	0	0	0	0	436	0	0	436	0	0	0	0	0	947
Total	0	1957	0	0	1957	0	0	0	0	0	0	1799	0	0	1799	0	0	0	0	0	3756
10:00 AM	0	430	0	0	430	0	0	0	0	0	0	426	0	0	426	0	0	0	0	0	856
10:15 AM	0	451	0	0	451	0	0	0	0	0	0	493	0	0	493	0	0	0	0	0	944
10:30 AM	0	476	0	0	476	0	0	0	0	0	0	501	0	0	501	0	0	0	0	0	977
10:45 AM	0	455	0	0	455	0	0	0	0	0	0	503	0	0	503	0	0	0	0	0	958
Total	0	1812	0	0	1812	0	0	0	0	0	0	1923	0	0	1923	0	0	0	0	0	3735
11:00 AM	0	500	0	0	500	0	0	0	0	0	0	469	0	0	469	0	0	0	0	0	969
11:15 AM	0	458	0	0	458	0	0	0	0	0	0	494	0	0	494	0	0	0	0	0	952
11:30 AM	0	485	0	0	485	0	0	0	0	0	0	482	0	0	482	0	0	0	0	0	967
11:45 AM	0	486	0	0	486	0	0	0	0	0	0	472	0	0	472	0	0	0	0	0	958
Total	0	1929	0	0	1929	0	0	0	0	0	0	1917	0	0	1917	0	0	0	0	0	3846
12:00 PM	0	481	0	0	481	0	0	0	0	0	0	458	0	0	458	0	0	0	0	0	939
12:15 PM	0	584	0	0	584	0	0	0	0	0	0	472	0	0	472	0	0	0	0	0	1056
12:30 PM	0	500	0	0	500	0	0	0	0	0	0	467	0	0	467	0	0	0	0	0	967
12:45 PM	0	470	0	0	470	0	0	0	0	0	0	482	0	0	482	0	0	0	0	0	952
Total	0	2035	0	0	2035	0	0	0	0	0	0	1879	0	0	1879	0	0	0	0	0	3914
01:00 PM	0	497	0	0	497	0	0	0	0	0	0	465	0	0	465	0	0	0	0	0	962
01:15 PM	0	503	0	0	503	0	0	0	0	0	0	493	0	0	493	0	0	0	0	0	996
01:30 PM	0	521	0	0	521	0	0	0	0	0	0	526	0	0	526	0	0	0	0	0	1047
01:45 PM	0	498	0	0	498	0	0	0	0	0	0	506	0	0	506	0	0	0	0	0	1004
Total	0	2019	0	0	2019	0	0	0	0	0	0	1990	0	0	1990	0	0	0	0	0	4009
02:00 PM	0	518	0	0	518	0	0	0	0	0	0	502	0	0	502	0	0	0	0	0	1020
02:15 PM	0	591	0	0	591	0	0	0	0	0	0	561	0	0	561	0	0	0	0	0	1152
02:30 PM	0	521	0	0	521	0	0	0	0	0	0	554	0	0	554	0	0	0	0	0	1075
02:45 PM	0	576	0	0	576	0	0	0	0	0	0	549	0	0	549	0	0	0	0	0	1125
Total	0	2206	0	0	2206	0	0	0	0	0	0	2166	0	0	2166	0	0	0	0	0	4372
03:00 PM	0	540	0	0	540	0	0	0	0	0	0	597	0	0	597	0	0	0	0	0	1137
03:15 PM	0	587	0	0	587	0	0	0	0	0	0	608	0	0	608	0	0	0	0	0	1195
03:30 PM	0	479	0	0	479	0	0	0	0	0	0	638	0	0	638	0	0	0	0	0	1117

DocuSign Envelope ID: 5C03745C-4B01-4834-A65D-B77F558A4F46

Quality Counts

920 Blairhill Rd, Ste B-106
Charlotte, NC 28217

File Name : 15411719 - I-26 N of Long Shoals Rd
Site Code : 15411719
Start Date : 4/20/2021
Page No : 2

Groups Printed- Classes 1, 2, 3

	I-26 Southbound					Westbound					I-26 Northbound					Eastbound					
Start Time	Left	Thru	Right	U-Turn	App. Total	Left	Thru	Right	U-Turn	App. Total	Left	Thru	Right	U-Turn	App. Total	Left	Thru	Right	U-Turn	App. Total	Int. Total
03:45 PM	0	684	0	0	684	0	0	0	0	0	0	651	0	0	651	0	0	0	0	0	1335
Total	0	2290	0	0	2290	0	0	0	0	0	0	2494	0	0	2494	0	0	0	0	0	4784
04:00 PM	0	607	0	0	607	0	0	0	0	0	0	616	0	0	616	0	0	0	0	0	1223
04:15 PM	0	666	0	0	666	0	0	0	0	0	0	622	0	0	622	0	0	0	0	0	1288
04:30 PM	0	590	0	0	590	0	0	0	0	0	0	561	0	0	561	0	0	0	0	0	1151
04:45 PM	0	602	0	0	602	0	0	0	0	0	0	581	0	0	581	0	0	0	0	0	1183
Total	0	2465	0	0	2465	0	0	0	0	0	0	2380	0	0	2380	0	0	0	0	0	4845
05:00 PM	0	640	0	0	640	0	0	0	0	0	0	631	0	0	631	0	0	0	0	0	1271
05:15 PM	0	759	0	0	759	0	0	0	0	0	0	642	0	0	642	0	0	0	0	0	1401
05:30 PM	0	636	0	0	636	0	0	0	0	0	0	562	0	0	562	0	0	0	0	0	1198
05:45 PM	0	597	0	0	597	0	0	0	0	0	0	565	0	0	565	0	0	0	0	0	1162
Total	0	2632	0	0	2632	0	0	0	0	0	0	2400	0	0	2400	0	0	0	0	0	5032
06:00 PM	0	477	0	0	477	0	0	0	0	0	0	521	0	0	521	0	0	0	0	0	998
06:15 PM	0	486	0	0	486	0	0	0	0	0	0	501	0	0	501	0	0	0	0	0	987
06:30 PM	0	397	0	0	397	0	0	0	0	0	0	396	0	0	396	0	0	0	0	0	793
06:45 PM	0	352	0	0	352	0	0	0	0	0	0	393	0	0	393	0	0	0	0	0	745
Total	0	1712	0	0	1712	0	0	0	0	0	0	1811	0	0	1811	0	0	0	0	0	3523
07:00 PM	0	75	0	0	75	0	0	0	0	0	0	198	0	0	198	0	0	0	0	0	273
07:15 PM	0	236	0	0	236	0	0	0	0	0	0	334	0	0	334	0	0	0	0	0	570
07:30 PM	0	104	0	0	104	0	0	0	0	0	0	258	0	0	258	0	0	0	0	0	362
07:45 PM	0	210	0	0	210	0	0	0	0	0	0	272	0	0	272	0	0	0	0	0	482
Total	0	625	0	0	625	0	0	0	0	0	0	1062	0	0	1062	0	0	0	0	0	1687
Grand Total	0	27975	0	0	27975	0	0	0	0	0	0	27609	0	0	27609	0	0	0	0	0	55584
Apprch %	0	100	0	0		0	0	0	0		0	100	0	0		0	0	0	0		
Total %	0	50.3	0	0	50.3	0	0	0	0	0	0	49.7	0	0	49.7	0	0	0	0	0	

DocuSign Envelope ID: 5C03745C-4B01-4834-A65D-B77F558A4F46

Quality Counts

920 Blairhill Rd, Ste B-106
Charlotte, NC 28217

File Name : 15411719 - I-26 N of Long Shoals Rd
Site Code : 15411719
Start Date : 4/20/2021
Page No : 3

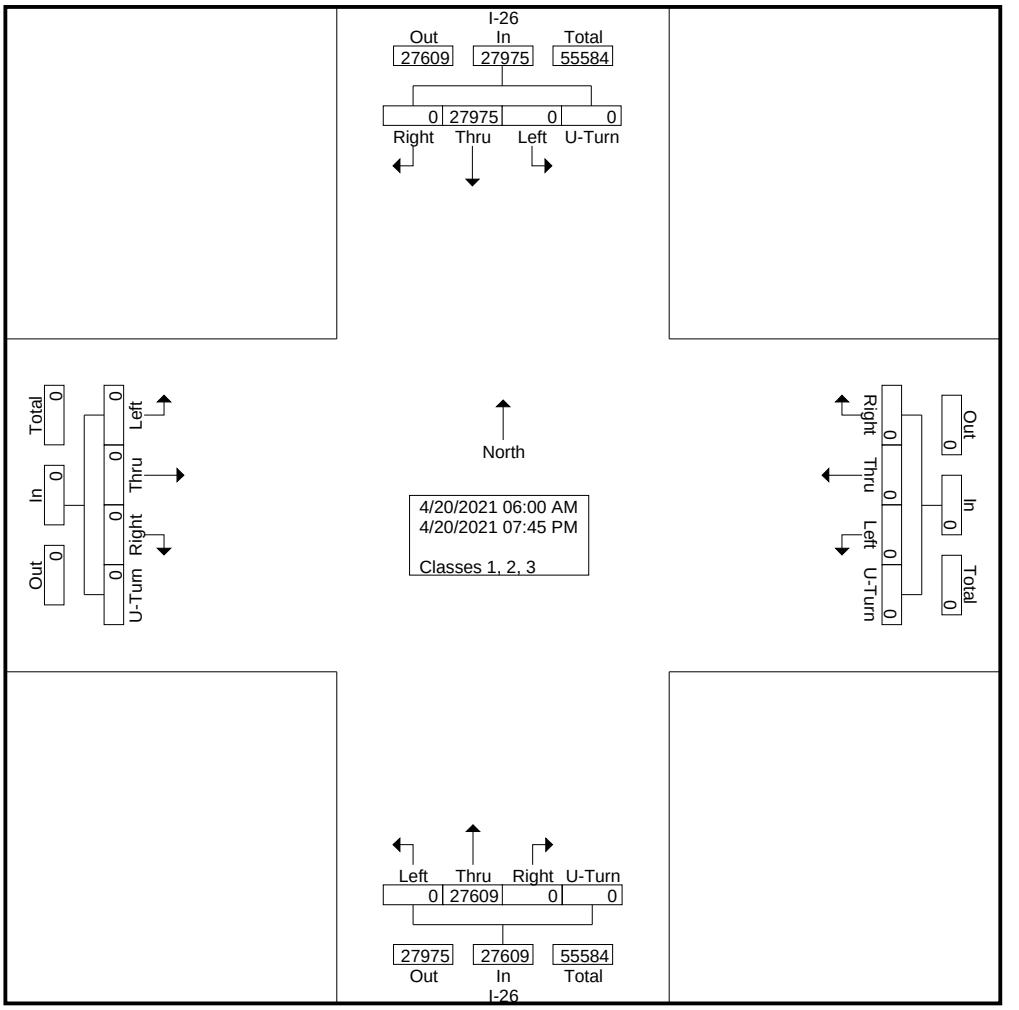

DocuSign Envelope ID: 5C03745C-4B01-4834-A65D-B77F558A4F46

Quality Counts

920 Blairhill Rd, Ste B-106
Charlotte, NC 28217

File Name : 15411719 - I-26 N of Long Shoals Rd
Site Code : 15411719
Start Date : 4/20/2021
Page No : 4

	I-26 Southbound					Westbound					I-26 Northbound					Eastbound					
Start Time	Left	Thru	Right	U-Turn	App. Total	Left	Thru	Right	U-Turn	App. Total	Left	Thru	Right	U-Turn	App. Total	Left	Thru	Right	U-Turn	App. Total	Int. Total
Peak Hour Analysis From 06:00 AM to 11:45 AM - Peak 1 of 1																					
Peak Hour for Entire Intersection Begins at 07:15 AM																					
07:15 AM	0	597	0	0	597	0	0	0	0	0	0	612	0	0	612	0	0	0	0	0	1209
07:30 AM	0	724	0	0	724	0	0	0	0	0	0	643	0	0	643	0	0	0	0	0	1367
07:45 AM	0	**738**	0	0	**738**	0	0	0	0	0	0	**684**	0	0	**684**	0	0	0	0	0	**1422**
08:00 AM	0	578	0	0	578	0	0	0	0	0	0	618	0	0	618	0	0	0	0	0	1196
Total Volume	0	2637	0	0	2637	0	0	0	0	0	0	2557	0	0	2557	0	0	0	0	0	5194
% App. Total	0	100	0	0		0	0	0	0		0	100	0	0		0	0	0	0		
PHF	.000	.893	.000	.000	.893	.000	.000	.000	.000	.000	.000	.935	.000	.000	.935	.000	.000	.000	.000	.000	.913

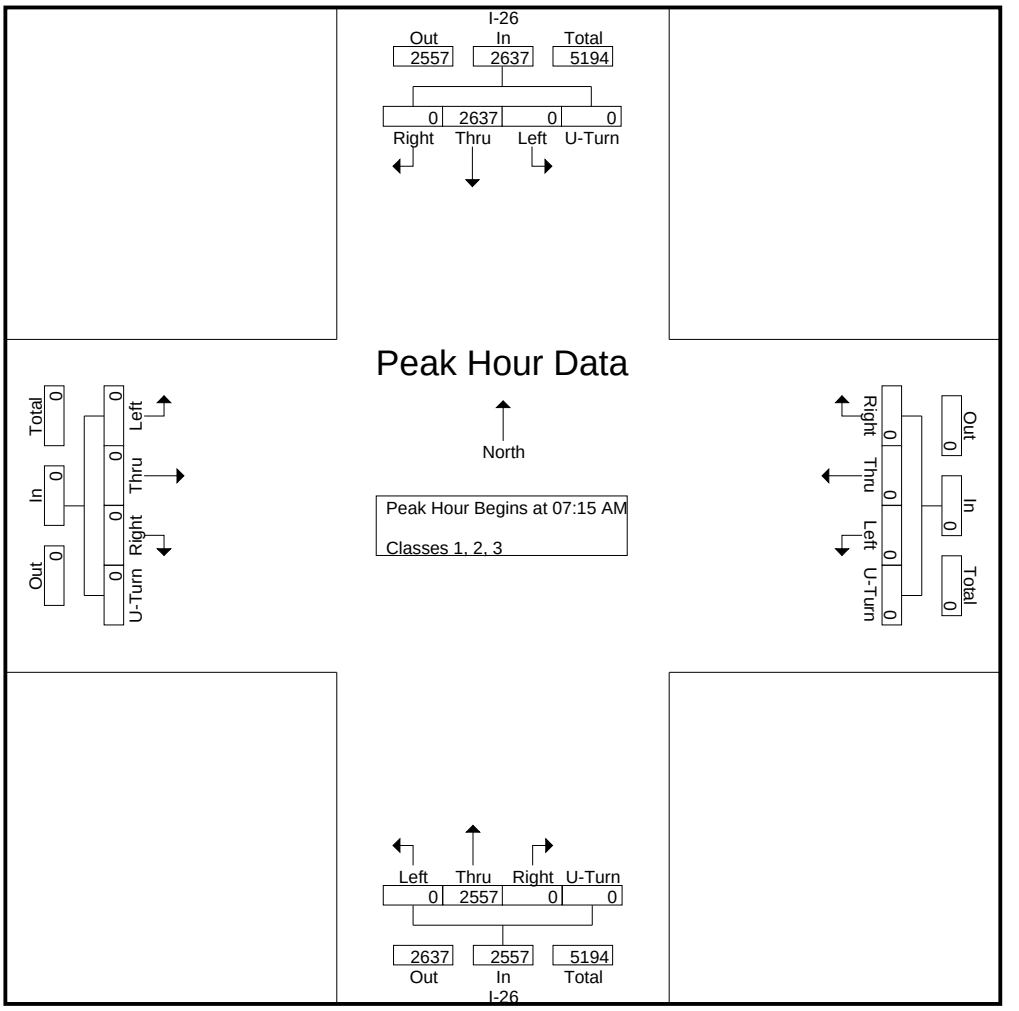

DocuSign Envelope ID: 5C03745C-4B01-4834-A65D-B77F558A4F46

Quality Counts

920 Blairhill Rd, Ste B-106
Charlotte, NC 28217

File Name : 15411719 - I-26 N of Long Shoals Rd
Site Code : 15411719
Start Date : 4/20/2021
Page No : 5

	I-26 Southbound					Westbound					I-26 Northbound					Eastbound					
Start Time	Left	Thru	Right	U-Turn	App. Total	Left	Thru	Right	U-Turn	App. Total	Left	Thru	Right	U-Turn	App. Total	Left	Thru	Right	U-Turn	App. Total	Int. Total
Peak Hour Analysis From 12:00 PM to 07:45 PM - Peak 1 of 1																					
Peak Hour for Entire Intersection Begins at 04:45 PM																					
04:45 PM	0	602	0	0	602	0	0	0	0	0	0	581	0	0	581	0	0	0	0	0	1183
05:00 PM	0	640	0	0	640	0	0	0	0	0	0	631	0	0	631	0	0	0	0	0	1271
05:15 PM	0	**759**	0	0	**759**	0	0	0	0	0	0	**642**	0	0	**642**	0	0	0	0	0	**1401**
05:30 PM	0	636	0	0	636	0	0	0	0	0	0	562	0	0	562	0	0	0	0	0	1198
Total Volume	0	2637	0	0	2637	0	0	0	0	0	0	2416	0	0	2416	0	0	0	0	0	5053
% App. Total	0	100	0	0		0	0	0	0		0	100	0	0		0	0	0	0		
PHF	.000	.869	.000	.000	.869	.000	.000	.000	.000	.000	.000	.941	.000	.000	.941	.000	.000	.000	.000	.000	.902

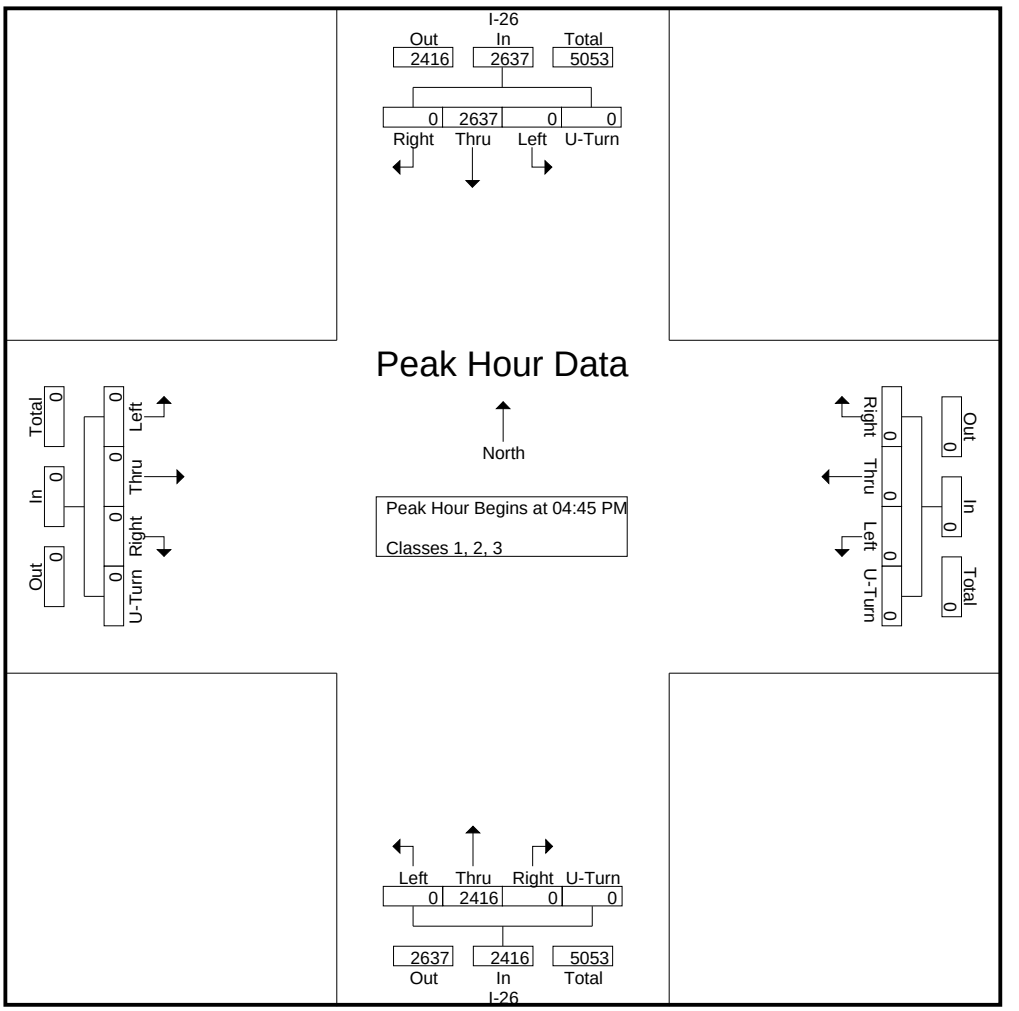

DocuSign Envelope ID: 5C03745C-4B01-4834-A65D-B77F558A4F46

Quality Counts

920 Blairhill Rd, Ste B-106
Charlotte, NC 28217

File Name : 15411719 - I-26 N of Long Shoals Rd
Site Code : 15411719
Start Date : 4/20/2021
Page No : 1

Groups Printed- Classes 4, 5, 6, 7

	I-26 Southbound					Westbound					I-26 Northbound					Eastbound					
Start Time	Left	Thru	Right	U-Turn	App. Total	Left	Thru	Right	U-Turn	App. Total	Left	Thru	Right	U-Turn	App. Total	Left	Thru	Right	U-Turn	App. Total	Int. Total
06:00 AM	0	11	0	0	11	0	0	0	0	0	0	8	0	0	8	0	0	0	0	0	19
06:15 AM	0	28	0	0	28	0	0	0	0	0	0	24	0	0	24	0	0	0	0	0	52
06:30 AM	0	26	0	0	26	0	0	0	0	0	0	21	0	0	21	0	0	0	0	0	47
06:45 AM	0	32	0	0	32	0	0	0	0	0	0	19	0	0	19	0	0	0	0	0	51
Total	0	97	0	0	97	0	0	0	0	0	0	72	0	0	72	0	0	0	0	0	169
07:00 AM	0	27	0	0	27	0	0	0	0	0	0	15	0	0	15	0	0	0	0	0	42
07:15 AM	0	33	0	0	33	0	0	0	0	0	0	21	0	0	21	0	0	0	0	0	54
07:30 AM	0	36	0	0	36	0	0	0	0	0	0	30	0	0	30	0	0	0	0	0	66
07:45 AM	0	41	0	0	41	0	0	0	0	0	0	32	0	0	32	0	0	0	0	0	73
Total	0	137	0	0	137	0	0	0	0	0	0	98	0	0	98	0	0	0	0	0	235
08:00 AM	0	30	0	0	30	0	0	0	0	0	0	38	0	0	38	0	0	0	0	0	68
08:15 AM	0	26	0	0	26	0	0	0	0	0	0	37	0	0	37	0	0	0	0	0	63
08:30 AM	0	31	0	0	31	0	0	0	0	0	0	33	0	0	33	0	0	0	0	0	64
08:45 AM	0	34	0	0	34	0	0	0	0	0	0	29	0	0	29	0	0	0	0	0	63
Total	0	121	0	0	121	0	0	0	0	0	0	137	0	0	137	0	0	0	0	0	258
09:00 AM	0	27	0	0	27	0	0	0	0	0	0	22	0	0	22	0	0	0	0	0	49
09:15 AM	0	23	0	0	23	0	0	0	0	0	0	32	0	0	32	0	0	0	0	0	55
09:30 AM	0	29	0	0	29	0	0	0	0	0	0	27	0	0	27	0	0	0	0	0	56
09:45 AM	0	31	0	0	31	0	0	0	0	0	0	31	0	0	31	0	0	0	0	0	62
Total	0	110	0	0	110	0	0	0	0	0	0	112	0	0	112	0	0	0	0	0	222
10:00 AM	0	26	0	0	26	0	0	0	0	0	0	23	0	0	23	0	0	0	0	0	49
10:15 AM	0	30	0	0	30	0	0	0	0	0	0	23	0	0	23	0	0	0	0	0	53
10:30 AM	0	29	0	0	29	0	0	0	0	0	0	25	0	0	25	0	0	0	0	0	54
10:45 AM	0	27	0	0	27	0	0	0	0	0	0	28	0	0	28	0	0	0	0	0	55
Total	0	112	0	0	112	0	0	0	0	0	0	99	0	0	99	0	0	0	0	0	211
11:00 AM	0	29	0	0	29	0	0	0	0	0	0	16	0	0	16	0	0	0	0	0	45
11:15 AM	0	32	0	0	32	0	0	0	0	0	0	31	0	0	31	0	0	0	0	0	63
11:30 AM	0	24	0	0	24	0	0	0	0	0	0	34	0	0	34	0	0	0	0	0	58
11:45 AM	0	26	0	0	26	0	0	0	0	0	0	31	0	0	31	0	0	0	0	0	57
Total	0	111	0	0	111	0	0	0	0	0	0	112	0	0	112	0	0	0	0	0	223
12:00 PM	0	27	0	0	27	0	0	0	0	0	0	37	0	0	37	0	0	0	0	0	64
12:15 PM	0	32	0	0	32	0	0	0	0	0	0	41	0	0	41	0	0	0	0	0	73
12:30 PM	0	32	0	0	32	0	0	0	0	0	0	29	0	0	29	0	0	0	0	0	61
12:45 PM	0	32	0	0	32	0	0	0	0	0	0	22	0	0	22	0	0	0	0	0	54
Total	0	123	0	0	123	0	0	0	0	0	0	129	0	0	129	0	0	0	0	0	252
01:00 PM	0	26	0	0	26	0	0	0	0	0	0	34	0	0	34	0	0	0	0	0	60
01:15 PM	0	34	0	0	34	0	0	0	0	0	0	29	0	0	29	0	0	0	0	0	63
01:30 PM	0	30	0	0	30	0	0	0	0	0	0	32	0	0	32	0	0	0	0	0	62
01:45 PM	0	33	0	0	33	0	0	0	0	0	0	39	0	0	39	0	0	0	0	0	72
Total	0	123	0	0	123	0	0	0	0	0	0	134	0	0	134	0	0	0	0	0	257
02:00 PM	0	40	0	0	40	0	0	0	0	0	0	36	0	0	36	0	0	0	0	0	76
02:15 PM	0	32	0	0	32	0	0	0	0	0	0	39	0	0	39	0	0	0	0	0	71
02:30 PM	0	38	0	0	38	0	0	0	0	0	0	31	0	0	31	0	0	0	0	0	69
02:45 PM	0	23	0	0	23	0	0	0	0	0	0	24	0	0	24	0	0	0	0	0	47
Total	0	133	0	0	133	0	0	0	0	0	0	130	0	0	130	0	0	0	0	0	263
03:00 PM	0	43	0	0	43	0	0	0	0	0	0	36	0	0	36	0	0	0	0	0	79
03:15 PM	0	35	0	0	35	0	0	0	0	0	0	32	0	0	32	0	0	0	0	0	67
03:30 PM	0	33	0	0	33	0	0	0	0	0	0	38	0	0	38	0	0	0	0	0	71

DocuSign Envelope ID: 5C03745C-4B01-4834-A65D-B77F558A4F46

Quality Counts

920 Blairhill Rd, Ste B-106
Charlotte, NC 28217

File Name : 15411719 - I-26 N of Long Shoals Rd
Site Code : 15411719
Start Date : 4/20/2021
Page No : 2

Groups Printed- Classes 4, 5, 6, 7

	I-26 Southbound					Westbound					I-26 Northbound					Eastbound					
Start Time	Left	Thru	Right	U-Turn	App. Total	Left	Thru	Right	U-Turn	App. Total	Left	Thru	Right	U-Turn	App. Total	Left	Thru	Right	U-Turn	App. Total	Int. Total
03:45 PM	0	37	0	0	37	0	0	0	0	0	0	38	0	0	38	0	0	0	0	0	75
Total	0	148	0	0	148	0	0	0	0	0	0	144	0	0	144	0	0	0	0	0	292
04:00 PM	0	45	0	0	45	0	0	0	0	0	0	41	0	0	41	0	0	0	0	0	86
04:15 PM	0	38	0	0	38	0	0	0	0	0	0	33	0	0	33	0	0	0	0	0	71
04:30 PM	0	38	0	0	38	0	0	0	0	0	0	28	0	0	28	0	0	0	0	0	66
04:45 PM	0	35	0	0	35	0	0	0	0	0	0	25	0	0	25	0	0	0	0	0	60
Total	0	156	0	0	156	0	0	0	0	0	0	127	0	0	127	0	0	0	0	0	283
05:00 PM	0	30	0	0	30	0	0	0	0	0	0	29	0	0	29	0	0	0	0	0	59
05:15 PM	0	33	0	0	33	0	0	0	0	0	0	21	0	0	21	0	0	0	0	0	54
05:30 PM	0	32	0	0	32	0	0	0	0	0	0	19	0	0	19	0	0	0	0	0	51
05:45 PM	0	31	0	0	31	0	0	0	0	0	0	19	0	0	19	0	0	0	0	0	50
Total	0	126	0	0	126	0	0	0	0	0	0	88	0	0	88	0	0	0	0	0	214
06:00 PM	0	24	0	0	24	0	0	0	0	0	0	16	0	0	16	0	0	0	0	0	40
06:15 PM	0	34	0	0	34	0	0	0	0	0	0	16	0	0	16	0	0	0	0	0	50
06:30 PM	0	26	0	0	26	0	0	0	0	0	0	10	0	0	10	0	0	0	0	0	36
06:45 PM	0	27	0	0	27	0	0	0	0	0	0	11	0	0	11	0	0	0	0	0	38
Total	0	111	0	0	111	0	0	0	0	0	0	53	0	0	53	0	0	0	0	0	164
07:00 PM	0	4	0	0	4	0	0	0	0	0	0	1	0	0	1	0	0	0	0	0	5
07:15 PM	0	8	0	0	8	0	0	0	0	0	0	14	0	0	14	0	0	0	0	0	22
07:30 PM	0	16	0	0	16	0	0	0	0	0	0	12	0	0	12	0	0	0	0	0	28
07:45 PM	0	14	0	0	14	0	0	0	0	0	0	10	0	0	10	0	0	0	0	0	24
Total	0	42	0	0	42	0	0	0	0	0	0	37	0	0	37	0	0	0	0	0	79
Grand Total	0	1650	0	0	1650	0	0	0	0	0	0	1472	0	0	1472	0	0	0	0	0	3122
Apprch %	0	100	0	0		0	0	0	0		0	100	0	0		0	0	0	0		
Total %	0	52.9	0	0	52.9	0	0	0	0	0	0	47.1	0	0	47.1	0	0	0	0	0	

DocuSign Envelope ID: 5C03745C-4B01-4834-A65D-B77F558A4F46

Quality Counts

920 Blairhill Rd, Ste B-106
Charlotte, NC 28217

File Name : 15411719 - I-26 N of Long Shoals Rd
Site Code : 15411719
Start Date : 4/20/2021
Page No : 3

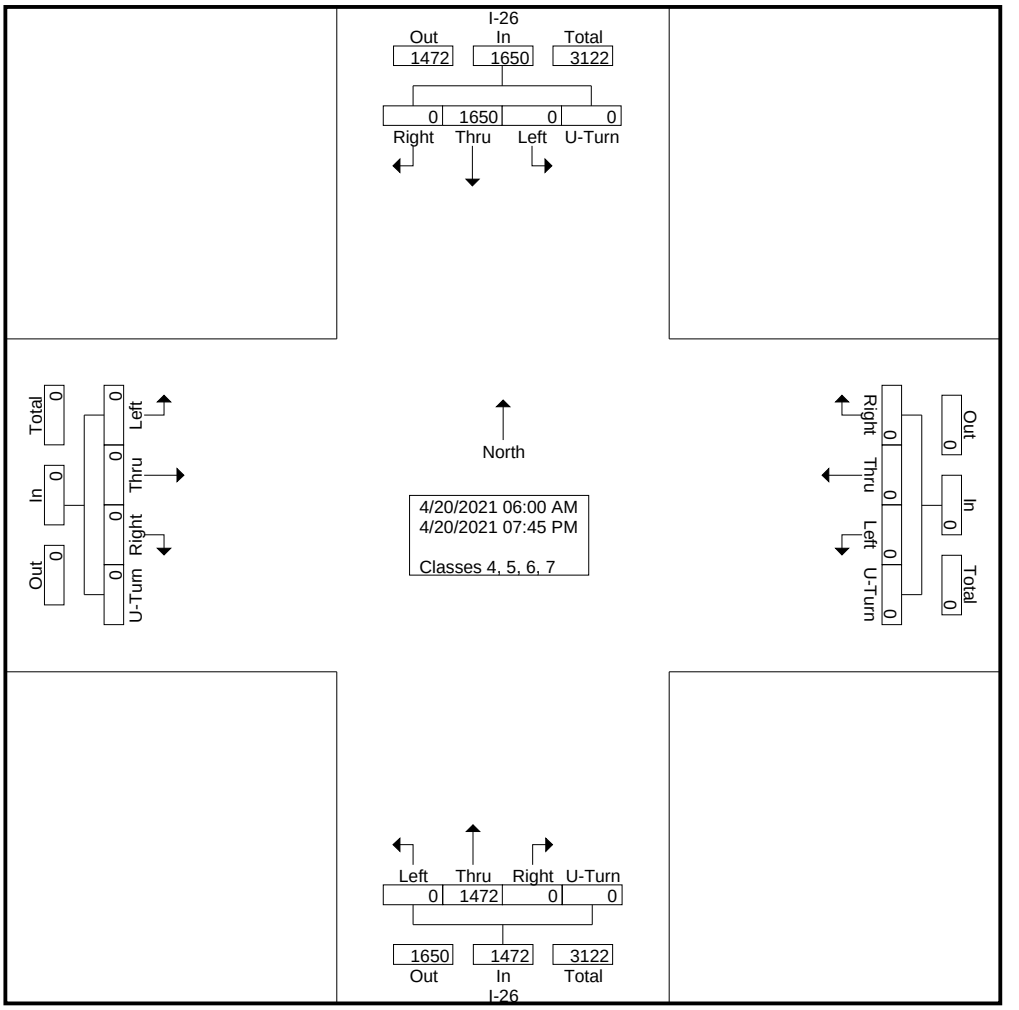

DocuSign Envelope ID: 5C03745C-4B01-4834-A65D-B77F558A4F46

Quality Counts

920 Blairhill Rd, Ste B-106
Charlotte, NC 28217

File Name : 15411719 - I-26 N of Long Shoals Rd
Site Code : 15411719
Start Date : 4/20/2021
Page No : 4

	I-26 Southbound					Westbound					I-26 Northbound					Eastbound					
Start Time	Left	Thru	Right	U-Turn	App. Total	Left	Thru	Right	U-Turn	App. Total	Left	Thru	Right	U-Turn	App. Total	Left	Thru	Right	U-Turn	App. Total	Int. Total
Peak Hour Analysis From 06:00 AM to 11:45 AM - Peak 1 of 1																					
Peak Hour for Entire Intersection Begins at 07:30 AM																					
07:30 AM	0	36	0	0	36	0	0	0	0	0	0	30	0	0	30	0	0	0	0	0	66
07:45 AM	0	**41**	0	0	**41**	0	0	0	0	0	0	32	0	0	32	0	0	0	0	0	**73**
08:00 AM	0	30	0	0	30	0	0	0	0	0	0	**38**	0	0	**38**	0	0	0	0	0	68
08:15 AM	0	26	0	0	26	0	0	0	0	0	0	37	0	0	37	0	0	0	0	0	63
Total Volume	0	133	0	0	133	0	0	0	0	0	0	137	0	0	137	0	0	0	0	0	270
% App. Total	0	100	0	0		0	0	0	0		0	100	0	0		0	0	0	0		
PHF	.000	.811	.000	.000	.811	.000	.000	.000	.000	.000	.000	.901	.000	.000	.901	.000	.000	.000	.000	.000	.925

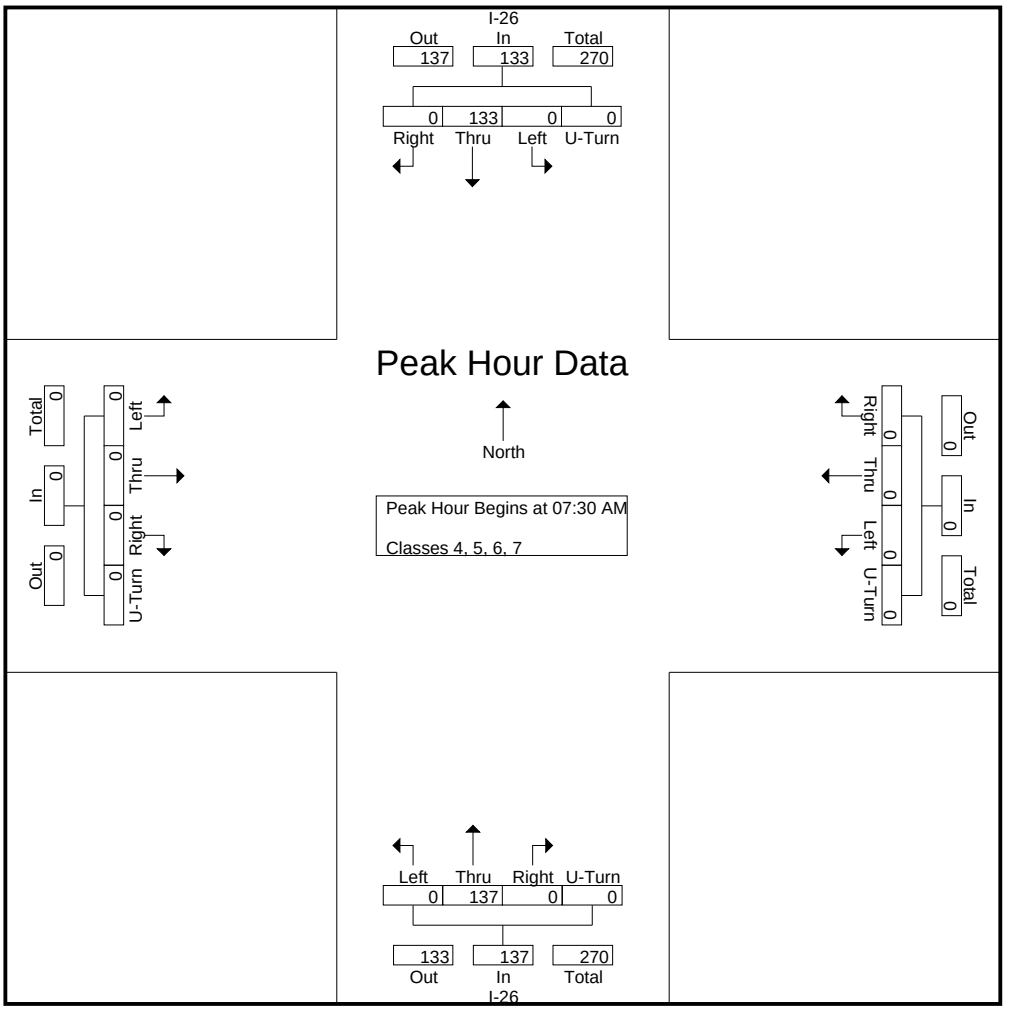

DocuSign Envelope ID: 5C03745C-4B01-4834-A65D-B77F558A4F46

Quality Counts

920 Blairhill Rd, Ste B-106
Charlotte, NC 28217

File Name : 15411719 - I-26 N of Long Shoals Rd
Site Code : 15411719
Start Date : 4/20/2021
Page No : 5

	I-26 Southbound					Westbound					I-26 Northbound					Eastbound					
Start Time	Left	Thru	Right	U-Turn	App. Total	Left	Thru	Right	U-Turn	App. Total	Left	Thru	Right	U-Turn	App. Total	Left	Thru	Right	U-Turn	App. Total	Int. Total
Peak Hour Analysis From 12:00 PM to 07:45 PM - Peak 1 of 1																					
Peak Hour for Entire Intersection Begins at 03:30 PM																					
03:30 PM	0	33	0	0	33	0	0	0	0	0	0	38	0	0	38	0	0	0	0	0	71
03:45 PM	0	37	0	0	37	0	0	0	0	0	0	38	0	0	38	0	0	0	0	0	75
04:00 PM	0	**45**	0	0	**45**	0	0	0	0	0	0	**41**	0	0	**41**	0	0	0	0	0	**86**
04:15 PM	0	38	0	0	38	0	0	0	0	0	0	33	0	0	33	0	0	0	0	0	71
Total Volume	0	153	0	0	153	0	0	0	0	0	0	150	0	0	150	0	0	0	0	0	303
% App. Total	0	100	0	0		0	0	0	0		0	100	0	0		0	0	0	0		
PHF	.000	.850	.000	.000	.850	.000	.000	.000	.000	.000	.000	.915	.000	.000	.915	.000	.000	.000	.000	.000	.881

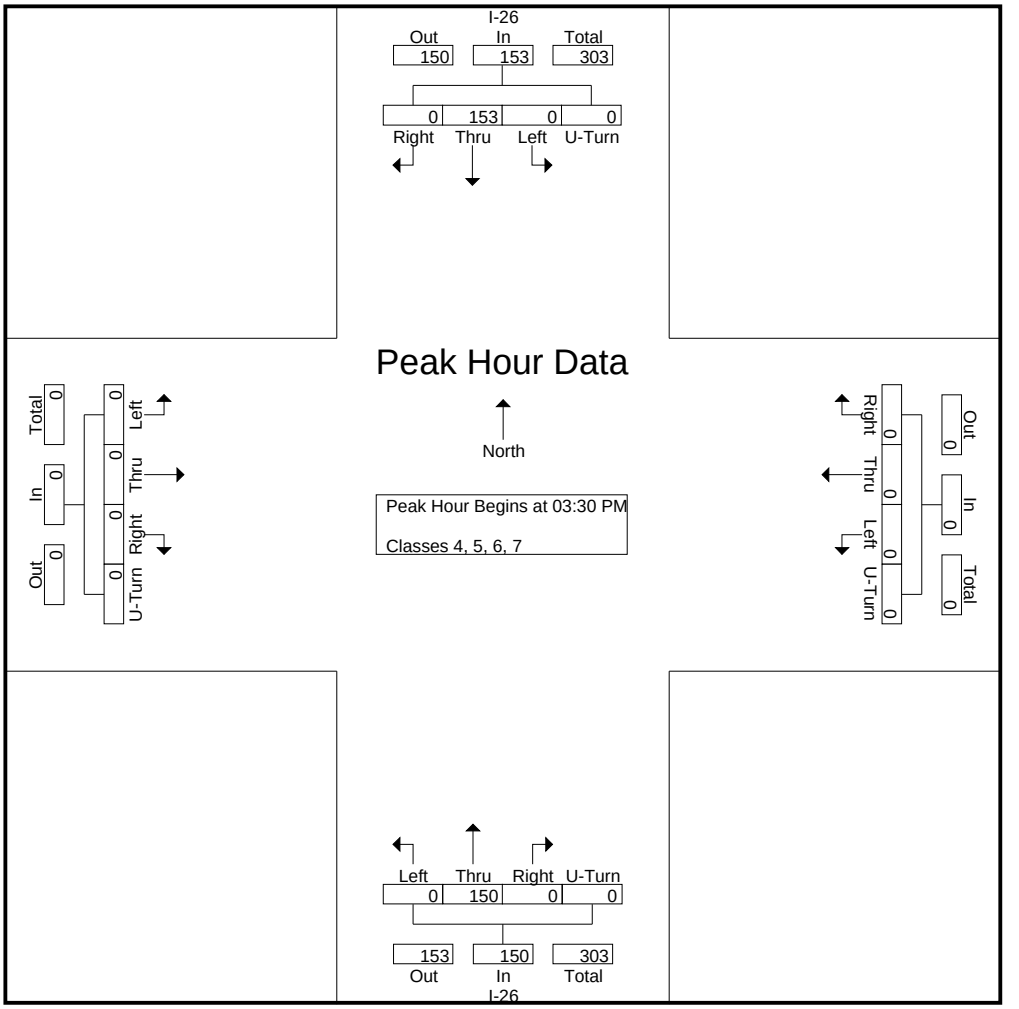

DocuSign Envelope ID: 5C03745C-4B01-4834-A65D-B77F558A4F46

Quality Counts

920 Blairhill Rd, Ste B-106
Charlotte, NC 28217

File Name : 15411719 - I-26 N of Long Shoals Rd
Site Code : 15411719
Start Date : 4/20/2021
Page No : 1

Groups Printed- Classes 8, 9, 10

	I-26 Southbound					Westbound					I-26 Northbound					Eastbound					
Start Time	Left	Thru	Right	U-Turn	App. Total	Left	Thru	Right	U-Turn	App. Total	Left	Thru	Right	U-Turn	App. Total	Left	Thru	Right	U-Turn	App. Total	Int. Total
06:00 AM	0	35	0	0	35	0	0	0	0	0	0	29	0	0	29	0	0	0	0	0	64
06:15 AM	0	37	0	0	37	0	0	0	0	0	0	33	0	0	33	0	0	0	0	0	70
06:30 AM	0	36	0	0	36	0	0	0	0	0	0	27	0	0	27	0	0	0	0	0	63
06:45 AM	0	37	0	0	37	0	0	0	0	0	0	63	0	0	63	0	0	0	0	0	100
Total	0	145	0	0	145	0	0	0	0	0	0	152	0	0	152	0	0	0	0	0	297
07:00 AM	0	41	0	0	41	0	0	0	0	0	0	38	0	0	38	0	0	0	0	0	79
07:15 AM	0	36	0	0	36	0	0	0	0	0	0	32	0	0	32	0	0	0	0	0	68
07:30 AM	0	35	0	0	35	0	0	0	0	0	0	45	0	0	45	0	0	0	0	0	80
07:45 AM	0	39	0	0	39	0	0	0	0	0	0	55	0	0	55	0	0	0	0	0	94
Total	0	151	0	0	151	0	0	0	0	0	0	170	0	0	170	0	0	0	0	0	321
08:00 AM	0	60	0	0	60	0	0	0	0	0	0	48	0	0	48	0	0	0	0	0	108
08:15 AM	0	54	0	0	54	0	0	0	0	0	0	47	0	0	47	0	0	0	0	0	101
08:30 AM	0	45	0	0	45	0	0	0	0	0	0	55	0	0	55	0	0	0	0	0	100
08:45 AM	0	53	0	0	53	0	0	0	0	0	0	47	0	0	47	0	0	0	0	0	100
Total	0	212	0	0	212	0	0	0	0	0	0	197	0	0	197	0	0	0	0	0	409
09:00 AM	0	71	0	0	71	0	0	0	0	0	0	58	0	0	58	0	0	0	0	0	129
09:15 AM	0	55	0	0	55	0	0	0	0	0	0	60	0	0	60	0	0	0	0	0	115
09:30 AM	0	55	0	0	55	0	0	0	0	0	0	71	0	0	71	0	0	0	0	0	126
09:45 AM	0	67	0	0	67	0	0	0	0	0	0	69	0	0	69	0	0	0	0	0	136
Total	0	248	0	0	248	0	0	0	0	0	0	258	0	0	258	0	0	0	0	0	506
10:00 AM	0	60	0	0	60	0	0	0	0	0	0	64	0	0	64	0	0	0	0	0	124
10:15 AM	0	47	0	0	47	0	0	0	0	0	0	56	0	0	56	0	0	0	0	0	103
10:30 AM	0	71	0	0	71	0	0	0	0	0	0	50	0	0	50	0	0	0	0	0	121
10:45 AM	0	51	0	0	51	0	0	0	0	0	0	59	0	0	59	0	0	0	0	0	110
Total	0	229	0	0	229	0	0	0	0	0	0	229	0	0	229	0	0	0	0	0	458
11:00 AM	0	58	0	0	58	0	0	0	0	0	0	66	0	0	66	0	0	0	0	0	124
11:15 AM	0	59	0	0	59	0	0	0	0	0	0	57	0	0	57	0	0	0	0	0	116
11:30 AM	0	56	0	0	56	0	0	0	0	0	0	58	0	0	58	0	0	0	0	0	114
11:45 AM	0	49	0	0	49	0	0	0	0	0	0	76	0	0	76	0	0	0	0	0	125
Total	0	222	0	0	222	0	0	0	0	0	0	257	0	0	257	0	0	0	0	0	479
12:00 PM	0	59	0	0	59	0	0	0	0	0	0	69	0	0	69	0	0	0	0	0	128
12:15 PM	0	50	0	0	50	0	0	0	0	0	0	67	0	0	67	0	0	0	0	0	117
12:30 PM	0	64	0	0	64	0	0	0	0	0	0	62	0	0	62	0	0	0	0	0	126
12:45 PM	0	61	0	0	61	0	0	0	0	0	0	67	0	0	67	0	0	0	0	0	128
Total	0	234	0	0	234	0	0	0	0	0	0	265	0	0	265	0	0	0	0	0	499
01:00 PM	0	52	0	0	52	0	0	0	0	0	0	72	0	0	72	0	0	0	0	0	124
01:15 PM	0	55	0	0	55	0	0	0	0	0	0	70	0	0	70	0	0	0	0	0	125
01:30 PM	0	54	0	0	54	0	0	0	0	0	0	56	0	0	56	0	0	0	0	0	110
01:45 PM	0	51	0	0	51	0	0	0	0	0	0	84	0	0	84	0	0	0	0	0	135
Total	0	212	0	0	212	0	0	0	0	0	0	282	0	0	282	0	0	0	0	0	494
02:00 PM	0	62	0	0	62	0	0	0	0	0	0	65	0	0	65	0	0	0	0	0	127
02:15 PM	0	50	0	0	50	0	0	0	0	0	0	66	0	0	66	0	0	0	0	0	116
02:30 PM	0	53	0	0	53	0	0	0	0	0	0	86	0	0	86	0	0	0	0	0	139
02:45 PM	0	38	0	0	38	0	0	0	0	0	0	65	0	0	65	0	0	0	0	0	103
Total	0	203	0	0	203	0	0	0	0	0	0	282	0	0	282	0	0	0	0	0	485
03:00 PM	0	53	0	0	53	0	0	0	0	0	0	48	0	0	48	0	0	0	0	0	101
03:15 PM	0	56	0	0	56	0	0	0	0	0	0	63	0	0	63	0	0	0	0	0	119
03:30 PM	0	48	0	0	48	0	0	0	0	0	0	73	0	0	73	0	0	0	0	0	121

DocuSign Envelope ID: 5C03745C-4B01-4834-A65D-B77F558A4F46

Quality Counts

920 Blairhill Rd, Ste B-106
Charlotte, NC 28217

File Name : 15411719 - I-26 N of Long Shoals Rd
Site Code : 15411719
Start Date : 4/20/2021

Groups Printed- Classes 8, 9, 10

	I-26 Southbound					Westbound					I-26 Northbound					Eastbound					
Start Time	Left	Thru	Right	U-Turn	App. Total	Left	Thru	Right	U-Turn	App. Total	Left	Thru	Right	U-Turn	App. Total	Left	Thru	Right	U-Turn	App. Total	Int. Total
03:45 PM	0	45	0	0	45	0	0	0	0	0	0	61	0	0	61	0	0	0	0	0	106
Total	0	202	0	0	202	0	0	0	0	0	0	245	0	0	245	0	0	0	0	0	447
04:00 PM	0	57	0	0	57	0	0	0	0	0	0	45	0	0	45	0	0	0	0	0	102
04:15 PM	0	45	0	0	45	0	0	0	0	0	0	66	0	0	66	0	0	0	0	0	111
04:30 PM	0	55	0	0	55	0	0	0	0	0	0	61	0	0	61	0	0	0	0	0	116
04:45 PM	0	39	0	0	39	0	0	0	0	0	0	64	0	0	64	0	0	0	0	0	103
Total	0	196	0	0	196	0	0	0	0	0	0	236	0	0	236	0	0	0	0	0	432
05:00 PM	0	44	0	0	44	0	0	0	0	0	0	67	0	0	67	0	0	0	0	0	111
05:15 PM	0	42	0	0	42	0	0	0	0	0	0	51	0	0	51	0	0	0	0	0	93
05:30 PM	0	43	0	0	43	0	0	0	0	0	0	61	0	0	61	0	0	0	0	0	104
05:45 PM	0	45	0	0	45	0	0	0	0	0	0	57	0	0	57	0	0	0	0	0	102
Total	0	174	0	0	174	0	0	0	0	0	0	236	0	0	236	0	0	0	0	0	410
06:00 PM	0	37	0	0	37	0	0	0	0	0	0	55	0	0	55	0	0	0	0	0	92
06:15 PM	0	43	0	0	43	0	0	0	0	0	0	46	0	0	46	0	0	0	0	0	89
06:30 PM	0	46	0	0	46	0	0	0	0	0	0	53	0	0	53	0	0	0	0	0	99
06:45 PM	0	31	0	0	31	0	0	0	0	0	0	30	0	0	30	0	0	0	0	0	61
Total	0	157	0	0	157	0	0	0	0	0	0	184	0	0	184	0	0	0	0	0	341
07:00 PM	0	12	0	0	12	0	0	0	0	0	0	4	0	0	4	0	0	0	0	0	16
07:15 PM	0	27	0	0	27	0	0	0	0	0	0	49	0	0	49	0	0	0	0	0	76
07:30 PM	0	28	0	0	28	0	0	0	0	0	0	26	0	0	26	0	0	0	0	0	54
07:45 PM	0	30	0	0	30	0	0	0	0	0	0	38	0	0	38	0	0	0	0	0	68
Total	0	97	0	0	97	0	0	0	0	0	0	117	0	0	117	0	0	0	0	0	214
Grand Total	0	2682	0	0	2682	0	0	0	0	0	0	3110	0	0	3110	0	0	0	0	0	5792
Apprch %	0	100	0	0		0	0	0	0		0	100	0	0		0	0	0	0		
Total %	0	46.3	0	0	46.3	0	0	0	0	0	0	53.7	0	0	53.7	0	0	0	0	0	

DocuSign Envelope ID: 5C03745C-4B01-4834-A65D-B77F558A4F46

Quality Counts

920 Blairhill Rd, Ste B-106
Charlotte, NC 28217

File Name : 15411719 - I-26 N of Long Shoals Rd
Site Code : 15411719
Start Date : 4/20/2021
Page No : 3

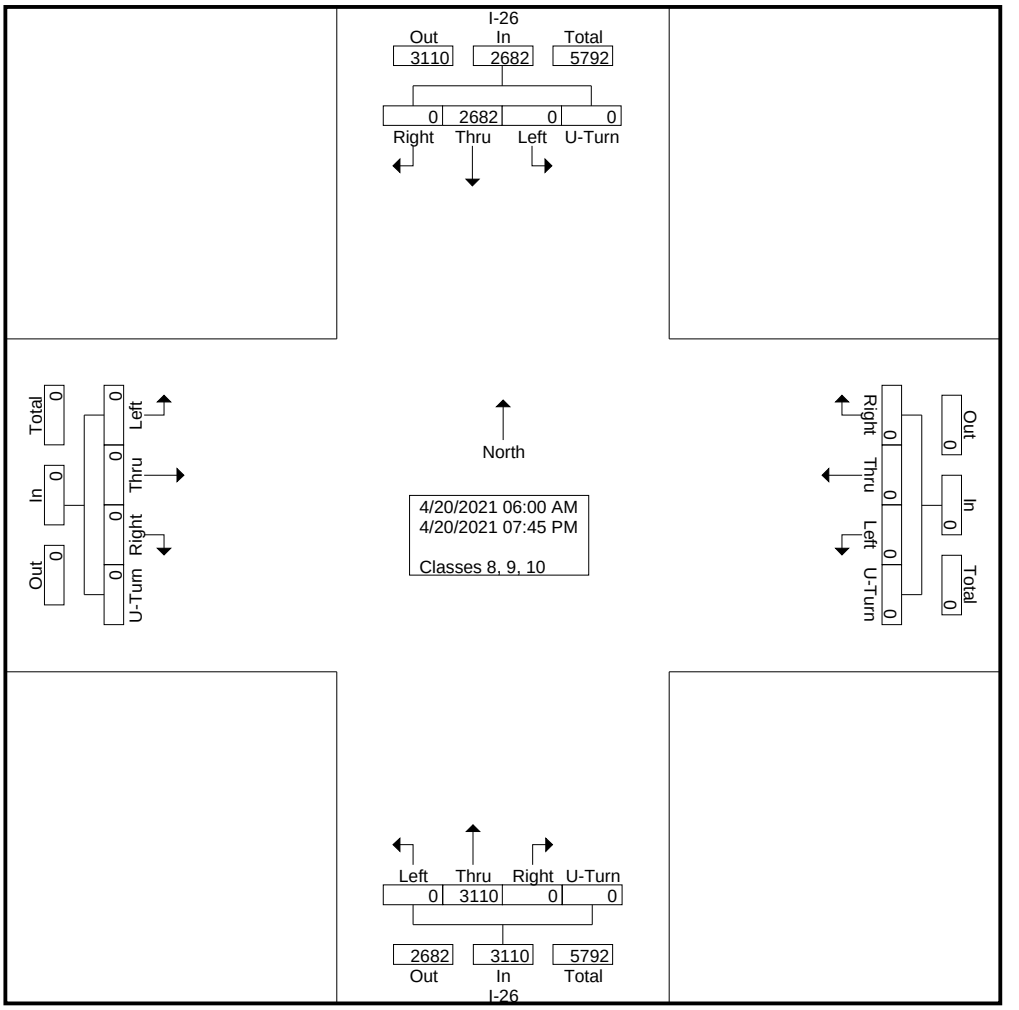

DocuSign Envelope ID: 5C03745C-4B01-4834-A65D-B77F558A4F46

Quality Counts

920 Blairhill Rd, Ste B-106
Charlotte, NC 28217

File Name : 15411719 - I-26 N of Long Shoals Rd
Site Code : 15411719
Start Date : 4/20/2021
Page No : 4

	I-26 Southbound					Westbound					I-26 Northbound					Eastbound					
Start Time	Left	Thru	Right	U-Turn	App. Total	Left	Thru	Right	U-Turn	App. Total	Left	Thru	Right	U-Turn	App. Total	Left	Thru	Right	U-Turn	App. Total	Int. Total
Peak Hour Analysis From 06:00 AM to 11:45 AM - Peak 1 of 1																					
Peak Hour for Entire Intersection Begins at 09:00 AM																					
09:00 AM	0	**71**	0	0	**71**	0	0	0	0	0	0	58	0	0	58	0	0	0	0	0	129
09:15 AM	0	55	0	0	55	0	0	0	0	0	0	60	0	0	60	0	0	0	0	0	115
09:30 AM	0	55	0	0	55	0	0	0	0	0	0	**71**	0	0	**71**	0	0	0	0	0	126
09:45 AM	0	67	0	0	67	0	0	0	0	0	0	69	0	0	69	0	0	0	0	0	**136**
Total Volume	0	248	0	0	248	0	0	0	0	0	0	258	0	0	258	0	0	0	0	0	506
% App. Total	0	100	0	0		0	0	0	0		0	100	0	0		0	0	0	0		
PHF	.000	.873	.000	.000	.873	.000	.000	.000	.000	.000	.000	.908	.000	.000	.908	.000	.000	.000	.000	.000	.930

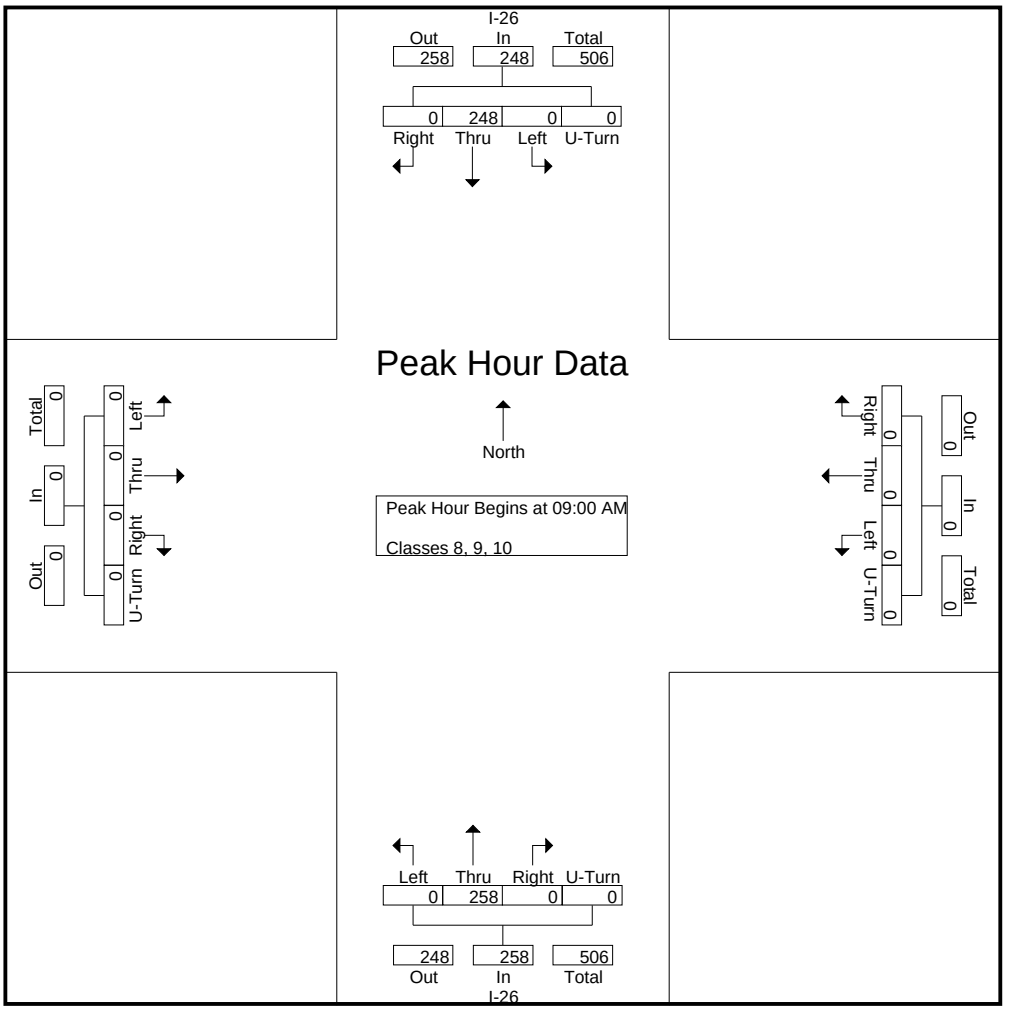

DocuSign Envelope ID: 5C03745C-4B01-4834-A65D-B77F558A4F46

Quality Counts

920 Blairhill Rd, Ste B-106
Charlotte, NC 28217

File Name : 15411719 - I-26 N of Long Shoals Rd
Site Code : 15411719
Start Date : 4/20/2021

	I-26 Southbound					Westbound					I-26 Northbound					Eastbound					
Start Time	Left	Thru	Right	U-Turn	App. Total	Left	Thru	Right	U-Turn	App. Total	Left	Thru	Right	U-Turn	App. Total	Left	Thru	Right	U-Turn	App. Total	Int. Total
Peak Hour Analysis From 12:00 PM to 07:45 PM - Peak 1 of 1																					
Peak Hour for Entire Intersection Begins at 01:45 PM																					
01:45 PM	0	51	0	0	51	0	0	0	0	0	0	84	0	0	84	0	0	0	0	0	135
02:00 PM	0	**62**	0	0	**62**	0	0	0	0	0	0	65	0	0	65	0	0	0	0	0	127
02:15 PM	0	50	0	0	50	0	0	0	0	0	0	66	0	0	66	0	0	0	0	0	116
02:30 PM	0	53	0	0	53	0	0	0	0	0	0	**86**	0	0	**86**	0	0	0	0	0	**139**
Total Volume	0	216	0	0	216	0	0	0	0	0	0	301	0	0	301	0	0	0	0	0	517
% App. Total	0	100	0	0		0	0	0	0		0	100	0	0		0	0	0	0		
PHF	.000	.871	.000	.000	.871	.000	.000	.000	.000	.000	.000	.875	.000	.000	.875	.000	.000	.000	.000	.000	.930

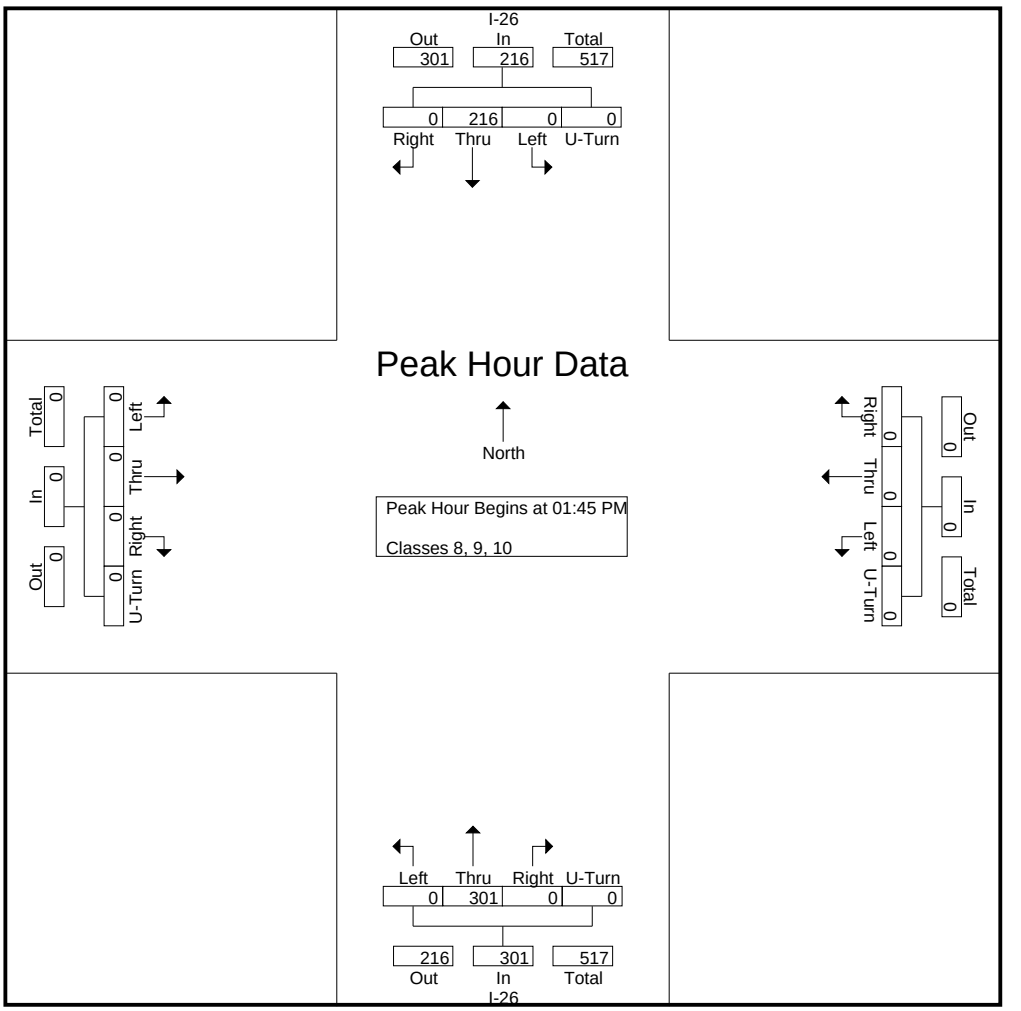

DocuSign Envelope ID: 5C03745C-4B01-4834-A65D-B77F558A4F46

Quality Counts

920 Blairhill Rd, Ste B-106
Charlotte, NC 28217

File Name : 15411719 - I-26 N of Long Shoals Rd
Site Code : 15411719
Start Date : 4/20/2021
Page No : 1

Groups Printed- Classes 11, 12, 13

	I-26 Southbound					Westbound					I-26 Northbound					Eastbound					
Start Time	Left	Thru	Right	U-Turn	App. Total	Left	Thru	Right	U-Turn	App. Total	Left	Thru	Right	U-Turn	App. Total	Left	Thru	Right	U-Turn	App. Total	Int. Total
06:00 AM	0	0	0	0	0	0	0	0	0	0	0	0	0	0	0	0	0	0	0	0	0
06:15 AM	0	0	0	0	0	0	0	0	0	0	0	0	0	0	0	0	0	0	0	0	0
06:30 AM	0	0	0	0	0	0	0	0	0	0	0	0	0	0	0	0	0	0	0	0	0
06:45 AM	0	0	0	0	0	0	0	0	0	0	0	0	0	0	0	0	0	0	0	0	0
Total	0	0	0	0	0	0	0	0	0	0	0	0	0	0	0	0	0	0	0	0	0
07:00 AM	0	0	0	0	0	0	0	0	0	0	0	0	0	0	0	0	0	0	0	0	0
07:15 AM	0	1	0	0	1	0	0	0	0	0	0	4	0	0	4	0	0	0	0	0	5
07:30 AM	0	0	0	0	0	0	0	0	0	0	0	3	0	0	3	0	0	0	0	0	3
07:45 AM	0	1	0	0	1	0	0	0	0	0	0	4	0	0	4	0	0	0	0	0	5
Total	0	2	0	0	2	0	0	0	0	0	0	11	0	0	11	0	0	0	0	0	13
08:00 AM	0	0	0	0	0	0	0	0	0	0	0	1	0	0	1	0	0	0	0	0	1
08:15 AM	0	0	0	0	0	0	0	0	0	0	0	5	0	0	5	0	0	0	0	0	5
08:30 AM	0	1	0	0	1	0	0	0	0	0	0	4	0	0	4	0	0	0	0	0	5
08:45 AM	0	0	0	0	0	0	0	0	0	0	0	3	0	0	3	0	0	0	0	0	3
Total	0	1	0	0	1	0	0	0	0	0	0	13	0	0	13	0	0	0	0	0	14
09:00 AM	0	1	0	0	1	0	0	0	0	0	0	3	0	0	3	0	0	0	0	0	4
09:15 AM	0	0	0	0	0	0	0	0	0	0	0	2	0	0	2	0	0	0	0	0	2
09:30 AM	0	0	0	0	0	0	0	0	0	0	0	1	0	0	1	0	0	0	0	0	1
09:45 AM	0	0	0	0	0	0	0	0	0	0	0	1	0	0	1	0	0	0	0	0	1
Total	0	1	0	0	1	0	0	0	0	0	0	7	0	0	7	0	0	0	0	0	8
10:00 AM	0	0	0	0	0	0	0	0	0	0	0	1	0	0	1	0	0	0	0	0	1
10:15 AM	0	0	0	0	0	0	0	0	0	0	0	0	0	0	0	0	0	0	0	0	0
10:30 AM	0	0	0	0	0	0	0	0	0	0	0	1	0	0	1	0	0	0	0	0	1
10:45 AM	0	0	0	0	0	0	0	0	0	0	0	0	0	0	0	0	0	0	0	0	0
Total	0	0	0	0	0	0	0	0	0	0	0	2	0	0	2	0	0	0	0	0	2
11:00 AM	0	0	0	0	0	0	0	0	0	0	0	0	0	0	0	0	0	0	0	0	0
11:15 AM	0	0	0	0	0	0	0	0	0	0	0	0	0	0	0	0	0	0	0	0	0
11:30 AM	0	0	0	0	0	0	0	0	0	0	0	1	0	0	1	0	0	0	0	0	1
11:45 AM	0	2	0	0	2	0	0	0	0	0	0	0	0	0	0	0	0	0	0	0	2
Total	0	2	0	0	2	0	0	0	0	0	0	1	0	0	1	0	0	0	0	0	3
12:00 PM	0	1	0	0	1	0	0	0	0	0	0	2	0	0	2	0	0	0	0	0	3
12:15 PM	0	3	0	0	3	0	0	0	0	0	0	0	0	0	0	0	0	0	0	0	3
12:30 PM	0	1	0	0	1	0	0	0	0	0	0	0	0	0	0	0	0	0	0	0	1
12:45 PM	0	2	0	0	2	0	0	0	0	0	0	0	0	0	0	0	0	0	0	0	2
Total	0	7	0	0	7	0	0	0	0	0	0	2	0	0	2	0	0	0	0	0	9
01:00 PM	0	3	0	0	3	0	0	0	0	0	0	0	0	0	0	0	0	0	0	0	3
01:15 PM	0	2	0	0	2	0	0	0	0	0	0	0	0	0	0	0	0	0	0	0	2
01:30 PM	0	0	0	0	0	0	0	0	0	0	0	0	0	0	0	0	0	0	0	0	0
01:45 PM	0	0	0	0	0	0	0	0	0	0	0	0	0	0	0	0	0	0	0	0	0
Total	0	5	0	0	5	0	0	0	0	0	0	0	0	0	0	0	0	0	0	0	5
02:00 PM	0	2	0	0	2	0	0	0	0	0	0	0	0	0	0	0	0	0	0	0	2
02:15 PM	0	1	0	0	1	0	0	0	0	0	0	0	0	0	0	0	0	0	0	0	1
02:30 PM	0	0	0	0	0	0	0	0	0	0	0	0	0	0	0	0	0	0	0	0	0
02:45 PM	0	1	0	0	1	0	0	0	0	0	0	0	0	0	0	0	0	0	0	0	1
Total	0	4	0	0	4	0	0	0	0	0	0	0	0	0	0	0	0	0	0	0	4
03:00 PM	0	1	0	0	1	0	0	0	0	0	0	0	0	0	0	0	0	0	0	0	1
03:15 PM	0	3	0	0	3	0	0	0	0	0	0	1	0	0	1	0	0	0	0	0	4
03:30 PM	0	4	0	0	4	0	0	0	0	0	0	0	0	0	0	0	0	0	0	0	4

DocuSign Envelope ID: 5C03745C-4B01-4834-A65D-B77F558A4F46

Quality Counts

920 Blairhill Rd, Ste B-106
Charlotte, NC 28217

File Name : 15411719 - I-26 N of Long Shoals Rd
Site Code : 15411719
Start Date : 4/20/2021
Page No : 2

Groups Printed- Classes 11, 12, 13

	I-26 Southbound					Westbound					I-26 Northbound					Eastbound					
Start Time	Left	Thru	Right	U-Turn	App. Total	Left	Thru	Right	U-Turn	App. Total	Left	Thru	Right	U-Turn	App. Total	Left	Thru	Right	U-Turn	App. Total	Int. Total
03:45 PM	0	0	0	0	0	0	0	0	0	0	0	0	0	0	0	0	0	0	0	0	0
Total	0	8	0	0	8	0	0	0	0	0	0	1	0	0	1	0	0	0	0	0	9
04:00 PM	0	2	0	0	2	0	0	0	0	0	0	0	0	0	0	0	0	0	0	0	2
04:15 PM	0	1	0	0	1	0	0	0	0	0	0	0	0	0	0	0	0	0	0	0	1
04:30 PM	0	3	0	0	3	0	0	0	0	0	0	0	0	0	0	0	0	0	0	0	3
04:45 PM	0	2	0	0	2	0	0	0	0	0	0	0	0	0	0	0	0	0	0	0	2
Total	0	8	0	0	8	0	0	0	0	0	0	0	0	0	0	0	0	0	0	0	8
05:00 PM	0	1	0	0	1	0	0	0	0	0	0	0	0	0	0	0	0	0	0	0	1
05:15 PM	0	3	0	0	3	0	0	0	0	0	0	0	0	0	0	0	0	0	0	0	3
05:30 PM	0	3	0	0	3	0	0	0	0	0	0	0	0	0	0	0	0	0	0	0	3
05:45 PM	0	6	0	0	6	0	0	0	0	0	0	0	0	0	0	0	0	0	0	0	6
Total	0	13	0	0	13	0	0	0	0	0	0	0	0	0	0	0	0	0	0	0	13
06:00 PM	0	5	0	0	5	0	0	0	0	0	0	1	0	0	1	0	0	0	0	0	6
06:15 PM	0	1	0	0	1	0	0	0	0	0	0	0	0	0	0	0	0	0	0	0	1
06:30 PM	0	3	0	0	3	0	0	0	0	0	0	0	0	0	0	0	0	0	0	0	3
06:45 PM	0	2	0	0	2	0	0	0	0	0	0	0	0	0	0	0	0	0	0	0	2
Total	0	11	0	0	11	0	0	0	0	0	0	1	0	0	1	0	0	0	0	0	12
07:00 PM	0	1	0	0	1	0	0	0	0	0	0	0	0	0	0	0	0	0	0	0	1
07:15 PM	0	0	0	0	0	0	0	0	0	0	0	1	0	0	1	0	0	0	0	0	1
07:30 PM	0	0	0	0	0	0	0	0	0	0	0	0	0	0	0	0	0	0	0	0	0
07:45 PM	0	0	0	0	0	0	0	0	0	0	0	1	0	0	1	0	0	0	0	0	1
Total	0	1	0	0	1	0	0	0	0	0	0	2	0	0	2	0	0	0	0	0	3
Grand Total	0	63	0	0	63	0	0	0	0	0	0	40	0	0	40	0	0	0	0	0	103
Apprch %	0	100	0	0		0	0	0	0		0	100	0	0		0	0	0	0		
Total %	0	61.2	0	0	61.2	0	0	0	0	0	0	38.8	0	0	38.8	0	0	0	0	0	

DocuSign Envelope ID: 5C03745C-4B01-4834-A65D-B77F558A4F46

Quality Counts

920 Blairhill Rd, Ste B-106
Charlotte, NC 28217

File Name : 15411719 - I-26 N of Long Shoals Rd
Site Code : 15411719
Start Date : 4/20/2021
Page No : 3

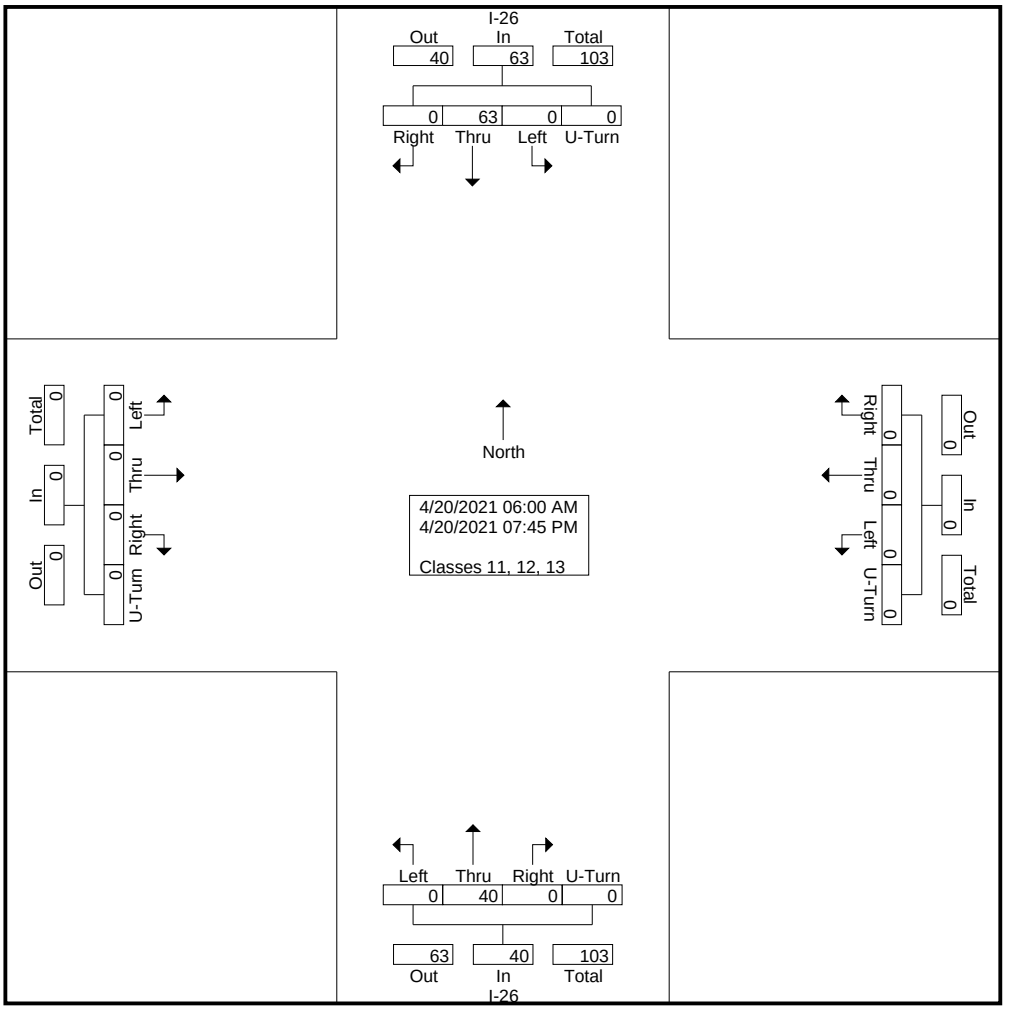

DocuSign Envelope ID: 5C03745C-4B01-4834-A65D-B77F558A4F46

Quality Counts

920 Blairhill Rd, Ste B-106
Charlotte, NC 28217

File Name : 15411719 - I-26 N of Long Shoals Rd
Site Code : 15411719
Start Date : 4/20/2021
Page No : 4

	I-26 Southbound					Westbound					I-26 Northbound					Eastbound					
Start Time	Left	Thru	Right	U-Turn	App. Total	Left	Thru	Right	U-Turn	App. Total	Left	Thru	Right	U-Turn	App. Total	Left	Thru	Right	U-Turn	App. Total	Int. Total
Peak Hour Analysis From 06:00 AM to 11:45 AM - Peak 1 of 1																					
Peak Hour for Entire Intersection Begins at 08:15 AM																					
08:15 AM	0	0	0	0	0	0	0	0	0	0	0	**5**	0	0	**5**	0	0	0	0	0	**5**
08:30 AM	0	**1**	0	0	**1**	0	0	0	0	0	0	4	0	0	4	0	0	0	0	0	5
08:45 AM	0	0	0	0	0	0	0	0	0	0	0	3	0	0	3	0	0	0	0	0	3
09:00 AM	0	1	0	0	1	0	0	0	0	0	0	3	0	0	3	0	0	0	0	0	4
Total Volume	0	2	0	0	2	0	0	0	0	0	0	15	0	0	15	0	0	0	0	0	17
% App. Total	0	100	0	0		0	0	0	0		0	100	0	0		0	0	0	0		
PHF	.000	.500	.000	.000	.500	.000	.000	.000	.000	.000	.000	.750	.000	.000	.750	.000	.000	.000	.000	.000	.850

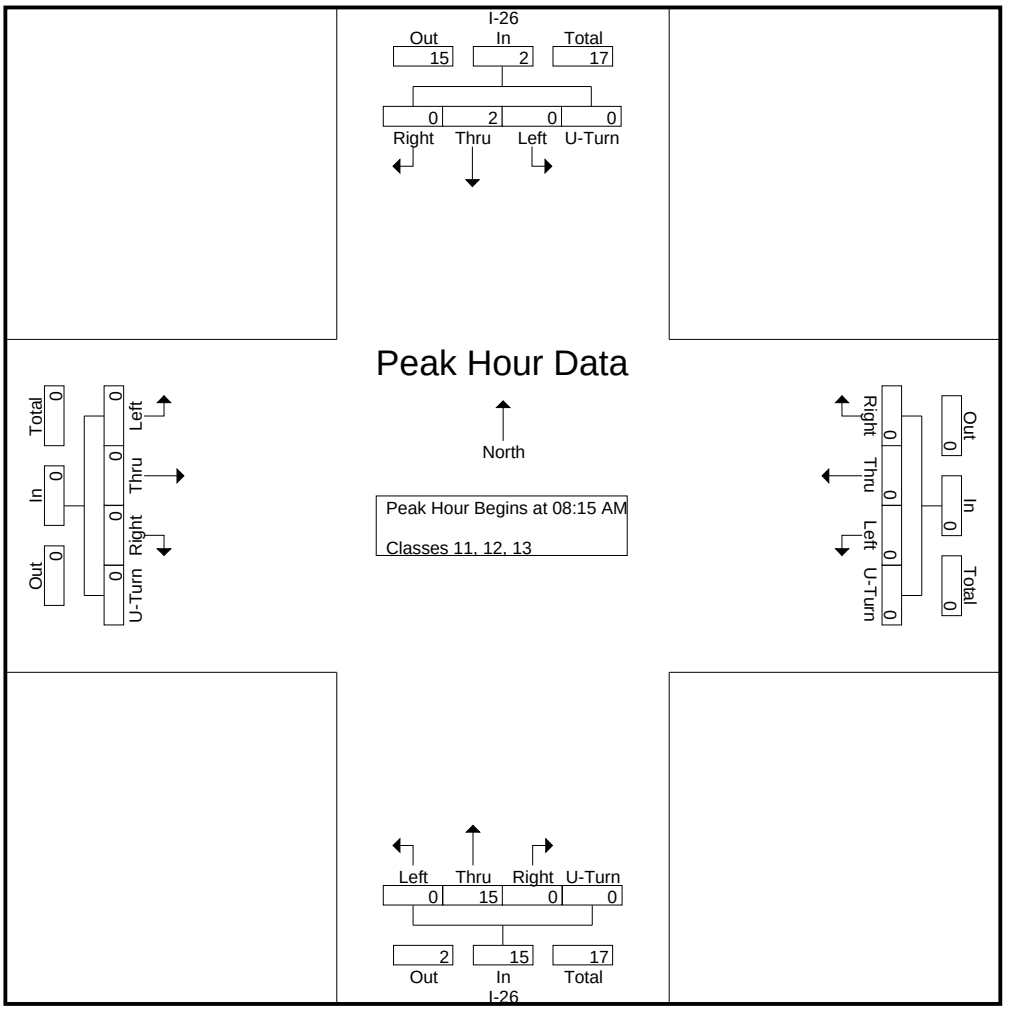

DocuSign Envelope ID: 5C03745C-4B01-4834-A65D-B77F558A4F46

Quality Counts

920 Blairhill Rd, Ste B-106
Charlotte, NC 28217

File Name : 15411719 - I-26 N of Long Shoals Rd
Site Code : 15411719
Start Date : 4/20/2021
Page No : 5

	I-26 Southbound					Westbound					I-26 Northbound					Eastbound					
Start Time	Left	Thru	Right	U-Turn	App. Total	Left	Thru	Right	U-Turn	App. Total	Left	Thru	Right	U-Turn	App. Total	Left	Thru	Right	U-Turn	App. Total	Int. Total
Peak Hour Analysis From 12:00 PM to 07:45 PM - Peak 1 of 1																					
Peak Hour for Entire Intersection Begins at 05:15 PM																					
05:15 PM	0	3	0	0	3	0	0	0	0	0	0	0	0	0	0	0	0	0	0	0	3
05:30 PM	0	3	0	0	3	0	0	0	0	0	0	0	0	0	0	0	0	0	0	0	3
05:45 PM	0	**6**	0	0	**6**	0	0	0	0	0	0	0	0	0	0	0	0	0	0	0	**6**
06:00 PM	0	5	0	0	5	0	0	0	0	0	0	**1**	0	0	**1**	0	0	0	0	0	6
Total Volume	0	17	0	0	17	0	0	0	0	0	0	1	0	0	1	0	0	0	0	0	18
% App. Total	0	100	0	0		0	0	0	0		0	100	0	0		0	0	0	0		
PHF	.000	.708	.000	.000	.708	.000	.000	.000	.000	.000	.000	.250	.000	.000	.250	.000	.000	.000	.000	.000	.750

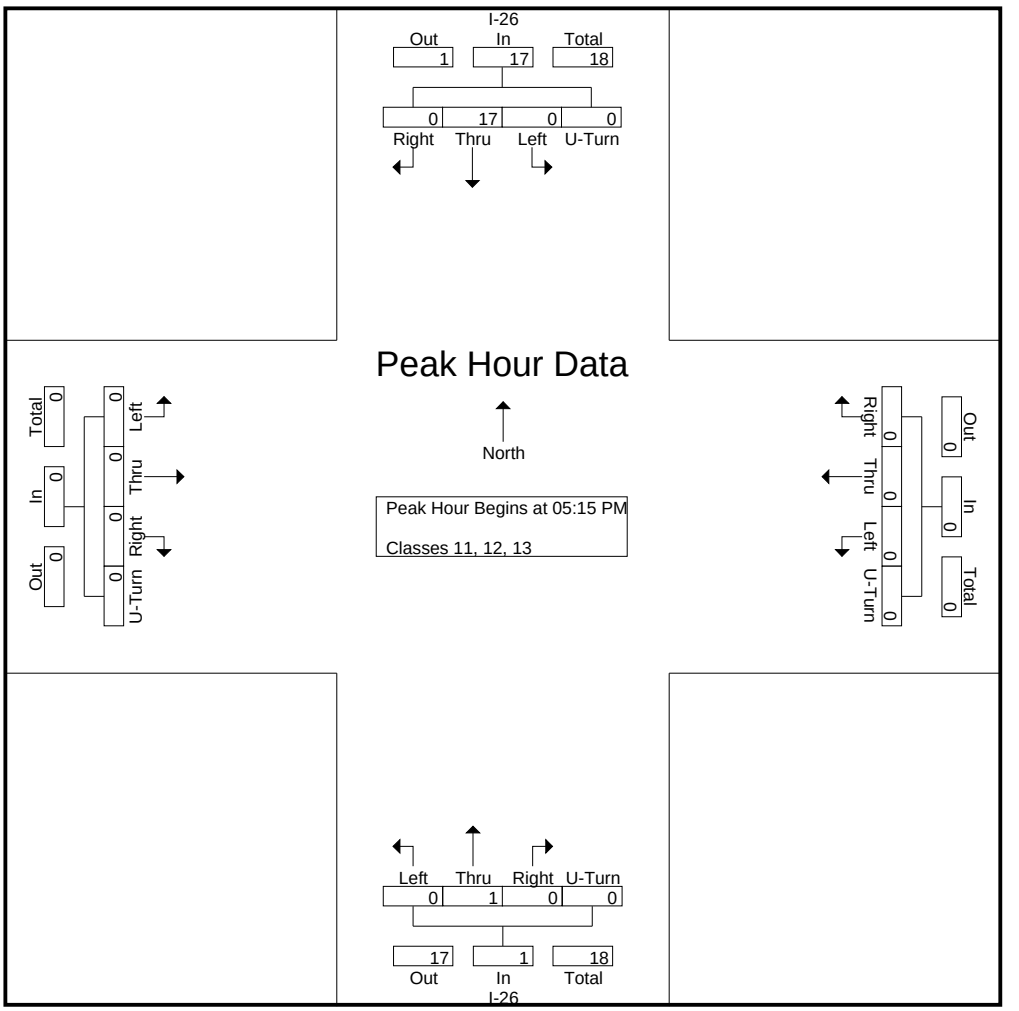

DocuSign Envelope ID: 5C03745C-4B01-4834-A65D-B77F558A4F46

Quality Counts

920 Blairhill Rd, Ste B-106
Charlotte, NC 28217

File Name : 15411719 - I-26 N of Long Shoals Rd
Site Code : 15411719
Start Date : 4/20/2021
Page No : 1

Groups Printed- Bikes, Peds

	I-26 Southbound					Westbound					I-26 Northbound					Eastbound					
Start Time	Left	Thru	Right	Peds	App. Total	Left	Thru	Right	Peds	App. Total	Left	Thru	Right	Peds	App. Total	Left	Thru	Right	Peds	App. Total	Int. Total
06:00 AM	0	0	0	0	0	0	0	0	0	0	0	0	0	0	0	0	0	0	0	0	0
06:15 AM	0	0	0	0	0	0	0	0	0	0	0	0	0	0	0	0	0	0	0	0	0
06:30 AM	0	0	0	0	0	0	0	0	0	0	0	1	0	0	1	0	0	0	0	0	1
06:45 AM	0	0	0	0	0	0	0	0	0	0	0	0	0	0	0	0	0	0	0	0	0
Total	0	0	0	0	0	0	0	0	0	0	0	1	0	0	1	0	0	0	0	0	1
07:00 AM	0	0	0	0	0	0	0	0	0	0	0	0	0	0	0	0	0	0	0	0	0
07:15 AM	0	0	0	0	0	0	0	0	0	0	0	0	0	0	0	0	0	0	0	0	0
07:30 AM	0	0	0	0	0	0	0	0	0	0	0	0	0	0	0	0	0	0	0	0	0
07:45 AM	0	0	0	0	0	0	0	0	0	0	0	0	0	0	0	0	0	0	0	0	0
Total	0	0	0	0	0	0	0	0	0	0	0	0	0	0	0	0	0	0	0	0	0
08:00 AM	0	0	0	0	0	0	0	0	0	0	0	0	0	0	0	0	0	0	0	0	0
08:15 AM	0	0	0	0	0	0	0	0	0	0	0	0	0	0	0	0	0	0	0	0	0
08:30 AM	0	0	0	0	0	0	0	0	0	0	0	0	0	0	0	0	0	0	0	0	0
08:45 AM	0	0	0	0	0	0	0	0	0	0	0	0	0	0	0	0	0	0	0	0	0
Total	0	0	0	0	0	0	0	0	0	0	0	0	0	0	0	0	0	0	0	0	0
09:00 AM	0	0	0	0	0	0	0	0	0	0	0	0	0	0	0	0	0	0	0	0	0
09:15 AM	0	0	0	0	0	0	0	0	0	0	0	0	0	0	0	0	0	0	0	0	0
09:30 AM	0	0	0	0	0	0	0	0	0	0	0	0	0	0	0	0	0	0	0	0	0
09:45 AM	0	0	0	0	0	0	0	0	0	0	0	0	0	0	0	0	0	0	0	0	0
Total	0	0	0	0	0	0	0	0	0	0	0	0	0	0	0	0	0	0	0	0	0
10:00 AM	0	0	0	0	0	0	0	0	0	0	0	0	0	0	0	0	0	0	0	0	0
10:15 AM	0	0	0	0	0	0	0	0	0	0	0	0	0	0	0	0	0	0	0	0	0
10:30 AM	0	0	0	0	0	0	0	0	0	0	0	0	0	0	0	0	0	0	0	0	0
10:45 AM	0	0	0	0	0	0	0	0	0	0	0	0	0	0	0	0	0	0	0	0	0
Total	0	0	0	0	0	0	0	0	0	0	0	0	0	0	0	0	0	0	0	0	0
11:00 AM	0	0	0	0	0	0	0	0	0	0	0	0	0	0	0	0	0	0	0	0	0
11:15 AM	0	0	0	0	0	0	0	0	0	0	0	0	0	0	0	0	0	0	0	0	0
11:30 AM	0	0	0	0	0	0	0	0	0	0	0	0	0	0	0	0	0	0	0	0	0
11:45 AM	0	0	0	0	0	0	0	0	0	0	0	0	0	0	0	0	0	0	0	0	0
Total	0	0	0	0	0	0	0	0	0	0	0	0	0	0	0	0	0	0	0	0	0
12:00 PM	0	0	0	0	0	0	0	0	0	0	0	0	0	0	0	0	0	0	0	0	0
12:15 PM	0	0	0	0	0	0	0	0	0	0	0	0	0	0	0	0	0	0	0	0	0
12:30 PM	0	0	0	0	0	0	0	0	0	0	0	0	0	0	0	0	0	0	0	0	0
12:45 PM	0	0	0	0	0	0	0	0	0	0	0	0	0	0	0	0	0	0	0	0	0
Total	0	0	0	0	0	0	0	0	0	0	0	0	0	0	0	0	0	0	0	0	0
01:00 PM	0	0	0	0	0	0	0	0	0	0	0	0	0	0	0	0	0	0	0	0	0
01:15 PM	0	0	0	0	0	0	0	0	0	0	0	0	0	0	0	0	0	0	0	0	0
01:30 PM	0	0	0	0	0	0	0	0	0	0	0	0	0	0	0	0	0	0	0	0	0
01:45 PM	0	0	0	0	0	0	0	0	0	0	0	0	0	0	0	0	0	0	0	0	0
Total	0	0	0	0	0	0	0	0	0	0	0	0	0	0	0	0	0	0	0	0	0
02:00 PM	0	0	0	0	0	0	0	0	0	0	0	0	0	0	0	0	0	0	0	0	0
02:15 PM	0	0	0	0	0	0	0	0	0	0	0	0	0	0	0	0	0	0	0	0	0
02:30 PM	0	0	0	0	0	0	0	0	0	0	0	0	0	0	0	0	0	0	0	0	0
02:45 PM	0	0	0	0	0	0	0	0	0	0	0	0	0	0	0	0	0	0	0	0	0
Total	0	0	0	0	0	0	0	0	0	0	0	0	0	0	0	0	0	0	0	0	0
03:00 PM	0	0	0	0	0	0	0	0	0	0	0	0	0	0	0	0	0	0	0	0	0
03:15 PM	0	0	0	0	0	0	0	0	0	0	0	0	0	0	0	0	0	0	0	0	0
03:30 PM	0	0	0	0	0	0	0	0	0	0	0	0	0	0	0	0	0	0	0	0	0

DocuSign Envelope ID: 5C03745C-4B01-4834-A65D-B77F558A4F46

Quality Counts

920 Blairhill Rd, Ste B-106
Charlotte, NC 28217

File Name : 15411719 - I-26 N of Long Shoals Rd
Site Code : 15411719
Start Date : 4/20/2021
Page No : 2

Groups Printed- Bikes, Peds

	I-26 Southbound					Westbound					I-26 Northbound					Eastbound					
Start Time	Left	Thru	Right	Peds	App. Total	Left	Thru	Right	Peds	App. Total	Left	Thru	Right	Peds	App. Total	Left	Thru	Right	Peds	App. Total	Int. Total
03:45 PM	0	0	0	0	0	0	0	0	0	0	0	0	0	0	0	0	0	0	0	0	0
Total	0	0	0	0	0	0	0	0	0	0	0	0	0	0	0	0	0	0	0	0	0
04:00 PM	0	0	0	0	0	0	0	0	0	0	0	0	0	0	0	0	0	0	0	0	0
04:15 PM	0	0	0	0	0	0	0	0	0	0	0	0	0	0	0	0	0	0	0	0	0
04:30 PM	0	0	0	0	0	0	0	0	0	0	0	0	0	0	0	0	0	0	0	0	0
04:45 PM	0	0	0	0	0	0	0	0	0	0	0	0	0	0	0	0	0	0	0	0	0
Total	0	0	0	0	0	0	0	0	0	0	0	0	0	0	0	0	0	0	0	0	0
05:00 PM	0	0	0	0	0	0	0	0	0	0	0	0	0	0	0	0	0	0	0	0	0
05:15 PM	0	0	0	0	0	0	0	0	0	0	0	0	0	0	0	0	0	0	0	0	0
05:30 PM	0	0	0	0	0	0	0	0	0	0	0	0	0	0	0	0	0	0	0	0	0
05:45 PM	0	0	0	0	0	0	0	0	0	0	0	0	0	0	0	0	0	0	0	0	0
Total	0	0	0	0	0	0	0	0	0	0	0	0	0	0	0	0	0	0	0	0	0
06:00 PM	0	0	0	0	0	0	0	0	0	0	0	0	0	0	0	0	0	0	0	0	0
06:15 PM	0	0	0	0	0	0	0	0	0	0	0	0	0	0	0	0	0	0	0	0	0
06:30 PM	0	0	0	0	0	0	0	0	0	0	0	0	0	0	0	0	0	0	0	0	0
06:45 PM	0	0	0	0	0	0	0	0	0	0	0	0	0	0	0	0	0	0	0	0	0
Total	0	0	0	0	0	0	0	0	0	0	0	0	0	0	0	0	0	0	0	0	0
07:00 PM	0	0	0	0	0	0	0	0	0	0	0	0	0	0	0	0	0	0	0	0	0
07:15 PM	0	0	0	0	0	0	0	0	0	0	0	0	0	0	0	0	0	0	0	0	0
07:30 PM	0	0	0	0	0	0	0	0	0	0	0	0	0	0	0	0	0	0	0	0	0
07:45 PM	0	0	0	0	0	0	0	0	0	0	0	0	0	0	0	0	0	0	0	0	0
Total	0	0	0	0	0	0	0	0	0	0	0	0	0	0	0	0	0	0	0	0	0
Grand Total	0	0	0	0	0	0	0	0	0	0	0	1	0	0	1	0	0	0	0	0	1
Apprch %	0	0	0	0		0	0	0	0		0	100	0	0		0	0	0	0		
Total %	0	0	0	0	0	0	0	0	0	0	0	100	0	0	100	0	0	0	0	0	

DocuSign Envelope ID: 5C03745C-4B01-4834-A65D-B77F558A4F46

Quality Counts

920 Blairhill Rd, Ste B-106
Charlotte, NC 28217

File Name : 15411719 - I-26 N of Long Shoals Rd
Site Code : 15411719
Start Date : 4/20/2021
Page No : 3

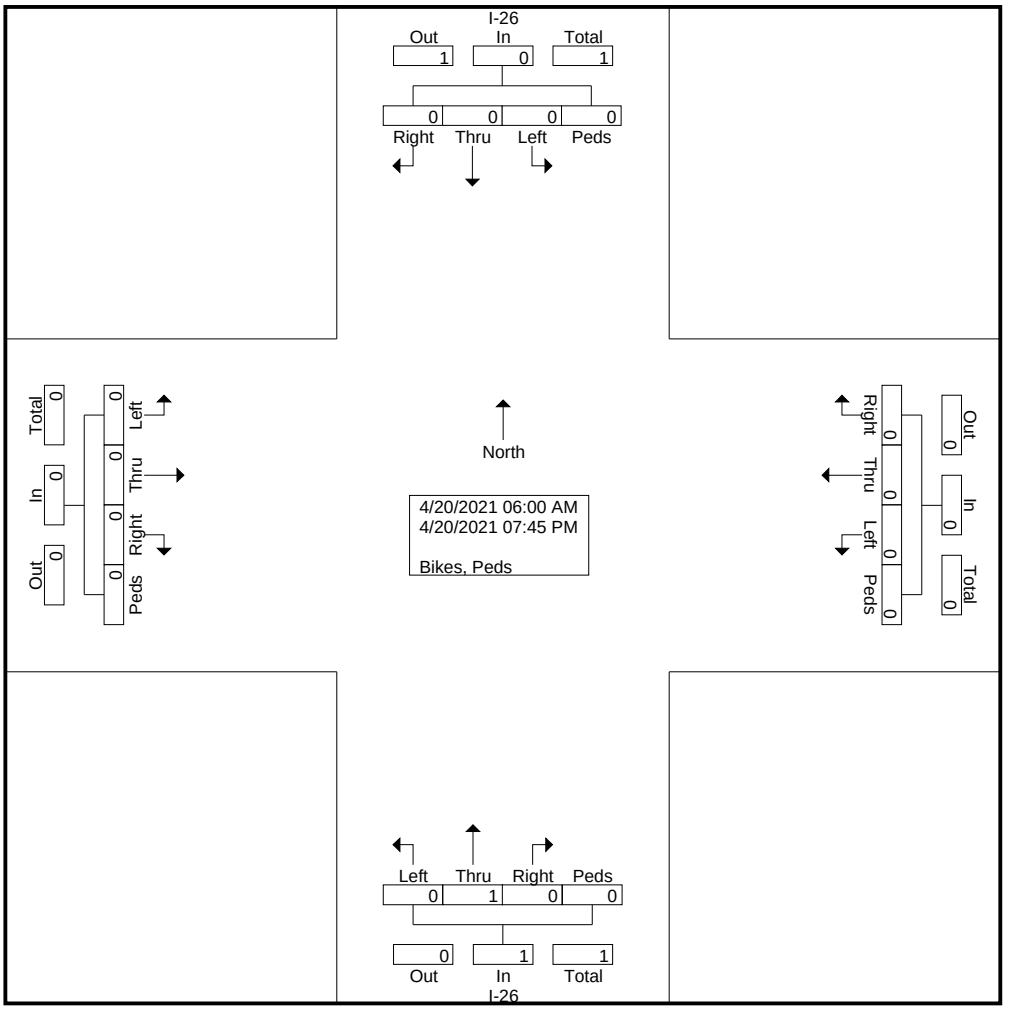

DocuSign Envelope ID: 5C03745C-4B01-4834-A65D-B77F558A4F46

Quality Counts

920 Blairhill Rd, Ste B-106
Charlotte, NC 28217

File Name : 15411719 - I-26 N of Long Shoals Rd
Site Code : 15411719
Start Date : 4/20/2021
Page No : 4

	I-26 Southbound					Westbound					I-26 Northbound					Eastbound					
Start Time	Left	Thru	Right	Peds	App. Total	Left	Thru	Right	Peds	App. Total	Left	Thru	Right	Peds	App. Total	Left	Thru	Right	Peds	App. Total	Int. Total
Peak Hour Analysis From 06:00 AM to 11:45 AM - Peak 1 of 1																					
Peak Hour for Entire Intersection Begins at 06:00 AM																					
06:00 AM	0	0	0	0	0	0	0	0	0	0	0	0	0	0	0	0	0	0	0	0	0
06:15 AM	0	0	0	0	0	0	0	0	0	0	0	0	0	0	0	0	0	0	0	0	0
06:30 AM	0	0	0	0	0	0	0	0	0	0	0	**1**	0	0	**1**	0	0	0	0	0	**1**
06:45 AM	0	0	0	0	0	0	0	0	0	0	0	0	0	0	0	0	0	0	0	0	0
Total Volume	0	0	0	0	0	0	0	0	0	0	0	1	0	0	1	0	0	0	0	0	1
% App. Total	0	0	0	0		0	0	0	0		0	100	0	0		0	0	0	0		
PHF	.000	.000	.000	.000	.000	.000	.000	.000	.000	.000	.000	.250	.000	.000	.250	.000	.000	.000	.000	.000	.250

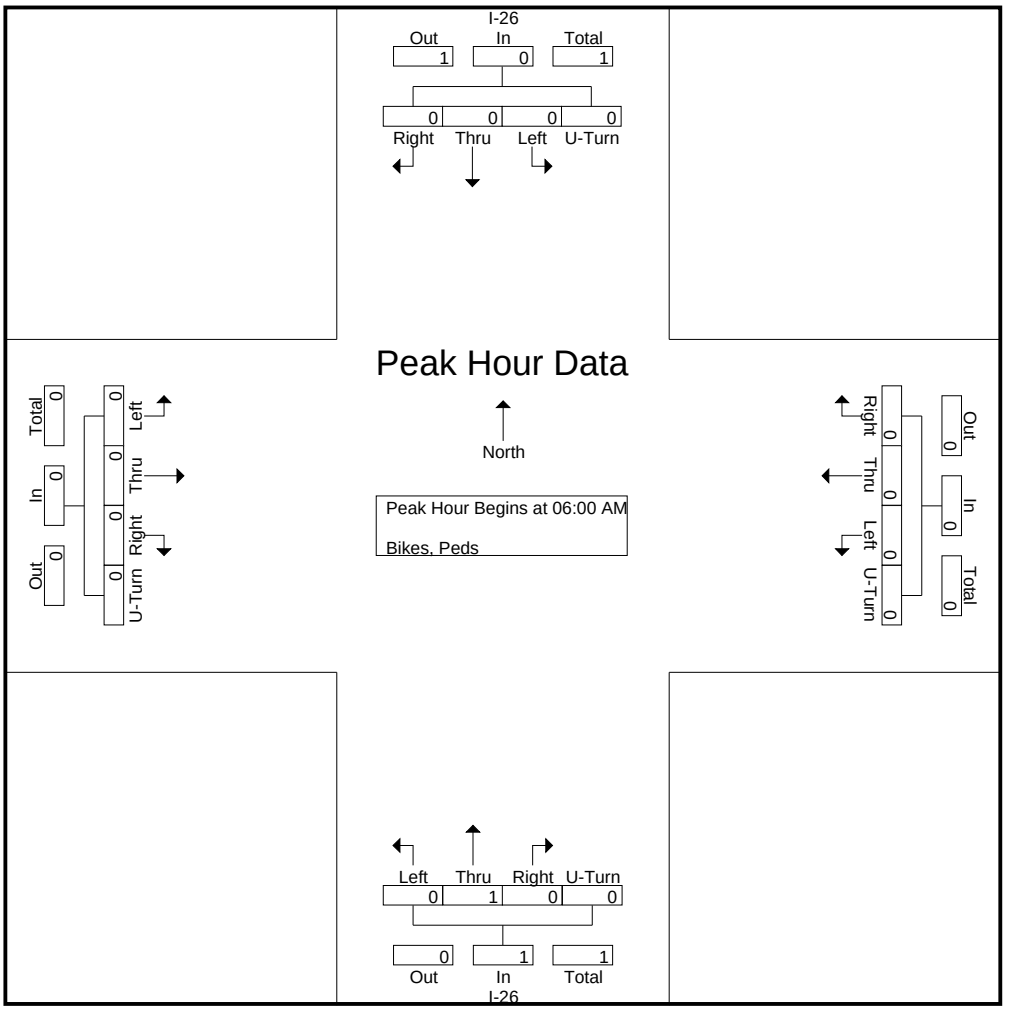

DocuSign Envelope ID: 5C03745C-4B01-4834-A65D-B77F558A4F46

Quality Counts

920 Blairhill Rd, Ste B-106
Charlotte, NC 28217

File Name : 15411719 - I-26 N of Long Shoals Rd
Site Code : 15411719
Start Date : 4/20/2021

	I-26 Southbound					Westbound					I-26 Northbound					Eastbound					
Start Time	Left	Thru	Right	Peds	App. Total	Left	Thru	Right	Peds	App. Total	Left	Thru	Right	Peds	App. Total	Left	Thru	Right	Peds	App. Total	Int. Total
Peak Hour Analysis From 12:00 PM to 07:45 PM - Peak 1 of 1																					
Peak Hour for Entire Intersection Begins at 12:00 PM																					
12:00 PM	0	0	0	0	0	0	0	0	0	0	0	0	0	0	0	0	0	0	0	0	0
12:15 PM	0	0	0	0	0	0	0	0	0	0	0	0	0	0	0	0	0	0	0	0	0
12:30 PM	0	0	0	0	0	0	0	0	0	0	0	0	0	0	0	0	0	0	0	0	0
12:45 PM	0	0	0	0	0	0	0	0	0	0	0	0	0	0	0	0	0	0	0	0	0
Total Volume	0	0	0	0	0	0	0	0	0	0	0	0	0	0	0	0	0	0	0	0	0
% App. Total	0	0	0	0		0	0	0	0		0	0	0	0		0	0	0	0		
PHF	.000	.000	.000	.000	.000	.000	.000	.000	.000	.000	.000	.000	.000	.000	.000	.000	.000	.000	.000	.000	.000

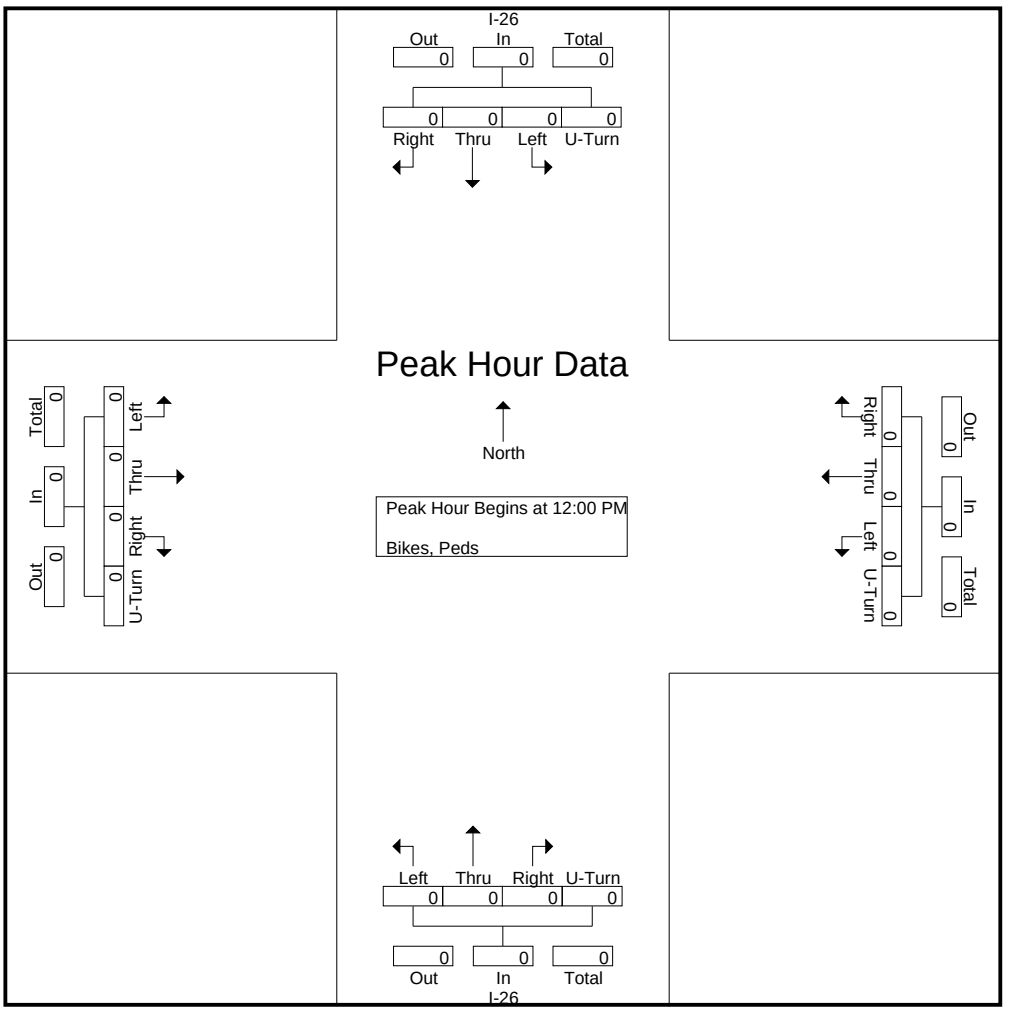

DocuSign Envelope ID: 5C03745C-4B01-4834-A65D-B77F558A4F46

QUALITY COUNTS LLC
920 Blairhill Rd, Suite 106, Charlotte, NC 28217
704.215.4616

Count Number: 15411720
County: Buncombe
City: Arden
Division: 13

Location: I-26 S of Long Shoals Rd
General Location Type: Mainline
Count Type: Turning Movement (Classification)
Count Start Date: 4/20/2021
Time: 6:00 AM – 8:00 PM
Volume: 61,879

Maximum Temperature: 69° F
Minimum Temperature: 40° F
Precipitation: 0.00 in
Snowfall: 0.0 in
Average Sky Cover: 0.2
Weather Conditions: Clear

1. **School in Session:** Yes
2. **Pedestrians Counted**: Yes
3. **Disabled Pedestrians Present**: No
   Description and Approaches Used: N/A
4. **Counted By**: Anthony Garguilo
5. **Data Processor**: Jon B
6. **Signal Inventory**: N/A
7. **Data Collection Method**: Video/Count Board
8. **Equipment Operating Properly**: Yes
9. **Area Lighting Present**: No
10. **Nearest Roadway Stop Sign < 300 ft:** No
    If yes, list approaches: N/A
11. **Nearest Traffic Signal < 300 ft:** No
    If yes, list approaches: N/A
12. **At-Grade Railroad Crossing Present (<200 ft):** No
    If yes, list approaches & distance: N/A
13. **Other:**

↑ North

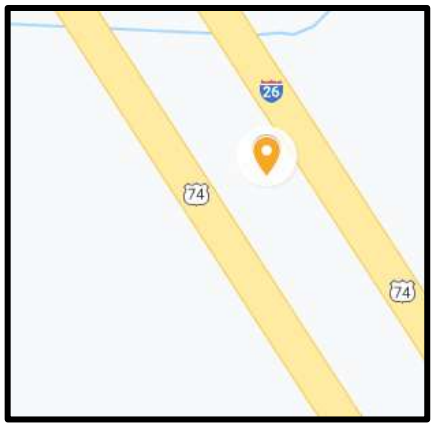

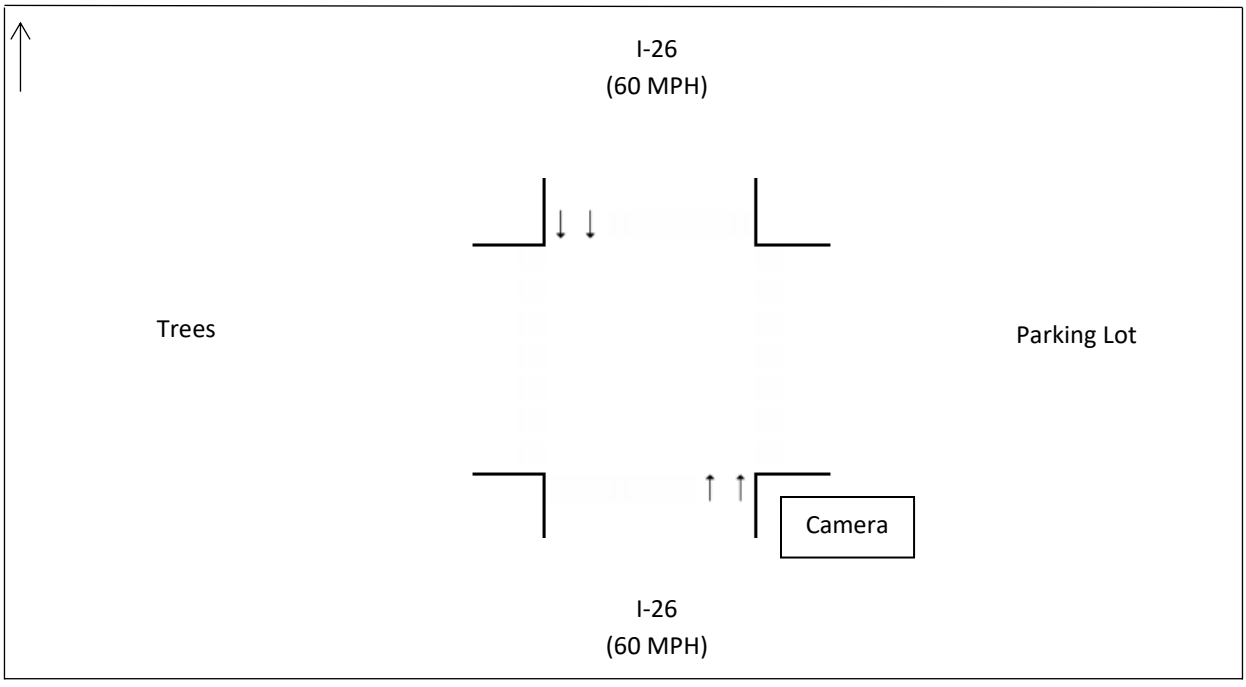

DocuSign Envelope ID: 5C03745C-4B01-4834-A65D-B77F558A4F46

Quality Counts

920 Blairhill Rd, Ste B-106
Charlotte, NC 28217

File Name : 15411720 - I-26 S of Long Shoals Rd
Site Code : 15411720
Start Date : 4/20/2021
Page No : 1

Groups Printed- Classes 1, 2, 3 - Classes 4, 5, 6, 7 - Classes 8, 9, 10 - Classes 11, 12, 13

	I-26 Southbound					Westbound					I-26 Northbound					Eastbound					
Start Time	Left	Thru	Right	U-Turn	App. Total	Left	Thru	Right	U-Turn	App. Total	Left	Thru	Right	U-Turn	App. Total	Left	Thru	Right	U-Turn	App. Total	Int. Total
06:00 AM	0	243	0	0	243	0	0	0	0	0	0	236	0	0	236	0	0	0	0	0	479
06:15 AM	0	379	0	0	379	0	0	0	0	0	0	327	0	0	327	0	0	0	0	0	706
06:30 AM	0	442	0	0	442	0	0	0	0	0	0	452	0	0	452	0	0	0	0	0	894
06:45 AM	0	462	0	0	462	0	0	0	0	0	0	509	0	0	509	0	0	0	0	0	971
Total	0	1526	0	0	1526	0	0	0	0	0	0	1524	0	0	1524	0	0	0	0	0	3050
07:00 AM	0	435	0	0	435	0	0	0	0	0	0	529	0	0	529	0	0	0	0	0	964
07:15 AM	0	515	0	0	515	0	0	0	0	0	0	702	0	0	702	0	0	0	0	0	1217
07:30 AM	0	641	0	0	641	0	0	0	0	0	0	769	0	0	769	0	0	0	0	0	1410
07:45 AM	0	688	0	0	688	0	0	0	0	0	0	810	0	0	810	0	0	0	0	0	1498
Total	0	2279	0	0	2279	0	0	0	0	0	0	2810	0	0	2810	0	0	0	0	0	5089
08:00 AM	0	595	0	0	595	0	0	0	0	0	0	668	0	0	668	0	0	0	0	0	1263
08:15 AM	0	584	0	0	584	0	0	0	0	0	0	657	0	0	657	0	0	0	0	0	1241
08:30 AM	0	587	0	0	587	0	0	0	0	0	0	633	0	0	633	0	0	0	0	0	1220
08:45 AM	0	620	0	0	620	0	0	0	0	0	0	582	0	0	582	0	0	0	0	0	1202
Total	0	2386	0	0	2386	0	0	0	0	0	0	2540	0	0	2540	0	0	0	0	0	4926
09:00 AM	0	547	0	0	547	0	0	0	0	0	0	540	0	0	540	0	0	0	0	0	1087
09:15 AM	0	554	0	0	554	0	0	0	0	0	0	545	0	0	545	0	0	0	0	0	1099
09:30 AM	0	560	0	0	560	0	0	0	0	0	0	555	0	0	555	0	0	0	0	0	1115
09:45 AM	0	556	0	0	556	0	0	0	0	0	0	548	0	0	548	0	0	0	0	0	1104
Total	0	2217	0	0	2217	0	0	0	0	0	0	2188	0	0	2188	0	0	0	0	0	4405
10:00 AM	0	520	0	0	520	0	0	0	0	0	0	515	0	0	515	0	0	0	0	0	1035
10:15 AM	0	489	0	0	489	0	0	0	0	0	0	560	0	0	560	0	0	0	0	0	1049
10:30 AM	0	555	0	0	555	0	0	0	0	0	0	572	0	0	572	0	0	0	0	0	1127
10:45 AM	0	473	0	0	473	0	0	0	0	0	0	541	0	0	541	0	0	0	0	0	1014
Total	0	2037	0	0	2037	0	0	0	0	0	0	2188	0	0	2188	0	0	0	0	0	4225
11:00 AM	0	538	0	0	538	0	0	0	0	0	0	517	0	0	517	0	0	0	0	0	1055
11:15 AM	0	513	0	0	513	0	0	0	0	0	0	575	0	0	575	0	0	0	0	0	1088
11:30 AM	0	563	0	0	563	0	0	0	0	0	0	558	0	0	558	0	0	0	0	0	1121
11:45 AM	0	523	0	0	523	0	0	0	0	0	0	570	0	0	570	0	0	0	0	0	1093
Total	0	2137	0	0	2137	0	0	0	0	0	0	2220	0	0	2220	0	0	0	0	0	4357
12:00 PM	0	570	0	0	570	0	0	0	0	0	0	554	0	0	554	0	0	0	0	0	1124
12:15 PM	0	599	0	0	599	0	0	0	0	0	0	573	0	0	573	0	0	0	0	0	1172
12:30 PM	0	542	0	0	542	0	0	0	0	0	0	583	0	0	583	0	0	0	0	0	1125
12:45 PM	0	519	0	0	519	0	0	0	0	0	0	539	0	0	539	0	0	0	0	0	1058
Total	0	2230	0	0	2230	0	0	0	0	0	0	2249	0	0	2249	0	0	0	0	0	4479
01:00 PM	0	547	0	0	547	0	0	0	0	0	0	585	0	0	585	0	0	0	0	0	1132
01:15 PM	0	547	0	0	547	0	0	0	0	0	0	581	0	0	581	0	0	0	0	0	1128
01:30 PM	0	556	0	0	556	0	0	0	0	0	0	608	0	0	608	0	0	0	0	0	1164
01:45 PM	0	538	0	0	538	0	0	0	0	0	0	613	0	0	613	0	0	0	0	0	1151
Total	0	2188	0	0	2188	0	0	0	0	0	0	2387	0	0	2387	0	0	0	0	0	4575
02:00 PM	0	532	0	0	532	0	0	0	0	0	0	603	0	0	603	0	0	0	0	0	1135
02:15 PM	0	611	0	0	611	0	0	0	0	0	0	650	0	0	650	0	0	0	0	0	1261
02:30 PM	0	526	0	0	526	0	0	0	0	0	0	641	0	0	641	0	0	0	0	0	1167
02:45 PM	0	568	0	0	568	0	0	0	0	0	0	608	0	0	608	0	0	0	0	0	1176
Total	0	2237	0	0	2237	0	0	0	0	0	0	2502	0	0	2502	0	0	0	0	0	4739
03:00 PM	0	608	0	0	608	0	0	0	0	0	0	618	0	0	618	0	0	0	0	0	1226
03:15 PM	0	656	0	0	656	0	0	0	0	0	0	714	0	0	714	0	0	0	0	0	1370
03:30 PM	0	543	0	0	543	0	0	0	0	0	0	690	0	0	690	0	0	0	0	0	1233

DocuSign Envelope ID: 5C03745C-4B01-4834-A65D-B77F558A4F46

Quality Counts

920 Blairhill Rd, Ste B-106
Charlotte, NC 28217

File Name : 15411720 - I-26 S of Long Shoals Rd
Site Code : 15411720
Start Date : 4/20/2021
Page No : 2

Groups Printed- Classes 1, 2, 3 - Classes 4, 5, 6, 7 - Classes 8, 9, 10 - Classes 11, 12, 13

	I-26 Southbound					Westbound					I-26 Northbound					Eastbound					
Start Time	Left	Thru	Right	U-Turn	App. Total	Left	Thru	Right	U-Turn	App. Total	Left	Thru	Right	U-Turn	App. Total	Left	Thru	Right	U-Turn	App. Total	Int. Total
03:45 PM	0	708	0	0	708	0	0	0	0	0	0	697	0	0	697	0	0	0	0	0	1405
Total	0	2515	0	0	2515	0	0	0	0	0	0	2719	0	0	2719	0	0	0	0	0	5234
04:00 PM	0	588	0	0	588	0	0	0	0	0	0	661	0	0	661	0	0	0	0	0	1249
04:15 PM	0	790	0	0	790	0	0	0	0	0	0	667	0	0	667	0	0	0	0	0	1457
04:30 PM	0	709	0	0	709	0	0	0	0	0	0	626	0	0	626	0	0	0	0	0	1335
04:45 PM	0	749	0	0	749	0	0	0	0	0	0	628	0	0	628	0	0	0	0	0	1377
Total	0	2836	0	0	2836	0	0	0	0	0	0	2582	0	0	2582	0	0	0	0	0	5418
05:00 PM	0	708	0	0	708	0	0	0	0	0	0	643	0	0	643	0	0	0	0	0	1351
05:15 PM	0	790	0	0	790	0	0	0	0	0	0	635	0	0	635	0	0	0	0	0	1425
05:30 PM	0	708	0	0	708	0	0	0	0	0	0	614	0	0	614	0	0	0	0	0	1322
05:45 PM	0	607	0	0	607	0	0	0	0	0	0	603	0	0	603	0	0	0	0	0	1210
Total	0	2813	0	0	2813	0	0	0	0	0	0	2495	0	0	2495	0	0	0	0	0	5308
06:00 PM	0	567	0	0	567	0	0	0	0	0	0	546	0	0	546	0	0	0	0	0	1113
06:15 PM	0	558	0	0	558	0	0	0	0	0	0	540	0	0	540	0	0	0	0	0	1098
06:30 PM	0	494	0	0	494	0	0	0	0	0	0	435	0	0	435	0	0	0	0	0	929
06:45 PM	0	431	0	0	431	0	0	0	0	0	0	353	0	0	353	0	0	0	0	0	784
Total	0	2050	0	0	2050	0	0	0	0	0	0	1874	0	0	1874	0	0	0	0	0	3924
07:00 PM	0	182	0	0	182	0	0	0	0	0	0	183	0	0	183	0	0	0	0	0	365
07:15 PM	0	264	0	0	264	0	0	0	0	0	0	346	0	0	346	0	0	0	0	0	610
07:30 PM	0	255	0	0	255	0	0	0	0	0	0	304	0	0	304	0	0	0	0	0	559
07:45 PM	0	303	0	0	303	0	0	0	0	0	0	313	0	0	313	0	0	0	0	0	616
Total	0	1004	0	0	1004	0	0	0	0	0	0	1146	0	0	1146	0	0	0	0	0	2150
Grand Total	0	30455	0	0	30455	0	0	0	0	0	0	31424	0	0	31424	0	0	0	0	0	61879
Apprch %	0	100	0	0		0	0	0	0		0	100	0	0		0	0	0	0		
Total %	0	49.2	0	0	49.2	0	0	0	0	0	0	50.8	0	0	50.8	0	0	0	0	0	
Classes 1, 2, 3	0	26094	0	0	26094	0	0	0	0	0	0	26632	0	0	26632	0	0	0	0	0	52726
% Classes 1, 2, 3	0	85.7	0	0	85.7	0	0	0	0	0	0	84.8	0	0	84.8	0	0	0	0	0	85.2
Classes 4, 5, 6, 7	0	1188	0	0	1188	0	0	0	0	0	0	1240	0	0	1240	0	0	0	0	0	2428
% Classes 4, 5, 6, 7	0	3.9	0	0	3.9	0	0	0	0	0	0	3.9	0	0	3.9	0	0	0	0	0	3.9
Classes 8, 9, 10	0	3121	0	0	3121	0	0	0	0	0	0	3467	0	0	3467	0	0	0	0	0	6588
% Classes 8, 9, 10	0	10.2	0	0	10.2	0	0	0	0	0	0	11	0	0	11	0	0	0	0	0	10.6
Classes 11, 12, 13	0	52	0	0	52	0	0	0	0	0	0	85	0	0	85	0	0	0	0	0	137
% Classes 11, 12, 13	0	0.2	0	0	0.2	0	0	0	0	0	0	0.3	0	0	0.3	0	0	0	0	0	0.2

DocuSign Envelope ID: 5C03745C-4B01-4834-A65D-B77F558A4F46

Quality Counts

920 Blairhill Rd, Ste B-106
Charlotte, NC 28217

File Name : 15411720 - I-26 S of Long Shoals Rd
Site Code : 15411720
Start Date : 4/20/2021
Page No : 3

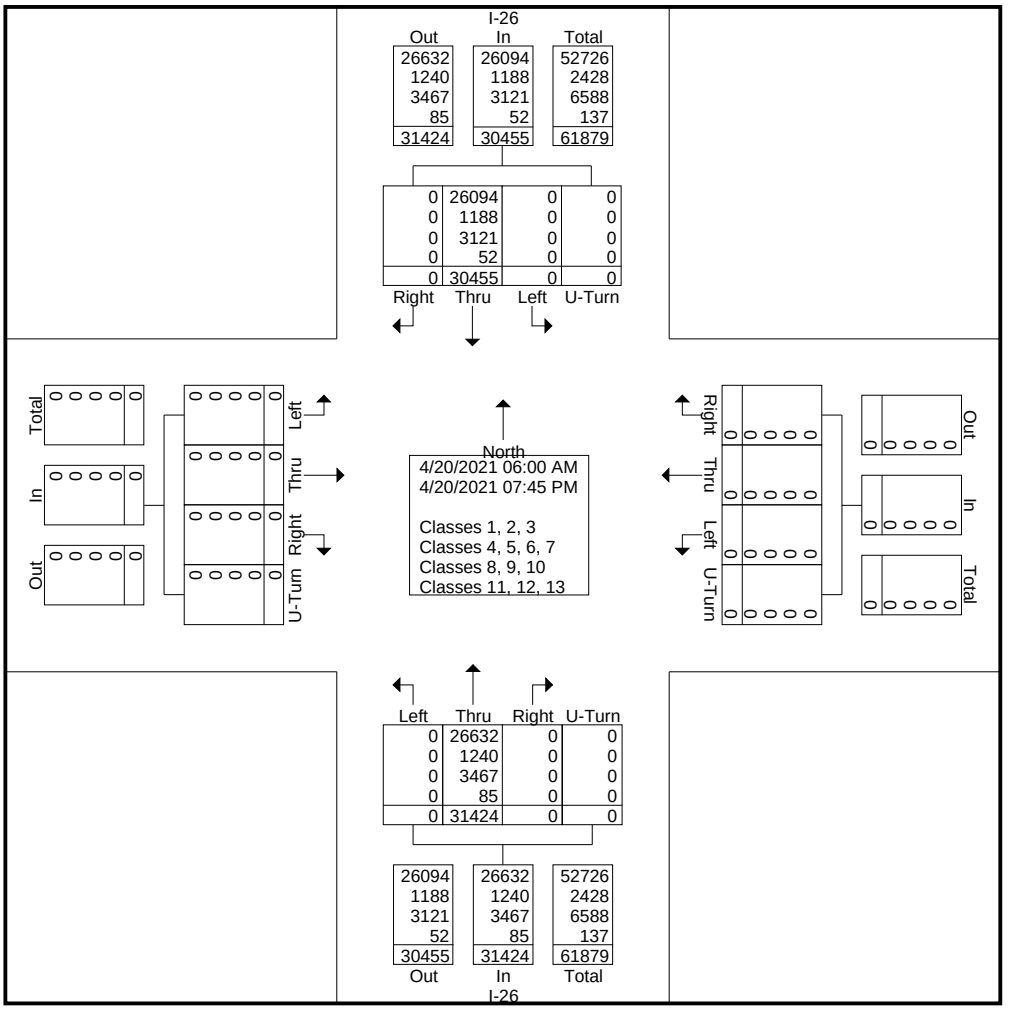

DocuSign Envelope ID: 5C03745C-4B01-4834-A65D-B77F558A4F46

Quality Counts

920 Blairhill Rd, Ste B-106
Charlotte, NC 28217

File Name : 15411720 - I-26 S of Long Shoals Rd
Site Code : 15411720
Start Date : 4/20/2021
Page No : 4

	I-26 Southbound					Westbound					I-26 Northbound					Eastbound					
Start Time	Left	Thru	Right	U-Turn	App. Total	Left	Thru	Right	U-Turn	App. Total	Left	Thru	Right	U-Turn	App. Total	Left	Thru	Right	U-Turn	App. Total	Int. Total
Peak Hour Analysis From 06:00 AM to 11:45 AM - Peak 1 of 1																					
Peak Hour for Entire Intersection Begins at 07:30 AM																					
07:30 AM	0	641	0	0	641	0	0	0	0	0	0	769	0	0	769	0	0	0	0	0	1410
07:45 AM	0	**688**	0	0	**688**	0	0	0	0	0	0	**810**	0	0	**810**	0	0	0	0	0	**1498**
08:00 AM	0	595	0	0	595	0	0	0	0	0	0	668	0	0	668	0	0	0	0	0	1263
08:15 AM	0	584	0	0	584	0	0	0	0	0	0	657	0	0	657	0	0	0	0	0	1241
Total Volume	0	2508	0	0	2508	0	0	0	0	0	0	2904	0	0	2904	0	0	0	0	0	5412
% App. Total	0	100	0	0		0	0	0	0		0	100	0	0		0	0	0	0		
PHF	.000	.911	.000	.000	.911	.000	.000	.000	.000	.000	.000	.896	.000	.000	.896	.000	.000	.000	.000	.000	.903

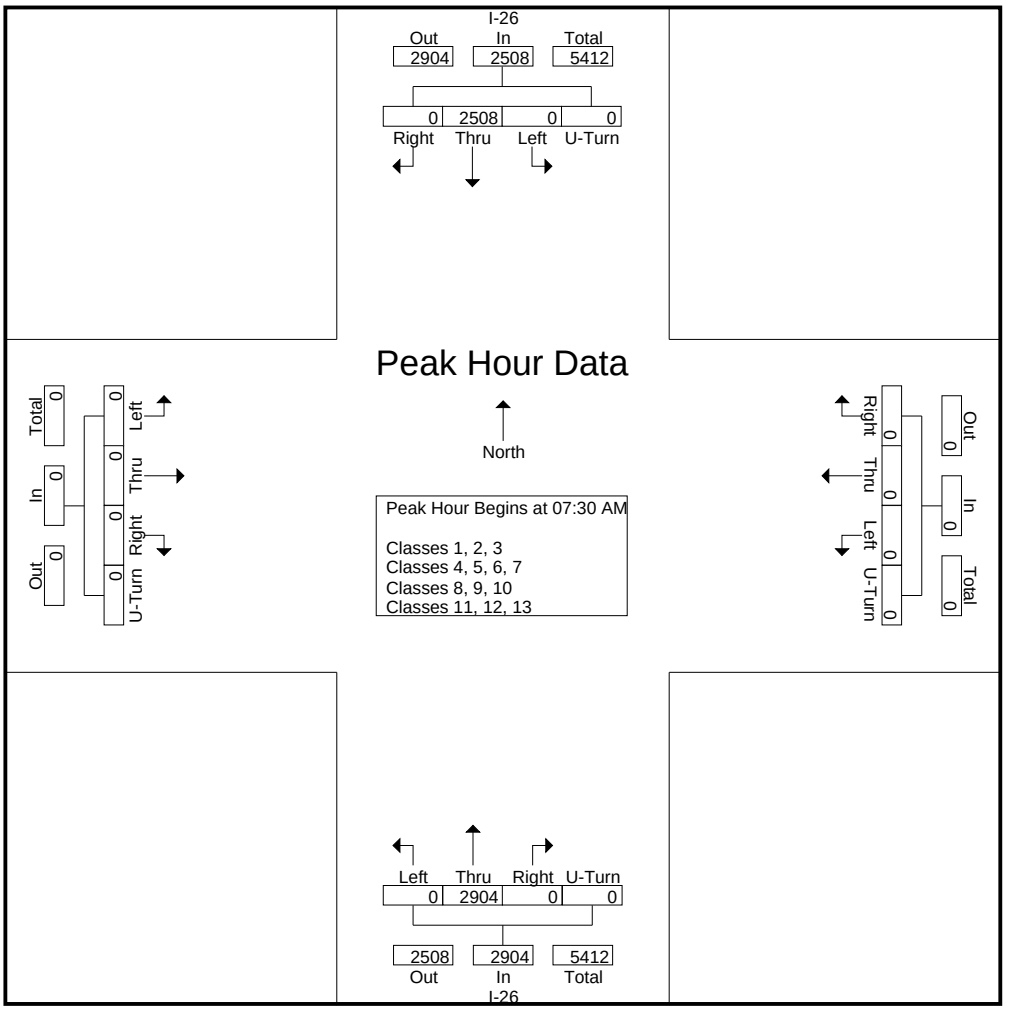

DocuSign Envelope ID: 5C03745C-4B01-4834-A65D-B77F558A4F46

Quality Counts

920 Blairhill Rd, Ste B-106
Charlotte, NC 28217

File Name : 15411720 - I-26 S of Long Shoals Rd
Site Code : 15411720
Start Date : 4/20/2021
Page No : 5

	I-26 Southbound					Westbound					I-26 Northbound					Eastbound					
Start Time	Left	Thru	Right	U-Turn	App. Total	Left	Thru	Right	U-Turn	App. Total	Left	Thru	Right	U-Turn	App. Total	Left	Thru	Right	U-Turn	App. Total	Int. Total
Peak Hour Analysis From 12:00 PM to 07:45 PM - Peak 1 of 1																					
Peak Hour for Entire Intersection Begins at 04:15 PM																					
04:15 PM	0	**790**	0	0	**790**	0	0	0	0	0	0	**667**	0	0	**667**	0	0	0	0	0	**1457**
04:30 PM	0	709	0	0	709	0	0	0	0	0	0	626	0	0	626	0	0	0	0	0	1335
04:45 PM	0	749	0	0	749	0	0	0	0	0	0	628	0	0	628	0	0	0	0	0	1377
05:00 PM	0	708	0	0	708	0	0	0	0	0	0	643	0	0	643	0	0	0	0	0	1351
Total Volume	0	2956	0	0	2956	0	0	0	0	0	0	2564	0	0	2564	0	0	0	0	0	5520
% App. Total	0	100	0	0		0	0	0	0		0	100	0	0		0	0	0	0		
PHF	.000	.935	.000	.000	.935	.000	.000	.000	.000	.000	.000	.961	.000	.000	.961	.000	.000	.000	.000	.000	.947

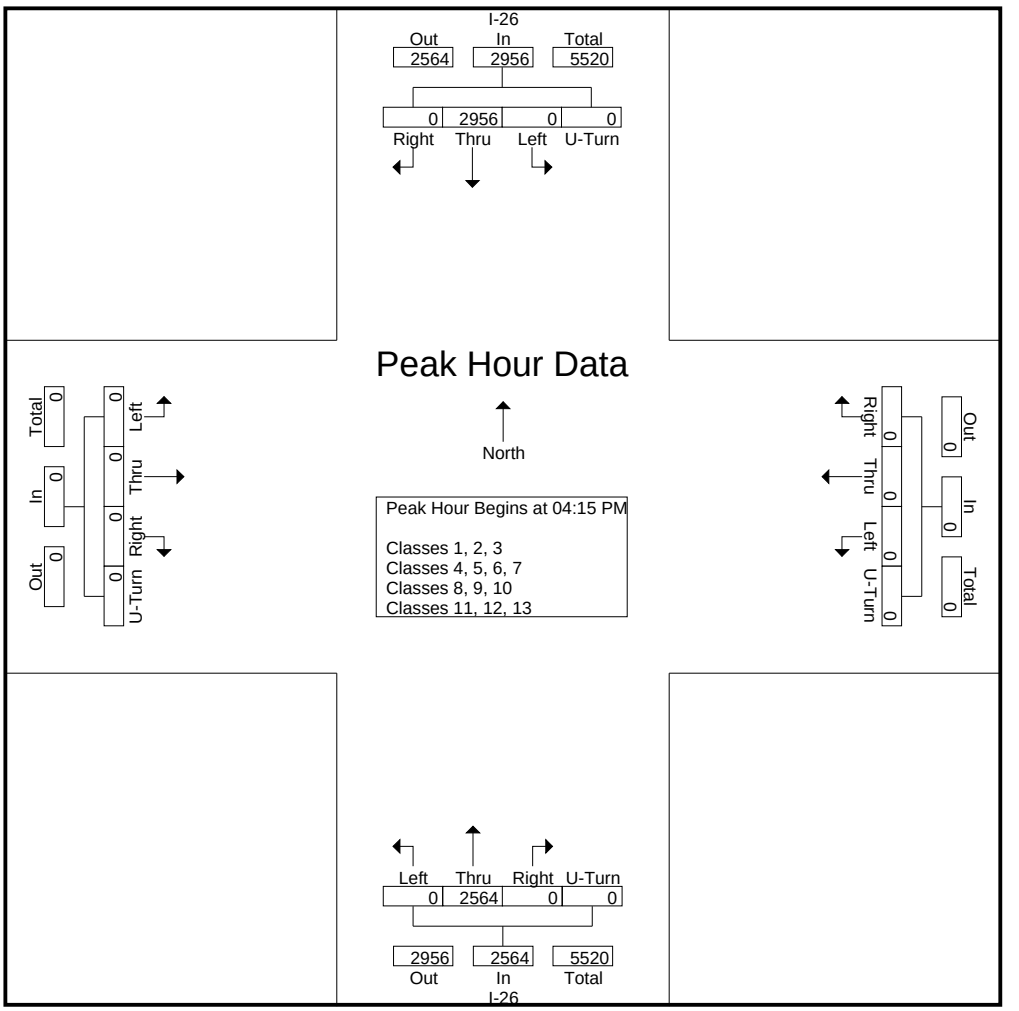

DocuSign Envelope ID: 5C03745C-4B01-4834-A65D-B77F558A4F46

Quality Counts

920 Blairhill Rd, Ste B-106
Charlotte, NC 28217

File Name : 15411720 - I-26 S of Long Shoals Rd
Site Code : 15411720
Start Date : 4/20/2021
Page No : 1

Groups Printed- Classes 1, 2, 3

	I-26 Southbound					Westbound					I-26 Northbound					Eastbound					
Start Time	Left	Thru	Right	U-Turn	App. Total	Left	Thru	Right	U-Turn	App. Total	Left	Thru	Right	U-Turn	App. Total	Left	Thru	Right	U-Turn	App. Total	Int. Total
06:00 AM	0	189	0	0	189	0	0	0	0	0	0	181	0	0	181	0	0	0	0	0	370
06:15 AM	0	314	0	0	314	0	0	0	0	0	0	268	0	0	268	0	0	0	0	0	582
06:30 AM	0	384	0	0	384	0	0	0	0	0	0	395	0	0	395	0	0	0	0	0	779
06:45 AM	0	390	0	0	390	0	0	0	0	0	0	431	0	0	431	0	0	0	0	0	821
Total	0	1277	0	0	1277	0	0	0	0	0	0	1275	0	0	1275	0	0	0	0	0	2552
07:00 AM	0	380	0	0	380	0	0	0	0	0	0	472	0	0	472	0	0	0	0	0	852
07:15 AM	0	446	0	0	446	0	0	0	0	0	0	634	0	0	634	0	0	0	0	0	1080
07:30 AM	0	578	0	0	578	0	0	0	0	0	0	680	0	0	680	0	0	0	0	0	1258
07:45 AM	0	616	0	0	616	0	0	0	0	0	0	716	0	0	716	0	0	0	0	0	1332
Total	0	2020	0	0	2020	0	0	0	0	0	0	2502	0	0	2502	0	0	0	0	0	4522
08:00 AM	0	511	0	0	511	0	0	0	0	0	0	594	0	0	594	0	0	0	0	0	1105
08:15 AM	0	502	0	0	502	0	0	0	0	0	0	548	0	0	548	0	0	0	0	0	1050
08:30 AM	0	503	0	0	503	0	0	0	0	0	0	523	0	0	523	0	0	0	0	0	1026
08:45 AM	0	533	0	0	533	0	0	0	0	0	0	493	0	0	493	0	0	0	0	0	1026
Total	0	2049	0	0	2049	0	0	0	0	0	0	2158	0	0	2158	0	0	0	0	0	4207
09:00 AM	0	459	0	0	459	0	0	0	0	0	0	447	0	0	447	0	0	0	0	0	906
09:15 AM	0	469	0	0	469	0	0	0	0	0	0	449	0	0	449	0	0	0	0	0	918
09:30 AM	0	482	0	0	482	0	0	0	0	0	0	452	0	0	452	0	0	0	0	0	934
09:45 AM	0	454	0	0	454	0	0	0	0	0	0	431	0	0	431	0	0	0	0	0	885
Total	0	1864	0	0	1864	0	0	0	0	0	0	1779	0	0	1779	0	0	0	0	0	3643
10:00 AM	0	434	0	0	434	0	0	0	0	0	0	422	0	0	422	0	0	0	0	0	856
10:15 AM	0	414	0	0	414	0	0	0	0	0	0	468	0	0	468	0	0	0	0	0	882
10:30 AM	0	446	0	0	446	0	0	0	0	0	0	486	0	0	486	0	0	0	0	0	932
10:45 AM	0	387	0	0	387	0	0	0	0	0	0	454	0	0	454	0	0	0	0	0	841
Total	0	1681	0	0	1681	0	0	0	0	0	0	1830	0	0	1830	0	0	0	0	0	3511
11:00 AM	0	451	0	0	451	0	0	0	0	0	0	420	0	0	420	0	0	0	0	0	871
11:15 AM	0	431	0	0	431	0	0	0	0	0	0	477	0	0	477	0	0	0	0	0	908
11:30 AM	0	472	0	0	472	0	0	0	0	0	0	449	0	0	449	0	0	0	0	0	921
11:45 AM	0	435	0	0	435	0	0	0	0	0	0	471	0	0	471	0	0	0	0	0	906
Total	0	1789	0	0	1789	0	0	0	0	0	0	1817	0	0	1817	0	0	0	0	0	3606
12:00 PM	0	489	0	0	489	0	0	0	0	0	0	417	0	0	417	0	0	0	0	0	906
12:15 PM	0	505	0	0	505	0	0	0	0	0	0	476	0	0	476	0	0	0	0	0	981
12:30 PM	0	447	0	0	447	0	0	0	0	0	0	490	0	0	490	0	0	0	0	0	937
12:45 PM	0	416	0	0	416	0	0	0	0	0	0	442	0	0	442	0	0	0	0	0	858
Total	0	1857	0	0	1857	0	0	0	0	0	0	1825	0	0	1825	0	0	0	0	0	3682
01:00 PM	0	461	0	0	461	0	0	0	0	0	0	482	0	0	482	0	0	0	0	0	943
01:15 PM	0	449	0	0	449	0	0	0	0	0	0	471	0	0	471	0	0	0	0	0	920
01:30 PM	0	467	0	0	467	0	0	0	0	0	0	523	0	0	523	0	0	0	0	0	990
01:45 PM	0	450	0	0	450	0	0	0	0	0	0	499	0	0	499	0	0	0	0	0	949
Total	0	1827	0	0	1827	0	0	0	0	0	0	1975	0	0	1975	0	0	0	0	0	3802
02:00 PM	0	447	0	0	447	0	0	0	0	0	0	504	0	0	504	0	0	0	0	0	951
02:15 PM	0	510	0	0	510	0	0	0	0	0	0	540	0	0	540	0	0	0	0	0	1050
02:30 PM	0	458	0	0	458	0	0	0	0	0	0	522	0	0	522	0	0	0	0	0	980
02:45 PM	0	483	0	0	483	0	0	0	0	0	0	500	0	0	500	0	0	0	0	0	983
Total	0	1898	0	0	1898	0	0	0	0	0	0	2066	0	0	2066	0	0	0	0	0	3964
03:00 PM	0	519	0	0	519	0	0	0	0	0	0	539	0	0	539	0	0	0	0	0	1058
03:15 PM	0	560	0	0	560	0	0	0	0	0	0	611	0	0	611	0	0	0	0	0	1171
03:30 PM	0	461	0	0	461	0	0	0	0	0	0	595	0	0	595	0	0	0	0	0	1056

DocuSign Envelope ID: 5C03745C-4B01-4834-A65D-B77F558A4F46

Quality Counts

920 Blairhill Rd, Ste B-106
Charlotte, NC 28217

File Name : 15411720 - I-26 S of Long Shoals Rd
Site Code : 15411720
Start Date : 4/20/2021
Page No : 2

Groups Printed- Classes 1, 2, 3

	I-26 Southbound					Westbound					I-26 Northbound					Eastbound					
Start Time	Left	Thru	Right	U-Turn	App. Total	Left	Thru	Right	U-Turn	App. Total	Left	Thru	Right	U-Turn	App. Total	Left	Thru	Right	U-Turn	App. Total	Int. Total
03:45 PM	0	626	0	0	626	0	0	0	0	0	0	596	0	0	596	0	0	0	0	0	1222
Total	0	2166	0	0	2166	0	0	0	0	0	0	2341	0	0	2341	0	0	0	0	0	4507
04:00 PM	0	500	0	0	500	0	0	0	0	0	0	597	0	0	597	0	0	0	0	0	1097
04:15 PM	0	698	0	0	698	0	0	0	0	0	0	574	0	0	574	0	0	0	0	0	1272
04:30 PM	0	618	0	0	618	0	0	0	0	0	0	530	0	0	530	0	0	0	0	0	1148
04:45 PM	0	678	0	0	678	0	0	0	0	0	0	549	0	0	549	0	0	0	0	0	1227
Total	0	2494	0	0	2494	0	0	0	0	0	0	2250	0	0	2250	0	0	0	0	0	4744
05:00 PM	0	636	0	0	636	0	0	0	0	0	0	551	0	0	551	0	0	0	0	0	1187
05:15 PM	0	719	0	0	719	0	0	0	0	0	0	556	0	0	556	0	0	0	0	0	1275
05:30 PM	0	642	0	0	642	0	0	0	0	0	0	545	0	0	545	0	0	0	0	0	1187
05:45 PM	0	541	0	0	541	0	0	0	0	0	0	523	0	0	523	0	0	0	0	0	1064
Total	0	2538	0	0	2538	0	0	0	0	0	0	2175	0	0	2175	0	0	0	0	0	4713
06:00 PM	0	488	0	0	488	0	0	0	0	0	0	478	0	0	478	0	0	0	0	0	966
06:15 PM	0	488	0	0	488	0	0	0	0	0	0	476	0	0	476	0	0	0	0	0	964
06:30 PM	0	416	0	0	416	0	0	0	0	0	0	377	0	0	377	0	0	0	0	0	793
06:45 PM	0	368	0	0	368	0	0	0	0	0	0	320	0	0	320	0	0	0	0	0	688
Total	0	1760	0	0	1760	0	0	0	0	0	0	1651	0	0	1651	0	0	0	0	0	3411
07:00 PM	0	160	0	0	160	0	0	0	0	0	0	169	0	0	169	0	0	0	0	0	329
07:15 PM	0	242	0	0	242	0	0	0	0	0	0	292	0	0	292	0	0	0	0	0	534
07:30 PM	0	210	0	0	210	0	0	0	0	0	0	266	0	0	266	0	0	0	0	0	476
07:45 PM	0	262	0	0	262	0	0	0	0	0	0	261	0	0	261	0	0	0	0	0	523
Total	0	874	0	0	874	0	0	0	0	0	0	988	0	0	988	0	0	0	0	0	1862
Grand Total	0	26094	0	0	26094	0	0	0	0	0	0	26632	0	0	26632	0	0	0	0	0	52726
Apprch %	0	100	0	0		0	0	0	0		0	100	0	0		0	0	0	0		
Total %	0	49.5	0	0	49.5	0	0	0	0	0	0	50.5	0	0	50.5	0	0	0	0	0	

DocuSign Envelope ID: 5C03745C-4B01-4834-A65D-B77F558A4F46

Quality Counts

920 Blairhill Rd, Ste B-106
Charlotte, NC 28217

File Name : 15411720 - I-26 S of Long Shoals Rd
Site Code : 15411720
Start Date : 4/20/2021
Page No : 3

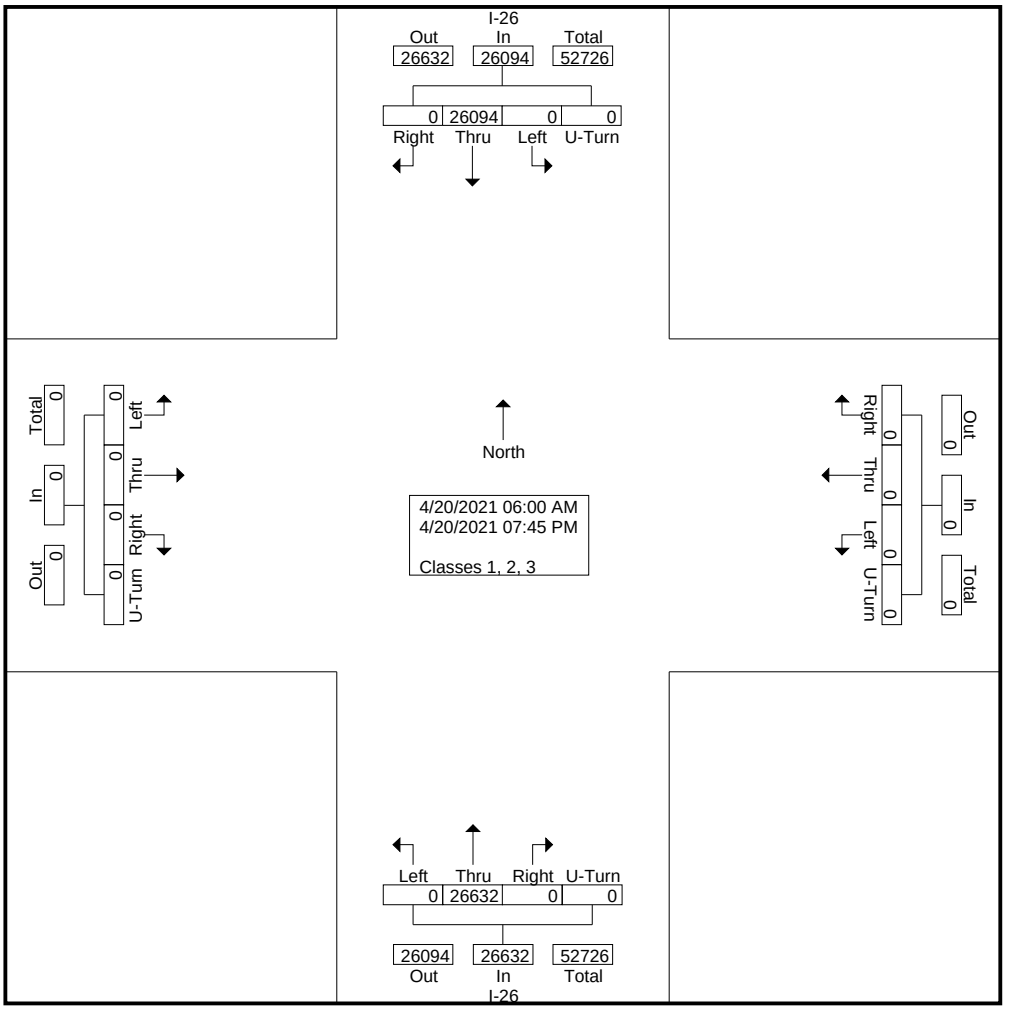

DocuSign Envelope ID: 5C03745C-4B01-4834-A65D-B77F558A4F46

Quality Counts

920 Blairhill Rd, Ste B-106
Charlotte, NC 28217

File Name : 15411720 - I-26 S of Long Shoals Rd
Site Code : 15411720
Start Date : 4/20/2021
Page No : 4

	I-26 Southbound					Westbound					I-26 Northbound					Eastbound					
Start Time	Left	Thru	Right	U-Turn	App. Total	Left	Thru	Right	U-Turn	App. Total	Left	Thru	Right	U-Turn	App. Total	Left	Thru	Right	U-Turn	App. Total	Int. Total
Peak Hour Analysis From 06:00 AM to 11:45 AM - Peak 1 of 1																					
Peak Hour for Entire Intersection Begins at 07:15 AM																					
07:15 AM	0	446	0	0	446	0	0	0	0	0	0	634	0	0	634	0	0	0	0	0	1080
07:30 AM	0	578	0	0	578	0	0	0	0	0	0	680	0	0	680	0	0	0	0	0	1258
07:45 AM	0	**616**	0	0	**616**	0	0	0	0	0	0	**716**	0	0	**716**	0	0	0	0	0	**1332**
08:00 AM	0	511	0	0	511	0	0	0	0	0	0	594	0	0	594	0	0	0	0	0	1105
Total Volume	0	2151	0	0	2151	0	0	0	0	0	0	2624	0	0	2624	0	0	0	0	0	4775
% App. Total	0	100	0	0		0	0	0	0		0	100	0	0		0	0	0	0		
PHF	.000	.873	.000	.000	.873	.000	.000	.000	.000	.000	.000	.916	.000	.000	.916	.000	.000	.000	.000	.000	.896

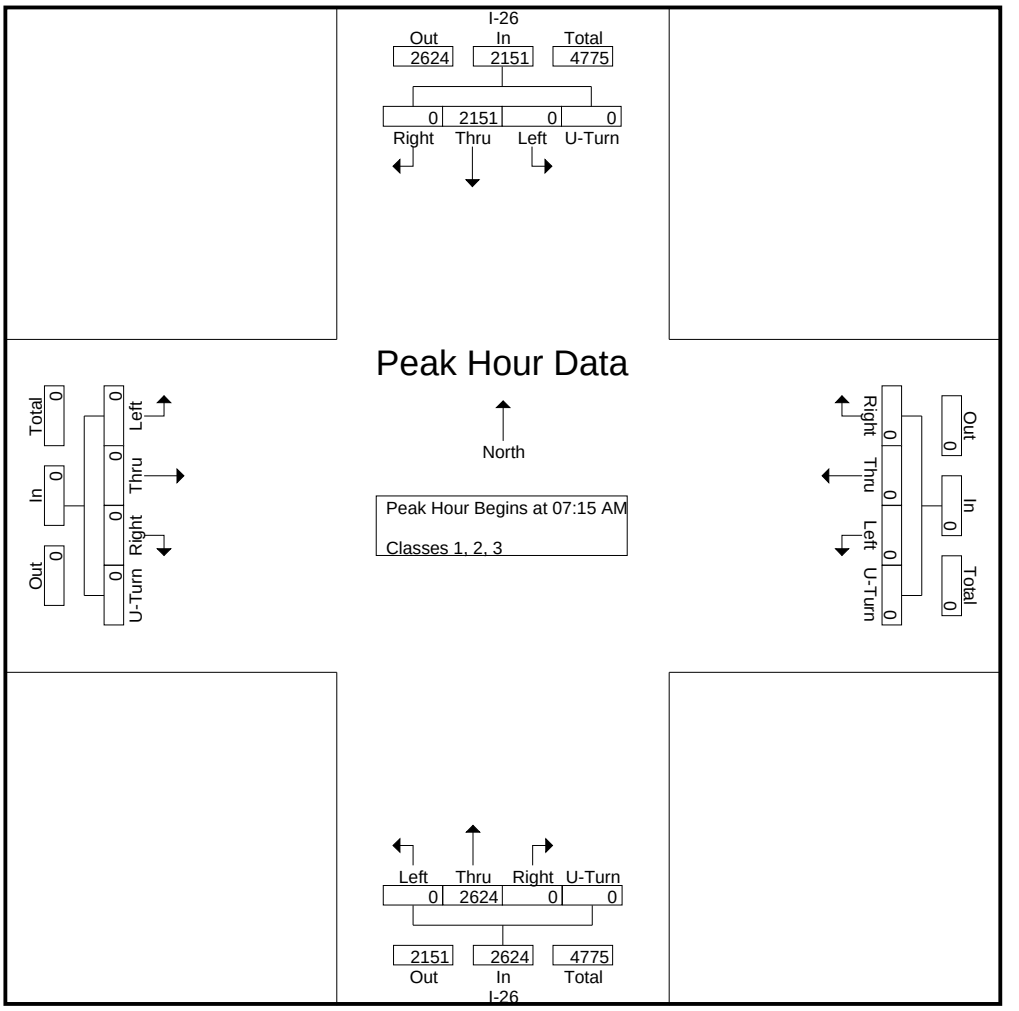

DocuSign Envelope ID: 5C03745C-4B01-4834-A65D-B77F558A4F46

Quality Counts

920 Blairhill Rd, Ste B-106
Charlotte, NC 28217

File Name : 15411720 - I-26 S of Long Shoals Rd
Site Code : 15411720
Start Date : 4/20/2021
Page No : 5

	I-26 Southbound					Westbound					I-26 Northbound					Eastbound					
Start Time	Left	Thru	Right	U-Turn	App. Total	Left	Thru	Right	U-Turn	App. Total	Left	Thru	Right	U-Turn	App. Total	Left	Thru	Right	U-Turn	App. Total	Int. Total
Peak Hour Analysis From 12:00 PM to 07:45 PM - Peak 1 of 1																					
Peak Hour for Entire Intersection Begins at 04:45 PM																					
04:45 PM	0	678	0	0	678	0	0	0	0	0	0	549	0	0	549	0	0	0	0	0	1227
05:00 PM	0	636	0	0	636	0	0	0	0	0	0	551	0	0	551	0	0	0	0	0	1187
05:15 PM	0	**719**	0	0	**719**	0	0	0	0	0	0	**556**	0	0	**556**	0	0	0	0	0	**1275**
05:30 PM	0	642	0	0	642	0	0	0	0	0	0	545	0	0	545	0	0	0	0	0	1187
Total Volume	0	2675	0	0	2675	0	0	0	0	0	0	2201	0	0	2201	0	0	0	0	0	4876
% App. Total	0	100	0	0		0	0	0	0		0	100	0	0		0	0	0	0		
PHF	.000	.930	.000	.000	.930	.000	.000	.000	.000	.000	.000	.990	.000	.000	.990	.000	.000	.000	.000	.000	.956

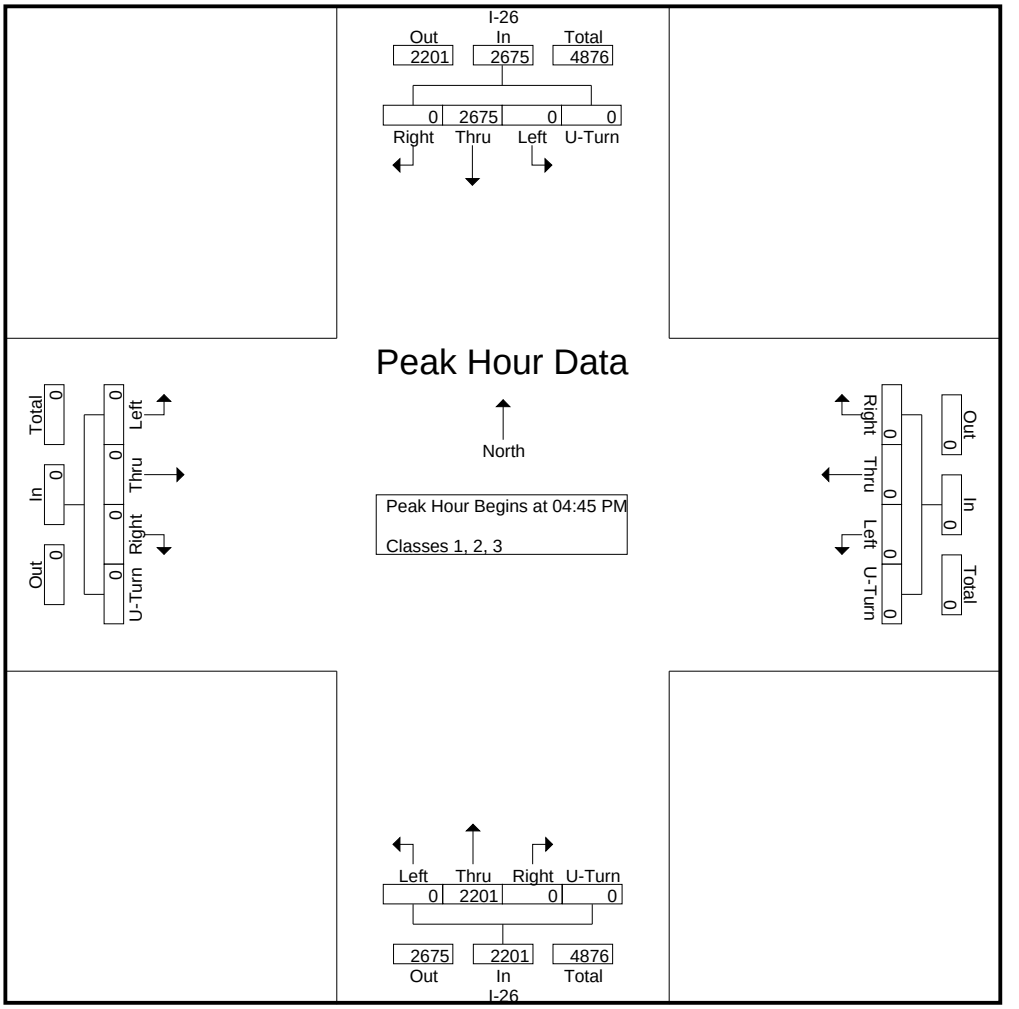

DocuSign Envelope ID: 5C03745C-4B01-4834-A65D-B77F558A4F46

Quality Counts

920 Blairhill Rd, Ste B-106
Charlotte, NC 28217

File Name : 15411720 - I-26 S of Long Shoals Rd
Site Code : 15411720
Start Date : 4/20/2021
Page No : 1

Groups Printed- Classes 4, 5, 6, 7

	I-26 Southbound					Westbound					I-26 Northbound					Eastbound					
Start Time	Left	Thru	Right	U-Turn	App. Total	Left	Thru	Right	U-Turn	App. Total	Left	Thru	Right	U-Turn	App. Total	Left	Thru	Right	U-Turn	App. Total	Int. Total
06:00 AM	0	9	0	0	9	0	0	0	0	0	0	5	0	0	5	0	0	0	0	0	14
06:15 AM	0	11	0	0	11	0	0	0	0	0	0	9	0	0	9	0	0	0	0	0	20
06:30 AM	0	23	0	0	23	0	0	0	0	0	0	16	0	0	16	0	0	0	0	0	39
06:45 AM	0	19	0	0	19	0	0	0	0	0	0	10	0	0	10	0	0	0	0	0	29
Total	0	62	0	0	62	0	0	0	0	0	0	40	0	0	40	0	0	0	0	0	102
07:00 AM	0	21	0	0	21	0	0	0	0	0	0	15	0	0	15	0	0	0	0	0	36
07:15 AM	0	20	0	0	20	0	0	0	0	0	0	19	0	0	19	0	0	0	0	0	39
07:30 AM	0	22	0	0	22	0	0	0	0	0	0	32	0	0	32	0	0	0	0	0	54
07:45 AM	0	25	0	0	25	0	0	0	0	0	0	26	0	0	26	0	0	0	0	0	51
Total	0	88	0	0	88	0	0	0	0	0	0	92	0	0	92	0	0	0	0	0	180
08:00 AM	0	22	0	0	22	0	0	0	0	0	0	23	0	0	23	0	0	0	0	0	45
08:15 AM	0	20	0	0	20	0	0	0	0	0	0	43	0	0	43	0	0	0	0	0	63
08:30 AM	0	19	0	0	19	0	0	0	0	0	0	45	0	0	45	0	0	0	0	0	64
08:45 AM	0	27	0	0	27	0	0	0	0	0	0	35	0	0	35	0	0	0	0	0	62
Total	0	88	0	0	88	0	0	0	0	0	0	146	0	0	146	0	0	0	0	0	234
09:00 AM	0	17	0	0	17	0	0	0	0	0	0	28	0	0	28	0	0	0	0	0	45
09:15 AM	0	18	0	0	18	0	0	0	0	0	0	32	0	0	32	0	0	0	0	0	50
09:30 AM	0	23	0	0	23	0	0	0	0	0	0	31	0	0	31	0	0	0	0	0	54
09:45 AM	0	29	0	0	29	0	0	0	0	0	0	34	0	0	34	0	0	0	0	0	63
Total	0	87	0	0	87	0	0	0	0	0	0	125	0	0	125	0	0	0	0	0	212
10:00 AM	0	24	0	0	24	0	0	0	0	0	0	33	0	0	33	0	0	0	0	0	57
10:15 AM	0	22	0	0	22	0	0	0	0	0	0	27	0	0	27	0	0	0	0	0	49
10:30 AM	0	28	0	0	28	0	0	0	0	0	0	21	0	0	21	0	0	0	0	0	49
10:45 AM	0	30	0	0	30	0	0	0	0	0	0	20	0	0	20	0	0	0	0	0	50
Total	0	104	0	0	104	0	0	0	0	0	0	101	0	0	101	0	0	0	0	0	205
11:00 AM	0	21	0	0	21	0	0	0	0	0	0	22	0	0	22	0	0	0	0	0	43
11:15 AM	0	27	0	0	27	0	0	0	0	0	0	35	0	0	35	0	0	0	0	0	62
11:30 AM	0	21	0	0	21	0	0	0	0	0	0	38	0	0	38	0	0	0	0	0	59
11:45 AM	0	25	0	0	25	0	0	0	0	0	0	21	0	0	21	0	0	0	0	0	46
Total	0	94	0	0	94	0	0	0	0	0	0	116	0	0	116	0	0	0	0	0	210
12:00 PM	0	21	0	0	21	0	0	0	0	0	0	30	0	0	30	0	0	0	0	0	51
12:15 PM	0	34	0	0	34	0	0	0	0	0	0	26	0	0	26	0	0	0	0	0	60
12:30 PM	0	32	0	0	32	0	0	0	0	0	0	23	0	0	23	0	0	0	0	0	55
12:45 PM	0	26	0	0	26	0	0	0	0	0	0	21	0	0	21	0	0	0	0	0	47
Total	0	113	0	0	113	0	0	0	0	0	0	100	0	0	100	0	0	0	0	0	213
01:00 PM	0	25	0	0	25	0	0	0	0	0	0	24	0	0	24	0	0	0	0	0	49
01:15 PM	0	29	0	0	29	0	0	0	0	0	0	28	0	0	28	0	0	0	0	0	57
01:30 PM	0	22	0	0	22	0	0	0	0	0	0	26	0	0	26	0	0	0	0	0	48
01:45 PM	0	28	0	0	28	0	0	0	0	0	0	28	0	0	28	0	0	0	0	0	56
Total	0	104	0	0	104	0	0	0	0	0	0	106	0	0	106	0	0	0	0	0	210
02:00 PM	0	21	0	0	21	0	0	0	0	0	0	29	0	0	29	0	0	0	0	0	50
02:15 PM	0	40	0	0	40	0	0	0	0	0	0	28	0	0	28	0	0	0	0	0	68
02:30 PM	0	26	0	0	26	0	0	0	0	0	0	37	0	0	37	0	0	0	0	0	63
02:45 PM	0	32	0	0	32	0	0	0	0	0	0	31	0	0	31	0	0	0	0	0	63
Total	0	119	0	0	119	0	0	0	0	0	0	125	0	0	125	0	0	0	0	0	244
03:00 PM	0	31	0	0	31	0	0	0	0	0	0	23	0	0	23	0	0	0	0	0	54
03:15 PM	0	28	0	0	28	0	0	0	0	0	0	22	0	0	22	0	0	0	0	0	50
03:30 PM	0	32	0	0	32	0	0	0	0	0	0	19	0	0	19	0	0	0	0	0	51

DocuSign Envelope ID: 5C03745C-4B01-4834-A65D-B77F558A4F46

Quality Counts

920 Blairhill Rd, Ste B-106
Charlotte, NC 28217

File Name : 15411720 - I-26 S of Long Shoals Rd
Site Code : 15411720
Start Date : 4/20/2021
Page No : 2

Groups Printed- Classes 4, 5, 6, 7

	I-26 Southbound					Westbound					I-26 Northbound					Eastbound					
Start Time	Left	Thru	Right	U-Turn	App. Total	Left	Thru	Right	U-Turn	App. Total	Left	Thru	Right	U-Turn	App. Total	Left	Thru	Right	U-Turn	App. Total	Int. Total
03:45 PM	0	24	0	0	24	0	0	0	0	0	0	27	0	0	27	0	0	0	0	0	51
Total	0	115	0	0	115	0	0	0	0	0	0	91	0	0	91	0	0	0	0	0	206
04:00 PM	0	18	0	0	18	0	0	0	0	0	0	17	0	0	17	0	0	0	0	0	35
04:15 PM	0	24	0	0	24	0	0	0	0	0	0	23	0	0	23	0	0	0	0	0	47
04:30 PM	0	26	0	0	26	0	0	0	0	0	0	20	0	0	20	0	0	0	0	0	46
04:45 PM	0	17	0	0	17	0	0	0	0	0	0	15	0	0	15	0	0	0	0	0	32
Total	0	85	0	0	85	0	0	0	0	0	0	75	0	0	75	0	0	0	0	0	160
05:00 PM	0	20	0	0	20	0	0	0	0	0	0	16	0	0	16	0	0	0	0	0	36
05:15 PM	0	14	0	0	14	0	0	0	0	0	0	13	0	0	13	0	0	0	0	0	27
05:30 PM	0	11	0	0	11	0	0	0	0	0	0	10	0	0	10	0	0	0	0	0	21
05:45 PM	0	13	0	0	13	0	0	0	0	0	0	12	0	0	12	0	0	0	0	0	25
Total	0	58	0	0	58	0	0	0	0	0	0	51	0	0	51	0	0	0	0	0	109
06:00 PM	0	16	0	0	16	0	0	0	0	0	0	20	0	0	20	0	0	0	0	0	36
06:15 PM	0	16	0	0	16	0	0	0	0	0	0	14	0	0	14	0	0	0	0	0	30
06:30 PM	0	10	0	0	10	0	0	0	0	0	0	11	0	0	11	0	0	0	0	0	21
06:45 PM	0	14	0	0	14	0	0	0	0	0	0	8	0	0	8	0	0	0	0	0	22
Total	0	56	0	0	56	0	0	0	0	0	0	53	0	0	53	0	0	0	0	0	109
07:00 PM	0	3	0	0	3	0	0	0	0	0	0	2	0	0	2	0	0	0	0	0	5
07:15 PM	0	2	0	0	2	0	0	0	0	0	0	8	0	0	8	0	0	0	0	0	10
07:30 PM	0	3	0	0	3	0	0	0	0	0	0	5	0	0	5	0	0	0	0	0	8
07:45 PM	0	7	0	0	7	0	0	0	0	0	0	4	0	0	4	0	0	0	0	0	11
Total	0	15	0	0	15	0	0	0	0	0	0	19	0	0	19	0	0	0	0	0	34
Grand Total	0	1188	0	0	1188	0	0	0	0	0	0	1240	0	0	1240	0	0	0	0	0	2428
Apprch %	0	100	0	0		0	0	0	0		0	100	0	0		0	0	0	0		
Total %	0	48.9	0	0	48.9	0	0	0	0	0	0	51.1	0	0	51.1	0	0	0	0	0	

DocuSign Envelope ID: 5C03745C-4B01-4834-A65D-B77F558A4F46

Quality Counts

920 Blairhill Rd, Ste B-106
Charlotte, NC 28217

File Name : 15411720 - I-26 S of Long Shoals Rd
Site Code : 15411720
Start Date : 4/20/2021
Page No : 3

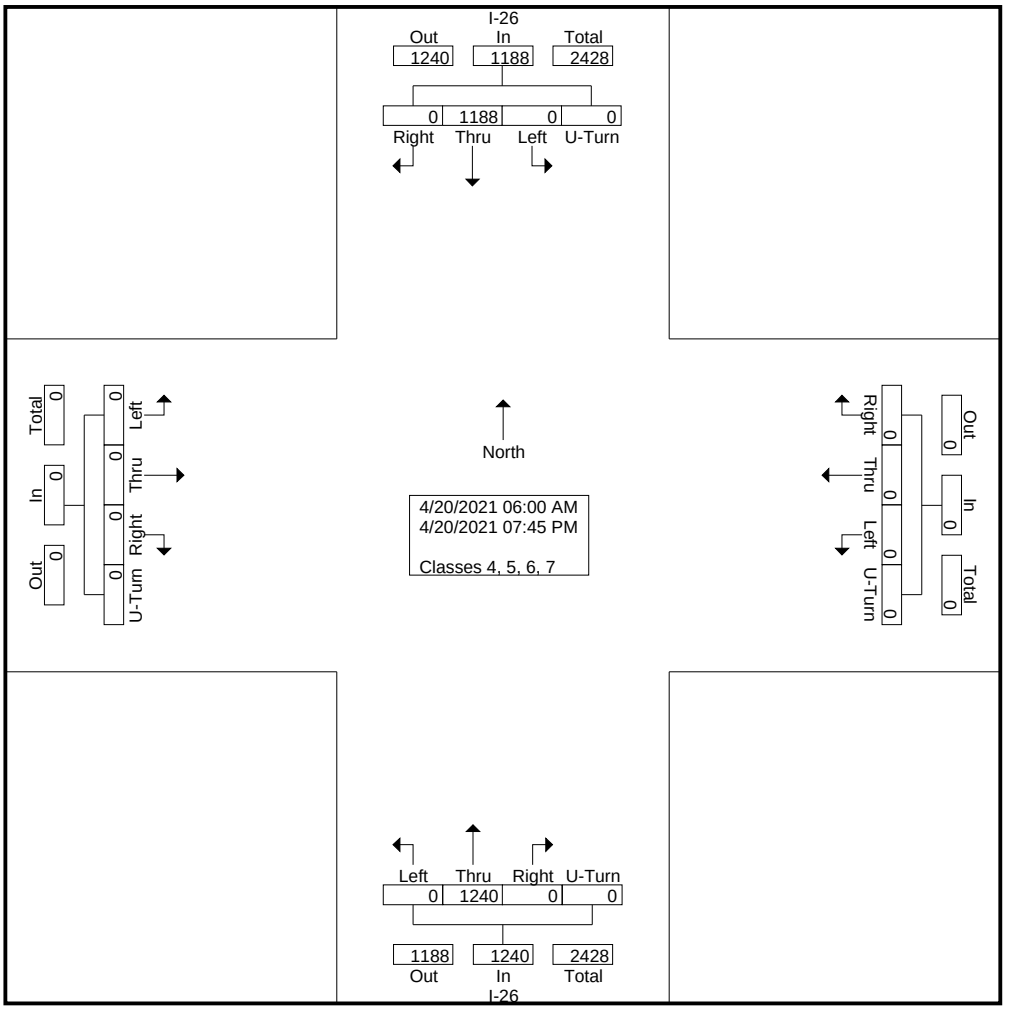

DocuSign Envelope ID: 5C03745C-4B01-4834-A65D-B77F558A4F46

Quality Counts

920 Blairhill Rd, Ste B-106
Charlotte, NC 28217

File Name : 15411720 - I-26 S of Long Shoals Rd
Site Code : 15411720
Start Date : 4/20/2021
Page No : 4

	I-26 Southbound					Westbound					I-26 Northbound					Eastbound					
Start Time	Left	Thru	Right	U-Turn	App. Total	Left	Thru	Right	U-Turn	App. Total	Left	Thru	Right	U-Turn	App. Total	Left	Thru	Right	U-Turn	App. Total	Int. Total
Peak Hour Analysis From 06:00 AM to 11:45 AM - Peak 1 of 1																					
Peak Hour for Entire Intersection Begins at 08:00 AM																					
08:00 AM	0	22	0	0	22	0	0	0	0	0	0	23	0	0	23	0	0	0	0	0	45
08:15 AM	0	20	0	0	20	0	0	0	0	0	0	43	0	0	43	0	0	0	0	0	63
08:30 AM	0	19	0	0	19	0	0	0	0	0	0	**45**	0	0	**45**	0	0	0	0	0	**64**
08:45 AM	0	**27**	0	0	**27**	0	0	0	0	0	0	35	0	0	35	0	0	0	0	0	62
Total Volume	0	88	0	0	88	0	0	0	0	0	0	146	0	0	146	0	0	0	0	0	234
% App. Total	0	100	0	0		0	0	0	0		0	100	0	0		0	0	0	0		
PHF	.000	.815	.000	.000	.815	.000	.000	.000	.000	.000	.000	.811	.000	.000	.811	.000	.000	.000	.000	.000	.914

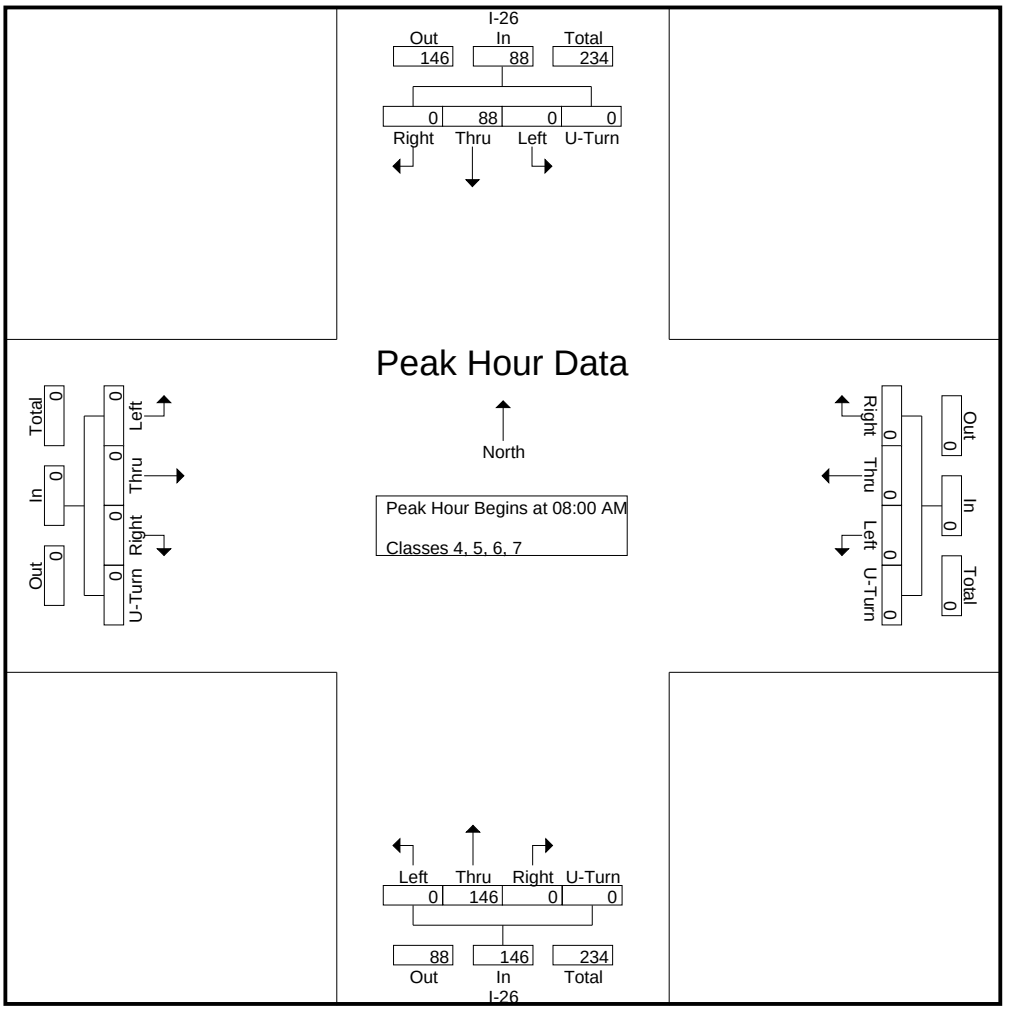

DocuSign Envelope ID: 5C03745C-4B01-4834-A65D-B77F558A4F46

Quality Counts

920 Blairhill Rd, Ste B-106
Charlotte, NC 28217

File Name : 15411720 - I-26 S of Long Shoals Rd
Site Code : 15411720
Start Date : 4/20/2021
Page No : 5

	I-26 Southbound					Westbound					I-26 Northbound					Eastbound					
Start Time	Left	Thru	Right	U-Turn	App. Total	Left	Thru	Right	U-Turn	App. Total	Left	Thru	Right	U-Turn	App. Total	Left	Thru	Right	U-Turn	App. Total	Int. Total
Peak Hour Analysis From 12:00 PM to 07:45 PM - Peak 1 of 1																					
Peak Hour for Entire Intersection Begins at 02:15 PM																					
02:15 PM	0	**40**	0	0	**40**	0	0	0	0	0	0	28	0	0	28	0	0	0	0	0	**68**
02:30 PM	0	26	0	0	26	0	0	0	0	0	0	**37**	0	0	**37**	0	0	0	0	0	63
02:45 PM	0	32	0	0	32	0	0	0	0	0	0	31	0	0	31	0	0	0	0	0	63
03:00 PM	0	31	0	0	31	0	0	0	0	0	0	23	0	0	23	0	0	0	0	0	54
Total Volume	0	129	0	0	129	0	0	0	0	0	0	119	0	0	119	0	0	0	0	0	248
% App. Total	0	100	0	0		0	0	0	0		0	100	0	0		0	0	0	0		
PHF	.000	.806	.000	.000	.806	.000	.000	.000	.000	.000	.000	.804	.000	.000	.804	.000	.000	.000	.000	.000	.912

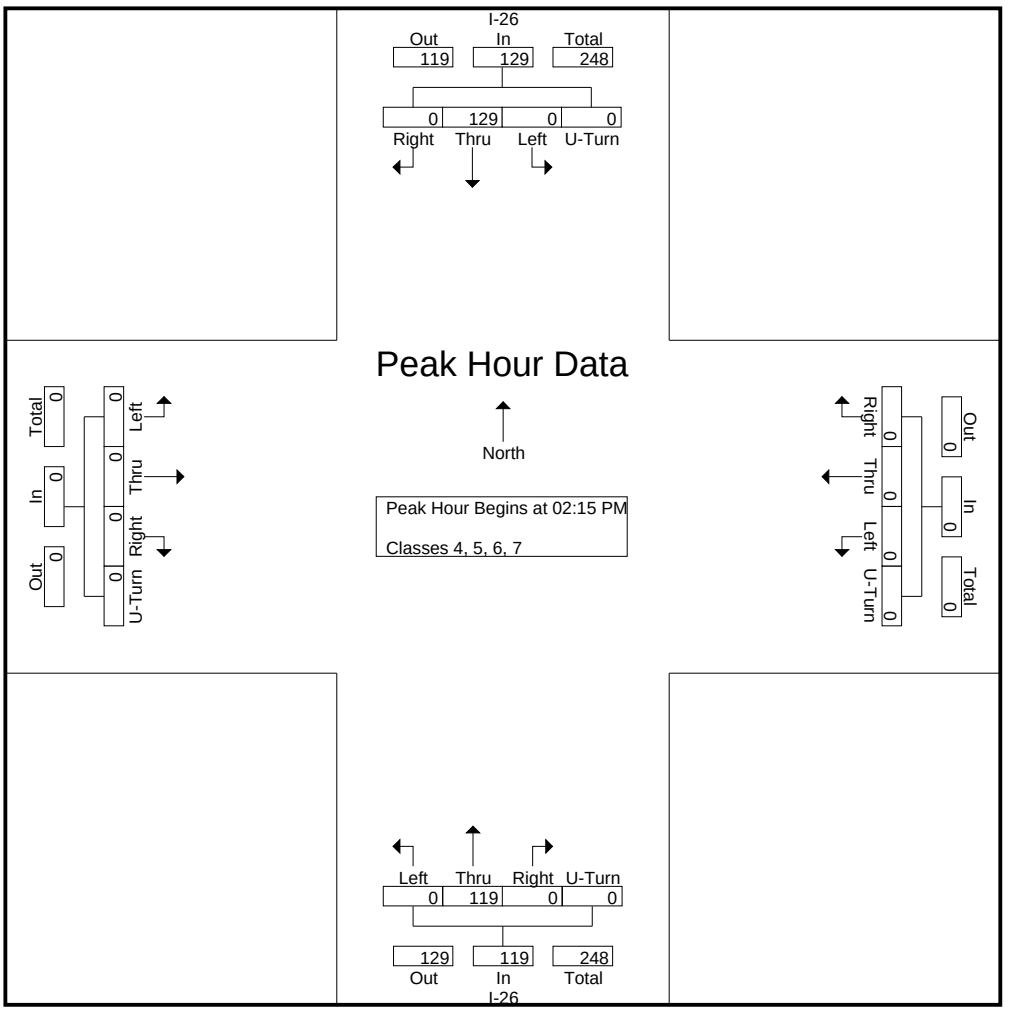

DocuSign Envelope ID: 5C03745C-4B01-4834-A65D-B77F558A4F46

Quality Counts

920 Blairhill Rd, Ste B-106
Charlotte, NC 28217

File Name : 15411720 - I-26 S of Long Shoals Rd
Site Code : 15411720
Start Date : 4/20/2021
Page No : 1

Groups Printed- Classes 8, 9, 10

	I-26 Southbound					Westbound					I-26 Northbound					Eastbound					
Start Time	Left	Thru	Right	U-Turn	App. Total	Left	Thru	Right	U-Turn	App. Total	Left	Thru	Right	U-Turn	App. Total	Left	Thru	Right	U-Turn	App. Total	Int. Total
06:00 AM	0	45	0	0	45	0	0	0	0	0	0	49	0	0	49	0	0	0	0	0	94
06:15 AM	0	47	0	0	47	0	0	0	0	0	0	46	0	0	46	0	0	0	0	0	93
06:30 AM	0	31	0	0	31	0	0	0	0	0	0	38	0	0	38	0	0	0	0	0	69
06:45 AM	0	48	0	0	48	0	0	0	0	0	0	67	0	0	67	0	0	0	0	0	115
Total	0	171	0	0	171	0	0	0	0	0	0	200	0	0	200	0	0	0	0	0	371
07:00 AM	0	32	0	0	32	0	0	0	0	0	0	38	0	0	38	0	0	0	0	0	70
07:15 AM	0	46	0	0	46	0	0	0	0	0	0	45	0	0	45	0	0	0	0	0	91
07:30 AM	0	40	0	0	40	0	0	0	0	0	0	53	0	0	53	0	0	0	0	0	93
07:45 AM	0	46	0	0	46	0	0	0	0	0	0	65	0	0	65	0	0	0	0	0	111
Total	0	164	0	0	164	0	0	0	0	0	0	201	0	0	201	0	0	0	0	0	365
08:00 AM	0	62	0	0	62	0	0	0	0	0	0	50	0	0	50	0	0	0	0	0	112
08:15 AM	0	62	0	0	62	0	0	0	0	0	0	59	0	0	59	0	0	0	0	0	121
08:30 AM	0	64	0	0	64	0	0	0	0	0	0	64	0	0	64	0	0	0	0	0	128
08:45 AM	0	60	0	0	60	0	0	0	0	0	0	50	0	0	50	0	0	0	0	0	110
Total	0	248	0	0	248	0	0	0	0	0	0	223	0	0	223	0	0	0	0	0	471
09:00 AM	0	67	0	0	67	0	0	0	0	0	0	62	0	0	62	0	0	0	0	0	129
09:15 AM	0	64	0	0	64	0	0	0	0	0	0	63	0	0	63	0	0	0	0	0	127
09:30 AM	0	54	0	0	54	0	0	0	0	0	0	70	0	0	70	0	0	0	0	0	124
09:45 AM	0	73	0	0	73	0	0	0	0	0	0	80	0	0	80	0	0	0	0	0	153
Total	0	258	0	0	258	0	0	0	0	0	0	275	0	0	275	0	0	0	0	0	533
10:00 AM	0	62	0	0	62	0	0	0	0	0	0	57	0	0	57	0	0	0	0	0	119
10:15 AM	0	52	0	0	52	0	0	0	0	0	0	64	0	0	64	0	0	0	0	0	116
10:30 AM	0	79	0	0	79	0	0	0	0	0	0	64	0	0	64	0	0	0	0	0	143
10:45 AM	0	55	0	0	55	0	0	0	0	0	0	65	0	0	65	0	0	0	0	0	120
Total	0	248	0	0	248	0	0	0	0	0	0	250	0	0	250	0	0	0	0	0	498
11:00 AM	0	66	0	0	66	0	0	0	0	0	0	73	0	0	73	0	0	0	0	0	139
11:15 AM	0	55	0	0	55	0	0	0	0	0	0	58	0	0	58	0	0	0	0	0	113
11:30 AM	0	69	0	0	69	0	0	0	0	0	0	69	0	0	69	0	0	0	0	0	138
11:45 AM	0	62	0	0	62	0	0	0	0	0	0	73	0	0	73	0	0	0	0	0	135
Total	0	252	0	0	252	0	0	0	0	0	0	273	0	0	273	0	0	0	0	0	525
12:00 PM	0	60	0	0	60	0	0	0	0	0	0	100	0	0	100	0	0	0	0	0	160
12:15 PM	0	57	0	0	57	0	0	0	0	0	0	69	0	0	69	0	0	0	0	0	126
12:30 PM	0	63	0	0	63	0	0	0	0	0	0	70	0	0	70	0	0	0	0	0	133
12:45 PM	0	76	0	0	76	0	0	0	0	0	0	74	0	0	74	0	0	0	0	0	150
Total	0	256	0	0	256	0	0	0	0	0	0	313	0	0	313	0	0	0	0	0	569
01:00 PM	0	59	0	0	59	0	0	0	0	0	0	79	0	0	79	0	0	0	0	0	138
01:15 PM	0	68	0	0	68	0	0	0	0	0	0	79	0	0	79	0	0	0	0	0	147
01:30 PM	0	66	0	0	66	0	0	0	0	0	0	59	0	0	59	0	0	0	0	0	125
01:45 PM	0	59	0	0	59	0	0	0	0	0	0	86	0	0	86	0	0	0	0	0	145
Total	0	252	0	0	252	0	0	0	0	0	0	303	0	0	303	0	0	0	0	0	555
02:00 PM	0	64	0	0	64	0	0	0	0	0	0	70	0	0	70	0	0	0	0	0	134
02:15 PM	0	59	0	0	59	0	0	0	0	0	0	81	0	0	81	0	0	0	0	0	140
02:30 PM	0	42	0	0	42	0	0	0	0	0	0	82	0	0	82	0	0	0	0	0	124
02:45 PM	0	53	0	0	53	0	0	0	0	0	0	77	0	0	77	0	0	0	0	0	130
Total	0	218	0	0	218	0	0	0	0	0	0	310	0	0	310	0	0	0	0	0	528
03:00 PM	0	58	0	0	58	0	0	0	0	0	0	56	0	0	56	0	0	0	0	0	114
03:15 PM	0	67	0	0	67	0	0	0	0	0	0	81	0	0	81	0	0	0	0	0	148
03:30 PM	0	49	0	0	49	0	0	0	0	0	0	76	0	0	76	0	0	0	0	0	125

DocuSign Envelope ID: 5C03745C-4B01-4834-A65D-B77F558A4F46

Quality Counts

920 Blairhill Rd, Ste B-106
Charlotte, NC 28217

File Name : 15411720 - I-26 S of Long Shoals Rd
Site Code : 15411720
Start Date : 4/20/2021
Page No : 2

Groups Printed- Classes 8, 9, 10

	I-26 Southbound					Westbound					I-26 Northbound					Eastbound					
Start Time	Left	Thru	Right	U-Turn	App. Total	Left	Thru	Right	U-Turn	App. Total	Left	Thru	Right	U-Turn	App. Total	Left	Thru	Right	U-Turn	App. Total	Int. Total
03:45 PM	0	58	0	0	58	0	0	0	0	0	0	74	0	0	74	0	0	0	0	0	132
Total	0	232	0	0	232	0	0	0	0	0	0	287	0	0	287	0	0	0	0	0	519
04:00 PM	0	70	0	0	70	0	0	0	0	0	0	47	0	0	47	0	0	0	0	0	117
04:15 PM	0	68	0	0	68	0	0	0	0	0	0	70	0	0	70	0	0	0	0	0	138
04:30 PM	0	65	0	0	65	0	0	0	0	0	0	76	0	0	76	0	0	0	0	0	141
04:45 PM	0	54	0	0	54	0	0	0	0	0	0	64	0	0	64	0	0	0	0	0	118
Total	0	257	0	0	257	0	0	0	0	0	0	257	0	0	257	0	0	0	0	0	514
05:00 PM	0	52	0	0	52	0	0	0	0	0	0	76	0	0	76	0	0	0	0	0	128
05:15 PM	0	57	0	0	57	0	0	0	0	0	0	66	0	0	66	0	0	0	0	0	123
05:30 PM	0	55	0	0	55	0	0	0	0	0	0	59	0	0	59	0	0	0	0	0	114
05:45 PM	0	53	0	0	53	0	0	0	0	0	0	67	0	0	67	0	0	0	0	0	120
Total	0	217	0	0	217	0	0	0	0	0	0	268	0	0	268	0	0	0	0	0	485
06:00 PM	0	63	0	0	63	0	0	0	0	0	0	47	0	0	47	0	0	0	0	0	110
06:15 PM	0	54	0	0	54	0	0	0	0	0	0	50	0	0	50	0	0	0	0	0	104
06:30 PM	0	68	0	0	68	0	0	0	0	0	0	47	0	0	47	0	0	0	0	0	115
06:45 PM	0	49	0	0	49	0	0	0	0	0	0	25	0	0	25	0	0	0	0	0	74
Total	0	234	0	0	234	0	0	0	0	0	0	169	0	0	169	0	0	0	0	0	403
07:00 PM	0	18	0	0	18	0	0	0	0	0	0	12	0	0	12	0	0	0	0	0	30
07:15 PM	0	20	0	0	20	0	0	0	0	0	0	45	0	0	45	0	0	0	0	0	65
07:30 PM	0	42	0	0	42	0	0	0	0	0	0	33	0	0	33	0	0	0	0	0	75
07:45 PM	0	34	0	0	34	0	0	0	0	0	0	48	0	0	48	0	0	0	0	0	82
Total	0	114	0	0	114	0	0	0	0	0	0	138	0	0	138	0	0	0	0	0	252
Grand Total	0	3121	0	0	3121	0	0	0	0	0	0	3467	0	0	3467	0	0	0	0	0	6588
Apprch %	0	100	0	0		0	0	0	0		0	100	0	0		0	0	0	0		
Total %	0	47.4	0	0	47.4	0	0	0	0	0	0	52.6	0	0	52.6	0	0	0	0	0	

DocuSign Envelope ID: 5C03745C-4B01-4834-A65D-B77F558A4F46

Quality Counts

920 Blairhill Rd, Ste B-106
Charlotte, NC 28217

File Name : 15411720 - I-26 S of Long Shoals Rd
Site Code : 15411720
Start Date : 4/20/2021
Page No : 3

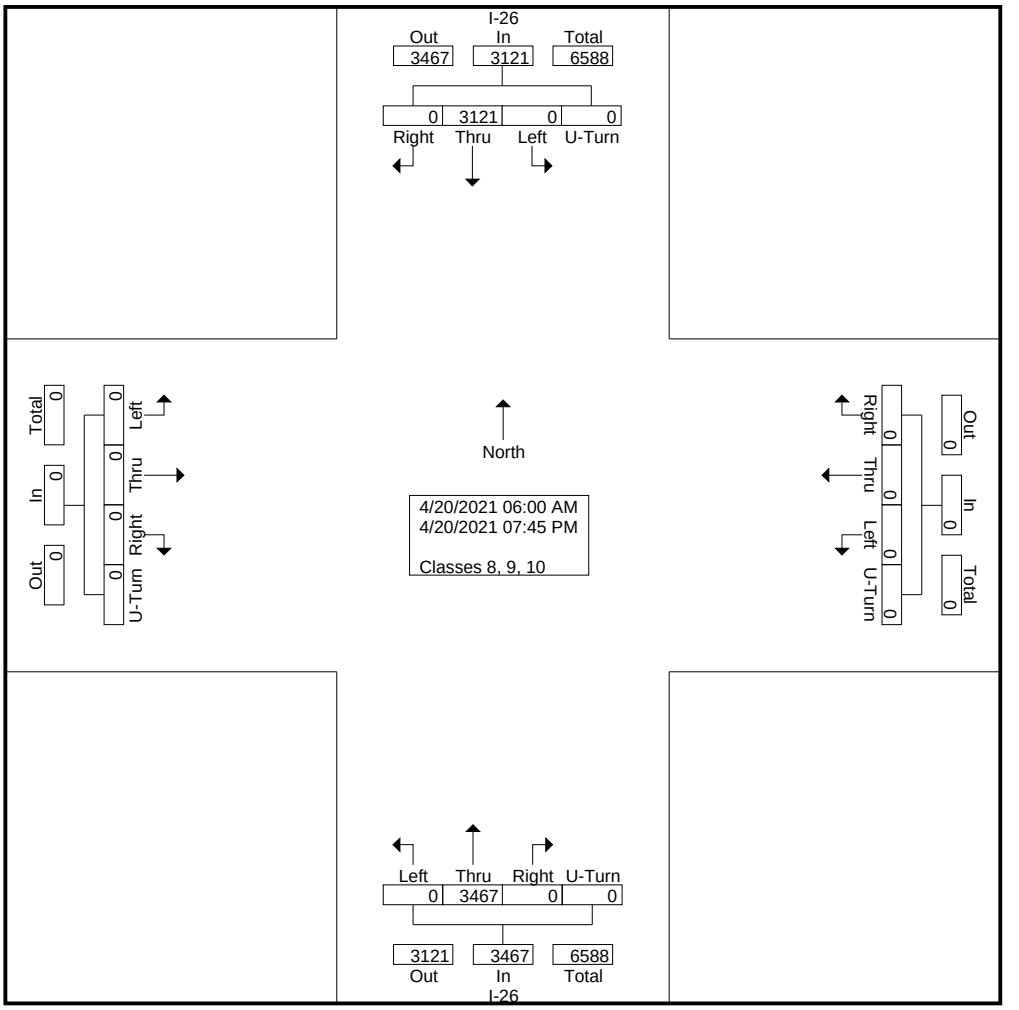

DocuSign Envelope ID: 5C03745C-4B01-4834-A65D-B77F558A4F46

Quality Counts

920 Blairhill Rd, Ste B-106
Charlotte, NC 28217

File Name : 15411720 - I-26 S of Long Shoals Rd
Site Code : 15411720
Start Date : 4/20/2021
Page No : 4

	I-26 Southbound					Westbound					I-26 Northbound					Eastbound					
Start Time	Left	Thru	Right	U-Turn	App. Total	Left	Thru	Right	U-Turn	App. Total	Left	Thru	Right	U-Turn	App. Total	Left	Thru	Right	U-Turn	App. Total	Int. Total
Peak Hour Analysis From 06:00 AM to 11:45 AM - Peak 1 of 1																					
Peak Hour for Entire Intersection Begins at 09:00 AM																					
09:00 AM	0	67	0	0	67	0	0	0	0	0	0	62	0	0	62	0	0	0	0	0	129
09:15 AM	0	64	0	0	64	0	0	0	0	0	0	63	0	0	63	0	0	0	0	0	127
09:30 AM	0	54	0	0	54	0	0	0	0	0	0	70	0	0	70	0	0	0	0	0	124
09:45 AM	0	**73**	0	0	**73**	0	0	0	0	0	0	**80**	0	0	**80**	0	0	0	0	0	**153**
Total Volume	0	258	0	0	258	0	0	0	0	0	0	275	0	0	275	0	0	0	0	0	533
% App. Total	0	100	0	0		0	0	0	0		0	100	0	0		0	0	0	0		
PHF	.000	.884	.000	.000	.884	.000	.000	.000	.000	.000	.000	.859	.000	.000	.859	.000	.000	.000	.000	.000	.871

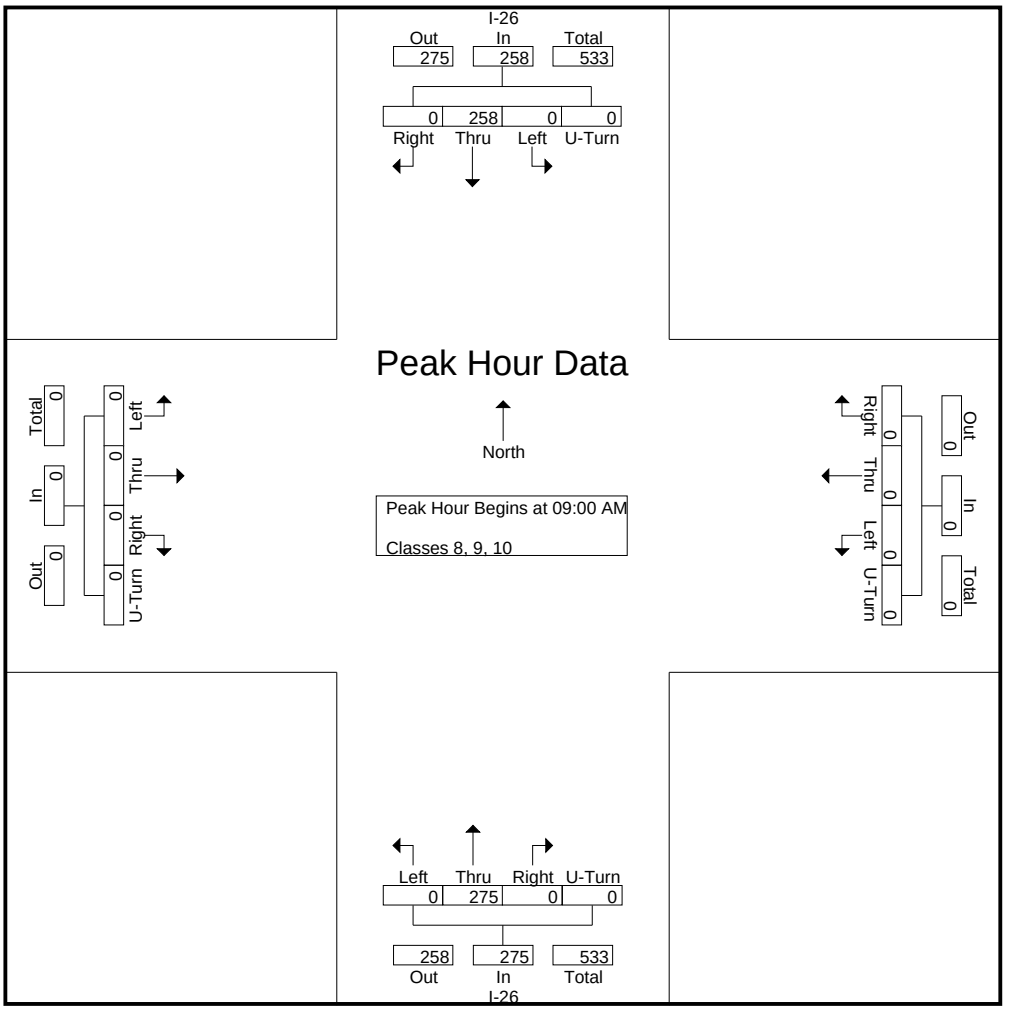

DocuSign Envelope ID: 5C03745C-4B01-4834-A65D-B77F558A4F46

Quality Counts

920 Blairhill Rd, Ste B-106
Charlotte, NC 28217

File Name : 15411720 - I-26 S of Long Shoals Rd
Site Code : 15411720
Start Date : 4/20/2021
Page No : 5

	I-26 Southbound					Westbound					I-26 Northbound					Eastbound					
Start Time	Left	Thru	Right	U-Turn	App. Total	Left	Thru	Right	U-Turn	App. Total	Left	Thru	Right	U-Turn	App. Total	Left	Thru	Right	U-Turn	App. Total	Int. Total
Peak Hour Analysis From 12:00 PM to 07:45 PM - Peak 1 of 1																					
Peak Hour for Entire Intersection Begins at 12:00 PM																					
12:00 PM	0	60	0	0	60	0	0	0	0	0	0	**100**	0	0	**100**	0	0	0	0	0	**160**
12:15 PM	0	57	0	0	57	0	0	0	0	0	0	69	0	0	69	0	0	0	0	0	126
12:30 PM	0	63	0	0	63	0	0	0	0	0	0	70	0	0	70	0	0	0	0	0	133
12:45 PM	0	**76**	0	0	**76**	0	0	0	0	0	0	74	0	0	74	0	0	0	0	0	150
Total Volume	0	256	0	0	256	0	0	0	0	0	0	313	0	0	313	0	0	0	0	0	569
% App. Total	0	100	0	0		0	0	0	0		0	100	0	0		0	0	0	0		
PHF	.000	.842	.000	.000	.842	.000	.000	.000	.000	.000	.000	.783	.000	.000	.783	.000	.000	.000	.000	.000	.889

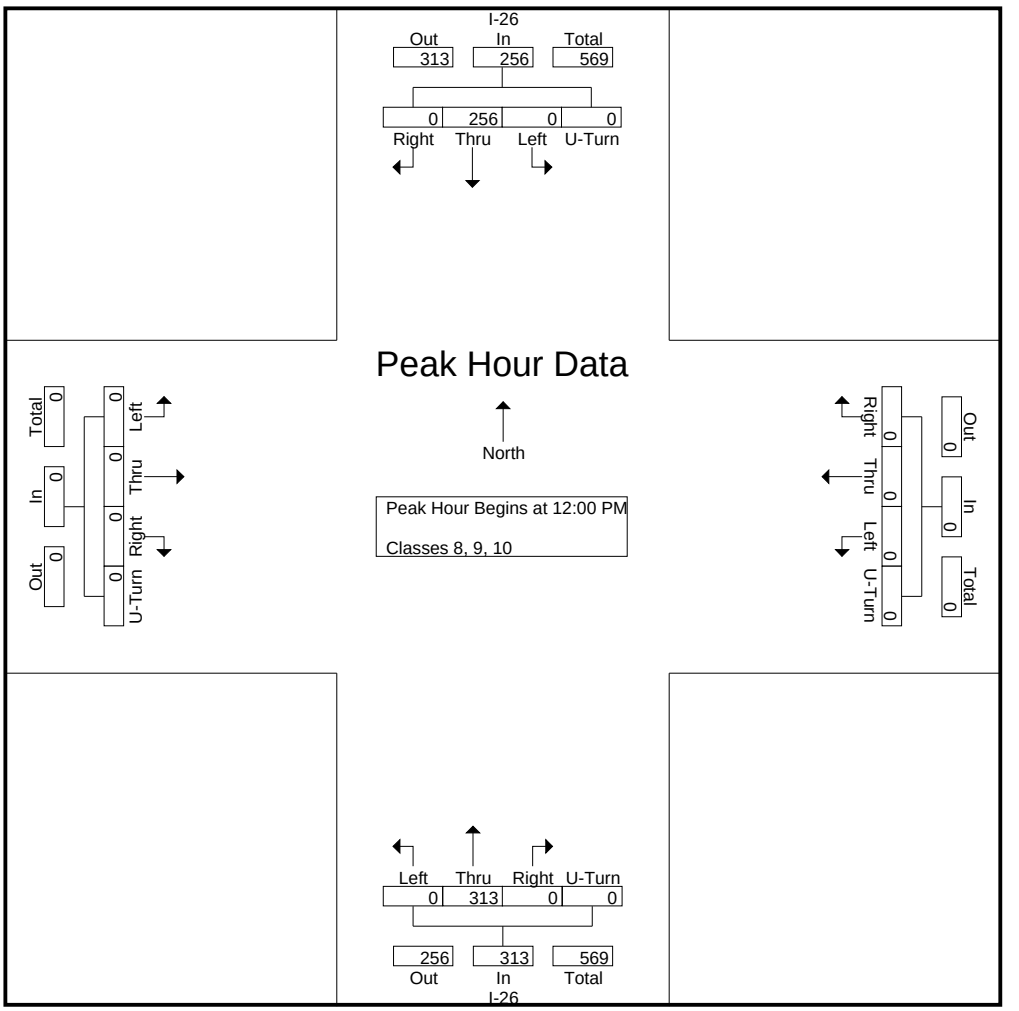

DocuSign Envelope ID: 5C03745C-4B01-4834-A65D-B77F558A4F46

Quality Counts

920 Blairhill Rd, Ste B-106
Charlotte, NC 28217

File Name : 15411720 - I-26 S of Long Shoals Rd
Site Code : 15411720
Start Date : 4/20/2021
Page No : 1

Groups Printed- Classes 11, 12, 13

	I-26 Southbound					Westbound					I-26 Northbound					Eastbound					
Start Time	Left	Thru	Right	U-Turn	App. Total	Left	Thru	Right	U-Turn	App. Total	Left	Thru	Right	U-Turn	App. Total	Left	Thru	Right	U-Turn	App. Total	Int. Total
06:00 AM	0	0	0	0	0	0	0	0	0	0	0	1	0	0	1	0	0	0	0	0	1
06:15 AM	0	7	0	0	7	0	0	0	0	0	0	4	0	0	4	0	0	0	0	0	11
06:30 AM	0	4	0	0	4	0	0	0	0	0	0	3	0	0	3	0	0	0	0	0	7
06:45 AM	0	5	0	0	5	0	0	0	0	0	0	1	0	0	1	0	0	0	0	0	6
Total	0	16	0	0	16	0	0	0	0	0	0	9	0	0	9	0	0	0	0	0	25
07:00 AM	0	2	0	0	2	0	0	0	0	0	0	4	0	0	4	0	0	0	0	0	6
07:15 AM	0	3	0	0	3	0	0	0	0	0	0	4	0	0	4	0	0	0	0	0	7
07:30 AM	0	1	0	0	1	0	0	0	0	0	0	4	0	0	4	0	0	0	0	0	5
07:45 AM	0	1	0	0	1	0	0	0	0	0	0	3	0	0	3	0	0	0	0	0	4
Total	0	7	0	0	7	0	0	0	0	0	0	15	0	0	15	0	0	0	0	0	22
08:00 AM	0	0	0	0	0	0	0	0	0	0	0	1	0	0	1	0	0	0	0	0	1
08:15 AM	0	0	0	0	0	0	0	0	0	0	0	7	0	0	7	0	0	0	0	0	7
08:30 AM	0	1	0	0	1	0	0	0	0	0	0	1	0	0	1	0	0	0	0	0	2
08:45 AM	0	0	0	0	0	0	0	0	0	0	0	4	0	0	4	0	0	0	0	0	4
Total	0	1	0	0	1	0	0	0	0	0	0	13	0	0	13	0	0	0	0	0	14
09:00 AM	0	4	0	0	4	0	0	0	0	0	0	3	0	0	3	0	0	0	0	0	7
09:15 AM	0	3	0	0	3	0	0	0	0	0	0	1	0	0	1	0	0	0	0	0	4
09:30 AM	0	1	0	0	1	0	0	0	0	0	0	2	0	0	2	0	0	0	0	0	3
09:45 AM	0	0	0	0	0	0	0	0	0	0	0	3	0	0	3	0	0	0	0	0	3
Total	0	8	0	0	8	0	0	0	0	0	0	9	0	0	9	0	0	0	0	0	17
10:00 AM	0	0	0	0	0	0	0	0	0	0	0	3	0	0	3	0	0	0	0	0	3
10:15 AM	0	1	0	0	1	0	0	0	0	0	0	1	0	0	1	0	0	0	0	0	2
10:30 AM	0	2	0	0	2	0	0	0	0	0	0	1	0	0	1	0	0	0	0	0	3
10:45 AM	0	1	0	0	1	0	0	0	0	0	0	2	0	0	2	0	0	0	0	0	3
Total	0	4	0	0	4	0	0	0	0	0	0	7	0	0	7	0	0	0	0	0	11
11:00 AM	0	0	0	0	0	0	0	0	0	0	0	2	0	0	2	0	0	0	0	0	2
11:15 AM	0	0	0	0	0	0	0	0	0	0	0	5	0	0	5	0	0	0	0	0	5
11:30 AM	0	1	0	0	1	0	0	0	0	0	0	2	0	0	2	0	0	0	0	0	3
11:45 AM	0	1	0	0	1	0	0	0	0	0	0	5	0	0	5	0	0	0	0	0	6
Total	0	2	0	0	2	0	0	0	0	0	0	14	0	0	14	0	0	0	0	0	16
12:00 PM	0	0	0	0	0	0	0	0	0	0	0	7	0	0	7	0	0	0	0	0	7
12:15 PM	0	3	0	0	3	0	0	0	0	0	0	2	0	0	2	0	0	0	0	0	5
12:30 PM	0	0	0	0	0	0	0	0	0	0	0	0	0	0	0	0	0	0	0	0	0
12:45 PM	0	1	0	0	1	0	0	0	0	0	0	2	0	0	2	0	0	0	0	0	3
Total	0	4	0	0	4	0	0	0	0	0	0	11	0	0	11	0	0	0	0	0	15
01:00 PM	0	2	0	0	2	0	0	0	0	0	0	0	0	0	0	0	0	0	0	0	2
01:15 PM	0	1	0	0	1	0	0	0	0	0	0	3	0	0	3	0	0	0	0	0	4
01:30 PM	0	1	0	0	1	0	0	0	0	0	0	0	0	0	0	0	0	0	0	0	1
01:45 PM	0	1	0	0	1	0	0	0	0	0	0	0	0	0	0	0	0	0	0	0	1
Total	0	5	0	0	5	0	0	0	0	0	0	3	0	0	3	0	0	0	0	0	8
02:00 PM	0	0	0	0	0	0	0	0	0	0	0	0	0	0	0	0	0	0	0	0	0
02:15 PM	0	2	0	0	2	0	0	0	0	0	0	1	0	0	1	0	0	0	0	0	3
02:30 PM	0	0	0	0	0	0	0	0	0	0	0	0	0	0	0	0	0	0	0	0	0
02:45 PM	0	0	0	0	0	0	0	0	0	0	0	0	0	0	0	0	0	0	0	0	0
Total	0	2	0	0	2	0	0	0	0	0	0	1	0	0	1	0	0	0	0	0	3
03:00 PM	0	0	0	0	0	0	0	0	0	0	0	0	0	0	0	0	0	0	0	0	0
03:15 PM	0	1	0	0	1	0	0	0	0	0	0	0	0	0	0	0	0	0	0	0	1
03:30 PM	0	1	0	0	1	0	0	0	0	0	0	0	0	0	0	0	0	0	0	0	1

DocuSign Envelope ID: 5C03745C-4B01-4834-A65D-B77F558A4F46

Quality Counts

920 Blairhill Rd, Ste B-106
Charlotte, NC 28217

File Name : 15411720 - I-26 S of Long Shoals Rd
Site Code : 15411720
Start Date : 4/20/2021
Page No : 2

Groups Printed- Classes 11, 12, 13

	I-26 Southbound					Westbound					I-26 Northbound					Eastbound					
Start Time	Left	Thru	Right	U-Turn	App. Total	Left	Thru	Right	U-Turn	App. Total	Left	Thru	Right	U-Turn	App. Total	Left	Thru	Right	U-Turn	App. Total	Int. Total
03:45 PM	0	0	0	0	0	0	0	0	0	0	0	0	0	0	0	0	0	0	0	0	0
Total	0	2	0	0	2	0	0	0	0	0	0	0	0	0	0	0	0	0	0	0	2
04:00 PM	0	0	0	0	0	0	0	0	0	0	0	0	0	0	0	0	0	0	0	0	0
04:15 PM	0	0	0	0	0	0	0	0	0	0	0	0	0	0	0	0	0	0	0	0	0
04:30 PM	0	0	0	0	0	0	0	0	0	0	0	0	0	0	0	0	0	0	0	0	0
04:45 PM	0	0	0	0	0	0	0	0	0	0	0	0	0	0	0	0	0	0	0	0	0
Total	0	0	0	0	0	0	0	0	0	0	0	0	0	0	0	0	0	0	0	0	0
05:00 PM	0	0	0	0	0	0	0	0	0	0	0	0	0	0	0	0	0	0	0	0	0
05:15 PM	0	0	0	0	0	0	0	0	0	0	0	0	0	0	0	0	0	0	0	0	0
05:30 PM	0	0	0	0	0	0	0	0	0	0	0	0	0	0	0	0	0	0	0	0	0
05:45 PM	0	0	0	0	0	0	0	0	0	0	0	1	0	0	1	0	0	0	0	0	1
Total	0	0	0	0	0	0	0	0	0	0	0	1	0	0	1	0	0	0	0	0	1
06:00 PM	0	0	0	0	0	0	0	0	0	0	0	1	0	0	1	0	0	0	0	0	1
06:15 PM	0	0	0	0	0	0	0	0	0	0	0	0	0	0	0	0	0	0	0	0	0
06:30 PM	0	0	0	0	0	0	0	0	0	0	0	0	0	0	0	0	0	0	0	0	0
06:45 PM	0	0	0	0	0	0	0	0	0	0	0	0	0	0	0	0	0	0	0	0	0
Total	0	0	0	0	0	0	0	0	0	0	0	1	0	0	1	0	0	0	0	0	1
07:00 PM	0	1	0	0	1	0	0	0	0	0	0	0	0	0	0	0	0	0	0	0	1
07:15 PM	0	0	0	0	0	0	0	0	0	0	0	1	0	0	1	0	0	0	0	0	1
07:30 PM	0	0	0	0	0	0	0	0	0	0	0	0	0	0	0	0	0	0	0	0	0
07:45 PM	0	0	0	0	0	0	0	0	0	0	0	0	0	0	0	0	0	0	0	0	0
Total	0	1	0	0	1	0	0	0	0	0	0	1	0	0	1	0	0	0	0	0	2
Grand Total	0	52	0	0	52	0	0	0	0	0	0	85	0	0	85	0	0	0	0	0	137
Apprch %	0	100	0	0		0	0	0	0		0	100	0	0		0	0	0	0		
Total %	0	38	0	0	38	0	0	0	0	0	0	62	0	0	62	0	0	0	0	0	

DocuSign Envelope ID: 5C03745C-4B01-4834-A65D-B77F558A4F46

Quality Counts

920 Blairhill Rd, Ste B-106
Charlotte, NC 28217

File Name : 15411720 - I-26 S of Long Shoals Rd
Site Code : 15411720
Start Date : 4/20/2021
Page No : 3

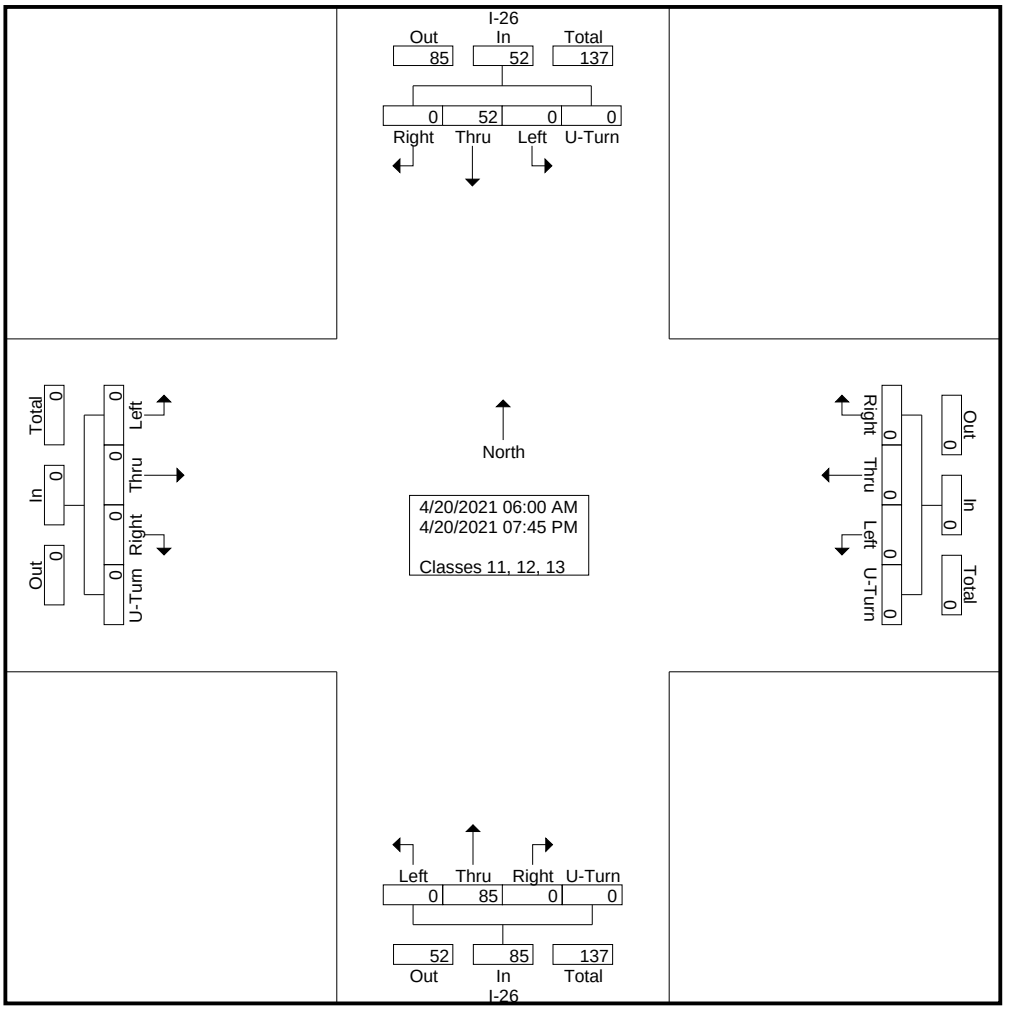

DocuSign Envelope ID: 5C03745C-4B01-4834-A65D-B77F558A4F46

Quality Counts

920 Blairhill Rd, Ste B-106
Charlotte, NC 28217

File Name : 15411720 - I-26 S of Long Shoals Rd
Site Code : 15411720
Start Date : 4/20/2021
Page No : 4

	I-26 Southbound					Westbound					I-26 Northbound					Eastbound					
Start Time	Left	Thru	Right	U-Turn	App. Total	Left	Thru	Right	U-Turn	App. Total	Left	Thru	Right	U-Turn	App. Total	Left	Thru	Right	U-Turn	App. Total	Int. Total
Peak Hour Analysis From 06:00 AM to 11:45 AM - Peak 1 of 1																					
Peak Hour for Entire Intersection Begins at 06:15 AM																					
06:15 AM	0	**7**	0	0	**7**	0	0	0	0	0	0	**4**	0	0	**4**	0	0	0	0	0	**11**
06:30 AM	0	4	0	0	4	0	0	0	0	0	0	3	0	0	3	0	0	0	0	0	7
06:45 AM	0	5	0	0	5	0	0	0	0	0	0	1	0	0	1	0	0	0	0	0	6
07:00 AM	0	2	0	0	2	0	0	0	0	0	0	4	0	0	4	0	0	0	0	0	6
Total Volume	0	18	0	0	18	0	0	0	0	0	0	12	0	0	12	0	0	0	0	0	30
% App. Total	0	100	0	0		0	0	0	0		0	100	0	0		0	0	0	0		
PHF	.000	.643	.000	.000	.643	.000	.000	.000	.000	.000	.000	.750	.000	.000	.750	.000	.000	.000	.000	.000	.682

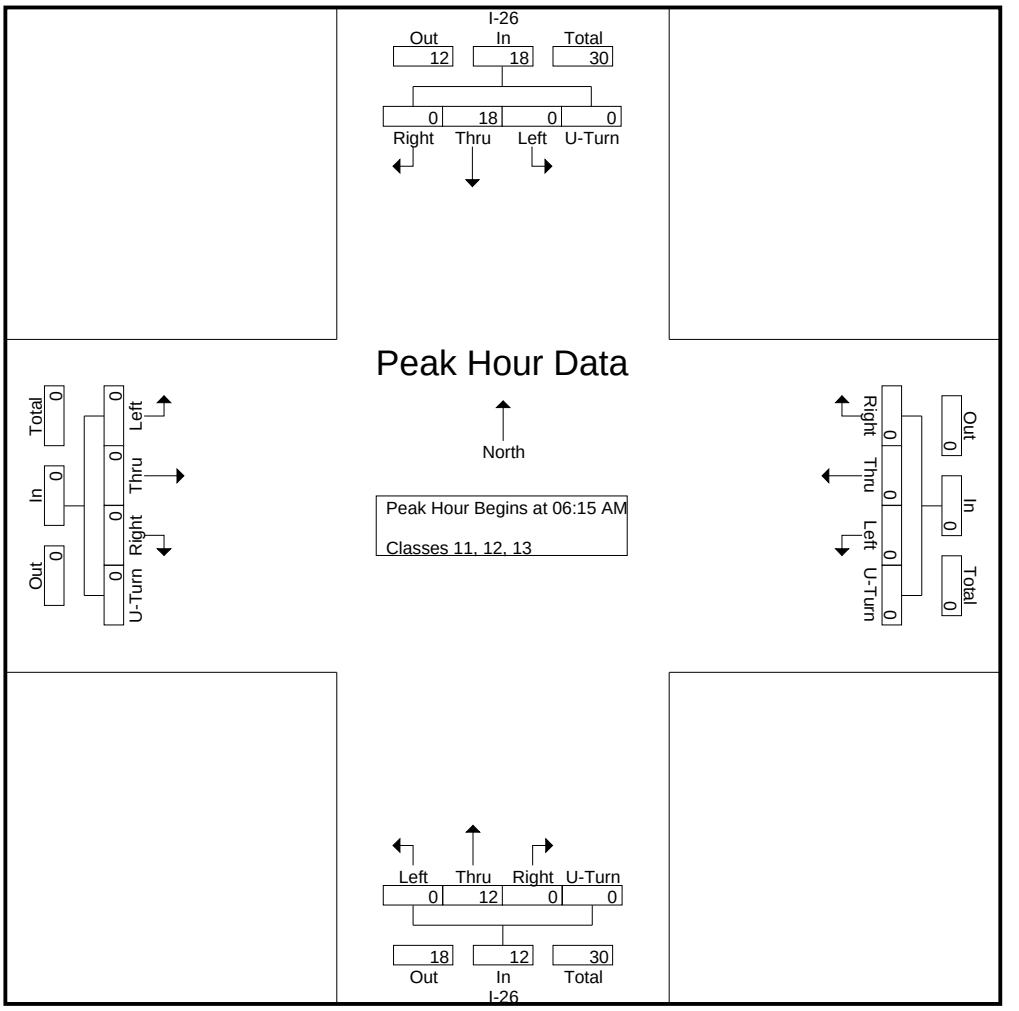

DocuSign Envelope ID: 5C03745C-4B01-4834-A65D-B77F558A4F46

Quality Counts

920 Blairhill Rd, Ste B-106
Charlotte, NC 28217

File Name : 15411720 - I-26 S of Long Shoals Rd
Site Code : 15411720
Start Date : 4/20/2021
Page No : 5

	I-26 Southbound					Westbound					I-26 Northbound					Eastbound					
Start Time	Left	Thru	Right	U-Turn	App. Total	Left	Thru	Right	U-Turn	App. Total	Left	Thru	Right	U-Turn	App. Total	Left	Thru	Right	U-Turn	App. Total	Int. Total
Peak Hour Analysis From 12:00 PM to 07:45 PM - Peak 1 of 1																					
Peak Hour for Entire Intersection Begins at 12:00 PM																					
12:00 PM	0	0	0	0	0	0	0	0	0	0	0	**7**	0	0	**7**	0	0	0	0	0	**7**
12:15 PM	0	**3**	0	0	**3**	0	0	0	0	0	0	2	0	0	2	0	0	0	0	0	5
12:30 PM	0	0	0	0	0	0	0	0	0	0	0	0	0	0	0	0	0	0	0	0	0
12:45 PM	0	1	0	0	1	0	0	0	0	0	0	2	0	0	2	0	0	0	0	0	3
Total Volume	0	4	0	0	4	0	0	0	0	0	0	11	0	0	11	0	0	0	0	0	15
% App. Total	0	100	0	0		0	0	0	0		0	100	0	0		0	0	0	0		
PHF	.000	.333	.000	.000	.333	.000	.000	.000	.000	.000	.000	.393	.000	.000	.393	.000	.000	.000	.000	.000	.536

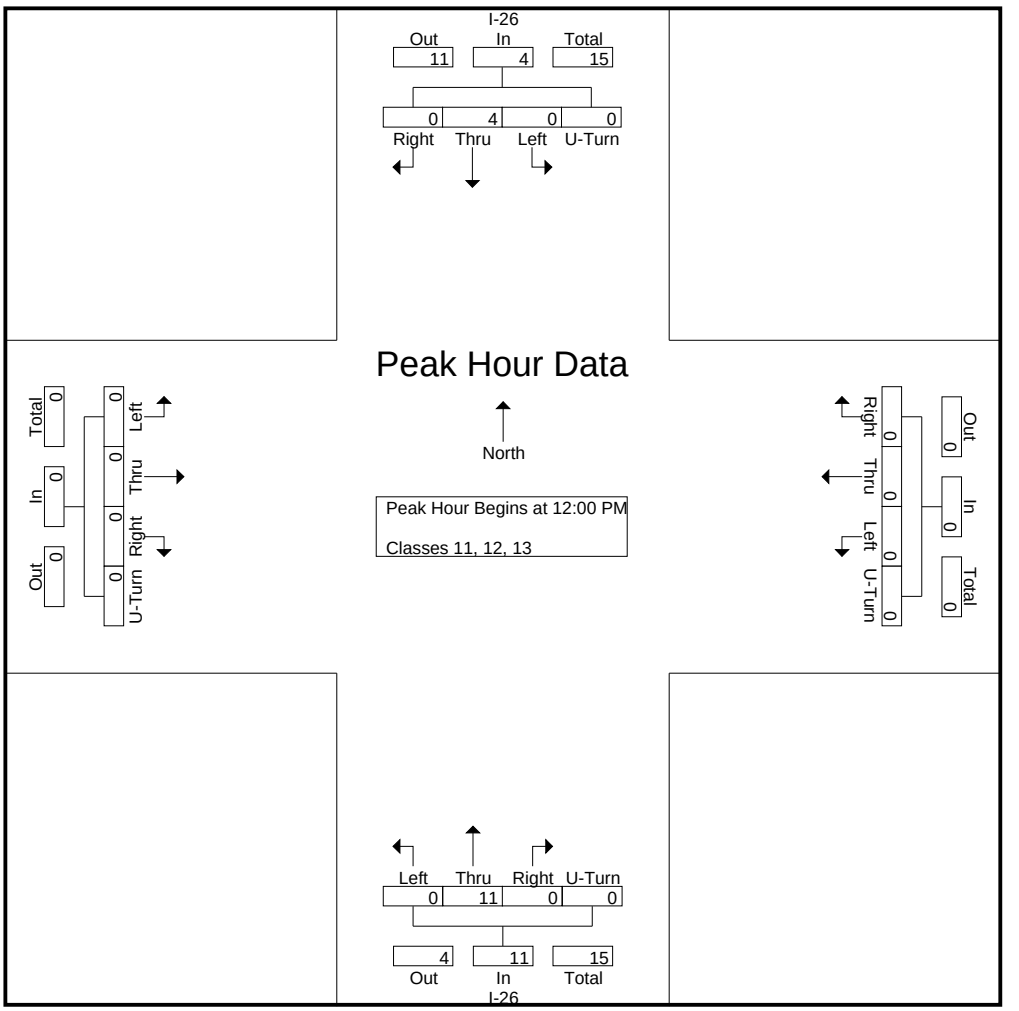

DocuSign Envelope ID: 5C03745C-4B01-4834-A65D-B77F558A4F46

Quality Counts

920 Blairhill Rd, Ste B-106
Charlotte, NC 28217

File Name : 15411720 - I-26 S of Long Shoals Rd
Site Code : 15411720
Start Date : 4/20/2021
Page No : 1

Groups Printed- Bikes, Peds

	I-26 Southbound					Westbound					I-26 Northbound					Eastbound					
Start Time	Left	Thru	Right	Peds	App. Total	Left	Thru	Right	Peds	App. Total	Left	Thru	Right	Peds	App. Total	Left	Thru	Right	Peds	App. Total	Int. Total
06:00 AM	0	0	0	0	0	0	0	0	0	0	0	0	0	0	0	0	0	0	0	0	0
06:15 AM	0	0	0	0	0	0	0	0	0	0	0	0	0	0	0	0	0	0	0	0	0
06:30 AM	0	0	0	0	0	0	0	0	0	0	0	0	0	0	0	0	0	0	0	0	0
06:45 AM	0	0	0	0	0	0	0	0	0	0	0	0	0	0	0	0	0	0	0	0	0
Total	0	0	0	0	0	0	0	0	0	0	0	0	0	0	0	0	0	0	0	0	0
07:00 AM	0	0	0	0	0	0	0	0	0	0	0	0	0	0	0	0	0	0	0	0	0
07:15 AM	0	0	0	0	0	0	0	0	0	0	0	0	0	0	0	0	0	0	0	0	0
07:30 AM	0	0	0	0	0	0	0	0	0	0	0	0	0	0	0	0	0	0	0	0	0
07:45 AM	0	0	0	0	0	0	0	0	0	0	0	0	0	0	0	0	0	0	0	0	0
Total	0	0	0	0	0	0	0	0	0	0	0	0	0	0	0	0	0	0	0	0	0
08:00 AM	0	0	0	0	0	0	0	0	0	0	0	0	0	0	0	0	0	0	0	0	0
08:15 AM	0	0	0	0	0	0	0	0	0	0	0	0	0	0	0	0	0	0	0	0	0
08:30 AM	0	0	0	0	0	0	0	0	0	0	0	0	0	0	0	0	0	0	0	0	0
08:45 AM	0	0	0	0	0	0	0	0	0	0	0	0	0	0	0	0	0	0	0	0	0
Total	0	0	0	0	0	0	0	0	0	0	0	0	0	0	0	0	0	0	0	0	0
09:00 AM	0	0	0	0	0	0	0	0	0	0	0	0	0	0	0	0	0	0	0	0	0
09:15 AM	0	0	0	0	0	0	0	0	0	0	0	0	0	0	0	0	0	0	0	0	0
09:30 AM	0	0	0	0	0	0	0	0	0	0	0	0	0	0	0	0	0	0	0	0	0
09:45 AM	0	0	0	0	0	0	0	0	0	0	0	0	0	0	0	0	0	0	0	0	0
Total	0	0	0	0	0	0	0	0	0	0	0	0	0	0	0	0	0	0	0	0	0
10:00 AM	0	0	0	0	0	0	0	0	0	0	0	0	0	0	0	0	0	0	0	0	0
10:15 AM	0	0	0	0	0	0	0	0	0	0	0	0	0	0	0	0	0	0	0	0	0
10:30 AM	0	0	0	0	0	0	0	0	0	0	0	0	0	0	0	0	0	0	0	0	0
10:45 AM	0	0	0	0	0	0	0	0	0	0	0	0	0	0	0	0	0	0	0	0	0
Total	0	0	0	0	0	0	0	0	0	0	0	0	0	0	0	0	0	0	0	0	0
11:00 AM	0	0	0	0	0	0	0	0	0	0	0	0	0	0	0	0	0	0	0	0	0
11:15 AM	0	0	0	0	0	0	0	0	0	0	0	0	0	0	0	0	0	0	0	0	0
11:30 AM	0	0	0	0	0	0	0	0	0	0	0	0	0	0	0	0	0	0	0	0	0
11:45 AM	0	0	0	0	0	0	0	0	0	0	0	0	0	0	0	0	0	0	0	0	0
Total	0	0	0	0	0	0	0	0	0	0	0	0	0	0	0	0	0	0	0	0	0
12:00 PM	0	0	0	0	0	0	0	0	0	0	0	1	0	0	1	0	0	0	0	0	1
12:15 PM	0	0	0	0	0	0	0	0	0	0	0	0	0	0	0	0	0	0	0	0	0
12:30 PM	0	0	0	0	0	0	0	0	0	0	0	0	0	0	0	0	0	0	0	0	0
12:45 PM	0	0	0	0	0	0	0	0	0	0	0	0	0	0	0	0	0	0	0	0	0
Total	0	0	0	0	0	0	0	0	0	0	0	1	0	0	1	0	0	0	0	0	1
01:00 PM	0	0	0	0	0	0	0	0	0	0	0	0	0	0	0	0	0	0	0	0	0
01:15 PM	0	0	0	0	0	0	0	0	0	0	0	0	0	0	0	0	0	0	0	0	0
01:30 PM	0	0	0	0	0	0	0	0	0	0	0	0	0	0	0	0	0	0	0	0	0
01:45 PM	0	0	0	0	0	0	0	0	0	0	0	0	0	0	0	0	0	0	0	0	0
Total	0	0	0	0	0	0	0	0	0	0	0	0	0	0	0	0	0	0	0	0	0
02:00 PM	0	0	0	0	0	0	0	0	0	0	0	0	0	0	0	0	0	0	0	0	0
02:15 PM	0	0	0	0	0	0	0	0	0	0	0	0	0	0	0	0	0	0	0	0	0
02:30 PM	0	0	0	0	0	0	0	0	0	0	0	0	0	0	0	0	0	0	0	0	0
02:45 PM	0	0	0	0	0	0	0	0	0	0	0	0	0	0	0	0	0	0	0	0	0
Total	0	0	0	0	0	0	0	0	0	0	0	0	0	0	0	0	0	0	0	0	0
03:00 PM	0	0	0	0	0	0	0	0	0	0	0	0	0	0	0	0	0	0	0	0	0
03:15 PM	0	0	0	0	0	0	0	0	0	0	0	0	0	0	0	0	0	0	0	0	0
03:30 PM	0	0	0	0	0	0	0	0	0	0	0	0	0	0	0	0	0	0	0	0	0

DocuSign Envelope ID: 5C03745C-4B01-4834-A65D-B77F558A4F46

Quality Counts

920 Blairhill Rd, Ste B-106
Charlotte, NC 28217

File Name : 15411720 - I-26 S of Long Shoals Rd
Site Code : 15411720
Start Date : 4/20/2021
Page No : 2

Groups Printed- Bikes, Peds

	I-26 Southbound					Westbound					I-26 Northbound					Eastbound					
Start Time	Left	Thru	Right	Peds	App. Total	Left	Thru	Right	Peds	App. Total	Left	Thru	Right	Peds	App. Total	Left	Thru	Right	Peds	App. Total	Int. Total
03:45 PM	0	0	0	0	0	0	0	0	0	0	0	0	0	0	0	0	0	0	0	0	0
Total	0	0	0	0	0	0	0	0	0	0	0	0	0	0	0	0	0	0	0	0	0
04:00 PM	0	0	0	0	0	0	0	0	0	0	0	0	0	0	0	0	0	0	0	0	0
04:15 PM	0	0	0	0	0	0	0	0	0	0	0	0	0	0	0	0	0	0	0	0	0
04:30 PM	0	0	0	0	0	0	0	0	0	0	0	0	0	0	0	0	0	0	0	0	0
04:45 PM	0	0	0	0	0	0	0	0	0	0	0	0	0	0	0	0	0	0	0	0	0
Total	0	0	0	0	0	0	0	0	0	0	0	0	0	0	0	0	0	0	0	0	0
05:00 PM	0	0	0	0	0	0	0	0	0	0	0	0	0	0	0	0	0	0	0	0	0
05:15 PM	0	0	0	0	0	0	0	0	0	0	0	0	0	0	0	0	0	0	0	0	0
05:30 PM	0	0	0	0	0	0	0	0	0	0	0	0	0	0	0	0	0	0	0	0	0
05:45 PM	0	0	0	0	0	0	0	0	0	0	0	0	0	0	0	0	0	0	0	0	0
Total	0	0	0	0	0	0	0	0	0	0	0	0	0	0	0	0	0	0	0	0	0
06:00 PM	0	0	0	0	0	0	0	0	0	0	0	0	0	0	0	0	0	0	0	0	0
06:15 PM	0	0	0	0	0	0	0	0	0	0	0	0	0	0	0	0	0	0	0	0	0
06:30 PM	0	0	0	0	0	0	0	0	0	0	0	0	0	0	0	0	0	0	0	0	0
06:45 PM	0	0	0	0	0	0	0	0	0	0	0	0	0	0	0	0	0	0	0	0	0
Total	0	0	0	0	0	0	0	0	0	0	0	0	0	0	0	0	0	0	0	0	0
07:00 PM	0	0	0	0	0	0	0	0	0	0	0	0	0	0	0	0	0	0	0	0	0
07:15 PM	0	0	0	0	0	0	0	0	0	0	0	0	0	0	0	0	0	0	0	0	0
07:30 PM	0	0	0	0	0	0	0	0	0	0	0	0	0	0	0	0	0	0	0	0	0
07:45 PM	0	0	0	0	0	0	0	0	0	0	0	0	0	0	0	0	0	0	0	0	0
Total	0	0	0	0	0	0	0	0	0	0	0	0	0	0	0	0	0	0	0	0	0
Grand Total	0	0	0	0	0	0	0	0	0	0	0	1	0	0	1	0	0	0	0	0	1
Apprch %	0	0	0	0		0	0	0	0		0	100	0	0		0	0	0	0		
Total %	0	0	0	0	0	0	0	0	0	0	0	100	0	0	100	0	0	0	0	0	

DocuSign Envelope ID: 5C03745C-4B01-4834-A65D-B77F558A4F46

Quality Counts

920 Blairhill Rd, Ste B-106
Charlotte, NC 28217

File Name : 15411720 - I-26 S of Long Shoals Rd
Site Code : 15411720
Start Date : 4/20/2021
Page No : 3

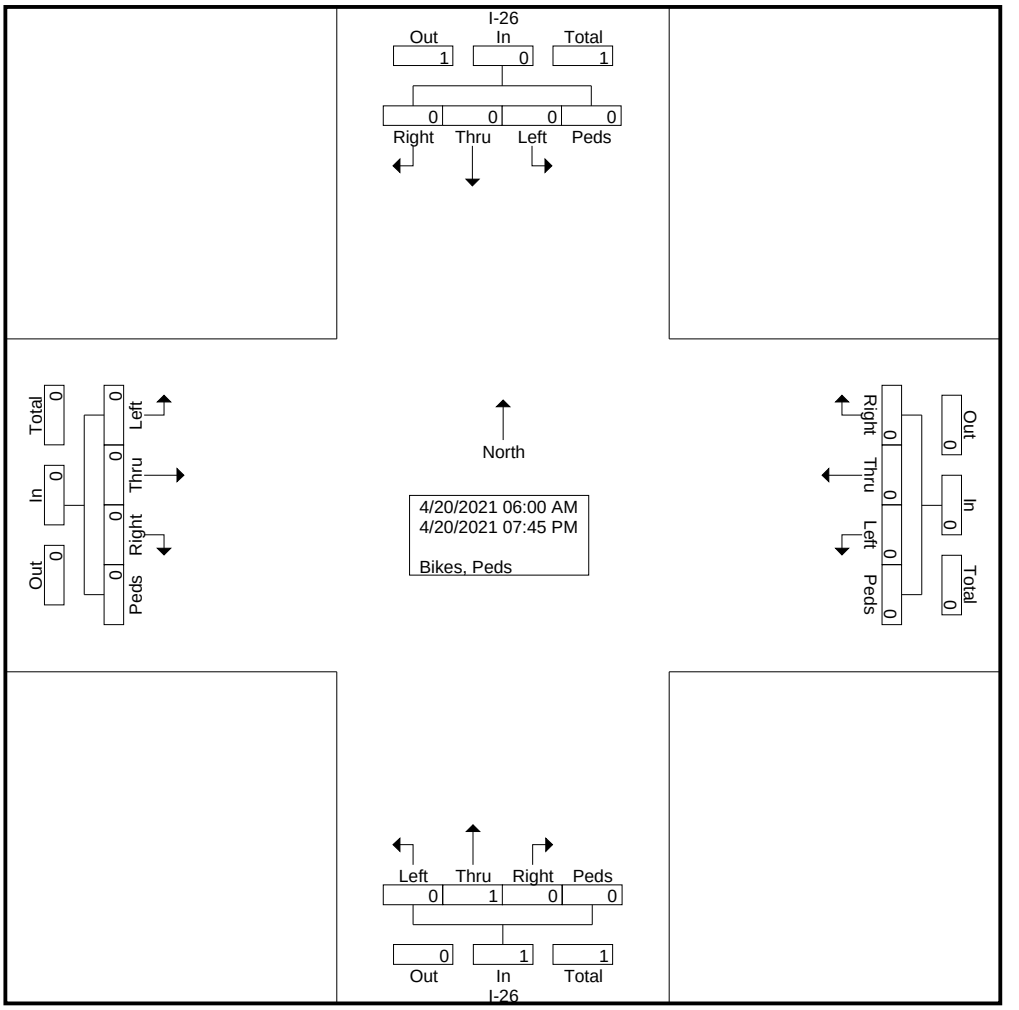

DocuSign Envelope ID: 5C03745C-4B01-4834-A65D-B77F558A4F46

Quality Counts

920 Blairhill Rd, Ste B-106
Charlotte, NC 28217

File Name : 15411720 - I-26 S of Long Shoals Rd
Site Code : 15411720
Start Date : 4/20/2021
Page No : 4

	I-26 Southbound					Westbound					I-26 Northbound					Eastbound					
Start Time	Left	Thru	Right	Peds	App. Total	Left	Thru	Right	Peds	App. Total	Left	Thru	Right	Peds	App. Total	Left	Thru	Right	Peds	App. Total	Int. Total
Peak Hour Analysis From 06:00 AM to 11:45 AM - Peak 1 of 1																					
Peak Hour for Entire Intersection Begins at 06:00 AM																					
06:00 AM	0	0	0	0	0	0	0	0	0	0	0	0	0	0	0	0	0	0	0	0	0
06:15 AM	0	0	0	0	0	0	0	0	0	0	0	0	0	0	0	0	0	0	0	0	0
06:30 AM	0	0	0	0	0	0	0	0	0	0	0	0	0	0	0	0	0	0	0	0	0
06:45 AM	0	0	0	0	0	0	0	0	0	0	0	0	0	0	0	0	0	0	0	0	0
Total Volume	0	0	0	0	0	0	0	0	0	0	0	0	0	0	0	0	0	0	0	0	0
% App. Total	0	0	0	0		0	0	0	0		0	0	0	0		0	0	0	0		
PHF	.000	.000	.000	.000	.000	.000	.000	.000	.000	.000	.000	.000	.000	.000	.000	.000	.000	.000	.000	.000	.000

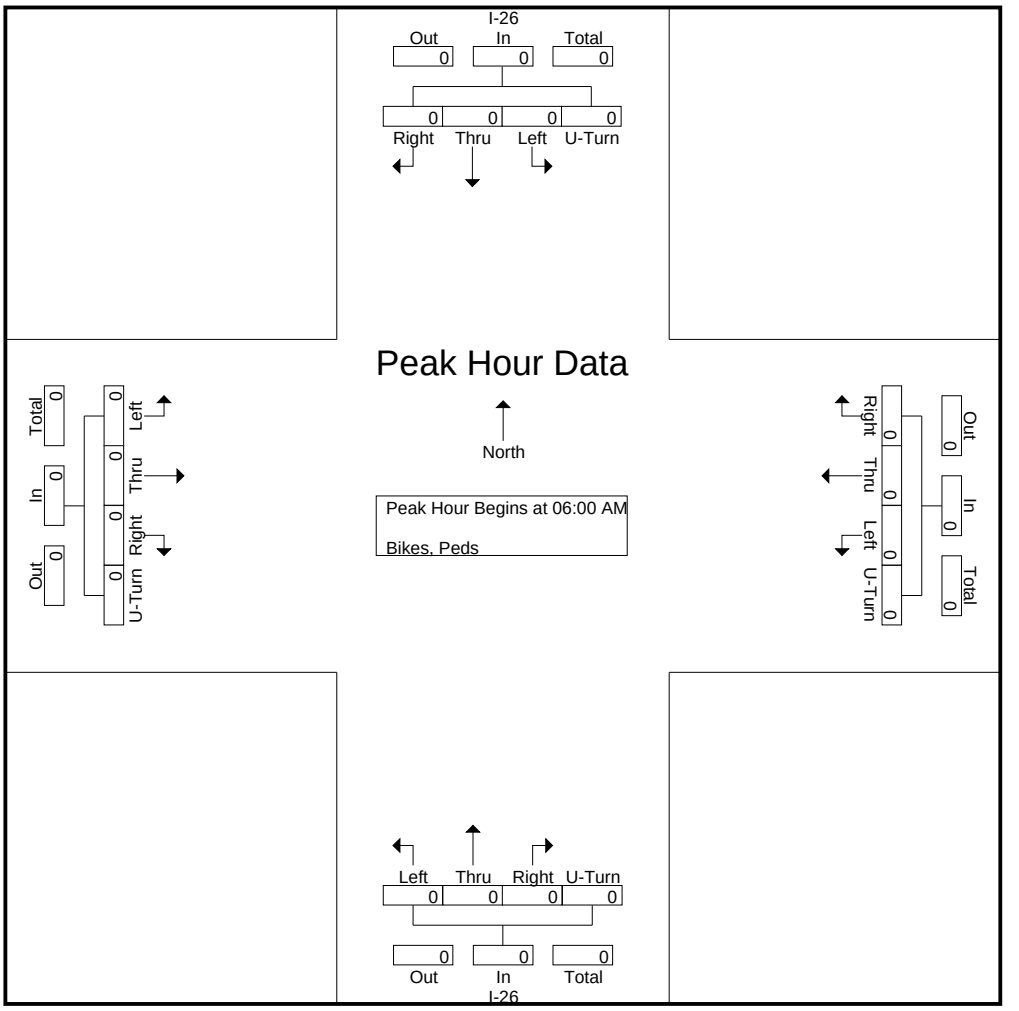

DocuSign Envelope ID: 5C03745C-4B01-4834-A65D-B77F558A4F46

Quality Counts

920 Blairhill Rd, Ste B-106
Charlotte, NC 28217

File Name : 15411720 - I-26 S of Long Shoals Rd
Site Code : 15411720
Start Date : 4/20/2021
Page No : 5

	I-26 Southbound					Westbound					I-26 Northbound					Eastbound					
Start Time	Left	Thru	Right	Peds	App. Total	Left	Thru	Right	Peds	App. Total	Left	Thru	Right	Peds	App. Total	Left	Thru	Right	Peds	App. Total	Int. Total
Peak Hour Analysis From 12:00 PM to 07:45 PM - Peak 1 of 1																					
Peak Hour for Entire Intersection Begins at 12:00 PM																					
12:00 PM	0	0	0	0	0	0	0	0	0	0	0	**1**	0	0	**1**	0	0	0	0	0	**1**
12:15 PM	0	0	0	0	0	0	0	0	0	0	0	0	0	0	0	0	0	0	0	0	0
12:30 PM	0	0	0	0	0	0	0	0	0	0	0	0	0	0	0	0	0	0	0	0	0
12:45 PM	0	0	0	0	0	0	0	0	0	0	0	0	0	0	0	0	0	0	0	0	0
Total Volume	0	0	0	0	0	0	0	0	0	0	0	1	0	0	1	0	0	0	0	0	1
% App. Total	0	0	0	0		0	0	0	0		0	100	0	0		0	0	0	0		
PHF	.000	.000	.000	.000	.000	.000	.000	.000	.000	.000	.000	.250	.000	.000	.250	.000	.000	.000	.000	.000	.250

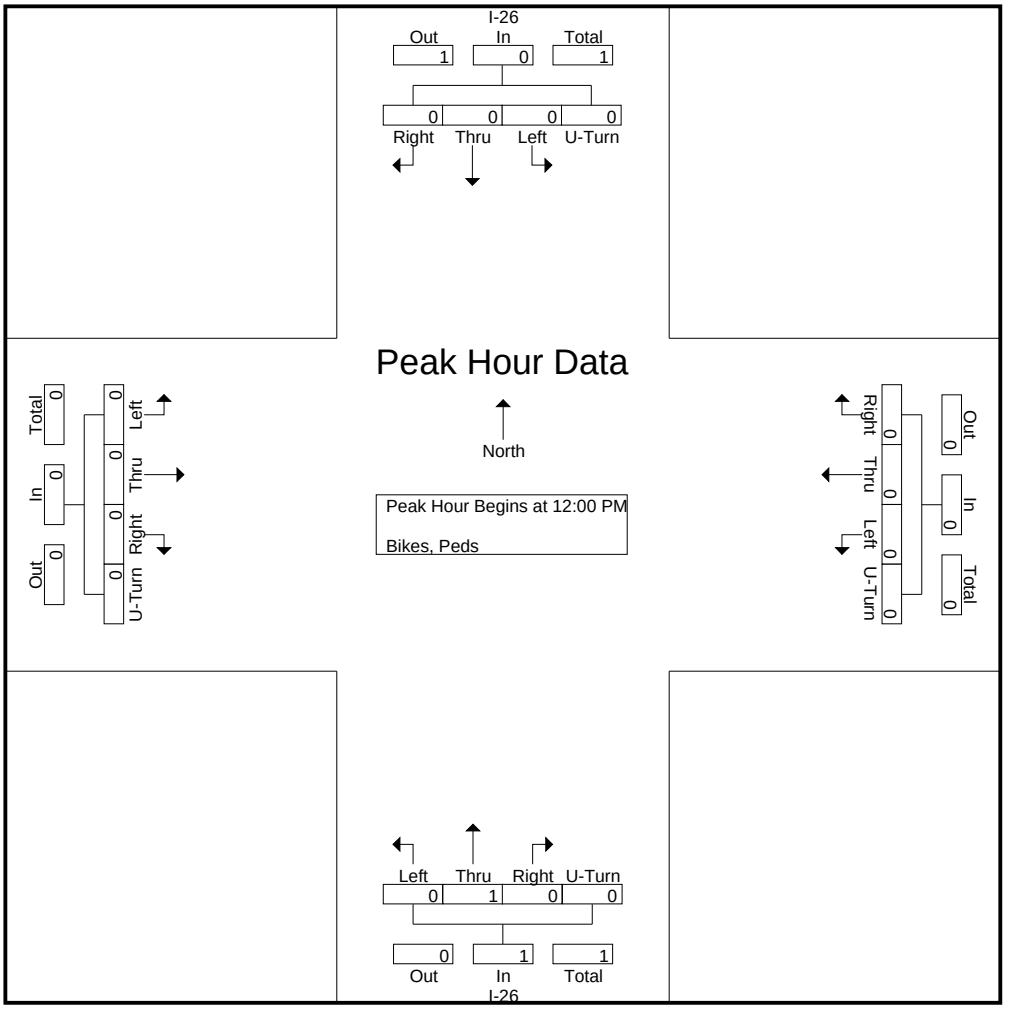

DocuSign Envelope ID: 5C03745C-4B01-4834-A65D-B77F558A4F46

Appendix E – Volume Calculations

DocuSign Envelope ID: 5C03745C-4B01-4834-A65D-B77F558A4F46

Volume Development Calculations

The forecast provides peak hour data. However, I need 15-minute volumes from 6:30 – 9:30 AM and 3:30 – 6:30 PM for FREEVAL. So, I compared count data for each peak 15-minute interval to the calculated peak 15-minute volume from forecast (peak hour with 0.9 PHF applied). Then, I multiplied the count volume by that ratio to calculate each 15-min interval. Separate curves were developed for each segment and for each peak.

Sample calculation for the 6:30 AM period for Segment 1 - I-26 southeast-bound, entering the model area (northwest of the NC 191 interchange):

6:30 AM
Count = **589**
Peak 15-minute volume from count (occurred at 7:30 AM) = **818**

AM peak hour (from forecast) = **3,550**
Peak 15-minute volume that would equate to a PHF of 0.9 = **986**
(The calculation to determine this value is as follows: 3,550 / 4X = 0.9, X=986)

I need the ratio of the peak 15-minute count to the forecast peak hour, adjusted to match a PHF of 0.9. 589/3,550 provides the ratio of the count data to the forecast. Next, I need to adjust to base the factor on 0.9 PHF rather than a single day count. So, I multiplied by the ratio of the value that equates to a peak hour factor of 0.9 from the forecast divided by the counted peak 15 minute period (986/818).

Full equation:
Factor to be applied to 6:30 AM count = (589/3,550) * (986/818) = 0.20000
0.2000 x 3,550 = 710
6:30 AM volume for FREEVAL = 710

This process is applied to each segment for each peak.

DocuSign Envelope ID: 5C03745C-4B01-4834-A65D-B77F558A4F46

	EB Segment 1 I-26/NC 191 North (West) of NC 191					EB Segment 2 I-26/NC 191 EB Off Ramp				
	Count	.09 PHF value	Breakout total	Initial curve	To make PHF work out to 0.90	Count	.09 PHF value	Breakout total	Initial curve	To make PHF work out to 0.90
06:30 AM	589			0.16592	0.2000	72			0.16941	0.1818
06:45 AM	542			0.15268	0.1841	73			0.17176	0.1843
07:00 AM	528			0.14873	0.1793	63			0.14824	0.1591
07:15 AM	704			0.19831	0.2391	57			0.13412	0.1439
07:30 AM	818	986	3550	0.23042	0.2778	83			0.19529	0.2096
07:45 AM	804			0.22648	0.2730	102			0.24000	0.2576
08:00 AM	671			0.18901	0.2279	91			0.21412	0.2298
08:15 AM	685			0.19296	0.2326	110	118	425	0.25882	0.2778
08:30 AM	664			0.18704	0.2255	82			0.19294	0.2071
08:45 AM	679			0.19127	0.2306	87			0.20471	0.2197
09:00 AM	584			0.16451	0.1983	67			0.15765	0.1692
09:15 AM	578			0.16282	0.1963	87			0.20471	0.2197
09:30 AM	614					85				
03:30 PM	625			0.1579	0.2135	83			0.1939	0.2040
03:45 PM	757			0.1913	0.2586	108			0.2523	0.2655
04:00 PM	723			0.1827	0.2470	112			0.2617	0.2753
04:15 PM	750			0.1895	0.2563	111			0.2593	0.2729
04:30 PM	696			0.1759	0.2378	99			0.2313	0.2434
04:45 PM	695			0.1756	0.2375	94			0.2196	0.2311
05:00 PM	738			0.1865	0.2522	113	119	428	0.2640	0.2778
05:15 PM	813	1099	3957	0.2055	0.2778	92			0.2150	0.2262
05:30 PM	710			0.1794	0.2426	88			0.2056	0.2163
05:45 PM	679			0.1716	0.2320	109			0.2547	0.2679
06:00 PM	562			0.1420	0.1920	78			0.1822	0.1917
06:15 PM	574			0.1451	0.1961	82			0.1916	0.2016

DocuSign Envelope ID: 5C03745C-4B01-4834-A65D-B77F558A4F46

EB Segment 4 I-26/NC 191 EB On ramp					WB Segment 6 I-26/NC 191 WB off ramp				
Count	.09 PHF value	Breakout total	Initial curve	To make PHF work out to 0.90	Count	.09 PHF value	Breakout total	Initial curve	To make PHF work out to 0.90
37			0.12542	0.1285	58			0.15223	0.1465
48			0.16271	0.1667	73			0.19160	0.1843
68			0.23051	0.2361	68			0.17848	0.1717
63			0.21356	0.2188	87			0.22835	0.2197
74			0.25085	0.2569	97			0.25459	0.2449
78			0.26441	0.2708	110	106	381	0.28871	0.2778
80	82	295	0.27119	0.2778	81			0.21260	0.2045
58			0.19661	0.2014	66			0.17323	0.1667
53			0.17966	0.1840	65			0.17060	0.1641
70			0.23729	0.2431	55			0.14436	0.1389
42			0.14237	0.1458	53			0.13911	0.1338
55			0.18644	0.1910	51			0.13386	0.1288
63					58				
102			0.24286	0.2673	82			0.21579	0.2190
85			0.20238	0.2227	85			0.22368	0.2270
93			0.22143	0.2437	70			0.18421	0.1870
65			0.15476	0.1703	75			0.19737	0.2003
83			0.19762	0.2175	67			0.17632	0.1790
86			0.20476	0.2254	88			0.23158	0.2350
106	117	420	0.25238	0.2778	104	106	380	0.27368	0.2778
98			0.23333	0.2568	99			0.26053	0.2644
85			0.20238	0.2227	76			0.20000	0.2030
60			0.14286	0.1572	57			0.15000	0.1522
61			0.14524	0.1599	61			0.16053	0.1629
50			0.11905	0.1310	53			0.13947	0.1416

DocuSign Envelope ID: 5C03745C-4B01-4834-A65D-B77F558A4F46

WB Segment 8 I-26/NC 191 WB On ramp					EB Segment 5 I-26 South (east) of NC 191				
Count	.09 PHF value	Breakout total	Initial curve	To make PHF work out to 0.90	Count	.09 PHF value	Breakout total	Initial curve	To make PHF work out to 0.90
21			0.06796	0.0897	554			0.16199	0.1902
33			0.10680	0.1410	517			0.15117	0.1775
39			0.12621	0.1667	533			0.15585	0.1830
51			0.16505	0.2179	710			0.20760	0.2438
63			0.20388	0.2692	809	950	3420	0.23655	0.2778
65	86	309	0.21036	0.2778	780			0.22807	0.2678
55			0.17799	0.2350	660			0.19298	0.2266
53			0.17152	0.2265	633			0.18509	0.2173
58			0.18770	0.2479	635			0.18567	0.2180
64			0.20712	0.2735	662			0.19357	0.2273
48			0.15534	0.2051	559			0.16345	0.1919
53			0.17152	0.2265	546			0.15965	0.1875
45					592				
95			0.20742	0.2443	644			0.16308	0.2184
83			0.18122	0.2135	734			0.18587	0.2489
99			0.21616	0.2546	704			0.17827	0.2388
108	127	458	0.23581	0.2778	704			0.17827	0.2388
69			0.15066	0.1775	680			0.17220	0.2306
86			0.18777	0.2212	687			0.17397	0.2330
99			0.21616	0.2546	731			0.18511	0.2479
103			0.22489	0.2649	819	1097	3949	0.20739	0.2778
99			0.21616	0.2546	707			0.17903	0.2398
80			0.17467	0.2058	630			0.15953	0.2137
81			0.17686	0.2083	545			0.13801	0.1848
62			0.13537	0.1595	542			0.13725	0.1838

DocuSign Envelope ID: 5C03745C-4B01-4834-A65D-B77F558A4F46

EB Segment 6 I-26/NC 146 EB off ramp					EB Segment 8 I-26 /NC 146 EB on ramp				
Count	.09 PHF value	Breakout total	Initial curve	To make PHF work out to 0.90	Count	.09 PHF value	Breakout total	Initial curve	To make PHF work out to 0.90
102			0.11359	0.1138	55			0.12222	0.1194
173			0.19265	0.1930	56			0.12444	0.1215
119			0.13252	0.1328	58			0.12889	0.1259
202			0.22494	0.2253	81			0.18000	0.1758
211			0.23497	0.2354	128	125	450	0.28444	0.2778
249	249	898	0.27728	0.2778	114			0.25333	0.2474
178			0.19822	0.1986	96			0.21333	0.2083
144			0.16036	0.1606	100			0.22222	0.2170
146			0.16258	0.1629	107			0.23778	0.2322
160			0.17817	0.1785	104			0.23111	0.2257
100			0.11136	0.1116	101			0.22444	0.2192
110			0.12249	0.1227	98			0.21778	0.2127
95					92				
123			0.16577	0.1964	129			0.19635	0.2226
165			0.22237	0.2634	145			0.22070	0.2502
139			0.18733	0.2219	131			0.19939	0.2260
174	206	742	0.23450	0.2778	138			0.21005	0.2381
168			0.22642	0.2682	112			0.17047	0.1932
138			0.18598	0.2203	158			0.24049	0.2726
128			0.17251	0.2043	148			0.22527	0.2553
161			0.21698	0.2570	161	183	657	0.24505	0.2778
144			0.19407	0.2299	138			0.21005	0.2381
151			0.20350	0.2411	126			0.19178	0.2174
99			0.13342	0.1580	114			0.17352	0.1967
115			0.15499	0.1836	105			0.15982	0.1812

DocuSign Envelope ID: 5C03745C-4B01-4834-A65D-B77F558A4F46

WB Segment 2 I-26/NC 146 WB off ramp					WB Segment 4 I-26 /NC 146 WB on ramp				
Count	.09 PHF value	Breakout total	Initial curve	To make PHF work out to 0.90	Count	.09 PHF value	Breakout total	Initial curve	To make PHF work out to 0.90
95			0.12056	0.1319	61			0.11575	0.1059
115			0.14594	0.1597	71			0.13472	0.1233
135			0.17132	0.1875	133			0.25237	0.2309
148			0.18782	0.2056	160	146	527	0.30361	0.2778
173			0.21954	0.2403	156			0.29602	0.2708
200	219	788	0.25381	0.2778	146			0.27704	0.2535
182			0.23096	0.2528	135			0.25617	0.2344
136			0.17259	0.1889	131			0.24858	0.2274
141			0.17893	0.1958	119			0.22581	0.2066
132			0.16751	0.1833	106			0.20114	0.1840
113			0.14340	0.1569	93			0.17647	0.1615
100			0.12690	0.1389	92			0.17457	0.1597
101					95				
112			0.18482	0.2222	158			0.21644	0.2660
118			0.19472	0.2341	135			0.18493	0.2273
110			0.18152	0.2183	146			0.20000	0.2458
140	168	606	0.23102	0.2778	111			0.15205	0.1869
110			0.18152	0.2183	147			0.20137	0.2475
103			0.16997	0.2044	101			0.13836	0.1700
119			0.19637	0.2361	165	203	730	0.22603	0.2778
126			0.20792	0.2500	159			0.21781	0.2677
110			0.18152	0.2183	128			0.17534	0.2155
103			0.16997	0.2044	148			0.20274	0.2492
116			0.19142	0.2302	137			0.18767	0.2306
83			0.13696	0.1647	79			0.10822	0.1330

DocuSign Envelope ID: 5C03745C-4B01-4834-A65D-B77F558A4F46

WB Segment 1
I-26 south (east) of NC 146

Count	.09 PHF value	Breakout total	Initial curve	To make PHF work out to 0.90
437			0.12612	0.1480
517			0.14921	0.1751
525			0.15152	0.1778
680			0.19625	0.2304
754			0.21760	0.2554
820	963	3465	0.23665	0.2778
710			0.20491	0.2405
653			0.18846	0.2212
642			0.18528	0.2175
585			0.16883	0.1982
559			0.16133	0.1894
544			0.15700	0.1843
554				
697			0.20226	0.2708
715	957	3446	0.20749	0.2778
664			0.19269	0.2580
709			0.20575	0.2754
620			0.17992	0.2409
650			0.18862	0.2525
662			0.19211	0.2572
658			0.19095	0.2556
619			0.17963	0.2405
600			0.17411	0.2331
559			0.16222	0.2172
554			0.16077	0.2152

DocuSign Envelope ID: 5C03745C-4B01-4834-A65D-B77F558A4F46

Validation Data

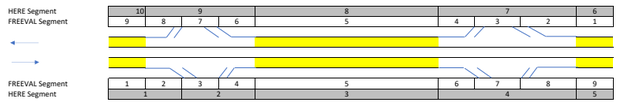

EB AM

	FV 1	FV 2	FV 1-2 Avg	HERE 1	Diff	%	FV 3	FV 4	FV 3-4 Avg	HERE 2	Diff	%	FV 5	HERE 3	Diff	%	FV 6	FV 7	FV 8	FV 6-7-8 avg	Here 4	Diff	%	FV 9	HERE 5		
6:30	62.2	57.4	60.9	60.6	0	0%	64.0	56.5	59.6	60.6	-1	-2%	63.3	63.4	0	0%	57.1	64.7	57.0	60.6	63.4	-3	-4%	64.3	64.5	0	0%
6:45	63.7	57.4	62.0	60.7	1	2%	64.0	57.0	59.8	60.7	-1	-1%	64.3	63.7	1	1%	56.5	64.7	57.7	60.6	63.7	-3	-5%	65.0	64.9	0	0%
7:00	64.1	57.5	62.2	60.5	2	3%	64.1	56.8	59.7	60.5	-1	-1%	64.0	63.7	0	1%	57.0	64.7	57.4	60.6	63.7	-3	-5%	64.8	65.0	0	0%
7:15	56.0	56.0	56.0	58.9	-3	-5%	59.2	53.7	55.9	58.9	-3	-5%	55.8	62.9	-7	-11%	55.8	63.8	55.9	59.5	62.9	-3	-5%	61.6	64.5	-3	-4%
7:30	49.6	49.6	49.6	53.1	-3	-7%	55.3	50.3	52.3	53.1	-1	-1%	50.3	60.5	-10	-17%	50.3	61.4	53.6	56.3	60.5	-4	-7%	55.5	64.0	-8	-13%
7:45	49.6	49.6	49.6	47.4	2	5%	56.5	51.5	53.5	47.4	6	13%	51.5	59.0	-8	-13%	51.5	63.2	55.0	57.8	59.0	-1	-2%	59.1	63.5	-4	-7%
8:00	54.6	54.6	54.6	51.3	3	6%	60.1	53.7	56.3	51.3	5	10%	56.0	59.3	-3	-6%	56.0	63.6	55.6	59.4	59.3	0	0%	60.7	63.1	-2	-4%
8:15	57.3	57.0	57.2	54.7	3	5%	62.3	55.3	58.1	54.7	3	6%	60.1	60.9	-1	-1%	56.7	64.3	56.0	60.0	60.9	-1	-1%	61.9	63.4	-2	-2%
8:30	58.6	57.3	58.2	55.5	3	5%	62.1	55.3	58.1	55.5	3	5%	60.1	61.5	-1	-2%	56.7	64.3	56.0	60.0	61.5	-1	-2%	61.7	63.8	-2	-3%
8:45	57.7	57.2	57.6	55.7	2	3%	61.7	54.8	57.6	55.7	2	3%	58.8	61.1	-2	-4%	56.6	64.1	55.8	59.8	61.1	-1	-2%	61.2	63.7	-2	-4%
9:00	62.4	57.4	61.0	57.0	4	7%	64.1	56.5	59.5	57.0	2	4%	63.2	61.8	1	2%	57.2	64.7	56.2	60.7	61.8	-1	-2%	63.3	64.0	-1	-1%
9:15	62.6	57.2	61.1	57.3	4	7%	64.0	56.7	59.6	57.3	2	4%	63.6	62.0	2	3%	57.1	64.7	56.8	60.5	62.0	-1	-2%	63.9	63.6	0	0%
Length	3937	1527					1038	1546					18851				1486	2500	1424					11231			

EB PM

	FV 1	FV 2	FV 1-2 Avg	HERE 1	Diff	%	FV 3	FV 4	FV 3-4 Avg	HERE 2	Diff	%	FV 5	HERE 3	Diff	%	FV 6	FV 7	FV 8	FV 6-7-8 avg	Here 4	Diff	%	FV 9	HERE 5		
3:30	56.2	56.2	56.2	47.8	8	18%	60.5	53.2	56.1	47.8	8	17%	54.8	57.5	-3	-5%	54.8	61.7	53.3	57.6	58	0	0%	54.7	57.5	-3	-5%
3:45	49.6	49.6	49.6	46.8	3	6%	56.5	50.5	52.9	46.8	6	13%	50.5	57.2	-7	-12%	50.5	60.7	51.7	55.5	57	-2	-3%	51.7	56.4	-5	-8%
4:00	49.6	49.6	49.6	47.4	2	5%	56.9	50.4	53.0	47.4	6	12%	50.4	56.6	-6	-11%	50.4	59.8	51.4	55.0	57	-2	-3%	51.4	56.5	-5	-9%
4:15	49.6	49.6	49.6	46.4	3	7%	56.7	52.1	54.0	46.4	8	16%	52.3	55.9	-4	-7%	52.3	62.0	53.2	57.0	56	1	2%	54.6	55.5	-1	-2%
4:30	49.6	49.6	49.6	45.7	4	8%	56.5	50.6	53.0	45.7	7	16%	50.6	54.6	-4	-7%	50.6	61.5	53.5	56.4	55	2	3%	55.4	54.2	1	2%
4:45	49.6	49.6	49.6	44.7	5	11%	56.2	50.0	52.5	44.7	8	17%	49.9	53.2	-3	-6%	43.3	22.6	53.0	36.3	53	-17	-32%	54.1	52.8	1	3%
5:00	39.2	35.0	38.0	44.5	-7	-15%	22.7	52.9	40.8	44.5	-4	-8%	39.1	52.3	-13	-25%	28.0	17.6	53.0	29.8	52	-22	-43%	54.2	53.0	1	2%
5:15	30.0	28.8	29.6	40.9	-11	-28%	21.6	53.0	40.4	40.9	-1	-1%	38.9	50.0	-11	-22%	33.7	17.4	53.0	31.2	50	-19	-37%	54.2	51.9	2	4%
5:30	31.3	30.5	31.1	39.4	-8	-21%	22.6	53.0	40.8	39.4	1	4%	35.0	48.9	-14	-28%	42.7	19.5	53.0	34.7	49	-14	-29%	54.2	51.8	2	5%
5:45	38.2	38.6	38.3	41.8	-4	-9%	25.0	53.0	41.7	41.8	0	0%	36.6	50.6	-14	-28%	54.2	26.4	53.0	41.0	51	-10	-19%	54.2	51.6	3	5%
6:00	32.6	45.3	36.2	47.1	-11	-23%	57.1	53.4	54.9	47.1	8	17%	43.9	52.4	-9	-16%	54.2	52.1	53.0	52.9	52	0	1%	54.2	53.5	1	1%
6:15	31.9	54.2	38.1	51.8	-14	-26%	59.4	54.0	56.2	51.8	4	9%	49.7	55.2	-6	-10%	54.2	64.6	53.9	58.9	55	4	7%	56.4	56.3	0	0%

WB AM

	FV 1	HERE 6	Diff	%	FV 2	FV 3	FV 4	FV 2-4 Avg	HERE 7	Diff	%	FV 5	HERE 8	Diff	%	FV6	FV7	FV8	FV 6-8 Avg	HERE 9	Diff	%	FV 9	HERE 10	Diff	%
6:30	65	63	2	3%	57	65	58	60.8	63	-3	-4%	65.0	62.0	3	5%	57.6	64.1	58.0	59.5	62.0	-2.6	-4%	64.2	61.7	2	4%
6:45	65	63	1	2%	57	65	58	60.6	63	-3	-4%	65.0	62.0	3	5%	57.5	64.1	57.7	59.3	62.0	-2.7	-4%	64.1	61.7	2	4%
7:00	64	64	1	1%	57	65	57	60.5	64	-3	-5%	64.7	62.4	2	4%	57.5	64.1	57.3	59.2	62.4	-3.2	-5%	64.1	61.9	2	4%
7:15	59	63	-4	-7%	57	64	55	59.6	63	-4	-6%	59.4	61.7	-2	-4%	57.3	62.6	55.4	58.0	61.7	-3.7	-6%	60.1	61.4	-1	-2%
7:30	54	61	-7	-11%	54	63	54	57.9	61	-3	-4%	56.6	59.6	-3	-5%	56.6	61.0	54.2	56.9	59.6	-2.8	-5%	57.2	60.6	-3	-6%
7:45	50	56	-7	-12%	50	62	53	56.0	56	0	0%	55.1	55.5	0	-1%	55.1	60.4	53.8	56.0	55.5	0.5	1%	56.2	59.5	-3	-6%
8:00	56	56	0	0%	56	64	55	59.4	56	4	6%	60.0	54.7	5	10%	57.4	62.8	55.4	58.1	54.7	3.3	6%	60.2	59.1	1	2%
8:15	60	57	3	6%	57	64	56	59.9	57	3	5%	61.3	55.5	6	10%	57.5	63.2	55.7	58.4	55.5	2.9	5%	61.0	59.2	2	3%
8:30	61	59	2	3%	57	65	56	60.1	59	1	2%	62.3	56.6	6	10%	57.5	63.9	56.0	58.6	56.6	2.0	4%	61.8	59.5	2	4%
8:45	63	60	3	5%	57	65	57	60.4	60	0	0%	64.0	57.9	6	11%	57.6	64.1	56.6	58.9	57.9	1.0	2%	63.3	59.8	3	6%
9:00	64	61	2	4%	57	65	57	60.5	61	-1	-1%	64.4	59.6	5	8%	57.6	64.1	56.9	59.1	59.6	-0.5	-1%	64.0	60.3	4	6%
9:15	64	62	2	3%	57	65	57	60.5	62	-2	-3%	64.4	60.5	4	7%	57.7	64.1	56.9	59.1	60.5	-1.4	-2%	64.0	60.3	4	6%
Length	10953	62.9013			1513	2408	1411					20760	1516			1516	1093	1529		1093	1529	1079				

WB PM

	FV 1	HERE 6	Diff	%	FV 2	FV 3	FV 4	FV 2-4 Avg	HERE 7	Diff	%	FV 5	HERE 8	Diff	%	FV6	FV7	FV8	FV 6-8 Avg	HERE 9	Diff	%	FV 9	HERE 10	Diff	%
3:30	45.0	51.2	-6	-12%	33.8	19.2	53.1	32	51.2	-19	-37%	45.6	48.5	-3	-6%	36.4	24.2	53.0	39.3	48.5	-9.2	-19%	54.1	56.4	-2	-4%
3:45	31.7	48.5	-17	-35%	29.0	17.8	53.1	30	48	-18	-37%	48.6	46.9	2	4%	29.7	22.3	53.0	36.4	46.9	-10.5	-22%	54.2	56.3	-2	-4%
4:00	30.6	48.2	-18	-36%	29.3	17.2	53.1	30	48	-18	-38%	42.2	46.1	-4	-8%	26.4	20.9	53.0	34.8	46.1	-11.3	-25%	54.2	55.6	-1	-3%
4:15	29.6	46.2	-17	-36%	41.8	25.6	53.1	37	46	-9	-19%	35.3	44.9	-10	-21%	25.6	20.2	53.0	34.3	44.9	-10.6	-24%	54.2	55.4	-1	-2%
4:30	31.2	44.9	-14	-31%	35.4	21.4	42.1	31	45	-14	-31%	36.7	44.8	-8	-18%	33.6	24.0	53.0	38.2	44.8	-6.6	-15%	54.2	55.3	-1	-2%
4:45	30.5	44.1	-14	-31%	39.6	23.6	40.4	33	44	-12	-26%	39.4	44.8	-5	-12%	31.0	22.1	53.0	36.8	44.8	-8.1	-18%	54.2	54.8	-1	-1%
5:00	32.1	44.6	-13	-28%	31.6	16.6	53.1	31	45	-14	-32%	37.6	45.2	-8	-17%	29.7	20.9	53.0	36.0	45.2	-9.2	-20%	54.2	55.1	-1	-2%
5:15	32.9	41.4	-8	-20%	26.8	16.1	53.1	29	41	-12	-30%	35.0	43.8	-9	-20%	28.6	20.6	53.0	35.5	43.8	-8.3	-19%	54.2	55.0	-1	-1%
5:30	33.2	41.7	-8	-20%	29.7	17.8	48.7	29	42	-12	-30%	35.2	43.8	-9	-20%	27.6	20.9	53.0	35.2	43.8	-8.6	-20%	54.2	54.6	0	-1%
5:45	28.7	45.4	-17	-37%	26.0	15.6	40.0	25	45	-20	-45%	37.1	45.8	-9	-19%	28.1	22.6	53.0	35.8	45.8	-10.0	-22%	54.2	55.0	-1	-1%
6:00	32.4	51.2	-19	-37%	31.2	17.6	53.1	31	51	-20	-40%	39.5	50.1	-11	-21%	30.0	22.6	53.0	36.5	50.1	-13.6	-27%	54.2	56.4	-2	-4%
6:15	30.7	55.6	-25	-45%	41.3	33.7	53.1	41	56	-15	-26%	39.6	52.8	-13	-25%	30.7	24.3	53.0	37.3	52.8	-15.6	-29%	54.2	57.8	-4	-6%

HERE Data

7:30 - 8:30 AM

Segment	Intersection	Miles	Direction	Link	Descr
125-05200	NC-191/EXIT 3	1.242	EB	1	I-26 EB from I-40 EB on-ramp to NC 191 EB off-ramp
125N05200	NC-191/EXIT 3	0.193	EB	2	I-26 EB from NC 191 EB off-ramp to NC 191 EB on-ramp
125-05199	NC-146/LONG S	4.169	EB	3	I-26 EB from NC 191 EB on-ramp to NC 146 EB off-ramp
125N05199	NC-146/LONG S	0.428	EB	4	I-26 EB from NC 146 EB off-ramp to NC 146 EB on-ramp
125-05198	NC-280/NEW A	2.69	EB	5	I-26 from NC-146 EB on-ramp to NC 280 EB on-ramp
125-05199	NC-146/LONG S	2.635	WB	6	I-26 WB from NC 280 WB on-ramp to NC 146 WB on-ramp
125P05199	NC-146/LONG S	0.464	WB	7	I-26 EWB from NC 146 EB off-ramp to NC 146 EB on-ramp
125+05200	NC-191/EXIT 3	4.466	WB	8	I-26 WB from NC 146 WB on-ramp to NC 191 bridge
125P05200	NC-191/EXIT 3	0.182	WB	9	I-26 WB from NC 191 bridge to NC 191 WB off-ramp
125+05201	I-40/EXIT 31A	0.797	WB	10	I-26 WB from NC 191 WB off-ramp to I-40 EB off-ramp

4:45 - 5:45 PM

Segment	Intersection	Miles	Direction	Link	Descr
125-05200	NC-191/EXIT 3	1.242	EB	1	I-26 EB from I-40 EB on-ramp to NC 191 EB off-ramp
125N05200	NC-191/EXIT 3	0.193	EB	2	I-26 EB from NC 191 EB off-ramp to NC 191 EB on-ramp
125-05199	NC-146/LONG S	4.169	EB	3	I-26 EB from NC 191 EB on-ramp to NC 146 EB off-ramp
125N05199	NC-146/LONG S	0.428	EB	4	I-26 EB from NC 146 EB off-ramp to NC 146 EB on-ramp
125-05198	NC-280/NEW AI	2.69	EB	5	I-26 from NC-146 EB on-ramp to NC 280 EB on-ramp
125-05199	NC-146/LONG S	2.635	WB	6	I-26 WB from NC 280 WB on-ramp to NC 146 WB off-ramp
125P05199	NC-146/LONG S	0.464	WB	7	I-26 WB from NC 146 EB off-ramp to NC 146 EB on-ramp
125+05200	NC-191/EXIT 3	4.466	WB	8	I-26 WB from NC 146 WB on-ramp to NC 191 bridge
125P05200	NC-191/EXIT 3	0.182	WB	9	I-26 WB from NC 191 bridge to NC 191 WB off-ramp
125+05201	I-40/EXIT 31A	0.797	WB	10	I-26 WB from NC 191 WB off-ramp to I-40 EB off-ramp

FREEVAL Data :

EB AM

Analysis Period	Seg. 1	Seg. 2	Seg. 3	Seg. 4	Seg. 5	Seg. 6	Seg. 7	Seg. 8	Seg. 9
#1 6:30 - 6:45	62.2	57.4	64.0	56.5	63.3	57.1	64.7	57.0	64.3
#2 6:45 - 7:00	63.7	57.4	64.0	57.0	64.3	56.5	64.7	57.7	65.0
#3 7:00 - 7:15	64.1	57.5	64.1	56.8	64.0	57.0	64.7	57.4	64.8
#4 7:15 - 7:30	56.0	56.0	59.2	53.7	55.8	55.8	63.8	55.9	61.6
#5 7:30 - 7:45	49.6	49.6	55.3	50.3	50.3	50.3	61.4	53.6	55.5
#6 7:45 - 8:00	49.6	49.6	56.5	51.5	51.5	51.5	63.2	55.0	59.1
#7 8:00 - 8:15	54.6	54.6	60.1	53.7	56.0	56.0	63.6	55.6	60.7
#8 8:15 - 8:30	57.3	57.0	62.3	55.3	60.1	56.7	64.3	56.0	61.9
#9 8:30 - 8:45	58.6	57.3	62.1	55.3	60.1	56.7	64.3	56.0	61.7
#10 8:45 - 9:00	57.7	57.2	61.7	54.8	58.8	56.6	64.1	55.8	61.2
#11 9:00 - 9:15	62.4	57.4	64.1	56.5	63.2	57.2	64.7	56.6	63.3
#12 9:15 - 9:30	62.6	57.2	64.0	56.7	63.6	57.1	64.7	56.8	63.9

WB AM

Analysis Period	Seg. 1	Seg. 2	Seg. 3	Seg. 4	Seg. 5	Seg. 6	Seg. 7	Seg. 8	Seg. 9
#1 6:30 - 6:45	65.0	57.1	64.7	58.0	65.0	57.6	64.1	58.0	64.2
#2 6:45 - 7:00	64.5	56.9	64.7	57.6	65.0	57.5	64.1	57.7	64.1
#3 7:00 - 7:15	64.4	56.7	64.7	57.3	64.7	57.5	64.1	57.3	64.1
#4 7:15 - 7:30	58.7	56.6	64.1	55.2	59.4	57.3	62.6	55.4	60.1
#5 7:30 - 7:45	53.8	53.8	62.7	54.1	56.6	56.6	61.0	54.2	57.2
#6 7:45 - 8:00	49.6	49.6	61.5	53.5	55.1	55.1	60.4	53.8	56.2
#7 8:00 - 8:15	56.0	56.0	63.9	55.4	60.0	57.4	62.8	55.4	60.2
#8 8:15 - 8:30	60.1	56.7	64.4	55.9	61.3	57.5	63.2	55.7	61.0
#9 8:30 - 8:45	60.7	56.6	64.6	56.3	62.3	57.5	63.9	56.0	61.8
#10 8:45 - 9:00	62.9	56.7	64.7	57.0	64.0	57.6	64.1	56.6	63.3
#11 9:00 - 9:15	63.7	56.9	64.7	57.1	64.4	57.6	64.1	56.9	64.0
#12 9:15 - 9:30	64.0	57.1	64.7	57.2	64.4	57.7	64.1	56.9	64.0

EB PM

Analysis Period	Seg. 1	Seg. 2	Seg. 3	Seg. 4	Seg. 5	Seg. 6	Seg. 7	Seg. 8	Seg. 9
#1 15:30 - 15	56.2	56.2	60.5	53.2	54.8	54.8	61.7	53.3	54.7
#2 15:45 - 16	49.6	49.6	56.5	50.5	50.5	50.5	60.7	51.7	51.7
#3 16:00 - 16	49.6	49.6	56.9	50.4	50.4	50.4	59.8	51.4	51.4
#4 16:15 - 16	49.6	49.6	56.7	52.1	52.3	52.3	62.0	53.2	54.6
#5 16:30 - 16	49.6	49.6	56.5	50.6	50.6	50.6	61.5	53.5	55.4
#6 16:45 - 17	49.6	49.6	56.2	50.0	49.9	43.3	22.6	53.0	54.1
#7 17:00 - 17	39.2	35.0	22.7	52.9	39.1	28.0	17.6	53.0	54.2
#8 17:15 - 17	30.0	28.8	21.6	53.0	38.9	33.7	17.4	53.0	54.2
#9 17:30 - 17	31.3	30.5	22.6	53.0	35.0	42.7	19.5	53.0	54.2
#10 17:45 - 1	38.2	38.6	25.0	53.0	36.6	54.2	26.4	53.0	54.2
#11 18:00 - 1	32.6	45.3	57.1	53.4	43.9	54.2	52.1	53.0	54.2
#12 18:15 - 1	31.9	54.2	59.4	54.0	49.7	54.2	64.6	53.9	56.4

WB PM

Analysis Period	Seg. 1	Seg. 2	Seg. 3	Seg. 4	Seg. 5	Seg. 6	Seg. 7	Seg. 8	Seg. 9
#1 15:30 - 15	45.0	33.8	19.2	53.1	45.6	36.4	24.2	53.0	54.1
#2 15:45 - 16	31.7	29.0	17.8	53.1	48.6	29.7	22.3	53.0	54.2
#3 16:00 - 16	30.6	29.3	17.2	53.1	42.2	26.4	20.9	53.0	54.2
#4 16:15 - 16	29.6	41.8	25.6	53.1	35.3	25.6	20.2	53.0	54.2
#5 16:30 - 16	31.2	35.4	21.4	42.1	36.7	33.6	24.0	53.0	54.2
#6 16:45 - 17	30.5	39.6	23.6	40.4	39.4	31.0	22.1	53.0	54.2
#7 17:00 - 17	32.1	31.6	16.6	53.1	37.6	29.7	20.9	53.0	54.2
#8 17:15 - 17	32.9	26.8	16.1	53.1	35.0	28.6	20.6	53.0	54.2
#9 17:30 - 17	33.2	29.7	17.8	48.7	35.2	27.6	20.9	53.0	54.2
#10 17:45 - 1	28.7	26.0	15.6	40.0	37.1	28.1	22.6	53.0	54.2
#11 18:00 - 1	32.4	31.2	17.6	53.1	39.5	30.0	22.6	53.0	54.2
#12 18:15 - 1	30.7	41.3	33.7	53.1	39.6	30.7	24.3	53.0	54.2

DocuSign Envelope ID: 5C03745C-4B01-4834-A65D-B77F558A4F46

Validation Summary

Speed Difference (FREEVAL-HERE)

AM Peak

6:30	2		-3		3		-3			2
6:45	2		-3		3		-3			1
7:00	2		-3		2		-3			1
7:15	-1		-4		-2		-4			-4
7:30	-3		-3		-3		-3			-7
7:45	-3		0		0		0			-7
8:00	1		3		5		4			0
8:15	2		3		6		3			3
8:30	2		2		6		1			2
8:45	3		1		6		0			3
9:00	4		-1		5		-1			2
9:15	4		-1		4		-2			2
HERE Segment	10		9		8		7			6
FREEVAL Segment	9	8	7	6	5	4	3	2		1

NC 191 ← WB NC 146

EB →

FREEVAL Segment	1	2	3	4	5	6	7	8		9
HERE Segment	1		2		3		4			5
6:30	0		-1		0		-3			0
6:45	1		-1		1		-3			0
7:00	2		-1		0		-3			0
7:15	-3		-3		-7		-3			-3
7:30	-3		-1		-10		-4			-8
7:45	2		6		-8		-1			-4
8:00	3		5		-3		0			-2
8:15	3		3		-1		-1			-2
8:30	3		3		-1		-1			-2
8:45	2		2		-2		-1			-2
9:00	4		2		1		-1			-1
9:15	4		2		2		-1			0

PM Peak

3:30	-2		-9		-3		-19			-6
3:45	-2		-10		2		-18			-17
4:00	-1		-11		-4		-18			-18
4:15	-1		-11		-10		-9			-17
4:30	-1		-7		-8		-14			-14
4:45	-1		-8		-5		-12			-14
5:00	-1		-9		-8		-14			-13
5:15	-1		-8		-9		-12			-8
5:30	0		-9		-9		-12			-8
5:45	-1		-10		-9		-20			-17
6:00	-2		-14		-11		-20			-19
6:15	-4		-16		-13		-15			-25
HERE Segment	10		9		8		7			6
FREEVAL Segment	9	8	7	6	5	4	3	2		1

NC 191 ← WB NC 146

EB →

FREEVAL Segment	1	2	3	4	5	6	7	8		9
HERE Segment	1		2		3		4			5
3:30	8		8		-3		0			-3
3:45	3		6		-7		-2			-5
4:00	2		6		-6		-2			-5
4:15	3		8		-4		1			-1
4:30	4		7		-4		2			1
4:45	5		8		-3		-17			1
5:00	-7		-4		-13		-22			1
5:15	-11		-1		-11		-19			2
5:30	-8		1		-14		-14			2
5:45	-4		0		-14		-10			3
6:00	-11		8		-9		0			1
6:15	-14		4		-6		4			0

Percent Difference (FREEVAL speed/HERE Speed) -1

AM Peak

6:30	3.9%		-4.1%		4.8%		-4.1%			2.6%
6:45	3.9%		-4.3%		4.9%		-4.4%			1.8%
7:00	3.5%		-5.2%		3.7%		-5.2%			1.0%
7:15	-2.1%		-6.0%		-3.7%		-5.6%			-7.0%
7:30	-5.7%		-4.6%		-5.1%		-4.3%			-11.0%
7:45	-5.6%		0.9%		-0.8%		-0.2%			-11.6%
8:00	1.9%		6.1%		9.5%		6.3%			0.2%
8:15	3.0%		5.2%		10.4%		5.3%			5.6%
8:30	3.9%		3.5%		9.9%		2.3%			3.2%
8:45	5.8%		1.8%		10.5%		0.5%			4.7%
9:00	6.1%		-0.8%		8.0%		-1.5%			3.7%
9:15	6.2%		-2.3%		6.6%		-2.6%			3.0%
HERE Segment	10		9		8		7			6
FREEVAL Segment	9	8	7	6	5	4	3	2		1

NC 191 ← WB NC 146

EB →

FREEVAL Segment	1	2	3	4	5	6	7	8		9
HERE Segment	1		2		3		4			5
6:30	0.4%		-1.7%		-0.2%		-4.5%			-0.3%
6:45	2.1%		-1.4%		0.9%		-4.9%			0.1%
7:00	2.8%		-1.3%		0.5%		-4.8%			-0.3%
7:15	-4.9%		-5.1%		-11.2%		-5.4%			-4.5%
7:30	-6.5%		-1.4%		-16.8%		-6.9%			-13.3%
7:45	4.6%		12.8%		-12.8%		-2.1%			-6.8%
8:00	6.4%		9.7%		-5.5%		0.2%			-3.8%
8:15	4.6%		6.3%		-1.3%		-1.3%			-2.4%
8:30	4.9%		4.6%		-2.2%		-2.3%			-3.2%
8:45	3.4%		3.4%		-3.8%		-2.0%			-3.8%
9:00	7.0%		4.4%		2.3%		-2.2%			-1.2%
9:15	6.6%		4.0%		2.5%		-2.4%			0.4%

PM Peak

3:30	-4.0%		-19.0%		-6.0%		-36.9%			-12.1%
3:45	-3.8%		-22.4%		3.6%		-37.5%			-34.6%
4:00	-2.7%		-24.6%		-8.4%		-37.6%			-36.5%
4:15	-2.1%		-23.6%		-21.3%		-18.9%			-35.9%
4:30	-2.0%		-14.6%		-18.1%		-31.3%			-30.6%
4:45	-1.1%		-18.0%		-12.2%		-26.1%			-30.9%
5:00	-1.8%		-20.3%		-16.7%		-31.6%			-28.1%
5:15	-1.5%		-18.9%		-20.2%		-30.1%			-20.4%
5:30	-0.8%		-19.7%		-19.8%		-29.5%			-20.3%
5:45	-1.4%		-21.8%		-19.0%		-44.9%			-36.8%
6:00	-3.9%		-27.1%		-21.2%		-39.8%			-36.8%
6:15	-6.2%		-29.5%		-25.0%		-26.3%			-44.8%
HERE Segment	10		9		8		7			6
FREEVAL Segment	9	8	7	6	5	4	3	2		1

NC 191 ← WB NC 146

EB →

FREEVAL Segment	1	2	3	4	5	6	7	8		9
HERE Segment	1		2		3		4			5
3:30	17.6%		17.4%		-4.7%		0.2%			-4.8%
3:45	6.0%		13.0%		-11.7%		-2.9%			-8.2%
4:00	4.6%		11.8%		-10.9%		-2.8%			-9.1%
4:15	6.9%		16.3%		-6.5%		1.9%			-1.5%
4:30	8.5%		15.8%		-7.2%		3.4%			2.3%
4:45	11.0%		17.4%		-6.1%		-31.8%			2.5%
5:00	-14.7%		-8.3%		-25.1%		-43.0%			2.2%
5:15	-27.6%		-1.3%		-22.2%		-37.5%			4.4%
5:30	-21.0%		3.5%		-28.4%		-29.1%			4.5%
5:45	-8.5%		-0.3%		-27.7%		-18.9%			5.0%
6:00	-23.1%		16.7%		-16.3%		0.9%			1.3%
6:15	-26.4%		8.5%		-10.1%		6.7%			0.2%

DocuSign Envelope ID: 5C03745C-4B01-4834-A65D-B77F558A4F46

2021 Existing AM

						AM													PM											
						SBR	SBT	SBL	WBR	WBT	WBL	NBR	NBT	NBL	EBR	EBT	EBL	SBR	SBT	SBL	WBR	WBT	WBL	NBR	NBT	NBL	EBR	EBT	EBL
NC 191	OUTPUT	I-26	NC 191	I-26	NC 191	378	3125	47	31	527	126	174	2813	207	169	591	278	386	3529	42	36	574	152	160	3155	220	268	738	422
NC 146	OUTPUT	I-26	NC 146	I-26	NC 146	186	2502	712	379	542	272	548	2677	240	178	811	148	190	3179	552	562	700	438	385	2840	221	219	610	168

Ramp			309		381										527		788												
	3122	2813	2813	2813	3194								3204	2677	2677	2677	3465												
Mainline	3122	2813	2813	2813	3194								3204	2677	2677	2677	3465												
Segment	9	8	7	6									5	4	3	2	1												
Segment	1	2	3	4	5									6	7	8	9												
Mainline	3550	3125	3125	3125	3420								3400	2502	2502	2502	2952												
AM Peak	3550	3125	3125	3125	3420								3400	2502	2502	2502	2952												
Ramp			425		295									898		450													

EB

15-min (in hour flow rate)	F1	1	F2	2	F4	4	F6	6	F8	8
6:30	0.200013583	2840	0.181818	309	0.128472	152	0.113788	409	0.119358	215
6:45	0.184053246	2614	0.184343	313	0.166667	197	0.192994	693	0.121528	219
7:00	0.179299104	2546	0.159091	270	0.236111	279	0.132753	477	0.125868	227
7:15	0.239065471	3395	0.143939	245	0.21875	258	0.225346	809	0.175781	316
7:30	0.277777778	3944	0.209596	356	0.256944	303	0.235386	846	0.277778	500
7:45	0.273023635	3877	0.257576	438	0.270833	320	0.277778	998	0.247396	445
8:00	0.227859277	3236	0.229798	391	0.277778	328	0.198572	713	0.208333	375
8:15	0.23261342	3303	0.277778	472	0.201389	238	0.160643	577	0.217014	391
8:30	0.225482206	3202	0.207071	352	0.184028	217	0.162874	585	0.232205	418
8:45	0.23057593	3274	0.219697	373	0.243056	287	0.178492	641	0.225694	406
9:00	0.198315675	2816	0.169192	288	0.145833	172	0.111557	401	0.219184	395
9:15	0.196278185	2787	0.219697	373	0.190972	225	0.122713	441	0.212674	383

WB

15-min (in hour flow rate)	F1	1	F2	2	F4	4	F6	6	F8	8
6:30	0.14803523	2052	0.131944	416	0.105903	223	0.146465	223	0.089744	111
6:45	0.175135501	2427	0.159722	503	0.123264	260	0.184343	281	0.141026	174
7:00	0.177845528	2465	0.1875	591	0.230903	487	0.171717	262	0.166667	206
7:15	0.230352304	3193	0.205556	648	0.277778	586	0.219697	335	0.217949	269
7:30	0.255420054	3540	0.240278	757	0.270833	571	0.244949	373	0.269231	333
7:45	0.277777778	3850	0.277778	876	0.253472	534	0.277778	423	0.277778	343
8:00	0.240514905	3334	0.252778	797	0.234375	494	0.204545	312	0.235043	291
8:15	0.221205962	3066	0.188889	595	0.227431	479	0.166667	254	0.226496	280
8:30	0.217479675	3014	0.195833	617	0.206597	436	0.164141	250	0.247863	306
8:45	0.198170732	2747	0.183333	578	0.184028	388	0.138889	212	0.273504	338
9:00	0.189363144	2625	0.156944	495	0.161458	340	0.133838	204	0.205128	254
9:15	0.184281843	2554	0.138889	438	0.159722	337	0.128788	196	0.226496	280

DocuSign Envelope ID: 5C03745C-4B01-4834-A65D-B77F558A4F46

2021 Existing PM

						AM												PM											
						SBR	SBT	SBL	WBR	WBT	WBL	NBR	NBT	NBL	EBR	EBT	EBL	SBR	SBT	SBL	WBR	WBT	WBL	NBR	NBT	NBL	EBR	EBT	EBL
NC 191	OUTPUT	I-26	NC 191	I-26	NC 191	378	3125	47	31	527	126	174	2813	207	169	591	278	386	3529	42	36	574	152	160	3155	220	268	738	422
NC 146	OUTPUT	I-26	NC 146	I-26	NC 146	186	2502	712	379	542	272	548	2677	240	178	811	148	190	3179	552	562	700	438	385	2840	221	219	610	168

Ramp			458		380										730		606	3446											
	3613	3155	3155	3155	3535									3570	2840	2840	2840	3446											
Mainline	3613	3155	3155	3155	3535									3570	2840	2840	2840	3446											
Segment	9	8	7	6										5	4	3	2	1											
Segment	1	2	3	4	5										6	7	8	9											
Mainline	3957	3529	3529	3529	3949									3921	3179	3179	3179	3836											
PM Peak	3957	3529	3529	3529	3949									3921	3179	3179	3179	3836											
Ramp			428		420										742		657												

EB

15-min (in hour flow rate)	F1	1	F2	2	F4	4	F6	6	F8	8
3:30	0.213543802	3380	0.204031	349	0.267296	449	0.19636	583	0.222567	585
3:45	0.258644253	4094	0.265487	455	0.222746	374	0.26341	782	0.250173	657
4:00	0.24702747	3910	0.27532	471	0.243711	409	0.221903	659	0.226018	594
4:15	0.256252563	4056	0.272861	467	0.170335	286	0.277778	824	0.238095	626
4:30	0.237802378	3764	0.243363	417	0.217505	365	0.268199	796	0.193237	508
4:45	0.237460708	3759	0.231072	396	0.225367	379	0.220307	654	0.272602	716
5:00	0.252152522	3991	0.277778	476	0.277778	467	0.204342	606	0.255349	671
5:15	0.277777778	4397	0.226155	387	0.256813	431	0.257024	763	0.277778	730
5:30	0.242585759	3840	0.216323	370	0.222746	374	0.229885	682	0.238095	626
5:45	0.231993987	3672	0.267945	459	0.157233	264	0.24106	715	0.217391	571
6:00	0.192018587	3039	0.19174	328	0.159853	269	0.158046	469	0.196687	517
6:15	0.196118628	3104	0.201573	345	0.131027	220	0.183589	545	0.181159	476

WB

15-min (in hour flow rate)	F1	1	F2	2	F4	4	F6	6	F8	8
3:30	0.270784771	3732	0.222222	539	0.265993	777	0.219017	333	0.244342	448
3:45	0.277777778	3829	0.234127	568	0.227273	664	0.22703	345	0.213477	391
4:00	0.257964258	3556	0.218254	529	0.245791	718	0.186966	284	0.25463	466
4:15	0.275446775	3797	0.277778	673	0.186869	546	0.200321	304	0.277778	509
4:30	0.240870241	3320	0.218254	529	0.247475	723	0.178953	272	0.177469	325
4:45	0.252525253	3481	0.204365	495	0.170034	496	0.235043	357	0.221193	405
5:00	0.257187257	3545	0.236111	572	0.277778	811	0.277778	422	0.25463	466
5:15	0.255633256	3524	0.25	606	0.267677	782	0.264423	402	0.264918	485
5:30	0.24048174	3315	0.218254	529	0.215488	629	0.202991	309	0.25463	466
5:45	0.233100233	3213	0.204365	495	0.249158	728	0.152244	231	0.205761	377
6:00	0.217171717	2993	0.230159	558	0.23064	673	0.162927	248	0.208333	382
6:15	0.215229215	2967	0.164683	399	0.132997	388	0.14156	215	0.159465	292

DocuSign Envelope ID: 5C03745C-4B01-4834-A65D-B77F558A4F46

2021 B AM

							AM													PM										
	Date volumes were entered						SBR	SBT	SBL	WBR	WBT	WBL	NBR	NBT	NBL	EBR	EBT	EBL	SBR	SBT	SBL	WBR	WBT	WBL	NBR	NBT	NBL	EBR	EBT	EBL
NC 191	6/10/2021	OUTPUT	I-26	NC 191	I-26	NC 191	306	3248	48	31	504	162	226	2925	115	90	555	217	310	3681	42	36	547	197	209	3292	121	147	705	337
HE-0001	6/10/2021						246	3356	0	0	0	0	0	3029	220	129	0	130	195	3806	0	0	0	0	0	3430	175	224	0	225
NC 146	6/10/2021	OUTPUT	I-26	NC 146	I-26	NC 146	185	2529	758	406	522	274	550	2714	226	168	780	148	190	3220	590	600	673	438	384	2876	208	207	586	168

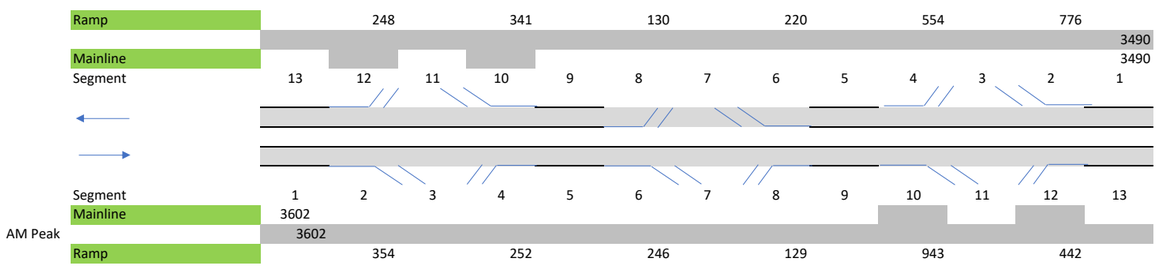

EB

15-min (in hour flow rate)	F1	1	F2	2	F4	4	F6	6	F8	8	F10	10	F12	12
6:30	0.200013583	2882	0.181818	257	0.128472	130	0.147803	145	0.123915	64	0.113788	429	0.119358	211
6:45	0.184053246	2652	0.184343	261	0.166667	168	0.188669	186	0.144097	74	0.192994	728	0.121528	215
7:00	0.179299104	2583	0.159091	225	0.236111	238	0.145922	144	0.18099	93	0.132753	501	0.125868	223
7:15	0.239065471	3444	0.143939	204	0.21875	221	0.184643	182	0.197266	102	0.225346	850	0.175781	311
7:30	0.277777778	4002	0.209596	297	0.256944	259	0.222491	219	0.267361	138	0.235386	888	0.277778	491
7:45	0.273023635	3934	0.257576	365	0.270833	273	0.267677	263	0.259115	134	0.277778	1048	0.247396	437
8:00	0.227859277	3283	0.229798	325	0.277778	280	0.214185	211	0.243056	125	0.198572	749	0.208333	368
8:15	0.23261342	3351	0.277778	393	0.201389	203	0.21921	216	0.209201	108	0.160643	606	0.217014	384
8:30	0.225482206	3249	0.207071	293	0.184028	186	0.184972	182	0.208116	107	0.162874	614	0.232205	411
8:45	0.23057593	3322	0.219697	311	0.243056	245	0.199094	196	0.234375	121	0.178492	673	0.225694	399
9:00	0.198315675	2857	0.169192	240	0.145833	147	0.140375	138	0.182509	94	0.111557	421	0.219184	388
9:15	0.196278185	2828	0.219697	311	0.190972	193	0.171205	168	0.201823	104	0.122713	463	0.212674	376

WB

15-min (in hour flow rate)	F1	1	F2	2	F4	4	F6	6	F8	8	F10	10	F12	12
6:30	0.14803523	2067	0.131944	410	0.105903	235	0.139205	123	0.097823	51	0.146465	200	0.089744	89
6:45	0.175135501	2445	0.159722	496	0.123264	273	0.172033	151	0.132145	69	0.184343	251	0.141026	140
7:00	0.177845528	2483	0.1875	582	0.230903	512	0.179609	158	0.198785	103	0.171717	234	0.166667	165
7:15	0.230352304	3216	0.205556	638	0.277778	616	0.212626	187	0.247863	129	0.219697	300	0.217949	216
7:30	0.255420054	3566	0.240278	746	0.270833	600	0.242614	214	0.270032	140	0.244949	334	0.269231	267
7:45	0.277777778	3878	0.277778	862	0.253472	562	0.277778	244	0.265625	138	0.277778	379	0.277778	276
8:00	0.240514905	3358	0.252778	785	0.234375	519	0.228662	201	0.234709	122	0.204545	279	0.235043	233
8:15	0.221205962	3088	0.188889	586	0.227431	504	0.177778	156	0.226963	118	0.166667	227	0.226496	225
8:30	0.217479675	3036	0.195833	608	0.206597	458	0.179987	158	0.22723	118	0.164141	224	0.247863	246
8:45	0.198170732	2766	0.183333	569	0.184028	408	0.161111	142	0.228766	119	0.138889	189	0.273504	271
9:00	0.189363144	2644	0.156944	487	0.161458	358	0.145391	128	0.183293	95	0.133838	183	0.205128	203
9:15	0.184281843	2573	0.138889	431	0.159722	354	0.133838	118	0.193109	100	0.128788	176	0.226496	225

DocuSign Envelope ID: 5C03745C-4B01-4834-A65D-B77F558A4F46

2021 B PM

						AM												PM											
						SBR	SBT	SBL	WBR	WBT	WBL	NBR	NBT	NBL	EBR	EBT	EBL	SBR	SBT	SBL	WBR	WBT	WBL	NBR	NBT	NBL	EBR	EBT	EBL
NC 191	OUTPUT	I-26	NC 191	I-26	NC 191	306	3248	48	31	504	162	226	2925	115	90	555	217	310	3681	42	36	547	197	209	3292	121	147	705	337
HE-0001						246	3356	0	0	0	0	0	3029	220	129	0	130	195	3806	0	0	0	0	0	3430	175	224	0	225
NC 146	OUTPUT	I-26	NC 146	I-26	NC 146	185	2529	758	406	522	274	550	2714	226	168	780	148	190	3220	590	600	673	438	384	2876	208	207	586	168

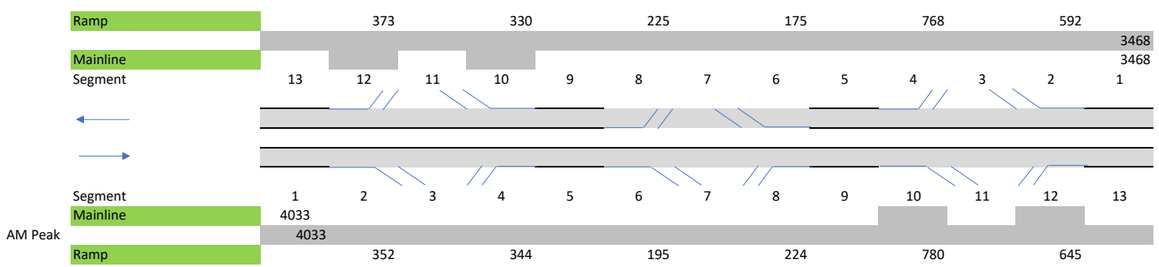

EB

15-min (in hour flow rate)	F1	1	F2	2	F4	4	F6	6	F8	8	F10	10	F12	12
6:30	0.200013583	3227	0.181818	256	0.128472	177	0.147803	115	0.123915	111	0.113788	355	0.119358	308
6:45	0.184053246	2969	0.184343	260	0.166667	229	0.188669	147	0.144097	129	0.192994	602	0.121528	314
7:00	0.179299104	2892	0.159091	224	0.236111	325	0.145922	114	0.18099	162	0.132753	414	0.125868	325
7:15	0.239065471	3857	0.143939	203	0.21875	301	0.184643	144	0.197266	177	0.225346	703	0.175781	454
7:30	0.277777778	4481	0.209596	295	0.256944	354	0.222491	174	0.267361	240	0.235386	734	0.277778	717
7:45	0.273023635	4404	0.257576	363	0.270833	373	0.267677	209	0.259115	232	0.277778	867	0.247396	638
8:00	0.227859277	3676	0.229798	324	0.277778	382	0.214185	167	0.243056	218	0.198572	620	0.208333	538
8:15	0.23261342	3753	0.277778	391	0.201389	277	0.21921	171	0.209201	187	0.160643	501	0.217014	560
8:30	0.225482206	3637	0.207071	292	0.184028	253	0.184972	144	0.208116	186	0.162874	508	0.232205	599
8:45	0.23057593	3720	0.219697	309	0.243056	334	0.199094	155	0.234375	210	0.178492	557	0.225694	582
9:00	0.198315675	3199	0.169192	238	0.145833	201	0.140375	109	0.182509	164	0.111557	348	0.219184	565
9:15	0.196278185	3166	0.219697	309	0.190972	263	0.171205	134	0.201823	181	0.122713	383	0.212674	549

WB

15-min (in hour flow rate)	F1	1	F2	2	F4	4	F6	6	F8	8	F10	10	F12	12
6:30	0.14803523	2054	0.131944	312	0.105903	325	0.139205	97	0.097823	88	0.146465	193	0.089744	134
6:45	0.175135501	2429	0.159722	378	0.123264	379	0.172033	120	0.132145	119	0.184343	243	0.141026	210
7:00	0.177845528	2467	0.1875	444	0.230903	709	0.179609	126	0.198785	179	0.171717	227	0.166667	249
7:15	0.230352304	3195	0.205556	487	0.277778	853	0.212626	149	0.247863	223	0.219697	290	0.217949	325
7:30	0.255420054	3543	0.240278	569	0.270833	832	0.242614	170	0.270032	243	0.244949	323	0.269231	402
7:45	0.277777778	3853	0.277778	658	0.253472	779	0.277778	194	0.265625	239	0.277778	367	0.277778	414
8:00	0.240514905	3336	0.252778	599	0.234375	720	0.228662	160	0.234709	211	0.204545	270	0.235043	351
8:15	0.221205962	3069	0.188889	447	0.227431	699	0.177778	124	0.226963	204	0.166667	220	0.226496	338
8:30	0.217479675	3017	0.195833	464	0.206597	635	0.179987	126	0.22723	205	0.164141	217	0.247863	370
8:45	0.198170732	2749	0.183333	434	0.184028	565	0.161111	113	0.228766	206	0.138889	183	0.273504	408
9:00	0.189363144	2627	0.156944	372	0.161458	496	0.145391	102	0.183293	165	0.133838	177	0.205128	306
9:15	0.184281843	2556	0.138889	329	0.159722	491	0.133838	94	0.193109	174	0.128788	170	0.226496	338

DocuSign Envelope ID: 5C03745C-4B01-4834-A65D-B77F558A4F46

2040 B AM

							AM												PM											
	Date volumes were entered						SBR	SBT	SBL	WBR	WBT	WBL	NBR	NBT	NBL	EBR	EBT	EBL	SBR	SBT	SBL	WBR	WBT	WBL	NBR	NBT	NBL	EBR	EBT	EBL
NC 191	DRAFT	OUTPUT	I-26	Brevard Rd	I-26	Brevard Rd	309	4563	69	44	670	244	342	4091	178	137	728	215	312	5161	61	51	724	295	317	4625	185	221	933	336
HE-0001	6/15/2021		I-26	NC 191 Cor	I-26	NC 191 Cor	452	4635	0	0	0	0	0	4182	376	266	0	289	385	5262	0	0	0	0	0	4734	321	410	0	442
NC 146		OUTPUT	I-26	Long Shoal	I-26	Long Shoal	267	3510	1103	595	668	372	744	3784	245	182	991	213	276	4478	862	880	856	589	515	4000	225	224	746	245

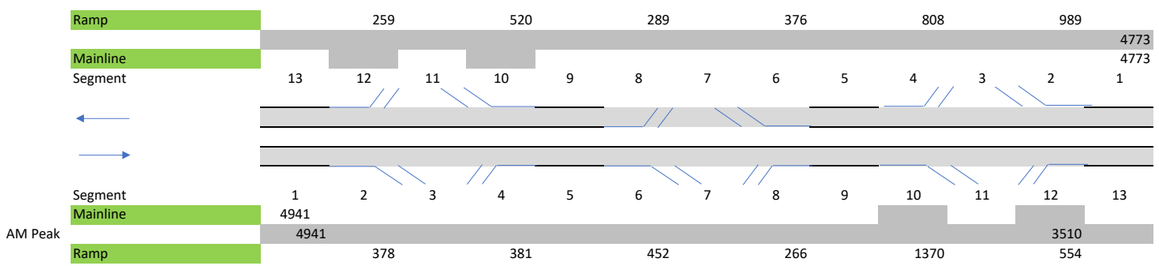

EB

15-min (in hour flow rate)	F1	1	F2	2	F4	4	F6	6	F8	8	F10	10	F12	12
6:30	0.200013583	3953	0.181818	275	0.128472	196	0.147803	267	0.123915	132	0.113788	624	0.119358	264
6:45	0.184053246	3638	0.184343	279	0.166667	254	0.188669	341	0.144097	153	0.192994	1058	0.121528	269
7:00	0.179299104	3544	0.159091	241	0.236111	360	0.145922	264	0.18099	193	0.132753	727	0.125868	279
7:15	0.239065471	4725	0.143939	218	0.21875	333	0.184643	334	0.197266	210	0.225346	1235	0.175781	390
7:30	0.277777778	5490	0.209596	317	0.256944	392	0.222491	402	0.267361	284	0.235386	1290	0.277778	616
7:45	0.273023635	5396	0.257576	389	0.270833	413	0.267677	484	0.259115	276	0.277778	1522	0.247396	548
8:00	0.227859277	4503	0.229798	347	0.277778	423	0.214185	387	0.243056	259	0.198572	1088	0.208333	462
8:15	0.23261342	4597	0.277778	420	0.201389	307	0.21921	396	0.209201	223	0.160643	880	0.217014	481
8:30	0.225482206	4456	0.207071	313	0.184028	280	0.184972	334	0.208116	221	0.162874	893	0.232205	515
8:45	0.23057593	4557	0.219697	332	0.243056	370	0.199094	360	0.234375	249	0.178492	978	0.225694	500
9:00	0.198315675	3920	0.169192	256	0.145833	222	0.140375	254	0.182509	194	0.111557	611	0.219184	486
9:15	0.196278185	3879	0.219697	332	0.190972	291	0.171205	310	0.201823	215	0.122713	672	0.212674	471

WB

15-min (in hour flow rate)	F1	1	F2	2	F4	4	F6	6	F8	8	F10	10	F12	12
6:30	0.14803523	2826	0.131944	522	0.105903	342	0.139205	209	0.097823	113	0.146465	305	0.089744	93
6:45	0.175135501	3344	0.159722	632	0.123264	398	0.172033	259	0.132145	153	0.184343	383	0.141026	146
7:00	0.177845528	3395	0.1875	742	0.230903	746	0.179609	270	0.198785	230	0.171717	357	0.166667	173
7:15	0.230352304	4398	0.205556	813	0.277778	898	0.212626	320	0.247863	287	0.219697	457	0.217949	226
7:30	0.255420054	4876	0.240278	951	0.270833	875	0.242614	365	0.270032	312	0.244949	509	0.269231	279
7:45	0.277777778	5303	0.277778	1099	0.253472	819	0.277778	418	0.265625	307	0.277778	578	0.277778	288
8:00	0.240514905	4592	0.252778	1000	0.234375	758	0.228662	344	0.234709	271	0.204545	425	0.235043	244
8:15	0.221205962	4223	0.188889	747	0.227431	735	0.177778	267	0.226963	262	0.166667	347	0.226496	235
8:30	0.217479675	4152	0.195833	775	0.206597	668	0.179987	271	0.22723	263	0.164141	341	0.247863	257
8:45	0.198170732	3783	0.183333	725	0.184028	595	0.161111	242	0.228766	264	0.138889	289	0.273504	283
9:00	0.189363144	3615	0.156944	621	0.161458	522	0.145391	219	0.183293	212	0.133838	278	0.205128	213
9:15	0.184281843	3518	0.138889	549	0.159722	516	0.133838	201	0.193109	223	0.128788	268	0.226496	235

DocuSign Envelope ID: 5C03745C-4B01-4834-A65D-B77F558A4F46

2040 B PM

						AM												PM											
						SBR	SBT	SBL	WBR	WBT	WBL	NBR	NBT	NBL	EBR	EBT	EBL	SBR	SBT	SBL	WBR	WBT	WBL	NBR	NBT	NBL	EBR	EBT	EBL
NC 191	OUTPUT	I-26	NC 191	I-26	NC 191	309	4563	69	44	670	244	342	4091	178	137	728	215	312	5161	61	51	724	295	317	4625	185	221	933	336
HE-0001						452	4635	0	0	0	0	0	4182	376	266	0	289	385	5262	0	0	0	0	0	4734	321	410	0	442
NC 146	OUTPUT	I-26	NC 146	I-26	NC 146	267	3510	1103	595	668	372	744	3784	245	182	991	213	276	4478	862	880	856	589	515	4000	225	224	746	245

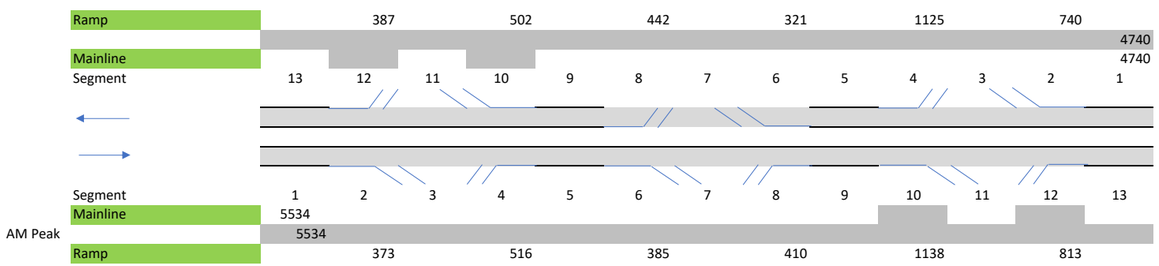

EB

15-min (in hour flow rate)	F1	1	F2	2	F4	4	F6	6	F8	8	F10	10	F12	12
6:30	0.200013583	4428	0.181818	271	0.128472	265	0.147803	228	0.123915	203	0.113788	518	0.119358	388
6:45	0.184053246	4074	0.184343	275	0.166667	344	0.188669	291	0.144097	236	0.192994	879	0.121528	395
7:00	0.179299104	3969	0.159091	237	0.236111	487	0.145922	225	0.18099	297	0.132753	604	0.125868	409
7:15	0.239065471	5292	0.143939	215	0.21875	452	0.184643	284	0.197266	324	0.225346	1026	0.175781	572
7:30	0.277777778	6149	0.209596	313	0.256944	530	0.222491	343	0.267361	438	0.235386	1071	0.277778	903
7:45	0.273023635	6044	0.257576	384	0.270833	559	0.267677	412	0.259115	425	0.277778	1264	0.247396	805
8:00	0.227859277	5044	0.229798	343	0.277778	573	0.214185	330	0.243056	399	0.198572	904	0.208333	678
8:15	0.23261342	5149	0.277778	414	0.201389	416	0.21921	338	0.209201	343	0.160643	731	0.217014	706
8:30	0.225482206	4991	0.207071	309	0.184028	380	0.184972	285	0.208116	341	0.162874	741	0.232205	755
8:45	0.23057593	5104	0.219697	328	0.243056	502	0.199094	307	0.234375	384	0.178492	812	0.225694	734
9:00	0.198315675	4390	0.169192	252	0.145833	301	0.140375	216	0.182509	299	0.111557	508	0.219184	713
9:15	0.196278185	4345	0.219697	328	0.190972	394	0.171205	264	0.201823	331	0.122713	559	0.212674	692

WB

15-min (in hour flow rate)	F1	1	F2	2	F4	4	F6	6	F8	8	F10	10	F12	12
6:30	0.14803523	2807	0.131944	391	0.105903	477	0.139205	179	0.097823	173	0.146465	294	0.089744	139
6:45	0.175135501	3321	0.159722	473	0.123264	555	0.172033	221	0.132145	234	0.184343	370	0.141026	218
7:00	0.177845528	3372	0.1875	555	0.230903	1039	0.179609	231	0.198785	351	0.171717	345	0.166667	258
7:15	0.230352304	4367	0.205556	608	0.277778	1250	0.212626	273	0.247863	438	0.219697	441	0.217949	337
7:30	0.255420054	4843	0.240278	711	0.270833	1219	0.242614	312	0.270032	477	0.244949	492	0.269231	417
7:45	0.277777778	5267	0.277778	822	0.253472	1141	0.277778	357	0.265625	470	0.277778	558	0.277778	430
8:00	0.240514905	4560	0.252778	748	0.234375	1055	0.228662	294	0.234709	415	0.204545	411	0.235043	364
8:15	0.221205962	4194	0.188889	559	0.227431	1023	0.177778	228	0.226963	401	0.166667	335	0.226496	351
8:30	0.217479675	4123	0.195833	580	0.206597	930	0.179987	231	0.22723	402	0.164141	330	0.247863	384
8:45	0.198170732	3757	0.183333	543	0.184028	828	0.161111	207	0.228766	404	0.138889	279	0.273504	423
9:00	0.189363144	3590	0.156944	465	0.161458	727	0.145391	187	0.183293	324	0.133838	269	0.205128	318
9:15	0.184281843	3494	0.138889	411	0.159722	719	0.133838	172	0.193109	341	0.128788	259	0.226496	351

DocuSign Envelope ID: 5C03745C-4B01-4834-A65D-B77F558A4F46

2045 NB AM

							AM												PM											
							SBR	SBT	SBL	WBR	WBT	WBL	NBR	NBT	NBL	EBR	EBT	EBL	SBR	SBT	SBL	WBR	WBT	WBL	NBR	NBT	NBL	EBR	EBT	EBL
NC 191	DRAFT	OUTPUT	I-26	Brevard Rd	I-26	Brevard Rd	596	4587	74	48	797	181	249	4134	295	241	895	439	609	5182	65	55	868	218	229	4631	314	384	1116	666
	6/15/2021																													
NC 146	6/15/2021	OUTPUT	I-26	Long Shoal	I-26	Long Shoal	288	3657	1033	548	812	389	785	3914	369	274	1219	230	294	4648	801	814	1049	627	551	4152	340	338	915	261

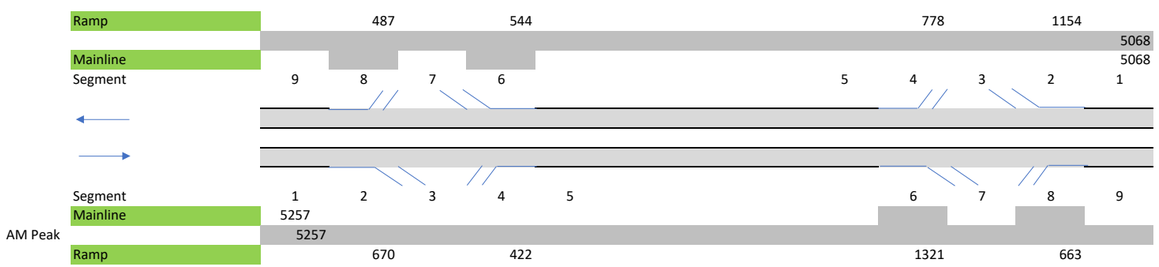

EB

15-min (in hour flow rate)	F1	1	F2	2	F4	4	F6	6	F8	8
6:30	0.200013583	4206	0.181818	487	0.128472	217	0.113788	601	0.119358	317
6:45	0.184053246	3870	0.184343	494	0.166667	281	0.192994	1020	0.121528	322
7:00	0.179299104	3770	0.159091	426	0.236111	399	0.132753	701	0.125868	334
7:15	0.239065471	5027	0.143939	386	0.21875	369	0.225346	1191	0.175781	466
7:30	0.277777778	5841	0.209596	562	0.256944	434	0.235386	1244	0.277778	737
7:45	0.273023635	5741	0.257576	690	0.270833	457	0.277778	1468	0.247396	656
8:00	0.227859277	4791	0.229798	616	0.277778	469	0.198572	1049	0.208333	553
8:15	0.23261342	4891	0.277778	744	0.201389	340	0.160643	849	0.217014	576
8:30	0.225482206	4741	0.207071	555	0.184028	311	0.162874	861	0.232205	616
8:45	0.23057593	4849	0.219697	589	0.243056	410	0.178492	943	0.225694	599
9:00	0.198315675	4170	0.169192	453	0.145833	246	0.111557	589	0.219184	581
9:15	0.196278185	4127	0.219697	589	0.190972	322	0.122713	648	0.212674	564

WB

15-min (in hour flow rate)	F1	1	F2	2	F4	4	F6	6	F8	8
6:30	0.14803523	3001	0.131944	609	0.105903	330	0.146465	319	0.089744	175
6:45	0.175135501	3550	0.159722	737	0.123264	384	0.184343	401	0.141026	275
7:00	0.177845528	3605	0.1875	866	0.230903	719	0.171717	374	0.166667	325
7:15	0.230352304	4670	0.205556	949	0.277778	864	0.219697	478	0.217949	425
7:30	0.255420054	5178	0.240278	1109	0.270833	843	0.244949	533	0.269231	524
7:45	0.277777778	5631	0.277778	1282	0.253472	789	0.277778	604	0.277778	541
8:00	0.240514905	4876	0.252778	1167	0.234375	729	0.204545	445	0.235043	458
8:15	0.221205962	4484	0.188889	872	0.227431	708	0.166667	363	0.226496	441
8:30	0.217479675	4409	0.195833	904	0.206597	643	0.164141	357	0.247863	483
8:45	0.198170732	4017	0.183333	846	0.184028	573	0.138889	302	0.273504	533
9:00	0.189363144	3839	0.156944	724	0.161458	502	0.133838	291	0.205128	400
9:15	0.184281843	3736	0.138889	641	0.159722	497	0.128788	280	0.226496	441

DocuSign Envelope ID: 5C03745C-4B01-4834-A65D-B77F558A4F46

2045NB PM

						AM													PM											
						SBR	SBT	SBL	WBR	WBT	WBL	NBR	NBT	NBL	EBR	EBT	EBL	SBR	SBT	SBL	WBR	WBT	WBL	NBR	NBT	NBL	EBR	EBT	EBL
NC 191	OUTPUT	I-26	NC 191	I-26	NC 191	596	4587	74	48	797	181	249	4134	295	241	895	439	609	5182	65	55	868	218	229	4631	314	384	1116	666
NC 146	OUTPUT	I-26	NC 146	I-26	NC 146	288	3657	1033	548	812	389	785	3914	369	274	1219	230	294	4648	801	814	1049	627	551	4152	340	338	915	261

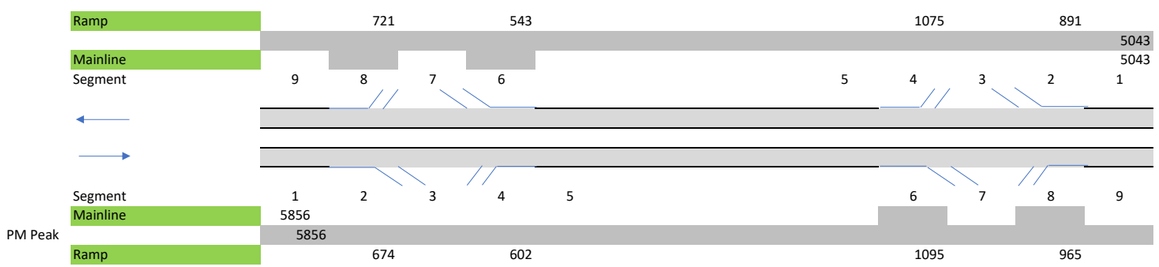

EB

15-min (in hour flow rate)	F1	1	F2	2	F4	4	F6	6	F8	8
3:30	0.213543802	5002	0.204031	550	0.267296	644	0.19636	860	0.222567	859
3:45	0.258644253	6058	0.265487	716	0.222746	536	0.26341	1154	0.250173	966
4:00	0.24702747	5786	0.27532	742	0.243711	587	0.221903	972	0.226018	872
4:15	0.256252563	6002	0.272861	736	0.170335	410	0.277778	1217	0.238095	919
4:30	0.237802378	5570	0.243363	656	0.217505	524	0.268199	1175	0.193237	746
4:45	0.237460708	5562	0.231072	623	0.225367	543	0.220307	965	0.272602	1052
5:00	0.252152522	5906	0.277778	749	0.277778	669	0.204342	895	0.255349	986
5:15	0.277777778	6507	0.226155	610	0.256813	618	0.257024	1126	0.277778	1072
5:30	0.242585759	5682	0.216323	583	0.222746	536	0.229885	1007	0.238095	919
5:45	0.231993987	5434	0.267945	722	0.157233	379	0.24106	1056	0.217391	839
6:00	0.192018587	4498	0.19174	517	0.159853	385	0.158046	692	0.196687	759
6:15	0.196118628	4594	0.201573	543	0.131027	316	0.183589	804	0.181159	699

WB

15-min (in hour flow rate)	F1	1	F2	2	F4	4	F6	6	F8	8
3:30	0.270784771	5462	0.222222	792	0.265993	1144	0.219017	476	0.244342	705
3:45	0.277777778	5603	0.234127	834	0.227273	977	0.22703	493	0.213477	616
4:00	0.257964258	5204	0.218254	778	0.245791	1057	0.186966	406	0.25463	734
4:15	0.275446775	5556	0.277778	990	0.186869	804	0.200321	435	0.277778	801
4:30	0.240870241	4859	0.218254	778	0.247475	1064	0.178953	389	0.177469	512
4:45	0.252525253	5094	0.204365	728	0.170034	731	0.235043	511	0.221193	638
5:00	0.257187257	5188	0.236111	842	0.277778	1194	0.277778	603	0.25463	734
5:15	0.255633256	5157	0.25	891	0.267677	1151	0.264423	574	0.264918	764
5:30	0.24048174	4851	0.218254	778	0.215488	927	0.202991	441	0.25463	734
5:45	0.233100233	4702	0.204365	728	0.249158	1071	0.152244	331	0.205761	593
6:00	0.217171717	4381	0.230159	820	0.23064	992	0.162927	354	0.208333	601
6:15	0.215229215	4342	0.164683	587	0.132997	572	0.14156	307	0.159465	460

DocuSign Envelope ID: 5C03745C-4B01-4834-A65D-B77F558A4F46

2045 B AM

	Date volumes were entered						AM SBR	SBT	SBL	WBR	WBT	WBL	NBR	NBT	NBL	EBR	EBT	EBL	PM SBR	SBT	SBL	WBR	WBT	WBL	NBR	NBT	NBL	EBR	EBT	EBL
NC 191	DRAFT	OUTPUT	I-26	Brevard Rd	I-26	Brevard Rd	310	4909	74	47	714	265	373	4398	194	149	773	214	313	5551	66	55	771	321	345	4976	202	241	993	336
HE-0001	6/15/2021		I-26	NC 191 Cor	I-26	NC 191 Cor	506	4972	0	0	0	0	0	4486	417	302	0	331	435	5645	0	0	0	0	0	5077	360	459	0	499
NC 146		OUTPUT	I-26	Long Shoal	I-26	Long Shoal	288	3768	1194	645	707	398	795	4065	250	186	1046	230	298	4809	934	954	904	629	550	4296	229	228	788	265

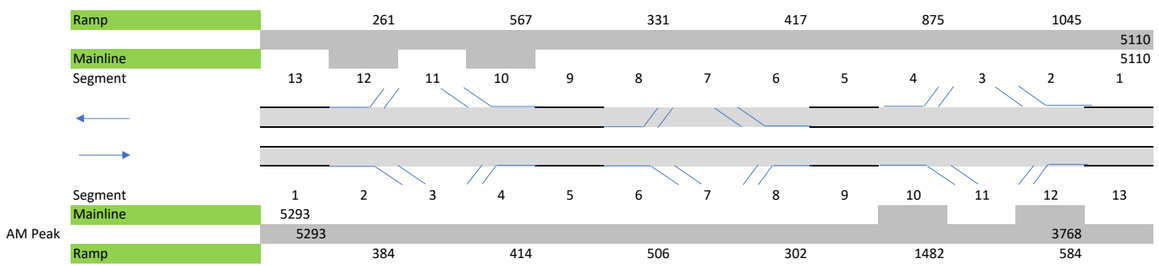

EB

15-min (in hour flow rate)	F1	1	F2	2	F4	4	F6	6	F8	8	F10	10	F12	12
6:30	0.200013583	4235	0.181818	279	0.128472	213	0.147803	299	0.123915	150	0.113788	675	0.119358	279
6:45	0.184053246	3897	0.184343	283	0.166667	276	0.188669	382	0.144097	174	0.192994	1144	0.121528	284
7:00	0.179299104	3796	0.159091	244	0.236111	391	0.145922	295	0.18099	219	0.132753	787	0.125868	294
7:15	0.239065471	5061	0.143939	221	0.21875	362	0.184643	374	0.197266	238	0.225346	1336	0.175781	411
7:30	0.277777778	5881	0.209596	322	0.256944	426	0.222491	450	0.267361	323	0.235386	1395	0.277778	649
7:45	0.273023635	5780	0.257576	396	0.270833	449	0.267677	542	0.259115	313	0.277778	1647	0.247396	578
8:00	0.227859277	4824	0.229798	353	0.277778	460	0.214185	434	0.243056	294	0.198572	1177	0.208333	487
8:15	0.23261342	4925	0.277778	427	0.201389	334	0.21921	444	0.209201	253	0.160643	952	0.217014	507
8:30	0.225482206	4774	0.207071	318	0.184028	305	0.184972	374	0.208116	251	0.162874	966	0.232205	542
8:45	0.23057593	4882	0.219697	337	0.243056	403	0.199094	403	0.234375	283	0.178492	1058	0.225694	527
9:00	0.198315675	4199	0.169192	260	0.145833	242	0.140375	284	0.182509	220	0.111557	661	0.219184	512
9:15	0.196278185	4156	0.219697	337	0.190972	316	0.171205	347	0.201823	244	0.122713	727	0.212674	497

WB

15-min (in hour flow rate)	F1	1	F2	2	F4	4	F6	6	F8	8	F10	10	F12	12
6:30	0.14803523	3026	0.131944	552	0.105903	371	0.139205	232	0.097823	130	0.146465	332	0.089744	94
6:45	0.175135501	3580	0.159722	668	0.123264	431	0.172033	287	0.132145	175	0.184343	418	0.141026	147
7:00	0.177845528	3635	0.1875	784	0.230903	808	0.179609	300	0.198785	263	0.171717	389	0.166667	174
7:15	0.230352304	4708	0.205556	859	0.277778	972	0.212626	355	0.247863	328	0.219697	498	0.217949	228
7:30	0.255420054	5221	0.240278	1004	0.270833	948	0.242614	405	0.270032	358	0.244949	556	0.269231	281
7:45	0.277777778	5678	0.277778	1161	0.253472	887	0.277778	463	0.265625	352	0.277778	630	0.277778	290
8:00	0.240514905	4916	0.252778	1057	0.234375	820	0.228662	381	0.234709	311	0.204545	464	0.235043	245
8:15	0.221205962	4521	0.188889	790	0.227431	796	0.177778	297	0.226963	300	0.166667	378	0.226496	236
8:30	0.217479675	4445	0.195833	819	0.206597	723	0.179987	300	0.22723	301	0.164141	372	0.247863	259
8:45	0.198170732	4051	0.183333	766	0.184028	644	0.161111	269	0.228766	303	0.138889	315	0.273504	286
9:00	0.189363144	3871	0.156944	656	0.161458	565	0.145391	243	0.183293	243	0.133838	304	0.205128	214
9:15	0.184281843	3767	0.138889	581	0.159722	559	0.133838	223	0.193109	256	0.128788	292	0.226496	236

DocuSign Envelope ID: 5C03745C-4B01-4834-A65D-B77F558A4F46

2045 B PM

						AM													PM										
						SBR	SBT	SBL	WBR	WBT	WBL	NBR	NBT	NBL	EBR	EBT	EBL	SBR	SBT	SBL	WBR	WBT	WBL	NBR	NBT	NBL	EBR	EBT	EBL
NC 191	OUTPUT	I-26	NC 191	I-26	NC 191	310	4909	74	47	714	265	373	4398	194	149	773	214	313	5551	66	55	771	321	345	4976	202	241	993	336
HE-0001						506	4972	0	0	0	0	0	4486	417	302	0	331	435	5645	0	0	0	0	0	5077	360	459	0	499
NC 146	OUTPUT	I-26	NC 146	I-26	NC 146	288	3768	1194	645	707	398	795	4065	250	186	1046	230	298	4809	934	954	904	629	550	4296	229	228	788	265

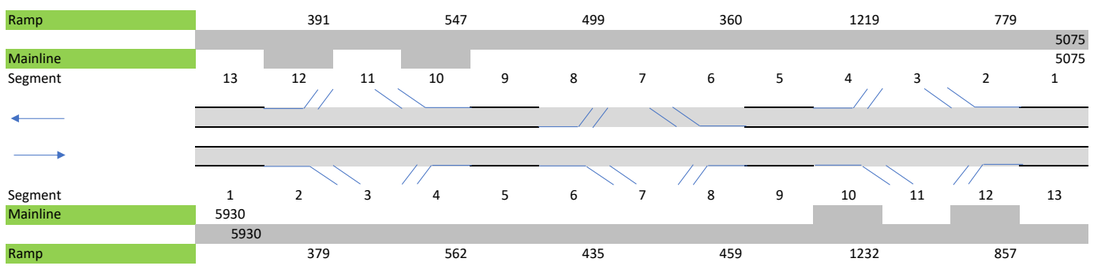

EB

15-min (in hour flow rate)	F1	1	F2	2	F4	4	F6	6	F8	8	F10	10	F12	12
6:30	0.200013583	4744	0.181818	276	0.128472	289	0.147803	257	0.123915	228	0.113788	561	0.119358	409
6:45	0.184053246	4366	0.184343	279	0.166667	375	0.188669	328	0.144097	265	0.192994	951	0.121528	417
7:00	0.179299104	4253	0.159091	241	0.236111	531	0.145922	254	0.18099	332	0.132753	654	0.125868	431
7:15	0.239065471	5671	0.143939	218	0.21875	492	0.184643	321	0.197266	362	0.225346	1111	0.175781	603
7:30	0.277777778	6589	0.209596	318	0.256944	578	0.222491	387	0.267361	491	0.235386	1160	0.277778	952
7:45	0.273023635	6476	0.257576	390	0.270833	609	0.267677	466	0.259115	476	0.277778	1369	0.247396	848
8:00	0.227859277	5405	0.229798	348	0.277778	624	0.214185	373	0.243056	446	0.198572	979	0.208333	714
8:15	0.23261342	5518	0.277778	421	0.201389	453	0.21921	381	0.209201	384	0.160643	792	0.217014	744
8:30	0.225482206	5348	0.207071	314	0.184028	414	0.184972	322	0.208116	382	0.162874	803	0.232205	796
8:45	0.23057593	5469	0.219697	333	0.243056	546	0.199094	346	0.234375	430	0.178492	880	0.225694	774
9:00	0.198315675	4704	0.169192	256	0.145833	328	0.140375	244	0.182509	335	0.111557	550	0.219184	751
9:15	0.196278185	4656	0.219697	333	0.190972	429	0.171205	298	0.201823	371	0.122713	605	0.212674	729

WB

15-min (in hour flow rate)	F1	1	F2	2	F4	4	F6	6	F8	8	F10	10	F12	12
6:30	0.14803523	3005	0.131944	411	0.105903	516	0.139205	200	0.097823	195	0.146465	320	0.089744	140
6:45	0.175135501	3555	0.159722	498	0.123264	601	0.172033	248	0.132145	264	0.184343	403	0.141026	221
7:00	0.177845528	3610	0.1875	584	0.230903	1126	0.179609	259	0.198785	397	0.171717	376	0.166667	261
7:15	0.230352304	4676	0.205556	641	0.277778	1354	0.212626	306	0.247863	495	0.219697	481	0.217949	341
7:30	0.255420054	5185	0.240278	749	0.270833	1321	0.242614	349	0.270032	539	0.244949	536	0.269231	421
7:45	0.277777778	5639	0.277778	866	0.253472	1236	0.277778	400	0.265625	530	0.277778	608	0.277778	434
8:00	0.240514905	4882	0.252778	788	0.234375	1143	0.228662	329	0.234709	468	0.204545	448	0.235043	368
8:15	0.221205962	4490	0.188889	589	0.227431	1109	0.177778	256	0.226963	453	0.166667	365	0.226496	354
8:30	0.217479675	4415	0.195833	610	0.206597	1007	0.179987	259	0.22723	454	0.164141	359	0.247863	388
8:45	0.198170732	4023	0.183333	571	0.184028	897	0.161111	232	0.228766	457	0.138889	304	0.273504	428
9:00	0.189363144	3844	0.156944	489	0.161458	787	0.145391	209	0.183293	366	0.133838	293	0.205128	321
9:15	0.184281843	3741	0.138889	433	0.159722	779	0.133838	193	0.193109	385	0.128788	282	0.226496	354

DocuSign Envelope ID: 5C03745C-4B01-4834-A65D-B77F558A4F46

Appendix F – FREEVAL Segment Length Calculations

DocuSign Envelope ID: 5C03745C-4B01-4834-A65D-B77F558A4F46

Southeast-bound Calcs

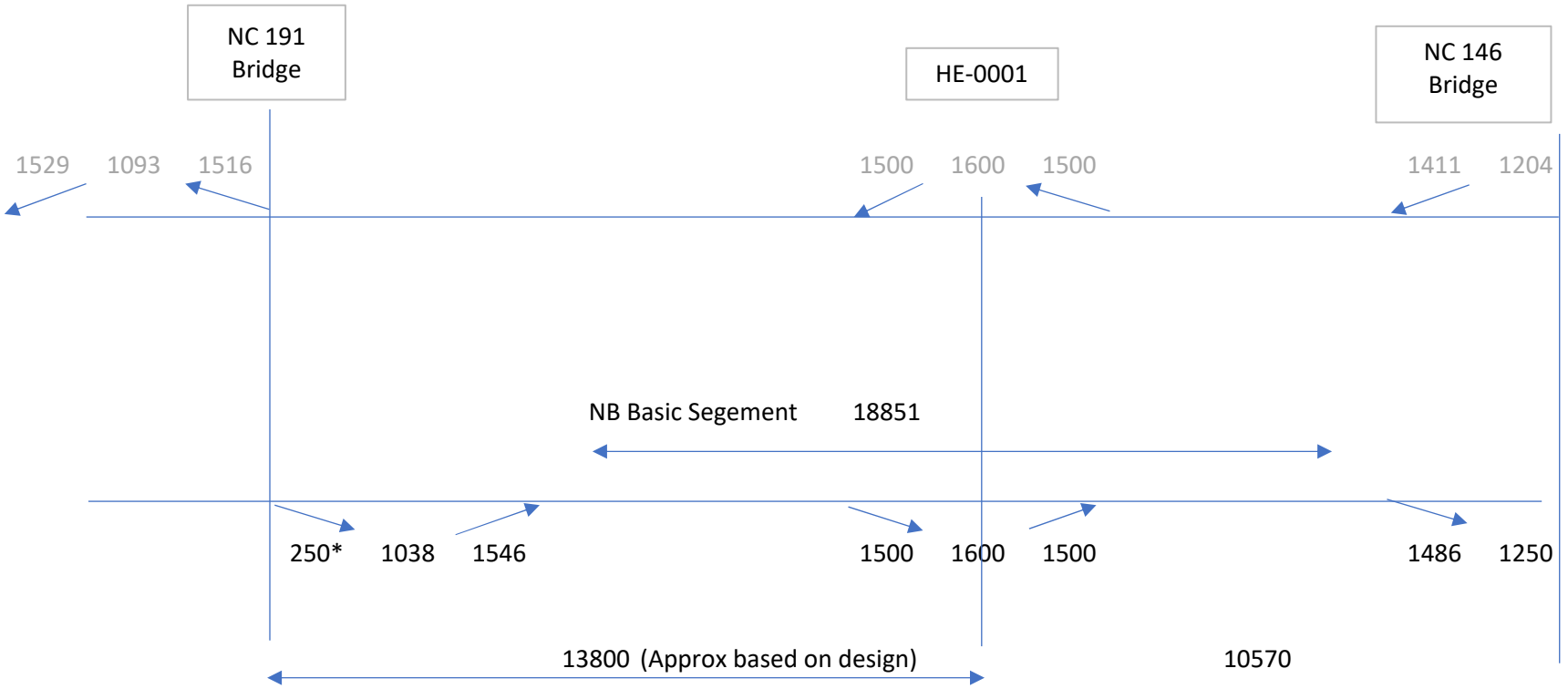

EB Basic Segment (NC 191 to HE-0001) Equals measured distance between bridges minus other segments
=13800 - 250 -1038 - 1546 - 1500 - 800
Rounded Distance 8700 Feet

EB Basic Segment (HE-0001 to NC 146) Equals NB basic segment minus new interchange segments
=18851 - 8700 -1500 - 1600 - 1500
Rounded Distance 5550 Feet

HE-0001 I-26 Interchange Access Report	
MAF	6/14/2021
MRR	6/14/2021
Distances used for adding HE-0001 Interchange for FREEVAL	

* Full length is 1,513 Feet. The 250 foot distance is from bridge.

DocuSign Envelope ID: 5C03745C-4B01-4834-A65D-B77F558A4F46

Northwest-bound Calcs

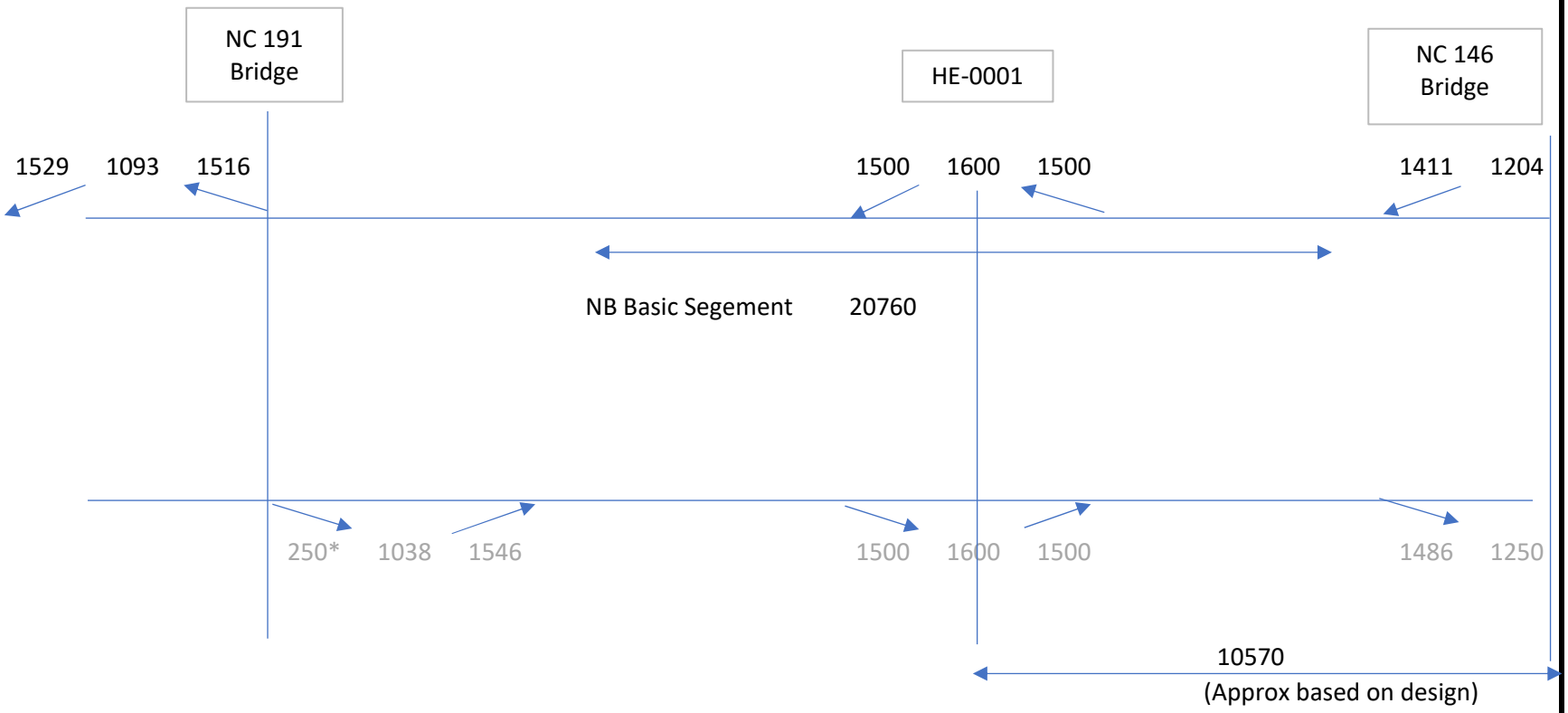

WB Basic Segment (HE-0001 to NC 146) Equals measured distance between bridges minus other segments
=10570 -(0.5*2408)-1411 - 1500 - (0.5*1600)
Rounded Distance **5700 Feet**

WB Basic Segment (NC 191 to HE-0001) Equals NB basic segment minus new interchange segments
=20760 - 5700 -1500 - 1600 - 1500
Rounded Distance **10500 Feet**

HE-0001 I-26 Interchange Access Report	
MAF	6/14/2021
MRR	6/14/2021
Distances used for adding HE-0001 Interchange for FREEVAL	

* Full length is 1,513 Feet. The 250 foot distance is from bridge.

DocuSign Envelope ID: 5C03745C-4B01-4834-A65D-B77F558A4F46

Appendix G – Signal Plans and Timing Plans

DocuSign Envelope ID: 5C03745C-4B01-4834-A65D-B77F558A4F46

PROJECT REFERENCE NO.	SHEET NO.
U-4715 B	Sig. 235.0

THIS PAGE INTENTIONALLY LEFT BLANK IN ANTICIPATION OF FUTURE SIGNAL INSTALLED UNDER I-5504.

DOCUMENT NOT CONSIDERED FINAL UNLESS ALL SIGNATURES COMPLETED

Prepared In the Offices of:
Transportation Mobility and Safety Division
Signal Design Section
750 N.Greenfield Pkwy.Garner,NC 27529

NC 191 (Brevard Rd.)
at
Pet-Co Entrance

Division 13 Buncombe County Asheville

PLAN DATE:	November 2016	REVIEWED BY:	
PREPARED BY:	R.N. Zinser	REVIEWED BY:	

SCALE 0 N/A N/A

REVISIONS	INIT.	DATE

SIG. INVENTORY NO. I3-1283

17-NOV-2016 10:54
S:*TISAS*TIS Signals\Signal Design Section\Eastern Region\Div-13\U-4715B (Asheville Signal System)\Signal Designs*13-1283*I31283_sig_blank_2016mod.dgn
rnzinser

DocuSign Envelope ID: 5C03745C-4B01-4834-A65D-B77F558A4F46

1283 - 13-1283: NC 191/Brevard Rd @ PETCO
B - Scheduling Events 1-100
5/21/2021 4:40 PM

Event #	Event Type	Event Details	Pri LMH	Start Date MM	Start Date DD	Stop Date MM	Stop Date DD	Start Time HH	Start Time MM	Stop Time HH	Stop Time MM	DOW Enabled 1 2 3 4 5 6 7	Del When Done	Cont	Event Groups Assigned 1 2 3 4 5 6 7 8 9 10 11 12 13 14 15 16
1	Coordination Plan	1-1	L	1	1	12	31	7	0	9	15	2 3 4 5 6	N	N	
2	Coordination Plan	2-1	L	1	1	12	31	9	15	11	30	2 3 4 5 6	N	N	
3	Coordination Plan	3-1	L	1	1	12	31	11	30	14	45	2 3 4 5 6	N	N	
4	Coordination Plan	4-1	L	1	1	12	31	14	45	18	30	2 3 4 5 6	N	N	
5	Coordination Plan	2-1	L	1	1	12	31	18	30	20	0	2 3 4 5 6	N	N	
6	None			0	0	0	0	0	0	0	0		N	N	
7	None			0	0	0	0	0	0	0	0		N	N	
8	None			0	0	0	0	0	0	0	0		N	N	
9	None			0	0	0	0	0	0	0	0		N	N	
10	None			0	0	0	0	0	0	0	0		N	N	
11	None			0	0	0	0	0	0	0	0		N	N	
12	None			0	0	0	0	0	0	0	0		N	N	
13	Coordination Plan	2-1	L	1	1	12	31	9	30	11	0	7	N	N	
14	Coordination Plan	5-1	L	1	1	12	31	11	0	18	0	7	N	N	
15	Coordination Plan	2-1	L	1	1	12	31	18	0	19	30	7	N	N	
16	None			0	0	0	0	0	0	0	0		N	N	
17	Coordination Plan	2-1	L	1	1	12	31	9	30	11	30	1	N	N	
18	Coordination Plan	5-1	L	1	1	12	31	11	30	18	0	1	N	N	
19	Coordination Plan	2-1	L	1	1	12	31	18	0	19	0	1	N	N	
20	None			0	0	0	0	0	0	0	0		N	N	
21	Coordination Plan	21-1	M	11	28	11	28	16	0	19	0	5	N	N	
22	Coordination Plan	21-1	M	11	29	11	29	10	0	20	0	6	N	N	
23	Coordination Plan	21-1	M	11	30	12	1	12	0	19	0	1 7	N	N	
24	None			0	0	0	0	0	0	0	0		N	N	
25	None			0	0	0	0	0	0	0	0		N	N	
26	None			0	0	0	0	0	0	0	0		N	N	
27	None			0	0	0	0	0	0	0	0		N	N	
28	None			0	0	0	0	0	0	0	0		N	N	
29	None			0	0	0	0	0	0	0	0		N	N	
30	None			0	0	0	0	0	0	0	0		N	N	
31	None			0	0	0	0	0	0	0	0		N	N	
32	None			0	0	0	0	0	0	0	0		N	N	
33	None			0	0	0	0	0	0	0	0		N	N	
34	None			0	0	0	0	0	0	0	0		N	N	
35	None			0	0	0	0	0	0	0	0		N	N	
36	None			0	0	0	0	0	0	0	0		N	N	
37	None			0	0	0	0	0	0	0	0		N	N	
38	None			0	0	0	0	0	0	0	0		N	N	
39	None			0	0	0	0	0	0	0	0		N	N	
40	None			0	0	0	0	0	0	0	0		N	N	
41	None			0	0	0	0	0	0	0	0		N	N	
42	None			0	0	0	0	0	0	0	0		N	N	
43	None			0	0	0	0	0	0	0	0		N	N	
44	None			0	0	0	0	0	0	0	0		N	N	
45	None			0	0	0	0	0	0	0	0		N	N	
46	None			0	0	0	0	0	0	0	0		N	N	
47	None			0	0	0	0	0	0	0	0		N	N	
48	None			0	0	0	0	0	0	0	0		N	N	
49	None			0	0	0	0	0	0	0	0		N	N	
50	None			0	0	0	0	0	0	0	0		N	N	

DocuSign Envelope ID: 5C03745C-4B01-4834-A65D-B77F558A4F46

1283 - 13-1283: NC 191/Brevard Rd @ PETCO
9 - Coordination Plan 1
5/21/2021 4:39 PM

Coordination Plan # 1

Cycle length (0-999 sec)	150
Min Transition Cycle (0-999 sec)	120
Max Transition Cycle (0-999 sec)	180

Offset # or Ring:	1	2	3	4
Offsets (0-999 sec)	131	0	0	0
Act Coord Phase Min Green (0-255)	0	0	0	0

Splits (0-255 sec)

Phase	1	2	3	4	5	6	7	8
Split	20	95	0	35	20	95	0	0
Phase	9	10	11	12	13	14	15	16
Split	0	0	0	0	0	0	0	0

Verify Plan Data

Phase/Function Settings:

	1	2	3	4	5	6	7	8	9	10	11	12	13	14	15	16
Coordinated Phase		2				6										
Float Force Offs																
Hold to Force Off																
Hi Priority Ped				4												
Dynamic/Backup																

Options:	**(Y/N)**	
Split/Timing in percent?	N	
*Permissive Mode (0-4)	0	*0 = Auto
Enable Transition Permissive Mode?	N	1 = Open
Adjust Non-Coordinated Splits?	Y	2 = Manual
Cycle Once per Cycle Length?	Y	3 = Window
		4 = Walk

Active Pages:	
Phase Sequence Page (1-12)	1
Phase Timing Page (1-4)	1
Phase Control Page (1-4)	1
OverLap Control Page (1-4)	1
Input Page (1-4)	1
Output Page (1-4)	1

Global Manual Permissive windows:

*Applies when "Window" permissive is selected

Manual Perm 1 End Point (0-255 sec)	0
Manual Perm 2 Start Point (0-255 sec)	0
Manual Perm 2 End Point (0-255 sec)	0

Manual Permissives by Phase:

*Applies when "Manual" permissive is selected

	Vehicle		Pedestrian	
(0-255 sec)	Start	Stop	Start	Stop
Phase 1	0	0	0	0
Phase 2	0	0	0	0
Phase 3	0	0	0	0
Phase 4	0	0	0	0
Phase 5	0	0	0	0
Phase 6	0	0	0	0
Phase 7	0	0	0	0
Phase 8	0	0	0	0
Phase 9	0	0	0	0
Phase 10	0	0	0	0
Phase 11	0	0	0	0
Phase 12	0	0	0	0
Phase 13	0	0	0	0
Phase 14	0	0	0	0
Phase 15	0	0	0	0
Phase 16	0	0	0	0

DocuSign Envelope ID: 5C03745C-4B01-4834-A65D-B77F558A4F46

1283 - 13-1283: NC 191/Brevard Rd @ PETCO
9 - Coordination Plan 2
5/21/2021 4:39 PM

Coordination Plan # 2

Cycle length (0-999 sec)	110
Min Transition Cycle (0-999 sec)	0
Max Transition Cycle (0-999 sec)	120

Offset # or Ring:	1	2	3	4
Offsets (0-999 sec)	89	0	0	0
Act Coord Phase Min Green (0-255)	0	0	0	0

Splits (0-255 sec)

Phase	1	2	3	4	5	6	7	8
Split	18	72	0	20	18	72	0	0
Phase	9	10	11	12	13	14	15	16
Split	0	0	0	0	0	0	0	0

Verify Plan Data

Phase/Function Settings:

	1	2	3	4	5	6	7	8	9	10	11	12	13	14	15	16
Coordinated Phase		2				6										
Float Force Offs																
Hold to Force Off																
Hi Priority Ped				4												
Dynamic/Backup																

Options:

	(Y/N)	
Split/Timing in percent?	N	
*Permissive Mode (0-4)	0	*0 = Auto
Enable Transition Permissive Mode?	N	1 = Open
Adjust Non-Coordinated Splits?	Y	2 = Manual
Cycle Once per Cycle Length?	Y	3 = Window
		4 = Walk

Active Pages:

Phase Sequence Page (1-12)	1
Phase Timing Page (1-4)	1
Phase Control Page (1-4)	1
OverLap Control Page (1-4)	1
Input Page (1-4)	1
Output Page (1-4)	1

Global Manual Permissive windows:

*Applies when "Window" permissive is selected

Manual Perm 1 End Point (0-255 sec)	0
Manual Perm 2 Start Point (0-255 sec)	0
Manual Perm 2 End Point (0-255 sec)	0

Manual Permissives by Phase:

*Applies when "Manual" permissive is selected

	Vehicle		Pedestrian	
(0-255 sec)	Start	Stop	Start	Stop
Phase 1	0	0	0	0
Phase 2	0	0	0	0
Phase 3	0	0	0	0
Phase 4	0	0	0	0
Phase 5	0	0	0	0
Phase 6	0	0	0	0
Phase 7	0	0	0	0
Phase 8	0	0	0	0
Phase 9	0	0	0	0
Phase 10	0	0	0	0
Phase 11	0	0	0	0
Phase 12	0	0	0	0
Phase 13	0	0	0	0
Phase 14	0	0	0	0
Phase 15	0	0	0	0
Phase 16	0	0	0	0

DocuSign Envelope ID: 5C03745C-4B01-4834-A65D-B77F558A4F46

1283 - 13-1283: NC 191/Brevard Rd @ PETCO
9 - Coordination Plan 3
5/21/2021 4:39 PM

Coordination Plan # 3

Cycle length (0-999 sec)	130
Min Transition Cycle (0-999 sec)	0
Max Transition Cycle (0-999 sec)	140

Offset # or Ring:	1	2	3	4
Offsets (0-999 sec)	105	0	0	0
Act Coord Phase Min Green (0-255)	0	0	0	0

Splits (0-255 sec)

Phase	1	2	3	4	5	6	7	8
Split	21	85	0	24	21	85	0	0
Phase	9	10	11	12	13	14	15	16
Split	0	0	0	0	0	0	0	0

Verify Plan Data

Phase/Function Settings:

	1	2	3	4	5	6	7	8	9	10	11	12	13	14	15	16
Coordinated Phase		2				6										
Float Force Offs																
Hold to Force Off																
Hi Priority Ped				4												
Dynamic/Backup																

Options:

	(Y/N)	
Split/Timing in percent?	N	
*Permissive Mode (0-4)	0	*0 = Auto
Enable Transition Permissive Mode?	N	1 = Open
Adjust Non-Coordinated Splits?	Y	2 = Manual
Cycle Once per Cycle Length?	Y	3 = Window
		4 = Walk

Active Pages:

Phase Sequence Page (1-12)	1
Phase Timing Page (1-4)	1
Phase Control Page (1-4)	1
OverLap Control Page (1-4)	1
Input Page (1-4)	1
Output Page (1-4)	1

Global Manual Permissive windows:

*Applies when "Window" permissive is selected

Manual Perm 1 End Point (0-255 sec)	0
Manual Perm 2 Start Point (0-255 sec)	0
Manual Perm 2 End Point (0-255 sec)	0

Manual Permissives by Phase:

*Applies when "Manual" permissive is selected

	Vehicle		Pedestrian	
(0-255 sec)	Start	Stop	Start	Stop
Phase 1	0	0	0	0
Phase 2	0	0	0	0
Phase 3	0	0	0	0
Phase 4	0	0	0	0
Phase 5	0	0	0	0
Phase 6	0	0	0	0
Phase 7	0	0	0	0
Phase 8	0	0	0	0
Phase 9	0	0	0	0
Phase 10	0	0	0	0
Phase 11	0	0	0	0
Phase 12	0	0	0	0
Phase 13	0	0	0	0
Phase 14	0	0	0	0
Phase 15	0	0	0	0
Phase 16	0	0	0	0

DocuSign Envelope ID: 5C03745C-4B01-4834-A65D-B77F558A4F46

1283 - 13-1283: NC 191/Brevard Rd @ PETCO
9 - Coordination Plan 4
5/21/2021 4:40 PM

Coordination Plan # 4

Cycle length (0-999 sec)	150
Min Transition Cycle (0-999 sec)	0
Max Transition Cycle (0-999 sec)	170

Offset # or Ring:	1	2	3	4
Offsets (0-999 sec)	2	0	0	0
Act Coord Phase Min Green (0-255)	0	0	0	0

Splits (0-255 sec)

Phase	1	2	3	4	5	6	7	8
Split	24	98	0	28	24	98	0	0
Phase	9	10	11	12	13	14	15	16
Split	0	0	0	0	0	0	0	0

Verify Plan Data

Phase/Function Settings:

	1	2	3	4	5	6	7	8	9	10	11	12	13	14	15	16
Coordinated Phase		2				6										
Float Force Offs																
Hold to Force Off																
Hi Priority Ped				4												
Dynamic/Backup																

Options:	**(Y/N)**	
Split/Timing in percent?	N	
*Permissive Mode (0-4)	0	*0 = Auto
Enable Transition Permissive Mode?	N	1 = Open
Adjust Non-Coordinated Splits?	Y	2 = Manual
Cycle Once per Cycle Length?	Y	3 = Window
		4 = Walk

Active Pages:	
Phase Sequence Page (1-12)	1
Phase Timing Page (1-4)	1
Phase Control Page (1-4)	1
OverLap Control Page (1-4)	1
Input Page (1-4)	1
Output Page (1-4)	1

Global Manual Permissive windows:

*Applies when "Window" permissive is selected

Manual Perm 1 End Point (0-255 sec)	0
Manual Perm 2 Start Point (0-255 sec)	0
Manual Perm 2 End Point (0-255 sec)	0

Manual Permissives by Phase:

*Applies when "Manual" permissive is selected

	Vehicle		Pedestrian	
(0-255 sec)	Start	Stop	Start	Stop
Phase 1	0	0	0	0
Phase 2	0	0	0	0
Phase 3	0	0	0	0
Phase 4	0	0	0	0
Phase 5	0	0	0	0
Phase 6	0	0	0	0
Phase 7	0	0	0	0
Phase 8	0	0	0	0
Phase 9	0	0	0	0
Phase 10	0	0	0	0
Phase 11	0	0	0	0
Phase 12	0	0	0	0
Phase 13	0	0	0	0
Phase 14	0	0	0	0
Phase 15	0	0	0	0
Phase 16	0	0	0	0

DocuSign Envelope ID: 5C03745C-4B01-4834-A65D-B77F558A4F46

1283 - 13-1283: NC 191/Brevard Rd @ PETCO
9 - Coordination Plan 5
5/21/2021 4:40 PM

Coordination Plan # 5

Cycle length (0-999 sec)	150
Min Transition Cycle (0-999 sec)	0
Max Transition Cycle (0-999 sec)	170

Offset # or Ring:	1	2	3	4
Offsets (0-999 sec)	78	0	0	0
Act Coord Phase Min Green (0-255)	0	0	0	0

Splits (0-255 sec)

Phase	1	2	3	4	5	6	7	8
Split	24	98	0	28	24	98	0	0
Phase	9	10	11	12	13	14	15	16
Split	0	0	0	0	0	0	0	0

Verify Plan Data

Phase/Function Settings:

	1	2	3	4	5	6	7	8	9	10	11	12	13	14	15	16
Coordinated Phase		2				6										
Float Force Offs																
Hold to Force Off																
Hi Priority Ped				4												
Dynamic/Backup																

Options:

	(Y/N)	
Split/Timing in percent?	N	
*Permissive Mode (0-4)	0	*0 = Auto
Enable Transition Permissive Mode?	N	1 = Open
Adjust Non-Coordinated Splits?	Y	2 = Manual
Cycle Once per Cycle Length?	Y	3 = Window
		4 = Walk

Active Pages:

Phase Sequence Page (1-12)	1
Phase Timing Page (1-4)	1
Phase Control Page (1-4)	1
OverLap Control Page (1-4)	1
Input Page (1-4)	1
Output Page (1-4)	1

Global Manual Permissive windows:

*Applies when "Window" permissive is selected

Manual Perm 1 End Point (0-255 sec)	0
Manual Perm 2 Start Point (0-255 sec)	0
Manual Perm 2 End Point (0-255 sec)	0

Manual Permissives by Phase:

*Applies when "Manual" permissive is selected

	Vehicle		Pedestrian	
(0-255 sec)	Start	Stop	Start	Stop
Phase 1	0	0	0	0
Phase 2	0	0	0	0
Phase 3	0	0	0	0
Phase 4	0	0	0	0
Phase 5	0	0	0	0
Phase 6	0	0	0	0
Phase 7	0	0	0	0
Phase 8	0	0	0	0
Phase 9	0	0	0	0
Phase 10	0	0	0	0
Phase 11	0	0	0	0
Phase 12	0	0	0	0
Phase 13	0	0	0	0
Phase 14	0	0	0	0
Phase 15	0	0	0	0
Phase 16	0	0	0	0

DocuSign Envelope ID: 5C03745C-4B01-4834-A65D-B77F558A4F46

1283 - 13-1283: NC 191/Brevard Rd @ PETCO
9 - Coordination Plan 21
5/21/2021 4:40 PM

Coordination Plan # 21

Cycle length (0-999 sec)	150
Min Transition Cycle (0-999 sec)	0
Max Transition Cycle (0-999 sec)	170

Offset # or Ring:	1	2	3	4
Offsets (0-999 sec)	62	0	0	0
Act Coord Phase Min Green (0-255)	0	0	0	0

Splits (0-255 sec)

Phase	1	2	3	4	5	6	7	8
Split	24	98	0	28	24	98	0	0
Phase	9	10	11	12	13	14	15	16
Split	0	0	0	0	0	0	0	0

Verify Plan Data

Phase/Function Settings:

	1	2	3	4	5	6	7	8	9	10	11	12	13	14	15	16
Coordinated Phase		2				6										
Float Force Offs																
Hold to Force Off																
Hi Priority Ped				4												
Dynamic/Backup																

Options:	**(Y/N)**	
Split/Timing in percent?	N	
*Permissive Mode (0-4)	0	*0 = Auto
Enable Transition Permissive Mode?	N	1 = Open
Adjust Non-Coordinated Splits?	Y	2 = Manual
Cycle Once per Cycle Length?	Y	3 = Window
		4 = Walk

Active Pages:	
Phase Sequence Page (1-12)	1
Phase Timing Page (1-4)	1
Phase Control Page (1-4)	1
OverLap Control Page (1-4)	1
Input Page (1-4)	1
Output Page (1-4)	1

Global Manual Permissive windows:

*Applies when "Window" permissive is selected

Manual Perm 1 End Point (0-255 sec)	0
Manual Perm 2 Start Point (0-255 sec)	0
Manual Perm 2 End Point (0-255 sec)	0

Manual Permissives by Phase:

*Applies when "Manual" permissive is selected

	Vehicle		Pedestrian	
(0-255 sec)	Start	Stop	Start	Stop
Phase 1	0	0	0	0
Phase 2	0	0	0	0
Phase 3	0	0	0	0
Phase 4	0	0	0	0
Phase 5	0	0	0	0
Phase 6	0	0	0	0
Phase 7	0	0	0	0
Phase 8	0	0	0	0
Phase 9	0	0	0	0
Phase 10	0	0	0	0
Phase 11	0	0	0	0
Phase 12	0	0	0	0
Phase 13	0	0	0	0
Phase 14	0	0	0	0
Phase 15	0	0	0	0
Phase 16	0	0	0	0

DocuSign Envelope ID: 5C03745C-4B01-4834-A65D-B77F558A4F46

1283 - 13-1283: NC 191/Brevard Rd @ PETCO
3 - Phase Timing 1
5/21/2021 4:39 PM

Phase Timing Elements	Phase															
	1	2	3	4	5	6	7	8	9	10	11	12	13	14	15	16
Minimum Green 1	7	12	7	7	7	12	7	7	0	0	0	0	0	0	0	0
Minimum Green 2	0	0	0	0	0	0	0	0	0	0	0	0	0	0	0	0
Re-service Green	0	0	0	0	0	0	0	0	0	0	0	0	0	0	0	0
Extension 1 (Gap 1)	2.0	6.0	2.0	2.0	2.0	6.0	2.0	2.0	0.0	0.0	0.0	0.0	0.0	0.0	0.0	0.0
Extension 2 (Gap 2)	0.0	0.0	0.0	0.0	0.0	0.0	0.0	0.0	0.0	0.0	0.0	0.0	0.0	0.0	0.0	0.0
Maximum Green 1	20	60	30	30	20	60	30	30	0	0	0	0	0	0	0	0
Maximum Green 2	0	0	0	0	0	0	0	0	0	0	0	0	0	0	0	0
Yellow Clearance	3.0	4.9	4.0	3.0	3.0	4.9	4.0	4.0	4.0	4.0	4.0	4.0	4.0	4.0	4.0	4.0
Red Clearance	1.9	1.9	2.0	3.5	3.1	1.9	2.0	2.0	2.0	2.0	2.0	2.0	2.0	2.0	2.0	2.0
Red Revert	2.0	2.0	2.0	2.0	2.0	2.0	2.0	2.0	2.0	2.0	2.0	2.0	2.0	2.0	2.0	2.0
Walk 1	0	0	0	7	0	7	0	0	0	0	0	0	0	0	0	0
Walk 2	0	0	0	0	0	0	0	0	0	0	0	0	0	0	0	0
Dont Walk 1	0	0	0	23	0	22	0	0	0	0	0	0	0	0	0	0
Dont Walk 2	0	0	0	0	0	0	0	0	0	0	0	0	0	0	0	0
Walk Advance Time	0.0	0.0	0.0	0.0	0.0	0.0	0.0	0.0	0.0	0.0	0.0	0.0	0.0	0.0	0.0	0.0
Walk Delay Time	0.0	0.0	0.0	0.0	0.0	0.0	0.0	0.0	0.0	0.0	0.0	0.0	0.0	0.0	0.0	0.0
Alternate Walk	0	0	0	0	0	0	0	0	0	0	0	0	0	0	0	0
Alternate Dont Walk	0	0	0	0	0	0	0	0	0	0	0	0	0	0	0	0
Alternate Min Green	0	0	0	0	0	0	0	0	0	0	0	0	0	0	0	0
Dynamic Max / Max 3	0	0	0	0	0	0	0	0	0	0	0	0	0	0	0	0
Dynamic Max Adjust	0.0	0.0	0.0	0.0	0.0	0.0	0.0	0.0	0.0	0.0	0.0	0.0	0.0	0.0	0.0	0.0
Seconds / Actuation	0.0	1.8	0.0	0.0	0.0	1.8	0.0	0.0	0.0	0.0	0.0	0.0	0.0	0.0	0.0	0.0
Max Variable Initial	0	34	0	0	0	34	0	0	0	0	0	0	0	0	0	0
Time Before Reduction	0	15	0	0	0	15	0	0	0	0	0	0	0	0	0	0
Time To Reduce	0	30	0	0	0	30	0	0	0	0	0	0	0	0	0	0
Minimum Gap	0.0	3.0	0.0	0.0	0.0	3.0	0.0	0.0	0.0	0.0	0.0	0.0	0.0	0.0	0.0	0.0
Alt Flash Frequency (0-25.5 Hz)	1.0															

DocuSign Envelope ID: 5C03745C-4B01-4834-A65D-B77F558A4F46

1283 - 13-1283: NC 191/Brevard Rd @ PETCO
4 - Phase Sequence Page 1
5/21/2021 4:39 PM

Rings	Barrier 1				Barrier 2				Barrier 3				Barrier 4			
1	1	2	0	0	0	4	0	0	0	0	0	0	0	0	0	0
2	5	6	0	0	0	0	0	0	0	0	0	0	0	0	0	0
3	0	0	0	0	0	0	0	0	0	0	0	0	0	0	0	0
4	0	0	0	0	0	0	0	0	0	0	0	0	0	0	0	0

Rings	Barrier 5				Barrier 6				Barrier 7				Barrier 8			
1	0	0	0	0	0	0	0	0	0	0	0	0	0	0	0	0
2	0	0	0	0	0	0	0	0	0	0	0	0	0	0	0	0
3	0	0	0	0	0	0	0	0	0	0	0	0	0	0	0	0
4	0	0	0	0	0	0	0	0	0	0	0	0	0	0	0	0

Phase Directions

1		5		9		13	
2		6		10		14	
3		7		11		15	
4		8		12		16	

DocuSign Envelope ID: 5C03745C-4B01-4834-A65D-B77F558A4F46

1283 - 13-1283: NC 191/Brevard Rd @ PETCO
2-1 Phase Control Functions Page 1
5/21/2021 4:39 PM

	1 2 3 4 5 6 7 8 9 10 11 12 13 14 15 16
Time Min 2	
Time Extension 2	
Time Max 2	
Soft Recall	
Minimum Recall	2 6
Maximum Recall 1	
Maximum Recall 2	
Call Non-Act 1	
Call Non-Act 2	
Omit Phase	
Dual Entry	
No Skip	
Added Extension	
Simultaneous Gap	1 2 3 4 5 6 7 8
Guaranteed Passage	
Green Interval Flash	
Fast Green Flash	
Red Rest	
Backup Protection	
Inhibit Reservice	
Inhibit Max (Coord)	1 2 3 4 5 6 7 8 9 10 11 12 13 14 15 16
Inhibit Coordination	
Dynamic Max/Max3	
Variable Initial	2 6
Gap Reduction	2 6
Omit Pedestrian	
Time Walk 2	
Time FDWalk 2	

	1 2 3 4 5 6 7 8 9 10 11 12 13 14 15 16
Ped Soft Recall	
Ped Recall	
Rest In Walk	
Modified Rest In Walk	
Ped Reservice	
Flashing Walk	
Advanced Walk	
Delayed Walk	
Ped Yellow Clear	
Ped Red Clear	
Startup In Green	2 6
Startup In Yellow	
Startup Red Clear	
First Phases	
Startup Calls	
Startup Ped Calls	4 6
Flash Entry	2 6
Yellow Flash	2 6
Wag Phases	1 3 6 8
Wag Overlaps	1
Manual Control	1 2 3 4 5 6 7 8
Manual Control Omit Ped	
Red Detector Lock	
Yellow Detector Lock	2 6
Active Logic 1 - 16	1 2 3 4 5 6 7 8
Active Logic 17 - 32	
Dynamic/Backup	

DocuSign Envelope ID: 5C03745C-4B01-4834-A65D-B77F558A4F46

PROJECT REFERENCE NO.	SHEET NO.
U-4715 B	Sig.118.0

PHASING DIAGRAM

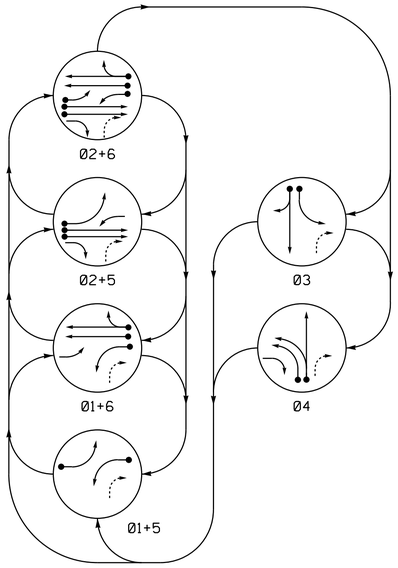

PHASING DIAGRAM DETECTION LEGEND

- DETECTED MOVEMENT
- UNDETECTED MOVEMENT (OVERLAP)
- UNSIGNALIZED MOVEMENT
- PEDESTRIAN MOVEMENT

EV PREEMPT PHASES

(Medium Priority)



TABLE OF OPERATION

SIGNAL FACE	PHASE 01+5	01+6	02+5	02+6	Ø3	Ø4	PRE 2	FLASH
11	←	←	F Y	F Y	~~R~~	~~R~~	~~R~~	~~Y~~
21	R	R	G	G	R	R	R	Y
22	R	R	G	G	R	R ↗	R	Y
31	R	R	R	R	G ←	R	G ←	R
32	R	R	R	R	G	R	G	R
41	R	R	R	R	R	G	R	R
42	R	R	R	R	R	G	R	R
51	←	F Y	←	F Y	~~R~~	~~R~~	~~R~~	~~Y~~
61, 62	R	G	R	G	R	R	R	Y

SIGNAL FACE I.D.

All Heads L.E.D.

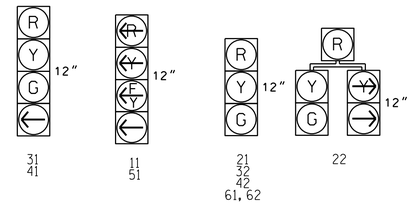

OASIS 2070 LOOP & DETECTOR INSTALLATION CHART

INDUCTIVE LOOPS					DETECTOR PROGRAMMING							
LOOP	SIZE (FT)	DISTANCE FROM STOPBAR (FT)	TURNS	NEW LOOP	PHASE	CALLING	EXTENSION	FULL TIME DELAY	STRETCH TIME	DELAY TIME	SYSTEM LOOP	NEW CARD
1A	6x40	0	2-4-2	-	1	Y	Y	-	-	15	-	Y
				-	6	Y	Y	Y	-	3	-	Y
2A	6x6	300	5	-	2	Y	Y	-	-	-	-	Y
2B	6x6	300	5	-	2	Y	Y	-	-	-	-	Y
3A	6x40	0	2-4-2	-	3	Y	Y	-	-	-	-	Y
3B	6x40	0	2-4-2	-	3	Y	Y	-	-	20	-	Y
4A	6x40	0	2-4-2	-	4	Y	Y	-	-	-	-	Y
4B	6x40	0	2-4-2	-	4	Y	Y	-	-	-	-	Y
5A	6x40	0	2-4-2	-	5	Y	Y	-	-	15	-	Y
					2	Y	Y	Y	-	3	-	Y
6A	6x6	230	5	-	6	Y	Y	-	-	-	-	Y
6B	6x6	230	5	-	6	Y	Y	-	-	-	-	Y
S1	6x6	+165	4	-	-	-	-	-	-	-	Y	Y
S2	6x6	+165	4	-	-	-	-	-	-	-	Y	Y

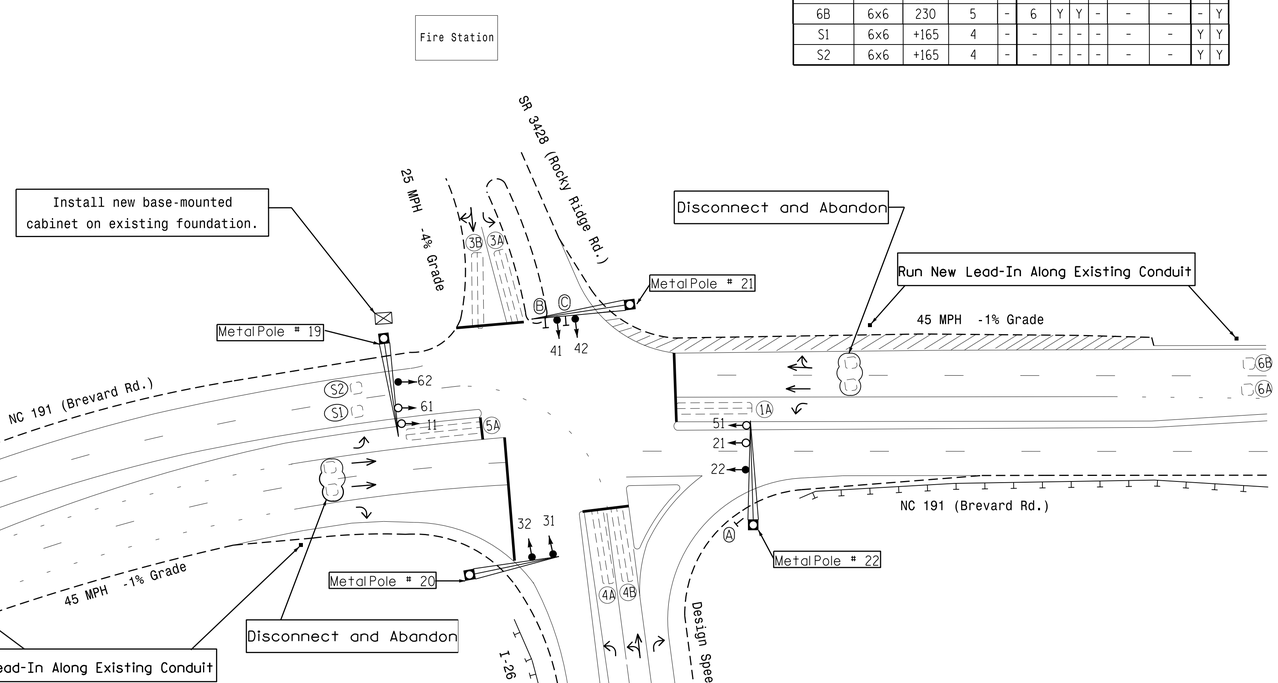

OASIS 2070 TIMING CHART

FEATURE	PHASE 1	2	3	4	5	6
Min Green 1 *	7	12	7	7	7	12
Extension 1 *	1.0	6.0	1.0	1.0	1.0	6.0
Max Green 1 *	15	90	35	35	15	90
Yellow Clearance	3.0	4.6	4.1	3.1	3.0	4.6
Red Clearance	2.4	1.6	1.8	2.7	2.3	1.6
Red Revert	2.0	2.0	2.0	2.0	2.0	2.0
Walk 1 *	-	-	-	-	-	-
Don't Walk 1	-	-	-	-	-	-
Seconds Per Actuation *	-	1.5	-	-	-	1.5
Max Variable Initial *	-	34	-	-	-	34
Time Before Reduction *	-	15	-	-	-	15
Time To Reduce *	-	30	-	-	-	30
Minimum Gap	-	3.0	-	-	-	3.0
Recall Mode	-	MIN RECALL	-	-	-	MIN RECALL
Vehicle Call Memory	-	YELLOW	-	-	-	YELLOW
Dual Entry	-	-	-	-	-	-
Simultaneous Gap	ON	ON	ON	ON	ON	ON

* These values may be field adjusted. Do not adjust Min Green and Extension times for phases 2 and 6 lower than what is shown. Min Green for all other phases should not be lower than 4 seconds.

OASIS 2070 EV PREEMPT

FUNCTION	PRE 2
Interval 1 – Dwell Green	255
Interval 1 – Dwell Yellow	0.0*
Interval 1 – Dwell Red	0.0*
Interval 5 – Exit Green	1
Interval 5 – Yellow	0.0*
Interval 5 – Red	0.0*
Exit Phase	4
Priority	MED
Delay Time	**
Min Green Before Pre	1
Ped Clear Before Pre	-
Yellow Clear Before Pre	0.0*
Red Clear Before Pre	0.0*
Dwell Min Time	**
Enable Backup Protection	N
Ped Clear Through Yellow	N
Omit Overlaps	-
Preempt Extend**	-

* Time defaults to time used for phase during normal operation
** See note 11

6 Phase Fully Actuated Asheville Signal System

NOTES

1. Refer to "Roadway Standard Drawings NCDOT" dated January 2012 and "Standard Specifications for Roads and Structures" dated January 2012.
2. Do not program signal for late night flashing operation unless otherwise directed by the Engineer.
3. The order of phase 3 and phase 4 may be reversed.
4. Phase 1 and/or phase 5 may be lagged.
5. Reposition existing signal heads numbered 22 & 62.
6. Set all detector units to presence mode.
7. Locate new cabinet so as not to obstruct sight distance of vehicles turning right on red.
8. Remove existing "Left Turn Yield on Green" sign-(R10-12) on Metal Pole 19 & 22.
9. In the event of loop replacement, refer to the current ITS and Signals Design Manual and submit a Plan of Record to the Signal Design Section.
10. Pavement markings are existing.
11. The Division Traffic Engineer will determine the Delay before Preempt and Preempt Dwell Min Green time for the emergency vehicle preemption timing.
12. Maximum times shown in timing chart are for free-run operation only. Coordinated signal system timing values supersede these values.

LEGEND

PROPOSED		EXISTING
○→	Traffic Signal Head	●→
◐→	Modified Signal Head	N/A
⊣	Sign	⊣
□	Pedestrian Signal Head With Push Button & Sign	■
○	Signal Pole with Guy	●
○	Signal Pole with Sidewalk Guy	●
▭	Inductive Loop Detector	▭
⊠	Controller & Cabinet	⊠
□	Junction Box	■
	2-in Underground Conduit	
N/A	Right of Way	
→	Directional Arrow	→
○	Metal Pole with Mastarm	○
Ⓐ	"YIELD" Sign (R1-2)	Ⓐ
Ⓑ	Left Arrow "ONLY" Sign (R3-5L)	Ⓑ
Ⓒ	Combined Through and Left Arrow Sign (R3-6L)	Ⓒ

Signal Upgrade

DOCUMENT NOT CONSIDERED FINAL UNLESS ALL SIGNATURES COMPLETED

Prepared in the Offices of:
Transportation Mobility and Safety Division
NORTH CAROLINA DEPARTMENT OF TRANSPORTATION
Signal Design Section
750 N.Greenfield Pkwy,Garner,NC 27529

NC 191 (Brevard Road) at I-26 Eastbound Ramp/ SR 3428 (Rocky Ridge Road)

Division 13 Buncombe County Asheville

PLAN DATE: July 2016 REVIEWED BY: T.J. Williams
PREPARED BY: C. Pierce REVIEWED BY:

SCALE 0 40 1"=40'

REVISIONS	INIT.	DATE

SEAL
NORTH CAROLINA PROFESSIONAL SEAL 024393 ENGINEER TIMOTHY J. WILLIAMS

DocuSigned by: T. J. Williams 9/13/2016
STAMP/ENGINEER DATE

SIG. INVENTORY NO. 13-0514

13-SEP-2016 09:18
S:\Traffic\Signals\Signal Design Section\Western Region\Div-13\U-4715B (Asheville Signal System\Signal Designs\13-0514\130514_sig_dsn_2016emdd.dgn
rnziser

DocuSign Envelope ID: 5C03745C-4B01-4834-A65D-B77F558A4F46

514 - 13-0514: NC 191/Brevard Rd @ I-26 EB Ramps
B - Scheduling Events 1-100
5/21/2021 4:49 PM

Event #	Event Type	Event Details	Pri LMH	Start Date MM	Start Date DD	Stop Date MM	Stop Date DD	Start Time HH	Start Time MM	Stop Time HH	Stop Time MM	DOW Enabled 1 2 3 4 5 6 7	Del When Done	Cont	Event Groups Assigned 1 2 3 4 5 6 7 8 9 10 11 12 13 14 15 16
1	Coordination Plan	1-1	L	1	1	12	31	7	0	9	15	2 3 4 5 6	N	N	
2	Coordination Plan	2-1	L	1	1	12	31	9	15	11	30	2 3 4 5 6	N	N	
3	Coordination Plan	3-1	L	1	1	12	31	11	30	14	45	2 3 4 5 6	N	N	
4	Coordination Plan	4-1	L	1	1	12	31	14	45	18	30	2 3 4 5 6	N	N	
5	Coordination Plan	2-1	L	1	1	12	31	18	30	20	0	2 3 4 5 6	N	N	
6	None			0	0	0	0	0	0	0	0		N	N	
7	None			0	0	0	0	0	0	0	0		N	N	
8	None			0	0	0	0	0	0	0	0		N	N	
9	None			0	0	0	0	0	0	0	0		N	N	
10	None			0	0	0	0	0	0	0	0		N	N	
11	None			0	0	0	0	0	0	0	0		N	N	
12	None			0	0	0	0	0	0	0	0		N	N	
13	Coordination Plan	2-1	L	1	1	12	31	9	30	11	0	7	N	N	
14	Coordination Plan	5-1	L	1	1	12	31	11	0	18	0	7	N	N	
15	Coordination Plan	2-1	L	1	1	12	31	18	0	19	30	7	N	N	
16	None			0	0	0	0	0	0	0	0		N	N	
17	Coordination Plan	2-1	L	1	1	12	31	9	30	11	30	1	N	N	
18	Coordination Plan	5-1	L	1	1	12	31	11	30	18	0	1	N	N	
19	Coordination Plan	2-1	L	1	1	12	31	18	0	19	0	1	N	N	
20	None			0	0	0	0	0	0	0	0		N	N	
21	Coordination Plan	21-1	M	11	28	11	28	16	0	19	0	5	N	N	
22	Coordination Plan	21-1	M	11	29	11	29	10	0	20	0	6	N	N	
23	Coordination Plan	21-1	M	11	30	12	1	12	0	19	0	1 7	N	N	
24	None			0	0	0	0	0	0	0	0		N	N	
25	None			0	0	0	0	0	0	0	0		N	N	
26	None			0	0	0	0	0	0	0	0		N	N	
27	None			0	0	0	0	0	0	0	0		N	N	
28	None			0	0	0	0	0	0	0	0		N	N	
29	None			0	0	0	0	0	0	0	0		N	N	
30	None			0	0	0	0	0	0	0	0		N	N	
31	None			0	0	0	0	0	0	0	0		N	N	
32	None			0	0	0	0	0	0	0	0		N	N	
33	None			0	0	0	0	0	0	0	0		N	N	
34	None			0	0	0	0	0	0	0	0		N	N	
35	None			0	0	0	0	0	0	0	0		N	N	
36	None			0	0	0	0	0	0	0	0		N	N	
37	None			0	0	0	0	0	0	0	0		N	N	
38	None			0	0	0	0	0	0	0	0		N	N	
39	None			0	0	0	0	0	0	0	0		N	N	
40	None			0	0	0	0	0	0	0	0		N	N	
41	None			0	0	0	0	0	0	0	0		N	N	
42	None			0	0	0	0	0	0	0	0		N	N	
43	None			0	0	0	0	0	0	0	0		N	N	
44	None			0	0	0	0	0	0	0	0		N	N	
45	None			0	0	0	0	0	0	0	0		N	N	
46	None			0	0	0	0	0	0	0	0		N	N	
47	None			0	0	0	0	0	0	0	0		N	N	
48	None			0	0	0	0	0	0	0	0		N	N	
49	None			0	0	0	0	0	0	0	0		N	N	
50	None			0	0	0	0	0	0	0	0		N	N	

DocuSign Envelope ID: 5C03745C-4B01-4834-A65D-B77F558A4F46

514 - 13-0514: NC 191/Brevard Rd @ I-26 EB Ramps
9 - Coordination Plan 1
5/21/2021 4:48 PM

Coordination Plan # 1

Cycle length (0-999 sec)	150
Min Transition Cycle (0-999 sec)	100
Max Transition Cycle (0-999 sec)	200

Offset # or Ring:	1	2	3	4
Offsets (0-999 sec)	15	0	0	0
Act Coord Phase Min Green (0-255)	0	0	0	0

Splits (0-255 sec)

Phase	1	2	3	4	5	6	7	8
Split	30	68	0	52	0	98	0	0
Phase	9	10	11	12	13	14	15	16
Split	0	0	0	0	0	0	0	0

Verify Plan Data

Phase/Function Settings:

	1	2	3	4	5	6	7	8	9	10	11	12	13	14	15	16
Coordinated Phase		2				6										
Float Force Offs																
Hold to Force Off																
Hi Priority Ped																
Dynamic/Backup																

Options:	**(Y/N)**	
Split/Timing in percent?	N	
*Permissive Mode (0-4)	0	*0 = Auto
Enable Transition Permissive Mode?	N	1 = Open
Adjust Non-Coordinated Splits?	Y	2 = Manual
Cycle Once per Cycle Length?	Y	3 = Window
		4 = Walk

Active Pages:	
Phase Sequence Page (1-12)	1
Phase Timing Page (1-4)	1
Phase Control Page (1-4)	1
OverLap Control Page (1-4)	1
Input Page (1-4)	1
Output Page (1-4)	1

Global Manual Permissive windows:

*Applies when "Window" permissive is selected

Manual Perm 1 End Point (0-255 sec)	0
Manual Perm 2 Start Point (0-255 sec)	0
Manual Perm 2 End Point (0-255 sec)	0

Manual Permissives by Phase:

*Applies when "Manual" permissive is selected

	Vehicle		Pedestrian	
(0-255 sec)	Start	Stop	Start	Stop
Phase 1	0	0	0	0
Phase 2	0	0	0	0
Phase 3	0	0	0	0
Phase 4	0	0	0	0
Phase 5	0	0	0	0
Phase 6	0	0	0	0
Phase 7	0	0	0	0
Phase 8	0	0	0	0
Phase 9	0	0	0	0
Phase 10	0	0	0	0
Phase 11	0	0	0	0
Phase 12	0	0	0	0
Phase 13	0	0	0	0
Phase 14	0	0	0	0
Phase 15	0	0	0	0
Phase 16	0	0	0	0

DocuSign Envelope ID: 5C03745C-4B01-4834-A65D-B77F558A4F46

514 - 13-0514: NC 191/Brevard Rd @ I-26 EB Ramps
9 - Coordination Plan 2
5/21/2021 4:48 PM

Coordination Plan # 2

Cycle length (0-999 sec)	110
Min Transition Cycle (0-999 sec)	75
Max Transition Cycle (0-999 sec)	180

Offset # or Ring:	1	2	3	4
Offsets (0-999 sec)	5	0	0	0
Act Coord Phase Min Green (0-255)	0	0	0	0

Splits (0-255 sec)

Phase	1	2	3	4	5	6	7	8
Split	25	43	0	42	0	68	0	0
Phase	9	10	11	12	13	14	15	16
Split	0	0	0	0	0	0	0	0

Verify Plan Data

Phase/Function Settings:

	1	2	3	4	5	6	7	8	9	10	11	12	13	14	15	16
Coordinated Phase		2				6										
Float Force Offs																
Hold to Force Off																
Hi Priority Ped																
Dynamic/Backup																

Options:	**(Y/N)**	
Split/Timing in percent?	N	
*Permissive Mode (0-4)	0	*0 = Auto
Enable Transition Permissive Mode?	N	1 = Open
Adjust Non-Coordinated Splits?	Y	2 = Manual
Cycle Once per Cycle Length?	Y	3 = Window
		4 = Walk

Active Pages:	
Phase Sequence Page (1-12)	1
Phase Timing Page (1-4)	1
Phase Control Page (1-4)	1
OverLap Control Page (1-4)	1
Input Page (1-4)	1
Output Page (1-4)	1

Global Manual Permissive windows:

*Applies when "Window" permissive is selected

Manual Perm 1 End Point (0-255 sec)	0
Manual Perm 2 Start Point (0-255 sec)	0
Manual Perm 2 End Point (0-255 sec)	0

Manual Permissives by Phase:

*Applies when "Manual" permissive is selected

	Vehicle		Pedestrian	
(0-255 sec)	Start	Stop	Start	Stop
Phase 1	0	0	0	0
Phase 2	0	0	0	0
Phase 3	0	0	0	0
Phase 4	0	0	0	0
Phase 5	0	0	0	0
Phase 6	0	0	0	0
Phase 7	0	0	0	0
Phase 8	0	0	0	0
Phase 9	0	0	0	0
Phase 10	0	0	0	0
Phase 11	0	0	0	0
Phase 12	0	0	0	0
Phase 13	0	0	0	0
Phase 14	0	0	0	0
Phase 15	0	0	0	0
Phase 16	0	0	0	0

DocuSign Envelope ID: 5C03745C-4B01-4834-A65D-B77F558A4F46

514 - 13-0514: NC 191/Brevard Rd @ I-26 EB Ramps
9 - Coordination Plan 3
5/21/2021 4:48 PM

Coordination Plan # 3

Cycle length (0-999 sec)	130
Min Transition Cycle (0-999 sec)	80
Max Transition Cycle (0-999 sec)	200

Offset # or Ring:	1	2	3	4
Offsets (0-999 sec)	129	0	0	0
Act Coord Phase Min Green (0-255)	0	0	0	0

Splits (0-255 sec)

Phase	1	2	3	4	5	6	7	8
Split	25	55	0	50	0	80	0	0
Phase	9	10	11	12	13	14	15	16
Split	0	0	0	0	0	0	0	0

Verify Plan Data

Phase/Function Settings:

	1	2	3	4	5	6	7	8	9	10	11	12	13	14	15	16
Coordinated Phase		2				6										
Float Force Offs																
Hold to Force Off																
Hi Priority Ped																
Dynamic/Backup																

Options:	**(Y/N)**	
Split/Timing in percent?	N	
*Permissive Mode (0-4)	0	*0 = Auto
Enable Transition Permissive Mode?	N	1 = Open
Adjust Non-Coordinated Splits?	Y	2 = Manual
Cycle Once per Cycle Length?	Y	3 = Window
		4 = Walk

Active Pages:	
Phase Sequence Page (1-12)	1
Phase Timing Page (1-4)	1
Phase Control Page (1-4)	1
OverLap Control Page (1-4)	1
Input Page (1-4)	1
Output Page (1-4)	1

Global Manual Permissive windows:

*Applies when "Window" permissive is selected

Manual Perm 1 End Point (0-255 sec)	0
Manual Perm 2 Start Point (0-255 sec)	0
Manual Perm 2 End Point (0-255 sec)	0

Manual Permissives by Phase:

*Applies when "Manual" permissive is selected

	Vehicle		Pedestrian	
(0-255 sec)	Start	Stop	Start	Stop
Phase 1	0	0	0	0
Phase 2	0	0	0	0
Phase 3	0	0	0	0
Phase 4	0	0	0	0
Phase 5	0	0	0	0
Phase 6	0	0	0	0
Phase 7	0	0	0	0
Phase 8	0	0	0	0
Phase 9	0	0	0	0
Phase 10	0	0	0	0
Phase 11	0	0	0	0
Phase 12	0	0	0	0
Phase 13	0	0	0	0
Phase 14	0	0	0	0
Phase 15	0	0	0	0
Phase 16	0	0	0	0

DocuSign Envelope ID: 5C03745C-4B01-4834-A65D-B77F558A4F46

514 - 13-0514: NC 191/Brevard Rd @ I-26 EB Ramps
9 - Coordination Plan 4
5/21/2021 4:48 PM

Coordination Plan # 4

Cycle length (0-999 sec)	150
Min Transition Cycle (0-999 sec)	100
Max Transition Cycle (0-999 sec)	200

Offset # or Ring:	1	2	3	4
Offsets (0-999 sec)	46	0	0	0
Act Coord Phase Min Green (0-255)	0	0	0	0

Splits (0-255 sec)

Phase	1	2	3	4	5	6	7	8
Split	35	63	0	52	0	98	0	0
Phase	9	10	11	12	13	14	15	16
Split	0	0	0	0	0	0	0	0

Verify Plan Data

Phase/Function Settings:

	1	2	3	4	5	6	7	8	9	10	11	12	13	14	15	16
Coordinated Phase		2				6										
Float Force Offs																
Hold to Force Off																
Hi Priority Ped																
Dynamic/Backup																

Options:	**(Y/N)**	
Split/Timing in percent?	N	
*Permissive Mode (0-4)	0	*0 = Auto
Enable Transition Permissive Mode?	N	1 = Open
Adjust Non-Coordinated Splits?	Y	2 = Manual
Cycle Once per Cycle Length?	Y	3 = Window
		4 = Walk

Active Pages:	
Phase Sequence Page (1-12)	1
Phase Timing Page (1-4)	1
Phase Control Page (1-4)	1
OverLap Control Page (1-4)	1
Input Page (1-4)	1
Output Page (1-4)	1

Global Manual Permissive windows:

*Applies when "Window" permissive is selected

Manual Perm 1 End Point (0-255 sec)	0
Manual Perm 2 Start Point (0-255 sec)	0
Manual Perm 2 End Point (0-255 sec)	0

Manual Permissives by Phase:

*Applies when "Manual" permissive is selected

	Vehicle		Pedestrian	
(0-255 sec)	Start	Stop	Start	Stop
Phase 1	0	0	0	0
Phase 2	0	0	0	0
Phase 3	0	0	0	0
Phase 4	0	0	0	0
Phase 5	0	0	0	0
Phase 6	0	0	0	0
Phase 7	0	0	0	0
Phase 8	0	0	0	0
Phase 9	0	0	0	0
Phase 10	0	0	0	0
Phase 11	0	0	0	0
Phase 12	0	0	0	0
Phase 13	0	0	0	0
Phase 14	0	0	0	0
Phase 15	0	0	0	0
Phase 16	0	0	0	0

DocuSign Envelope ID: 5C03745C-4B01-4834-A65D-B77F558A4F46

514 - 13-0514: NC 191/Brevard Rd @ I-26 EB Ramps
9 - Coordination Plan 5
5/21/2021 4:48 PM

Coordination Plan # 5

Cycle length (0-999 sec)	150
Min Transition Cycle (0-999 sec)	100
Max Transition Cycle (0-999 sec)	200

Offset # or Ring:	1	2	3	4
Offsets (0-999 sec)	105	0	0	0
Act Coord Phase Min Green (0-255)	0	0	0	0

Splits (0-255 sec)

Phase	1	2	3	4	5	6	7	8
Split	35	60	0	55	0	95	0	0
Phase	9	10	11	12	13	14	15	16
Split	0	0	0	0	0	0	0	0

Verify Plan Data

Phase/Function Settings:

	1	2	3	4	5	6	7	8	9	10	11	12	13	14	15	16
Coordinated Phase		2				6										
Float Force Offs																
Hold to Force Off																
Hi Priority Ped																
Dynamic/Backup																

Options:	**(Y/N)**	
Split/Timing in percent?	N	
*Permissive Mode (0-4)	0	*0 = Auto
Enable Transition Permissive Mode?	N	1 = Open
Adjust Non-Coordinated Splits?	Y	2 = Manual
Cycle Once per Cycle Length?	Y	3 = Window
		4 = Walk

Active Pages:	
Phase Sequence Page (1-12)	1
Phase Timing Page (1-4)	1
Phase Control Page (1-4)	1
OverLap Control Page (1-4)	1
Input Page (1-4)	1
Output Page (1-4)	1

Global Manual Permissive windows:

*Applies when "Window" permissive is selected

Manual Perm 1 End Point (0-255 sec)	0
Manual Perm 2 Start Point (0-255 sec)	0
Manual Perm 2 End Point (0-255 sec)	0

Manual Permissives by Phase:

*Applies when "Manual" permissive is selected

	Vehicle		Pedestrian	
(0-255 sec)	Start	Stop	Start	Stop
Phase 1	0	0	0	0
Phase 2	0	0	0	0
Phase 3	0	0	0	0
Phase 4	0	0	0	0
Phase 5	0	0	0	0
Phase 6	0	0	0	0
Phase 7	0	0	0	0
Phase 8	0	0	0	0
Phase 9	0	0	0	0
Phase 10	0	0	0	0
Phase 11	0	0	0	0
Phase 12	0	0	0	0
Phase 13	0	0	0	0
Phase 14	0	0	0	0
Phase 15	0	0	0	0
Phase 16	0	0	0	0

DocuSign Envelope ID: 5C03745C-4B01-4834-A65D-B77F558A4F46

514 - 13-0514: NC 191/Brevard Rd @ I-26 EB Ramps
9 - Coordination Plan 21
5/21/2021 4:48 PM

Coordination Plan # 21

Cycle length (0-999 sec)	150
Min Transition Cycle (0-999 sec)	100
Max Transition Cycle (0-999 sec)	200

Offset # or Ring:	1	2	3	4
Offsets (0-999 sec)	84	0	0	0
Act Coord Phase Min Green (0-255)	0	0	0	0

Splits (0-255 sec)

Phase	1	2	3	4	5	6	7	8
Split	20	79	0	51	0	99	0	0
Phase	9	10	11	12	13	14	15	16
Split	0	0	0	0	0	0	0	0

Verify Plan Data

Phase/Function Settings:

	1	2	3	4	5	6	7	8	9	10	11	12	13	14	15	16
Coordinated Phase		**2**				**6**										
Float Force Offs																
Hold to Force Off																
Hi Priority Ped																
Dynamic/Backup																

Options:	**(Y/N)**	
Split/Timing in percent?	N	
*Permissive Mode (0-4)	0	*0 = Auto
Enable Transition Permissive Mode?	N	1 = Open
Adjust Non-Coordinated Splits?	Y	2 = Manual
Cycle Once per Cycle Length?	Y	3 = Window
		4 = Walk

Active Pages:	
Phase Sequence Page (1-12)	1
Phase Timing Page (1-4)	1
Phase Control Page (1-4)	1
OverLap Control Page (1-4)	1
Input Page (1-4)	1
Output Page (1-4)	1

Global Manual Permissive windows:

*Applies when "Window" permissive is selected

Manual Perm 1 End Point (0-255 sec)	0
Manual Perm 2 Start Point (0-255 sec)	0
Manual Perm 2 End Point (0-255 sec)	0

Manual Permissives by Phase:

*Applies when "Manual" permissive is selected

	Vehicle		Pedestrian	
(0-255 sec)	Start	Stop	Start	Stop
Phase 1	0	0	0	0
Phase 2	0	0	0	0
Phase 3	0	0	0	0
Phase 4	0	0	0	0
Phase 5	0	0	0	0
Phase 6	0	0	0	0
Phase 7	0	0	0	0
Phase 8	0	0	0	0
Phase 9	0	0	0	0
Phase 10	0	0	0	0
Phase 11	0	0	0	0
Phase 12	0	0	0	0
Phase 13	0	0	0	0
Phase 14	0	0	0	0
Phase 15	0	0	0	0
Phase 16	0	0	0	0

DocuSign Envelope ID: 5C03745C-4B01-4834-A65D-B77F558A4F46

514 - 13-0514: NC 191/Brevard Rd @ I-26 EB Ramps
2-1 Phase Control Functions Page 1
5/21/2021 4:48 PM

	1 2 3 4 5 6 7 8 9 10 11 12 13 14 15 16
Time Min 2	
Time Extension 2	
Time Max 2	
Soft Recall	
Minimum Recall	1 2 4 6
Maximum Recall 1	
Maximum Recall 2	
Call Non-Act 1	
Call Non-Act 2	
Omit Phase	
Dual Entry	
No Skip	
Added Extension	
Simultaneous Gap	1 2 3 4 5 6 7 8
Guaranteed Passage	
Green Interval Flash	
Fast Green Flash	
Red Rest	
Backup Protection	
Inhibit Reservice	
Inhibit Max (Coord)	1 2 3 4 5 6 7 8 9 10 11 12 13 14 15 16
Inhibit Coordination	
Dynamic Max/Max3	
Variable Initial	2 6
Gap Reduction	2 6
Omit Pedestrian	
Time Walk 2	
Time FDWalk 2	

	1 2 3 4 5 6 7 8 9 10 11 12 13 14 15 16
Ped Soft Recall	
Ped Recall	
Rest In Walk	
Modified Rest In Walk	
Ped Reservice	
Flashing Walk	
Advanced Walk	
Delayed Walk	
Ped Yellow Clear	
Ped Red Clear	
Startup In Green	2 6
Startup In Yellow	
Startup Red Clear	
First Phases	
Startup Calls	
Startup Ped Calls	
Flash Entry	2 6
Yellow Flash	2 6
Wag Phases	1 3 6 8
Wag Overlaps	
Manual Control	1 2 3 4 5 6 7 8
Manual Control Omit Ped	
Red Detector Lock	
Yellow Detector Lock	2 6
Active Logic 1 - 16	
Active Logic 17 - 32	
Dynamic/Backup	

DocuSign Envelope ID: 5C03745C-4B01-4834-A65D-B77F558A4F46

514 - 13-0514: NC 191/Brevard Rd @ I-26 EB Ramps
4 - Phase Sequence Page 1
5/21/2021 4:48 PM

Rings	Barrier 1				Barrier 2				Barrier 3				Barrier 4			
1	1	2	0	0	0	4	0	0	0	0	0	0	0	0	0	0
2	0	6	0	0	0	0	0	0	0	0	0	0	0	0	0	0
3	0	0	0	0	0	0	0	0	0	0	0	0	0	0	0	0
4	0	0	0	0	0	0	0	0	0	0	0	0	0	0	0	0

Rings	Barrier 5				Barrier 6				Barrier 7				Barrier 8			
1	0	0	0	0	0	0	0	0	0	0	0	0	0	0	0	0
2	0	0	0	0	0	0	0	0	0	0	0	0	0	0	0	0
3	0	0	0	0	0	0	0	0	0	0	0	0	0	0	0	0
4	0	0	0	0	0	0	0	0	0	0	0	0	0	0	0	0

Phase Directions

1		5		9		13	
2		6		10		14	
3		7		11		15	
4		8		12		16	

DocuSign Envelope ID: 5C03745C-4B01-4834-A65D-B77F558A4F46

514 - 13-0514: NC 191/Brevard Rd @ I-26 EB Ramps
3 - Phase Timing 1
5/21/2021 4:48 PM

Phase Timing Elements	Phase															
	1	2	3	4	5	6	7	8	9	10	11	12	13	14	15	16
Minimum Green 1	10	12	7	7	7	12	7	7	0	0	0	0	0	0	0	0
Minimum Green 2	0	0	0	0	0	0	0	0	0	0	0	0	0	0	0	0
Re-service Green	0	0	0	0	0	0	0	0	0	0	0	0	0	0	0	0
Extension 1 (Gap 1)	2.5	6.0	2.0	5.0	2.0	6.0	2.0	2.0	0.0	0.0	0.0	0.0	0.0	0.0	0.0	0.0
Extension 2 (Gap 2)	0.0	0.0	0.0	0.0	0.0	0.0	0.0	0.0	0.0	0.0	0.0	0.0	0.0	0.0	0.0	0.0
Maximum Green 1	20	60	30	75	30	20	30	30	0	0	0	0	0	0	0	0
Maximum Green 2	0	0	0	0	0	0	0	0	0	0	0	0	0	0	0	0
Yellow Clearance	3.0	4.4	4.0	3.0	4.0	4.7	4.0	4.0	4.0	4.0	4.0	4.0	4.0	4.0	4.0	4.0
Red Clearance	3.3	1.6	2.0	3.9	2.0	1.9	2.0	2.0	2.0	2.0	2.0	2.0	2.0	2.0	2.0	2.0
Red Revert	2.0	2.0	2.0	2.0	2.0	2.0	2.0	2.0	2.0	2.0	2.0	2.0	2.0	2.0	2.0	2.0
Walk 1	0	0	0	0	0	0	0	0	0	0	0	0	0	0	0	0
Walk 2	0	0	0	0	0	0	0	0	0	0	0	0	0	0	0	0
Dont Walk 1	0	0	0	0	0	0	0	0	0	0	0	0	0	0	0	0
Dont Walk 2	0	0	0	0	0	0	0	0	0	0	0	0	0	0	0	0
Walk Advance Time	0.0	0.0	0.0	0.0	0.0	0.0	0.0	0.0	0.0	0.0	0.0	0.0	0.0	0.0	0.0	0.0
Walk Delay Time	0.0	0.0	0.0	0.0	0.0	0.0	0.0	0.0	0.0	0.0	0.0	0.0	0.0	0.0	0.0	0.0
Alternate Walk	0	0	0	0	0	0	0	0	0	0	0	0	0	0	0	0
Alternate Dont Walk	0	0	0	0	0	0	0	0	0	0	0	0	0	0	0	0
Alternate Min Green	0	0	0	0	0	0	0	0	0	0	0	0	0	0	0	0
Dynamic Max / Max 3	0	0	0	0	0	0	0	0	0	0	0	0	0	0	0	0
Dynamic Max Adjust	0.0	0.0	0.0	0.0	0.0	0.0	0.0	0.0	0.0	0.0	0.0	0.0	0.0	0.0	0.0	0.0
Seconds / Actuation	0.0	1.8	0.0	0.0	0.0	1.8	0.0	0.0	0.0	0.0	0.0	0.0	0.0	0.0	0.0	0.0
Max Variable Initial	0	34	0	0	0	34	0	0	0	0	0	0	0	0	0	0
Time Before Reduction	0	15	0	0	0	15	0	0	0	0	0	0	0	0	0	0
Time To Reduce	0	30	0	0	0	30	0	0	0	0	0	0	0	0	0	0
Minimum Gap	0.0	3.0	0.0	0.0	0.0	3.0	0.0	0.0	0.0	0.0	0.0	0.0	0.0	0.0	0.0	0.0
Alt Flash Frequency (0-25.5 Hz)	3.0															

DocuSign Envelope ID: 5C03745C-4B01-4834-A65D-B77F558A4F46

PROJECT REFERENCE NO.	SHEET NO.
I-5504	Sig. 35

PHASING DIAGRAM

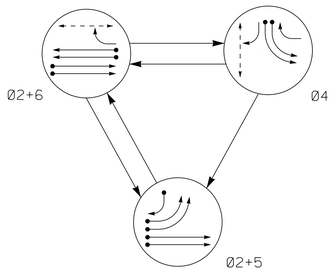

TABLE OF OPERATION				
SIGNAL FACE	PHASE Ø2+5	PHASE Ø2+6	PHASE Ø4	FLASH
21, 22	G	G	R	Y
41, 42	~~R~~	~~R~~	←	~~R~~
43	→	R	~~Y~~	R
51, 52	←	~~R~~	~~R~~	~~R~~
61	R	G	R	Y
62	R	G	R/←	Y
P41, P42	DW	DW	W	DRK
P61, P62	DW	W	DW	DRK

SIGNAL FACE I.D.

All Heads L.E.D.

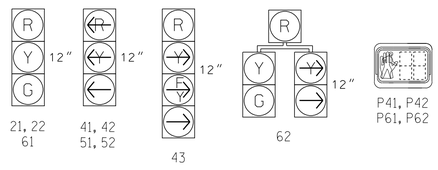

1

OASIS 2070 LOOP & DETECTOR INSTALLATION CHART												
INDUCTIVE LOOPS					DETECTOR PROGRAMMING							
LOOP	SIZE (FT)	DISTANCE FROM STOPBAR (FT)	TURNS	NEW LOOP	PHASE	CALLING	EXTENSION	FULL TIME DELAY	STRETCH TIME	DELAY TIME	SYSTEM LOOP	NEW CARD
2A/S1	6x6	300	5	Y	2	Y	Y	-	-	-	Y	Y
2B/S2	6x6	300	5	Y	2	Y	Y	-	-	-	Y	Y
4A	6x40	0	2-4-2	Y	4	Y	Y	-	-	-	-	Y
4B	6x40	0	2-4-2	Y	4	Y	Y	-	-	-	-	Y
5A	6x40	0	2-4-2	Y	5	Y	Y	-	-	-	-	Y
5B	6x40	0	2-4-2	Y	5	Y	Y	-	-	-	-	Y
5C	6x40	0	2-4-2	Y	5	Y	Y	-	-	15	-	Y
6A/S3	6x6	355	5	Y	6	Y	Y	-	-	-	Y	Y
6B/S4	6x6	355	5	Y	6	Y	Y	-	-	-	Y	Y

NOTES

1. Refer to "Roadway Standard Drawings NCDOT" dated January 2012, "Standard Specifications for Roads and Structures" dated January 2012, and all applicable sections of the latest version of the generic Project Special Provisions. The PSP can be accessed at the following website: https://connect.ncdot.gov/resources/safety/Pages/ITS-Design-Resources.aspx
2. Do not program signal for late night flashing operation unless otherwise directed by the Engineer.
3. Phase 5 may be lagged.
4. Set all detector units to presence mode.
5. Locate new cabinet so as not to obstruct sight distance of vehicles turning right on red.
6. Pedestrian pedestals are conceptual and shown for reference only. See sheets Sig. P1-P3 for pushbutton location details.
7. See pavement marking plans for stop bar and crosswalk lengths.
8. Omit "WALK" and flashing "DON'T WALK" with no pedestrian calls.
9. Program pedestrian heads to countdown the flashing "Don't Walk" time only.
10. Maximum times shown in timing chart are for free-run operation only. Coordinated signal system timing values supersede these values.
11. Portions of high visibility crosswalk not shown for clarity.

3 Phase
Fully Actuated
(Asheville Signal System)

PHASING DIAGRAM DETECTION LEGEND

- DETECTED MOVEMENT
- UNDETECTED MOVEMENT (OVERLAP)
- UNSIGNALIZED MOVEMENT
- PEDESTRIAN MOVEMENT

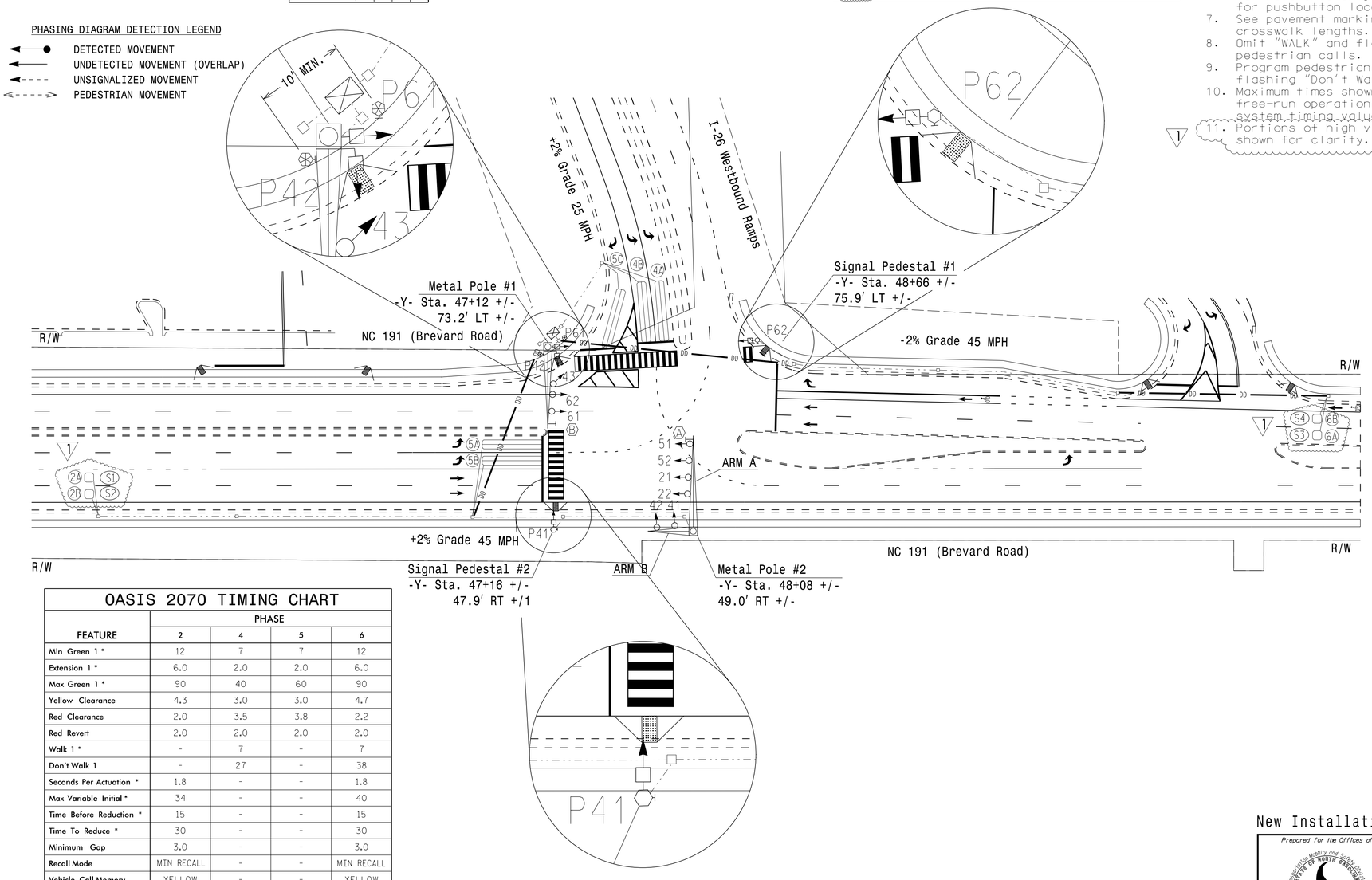

OASIS 2070 TIMING CHART

FEATURE	PHASE 2	PHASE 4	PHASE 5	PHASE 6
Min Green 1 *	12	7	7	12
Extension 1 *	6.0	2.0	2.0	6.0
Max Green 1 *	90	40	60	90
Yellow Clearance	4.3	3.0	3.0	4.7
Red Clearance	2.0	3.5	3.8	2.2
Red Revert	2.0	2.0	2.0	2.0
Walk 1 *	-	7	-	7
Don't Walk 1	-	27	-	38
Seconds Per Actuation *	1.8	-	-	1.8
Max Variable Initial *	34	-	-	40
Time Before Reduction *	15	-	-	15
Time To Reduce *	30	-	-	30
Minimum Gap	3.0	-	-	3.0
Recall Mode	MIN RECALL	-	-	MIN RECALL
Vehicle Call Memory	YELLOW	-	-	YELLOW
Dual Entry	-	-	-	-
Simultaneous Gap	ON	ON	ON	ON

* These values may be field adjusted. Do not adjust Min Green and Extension times for phases 2 and 6 lower than what is shown. Min Green for all other phases should not be lower than 4 seconds.

LEGEND

PROPOSED		EXISTING
○→	Traffic Signal Head	●→
◐→	Modified Signal Head	N/A
⊣	Sign	⊣
□↓	Pedestrian Signal Head With Push Button & Sign	■↓
○	Signal Pole with Guy	●
○	Signal Pole with Sidewalk Guy	●
▭	Inductive Loop Detector	▭
⊠	Controller & Cabinet	⊠
□	Junction Box	■
·-·-·-·	2-in Underground Conduit	·-·-·-·
N/A	Right of Way	— — — —
→	Directional Arrow	→
DD	Directional Drill	N/A
○	Metal Pole with Mastarm	■
⬡	Type II Signal Pedestal	⬢
⊛	Type I Pushbutton Post	✤
Ⓐ	"U-TURN YIELD TO RIGHT TURN" Sign (R10-16)	Ⓐ
Ⓑ	"NO TURNS" Sign (R3-4)	Ⓑ
N/A	Wheelchair Ramp	♿

Blythe RS&H

Prepared In the Office of:
RS&H
ARCHITECTS-ENGINEERS-PLANNERS, INC.
8521 SIX FORKS ROAD, SUITE 400
RALEIGH, NC 27615
(919) 926-4100

New Installation

DOCUMENT NOT CONSIDERED FINAL UNLESS ALL SIGNATURES COMPLETED

Prepared for the Offices of:

NORTH CAROLINA DEPARTMENT OF TRANSPORTATION — Transportation Mobility and Safety Division

750 N.Greenfield Pkwy.Garner,NC 27529

NC 191 (Brevard Road) at I-26 Westbound Ramp

Division 13 Buncombe County Asheville

PLAN DATE:	June 2017	REVIEWED BY:	S.G. Haynie
PREPARED BY:	S.G. Haynie	REVIEWED BY:	C. Haider

REVISIONS	INIT.	DATE
1 Changes to make traffic signal Ethernet compatible	SGH	05/31/19

SCALE 0 40 1"=40'

SEAL

NORTH CAROLINA PROFESSIONAL SEAL 029531 ENGINEER STEVEN G. HAYNIE

Steven G. Haynie 0633DCC0A5C4482...

5/31/2019

SIGNATURE DATE

SIG. INVENTORY NO. 13-1284

31-May-19
P:\Traffic\Signals\Design\Signal Plans\Plan Sheets\I5504_sig_psh_35_131284.dgn
13-1284

DocuSign Envelope ID: 5C03745C-4B01-4834-A65D-B77F558A4F46

PROJECT REFERENCE NO.	SHEET NO.
U-4715 B	Sig.163.0

PHASING DIAGRAM

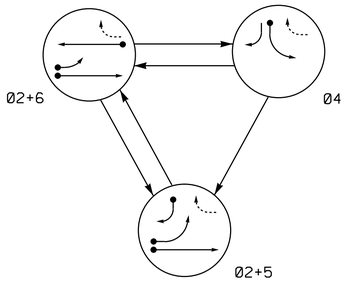

TABLE OF OPERATION				
SIGNAL FACE	PHASE 02+5	PHASE 02+6	PHASE 04	FLASH
21, 22	G	G	R	Y
41	R	R	G	R
42	R/←	R	G	R
51	←	F/↓	~~R~~	~~Y~~
61, 62	R	G	R	Y

PHASING DIAGRAM DETECTION LEGEND

- DETECTED MOVEMENT
- UNDETECTED MOVEMENT (OVERLAP)
- UNSIGNALIZED MOVEMENT
- PEDESTRIAN MOVEMENT

SIGNAL FACE I.D.

All Heads L.E.D.

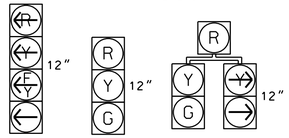

OASIS 2070 LOOP & DETECTOR INSTALLATION CHART												
INDUCTIVE LOOPS					DETECTOR PROGRAMMING							
LOOP	SIZE (FT)	DISTANCE FROM STOPBAR (FT)	TURNS	NEW LOOP	PHASE	CALLING	EXTENSION	FULL TIME DELAY	STRETCH TIME	DELAY TIME	SYSTEM LOOP	NEW CARD
2A	6X6	300	6	-	2	Y	Y	-	-	-	-	Y
4A	6X60	0	2-4-2	-	4	Y	Y	-	-	3	-	Y
5A	6X60	0	2-4-2	-	5	Y	Y	-	-	15	-	Y
					2	Y	Y	Y	-	3	-	Y
5B	6X60	0	2-4-2	-	5	Y	Y	-	-	20	-	Y
6A	6X6	300	5	-	6	Y	Y	-	-	-	-	Y
S1	6X6	+132	5	-	-	-	-	-	-	-	Y	Y

3 Phase Fully Actuated Asheville Signal System

NOTES

1. Refer to "Roadway Standard Drawings NCDOT" dated January 2012 and "Standard Specifications for Roads and Structures" dated January 2012.
2. Do not program signal for late night flashing operation unless otherwise directed by the Engineer.
3. Disconnect and abandon loops as shown.
4. Phase 5 may be lagged.
5. Reposition existing signal head numbered 22.
6. Set all detector units to presence mode.
7. Pavement markings are existing.
8. Maximum times shown in timing chart are for free-run operation only. Coordinated signal system timing values supersede these values.

LEGEND

PROPOSED		EXISTING
○→	Traffic Signal Head	●→
◐→	Modified Signal Head	N/A
⊣	Sign	⊣
□↓	Pedestrian Signal Head With Push Button & Sign	■↓
○	Signal Pole with Guy	●
○	Signal Pole with Sidewalk Guy	●
▭	Inductive Loop Detector	▭
⊠	Controller & Cabinet	⊡
□	Junction Box	■
----------	2-in Underground Conduit	----------
N/A	Right of Way	----------
→	Directional Arrow	→
○	Metal Pole with Mastarm	○
N/A	Wheelchair Ramp	
N/A	Guardrail	
Ⓐ	"YIELD" Sign (R1-2)	Ⓐ
Ⓑ	Right Arrow "ONLY" Sign (R3-5R)	Ⓑ
Ⓒ	Through Arrow "ONLY" Sign (R3-5A)	Ⓒ

OASIS 2070 TIMING CHART				
	PHASE			
FEATURE	2	4	5	6
Min Green 1 *	12	7	7	12
Extension 1 *	6.0	1.0	1.0	6.0
Max Green 1 *	60	25	15	60
Yellow Clearance	5.2	3.0	3.0	5.2
Red Clearance	1.2	2.3	1.4	1.2
Red Revert	2.0	2.0	2.0	2.0
Walk 1 *	-	-	-	-
Don't Walk 1	-	-	-	-
Seconds Per Actuation *	2.5	-	-	2.5
Max Variable Initial *	34	-	-	34
Time Before Reduction *	15	-	-	15
Time To Reduce *	30	-	-	30
Minimum Gap	3.0	-	-	3.0
Recall Mode	MIN RECALL	-	-	MIN RECALL
Vehicle Call Memory	YELLOW	-	-	YELLOW
Dual Entry	-	-	-	-
Simultaneous Gap	ON	ON	ON	ON

* These values may be field adjusted. Do not adjust Min Green and Extension times for phases 2 and 6 lower than what is shown. Min Green for all other phases should not be lower than 4 seconds.

Signal Upgrade

DOCUMENT NOT CONSIDERED FINAL UNLESS ALL SIGNATURES COMPLETED

Prepared In the Offices of:
Transportation Mobility and Safety Division
Signal Design Section
750 N.Greenfield Pkwy.Garner,NC 27529

NC 191 (Brevard Road) at Blue Ridge Parkway Ramp

Division 13 Buncombe County Asheville

PLAN DATE: January 2016 REVIEWED BY: T. J. Williams

PREPARED BY: C. Pierce REVIEWED BY:

SCALE 0 30 1"=30'

REVISIONS	INIT.	DATE

SEAL
NORTH CAROLINA PROFESSIONAL SEAL 024393 ENGINEER TIMOTHY J. WILLIAMS

DocuSigned by: T. J. Williams 8/11/2016

W.O./CONTRACT NO. DATE

SIG. INVENTORY NO. 13-0837

11-AUG-2016 12:18
S:\TSCSDW\TS Signals\Signal Design Section\Western Region\Div-13\U-4715B (Asheville Signal System)\Signal Designs\13-0837\130837_sig_dsn_20160811.dgn
ceperce

DocuSign Envelope ID: 5C03745C-4B01-4834-A65D-B77F558A4F46

837 - 13-0837: NC 191 Brevard Rd @ Blue Ridge Parkway Ramp
B - Scheduling Events 1-100
5/21/2021 2:22 PM

Event #	Event Type	Event Details	Pri LMH	Start Date MM	Start Date DD	Stop Date MM	Stop Date DD	Start Time HH	Start Time MM	Stop Time HH	Stop Time MM	DOW Enabled 1 2 3 4 5 6 7	Del When Done	Cont	Event Groups Assigned 1 2 3 4 5 6 7 8 9 10 11 12 13 14 15 16
1	None			0	0	0	0	0	0	0	0		N	N	
2	None			0	0	0	0	0	0	0	0		N	N	
3	None			0	0	0	0	0	0	0	0		N	N	
4	None			0	0	0	0	0	0	0	0		N	N	
5	None			0	0	0	0	0	0	0	0		N	N	
6	None			0	0	0	0	0	0	0	0		N	N	
7	None			0	0	0	0	0	0	0	0		N	N	
8	None			0	0	0	0	0	0	0	0		N	N	
9	None			0	0	0	0	0	0	0	0		N	N	
10	None			0	0	0	0	0	0	0	0		N	N	
11	None			0	0	0	0	0	0	0	0		N	N	
12	None			0	0	0	0	0	0	0	0		N	N	
13	None			0	0	0	0	0	0	0	0		N	N	
14	None			0	0	0	0	0	0	0	0		N	N	
15	None			0	0	0	0	0	0	0	0		N	N	
16	None			0	0	0	0	0	0	0	0		N	N	
17	None			0	0	0	0	0	0	0	0		N	N	
18	None			0	0	0	0	0	0	0	0		N	N	
19	None			0	0	0	0	0	0	0	0		N	N	
20	None			0	0	0	0	0	0	0	0		N	N	
21	None			0	0	0	0	0	0	0	0		N	N	
22	None			0	0	0	0	0	0	0	0		N	N	
23	None			0	0	0	0	0	0	0	0		N	N	
24	None			0	0	0	0	0	0	0	0		N	N	
25	None			0	0	0	0	0	0	0	0		N	N	
26	None			0	0	0	0	0	0	0	0		N	N	
27	None			0	0	0	0	0	0	0	0		N	N	
28	None			0	0	0	0	0	0	0	0		N	N	
29	None			0	0	0	0	0	0	0	0		N	N	
30	None			0	0	0	0	0	0	0	0		N	N	
31	None			0	0	0	0	0	0	0	0		N	N	
32	None			0	0	0	0	0	0	0	0		N	N	
33	None			0	0	0	0	0	0	0	0		N	N	
34	None			0	0	0	0	0	0	0	0		N	N	
35	None			0	0	0	0	0	0	0	0		N	N	
36	None			0	0	0	0	0	0	0	0		N	N	
37	None			0	0	0	0	0	0	0	0		N	N	
38	None			0	0	0	0	0	0	0	0		N	N	
39	None			0	0	0	0	0	0	0	0		N	N	
40	None			0	0	0	0	0	0	0	0		N	N	
41	None			0	0	0	0	0	0	0	0		N	N	
42	None			0	0	0	0	0	0	0	0		N	N	
43	None			0	0	0	0	0	0	0	0		N	N	
44	None			0	0	0	0	0	0	0	0		N	N	
45	None			0	0	0	0	0	0	0	0		N	N	
46	None			0	0	0	0	0	0	0	0		N	N	
47	None			0	0	0	0	0	0	0	0		N	N	
48	None			0	0	0	0	0	0	0	0		N	N	
49	None			0	0	0	0	0	0	0	0		N	N	
50	None			0	0	0	0	0	0	0	0		N	N	

DocuSign Envelope ID: 5C03745C-4B01-4834-A65D-B77F558A4F46

837 - 13-0837: NC 191 Brevard Rd @ Blue Ridge Parkway Ramp
9 - Coordination Plan 1
5/21/2021 2:22 PM

Coordination Plan # 1

Cycle length (0-999 sec)	150
Min Transition Cycle (0-999 sec)	100
Max Transition Cycle (0-999 sec)	200

Offset # or Ring:	1	2	3	4
Offsets (0-999 sec)	146	0	0	0
Act Coord Phase Min Green (0-255)	0	0	0	0

Splits (0-255 sec)

Phase	1	2	3	4	5	6	7	8
Split	0	110	0	40	28	82	0	0
Phase	9	10	11	12	13	14	15	16
Split	0	0	0	0	0	0	0	0

Verify Plan Data

Phase/Function Settings:

	1	2	3	4	5	6	7	8	9	10	11	12	13	14	15	16
Coordinated Phase		2				6										
Float Force Offs																
Hold to Force Off																
Hi Priority Ped																
Dynamic/Backup																

Options:	**(Y/N)**	
Split/Timing in percent?	N	
*Permissive Mode (0-4)	0	*0 = Auto
Enable Transition Permissive Mode?	N	1 = Open
Adjust Non-Coordinated Splits?	Y	2 = Manual
Cycle Once per Cycle Length?	Y	3 = Window
		4 = Walk

Active Pages:	
Phase Sequence Page (1-12)	1
Phase Timing Page (1-4)	2
Phase Control Page (1-4)	1
OverLap Control Page (1-4)	1
Input Page (1-4)	1
Output Page (1-4)	1

Global Manual Permissive windows:

*Applies when "Window" permissive is selected

Manual Perm 1 End Point (0-255 sec)	0
Manual Perm 2 Start Point (0-255 sec)	0
Manual Perm 2 End Point (0-255 sec)	0

Manual Permissives by Phase:

*Applies when "Manual" permissive is selected

	Vehicle		Pedestrian	
(0-255 sec)	Start	Stop	Start	Stop
Phase 1	0	0	0	0
Phase 2	0	0	0	0
Phase 3	0	0	0	0
Phase 4	0	0	0	0
Phase 5	0	0	0	0
Phase 6	0	0	0	0
Phase 7	0	0	0	0
Phase 8	0	0	0	0
Phase 9	0	0	0	0
Phase 10	0	0	0	0
Phase 11	0	0	0	0
Phase 12	0	0	0	0
Phase 13	0	0	0	0
Phase 14	0	0	0	0
Phase 15	0	0	0	0
Phase 16	0	0	0	0

DocuSign Envelope ID: 5C03745C-4B01-4834-A65D-B77F558A4F46

837 - 13-0837: NC 191 Brevard Rd @ Blue Ridge Parkway Ramp
9 - Coordination Plan 2
5/21/2021 2:22 PM

Coordination Plan # 2

Cycle length (0-999 sec)	110
Min Transition Cycle (0-999 sec)	75
Max Transition Cycle (0-999 sec)	180

Offset # or Ring:	1	2	3	4
Offsets (0-999 sec)	37	0	0	0
Act Coord Phase Min Green (0-255)	0	0	0	0

Splits (0-255 sec)

Phase	1	2	3	4	5	6	7	8
Split	0	76	0	34	20	56	0	0
Phase	9	10	11	12	13	14	15	16
Split	0	0	0	0	0	0	0	0

Verify Plan Data

Phase/Function Settings:

	1	2	3	4	5	6	7	8	9	10	11	12	13	14	15	16
Coordinated Phase		2				6										
Float Force Offs																
Hold to Force Off																
Hi Priority Ped																
Dynamic/Backup																

Options:	**(Y/N)**	
Split/Timing in percent?	N	
*Permissive Mode (0-4)	0	*0 = Auto
Enable Transition Permissive Mode?	N	1 = Open
Adjust Non-Coordinated Splits?	Y	2 = Manual
Cycle Once per Cycle Length?	Y	3 = Window
		4 = Walk

Active Pages:	
Phase Sequence Page (1-12)	1
Phase Timing Page (1-4)	2
Phase Control Page (1-4)	1
OverLap Control Page (1-4)	1
Input Page (1-4)	1
Output Page (1-4)	1

Global Manual Permissive windows:

*Applies when "Window" permissive is selected

Manual Perm 1 End Point (0-255 sec)	0
Manual Perm 2 Start Point (0-255 sec)	0
Manual Perm 2 End Point (0-255 sec)	0

Manual Permissives by Phase:

*Applies when "Manual" permissive is selected

	Vehicle		Pedestrian	
(0-255 sec)	Start	Stop	Start	Stop
Phase 1	0	0	0	0
Phase 2	0	0	0	0
Phase 3	0	0	0	0
Phase 4	0	0	0	0
Phase 5	0	0	0	0
Phase 6	0	0	0	0
Phase 7	0	0	0	0
Phase 8	0	0	0	0
Phase 9	0	0	0	0
Phase 10	0	0	0	0
Phase 11	0	0	0	0
Phase 12	0	0	0	0
Phase 13	0	0	0	0
Phase 14	0	0	0	0
Phase 15	0	0	0	0
Phase 16	0	0	0	0

DocuSign Envelope ID: 5C03745C-4B01-4834-A65D-B77F558A4F46

837 - 13-0837: NC 191 Brevard Rd @ Blue Ridge Parkway Ramp
9 - Coordination Plan 3
5/21/2021 2:22 PM

Coordination Plan # 3

Cycle length (0-999 sec)	130
Min Transition Cycle (0-999 sec)	80
Max Transition Cycle (0-999 sec)	200

Offset # or Ring:	1	2	3	4
Offsets (0-999 sec)	48	0	0	0
Act Coord Phase Min Green (0-255)	0	0	0	0

Splits (0-255 sec)

Phase	1	2	3	4	5	6	7	8
Split	0	93	0	37	20	73	0	0
Phase	9	10	11	12	13	14	15	16
Split	0	0	0	0	0	0	0	0

Verify Plan Data

Phase/Function Settings:

	1	2	3	4	5	6	7	8	9	10	11	12	13	14	15	16
Coordinated Phase		2				6										
Float Force Offs																
Hold to Force Off																
Hi Priority Ped																
Dynamic/Backup																

Options:	**(Y/N)**	
Split/Timing in percent?	N	
*Permissive Mode (0-4)	0	*0 = Auto
Enable Transition Permissive Mode?	N	1 = Open
Adjust Non-Coordinated Splits?	Y	2 = Manual
Cycle Once per Cycle Length?	Y	3 = Window
		4 = Walk

Active Pages:	
Phase Sequence Page (1-12)	1
Phase Timing Page (1-4)	2
Phase Control Page (1-4)	1
OverLap Control Page (1-4)	1
Input Page (1-4)	1
Output Page (1-4)	1

Global Manual Permissive windows:

*Applies when "Window" permissive is selected

Manual Perm 1 End Point (0-255 sec)	0
Manual Perm 2 Start Point (0-255 sec)	0
Manual Perm 2 End Point (0-255 sec)	0

Manual Permissives by Phase:

*Applies when "Manual" permissive is selected

	Vehicle		Pedestrian	
(0-255 sec)	Start	Stop	Start	Stop
Phase 1	0	0	0	0
Phase 2	0	0	0	0
Phase 3	0	0	0	0
Phase 4	0	0	0	0
Phase 5	0	0	0	0
Phase 6	0	0	0	0
Phase 7	0	0	0	0
Phase 8	0	0	0	0
Phase 9	0	0	0	0
Phase 10	0	0	0	0
Phase 11	0	0	0	0
Phase 12	0	0	0	0
Phase 13	0	0	0	0
Phase 14	0	0	0	0
Phase 15	0	0	0	0
Phase 16	0	0	0	0

DocuSign Envelope ID: 5C03745C-4B01-4834-A65D-B77F558A4F46

837 - 13-0837: NC 191 Brevard Rd @ Blue Ridge Parkway Ramp
9 - Coordination Plan 4
5/21/2021 2:22 PM

Coordination Plan # 4

Cycle length (0-999 sec)	150
Min Transition Cycle (0-999 sec)	100
Max Transition Cycle (0-999 sec)	200

Offset # or Ring:	1	2	3	4
Offsets (0-999 sec)	38	0	0	0
Act Coord Phase Min Green (0-255)	0	0	0	0

Splits (0-255 sec)

Phase	1	2	3	4	5	6	7	8
Split	0	120	0	30	25	95	0	0
Phase	9	10	11	12	13	14	15	16
Split	0	0	0	0	0	0	0	0

Verify Plan Data

Phase/Function Settings:

	1	2	3	4	5	6	7	8	9	10	11	12	13	14	15	16
Coordinated Phase		2				6										
Float Force Offs																
Hold to Force Off																
Hi Priority Ped																
Dynamic/Backup																

Options:	**(Y/N)**	
Split/Timing in percent?	N	
*Permissive Mode (0-4)	0	*0 = Auto
Enable Transition Permissive Mode?	N	1 = Open
Adjust Non-Coordinated Splits?	Y	2 = Manual
Cycle Once per Cycle Length?	Y	3 = Window
		4 = Walk

Active Pages:	
Phase Sequence Page (1-12)	1
Phase Timing Page (1-4)	2
Phase Control Page (1-4)	1
OverLap Control Page (1-4)	1
Input Page (1-4)	1
Output Page (1-4)	1

Global Manual Permissive windows:

*Applies when "Window" permissive is selected

Manual Perm 1 End Point (0-255 sec)	0
Manual Perm 2 Start Point (0-255 sec)	0
Manual Perm 2 End Point (0-255 sec)	0

Manual Permissives by Phase:

*Applies when "Manual" permissive is selected

	Vehicle		Pedestrian	
(0-255 sec)	Start	Stop	Start	Stop
Phase 1	0	0	0	0
Phase 2	0	0	0	0
Phase 3	0	0	0	0
Phase 4	0	0	0	0
Phase 5	0	0	0	0
Phase 6	0	0	0	0
Phase 7	0	0	0	0
Phase 8	0	0	0	0
Phase 9	0	0	0	0
Phase 10	0	0	0	0
Phase 11	0	0	0	0
Phase 12	0	0	0	0
Phase 13	0	0	0	0
Phase 14	0	0	0	0
Phase 15	0	0	0	0
Phase 16	0	0	0	0

DocuSign Envelope ID: 5C03745C-4B01-4834-A65D-B77F558A4F46

837 - 13-0837: NC 191 Brevard Rd @ Blue Ridge Parkway Ramp
9 - Coordination Plan 13
5/21/2021 2:22 PM

Coordination Plan # 13

Cycle length (0-999 sec)	65
Min Transition Cycle (0-999 sec)	45
Max Transition Cycle (0-999 sec)	80

Offset # or Ring:	1	2	3	4
Offsets (0-999 sec)	39	0	0	0
Act Coord Phase Min Green (0-255)	0	0	0	0

Splits (0-255 sec)

Phase	1	2	3	4	5	6	7	8
Split	0	47	0	18	15	32	0	0
Phase	9	10	11	12	13	14	15	16
Split	0	0	0	0	0	0	0	0

Verify Plan Data

Phase/Function Settings:

	1	2	3	4	5	6	7	8	9	10	11	12	13	14	15	16
Coordinated Phase		2				6										
Float Force Offs																
Hold to Force Off																
Hi Priority Ped																
Dynamic/Backup																

Options:	**(Y/N)**	
Split/Timing in percent?	N	
*Permissive Mode (0-4)	0	*0 = Auto
Enable Transition Permissive Mode?	N	1 = Open
Adjust Non-Coordinated Splits?	Y	2 = Manual
Cycle Once per Cycle Length?	Y	3 = Window
		4 = Walk

Active Pages:	
Phase Sequence Page (1-12)	2
Phase Timing Page (1-4)	1
Phase Control Page (1-4)	1
OverLap Control Page (1-4)	1
Input Page (1-4)	1
Output Page (1-4)	1

Global Manual Permissive windows:

*Applies when "Window" permissive is selected

Manual Perm 1 End Point (0-255 sec)	0
Manual Perm 2 Start Point (0-255 sec)	0
Manual Perm 2 End Point (0-255 sec)	0

Manual Permissives by Phase:

*Applies when "Manual" permissive is selected

	Vehicle		Pedestrian	
(0-255 sec)	Start	Stop	Start	Stop
Phase 1	0	0	0	0
Phase 2	0	0	0	0
Phase 3	0	0	0	0
Phase 4	0	0	0	0
Phase 5	0	0	0	0
Phase 6	0	0	0	0
Phase 7	0	0	0	0
Phase 8	0	0	0	0
Phase 9	0	0	0	0
Phase 10	0	0	0	0
Phase 11	0	0	0	0
Phase 12	0	0	0	0
Phase 13	0	0	0	0
Phase 14	0	0	0	0
Phase 15	0	0	0	0
Phase 16	0	0	0	0

DocuSign Envelope ID: 5C03745C-4B01-4834-A65D-B77F558A4F46

837 - 13-0837: NC 191 Brevard Rd @ Blue Ridge Parkway Ramp
3 - Phase Timing 1
5/21/2021 2:22 PM

Phase Timing Elements	Phase															
	1	2	3	4	5	6	7	8	9	10	11	12	13	14	15	16
Minimum Green 1	0	12	0	7	7	12	0	0	0	0	0	0	0	0	0	0
Minimum Green 2	0	0	0	0	0	0	0	0	0	0	0	0	0	0	0	0
Re-service Green	0	0	0	0	0	0	0	0	0	0	0	0	0	0	0	0
Extension 1 (Gap 1)	0.0	6.0	0.0	3.0	1.5	6.0	0.0	0.0	0.0	0.0	0.0	0.0	0.0	0.0	0.0	0.0
Extension 2 (Gap 2)	0.0	0.0	0.0	0.0	0.0	0.0	0.0	0.0	0.0	0.0	0.0	0.0	0.0	0.0	0.0	0.0
Maximum Green 1	0	60	0	25	15	60	0	0	0	0	0	0	0	0	0	0
Maximum Green 2	0	0	0	0	0	0	0	0	0	0	0	0	0	0	0	0
Yellow Clearance	3.0	5.2	3.0	3.0	3.0	5.2	4.0	4.0	4.0	4.0	4.0	4.0	4.0	4.0	4.0	4.0
Red Clearance	0.0	1.2	0.0	2.3	1.4	1.2	2.0	2.0	2.0	2.0	2.0	2.0	2.0	2.0	2.0	2.0
Red Revert	0.0	2.0	0.0	2.0	2.0	2.0	2.0	2.0	2.0	2.0	2.0	2.0	2.0	2.0	2.0	2.0
Walk 1	0	0	0	0	0	0	0	0	0	0	0	0	0	0	0	0
Walk 2	0	0	0	0	0	0	0	0	0	0	0	0	0	0	0	0
Dont Walk 1	0	0	0	0	0	0	0	0	0	0	0	0	0	0	0	0
Dont Walk 2	0	0	0	0	0	0	0	0	0	0	0	0	0	0	0	0
Walk Advance Time	0.0	0.0	0.0	0.0	0.0	0.0	0.0	0.0	0.0	0.0	0.0	0.0	0.0	0.0	0.0	0.0
Walk Delay Time	0.0	0.0	0.0	0.0	0.0	0.0	0.0	0.0	0.0	0.0	0.0	0.0	0.0	0.0	0.0	0.0
Alternate Walk	0	0	0	0	0	0	0	0	0	0	0	0	0	0	0	0
Alternate Dont Walk	0	0	0	0	0	0	0	0	0	0	0	0	0	0	0	0
Alternate Min Green	0	0	0	0	0	0	0	0	0	0	0	0	0	0	0	0
Dynamic Max / Max 3	0	0	0	0	0	0	0	0	0	0	0	0	0	0	0	0
Dynamic Max Adjust	0.0	0.0	0.0	0.0	0.0	0.0	0.0	0.0	0.0	0.0	0.0	0.0	0.0	0.0	0.0	0.0
Seconds / Actuation	0.0	2.5	0.0	0.0	0.0	2.5	0.0	0.0	0.0	0.0	0.0	0.0	0.0	0.0	0.0	0.0
Max Variable Initial	0	34	0	0	0	34	0	0	0	0	0	0	0	0	0	0
Time Before Reduction	0	15	0	0	0	15	0	0	0	0	0	0	0	0	0	0
Time To Reduce	0	30	0	0	0	30	0	0	0	0	0	0	0	0	0	0
Minimum Gap	0.0	3.0	0.0	0.0	0.0	3.0	0.0	0.0	0.0	0.0	0.0	0.0	0.0	0.0	0.0	0.0
Alt Flash Frequency (0-25.5 Hz)	1.0															

DocuSign Envelope ID: 5C03745C-4B01-4834-A65D-B77F558A4F46

837 - 13-0837: NC 191 Brevard Rd @ Blue Ridge Parkway Ramp
4 - Phase Sequence Page 1
5/21/2021 2:22 PM

Rings	Barrier 1				Barrier 2				Barrier 3				Barrier 4			
1	0	2	0	0	0	4	0	0	0	0	0	0	0	0	0	0
2	5	6	0	0	0	0	0	0	0	0	0	0	0	0	0	0
3	0	0	0	0	0	0	0	0	0	0	0	0	0	0	0	0
4	0	0	0	0	0	0	0	0	0	0	0	0	0	0	0	0

Rings	Barrier 5				Barrier 6				Barrier 7				Barrier 8			
1	0	0	0	0	0	0	0	0	0	0	0	0	0	0	0	0
2	0	0	0	0	0	0	0	0	0	0	0	0	0	0	0	0
3	0	0	0	0	0	0	0	0	0	0	0	0	0	0	0	0
4	0	0	0	0	0	0	0	0	0	0	0	0	0	0	0	0

Phase Directions

1		5		9		13	
2		6		10		14	
3		7		11		15	
4		8		12		16	

DocuSign Envelope ID: 5C03745C-4B01-4834-A65D-B77F558A4F46

837 - 13-0837: NC 191 Brevard Rd @ Blue Ridge Parkway Ramp
4 - Phase Sequence Page 2
5/21/2021 2:22 PM

Rings	Barrier 1				Barrier 2				Barrier 3				Barrier 4			
1	0	2	0	0	0	4	0	0	0	0	0	0	0	0	0	0
2	0	6	5	0	0	0	0	0	0	0	0	0	0	0	0	0
3	0	0	0	0	0	0	0	0	0	0	0	0	0	0	0	0
4	0	0	0	0	0	0	0	0	0	0	0	0	0	0	0	0

Rings	Barrier 5				Barrier 6				Barrier 7				Barrier 8			
1	0	0	0	0	0	0	0	0	0	0	0	0	0	0	0	0
2	0	0	0	0	0	0	0	0	0	0	0	0	0	0	0	0
3	0	0	0	0	0	0	0	0	0	0	0	0	0	0	0	0
4	0	0	0	0	0	0	0	0	0	0	0	0	0	0	0	0

Phase Directions

1		5		9		13	
2		6		10		14	
3		7		11		15	
4		8		12		16	

DocuSign Envelope ID: 5C03745C-4B01-4834-A65D-B77F558A4F46

837 - 13-0837: NC 191 Brevard Rd @ Blue Ridge Parkway Ramp
2-1 Phase Control Functions Page 1
5/21/2021 2:22 PM

	1 2 3 4 5 6 7 8 9 10 11 12 13 14 15 16
Time Min 2	
Time Extension 2	
Time Max 2	
Soft Recall	
Minimum Recall	2 6
Maximum Recall 1	
Maximum Recall 2	
Call Non-Act 1	
Call Non-Act 2	
Omit Phase	
Dual Entry	
No Skip	
Added Extension	
Simultaneous Gap	1 2 3 4 5 6 7 8
Guaranteed Passage	
Green Interval Flash	
Fast Green Flash	
Red Rest	
Backup Protection	
Inhibit Reservice	
Inhibit Max (Coord)	1 2 3 4 5 6 7 8 9 10 11 12 13 14 15 16
Inhibit Coordination	
Dynamic Max/Max3	
Variable Initial	2 6
Gap Reduction	2 6
Omit Pedestrian	
Time Walk 2	
Time FDWalk 2	

	1 2 3 4 5 6 7 8 9 10 11 12 13 14 15 16
Ped Soft Recall	
Ped Recall	
Rest In Walk	
Modified Rest In Walk	
Ped Reservice	
Flashing Walk	
Advanced Walk	
Delayed Walk	
Ped Yellow Clear	
Ped Red Clear	
Startup In Green	2 6
Startup In Yellow	
Startup Red Clear	
First Phases	
Startup Calls	
Startup Ped Calls	
Flash Entry	2 6
Yellow Flash	2 6
Wag Phases	1 3 6 8
Wag Overlaps	
Manual Control	1 2 3 4 5 6 7 8
Manual Control Omit Ped	
Red Detector Lock	
Yellow Detector Lock	2 6
Active Logic 1 - 16	1 2 3
Active Logic 17 - 32	
Dynamic/Backup	

DocuSign Envelope ID: 5C03745C-4B01-4834-A65D-B77F558A4F46

837 - 13-0837: NC 191 Brevard Rd @ Blue Ridge Parkway Ramp
3 - Phase Timing 2
5/21/2021 2:22 PM

Phase Timing Elements	Phase															
	1	2	3	4	5	6	7	8	9	10	11	12	13	14	15	16
Minimum Green 1	0	12	0	7	7	12	0	0	0	0	0	0	0	0	0	0
Minimum Green 2	0	0	0	0	0	0	0	0	0	0	0	0	0	0	0	0
Re-service Green	0	0	0	0	0	0	0	0	0	0	0	0	0	0	0	0
Extension 1 (Gap 1)	0.0	6.0	0.0	2.0	1.0	6.0	0.0	0.0	0.0	0.0	0.0	0.0	0.0	0.0	0.0	0.0
Extension 2 (Gap 2)	0.0	0.0	0.0	0.0	0.0	0.0	0.0	0.0	0.0	0.0	0.0	0.0	0.0	0.0	0.0	0.0
Maximum Green 1	0	60	0	25	15	60	0	0	0	0	0	0	0	0	0	0
Maximum Green 2	0	0	0	0	0	0	0	0	0	0	0	0	0	0	0	0
Yellow Clearance	3.0	5.2	3.0	3.0	3.0	5.2	4.0	4.0	4.0	4.0	4.0	4.0	4.0	4.0	4.0	4.0
Red Clearance	0.0	1.2	0.0	2.3	1.4	1.2	2.0	2.0	2.0	2.0	2.0	2.0	2.0	2.0	2.0	2.0
Red Revert	0.0	2.0	0.0	2.0	2.0	2.0	2.0	2.0	2.0	2.0	2.0	2.0	2.0	2.0	2.0	2.0
Walk 1	0	0	0	0	0	0	0	0	0	0	0	0	0	0	0	0
Walk 2	0	0	0	0	0	0	0	0	0	0	0	0	0	0	0	0
Dont Walk 1	0	0	0	0	0	0	0	0	0	0	0	0	0	0	0	0
Dont Walk 2	0	0	0	0	0	0	0	0	0	0	0	0	0	0	0	0
Walk Advance Time	0.0	0.0	0.0	0.0	0.0	0.0	0.0	0.0	0.0	0.0	0.0	0.0	0.0	0.0	0.0	0.0
Walk Delay Time	0.0	0.0	0.0	0.0	0.0	0.0	0.0	0.0	0.0	0.0	0.0	0.0	0.0	0.0	0.0	0.0
Alternate Walk	0	0	0	0	0	0	0	0	0	0	0	0	0	0	0	0
Alternate Dont Walk	0	0	0	0	0	0	0	0	0	0	0	0	0	0	0	0
Alternate Min Green	0	0	0	0	0	0	0	0	0	0	0	0	0	0	0	0
Dynamic Max / Max 3	0	0	0	0	0	0	0	0	0	0	0	0	0	0	0	0
Dynamic Max Adjust	0.0	0.0	0.0	0.0	0.0	0.0	0.0	0.0	0.0	0.0	0.0	0.0	0.0	0.0	0.0	0.0
Seconds / Actuation	0.0	2.5	0.0	0.0	0.0	2.5	0.0	0.0	0.0	0.0	0.0	0.0	0.0	0.0	0.0	0.0
Max Variable Initial	0	34	0	0	0	34	0	0	0	0	0	0	0	0	0	0
Time Before Reduction	0	15	0	0	0	15	0	0	0	0	0	0	0	0	0	0
Time To Reduce	0	30	0	0	0	30	0	0	0	0	0	0	0	0	0	0
Minimum Gap	0.0	3.0	0.0	0.0	0.0	3.0	0.0	0.0	0.0	0.0	0.0	0.0	0.0	0.0	0.0	0.0
Alt Flash Frequency (0-25.5 Hz)	1.0															

DocuSign Envelope ID: 5C03745C-4B01-4834-A65D-B77F558A4F46

PROJECT REFERENCE NO.	SHEET NO.
N/A	Sig. 1.0

PHASING DIAGRAM

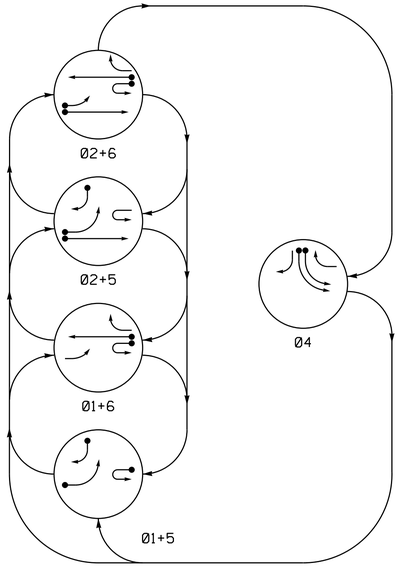

PHASING DIAGRAM DETECTION LEGEND

- DETECTED MOVEMENT
- UNDETECTED MOVEMENT (OVERLAP)
- UNSIGNALIZED MOVEMENT
- PEDESTRIAN MOVEMENT

TABLE OF OPERATION

SIGNAL FACE	PHASE 01+05	01+06	02+05	02+06	04	FLASH
11			(R) (Y)	(R) (Y)	(R)	(Y)
21, 22	R	R	G	G	R	Y
41	R	R	R	R	G	R
42	R	R	R	R	G	R
51	←	(Y) ←	←	(Y) ←	(R)	(Y)
61	R	G	R	G	R	Y
62	R	G	R	G	R	Y

SIGNAL FACE I.D.

All Heads L.E.D.

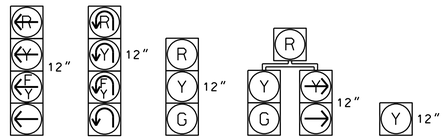

OASIS 2070 LOOP & DETECTOR INSTALLATION CHART

INDUCTIVE LOOPS					DETECTOR PROGRAMMING							
LOOP	SIZE (FT)	DISTANCE FROM STOPBAR (FT)	TURNS	NEW LOOP	PHASE	CALLING	EXTENSION	FULL TIME DELAY	STRETCH TIME	DELAY TIME	SYSTEM LOOP	NEW CARD
1A	6X40	0	2-4-2	Y	1	Y	Y	-	-	15	-	Y
					6	Y	Y	-	-	-	-	Y
2A	6X6	70	5	-	2	Y	Y	-	-	-	-	-
4A	6X40	0	2-4-2	-	4	Y	Y	-	-	-	-	-
4B	6X40	0	2-4-2	-	4	Y	Y	-	-	-	-	-
5A	6X40	0	2-4-2	-	5	Y	Y	-	-	15	-	-
					2	Y	Y	-	-	-	-	-
5B	6X40	0	2-4-2	-	5	Y	Y	-	-	15	-	-
6A	6X6	70	5	-	6	Y	Y	-	-	-	-	-
S1	6X6	+200	5	-	-	-	-	-	-	-	Y	-
S2	6X6	+200	5	-	-	-	-	-	-	-	Y	-

5 Phase
Fully Actuated
Asheville Signal System

NOTES

1. Refer to "Roadway Standard Drawings NCDOT" dated January 2018 and "Standard Specifications for Roads and Structures" dated January 2018.
2. Do not program signal for late night flashing operation unless otherwise directed by the Engineer.
3. Phase 1 and/or phase 5 may be lagged.
4. Renumber existing signal heads 62 and 63, to 61 and 62, respectively.
5. Set all detector units to presence mode.
6. Pavement markings are existing.
7. Maximum times shown in timing chart are for free-run operation only. Coordinated signal system timing values supersede these values.
8. Flash beacons 23 and 24 during Phase 2 Yellow and Phase 2 Red intervals. (See electrical details)

LEGEND

PROPOSED		EXISTING
	Traffic Signal Head	
	Modified Signal Head	N/A
	Sign	
	Pedestrian Signal Head With Push Button & Sign	
	Signal Pole with Guy	
	Signal Pole with Sidewalk Guy	
	Inductive Loop Detector	
	Controller & Cabinet	
	Junction Box	
	2-in Underground Conduit	
N/A	Right of Way	
	Directional Arrow	
N/A	Guardrail	
	Metal Pole with Mastarm	
	Type II Signal Pedestal	
Ⓐ	Left Arrow "ONLY" Sign (R3-5L)	Ⓐ
Ⓑ	Right Arrow "ONLY" Sign (R3-5R)	Ⓑ
Ⓒ	"BE PREPARED TO STOP" Sign (W3-4) (See Figure 1)	Ⓒ
Ⓓ	"WHEN FLASHING" Sign (W16-3P) (See Figure 1)	Ⓓ

OASIS 2070 TIMING CHART

FEATURE	PHASE 1	2	4	5	6
Min Green 1 *	7	10	7	7	10
Extension 1 *	2.0	3.0	2.0	2.0	3.0
Max Green 1 *	15	60	25	15	60
Yellow Clearance	3.0	4.6	3.3	3.3	4.6
Red Clearance	3.3	2.7	3.5	3.4	2.7
Red Revert	2.0	2.0	2.0	2.0	2.0
Walk 1 *	-	-	-	-	-
Don't Walk 1	-	-	-	-	-
Seconds Per Actuation *	-	-	-	-	-
Max Variable Initial *	-	-	-	-	-
Time Before Reduction *	-	-	-	-	-
Time To Reduce *	-	-	-	-	-
Minimum Gap	-	-	-	-	-
Recall Mode	-	MIN RECALL	-	-	MIN RECALL
Vehicle Call Memory	-	YELLOW	-	-	YELLOW
Dual Entry	-	-	-	-	-
Simultaneous Gap	ON	ON	ON	ON	ON

* These values may be field adjusted. Do not adjust Min Green and Extension times for phases 2 and 6 lower than what is shown. Min Green for all other phases should not be lower than 4 seconds.

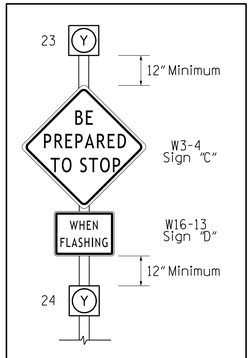

FIGURE 1

TABLE OF OPERATION

SIGNAL FACE	INTERVAL 1	2
23	ON	OFF
24	OFF	ON

Signal Upgrade

DOCUMENT NOT CONSIDERED FINAL UNLESS ALL SIGNATURES COMPLETED

Prepared in the Offices of:
Transportation Mobility and Safety Division
NORTH CAROLINA DEPARTMENT OF TRANSPORTATION
Signal Design Section
750 N.Greenfield Pkwy.Garner,NC 27529

NC 146 (Long Shoals Rd.)
at
SR 3501 (Clayton Rd.)

Division 13 Buncombe County Asheville

PLAN DATE:	May 2019	REVIEWED BY:	T.J. Williams
PREPARED BY:	R.N. Zinser	REVIEWED BY:	

SCALE 0 30 1"=30'

REVISIONS	INIT.	DATE

SEAL
NORTH CAROLINA PROFESSIONAL SEAL 043914 ENGINEER RICHARD N. ZINSER

DocuSigned by: R. N. Zinser F138897347226BF 7/8/2019 DATE

SIG. INVENTORY NO. I3-0729

08-JUL-2019 12:48
\\ASSETMGT\IS Signals\Signal Design Section\Western Region\Div-13\I3-0729\I30729_sig_dsn_2019mmdd.dgn
rnzinser

DocuSign Envelope ID: 5C03745C-4B01-4834-A65D-B77F558A4F46

729 - 13-0729: NC 146/Long Shoals Road @ SR 3501/Clayton Road
B - Scheduling Events 1-100
5/21/2021 1:53 PM

Event #	Event Type	Event Details	Pri LMH	Start Date MM	Start Date DD	Stop Date MM	Stop Date DD	Start Time HH	Start Time MM	Stop Time HH	Stop Time MM	DOW Enabled 1 2 3 4 5 6 7	Del When Done	Cont	Event Groups Assigned 1 2 3 4 5 6 7 8 9 10 11 12 13 14 15 16
1	None			0	0	0	0	0	0	0	0		N	N	
2	None			0	0	0	0	0	0	0	0		N	N	
3	None			0	0	0	0	0	0	0	0		N	N	
4	None			0	0	0	0	0	0	0	0		N	N	
5	None			0	0	0	0	0	0	0	0		N	N	
6	None			0	0	0	0	0	0	0	0		N	N	
7	None			0	0	0	0	0	0	0	0		N	N	
8	None			0	0	0	0	0	0	0	0		N	N	
9	None			0	0	0	0	0	0	0	0		N	N	
10	None			0	0	0	0	0	0	0	0		N	N	
11	None			0	0	0	0	0	0	0	0		N	N	
12	None			0	0	0	0	0	0	0	0		N	N	
13	None			0	0	0	0	0	0	0	0		N	N	
14	None			0	0	0	0	0	0	0	0		N	N	
15	None			0	0	0	0	0	0	0	0		N	N	
16	None			0	0	0	0	0	0	0	0		N	N	
17	None			0	0	0	0	0	0	0	0		N	N	
18	None			0	0	0	0	0	0	0	0		N	N	
19	None			0	0	0	0	0	0	0	0		N	N	
20	None			0	0	0	0	0	0	0	0		N	N	
21	None			0	0	0	0	0	0	0	0		N	N	
22	None			0	0	0	0	0	0	0	0		N	N	
23	None			0	0	0	0	0	0	0	0		N	N	
24	None			0	0	0	0	0	0	0	0		N	N	
25	None			0	0	0	0	0	0	0	0		N	N	
26	None			0	0	0	0	0	0	0	0		N	N	
27	None			0	0	0	0	0	0	0	0		N	N	
28	None			0	0	0	0	0	0	0	0		N	N	
29	None			0	0	0	0	0	0	0	0		N	N	
30	None			0	0	0	0	0	0	0	0		N	N	
31	Coordination Plan	1-1	L	1	1	12	31	6	45	9	0	2 3 4 5 6	N	N	
32	None			0	0	0	0	0	0	0	0		N	N	
33	Coordination Plan	3-1	L	1	1	12	31	11	15	14	15	2 3 4 5 6	N	N	
34	Coordination Plan	4-1	L	1	1	12	31	14	15	18	30	2 3 4 5 6	N	N	
35	None			0	0	0	0	0	0	0	0		N	N	
36	None			0	0	0	0	0	0	0	0		N	N	
37	Coordination Plan	9-1	L	1	1	12	31	10	10	10	50	1	N	N	
38	Coordination Plan	9-1	L	1	1	12	31	12	10	12	50	1	N	N	
39	None			0	0	0	0	0	0	0	0		N	N	
40	None			0	0	0	0	0	0	0	0		N	N	
41	Coordination Plan	Free	M	1	1	1	1	0	0	24	0	2 3 4 5 6	N	N	
42	Coordination Plan	Free	M	11	22	11	29	17	30	21	15	5	N	N	
43	Coordination Plan	Free	M	12	25	12	25	10	0	12	15	1 2 3 4 5 6 7	N	N	
44	None			0	0	0	0	0	0	0	0		N	N	
45	None			0	0	0	0	0	0	0	0		N	N	
46	None			0	0	0	0	0	0	0	0		N	N	
47	None			0	0	0	0	0	0	0	0		N	N	
48	None			0	0	0	0	0	0	0	0		N	N	
49	None			0	0	0	0	0	0	0	0		N	N	
50	None			0	0	0	0	0	0	0	0		N	N	

DocuSign Envelope ID: 5C03745C-4B01-4834-A65D-B77F558A4F46

729 - 13-0729: NC 146/Long Shoals Road @ SR 3501/Clayton Road
9 - Coordination Plan 1
5/21/2021 1:53 PM

1

Cycle length (0-999 sec)	120
Min Transition Cycle (0-999 sec)	100
Max Transition Cycle (0-999 sec)	140

Offset # or Ring:	1	2	3	4
Offsets (0-999 sec)	114	0	0	0
Act Coord Phase Min Green (0-255)	0	0	0	0

Splits (0-255 sec)

Phase	1	2	3	4	5	6	7	8
Split	15	75	0	30	15	75	0	0
Phase	9	10	11	12	13	14	15	16
Split	0	0	0	0	0	0	0	0

Verify Plan Data

Phase/Function Settings:

	1	2	3	4	5	6	7	8	9	10	11	12	13	14	15	16
Coordinated Phase		2				6										
Float Force Offs																
Hold to Force Off																
Hi Priority Ped																
Dynamic/Backup																

Options:	**(Y/N)**	
Split/Timing in percent?	N	
*Permissive Mode (0-4)	0	*0 = Auto
Enable Transition Permissive Mode?	N	1 = Open
Adjust Non-Coordinated Splits?	Y	2 = Manual
Cycle Once per Cycle Length?	Y	3 = Window
		4 = Walk

Active Pages:	
Phase Sequence Page (1-12)	2
Phase Timing Page (1-4)	1
Phase Control Page (1-4)	1
OverLap Control Page (1-4)	1
Input Page (1-4)	1
Output Page (1-4)	1

Global Manual Permissive windows:

*Applies when "Window" permissive is selected

Manual Perm 1 End Point (0-255 sec)	0
Manual Perm 2 Start Point (0-255 sec)	0
Manual Perm 2 End Point (0-255 sec)	0

Manual Permissives by Phase:

*Applies when "Manual" permissive is selected

	Vehicle		Pedestrian	
(0-255 sec)	Start	Stop	Start	Stop
Phase 1	0	0	0	0
Phase 2	0	0	0	0
Phase 3	0	0	0	0
Phase 4	0	0	0	0
Phase 5	0	0	0	0
Phase 6	0	0	0	0
Phase 7	0	0	0	0
Phase 8	0	0	0	0
Phase 9	0	0	0	0
Phase 10	0	0	0	0
Phase 11	0	0	0	0
Phase 12	0	0	0	0
Phase 13	0	0	0	0
Phase 14	0	0	0	0
Phase 15	0	0	0	0
Phase 16	0	0	0	0

DocuSign Envelope ID: 5C03745C-4B01-4834-A65D-B77F558A4F46

729 - 13-0729: NC 146/Long Shoals Road @ SR 3501/Clayton Road
9 - Coordination Plan 3
5/21/2021 1:53 PM

Coordination Plan # 3

Cycle length (0-999 sec)	110
Min Transition Cycle (0-999 sec)	90
Max Transition Cycle (0-999 sec)	130

Offset # or Ring:	1	2	3	4
Offsets (0-999 sec)	62	0	0	0
Act Coord Phase Min Green (0-255)	0	0	0	0

Splits (0-255 sec)

Phase	1	2	3	4	5	6	7	8
Split	15	65	0	30	15	65	0	0
Phase	9	10	11	12	13	14	15	16
Split	0	0	0	0	0	0	0	0

Verify Plan Data

Phase/Function Settings:

	1	2	3	4	5	6	7	8	9	10	11	12	13	14	15	16
Coordinated Phase		2				6										
Float Force Offs																
Hold to Force Off																
Hi Priority Ped																
Dynamic/Backup																

Options:	**(Y/N)**	
Split/Timing in percent?	N	
*Permissive Mode (0-4)	0	*0 = Auto
Enable Transition Permissive Mode?	N	1 = Open
Adjust Non-Coordinated Splits?	Y	2 = Manual
Cycle Once per Cycle Length?	Y	3 = Window
		4 = Walk

Active Pages:	
Phase Sequence Page (1-12)	2
Phase Timing Page (1-4)	1
Phase Control Page (1-4)	1
OverLap Control Page (1-4)	1
Input Page (1-4)	1
Output Page (1-4)	1

Global Manual Permissive windows:

*Applies when "Window" permissive is selected

Manual Perm 1 End Point (0-255 sec)	0
Manual Perm 2 Start Point (0-255 sec)	0
Manual Perm 2 End Point (0-255 sec)	0

Manual Permissives by Phase:

*Applies when "Manual" permissive is selected

	Vehicle		Pedestrian	
(0-255 sec)	Start	Stop	Start	Stop
Phase 1	0	0	0	0
Phase 2	0	0	0	0
Phase 3	0	0	0	0
Phase 4	0	0	0	0
Phase 5	0	0	0	0
Phase 6	0	0	0	0
Phase 7	0	0	0	0
Phase 8	0	0	0	0
Phase 9	0	0	0	0
Phase 10	0	0	0	0
Phase 11	0	0	0	0
Phase 12	0	0	0	0
Phase 13	0	0	0	0
Phase 14	0	0	0	0
Phase 15	0	0	0	0
Phase 16	0	0	0	0

DocuSign Envelope ID: 5C03745C-4B01-4834-A65D-B77F558A4F46

729 - 13-0729: NC 146/Long Shoals Road @ SR 3501/Clayton Road
9 - Coordination Plan 4
5/21/2021 1:53 PM

Coordination Plan # 4

Cycle length (0-999 sec)	120
Min Transition Cycle (0-999 sec)	100
Max Transition Cycle (0-999 sec)	140

Offset # or Ring:	1	2	3	4
Offsets (0-999 sec)	114	0	0	0
Act Coord Phase Min Green (0-255)	0	0	0	0

Splits (0-255 sec)

Phase	1	2	3	4	5	6	7	8
Split	15	70	0	35	15	70	0	0
Phase	9	10	11	12	13	14	15	16
Split	0	0	0	0	0	0	0	0

Verify Plan Data

Phase/Function Settings:

	1	2	3	4	5	6	7	8	9	10	11	12	13	14	15	16
Coordinated Phase		2				6										
Float Force Offs																
Hold to Force Off																
Hi Priority Ped																
Dynamic/Backup																

Options:	**(Y/N)**	
Split/Timing in percent?	N	
*Permissive Mode (0-4)	0	*0 = Auto
Enable Transition Permissive Mode?	N	1 = Open
Adjust Non-Coordinated Splits?	Y	2 = Manual
Cycle Once per Cycle Length?	Y	3 = Window
		4 = Walk

Active Pages:	
Phase Sequence Page (1-12)	2
Phase Timing Page (1-4)	1
Phase Control Page (1-4)	1
OverLap Control Page (1-4)	1
Input Page (1-4)	1
Output Page (1-4)	1

Global Manual Permissive windows:

*Applies when "Window" permissive is selected

Manual Perm 1 End Point (0-255 sec)	0
Manual Perm 2 Start Point (0-255 sec)	0
Manual Perm 2 End Point (0-255 sec)	0

Manual Permissives by Phase:

*Applies when "Manual" permissive is selected

	Vehicle		Pedestrian	
(0-255 sec)	Start	Stop	Start	Stop
Phase 1	0	0	0	0
Phase 2	0	0	0	0
Phase 3	0	0	0	0
Phase 4	0	0	0	0
Phase 5	0	0	0	0
Phase 6	0	0	0	0
Phase 7	0	0	0	0
Phase 8	0	0	0	0
Phase 9	0	0	0	0
Phase 10	0	0	0	0
Phase 11	0	0	0	0
Phase 12	0	0	0	0
Phase 13	0	0	0	0
Phase 14	0	0	0	0
Phase 15	0	0	0	0
Phase 16	0	0	0	0

DocuSign Envelope ID: 5C03745C-4B01-4834-A65D-B77F558A4F46

729 - 13-0729: NC 146/Long Shoals Road @ SR 3501/Clayton Road
9 - Coordination Plan 9
5/21/2021 1:53 PM

Coordination Plan # 9

	125
Min Transition Cycle (0-999 sec)	90
Max Transition Cycle (0-999 sec)	160

Offset # or Ring:	1	2	3	4
Offsets (0-999 sec)	13	0	0	0
Act Coord Phase Min Green (0-255)	0	0	0	0

Splits (0-255 sec)

Phase	1	2	3	4	5	6	7	8
Split	15	30	0	80	15	30	0	0
Phase	9	10	11	12	13	14	15	16
Split	0	0	0	0	0	0	0	0

Verify Plan Data

Phase/Function Settings:

	1	2	3	4	5	6	7	8	9	10	11	12	13	14	15	16
Coordinated Phase		2				6										
Float Force Offs																
Hold to Force Off																
Hi Priority Ped																
Dynamic/Backup																

Options:	**(Y/N)**	
Split/Timing in percent?	N	
*Permissive Mode (0-4)	0	*0 = Auto
Enable Transition Permissive Mode?	N	1 = Open
Adjust Non-Coordinated Splits?	Y	2 = Manual
Cycle Once per Cycle Length?	Y	3 = Window
		4 = Walk

Active Pages:	
Phase Sequence Page (1-12)	2
Phase Timing Page (1-4)	2
Phase Control Page (1-4)	1
OverLap Control Page (1-4)	1
Input Page (1-4)	1
Output Page (1-4)	1

Global Manual Permissive windows:

*Applies when "Window" permissive is selected

Manual Perm 1 End Point (0-255 sec)	0
Manual Perm 2 Start Point (0-255 sec)	0
Manual Perm 2 End Point (0-255 sec)	0

Manual Permissives by Phase:

*Applies when "Manual" permissive is selected

	Vehicle		Pedestrian	
(0-255 sec)	Start	Stop	Start	Stop
Phase 1	0	0	0	0
Phase 2	0	0	0	0
Phase 3	0	0	0	0
Phase 4	0	0	0	0
Phase 5	0	0	0	0
Phase 6	0	0	0	0
Phase 7	0	0	0	0
Phase 8	0	0	0	0
Phase 9	0	0	0	0
Phase 10	0	0	0	0
Phase 11	0	0	0	0
Phase 12	0	0	0	0
Phase 13	0	0	0	0
Phase 14	0	0	0	0
Phase 15	0	0	0	0
Phase 16	0	0	0	0

DocuSign Envelope ID: 5C03745C-4B01-4834-A65D-B77F558A4F46

729 - 13-0729: NC 146/Long Shoals Road @ SR 3501/Clayton Road
3 - Phase Timing 1
5/21/2021 1:53 PM

Phase Timing Elements	Phase															
	1	2	3	4	5	6	7	8	9	10	11	12	13	14	15	16
Minimum Green 1	7	10	0	7	7	10	0	0	0	0	0	0	0	0	0	0
Minimum Green 2	0	0	0	0	0	0	0	0	0	0	0	0	0	0	0	0
Re-service Green	0	0	0	0	0	0	0	0	0	0	0	0	0	0	0	0
Extension 1 (Gap 1)	2.0	3.0	0.0	3.0	2.0	3.0	0.0	0.0	0.0	0.0	0.0	0.0	0.0	0.0	0.0	0.0
Extension 2 (Gap 2)	0.0	0.0	0.0	0.0	0.0	0.0	0.0	0.0	0.0	0.0	0.0	0.0	0.0	0.0	0.0	0.0
Maximum Green 1	15	60	0	70	15	60	0	0	0	0	0	0	0	0	0	0
Maximum Green 2	0	0	0	0	0	0	0	0	0	0	0	0	0	0	0	0
Yellow Clearance	3.0	4.6	4.0	3.3	3.3	4.6	4.0	4.0	4.0	4.0	4.0	4.0	4.0	4.0	4.0	4.0
Red Clearance	3.3	2.7	2.0	3.5	3.4	2.7	2.0	2.0	2.0	2.0	2.0	2.0	2.0	2.0	2.0	2.0
Red Revert	2.0	2.0	2.0	2.0	2.0	2.0	2.0	2.0	2.0	2.0	2.0	2.0	2.0	2.0	2.0	2.0
Walk 1	0	0	0	0	0	0	0	0	0	0	0	0	0	0	0	0
Walk 2	0	0	0	0	0	0	0	0	0	0	0	0	0	0	0	0
Dont Walk 1	0	0	0	0	0	0	0	0	0	0	0	0	0	0	0	0
Dont Walk 2	0	0	0	0	0	0	0	0	0	0	0	0	0	0	0	0
Walk Advance Time	0.0	0.0	0.0	0.0	0.0	0.0	0.0	0.0	0.0	0.0	0.0	0.0	0.0	0.0	0.0	0.0
Walk Delay Time	0.0	0.0	0.0	0.0	0.0	0.0	0.0	0.0	0.0	0.0	0.0	0.0	0.0	0.0	0.0	0.0
Alternate Walk	0	0	0	0	0	0	0	0	0	0	0	0	0	0	0	0
Alternate Dont Walk	0	0	0	0	0	0	0	0	0	0	0	0	0	0	0	0
Alternate Min Green	0	0	0	0	0	0	0	0	0	0	0	0	0	0	0	0
Dynamic Max / Max 3	0	0	0	0	0	0	0	0	0	0	0	0	0	0	0	0
Dynamic Max Adjust	0.0	0.0	0.0	0.0	0.0	0.0	0.0	0.0	0.0	0.0	0.0	0.0	0.0	0.0	0.0	0.0
Seconds / Actuation	0.0	0.0	0.0	0.0	0.0	0.0	0.0	0.0	0.0	0.0	0.0	0.0	0.0	0.0	0.0	0.0
Max Variable Initial	0	0	0	0	0	0	0	0	0	0	0	0	0	0	0	0
Time Before Reduction	0	0	0	0	0	0	0	0	0	0	0	0	0	0	0	0
Time To Reduce	0	0	0	0	0	0	0	0	0	0	0	0	0	0	0	0
Minimum Gap	0.0	0.0	0.0	0.0	0.0	0.0	0.0	0.0	0.0	0.0	0.0	0.0	0.0	0.0	0.0	0.0
Alt Flash Frequency (0-25.5 Hz)	1.0															

DocuSign Envelope ID: 5C03745C-4B01-4834-A65D-B77F558A4F46

729 - 13-0729: NC 146/Long Shoals Road @ SR 3501/Clayton Road
4 - Phase Sequence Page 1
5/21/2021 1:53 PM

Rings	Barrier 1				Barrier 2				Barrier 3				Barrier 4			
1	1	2	0	0	0	4	0	0	0	0	0	0	0	0	0	0
2	5	6	0	0	0	0	0	0	0	0	0	0	0	0	0	0
3	0	0	0	0	0	0	0	0	0	0	0	0	0	0	0	0
4	0	0	0	0	0	0	0	0	0	0	0	0	0	0	0	0

Rings	Barrier 5				Barrier 6				Barrier 7				Barrier 8			
1	0	0	0	0	0	0	0	0	0	0	0	0	0	0	0	0
2	0	0	0	0	0	0	0	0	0	0	0	0	0	0	0	0
3	0	0	0	0	0	0	0	0	0	0	0	0	0	0	0	0
4	0	0	0	0	0	0	0	0	0	0	0	0	0	0	0	0

Phase Directions

1		5		9		13	
2		6		10		14	
3		7		11		15	
4		8		12		16	

DocuSign Envelope ID: 5C03745C-4B01-4834-A65D-B77F558A4F46

729 - 13-0729: NC 146/Long Shoals Road @ SR 3501/Clayton Road
4 - Phase Sequence Page 2
5/21/2021 1:53 PM

Rings	Barrier 1				Barrier 2				Barrier 3				Barrier 4			
1	0	2	1	0	0	4	0	0	0	0	0	0	0	0	0	0
2	5	6	0	0	0	0	0	0	0	0	0	0	0	0	0	0
3	0	0	0	0	0	0	0	0	0	0	0	0	0	0	0	0
4	0	0	0	0	0	0	0	0	0	0	0	0	0	0	0	0

Rings	Barrier 5				Barrier 6				Barrier 7				Barrier 8			
1	0	0	0	0	0	0	0	0	0	0	0	0	0	0	0	0
2	0	0	0	0	0	0	0	0	0	0	0	0	0	0	0	0
3	0	0	0	0	0	0	0	0	0	0	0	0	0	0	0	0
4	0	0	0	0	0	0	0	0	0	0	0	0	0	0	0	0

Phase Directions

1		5		9		13	
2		6		10		14	
3		7		11		15	
4		8		12		16	

DocuSign Envelope ID: 5C03745C-4B01-4834-A65D-B77F558A4F46

729 - 13-0729: NC 146/Long Shoals Road @ SR 3501/Clayton Road
2-1 Phase Control Functions Page 1
5/21/2021 1:53 PM

	1 2 3 4 5 6 7 8 9 10 11 12 13 14 15 16
Time Min 2	
Time Extension 2	
Time Max 2	
Soft Recall	
Minimum Recall	2 6
Maximum Recall 1	
Maximum Recall 2	
Call Non-Act 1	
Call Non-Act 2	
Omit Phase	
Dual Entry	
No Skip	
Added Extension	
Simultaneous Gap	1 2 3 4 5 6 7 8
Guaranteed Passage	
Green Interval Flash	
Fast Green Flash	
Red Rest	
Backup Protection	
Inhibit Reservice	
Inhibit Max (Coord)	1 2 3 4 5 6 7 8 9 10 11 12 13 14 15 16
Inhibit Coordination	
Dynamic Max/Max3	
Variable Initial	
Gap Reduction	
Omit Pedestrian	
Time Walk 2	
Time FDWalk 2	

	1 2 3 4 5 6 7 8 9 10 11 12 13 14 15 16
Ped Soft Recall	
Ped Recall	
Rest In Walk	
Modified Rest In Walk	
Ped Reservice	
Flashing Walk	
Advanced Walk	
Delayed Walk	
Ped Yellow Clear	
Ped Red Clear	
Startup In Green	2 6
Startup In Yellow	
Startup Red Clear	
First Phases	
Startup Calls	
Startup Ped Calls	
Flash Entry	2 6
Yellow Flash	2 6
Wag Phases	1 3 6 8
Wag Overlaps	1
Manual Control	1 2 3 4 5 6 7 8
Manual Control Omit Ped	
Red Detector Lock	
Yellow Detector Lock	2 6
Active Logic 1 - 16	1 2 3 4 5 6
Active Logic 17 - 32	
Dynamic/Backup	

DocuSign Envelope ID: 5C03745C-4B01-4834-A65D-B77F558A4F46

729 - 13-0729: NC 146/Long Shoals Road @ SR 3501/Clayton Road
3 - Phase Timing 2
5/21/2021 1:53 PM

Phase Timing Elements	Phase															
	1	2	3	4	5	6	7	8	9	10	11	12	13	14	15	16
Minimum Green 1	7	10	0	7	7	10	0	0	0	0	0	0	0	0	0	0
Minimum Green 2	0	0	0	0	0	0	0	0	0	0	0	0	0	0	0	0
Re-service Green	0	0	0	0	0	0	0	0	0	0	0	0	0	0	0	0
Extension 1 (Gap 1)	2.0	3.0	0.0	10.0	2.0	3.0	0.0	0.0	0.0	0.0	0.0	0.0	0.0	0.0	0.0	0.0
Extension 2 (Gap 2)	0.0	0.0	0.0	0.0	0.0	0.0	0.0	0.0	0.0	0.0	0.0	0.0	0.0	0.0	0.0	0.0
Maximum Green 1	15	50	0	70	25	50	0	0	0	0	0	0	0	0	0	0
Maximum Green 2	0	0	0	0	0	0	0	0	0	0	0	0	0	0	0	0
Yellow Clearance	3.0	4.6	4.0	3.3	3.3	4.6	4.0	4.0	4.0	4.0	4.0	4.0	4.0	4.0	4.0	4.0
Red Clearance	3.3	2.7	2.0	3.5	3.4	2.7	2.0	2.0	2.0	2.0	2.0	2.0	2.0	2.0	2.0	2.0
Red Revert	2.0	2.0	2.0	2.0	2.0	2.0	2.0	2.0	2.0	2.0	2.0	2.0	2.0	2.0	2.0	2.0
Walk 1	0	0	0	0	0	0	0	0	0	0	0	0	0	0	0	0
Walk 2	0	0	0	0	0	0	0	0	0	0	0	0	0	0	0	0
Dont Walk 1	0	0	0	0	0	0	0	0	0	0	0	0	0	0	0	0
Dont Walk 2	0	0	0	0	0	0	0	0	0	0	0	0	0	0	0	0
Walk Advance Time	0.0	0.0	0.0	0.0	0.0	0.0	0.0	0.0	0.0	0.0	0.0	0.0	0.0	0.0	0.0	0.0
Walk Delay Time	0.0	0.0	0.0	0.0	0.0	0.0	0.0	0.0	0.0	0.0	0.0	0.0	0.0	0.0	0.0	0.0
Alternate Walk	0	0	0	0	0	0	0	0	0	0	0	0	0	0	0	0
Alternate Dont Walk	0	0	0	0	0	0	0	0	0	0	0	0	0	0	0	0
Alternate Min Green	0	0	0	0	0	0	0	0	0	0	0	0	0	0	0	0
Dynamic Max / Max 3	0	0	0	0	0	0	0	0	0	0	0	0	0	0	0	0
Dynamic Max Adjust	0.0	0.0	0.0	0.0	0.0	0.0	0.0	0.0	0.0	0.0	0.0	0.0	0.0	0.0	0.0	0.0
Seconds / Actuation	0.0	0.0	0.0	0.0	0.0	0.0	0.0	0.0	0.0	0.0	0.0	0.0	0.0	0.0	0.0	0.0
Max Variable Initial	0	0	0	0	0	0	0	0	0	0	0	0	0	0	0	0
Time Before Reduction	0	0	0	0	0	0	0	0	0	0	0	0	0	0	0	0
Time To Reduce	0	0	0	0	0	0	0	0	0	0	0	0	0	0	0	0
Minimum Gap	0.0	0.0	0.0	0.0	0.0	0.0	0.0	0.0	0.0	0.0	0.0	0.0	0.0	0.0	0.0	0.0
Alt Flash Frequency (0-25.5 Hz)	1.0															

DocuSign Envelope ID: 5C03745C-4B01-4834-A65D-B77F558A4F46

PROJECT REFERENCE NO.	SHEET NO.
I-4700	Sig. 2.0

PHASING DIAGRAM

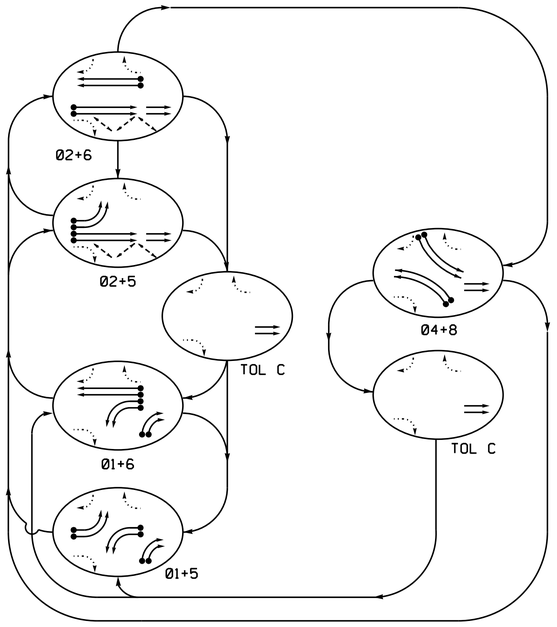

PHASING DIAGRAM DETECTION LEGEND

- DETECTED MOVEMENT
- UNDETECTED MOVEMENT (OVERLAP)
- UNSIGNALIZED MOVEMENT
- PEDESTRIAN MOVEMENT

TABLE OF OPERATION

SIGNAL FACE	PHASE 01+5	01+6	02+5	02+6	04+8	TOLC	FLASH
11,12	\	/	~~R~~	~~R~~	~~R~~	~~R~~	~~R~~
13,14	/	/	R	R	R	R	R
21,22	R	R	G	G	R	R	Y
23,24	R	R	G	G	G	G	Y
41,42,43,44,45	~~R~~	~~R~~	~~R~~	~~R~~	-	~~R~~	~~R~~
51,52	\	~~R~~	\	~~R~~	~~R~~	~~R~~	~~R~~
61,62	R	G	R	G	R	R	Y
81,82,83,84,85	~~R~~	~~R~~	~~R~~	~~R~~	-	~~R~~	~~R~~
P21,P22 P23,P24 P25,P26	DW	DW	W	W	DW	DW	DRK

SIGNAL FACE I.D.

All Heads L.E.D.

Denotes Louvers

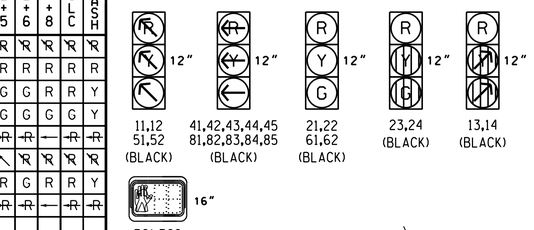

OASIS 2070 LOOP & DETECTOR INSTALLATION CHART

INDUCTIVE LOOPS					DETECTOR PROGRAMMING						
LOOP	SIZE (FT)	DISTANCE FROM STOPBAR (FT)	TURNS	NEW LOOP	PHASE	CALLING	EXTENSION	FULL TIME DELAY	STRETCH TIME	DELAY TIME	SYSTEM LOOP	NEW CARD
1A	6X40	0	2-4-2	-	1	Y	Y	-	-	-	-	-
1B	6X40	0	2-4-2	-	1	Y	Y	-	-	-	-	-
1C	6X40	0	2-4-2	Y	1	Y	Y	-	-	15	-	Y
1D	6X40	0	2-4-2	Y	1	Y	Y	-	-	15	-	Y
2A	✱	300	✱	-	2	Y	Y	-	-	-	-	-
4A	6X40	0	2-4-2	-	4	Y	Y	-	-	-	-	-
4B	6X40	0	2-4-2	-	4	Y	Y	-	-	-	-	-
5A	6X40	0	2-4-2	-	5	Y	Y	-	-	-	-	-
5B	6X40	0	2-4-2	-	5	Y	Y	-	-	-	-	-
6A	6X6	300	6	-	6	Y	Y	-	-	-	-	-
6B	6X6	300	6	-	6	Y	Y	-	-	-	-	-
8A	6X40	0	2-4-2	Y	8	Y	Y	-	-	-	-	-
8B	6X40	0	2-4-2	Y	8	Y	Y	-	-	-	-	-
S1	6X6	+420	4	-	-	-	-	-	-	-	Y	-
S2	6X6	+420	4	-	-	-	-	-	-	-	Y	-
S3	6X6	+340	5	-	-	-	-	-	-	-	Y	-
S4	6X6	+340	5	-	-	-	-	-	-	-	Y	-
S5	6X6	715	6	Y	-	-	-	-	-	-	Y	-
S6	6X6	715	6	Y	-	-	-	-	-	-	Y	-

✱ Microwave Detection Zone

5 Phase
Fully Actuated
Asheville Signal System

NOTES

1. Refer to "Roadway Standard Drawings NCDOT" dated January 2018 and "Standard Specifications for Roads and Structures" dated January 2018.
2. Do not program signal for latenight flashing operation unless otherwise directed by the Engineer.
3. Phase 1 and/or 5 may be lagged.
4. Set all detector units to presence mode.
5. Omit "WALK" and flashing "DON'T WALK" with no pedestrian calls.
6. Program pedestrian heads to countdown the flashing "DON'T WALK" time only.
7. Maximum times shown in timing chart are for free-run operation only. Coordinated signal system timing values supersede these values.

LEGEND

PROPOSED		EXISTING
○→	Traffic Signal Head	●→
◐→	Modified Signal Head	N/A
⊣	Sign	⊣
□↓	Pedestrian Signal Head With Push Button & Sign	■↓
○	Signal Pole with Guy	●—
○	Signal Pole with Sidewalk Guy	●—
▭	Inductive Loop Detector	▭
⊠	Controller & Cabinet	⊠
□	Junction Box	■
·····	2-in Underground Conduit	·-·-·
N/A	Right of Way	———
→	Directional Arrow	→
DD	Directional Drill	N/A
⬭	Metal Pole with Mastarm	⬭
⬡	Type II Signal Pedestal	●
⍋	Wheelchair Ramp	⍋
⬭	Microwave Detection Zone	⬭
⊂	Out of Pavement Detection	⊂●

SIGNS

PROPOSED		EXISTING
Ⓐ	"YIELD" Sign (R1-2)	Ⓐ
Ⓑ	"TO I-26" Directional Sign	Ⓑ
Ⓒ	No Left Turn Sign (R3-2)	Ⓒ

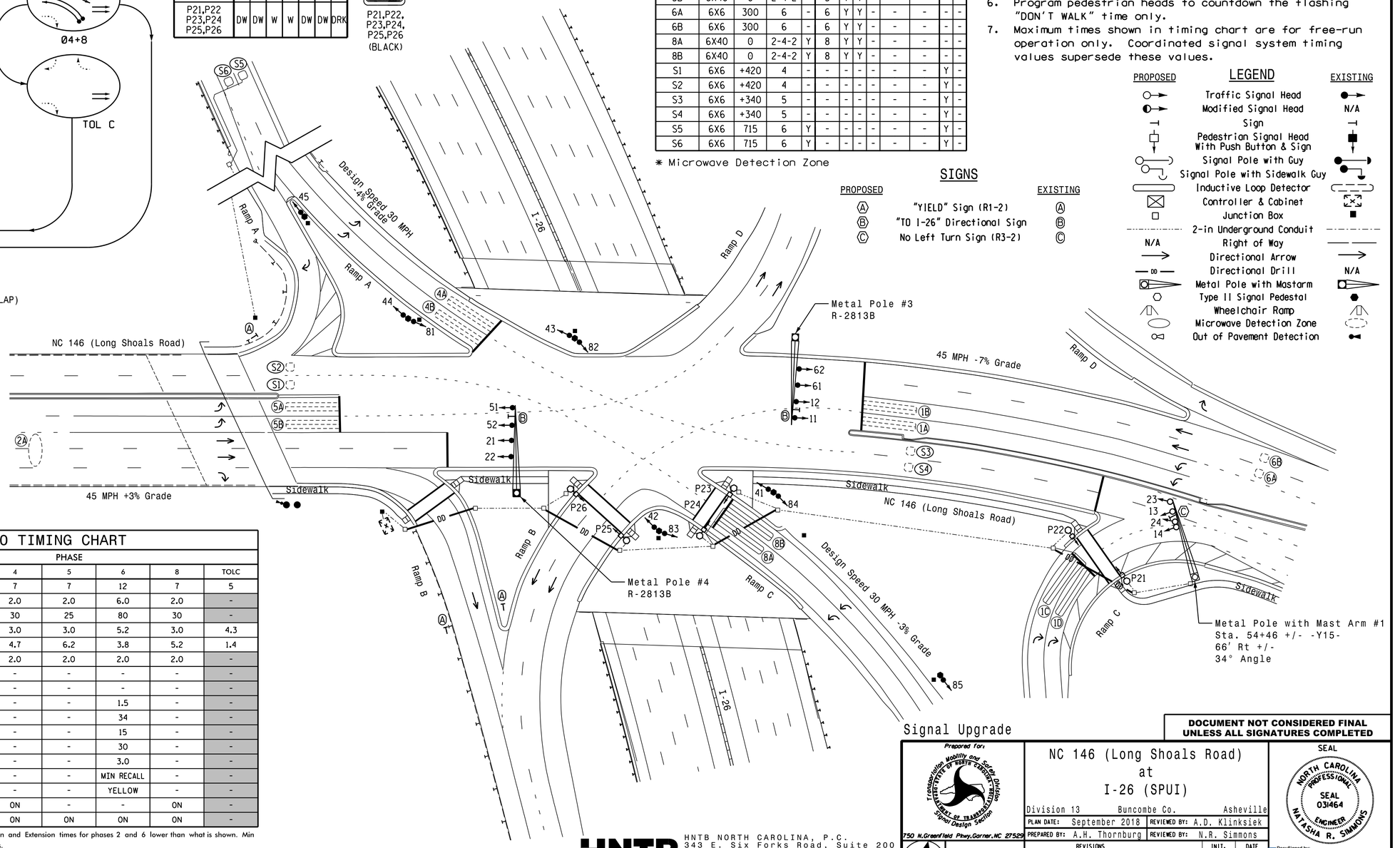

OASIS 2070 TIMING CHART

FEATURE	PHASE 1	2	4	5	6	8	TOLC
Min Green 1 *	7	12	7	7	12	7	5
Extension 1 *	2.0	6.0	2.0	2.0	6.0	2.0	-
Max Green 1 *	25	80	30	25	80	30	-
Yellow Clearance	3.2	4.3	3.0	3.0	5.2	3.0	4.3
Red Clearance	5.1	3.0	4.7	6.2	3.8	5.2	1.4
Red Revert	2.0	2.0	2.0	2.0	2.0	2.0	-
Walk 1 *	-	7	-	-	-	-	-
Don't Walk 1	-	10	-	-	-	-	-
Seconds Per Actuation *	-	1.5	-	-	1.5	-	-
Max Variable Initial *	-	34	-	-	34	-	-
Time Before Reduction *	-	15	-	-	15	-	-
Time To Reduce *	-	30	-	-	30	-	-
Minimum Gap	-	3.0	-	-	3.0	-	-
Recall Mode	-	MIN RECALL	-	-	MIN RECALL	-	-
Vehicle Call Memory	-	YELLOW	-	-	YELLOW	-	-
Dual Entry	-	-	ON	-	-	ON	-
Simultaneous Gap	ON	ON	ON	ON	ON	ON	-

* These values may be field adjusted. Do not adjust Min Green and Extension times for phases 2 and 6 lower than what is shown. Min Green for all other phases should not be lower than 4 seconds.

Signal Upgrade

DOCUMENT NOT CONSIDERED FINAL UNLESS ALL SIGNATURES COMPLETED

HNTB NORTH CAROLINA, P.C.
343 E. Six Forks Road, Suite 200
Raleigh, North Carolina 27609
NC License No: C-1554
(919) 546-8997

Prepared for: Transportation Mobility and Safety Division, North Carolina Department of Transportation, Signal Design Section
750 N.Greenfield Pkwy.Garner,NC 27529

NC 146 (Long Shoals Road)
at
I-26 (SPUI)

Division 13 Buncombe Co. Asheville

PLAN DATE: September 2018 REVIEWED BY: A.D. Klinksiek

PREPARED BY: A.H. Thornburg REVIEWED BY: N.R. Simmons

REVISIONS	INIT.	DATE

0 40
1"=40'

SEAL
NORTH CAROLINA PROFESSIONAL SEAL 031464 ENGINEER NATASHA R. SIMMONS

DocuSigned by: Natasha R Simmons 4/26/2019
SIGNATURE DATE

SIG. INVENTORY NO. 13-1216

DocuSign Envelope ID: 5C03745C-4B01-4834-A65D-B77F558A4F46

1216 - 13-1216: NC 146/Long Shoals Road @ I-26 Ramps
B - Scheduling Events 1-100
5/21/2021 1:29 PM

Event #	Event Type	Event Details	Pri LMH	Start Date MM	Start Date DD	Stop Date MM	Stop Date DD	Start Time HH	Start Time MM	Stop Time HH	Stop Time MM	DOW Enabled 1 2 3 4 5 6 7	Del When Done	Cont	Event Groups Assigned 1 2 3 4 5 6 7 8 9 10 11 12 13 14 15 16
1	None			0	0	0	0	0	0	0	0		N	N	
2	None			0	0	0	0	0	0	0	0		N	N	
3	None			0	0	0	0	0	0	0	0		N	N	
4	None			0	0	0	0	0	0	0	0		N	N	
5	None			0	0	0	0	0	0	0	0		N	N	
6	None			0	0	0	0	0	0	0	0		N	N	
7	None			0	0	0	0	0	0	0	0		N	N	
8	None			0	0	0	0	0	0	0	0		N	N	
9	None			0	0	0	0	0	0	0	0		N	N	
10	None			0	0	0	0	0	0	0	0		N	N	
11	Coordination Plan	1-1	L	1	1	12	31	6	45	9	0	2 3 4 5 6	N	N	
12	Coordination Plan	2-1	L	1	1	12	31	9	0	11	15	2 3 4 5 6	N	N	
13	Coordination Plan	3-1	L	1	1	12	31	11	15	14	15	2 3 4 5 6	N	N	
14	Coordination Plan	4-1	L	1	1	12	31	14	15	18	30	2 3 4 5 6	N	N	
15	Coordination Plan	3-1	L	1	1	12	31	18	30	19	45	2 3 4 5 6	N	N	
16	Coordination Plan	3-1	L	1	1	12	31	10	0	19	0	7	N	N	
17	Coordination Plan	9-1	L	1	1	12	31	10	10	10	50	1	N	N	
18	Coordination Plan	9-1	L	1	1	12	31	12	10	12	50	1	N	N	
19	Coordination Plan	3-1	L	1	1	12	31	12	50	19	0	1	N	N	
20	None			0	0	0	0	0	0	0	0		N	N	
21	None			0	0	0	0	0	0	0	0		N	N	
22	None			0	0	0	0	0	0	0	0		N	N	
23	None			0	0	0	0	0	0	0	0		N	N	
24	None			0	0	0	0	0	0	0	0		N	N	
25	None			0	0	0	0	0	0	0	0		N	N	
26	None			0	0	0	0	0	0	0	0		N	N	
27	None			0	0	0	0	0	0	0	0		N	N	
28	None			0	0	0	0	0	0	0	0		N	N	
29	None			0	0	0	0	0	0	0	0		N	N	
30	None			0	0	0	0	0	0	0	0		N	N	
31	None			0	0	0	0	0	0	0	0		N	N	
32	None			0	0	0	0	0	0	0	0		N	N	
33	None			0	0	0	0	0	0	0	0		N	N	
34	None			0	0	0	0	0	0	0	0		N	N	
35	None			0	0	0	0	0	0	0	0		N	N	
36	None			0	0	0	0	0	0	0	0		N	N	
37	None			0	0	0	0	0	0	0	0		N	N	
38	None			0	0	0	0	0	0	0	0		N	N	
39	None			0	0	0	0	0	0	0	0		N	N	
40	None			0	0	0	0	0	0	0	0		N	N	
41	Coordination Plan	Free	M	1	1	1	1	0	0	24	0	2 3 4 5 6	N	N	
42	Coordination Plan	Free	M	11	22	11	29	17	30	21	15	5	N	N	
43	Coordination Plan	Free	M	12	25	12	25	10	0	12	15	1 2 3 4 5 6 7	N	N	
44	None			0	0	0	0	0	0	0	0		N	N	
45	None			0	0	0	0	0	0	0	0		N	N	
46	None			0	0	0	0	0	0	0	0		N	N	
47	None			0	0	0	0	0	0	0	0		N	N	
48	None			0	0	0	0	0	0	0	0		N	N	
49	None			0	0	0	0	0	0	0	0		N	N	
50	None			0	0	0	0	0	0	0	0		N	N	

DocuSign Envelope ID: 5C03745C-4B01-4834-A65D-B77F558A4F46

1216 - 13-1216: NC 146/Long Shoals Road @ I-26 Ramps
9 - Coordination Plan 1
5/21/2021 1:29 PM

Coordination Plan # 1

Cycle length (0-999 sec)	120
Min Transition Cycle (0-999 sec)	100
Max Transition Cycle (0-999 sec)	140

Offset # or Ring:	1	2	3	4
Offsets (0-999 sec)	0	0	0	0
Act Coord Phase Min Green (0-255)	0	0	0	0

Splits (0-255 sec)

Phase	1	2	3	4	5	6	7	8
Split	24	48	0	48	24	48	0	48
Phase	9	10	11	12	13	14	15	16
Split	0	0	0	0	0	0	0	0

Verify Plan Data

Phase/Function Settings:

	1	2	3	4	5	6	7	8	9	10	11	12	13	14	15	16
Coordinated Phase		2				6										
Float Force Offs																
Hold to Force Off																
Hi Priority Ped																
Dynamic/Backup																

Options:	**(Y/N)**	
Split/Timing in percent?	N	
*Permissive Mode (0-4)	0	*0 = Auto
Enable Transition Permissive Mode?	N	1 = Open
Adjust Non-Coordinated Splits?	Y	2 = Manual
Cycle Once per Cycle Length?	Y	3 = Window
		4 = Walk

Active Pages:	
Phase Sequence Page (1-12)	3
Phase Timing Page (1-4)	1
Phase Control Page (1-4)	1
OverLap Control Page (1-4)	1
Input Page (1-4)	1
Output Page (1-4)	1

Global Manual Permissive windows:

*Applies when "Window" permissive is selected

Manual Perm 1 End Point (0-255 sec)	0
Manual Perm 2 Start Point (0-255 sec)	0
Manual Perm 2 End Point (0-255 sec)	0

Manual Permissives by Phase:

*Applies when "Manual" permissive is selected

	Vehicle		Pedestrian	
(0-255 sec)	Start	Stop	Start	Stop
Phase 1	0	0	0	0
Phase 2	0	0	0	0
Phase 3	0	0	0	0
Phase 4	0	0	0	0
Phase 5	0	0	0	0
Phase 6	0	0	0	0
Phase 7	0	0	0	0
Phase 8	0	0	0	0
Phase 9	0	0	0	0
Phase 10	0	0	0	0
Phase 11	0	0	0	0
Phase 12	0	0	0	0
Phase 13	0	0	0	0
Phase 14	0	0	0	0
Phase 15	0	0	0	0
Phase 16	0	0	0	0

DocuSign Envelope ID: 5C03745C-4B01-4834-A65D-B77F558A4F46

1216 - 13-1216: NC 146/Long Shoals Road @ I-26 Ramps
9 - Coordination Plan 2
5/21/2021 1:29 PM

Coordination Plan # 2

Cycle length (0-999 sec)	100
Min Transition Cycle (0-999 sec)	80
Max Transition Cycle (0-999 sec)	120

Offset # or Ring:	1	2	3	4
Offsets (0-999 sec)	29	0	0	0
Act Coord Phase Min Green (0-255)	0	0	0	0

Splits (0-255 sec)

Phase	1	2	3	4	5	6	7	8
Split	24	44	0	32	20	48	0	32
Phase	9	10	11	12	13	14	15	16
Split	0	0	0	0	0	0	0	0

Verify Plan Data

Phase/Function Settings:

	1	2	3	4	5	6	7	8	9	10	11	12	13	14	15	16
Coordinated Phase		2				6										
Float Force Offs																
Hold to Force Off																
Hi Priority Ped																
Dynamic/Backup																

Options:	**(Y/N)**	
Split/Timing in percent?	N	
*Permissive Mode (0-4)	0	*0 = Auto
Enable Transition Permissive Mode?	N	1 = Open
Adjust Non-Coordinated Splits?	Y	2 = Manual
Cycle Once per Cycle Length?	Y	3 = Window
		4 = Walk

Active Pages:

Phase Sequence Page (1-12)	2
Phase Timing Page (1-4)	1
Phase Control Page (1-4)	1
OverLap Control Page (1-4)	1
Input Page (1-4)	1
Output Page (1-4)	1

Global Manual Permissive windows:

*Applies when "Window" permissive is selected

Manual Perm 1 End Point (0-255 sec)	0
Manual Perm 2 Start Point (0-255 sec)	0
Manual Perm 2 End Point (0-255 sec)	0

Manual Permissives by Phase:

*Applies when "Manual" permissive is selected

	Vehicle		Pedestrian	
(0-255 sec)	Start	Stop	Start	Stop
Phase 1	0	0	0	0
Phase 2	0	0	0	0
Phase 3	0	0	0	0
Phase 4	0	0	0	0
Phase 5	0	0	0	0
Phase 6	0	0	0	0
Phase 7	0	0	0	0
Phase 8	0	0	0	0
Phase 9	0	0	0	0
Phase 10	0	0	0	0
Phase 11	0	0	0	0
Phase 12	0	0	0	0
Phase 13	0	0	0	0
Phase 14	0	0	0	0
Phase 15	0	0	0	0
Phase 16	0	0	0	0

DocuSign Envelope ID: 5C03745C-4B01-4834-A65D-B77F558A4F46

1216 - 13-1216: NC 146/Long Shoals Road @ I-26 Ramps
9 - Coordination Plan 3
5/21/2021 1:29 PM

Coordination Plan # 3

Cycle length (0-999 sec)	110
Min Transition Cycle (0-999 sec)	90
Max Transition Cycle (0-999 sec)	130

Offset # or Ring:	1	2	3	4
Offsets (0-999 sec)	0	0	0	0
Act Coord Phase Min Green (0-255)	0	0	0	0

Splits (0-255 sec)

Phase	1	2	3	4	5	6	7	8
Split	26	44	0	40	20	50	0	40
Phase	9	10	11	12	13	14	15	16
Split	0	0	0	0	0	0	0	0

Verify Plan Data

Phase/Function Settings:

	1	2	3	4	5	6	7	8	9	10	11	12	13	14	15	16
Coordinated Phase		2				6										
Float Force Offs																
Hold to Force Off																
Hi Priority Ped																
Dynamic/Backup																

Options:	**(Y/N)**	
Split/Timing in percent?	N	
*Permissive Mode (0-4)	0	*0 = Auto
Enable Transition Permissive Mode?	N	1 = Open
Adjust Non-Coordinated Splits?	Y	2 = Manual
Cycle Once per Cycle Length?	Y	3 = Window
		4 = Walk

Active Pages:	
Phase Sequence Page (1-12)	2
Phase Timing Page (1-4)	1
Phase Control Page (1-4)	1
OverLap Control Page (1-4)	1
Input Page (1-4)	1
Output Page (1-4)	1

Global Manual Permissive windows:

*Applies when "Window" permissive is selected

Manual Perm 1 End Point (0-255 sec)	0
Manual Perm 2 Start Point (0-255 sec)	0
Manual Perm 2 End Point (0-255 sec)	0

Manual Permissives by Phase:

*Applies when "Manual" permissive is selected

	Vehicle		Pedestrian	
(0-255 sec)	Start	Stop	Start	Stop
Phase 1	0	0	0	0
Phase 2	0	0	0	0
Phase 3	0	0	0	0
Phase 4	0	0	0	0
Phase 5	0	0	0	0
Phase 6	0	0	0	0
Phase 7	0	0	0	0
Phase 8	0	0	0	0
Phase 9	0	0	0	0
Phase 10	0	0	0	0
Phase 11	0	0	0	0
Phase 12	0	0	0	0
Phase 13	0	0	0	0
Phase 14	0	0	0	0
Phase 15	0	0	0	0
Phase 16	0	0	0	0

DocuSign Envelope ID: 5C03745C-4B01-4834-A65D-B77F558A4F46

1216 - 13-1216: NC 146/Long Shoals Road @ I-26 Ramps
9 - Coordination Plan 4
5/21/2021 1:29 PM

Coordination Plan # 4

Cycle length (0-999 sec)	120
Min Transition Cycle (0-999 sec)	100
Max Transition Cycle (0-999 sec)	140

Offset # or Ring:	1	2	3	4
Offsets (0-999 sec)	0	0	0	0
Act Coord Phase Min Green (0-255)	0	0	0	0

Splits (0-255 sec)

Phase	1	2	3	4	5	6	7	8
Split	30	48	0	42	22	56	0	42
Phase	9	10	11	12	13	14	15	16
Split	0	0	0	0	0	0	0	0

Verify Plan Data

Phase/Function Settings:

Coordinated Phase	2 6
Float Force Offs	
Hold to Force Off	
Hi Priority Ped	
Dynamic/Backup	

Options:	**(Y/N)**	
Split/Timing in percent?	N	
*Permissive Mode (0-4)	0	*0 = Auto
Enable Transition Permissive Mode?	N	1 = Open
Adjust Non-Coordinated Splits?	Y	2 = Manual
Cycle Once per Cycle Length?	Y	3 = Window
		4 = Walk

Active Pages:	
Phase Sequence Page (1-12)	3
Phase Timing Page (1-4)	1
Phase Control Page (1-4)	1
OverLap Control Page (1-4)	1
Input Page (1-4)	1
Output Page (1-4)	1

Global Manual Permissive windows:

*Applies when "Window" permissive is selected

Manual Perm 1 End Point (0-255 sec)	0
Manual Perm 2 Start Point (0-255 sec)	0
Manual Perm 2 End Point (0-255 sec)	0

Manual Permissives by Phase:

*Applies when "Manual" permissive is selected

	Vehicle		Pedestrian	
(0-255 sec)	Start	Stop	Start	Stop
Phase 1	0	0	0	0
Phase 2	0	0	0	0
Phase 3	0	0	0	0
Phase 4	0	0	0	0
Phase 5	0	0	0	0
Phase 6	0	0	0	0
Phase 7	0	0	0	0
Phase 8	0	0	0	0
Phase 9	0	0	0	0
Phase 10	0	0	0	0
Phase 11	0	0	0	0
Phase 12	0	0	0	0
Phase 13	0	0	0	0
Phase 14	0	0	0	0
Phase 15	0	0	0	0
Phase 16	0	0	0	0

DocuSign Envelope ID: 5C03745C-4B01-4834-A65D-B77F558A4F46

1216 - 13-1216: NC 146/Long Shoals Road @ I-26 Ramps
9 - Coordination Plan 9
5/21/2021 1:29 PM

Coordination Plan # 9

Cycle length (0-999 sec)	125
Min Transition Cycle (0-999 sec)	80
Max Transition Cycle (0-999 sec)	160

Offset # or Ring:	1	2	3	4
Offsets (0-999 sec)	105	0	0	0
Act Coord Phase Min Green (0-255)	0	0	0	0

Splits (0-255 sec)

Phase	1	2	3	4	5	6	7	8
Split	22	73	0	30	25	70	0	30
Phase	9	10	11	12	13	14	15	16
Split	0	0	0	0	0	0	0	0

Verify Plan Data

Phase/Function Settings:

	1	2	3	4	5	6	7	8	9	10	11	12	13	14	15	16
Coordinated Phase		2				6										
Float Force Offs																
Hold to Force Off																
Hi Priority Ped																
Dynamic/Backup																

Options:	**(Y/N)**	
Split/Timing in percent?	N	
*Permissive Mode (0-4)	0	*0 = Auto
Enable Transition Permissive Mode?	N	1 = Open
Adjust Non-Coordinated Splits?	Y	2 = Manual
Cycle Once per Cycle Length?	Y	3 = Window
		4 = Walk

Active Pages:

Phase Sequence Page (1-12)	2
Phase Timing Page (1-4)	1
Phase Control Page (1-4)	1
OverLap Control Page (1-4)	1
Input Page (1-4)	1
Output Page (1-4)	1

Global Manual Permissive windows:

*Applies when "Window" permissive is selected

Manual Perm 1 End Point (0-255 sec)	0
Manual Perm 2 Start Point (0-255 sec)	0
Manual Perm 2 End Point (0-255 sec)	0

Manual Permissives by Phase:

*Applies when "Manual" permissive is selected

	Vehicle		Pedestrian	
(0-255 sec)	Start	Stop	Start	Stop
Phase 1	0	0	0	0
Phase 2	0	0	0	0
Phase 3	0	0	0	0
Phase 4	0	0	0	0
Phase 5	0	0	0	0
Phase 6	0	0	0	0
Phase 7	0	0	0	0
Phase 8	0	0	0	0
Phase 9	0	0	0	0
Phase 10	0	0	0	0
Phase 11	0	0	0	0
Phase 12	0	0	0	0
Phase 13	0	0	0	0
Phase 14	0	0	0	0
Phase 15	0	0	0	0
Phase 16	0	0	0	0

DocuSign Envelope ID: 5C03745C-4B01-4834-A65D-B77F558A4F46

1216 - 13-1216: NC 146/Long Shoals Road @ I-26 Ramps
2-1 Phase Control Functions Page 1
5/21/2021 1:29 PM

	1 2 3 4 5 6 7 8 9 10 11 12 13 14 15 16
Time Min 2	
Time Extension 2	
Time Max 2	
Soft Recall	
Minimum Recall	2 6
Maximum Recall 1	
Maximum Recall 2	
Call Non-Act 1	
Call Non-Act 2	
Omit Phase	
Dual Entry	4 8
No Skip	
Added Extension	
Simultaneous Gap	1 2 3 4 5 6 7 8
Guaranteed Passage	
Green Interval Flash	
Fast Green Flash	
Red Rest	
Backup Protection	
Inhibit Reservice	
Inhibit Max (Coord)	1 2 3 4 5 6 7 8 9 10 11 12 13 14 15 16
Inhibit Coordination	
Dynamic Max/Max3	
Variable Initial	2 6
Gap Reduction	2 6
Omit Pedestrian	
Time Walk 2	
Time FDWalk 2	

	1 2 3 4 5 6 7 8 9 10 11 12 13 14 15 16
Ped Soft Recall	
Ped Recall	
Rest In Walk	
Modified Rest In Walk	
Ped Reservice	
Flashing Walk	
Advanced Walk	
Delayed Walk	
Ped Yellow Clear	
Ped Red Clear	
Startup In Green	2 6
Startup In Yellow	
Startup Red Clear	
First Phases	
Startup Calls	
Startup Ped Calls	
Flash Entry	2 6
Yellow Flash	2 6
Wag Phases	1 3 6 8
Wag Overlaps	
Manual Control	1 2 3 4 5 6 7 8
Manual Control Omit Ped	
Red Detector Lock	
Yellow Detector Lock	2 6
Active Logic 1 - 16	
Active Logic 17 - 32	
Dynamic/Backup	

DocuSign Envelope ID: 5C03745C-4B01-4834-A65D-B77F558A4F46

1216 - 13-1216: NC 146/Long Shoals Road @ I-26 Ramps
4 - Phase Sequence Page 1
5/21/2021 1:29 PM

Rings	Barrier 1				Barrier 2				Barrier 3				Barrier 4			
1	1	2	0	0	0	4	0	0	0	0	0	0	0	0	0	0
2	5	6	0	0	0	8	0	0	0	0	0	0	0	0	0	0
3	0	0	0	0	0	0	0	0	0	0	0	0	0	0	0	0
4	0	0	0	0	0	0	0	0	0	0	0	0	0	0	0	0

Rings	Barrier 5				Barrier 6				Barrier 7				Barrier 8			
1	0	0	0	0	0	0	0	0	0	0	0	0	0	0	0	0
2	0	0	0	0	0	0	0	0	0	0	0	0	0	0	0	0
3	0	0	0	0	0	0	0	0	0	0	0	0	0	0	0	0
4	0	0	0	0	0	0	0	0	0	0	0	0	0	0	0	0

Phase Directions

1		5		9		13	
2		6		10		14	
3		7		11		15	
4		8		12		16	

DocuSign Envelope ID: 5C03745C-4B01-4834-A65D-B77F558A4F46

1216 - 13-1216: NC 146/Long Shoals Road @ I-26 Ramps
4 - Phase Sequence Page 2
5/21/2021 1:29 PM

Rings	Barrier 1				Barrier 2				Barrier 3				Barrier 4			
1	0	2	1	0	0	4	0	0	0	0	0	0	0	0	0	0
2	5	6	0	0	0	8	0	0	0	0	0	0	0	0	0	0
3	0	0	0	0	0	0	0	0	0	0	0	0	0	0	0	0
4	0	0	0	0	0	0	0	0	0	0	0	0	0	0	0	0

Rings	Barrier 5				Barrier 6				Barrier 7				Barrier 8			
1	0	0	0	0	0	0	0	0	0	0	0	0	0	0	0	0
2	0	0	0	0	0	0	0	0	0	0	0	0	0	0	0	0
3	0	0	0	0	0	0	0	0	0	0	0	0	0	0	0	0
4	0	0	0	0	0	0	0	0	0	0	0	0	0	0	0	0

Phase Directions

1		5		9		13	
2		6		10		14	
3		7		11		15	
4		8		12		16	

DocuSign Envelope ID: 5C03745C-4B01-4834-A65D-B77F558A4F46

1216 - 13-1216: NC 146/Long Shoals Road @ I-26 Ramps
4 - Phase Sequence Page 3
5/21/2021 1:29 PM

Rings	Barrier 1				Barrier 2				Barrier 3				Barrier 4			
1	1	2	0	0	0	4	0	0	0	0	0	0	0	0	0	0
2	0	6	5	0	0	8	0	0	0	0	0	0	0	0	0	0
3	0	0	0	0	0	0	0	0	0	0	0	0	0	0	0	0
4	0	0	0	0	0	0	0	0	0	0	0	0	0	0	0	0

Rings	Barrier 5				Barrier 6				Barrier 7				Barrier 8			
1	0	0	0	0	0	0	0	0	0	0	0	0	0	0	0	0
2	0	0	0	0	0	0	0	0	0	0	0	0	0	0	0	0
3	0	0	0	0	0	0	0	0	0	0	0	0	0	0	0	0
4	0	0	0	0	0	0	0	0	0	0	0	0	0	0	0	0

Phase Directions

1		5		9		13	
2		6		10		14	
3		7		11		15	
4		8		12		16	

DocuSign Envelope ID: 5C03745C-4B01-4834-A65D-B77F558A4F46

1216 - 13-1216: NC 146/Long Shoals Road @ I-26 Ramps
3 - Phase Timing 1
5/21/2021 1:29 PM

Phase Timing Elements	Phase															
	1	2	3	4	5	6	7	8	9	10	11	12	13	14	15	16
Minimum Green 1	7	12	0	7	7	12	0	7	0	0	0	0	0	0	0	0
Minimum Green 2	0	0	0	0	0	0	0	0	0	0	0	0	0	0	0	0
Re-service Green	0	0	0	0	0	0	0	0	0	0	0	0	0	0	0	0
Extension 1 (Gap 1)	2.0	6.0	0.0	2.0	2.0	6.0	0.0	2.0	0.0	0.0	0.0	0.0	0.0	0.0	0.0	0.0
Extension 2 (Gap 2)	0.0	0.0	0.0	0.0	0.0	0.0	0.0	0.0	0.0	0.0	0.0	0.0	0.0	0.0	0.0	0.0
Maximum Green 1	25	80	0	45	25	80	0	45	0	0	0	0	0	0	0	0
Maximum Green 2	0	0	0	0	0	0	0	0	0	0	0	0	0	0	0	0
Yellow Clearance	3.6	5.2	4.0	3.5	3.1	5.2	4.0	3.5	4.0	4.0	4.0	4.0	4.0	4.0	4.0	4.0
Red Clearance	3.9	3.8	2.0	4.5	5.2	3.8	2.0	4.5	0.0	2.0	2.0	2.0	2.0	2.0	2.0	2.0
Red Revert	2.0	2.0	2.0	2.0	2.0	2.0	2.0	2.0	0.0	2.0	2.0	2.0	2.0	2.0	2.0	2.0
Walk 1	0	0	0	0	0	0	0	0	0	0	0	0	0	0	0	0
Walk 2	0	0	0	0	0	0	0	0	0	0	0	0	0	0	0	0
Dont Walk 1	0	0	0	0	0	0	0	0	0	0	0	0	0	0	0	0
Dont Walk 2	0	0	0	0	0	0	0	0	0	0	0	0	0	0	0	0
Walk Advance Time	0.0	0.0	0.0	0.0	0.0	0.0	0.0	0.0	0.0	0.0	0.0	0.0	0.0	0.0	0.0	0.0
Walk Delay Time	0.0	0.0	0.0	0.0	0.0	0.0	0.0	0.0	0.0	0.0	0.0	0.0	0.0	0.0	0.0	0.0
Alternate Walk	0	0	0	0	0	0	0	0	0	0	0	0	0	0	0	0
Alternate Dont Walk	0	0	0	0	0	0	0	0	0	0	0	0	0	0	0	0
Alternate Min Green	0	0	0	0	0	0	0	0	0	0	0	0	0	0	0	0
Dynamic Max / Max 3	0	0	0	0	0	0	0	0	0	0	0	0	0	0	0	0
Dynamic Max Adjust	0.0	0.0	0.0	0.0	0.0	0.0	0.0	0.0	0.0	0.0	0.0	0.0	0.0	0.0	0.0	0.0
Seconds / Actuation	0.0	1.5	0.0	0.0	0.0	1.5	0.0	0.0	0.0	0.0	0.0	0.0	0.0	0.0	0.0	0.0
Max Variable Initial	0	34	0	0	0	34	0	0	0	0	0	0	0	0	0	0
Time Before Reduction	0	15	0	0	0	15	0	0	0	0	0	0	0	0	0	0
Time To Reduce	0	30	0	0	0	30	0	0	0	0	0	0	0	0	0	0
Minimum Gap	0.0	3.0	0.0	0.0	0.0	3.0	0.0	0.0	0.0	0.0	0.0	0.0	0.0	0.0	0.0	0.0
Alt Flash Frequency (0-25.5 Hz)	1.0															

DocuSign Envelope ID: 5C03745C-4B01-4834-A65D-B77F558A4F46

PROJECT REFERENCE NO.	SHEET NO.
I-4700	Sig. 7.0

PHASING DIAGRAM

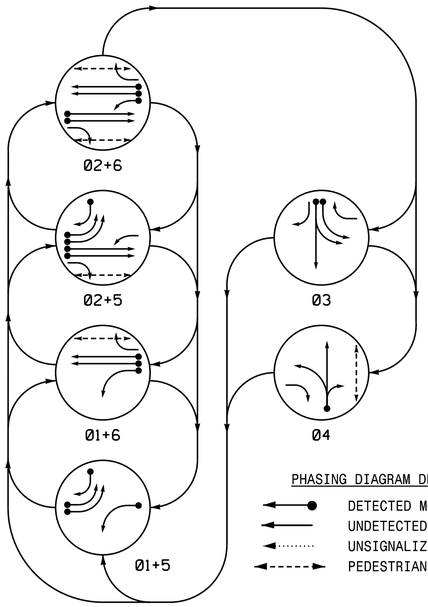

PHASING DIAGRAM DETECTION LEGEND

- DETECTED MOVEMENT
- UNDETECTED MOVEMENT (OVERLAP)
- UNSIGNALIZED MOVEMENT
- PEDESTRIAN MOVEMENT

TABLE OF OPERATION

SIGNAL FACE	PHASE						
	Ø1+5	Ø1+6	Ø2+5	Ø2+6	Ø3	Ø4	FLASH
11	←	←	F/Y	F/Y	R	R	Y
21	R	R	G	G	R	R	Y
22	R	R	G	G	R	R/←	Y
31	R	R	R	R	G/←	R	R
32	R/→	R	R/→	R	G	R	R
41	R	R	R	R	R	G/←	R
42	R	R	R	R	R	G	R
51,52	←	R	←	R	R	R	R
61	R	G	R	G	R	R	Y
62	R	G	R	G	R/←	R	Y
P21,22	DW	DW	W	W	DW	DW	DRK
P41,42	DW	DW	DW	DW	DW	W	DRK
P61,62	DW	W	DW	W	DW	DW	DRK

SIGNAL FACE I.D.

All Heads L.E.D.

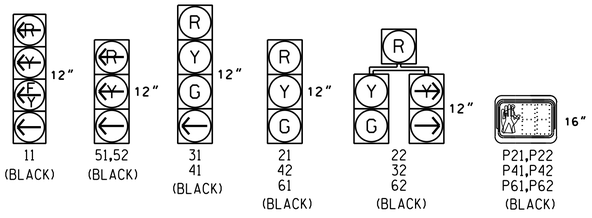

OASIS 2070 LOOP & DETECTOR INSTALLATION CHART

INDUCTIVE LOOPS					DETECTOR PROGRAMMING						
LOOP	SIZE (FT)	DISTANCE FROM STOPBAR (FT)	TURNS	NEW LOOP	PHASE	CALLING	EXTENSION	FULL TIME DELAY	STRETCH TIME	DELAY TIME	SYSTEM LOOP	NEW CARD
1A	6X60	0	2-4-2	-	1	Y	Y	-	-	15	-	-
					6	Y	Y	Y	-	3	-	-
2A	6X6	300	4	-	2	Y	Y	-	-	-	-	-
2B	6X6	300	4	-	2	Y	Y	-	-	-	-	-
3A	6X40	0	2-4-2	-	3	Y	Y	-	-	3	-	-
3B	6X40	0	2-4-2	-	3	Y	Y	-	-	-	-	-
4A	6X40	0	2-4-2	-	4	Y	Y	-	-	10	-	-
5A	6X40	0	2-4-2	-	5	Y	Y	-	-	-	-	-
5B	6X40	0	2-4-2	-	5	Y	Y	-	-	-	-	-
5C	6X40	0	2-4-2	-	5	Y	Y	-	-	15	-	-
6A	6X6	300	6	-	6	Y	Y	-	-	-	-	-
6B	6X6	300	6	-	6	Y	Y	-	-	-	-	-
S1	6X6	+120	4	-	-	-	-	-	-	-	Y	-
S2	6X6	+120	4	-	-	-	-	-	-	-	Y	-
S3	6X6	+130	4	-	-	-	-	-	-	-	Y	-
S4	6X6	+130	4	-	-	-	-	-	-	-	Y	-

OASIS 2070 TIMING CHART

FEATURE	PHASE					
	1	2	3	4	5	6
Min Green 1 *	7	12	7	7	7	12
Extension 1 *	1.0	6.0	2.0	2.0	2.0	6.0
Max Green 1 *	15	100	30	20	15	100
Yellow Clearance	3.1	4.1	3.0	3.0	3.0	5.1
Red Clearance	3.2	1.6	3.4	3.3	3.3	1.5
Red Revert	2.0	2.0	2.0	2.0	2.0	2.0
Walk 1 *	-	7	-	7	-	7
Don't Walk 1	-	8	-	26	-	19
Seconds Per Actuation *	-	1.5	-	-	-	1.5
Max Variable Initial *	-	34	-	-	-	34
Time Before Reduction *	-	20	-	-	-	20
Time To Reduce *	-	30	-	-	-	30
Minimum Gap	-	3.0	-	-	-	3.0
Recall Mode	-	MIN RECALL	-	-	-	MIN RECALL
Vehicle Call Memory	-	YELLOW	-	-	-	YELLOW
Dual Entry	-	-	-	-	-	-
Simultaneous Gap	ON	ON	ON	ON	ON	ON

* These values may be field adjusted. Do not adjust Min Green and Extension times for phases 2 and 6 lower than what is shown. Min Green for all other phases should not be lower than 4 seconds.

6 Phase
Fully Actuated
Asheville Signal System

NOTES

1. Refer to "Roadway Standard Drawings NCDOT" dated January 2018 and "Standard Specifications for Roads and Structures" dated January 2018.
2. Do not program signal for late night flashing operation unless otherwise directed by the Engineer.
3. Phase 1 and/or 5 may be lagged.
4. The order of phase 3 and phase 4 may be reversed.
5. Set all detector units to presence mode.
6. Omit "WALK" and flashing "DON'T WALK" with no pedestrian calls.
7. Program pedestrian heads to countdown the flashing "DON'T WALK" time only.
8. Maximum times shown in timing chart are for free-run operation only. Coordinated signal system timing values supersede these values.

LEGEND

PROPOSED		EXISTING
○→	Traffic Signal Head	●→
◐→	Modified Signal Head	N/A
⊣	Sign	⊣
□↓	Pedestrian Signal Head With Push Button & Sign	■↓
○	Signal Pole with Guy	●
○	Signal Pole with Sidewalk Guy	●
▭	Inductive Loop Detector	▭
⊠	Controller & Cabinet	⊠
□	Junction Box	■
·····	2-in Underground Conduit	·····
N/A	Right of Way	———
→	Directional Arrow	→
—DD—	Directional Drill	N/A
⬭	Metal Pole with Mastarm	⬭
⬡	Type II Signal Pedestal	⬢
⩚	Wheelchair Ramp	⩚
Ⓐ	Left Arrow "ONLY" Sign (R3-5L)	Ⓐ
Ⓑ	Combined Through and Left Arrow Sign (R3-6L)	Ⓑ
Ⓒ	No U-Turn Sign (R3-4)	Ⓒ

Signal Upgrade - Final Design

DOCUMENT NOT CONSIDERED FINAL UNLESS ALL SIGNATURES COMPLETED

Prepared For:
Transportation Mobility and Safety Division
NORTH CAROLINA DEPARTMENT OF TRANSPORTATION
Signal Design Section
750 N.Greenfield Pkwy.Garner,NC 27529

NC 146 (Long Shoals Road) at Schenck Parkway / Skyland Inn Drive

Division 13 Buncombe Co. Asheville

PLAN DATE: September 2018 REVIEWED BY: A.D. Klinksiek

PREPARED BY: A.H. Thornburg REVIEWED BY: N.R. Simmons

0 30
1"=30'

REVISIONS	INIT.	DATE

SEAL
NORTH CAROLINA PROFESSIONAL SEAL 031464 ENGINEER NATASHA R. SIMMONS

DocuSigned by: Natasha R. Simmons 1/28/2019
SIGNATURE DATE

SIG. INVENTORY NO. 13-1126

HNTB NORTH CAROLINA, P.C.
343 E. Six Forks Road, Suite 200
Raleigh, North Carolina 27609
NC License No: C-1554
(919) 546-8997

DocuSign Envelope ID: 5C03745C-4B01-4834-A65D-B77F558A4F46

1126 - 13-1126: NC 146/Long Shoals Road @ Schenck Pkwy / Skyland Inn Dr
B - Scheduling Events 1-100
5/21/2021 12:54 PM

Event #	Event Type	Event Details	Pri LMH	Start Date MM	Start Date DD	Stop Date MM	Stop Date DD	Start Time HH	Start Time MM	Stop Time HH	Stop Time MM	DOW Enabled 1 2 3 4 5 6 7	Del When Done	Cont	Event Groups Assigned 1 2 3 4 5 6 7 8 9 10 11 12 13 14 15 16
1	None			0	0	0	0	0	0	0	0		N	N	
2	None			0	0	0	0	0	0	0	0		N	N	
3	None			0	0	0	0	0	0	0	0		N	N	
4	None			0	0	0	0	0	0	0	0		N	N	
5	None			0	0	0	0	0	0	0	0		N	N	
6	None			0	0	0	0	0	0	0	0		N	N	
7	None			0	0	0	0	0	0	0	0		N	N	
8	None			0	0	0	0	0	0	0	0		N	N	
9	None			0	0	0	0	0	0	0	0		N	N	
10	None			0	0	0	0	0	0	0	0		N	N	
11	Coordination Plan	1-1	L	1	1	12	31	6	45	9	0	2 3 4 5 6	N	N	
12	Coordination Plan	2-1	L	1	1	12	31	9	0	11	15	2 3 4 5 6	N	N	
13	Coordination Plan	3-1	L	1	1	12	31	11	15	14	15	2 3 4 5 6	N	N	
14	Coordination Plan	4-1	L	1	1	12	31	14	15	18	30	2 3 4 5 6	N	N	
15	Coordination Plan	3-1	L	1	1	12	31	18	30	19	45	2 3 4 5 6	N	N	
16	Coordination Plan	3-1	L	1	1	12	31	10	0	19	0	7	N	N	
17	Coordination Plan	9-1	L	1	1	12	31	10	10	10	50	1	N	N	
18	Coordination Plan	9-1	L	1	1	12	31	12	10	12	50	1	N	N	
19	Coordination Plan	3-1	L	1	1	12	31	12	50	19	0	1	N	N	
20	None			0	0	0	0	0	0	0	0		N	N	
21	None			0	0	0	0	0	0	0	0		N	N	
22	None			0	0	0	0	0	0	0	0		N	N	
23	None			0	0	0	0	0	0	0	0		N	N	
24	None			0	0	0	0	0	0	0	0		N	N	
25	None			0	0	0	0	0	0	0	0		N	N	
26	None			0	0	0	0	0	0	0	0		N	N	
27	None			0	0	0	0	0	0	0	0		N	N	
28	None			0	0	0	0	0	0	0	0		N	N	
29	None			0	0	0	0	0	0	0	0		N	N	
30	None			0	0	0	0	0	0	0	0		N	N	
31	None			0	0	0	0	0	0	0	0		N	N	
32	None			0	0	0	0	0	0	0	0		N	N	
33	None			0	0	0	0	0	0	0	0		N	N	
34	None			0	0	0	0	0	0	0	0		N	N	
35	None			0	0	0	0	0	0	0	0		N	N	
36	None			0	0	0	0	0	0	0	0		N	N	
37	None			0	0	0	0	0	0	0	0		N	N	
38	None			0	0	0	0	0	0	0	0		N	N	
39	None			0	0	0	0	0	0	0	0		N	N	
40	None			0	0	0	0	0	0	0	0		N	N	
41	Coordination Plan	Free	M	1	1	1	1	0	0	24	0	2 3 4 5 6	N	N	
42	Coordination Plan	Free	M	11	22	11	29	17	30	21	15	5	N	N	
43	Coordination Plan	Free	M	12	25	12	25	10	0	12	15	1 2 3 4 5 6 7	N	N	
44	None			0	0	0	0	0	0	0	0		N	N	
45	None			0	0	0	0	0	0	0	0		N	N	
46	None			0	0	0	0	0	0	0	0		N	N	
47	None			0	0	0	0	0	0	0	0		N	N	
48	None			0	0	0	0	0	0	0	0		N	N	
49	None			0	0	0	0	0	0	0	0		N	N	
50	None			0	0	0	0	0	0	0	0		N	N	

DocuSign Envelope ID: 5C03745C-4B01-4834-A65D-B77F558A4F46

1126 - 13-1126: NC 146/Long Shoals Road @ Schenck Pkwy / Skyland Inn Dr
9 - Coordination Plan 1
5/21/2021 12:54 PM

Coordination Plan # 1

Cycle length (0-999 sec)	120
Min Transition Cycle (0-999 sec)	100
Max Transition Cycle (0-999 sec)	140

Offset # or Ring:	1	2	3	4
Offsets (0-999 sec)	70	0	0	0
Act Coord Phase Min Green (0-255)	0	0	0	0

Splits (0-255 sec)

Phase	1	2	3	4	5	6	7	8
Split	15	68	22	15	39	44	0	0
Phase	9	10	11	12	13	14	15	16
Split	0	0	0	0	0	0	0	0

Verify Plan Data

Phase/Function Settings:

	1	2	3	4	5	6	7	8	9	10	11	12	13	14	15	16
Coordinated Phase		2				6										
Float Force Offs																
Hold to Force Off																
Hi Priority Ped				4												
Dynamic/Backup																

Options:	**(Y/N)**	
Split/Timing in percent?	N	
*Permissive Mode (0-4)	0	*0 = Auto
Enable Transition Permissive Mode?	N	1 = Open
Adjust Non-Coordinated Splits?	Y	2 = Manual
Cycle Once per Cycle Length?	Y	3 = Window
		4 = Walk

Active Pages:	
Phase Sequence Page (1-12)	5
Phase Timing Page (1-4)	1
Phase Control Page (1-4)	1
OverLap Control Page (1-4)	1
Input Page (1-4)	1
Output Page (1-4)	1

Global Manual Permissive windows:

*Applies when "Window" permissive is selected

Manual Perm 1 End Point (0-255 sec)	0
Manual Perm 2 Start Point (0-255 sec)	0
Manual Perm 2 End Point (0-255 sec)	0

Manual Permissives by Phase:

*Applies when "Manual" permissive is selected

	Vehicle		Pedestrian	
(0-255 sec)	Start	Stop	Start	Stop
Phase 1	0	0	0	0
Phase 2	0	0	0	0
Phase 3	0	0	0	0
Phase 4	0	0	0	0
Phase 5	0	0	0	0
Phase 6	0	0	0	0
Phase 7	0	0	0	0
Phase 8	0	0	0	0
Phase 9	0	0	0	0
Phase 10	0	0	0	0
Phase 11	0	0	0	0
Phase 12	0	0	0	0
Phase 13	0	0	0	0
Phase 14	0	0	0	0
Phase 15	0	0	0	0
Phase 16	0	0	0	0

DocuSign Envelope ID: 5C03745C-4B01-4834-A65D-B77F558A4F46

1126 - 13-1126: NC 146/Long Shoals Road @ Schenck Pkwy / Skyland Inn Dr
9 - Coordination Plan 2
5/21/2021 12:54 PM

Coordination Plan # 2

Cycle length (0-999 sec)	100
Min Transition Cycle (0-999 sec)	80
Max Transition Cycle (0-999 sec)	120

Offset # or Ring:	1	2	3	4
Offsets (0-999 sec)	25	0	0	0
Act Coord Phase Min Green (0-255)	0	0	0	0

Splits (0-255 sec)

Phase	1	2	3	4	5	6	7	8
Split	15	45	26	14	26	34	0	0
Phase	9	10	11	12	13	14	15	16
Split	0	0	0	0	0	0	0	0

Verify Plan Data

Phase/Function Settings:

	1	2	3	4	5	6	7	8	9	10	11	12	13	14	15	16
Coordinated Phase		2				6										
Float Force Offs																
Hold to Force Off																
Hi Priority Ped				4												
Dynamic/Backup																

Options:	**(Y/N)**	
Split/Timing in percent?	N	
*Permissive Mode (0-4)	0	*0 = Auto
Enable Transition Permissive Mode?	N	1 = Open
Adjust Non-Coordinated Splits?	Y	2 = Manual
Cycle Once per Cycle Length?	Y	3 = Window
		4 = Walk

Active Pages:	
Phase Sequence Page (1-12)	6
Phase Timing Page (1-4)	1
Phase Control Page (1-4)	1
OverLap Control Page (1-4)	1
Input Page (1-4)	1
Output Page (1-4)	1

Global Manual Permissive windows:

*Applies when "Window" permissive is selected

Manual Perm 1 End Point (0-255 sec)	0
Manual Perm 2 Start Point (0-255 sec)	0
Manual Perm 2 End Point (0-255 sec)	0

Manual Permissives by Phase:

*Applies when "Manual" permissive is selected

	Vehicle		Pedestrian	
(0-255 sec)	Start	Stop	Start	Stop
Phase 1	0	0	0	0
Phase 2	0	0	0	0
Phase 3	0	0	0	0
Phase 4	0	0	0	0
Phase 5	0	0	0	0
Phase 6	0	0	0	0
Phase 7	0	0	0	0
Phase 8	0	0	0	0
Phase 9	0	0	0	0
Phase 10	0	0	0	0
Phase 11	0	0	0	0
Phase 12	0	0	0	0
Phase 13	0	0	0	0
Phase 14	0	0	0	0
Phase 15	0	0	0	0
Phase 16	0	0	0	0

DocuSign Envelope ID: 5C03745C-4B01-4834-A65D-B77F558A4F46

1126 - 13-1126: NC 146/Long Shoals Road @ Schenck Pkwy / Skyland Inn Dr
9 - Coordination Plan 3
5/21/2021 12:54 PM

Coordination Plan # 3

Cycle length (0-999 sec)	110
Min Transition Cycle (0-999 sec)	90
Max Transition Cycle (0-999 sec)	130

Offset # or Ring:	1	2	3	4
Offsets (0-999 sec)	105	0	0	0
Act Coord Phase Min Green (0-255)	0	0	0	0

Splits (0-255 sec)

Phase	1	2	3	4	5	6	7	8
Split	15	48	32	15	28	35	0	0
Phase	9	10	11	12	13	14	15	16
Split	0	0	0	0	0	0	0	0

Verify Plan Data

Phase/Function Settings:

	1	2	3	4	5	6	7	8	9	10	11	12	13	14	15	16
Coordinated Phase		2				6										
Float Force Offs																
Hold to Force Off																
Hi Priority Ped				4												
Dynamic/Backup																

Options:	**(Y/N)**	
Split/Timing in percent?	N	
*Permissive Mode (0-4)	0	*0 = Auto
Enable Transition Permissive Mode?	N	1 = Open
Adjust Non-Coordinated Splits?	Y	2 = Manual
Cycle Once per Cycle Length?	Y	3 = Window
		4 = Walk

Active Pages:	
Phase Sequence Page (1-12)	5
Phase Timing Page (1-4)	1
Phase Control Page (1-4)	1
OverLap Control Page (1-4)	1
Input Page (1-4)	1
Output Page (1-4)	1

Global Manual Permissive windows:

*Applies when "Window" permissive is selected

Manual Perm 1 End Point (0-255 sec)	0
Manual Perm 2 Start Point (0-255 sec)	0
Manual Perm 2 End Point (0-255 sec)	0

Manual Permissives by Phase:

*Applies when "Manual" permissive is selected

	Vehicle		Pedestrian	
(0-255 sec)	Start	Stop	Start	Stop
Phase 1	0	0	0	0
Phase 2	0	0	0	0
Phase 3	0	0	0	0
Phase 4	0	0	0	0
Phase 5	0	0	0	0
Phase 6	0	0	0	0
Phase 7	0	0	0	0
Phase 8	0	0	0	0
Phase 9	0	0	0	0
Phase 10	0	0	0	0
Phase 11	0	0	0	0
Phase 12	0	0	0	0
Phase 13	0	0	0	0
Phase 14	0	0	0	0
Phase 15	0	0	0	0
Phase 16	0	0	0	0

DocuSign Envelope ID: 5C03745C-4B01-4834-A65D-B77F558A4F46

1126 - 13-1126: NC 146/Long Shoals Road @ Schenck Pkwy / Skyland Inn Dr
9 - Coordination Plan 4
5/21/2021 12:54 PM

Coordination Plan # 4

Cycle length (0-999 sec)	120
Min Transition Cycle (0-999 sec)	100
Max Transition Cycle (0-999 sec)	140

Offset # or Ring:	1	2	3	4
Offsets (0-999 sec)	69	0	0	0
Act Coord Phase Min Green (0-255)	0	0	0	0

Splits (0-255 sec)

Phase	1	2	3	4	5	6	7	8
Split	15	66	23	16	32	49	0	0
Phase	9	10	11	12	13	14	15	16
Split	0	0	0	0	0	0	0	0

Verify Plan Data

Phase/Function Settings:

	1	2	3	4	5	6	7	8	9	10	11	12	13	14	15	16
Coordinated Phase		2				6										
Float Force Offs																
Hold to Force Off																
Hi Priority Ped				4												
Dynamic/Backup																

Options:	**(Y/N)**	
Split/Timing in percent?	N	
*Permissive Mode (0-4)	0	*0 = Auto
Enable Transition Permissive Mode?	N	1 = Open
Adjust Non-Coordinated Splits?	Y	2 = Manual
Cycle Once per Cycle Length?	Y	3 = Window
		4 = Walk

Active Pages:	
Phase Sequence Page (1-12)	5
Phase Timing Page (1-4)	1
Phase Control Page (1-4)	1
OverLap Control Page (1-4)	1
Input Page (1-4)	1
Output Page (1-4)	1

Global Manual Permissive windows:

*Applies when "Window" permissive is selected

Manual Perm 1 End Point (0-255 sec)	0
Manual Perm 2 Start Point (0-255 sec)	0
Manual Perm 2 End Point (0-255 sec)	0

Manual Permissives by Phase:

*Applies when "Manual" permissive is selected

	Vehicle		Pedestrian	
(0-255 sec)	Start	Stop	Start	Stop
Phase 1	0	0	0	0
Phase 2	0	0	0	0
Phase 3	0	0	0	0
Phase 4	0	0	0	0
Phase 5	0	0	0	0
Phase 6	0	0	0	0
Phase 7	0	0	0	0
Phase 8	0	0	0	0
Phase 9	0	0	0	0
Phase 10	0	0	0	0
Phase 11	0	0	0	0
Phase 12	0	0	0	0
Phase 13	0	0	0	0
Phase 14	0	0	0	0
Phase 15	0	0	0	0
Phase 16	0	0	0	0

DocuSign Envelope ID: 5C03745C-4B01-4834-A65D-B77F558A4F46

1126 - 13-1126: NC 146/Long Shoals Road @ Schenck Pkwy / Skyland Inn Dr
9 - Coordination Plan 9
5/21/2021 12:54 PM

Coordination Plan # 9

Cycle length (0-999 sec)	125
Min Transition Cycle (0-999 sec)	80
Max Transition Cycle (0-999 sec)	160

Offset # or Ring:	1	2	3	4
Offsets (0-999 sec)	18	0	0	0
Act Coord Phase Min Green (0-255)	0	0	0	0

Splits (0-255 sec)

Phase	1	2	3	4	5	6	7	8
Split	15	70	25	15	45	40	0	0
Phase	9	10	11	12	13	14	15	16
Split	0	0	0	0	0	0	0	0

Verify Plan Data

Phase/Function Settings:

	1	2	3	4	5	6	7	8	9	10	11	12	13	14	15	16
Coordinated Phase		2				6										
Float Force Offs																
Hold to Force Off																
Hi Priority Ped				4												
Dynamic/Backup																

Options:	**(Y/N)**	
Split/Timing in percent?	N	
*Permissive Mode (0-4)	0	*0 = Auto
Enable Transition Permissive Mode?	N	1 = Open
Adjust Non-Coordinated Splits?	Y	2 = Manual
Cycle Once per Cycle Length?	Y	3 = Window
		4 = Walk

Active Pages:	
Phase Sequence Page (1-12)	2
Phase Timing Page (1-4)	2
Phase Control Page (1-4)	2
OverLap Control Page (1-4)	1
Input Page (1-4)	1
Output Page (1-4)	1

Global Manual Permissive windows:

*Applies when "Window" permissive is selected

Manual Perm 1 End Point (0-255 sec)	0
Manual Perm 2 Start Point (0-255 sec)	0
Manual Perm 2 End Point (0-255 sec)	0

Manual Permissives by Phase:

*Applies when "Manual" permissive is selected

	Vehicle		Pedestrian	
(0-255 sec)	Start	Stop	Start	Stop
Phase 1	0	0	0	0
Phase 2	0	0	0	0
Phase 3	0	0	0	0
Phase 4	0	0	0	0
Phase 5	0	0	0	0
Phase 6	0	0	0	0
Phase 7	0	0	0	0
Phase 8	0	0	0	0
Phase 9	0	0	0	0
Phase 10	0	0	0	0
Phase 11	0	0	0	0
Phase 12	0	0	0	0
Phase 13	0	0	0	0
Phase 14	0	0	0	0
Phase 15	0	0	0	0
Phase 16	0	0	0	0

DocuSign Envelope ID: 5C03745C-4B01-4834-A65D-B77F558A4F46

1126 - 13-1126: NC 146/Long Shoals Road @ Schenck Pkwy / Skyland Inn Dr
2-1 Phase Control Functions Page 1
5/21/2021 12:54 PM

	1 2 3 4 5 6 7 8 9 10 11 12 13 14 15 16
Time Min 2	
Time Extension 2	
Time Max 2	
Soft Recall	
Minimum Recall	2 6
Maximum Recall 1	
Maximum Recall 2	
Call Non-Act 1	
Call Non-Act 2	
Omit Phase	
Dual Entry	
No Skip	
Added Extension	
Simultaneous Gap	1 2 3 4 5 6 7 8
Guaranteed Passage	
Green Interval Flash	
Fast Green Flash	
Red Rest	
Backup Protection	
Inhibit Reservice	
Inhibit Max (Coord)	1 2 3 4 5 6 7 8 9 10 11 12 13 14 15 16
Inhibit Coordination	
Dynamic Max/Max3	
Variable Initial	2 6
Gap Reduction	2 6
Omit Pedestrian	
Time Walk 2	
Time FDWalk 2	

	1 2 3 4 5 6 7 8 9 10 11 12 13 14 15 16
Ped Soft Recall	
Ped Recall	
Rest In Walk	
Modified Rest In Walk	
Ped Reservice	
Flashing Walk	
Advanced Walk	
Delayed Walk	
Ped Yellow Clear	
Ped Red Clear	
Startup In Green	2 6
Startup In Yellow	
Startup Red Clear	
First Phases	
Startup Calls	
Startup Ped Calls	2 4 6
Flash Entry	2 6
Yellow Flash	2 6
Wag Phases	1 3 6 8
Wag Overlaps	1
Manual Control	1 2 3 4 5 6 7 8
Manual Control Omit Ped	
Red Detector Lock	
Yellow Detector Lock	2 6
Active Logic 1 - 16	1 2 3 4 5 6
Active Logic 17 - 32	
Dynamic/Backup	

DocuSign Envelope ID: 5C03745C-4B01-4834-A65D-B77F558A4F46

1126 - 13-1126: NC 146/Long Shoals Road @ Schenck Pkwy / Skyland Inn Dr
2-1 Phase Control Functions Page 2
5/21/2021 12:54 PM

	1 2 3 4 5 6 7 8 9 10 11 12 13 14 15 16
Time Min 2	
Time Extension 2	
Time Max 2	
Soft Recall	
Minimum Recall	2 5 6
Maximum Recall 1	
Maximum Recall 2	
Call Non-Act 1	
Call Non-Act 2	
Omit Phase	
Dual Entry	
No Skip	
Added Extension	
Simultaneous Gap	1 2 3 4 5 6 7 8
Guaranteed Passage	
Green Interval Flash	
Fast Green Flash	
Red Rest	
Backup Protection	
Inhibit Reservice	
Inhibit Max (Coord)	1 2 3 4 5 6 7 8 9 10 11 12 13 14 15 16
Inhibit Coordination	
Dynamic Max/Max3	
Variable Initial	2 6
Gap Reduction	2 6
Omit Pedestrian	
Time Walk 2	
Time FDWalk 2	

	1 2 3 4 5 6 7 8 9 10 11 12 13 14 15 16
Ped Soft Recall	
Ped Recall	
Rest In Walk	
Modified Rest In Walk	
Ped Reservice	
Flashing Walk	
Advanced Walk	
Delayed Walk	
Ped Yellow Clear	
Ped Red Clear	
Startup In Green	2 6
Startup In Yellow	
Startup Red Clear	
First Phases	
Startup Calls	
Startup Ped Calls	2 4 6
Flash Entry	2 6
Yellow Flash	2 6
Wag Phases	1 3 6 8
Wag Overlaps	1
Manual Control	1 2 3 4 5 6 7 8
Manual Control Omit Ped	
Red Detector Lock	
Yellow Detector Lock	2 6
Active Logic 1 - 16	1 2 3 4 5 6
Active Logic 17 - 32	
Dynamic/Backup	

DocuSign Envelope ID: 5C03745C-4B01-4834-A65D-B77F558A4F46

1126 - 13-1126: NC 146/Long Shoals Road @ Schenck Pkwy / Skyland Inn Dr
4 - Phase Sequence Page 1
5/21/2021 12:54 PM

Rings	Barrier 1				Barrier 2				Barrier 3				Barrier 4			
1	1	2	0	0	3	4	0	0	0	0	0	0	0	0	0	0
2	5	6	0	0	0	0	0	0	0	0	0	0	0	0	0	0
3	0	0	0	0	0	0	0	0	0	0	0	0	0	0	0	0
4	0	0	0	0	0	0	0	0	0	0	0	0	0	0	0	0

Rings	Barrier 5				Barrier 6				Barrier 7				Barrier 8			
1	0	0	0	0	0	0	0	0	0	0	0	0	0	0	0	0
2	0	0	0	0	0	0	0	0	0	0	0	0	0	0	0	0
3	0	0	0	0	0	0	0	0	0	0	0	0	0	0	0	0
4	0	0	0	0	0	0	0	0	0	0	0	0	0	0	0	0

Phase Directions

1		5		9		13	
2		6		10		14	
3		7		11		15	
4		8		12		16	

DocuSign Envelope ID: 5C03745C-4B01-4834-A65D-B77F558A4F46

1126 - 13-1126: NC 146/Long Shoals Road @ Schenck Pkwy / Skyland Inn Dr
4 - Phase Sequence Page 2
5/21/2021 12:54 PM

Rings	Barrier 1				Barrier 2				Barrier 3				Barrier 4			
1	0	2	1	0	3	4	0	0	0	0	0	0	0	0	0	0
2	5	6	0	0	0	0	0	0	0	0	0	0	0	0	0	0
3	0	0	0	0	0	0	0	0	0	0	0	0	0	0	0	0
4	0	0	0	0	0	0	0	0	0	0	0	0	0	0	0	0

Rings	Barrier 5				Barrier 6				Barrier 7				Barrier 8			
1	0	0	0	0	0	0	0	0	0	0	0	0	0	0	0	0
2	0	0	0	0	0	0	0	0	0	0	0	0	0	0	0	0
3	0	0	0	0	0	0	0	0	0	0	0	0	0	0	0	0
4	0	0	0	0	0	0	0	0	0	0	0	0	0	0	0	0

Phase Directions

1		5		9		13	
2		6		10		14	
3		7		11		15	
4		8		12		16	

DocuSign Envelope ID: 5C03745C-4B01-4834-A65D-B77F558A4F46

1126 - 13-1126: NC 146/Long Shoals Road @ Schenck Pkwy / Skyland Inn Dr
4 - Phase Sequence Page 5
5/21/2021 12:54 PM

Rings	Barrier 1				Barrier 2				Barrier 3				Barrier 4			
1	0	2	1	0	0	4	3	0	0	0	0	0	0	0	0	0
2	5	6	0	0	0	0	0	0	0	0	0	0	0	0	0	0
3	0	0	0	0	0	0	0	0	0	0	0	0	0	0	0	0
4	0	0	0	0	0	0	0	0	0	0	0	0	0	0	0	0

Rings	Barrier 5				Barrier 6				Barrier 7				Barrier 8			
1	0	0	0	0	0	0	0	0	0	0	0	0	0	0	0	0
2	0	0	0	0	0	0	0	0	0	0	0	0	0	0	0	0
3	0	0	0	0	0	0	0	0	0	0	0	0	0	0	0	0
4	0	0	0	0	0	0	0	0	0	0	0	0	0	0	0	0

Phase Directions

1		5		9		13	
2		6		10		14	
3		7		11		15	
4		8		12		16	

DocuSign Envelope ID: 5C03745C-4B01-4834-A65D-B77F558A4F46

1126 - 13-1126: NC 146/Long Shoals Road @ Schenck Pkwy / Skyland Inn Dr
4 - Phase Sequence Page 6
5/21/2021 12:54 PM

Rings	Barrier 1				Barrier 2				Barrier 3				Barrier 4			
1	1	2	0	0	0	4	3	0	0	0	0	0	0	0	0	0
2	0	6	5	0	0	0	0	0	0	0	0	0	0	0	0	0
3	0	0	0	0	0	0	0	0	0	0	0	0	0	0	0	0
4	0	0	0	0	0	0	0	0	0	0	0	0	0	0	0	0

Rings	Barrier 5				Barrier 6				Barrier 7				Barrier 8			
1	0	0	0	0	0	0	0	0	0	0	0	0	0	0	0	0
2	0	0	0	0	0	0	0	0	0	0	0	0	0	0	0	0
3	0	0	0	0	0	0	0	0	0	0	0	0	0	0	0	0
4	0	0	0	0	0	0	0	0	0	0	0	0	0	0	0	0

Phase Directions

1		5		9		13	
2		6		10		14	
3		7		11		15	
4		8		12		16	

DocuSign Envelope ID: 5C03745C-4B01-4834-A65D-B77F558A4F46

1126 - 13-1126: NC 146/Long Shoals Road @ Schenck Pkwy / Skyland Inn Dr
3 - Phase Timing 1
5/21/2021 12:54 PM

Phase Timing Elements	Phase															
	1	2	3	4	5	6	7	8	9	10	11	12	13	14	15	16
Minimum Green 1	7	12	7	7	7	12	0	0	0	0	0	0	0	0	0	0
Minimum Green 2	0	0	0	0	0	0	0	0	0	0	0	0	0	0	0	0
Re-service Green	0	0	0	0	0	0	0	0	0	0	0	0	0	0	0	0
Extension 1 (Gap 1)	2.0	6.0	3.0	3.0	3.0	6.0	0.0	0.0	0.0	0.0	0.0	0.0	0.0	0.0	0.0	0.0
Extension 2 (Gap 2)	0.0	0.0	0.0	0.0	0.0	0.0	0.0	0.0	0.0	0.0	0.0	0.0	0.0	0.0	0.0	0.0
Maximum Green 1	20	100	45	20	45	100	0	0	0	0	0	0	0	0	0	0
Maximum Green 2	0	0	0	0	0	0	0	0	0	0	0	0	0	0	0	0
Yellow Clearance	3.1	5.1	3.5	3.0	3.0	5.1	4.0	4.0	4.0	4.0	4.0	4.0	4.0	4.0	4.0	4.0
Red Clearance	3.1	1.7	2.8	3.2	2.8	1.7	2.0	2.0	2.0	2.0	2.0	2.0	2.0	2.0	2.0	2.0
Red Revert	2.0	2.0	2.0	2.0	2.0	2.0	2.0	2.0	2.0	2.0	2.0	2.0	2.0	2.0	2.0	2.0
Walk 1	0	7	0	7	0	7	0	0	0	0	0	0	0	0	0	0
Walk 2	0	0	0	0	0	0	0	0	0	0	0	0	0	0	0	0
Dont Walk 1	0	8	0	25	0	20	0	0	0	0	0	0	0	0	0	0
Dont Walk 2	0	0	0	0	0	0	0	0	0	0	0	0	0	0	0	0
Walk Advance Time	0.0	0.0	0.0	0.0	0.0	0.0	0.0	0.0	0.0	0.0	0.0	0.0	0.0	0.0	0.0	0.0
Walk Delay Time	0.0	0.0	0.0	0.0	0.0	0.0	0.0	0.0	0.0	0.0	0.0	0.0	0.0	0.0	0.0	0.0
Alternate Walk	0	0	0	0	0	0	0	0	0	0	0	0	0	0	0	0
Alternate Dont Walk	0	0	0	0	0	0	0	0	0	0	0	0	0	0	0	0
Alternate Min Green	0	0	0	0	0	0	0	0	0	0	0	0	0	0	0	0
Dynamic Max / Max 3	0	0	0	0	0	0	0	0	0	0	0	0	0	0	0	0
Dynamic Max Adjust	0.0	0.0	0.0	0.0	0.0	0.0	0.0	0.0	0.0	0.0	0.0	0.0	0.0	0.0	0.0	0.0
Seconds / Actuation	0.0	1.5	0.0	0.0	0.0	1.5	0.0	0.0	0.0	0.0	0.0	0.0	0.0	0.0	0.0	0.0
Max Variable Initial	0	34	0	0	0	34	0	0	0	0	0	0	0	0	0	0
Time Before Reduction	0	20	0	0	0	20	0	0	0	0	0	0	0	0	0	0
Time To Reduce	0	30	0	0	0	30	0	0	0	0	0	0	0	0	0	0
Minimum Gap	0.0	3.0	0.0	0.0	0.0	3.0	0.0	0.0	0.0	0.0	0.0	0.0	0.0	0.0	0.0	0.0
Alt Flash Frequency (0-25.5 Hz)	1.0															

DocuSign Envelope ID: 5C03745C-4B01-4834-A65D-B77F558A4F46

1126 - 13-1126: NC 146/Long Shoals Road @ Schenck Pkwy / Skyland Inn Dr
3 - Phase Timing 2
5/21/2021 12:54 PM

Phase Timing Elements	Phase															
	1	2	3	4	5	6	7	8	9	10	11	12	13	14	15	16
Minimum Green 1	7	12	7	7	10	12	0	0	0	0	0	0	0	0	0	0
Minimum Green 2	0	0	0	0	0	0	0	0	0	0	0	0	0	0	0	0
Re-service Green	0	0	0	0	0	0	0	0	0	0	0	0	0	0	0	0
Extension 1 (Gap 1)	2.0	6.0	3.0	2.0	4.0	6.0	0.0	0.0	0.0	0.0	0.0	0.0	0.0	0.0	0.0	0.0
Extension 2 (Gap 2)	0.0	0.0	0.0	0.0	0.0	0.0	0.0	0.0	0.0	0.0	0.0	0.0	0.0	0.0	0.0	0.0
Maximum Green 1	20	100	45	20	45	100	0	0	0	0	0	0	0	0	0	0
Maximum Green 2	0	0	0	0	0	0	0	0	0	0	0	0	0	0	0	0
Yellow Clearance	3.1	5.1	3.5	3.0	3.0	5.1	4.0	4.0	4.0	4.0	4.0	4.0	4.0	4.0	4.0	4.0
Red Clearance	3.1	1.7	2.8	3.2	2.8	1.7	2.0	2.0	2.0	2.0	2.0	2.0	2.0	2.0	2.0	2.0
Red Revert	2.0	2.0	2.0	2.0	2.0	2.0	2.0	2.0	2.0	2.0	2.0	2.0	2.0	2.0	2.0	2.0
Walk 1	0	7	0	7	0	7	0	0	0	0	0	0	0	0	0	0
Walk 2	0	0	0	0	0	0	0	0	0	0	0	0	0	0	0	0
Dont Walk 1	0	8	0	25	0	20	0	0	0	0	0	0	0	0	0	0
Dont Walk 2	0	0	0	0	0	0	0	0	0	0	0	0	0	0	0	0
Walk Advance Time	0.0	0.0	0.0	0.0	0.0	0.0	0.0	0.0	0.0	0.0	0.0	0.0	0.0	0.0	0.0	0.0
Walk Delay Time	0.0	0.0	0.0	0.0	0.0	0.0	0.0	0.0	0.0	0.0	0.0	0.0	0.0	0.0	0.0	0.0
Alternate Walk	0	0	0	0	0	0	0	0	0	0	0	0	0	0	0	0
Alternate Dont Walk	0	0	0	0	0	0	0	0	0	0	0	0	0	0	0	0
Alternate Min Green	0	0	0	0	0	0	0	0	0	0	0	0	0	0	0	0
Dynamic Max / Max 3	0	0	0	0	0	0	0	0	0	0	0	0	0	0	0	0
Dynamic Max Adjust	0.0	0.0	0.0	0.0	0.0	0.0	0.0	0.0	0.0	0.0	0.0	0.0	0.0	0.0	0.0	0.0
Seconds / Actuation	0.0	1.5	0.0	0.0	0.0	1.5	0.0	0.0	0.0	0.0	0.0	0.0	0.0	0.0	0.0	0.0
Max Variable Initial	0	34	0	0	0	34	0	0	0	0	0	0	0	0	0	0
Time Before Reduction	0	20	0	0	0	20	0	0	0	0	0	0	0	0	0	0
Time To Reduce	0	30	0	0	0	30	0	0	0	0	0	0	0	0	0	0
Minimum Gap	0.0	3.0	0.0	0.0	0.0	3.0	0.0	0.0	0.0	0.0	0.0	0.0	0.0	0.0	0.0	0.0
Alt Flash Frequency (0-25.5 Hz)	1.0															

DocuSign Envelope ID: 5C03745C-4B01-4834-A65D-B77F558A4F46

Appendix H – NCDOT Crash Data

DocuSign Envelope ID: 5C03745C-4B01-4834-A65D-B77F558A4F46

North Carolina Department of Transportation
Traffic Engineering Accident Analysis System
Strip Analysis Report

Study Criteria Summary

County: BUNCOMBE **City:** All and Rural
Date: 1/1/2014 **to** 12/31/2018 **Study:** 41000064324MODIFIED
Location: I-26 from Bridges #100235 & 100238 (Over Pond Rd) to 2000 Ft South of NC146 (Long Shoals Rd)

Report Details

Acc No	Crash ID	Milepost	Date	Accident Type	Total Damage	Injuries F	A	B	C	Condition R	L	W	Road Ch	Ci	Trfc Ctl Dv	Op
1	**104506926**	19.690	09/24/2015 00:42	OTHER NON-COLLISION	$ 2500	0	0	0	1	1	4	1	7	0		1
Unit 1 : 4	**Alchl/Drgs:** 0	**Speed:** 55 MPH	**Dir:** E	**Veh Mnvr/Ped Actn:** 4	**Obj Strk:** 18											
2	**104541717**	19.690	10/30/2015 14:17	SIDESWIPE, SAME DIRECTION	$ 1140	0	0	0	0	1	1	1	1	0	2	1
Unit 1 : 1	**Alchl/Drgs:** 0	**Speed:** 35 MPH	**Dir:** W	**Veh Mnvr/Ped Actn:** 4	**Obj Strk:**											
Unit 2 : 2	**Alchl/Drgs:** 0	**Speed:** 60 MPH	**Dir:** W	**Veh Mnvr/Ped Actn:** 4	**Obj Strk:**											
3	**104583161**	19.690	11/18/2015 12:54	FIXED OBJECT	$ 1200	0	0	0	1	2	1	3	1	0	0	
Unit 1 : 4	**Alchl/Drgs:** 0	**Speed:** 50 MPH	**Dir:** W	**Veh Mnvr/Ped Actn:** 4	**Obj Strk:** 48											
4	**104631932**	19.690	12/30/2015 04:50	FIXED OBJECT	$ 7000	0	0	0	0	1	5	1	9	4		2
Unit 1 : 1	**Alchl/Drgs:** 7	**Speed:** 55 MPH	**Dir:** N	**Veh Mnvr/Ped Actn:** 4	**Obj Strk:** 48											
5	**104663303**	19.690	02/12/2016 20:14	RAN OFF ROAD - LEFT	$ 6012	0	0	1	2	1	5	1	1	4	0	2
Unit 1 : 1	**Alchl/Drgs:** 1	**Speed:** 75 MPH	**Dir:** S	**Veh Mnvr/Ped Actn:** 4	**Obj Strk:** 46											
6	**104671221**	19.690	02/16/2016 22:36	RAN OFF ROAD - RIGHT	$ 10200	0	0	0	1	1	4	1	7	0	0	
Unit 1 : 1	**Alchl/Drgs:** 0	**Speed:** 55 MPH	**Dir:** W	**Veh Mnvr/Ped Actn:** 4	**Obj Strk:** 48											
7	**104893701**	19.690	09/29/2016 20:34	OTHER NON-COLLISION	$ 6075	0	0	0	1	1	5	1	7	0	0	2
Unit 1 : 1	**Alchl/Drgs:** 0	**Speed:** 55 MPH	**Dir:** N	**Veh Mnvr/Ped Actn:** 16	**Obj Strk:** 46											
8	**105030704**	19.690	12/22/2016 19:32	REAR END, SLOW OR STOP	$ 2550	0	0	0	0	1	4	1	3	0	10	1
Unit 1 : 1	**Alchl/Drgs:** 0	**Speed:** 45 MPH	**Dir:** N	**Veh Mnvr/Ped Actn:** 11	**Obj Strk:**											
Unit 2 : 1	**Alchl/Drgs:** 0	**Speed:** 55 MPH	**Dir:** NE	**Veh Mnvr/Ped Actn:** 4	**Obj Strk:**											
9	**105050170**	19.690	03/12/2017 21:27	SIDESWIPE, SAME DIRECTION	$ 8500	0	0	0	0	1	5	1	1	4	0	2
Unit 1 : 32	**Alchl/Drgs:** 7	**Speed:** 50 MPH	**Dir:** N	**Veh Mnvr/Ped Actn:** 5	**Obj Strk:**											
Unit 2 : 1	**Alchl/Drgs:** 0	**Speed:** 45 MPH	**Dir:** N	**Veh Mnvr/Ped Actn:** 4	**Obj Strk:** 46											

All data presented in this report comes explicitly from the Traffic Engineering Accident Analysis System based upon va criteria provided by the report's creator. The onus is strictly upon the user of this report to exercise due diligence in in and further representing this data.

DocuSign Envelope ID: 5C03745C-4B01-4834-A65D-B77F558A4F46

North Carolina Department of Transportation
Traffic Engineering Accident Analysis System
Strip Analysis Report

Acc No	Crash ID	Milepost	Date	Accident Type	Total Damage	Injuries F	A	B	C	Condition R	L	W	Road Ch	Ci	Trfc Ctl Dv	Op
10	**105070692**	19.690	03/12/2017 21:27	SIDESWIPE, SAME DIRECTION	$ 8500	0	0	0	0	1	5	1	1	4	0	2
Unit	**1 :** 14	**Alchl/Drgs:** 7	**Speed:** 50 MPH	**Dir:** N	**Veh Mnvr/Ped Actn:** 5	**Obj Strk:**										
Unit	**2 :** 1	**Alchl/Drgs:** 0	**Speed:** 45 MPH	**Dir:** N	**Veh Mnvr/Ped Actn:** 4	**Obj Strk:** 46										
11	**105237111**	19.690	09/23/2017 20:51	FIXED OBJECT	$ 7000	0	0	0	0	2	5	3	1	1	0	1
Unit	**1 :** 1	**Alchl/Drgs:** 0	**Speed:** 60 MPH	**Dir:** E	**Veh Mnvr/Ped Actn:** 5	**Obj Strk:** 48										
12	**105345839**	19.690	12/19/2017 09:59	SIDESWIPE, SAME DIRECTION	$ 2000	0	0	0	0	1	1	1	3	0	0	
Unit	**1 :** 32	**Alchl/Drgs:** 7	**Speed:** 60 MPH	**Dir:** NW	**Veh Mnvr/Ped Actn:** 5	**Obj Strk:**										
Unit	**2 :** 1	**Alchl/Drgs:** 0	**Speed:** 60 MPH	**Dir:** NW	**Veh Mnvr/Ped Actn:** 4	**Obj Strk:**										
13	**105399315**	19.690	02/09/2018 07:45	REAR END, SLOW OR STOP	$ 8000	0	0	0	0	1	1	1	1	0		
Unit	**1 :** 4	**Alchl/Drgs:** 0	**Speed:** 50 MPH	**Dir:** E	**Veh Mnvr/Ped Actn:** 11	**Obj Strk:**										
Unit	**2 :** 4	**Alchl/Drgs:** 0	**Speed:** 20 MPH	**Dir:** E	**Veh Mnvr/Ped Actn:** 1	**Obj Strk:**										
14	**105499904**	19.690	05/23/2018 14:15	REAR END, SLOW OR STOP	$ 7000	0	0	0	0	1	1	1	1	0	0	
Unit	**1 :** 2	**Alchl/Drgs:** 0	**Speed:** 30 MPH	**Dir:** E	**Veh Mnvr/Ped Actn:** 4	**Obj Strk:**										
Unit	**2 :** 1	**Alchl/Drgs:** 0	**Speed:** 5 MPH	**Dir:** E	**Veh Mnvr/Ped Actn:** 1	**Obj Strk:**										
15	**105506978**	19.690	05/31/2018 15:14	SIDESWIPE, SAME DIRECTION	$ 2000	0	0	0	0	2	1	3	1	0	0	2
Unit	**1 :** 32	**Alchl/Drgs:** 7	**Speed:** 45 MPH	**Dir:** W	**Veh Mnvr/Ped Actn:** 5	**Obj Strk:**										
Unit	**2 :** 1	**Alchl/Drgs:** 0	**Speed:** 45 MPH	**Dir:** W	**Veh Mnvr/Ped Actn:** 4	**Obj Strk:**										
16	**105288555**	19.709	11/06/2017 20:15	REAR END, SLOW OR STOP	$ 13000	0	0	0	1	1	4	1		0		
Unit	**1 :** 14	**Alchl/Drgs:** 0	**Speed:** 0 MPH	**Dir:** E	**Veh Mnvr/Ped Actn:** 4	**Obj Strk:**										
Unit	**2 :** 5	**Alchl/Drgs:** 0	**Speed:** 0 MPH	**Dir:** E	**Veh Mnvr/Ped Actn:** 11	**Obj Strk:**										
17	**104557376**	19.728	11/02/2015 18:42	REAR END, SLOW OR STOP	$ 3100	0	0	0	0	2	4	3	5	0	9	1
Unit	**1 :** 2	**Alchl/Drgs:** 0	**Speed:** 45 MPH	**Dir:** E	**Veh Mnvr/Ped Actn:** 5	**Obj Strk:**										
Unit	**2 :** 1	**Alchl/Drgs:** 0	**Speed:** 45 MPH	**Dir:** E	**Veh Mnvr/Ped Actn:** 11	**Obj Strk:**										
Unit	**3 :** 1	**Alchl/Drgs:** 7	**Speed:** 45 MPH	**Dir:** E	**Veh Mnvr/Ped Actn:** 4	**Obj Strk:**										
18	**105295997**	19.728	11/11/2017 19:41	RAN OFF ROAD - LEFT	$ 2200	0	0	0	0	1	4	1	1	0	0	2
Unit	**1 :** 4	**Alchl/Drgs:** 0	**Speed:** 55 MPH	**Dir:** E	**Veh Mnvr/Ped Actn:** 4	**Obj Strk:** 42										

DocuSign Envelope ID: 5C03745C-4B01-4834-A65D-B77F558A4F46

North Carolina Department of Transportation
Traffic Engineering Accident Analysis System
Strip Analysis Report

Acc No	Crash ID	Milepost	Date	Accident Type	Total Damage	Injuries F	A	B	C	Condition R	L	W	Road Ch	Ci	Trfc Ctl Dv	Op
19	**104625238**	19.757	12/23/2015 20:33	FIXED OBJECT	$ 3500	0	0	0	0	2	5	3	1	1		2
Unit	**1 :** 1	**Alchl/Drgs:** 0	**Speed:** 45 MPH	**Dir:** W	**Veh Mnvr/Ped Actn:** 11	**Obj Strk:** 46										
20	**104962990**	19.757	12/30/2016 18:03	REAR END, SLOW OR STOP	$ 2500	0	0	0	0	1	5	1	1	0	0	
Unit	**1 :** 4	**Alchl/Drgs:** 0	**Speed:** 60 MPH	**Dir:** W	**Veh Mnvr/Ped Actn:** 4	**Obj Strk:**										
Unit	**2 :** 4	**Alchl/Drgs:** 0	**Speed:** 60 MPH	**Dir:** W	**Veh Mnvr/Ped Actn:** 11	**Obj Strk:**										
21	**104048150**	19.760	04/18/2014 23:41	SIDESWIPE, SAME DIRECTION	$ 3000	0	0	0	0	2	4	3	1	0		2
Unit	**1 :** 1	**Alchl/Drgs:** 0	**Speed:** 55 MPH	**Dir:** W	**Veh Mnvr/Ped Actn:** 5	**Obj Strk:**										
Unit	**2 :** 1	**Alchl/Drgs:** 0	**Speed:** 50 MPH	**Dir:** W	**Veh Mnvr/Ped Actn:** 4	**Obj Strk:**										
22	**104865185**	19.790	09/05/2016 15:51	REAR END, SLOW OR STOP	$ 5000	0	0	0	0	1	1	1	1	0	0	
Unit	**1 :** 2	**Alchl/Drgs:** 0	**Speed:** 35 MPH	**Dir:** E	**Veh Mnvr/Ped Actn:** 11	**Obj Strk:**										
Unit	**2 :** 1	**Alchl/Drgs:** 0	**Speed:** 0 MPH	**Dir:** E	**Veh Mnvr/Ped Actn:** 1	**Obj Strk:**										
23	**104977248**	19.790	01/05/2017 07:02	REAR END, SLOW OR STOP	$ 17900	0	0	0	0	1	1	2	3	0		
Unit	**1 :** 10	**Alchl/Drgs:** 0	**Speed:** 45 MPH	**Dir:** S	**Veh Mnvr/Ped Actn:** 11	**Obj Strk:**										
Unit	**2 :** 1	**Alchl/Drgs:** 0	**Speed:** 5 MPH	**Dir:** S	**Veh Mnvr/Ped Actn:** 11	**Obj Strk:**										
Unit	**3 :** 1	**Alchl/Drgs:** 0	**Speed:** 5 MPH	**Dir:** S	**Veh Mnvr/Ped Actn:** 11	**Obj Strk:**										
24	**105345528**	19.790	12/20/2017 12:27	REAR END, SLOW OR STOP	$ 8000	0	0	1	2	2	1	2	3	0	0	
Unit	**1 :** 1	**Alchl/Drgs:** 0	**Speed:** 45 MPH	**Dir:** S	**Veh Mnvr/Ped Actn:** 4	**Obj Strk:**										
Unit	**2 :** 2	**Alchl/Drgs:** 0	**Speed:** 0 MPH	**Dir:** S	**Veh Mnvr/Ped Actn:** 1	**Obj Strk:**										
25	**104651511**	19.800	02/04/2016 22:22	FIXED OBJECT	$ 1500	0	0	0	0	1	5	1	9	4		2
Unit	**1 :** 1	**Alchl/Drgs:** 0	**Speed:** 50 MPH	**Dir:** N	**Veh Mnvr/Ped Actn:** 4	**Obj Strk:** 46										
26	**105494600**	19.810	05/13/2018 22:31	SIDESWIPE, SAME DIRECTION	$ 2000	0	0	0	0	1	4	1	7	0	0	2
Unit	**1 :** 1	**Alchl/Drgs:** 0	**Speed:** 70 MPH	**Dir:** W	**Veh Mnvr/Ped Actn:** 11	**Obj Strk:**										
Unit	**2 :** 1	**Alchl/Drgs:** 0	**Speed:** 60 MPH	**Dir:** W	**Veh Mnvr/Ped Actn:** 4	**Obj Strk:**										
27	**104906548**	19.850	10/13/2016 14:01	REAR END, SLOW OR STOP	$ 5000	0	0	0	1	1	1	1	3	4		
Unit	**1 :** 1	**Alchl/Drgs:** 0	**Speed:** 55 MPH	**Dir:** E	**Veh Mnvr/Ped Actn:** 4	**Obj Strk:**										
Unit	**2 :** 1	**Alchl/Drgs:** 0	**Speed:** 0 MPH	**Dir:** E	**Veh Mnvr/Ped Actn:** 1	**Obj Strk:**										
Unit	**3 :** 2	**Alchl/Drgs:** 0	**Speed:** 20 MPH	**Dir:** E	**Veh Mnvr/Ped Actn:** 4	**Obj Strk:**										

DocuSign Envelope ID: 5C03745C-4B01-4834-A65D-B77F558A4F46

North Carolina Department of Transportation
Traffic Engineering Accident Analysis System
Strip Analysis Report

Acc No	Crash ID	Milepost	Date	Accident Type	Total Damage	Injuries F	A	B	C	Condition R	L	W	Road Ch	Ci	Trfc Ctl Dv	Op
28	**104959885**	19.890	11/24/2016 22:17	MOVABLE OBJECT	$ 1200	0	0	0	0	1	5	1	1	0		2
Unit	**1 :** 1	**Alchl/Drgs:** 0	**Speed:** 60 MPH	**Dir:** E	**Veh Mnvr/Ped Actn:** 4								**Obj Strk:** 18			
29	**105108349**	19.890	05/10/2017 09:22	MOVABLE OBJECT	$ 7000	0	0	0	0	1	1	1	1	4	0	2
Unit	**1 :** 12	**Alchl/Drgs:** 0	**Speed:** 50 MPH	**Dir:** E	**Veh Mnvr/Ped Actn:** 4								**Obj Strk:** 18			
30	**105309281**	19.890	11/22/2017 14:14	REAR END, SLOW OR STOP	$ 4250	0	0	0	0	1	1	1	3	0		
Unit	**1 :** 1	**Alchl/Drgs:** 0	**Speed:** 55 MPH	**Dir:** E	**Veh Mnvr/Ped Actn:** 11								**Obj Strk:**			
Unit	**2 :** 4	**Alchl/Drgs:** 0	**Speed:** 55 MPH	**Dir:** E	**Veh Mnvr/Ped Actn:** 11								**Obj Strk:**			
31	**105572077**	19.890	08/02/2018 14:24	SIDESWIPE, SAME DIRECTION	$ 1500	0	0	0	0	2	1	3	3	0		
Unit	**1 :** 32	**Alchl/Drgs:** 7	**Speed:** 45 MPH	**Dir:** S	**Veh Mnvr/Ped Actn:** 5								**Obj Strk:**			
Unit	**2 :** 1	**Alchl/Drgs:** 0	**Speed:** 50 MPH	**Dir:** S	**Veh Mnvr/Ped Actn:** 4								**Obj Strk:**			
32	**104107765**	19.910	07/20/2014 19:30	SIDESWIPE, SAME DIRECTION	$ 1800	0	0	0	0	1	1	1	1	0	0	
Unit	**1 :** 2	**Alchl/Drgs:** 0	**Speed:** 60 MPH	**Dir:** E	**Veh Mnvr/Ped Actn:** 4								**Obj Strk:**			
Unit	**2 :** 4	**Alchl/Drgs:** 0	**Speed:** 60 MPH	**Dir:** E	**Veh Mnvr/Ped Actn:** 4								**Obj Strk:**			
33	**104573036**	19.910	11/09/2015 05:27	FIXED OBJECT	$ 2250	0	0	0	0	2	5	2	5	4		1
Unit	**1 :** 5	**Alchl/Drgs:** 3	**Speed:** 55 MPH	**Dir:** E	**Veh Mnvr/Ped Actn:** 4								**Obj Strk:** 48			
34	**104630869**	19.910	12/25/2015 12:35	RAN OFF ROAD - RIGHT	$ 4000	0	0	0	1	2	1	2	3	0	14	1
Unit	**1 :** 1	**Alchl/Drgs:** 0	**Speed:** 50 MPH	**Dir:** N	**Veh Mnvr/Ped Actn:** 4								**Obj Strk:** 48			
35	**105694135**	19.910	11/13/2018 17:21	SIDESWIPE, SAME DIRECTION	$ 13400	0	0	0	0	1	1	2	3	0		
Unit	**1 :** 14	**Alchl/Drgs:** 0	**Speed:** 50 MPH	**Dir:** S	**Veh Mnvr/Ped Actn:** 4								**Obj Strk:**			
Unit	**2 :** 4	**Alchl/Drgs:** 0	**Speed:** 50 MPH	**Dir:** S	**Veh Mnvr/Ped Actn:** 5								**Obj Strk:** 44			
36	**104018991**	19.950	02/27/2014 15:51	OTHER NON-COLLISION	$ 1200	0	0	0	1	1	1	1		0		
Unit	**1 :** 4	**Alchl/Drgs:** 0	**Speed:** 50 MPH	**Dir:** E	**Veh Mnvr/Ped Actn:** 5								**Obj Strk:**			
Unit	**2 :** 4	**Alchl/Drgs:** 0	**Speed:** 50 MPH	**Dir:** E	**Veh Mnvr/Ped Actn:** 4								**Obj Strk:** 42			
37	**104121812**	19.950	07/22/2014 16:40	REAR END, SLOW OR STOP	$ 10000	0	0	0	0	1	1	2	1	0		2
Unit	**1 :** 1	**Alchl/Drgs:** 0	**Speed:** 55 MPH	**Dir:** E	**Veh Mnvr/Ped Actn:** 4								**Obj Strk:**			
Unit	**2 :** 1	**Alchl/Drgs:** 0	**Speed:** 45 MPH	**Dir:** E	**Veh Mnvr/Ped Actn:** 4								**Obj Strk:**			
Unit	**3 :** 1	**Alchl/Drgs:** 0	**Speed:** 45 MPH	**Dir:** E	**Veh Mnvr/Ped Actn:** 11								**Obj Strk:**			

All data presented in this report comes explicitly from the Traffic Engineering Accident Analysis System based upon va criteria provided by the report's creator. The onus is strictly upon the user of this report to exercise due diligence in in and further representing this data.

DocuSign Envelope ID: 5C03745C-4B01-4834-A65D-B77F558A4F46

North Carolina Department of Transportation
Traffic Engineering Accident Analysis System
Strip Analysis Report

Acc No	Crash ID	Milepost	Date	Accident Type	Total Damage	Injuries F	A	B	C	Condition R	L	W	Road Ch	Ci	Trfc Ctl Dv	Op
38	**104276142**	19.950	12/09/2014 17:23	ANGLE	$ 4200	0	0	0	1	1	4	2	3	0	0	2
Unit 1 : 14	**Alchl/Drgs:** 0	**Speed:** 55 MPH	**Dir:** S	**Veh Mnvr/Ped Actn:** 4	**Obj Strk:**											
Unit 2 : 4	**Alchl/Drgs:** 0	**Speed:** 60 MPH	**Dir:** S	**Veh Mnvr/Ped Actn:** 6	**Obj Strk:** 44											
39	**104417132**	19.950	06/12/2015 14:52	REAR END, SLOW OR STOP	$ 43250	0	0	0	1	2	1	3	1	0		2
Unit 1 : 20	**Alchl/Drgs:** 0	**Speed:** 20 MPH	**Dir:** N	**Veh Mnvr/Ped Actn:** 11	**Obj Strk:**											
Unit 2 : 1	**Alchl/Drgs:** 0	**Speed:** 20 MPH	**Dir:** N	**Veh Mnvr/Ped Actn:** 11	**Obj Strk:**											
Unit 3 : 1	**Alchl/Drgs:** 0	**Speed:** 20 MPH	**Dir:** N	**Veh Mnvr/Ped Actn:** 11	**Obj Strk:**											
Unit 4 : 1	**Alchl/Drgs:** 0	**Speed:** 20 MPH	**Dir:** N	**Veh Mnvr/Ped Actn:** 11	**Obj Strk:**											
40	**104443717**	19.950	07/14/2015 12:07	RAN OFF ROAD - LEFT	$ 1500	0	0	0	0	2	1	3	1	0	0	2
Unit 1 : 2	**Alchl/Drgs:** 0	**Speed:** 45 MPH	**Dir:** E	**Veh Mnvr/Ped Actn:** 4	**Obj Strk:** 59											
41	**104476589**	19.950	08/17/2015 05:23	SIDESWIPE, SAME DIRECTION	$ 2500	0	0	0	0	1	4	2	1	0	0	2
Unit 1 : 1	**Alchl/Drgs:** 7	**Speed:** 60 MPH	**Dir:** SE	**Veh Mnvr/Ped Actn:** 5	**Obj Strk:**											
Unit 2 : 1	**Alchl/Drgs:** 0	**Speed:** 60 MPH	**Dir:** SE	**Veh Mnvr/Ped Actn:** 4	**Obj Strk:**											
42	**104573095**	19.950	11/06/2015 09:31	SIDESWIPE, SAME DIRECTION	$ 1100	0	0	0	0	1	1	1	3	0		2
Unit 1 : 5	**Alchl/Drgs:** 0	**Speed:** 50 MPH	**Dir:** E	**Veh Mnvr/Ped Actn:** 5	**Obj Strk:**											
Unit 2 : 1	**Alchl/Drgs:** 0	**Speed:** 50 MPH	**Dir:** E	**Veh Mnvr/Ped Actn:** 4	**Obj Strk:**											
43	**104952480**	19.950	11/20/2016 18:30	ANIMAL	$ 3000	0	0	0	0	1	4	1	1	0		
Unit 1 : 1	**Alchl/Drgs:** 0	**Speed:** 60 MPH	**Dir:** E	**Veh Mnvr/Ped Actn:** 4	**Obj Strk:** 17											
44	**104986827**	19.950	12/13/2016 00:04	RAN OFF ROAD - LEFT	$ 10000	0	0	1	0	1	4	1	1	0		
Unit 1 : 1	**Alchl/Drgs:** 0	**Speed:** 70 MPH	**Dir:** N	**Veh Mnvr/Ped Actn:** 4	**Obj Strk:** 41											
45	**105150587**	19.950	06/25/2017 15:29	MOVABLE OBJECT	$ 1000	0	0	0	0	1	1	1	5	0	0	
Unit 1 : 1	**Alchl/Drgs:** 0	**Speed:** 55 MPH	**Dir:** E	**Veh Mnvr/Ped Actn:** 4	**Obj Strk:** 18											
46	**105183813**	19.950	07/20/2017 17:14	REAR END, SLOW OR STOP	$ 7500	0	0	0	0	1	1	1	1	0	0	2
Unit 1 : 1	**Alchl/Drgs:** 0	**Speed:** 30 MPH	**Dir:** E	**Veh Mnvr/Ped Actn:** 4	**Obj Strk:**											
Unit 2 : 4	**Alchl/Drgs:** 0	**Speed:** 0 MPH	**Dir:** E	**Veh Mnvr/Ped Actn:** 1	**Obj Strk:**											
Unit 3 : 4	**Alchl/Drgs:** 0	**Speed:** 0 MPH	**Dir:** E	**Veh Mnvr/Ped Actn:** 1	**Obj Strk:**											

DocuSign Envelope ID: 5C03745C-4B01-4834-A65D-B77F558A4F46

North Carolina Department of Transportation
Traffic Engineering Accident Analysis System
Strip Analysis Report

Acc No	Crash ID	Milepost	Date	Accident Type	Total Damage	Injuries F	A	B	C	Condition R	L	W	Road Ch	Ci	Trfc Ctl Dv	Op
47	**105185630**	19.950	07/22/2017 12:40	REAR END, SLOW OR STOP	$ 1850	0	0	0	0	1	1	1	1	0		
Unit	**1 :** 4	**Alchl/Drgs:**	0	**Speed:** 50 MPH	**Dir:** E	**Veh Mnvr/Ped Actn:**			4			**Obj Strk:**				
Unit	**2 :** 5	**Alchl/Drgs:**	0	**Speed:** 0 MPH	**Dir:** E	**Veh Mnvr/Ped Actn:**			1			**Obj Strk:**				
48	**105338071**	19.950	12/16/2017 12:59	REAR END, SLOW OR STOP	$ 2000	0	0	0	0	1	1	1	1	0	0	2
Unit	**1 :** 20	**Alchl/Drgs:**	0	**Speed:** 55 MPH	**Dir:** E	**Veh Mnvr/Ped Actn:**			4			**Obj Strk:**				
Unit	**2 :** 4	**Alchl/Drgs:**	0	**Speed:** 0 MPH	**Dir:** E	**Veh Mnvr/Ped Actn:**			1			**Obj Strk:**				
49	**105487205**	19.950	05/03/2018 07:18	REAR END, SLOW OR STOP	$ 2000	0	0	0	0	1	1	1	1	0	0	
Unit	**1 :** 14	**Alchl/Drgs:**	0	**Speed:** 50 MPH	**Dir:** E	**Veh Mnvr/Ped Actn:**			5			**Obj Strk:**				
Unit	**2 :** 1	**Alchl/Drgs:**	0	**Speed:** 50 MPH	**Dir:** E	**Veh Mnvr/Ped Actn:**			4			**Obj Strk:**				
50	**105666881**	19.950	10/17/2018 11:14	FIXED OBJECT	$ 3500	0	0	0	0	1	1	1	1	0	0	2
Unit	**1 :** 4	**Alchl/Drgs:**	0	**Speed:** 60 MPH	**Dir:** E	**Veh Mnvr/Ped Actn:**			11			**Obj Strk:**			44	
51	**105664705**	19.950	10/26/2018 05:10	SIDESWIPE, SAME DIRECTION	$ 1000	0	0	0	0	2	5	3	7	4		2
Unit	**1 :** 32	**Alchl/Drgs:**	7	**Speed:** 50 MPH	**Dir:** E	**Veh Mnvr/Ped Actn:**			4			**Obj Strk:**				
Unit	**2 :** 1	**Alchl/Drgs:**	0	**Speed:** 50 MPH	**Dir:** E	**Veh Mnvr/Ped Actn:**			4			**Obj Strk:**			44	
52	**104628907**	19.990	01/09/2016 17:25	REAR END, SLOW OR STOP	$ 1500	0	0	0	0	2	4	3	3	0	0	2
Unit	**1 :** 32	**Alchl/Drgs:**	7	**Speed:** 45 MPH	**Dir:** W	**Veh Mnvr/Ped Actn:**			11			**Obj Strk:**				
Unit	**2 :** 1	**Alchl/Drgs:**	0	**Speed:** 45 MPH	**Dir:** W	**Veh Mnvr/Ped Actn:**			11			**Obj Strk:**				
53	**105056870**	19.990	03/24/2017 07:22	REAR END, SLOW OR STOP	$ 4000	0	0	0	0	1	1	1	1	0	0	2
Unit	**1 :** 1	**Alchl/Drgs:**	0	**Speed:** 35 MPH	**Dir:** E	**Veh Mnvr/Ped Actn:**			4			**Obj Strk:**				
Unit	**2 :** 2	**Alchl/Drgs:**	0	**Speed:** 35 MPH	**Dir:** E	**Veh Mnvr/Ped Actn:**			11			**Obj Strk:**				
54	**104039300**	20.010	04/09/2014 07:47	REAR END, SLOW OR STOP	$ 1000	0	0	0	1	1	1	2	1	0		
Unit	**1 :** 1	**Alchl/Drgs:**	0	**Speed:** 35 MPH	**Dir:** E	**Veh Mnvr/Ped Actn:**			4			**Obj Strk:**				
Unit	**2 :** 1	**Alchl/Drgs:**	0	**Speed:** 35 MPH	**Dir:** E	**Veh Mnvr/Ped Actn:**			11			**Obj Strk:**				
Unit	**3 :** 2	**Alchl/Drgs:**	0	**Speed:** 35 MPH	**Dir:** E	**Veh Mnvr/Ped Actn:**			11			**Obj Strk:**				
55	**104300749**	20.010	01/28/2015 08:17	OVERTURN/ROLLOVER	$ 117000	1	0	0	0	1	1	1	1	0	0	
Unit	**1 :** 10	**Alchl/Drgs:**	0	**Speed:** 55 MPH	**Dir:** N	**Veh Mnvr/Ped Actn:**			4			**Obj Strk:**			44	

All data presented in this report comes explicitly from the Traffic Engineering Accident Analysis System based upon va criteria provided by the report's creator. The onus is strictly upon the user of this report to exercise due diligence in in and further representing this data.

DocuSign Envelope ID: 5C03745C-4B01-4834-A65D-B77F558A4F46

North Carolina Department of Transportation
Traffic Engineering Accident Analysis System
Strip Analysis Report

Acc No	Crash ID	Milepost	Date	Accident Type	Total Damage	Injuries F	A	B	C	Condition R	L	W	Road Ch	Ci	Trfc Ctl Dv	Op
56	**104427996**	20.010	06/29/2015 07:45	REAR END, SLOW OR STOP	$ 3000	0	0	0	0	1	1	1	1	0		2
Unit	**1 :** 14	**Alchl/Drgs:** 0	**Speed:** 50 MPH	**Dir:** W	**Veh Mnvr/Ped Actn:** 4					**Obj Strk:**						
Unit	**2 :** 1	**Alchl/Drgs:** 0	**Speed:** 50 MPH	**Dir:** W	**Veh Mnvr/Ped Actn:** 4					**Obj Strk:**						
57	**104470018**	20.010	08/08/2015 20:52	OTHER COLLISION WITH VEHICLE	$ 1000	0	0	0	0	1	4	1	7	0	14	1
Unit	**1 :** 12	**Alchl/Drgs:** 0	**Speed:** 60 MPH	**Dir:** W	**Veh Mnvr/Ped Actn:** 4					**Obj Strk:**						
Unit	**2 :** 1	**Alchl/Drgs:** 0	**Speed:** 60 MPH	**Dir:** W	**Veh Mnvr/Ped Actn:** 4					**Obj Strk:**						
58	**104475440**	20.010	08/19/2015 18:24	SIDESWIPE, SAME DIRECTION	$ 1000	0	0	0	0	1	1	1	5	0	0	1
Unit	**1 :** 1	**Alchl/Drgs:** 0	**Speed:** 50 MPH	**Dir:** E	**Veh Mnvr/Ped Actn:** 4					**Obj Strk:**						
Unit	**2 :** 4	**Alchl/Drgs:** 0	**Speed:** 50 MPH	**Dir:** E	**Veh Mnvr/Ped Actn:** 4					**Obj Strk:**						
59	**104563158**	20.010	11/03/2015 17:52	REAR END, SLOW OR STOP	$ 4600	0	0	0	0	1	2	1	1	0	0	2
Unit	**1 :** 1	**Alchl/Drgs:** 0	**Speed:** 45 MPH	**Dir:** W	**Veh Mnvr/Ped Actn:** 4					**Obj Strk:**						
Unit	**2 :** 1	**Alchl/Drgs:** 0	**Speed:** 45 MPH	**Dir:** W	**Veh Mnvr/Ped Actn:** 11					**Obj Strk:**						
60	**104986965**	20.010	12/13/2016 00:40	MOVABLE OBJECT	$ 1000	0	0	0	0	1	4	1	1	0		
Unit	**1 :** 1	**Alchl/Drgs:** 0	**Speed:** 50 MPH	**Dir:** W	**Veh Mnvr/Ped Actn:** 4					**Obj Strk:**			18			
61	**105074382**	20.010	04/10/2017 09:55	SIDESWIPE, SAME DIRECTION	$ 1350	0	0	0	0	1	1	1	1	0		
Unit	**1 :** 4	**Alchl/Drgs:** 0	**Speed:** 50 MPH	**Dir:** W	**Veh Mnvr/Ped Actn:** 4					**Obj Strk:**						
Unit	**2 :** 1	**Alchl/Drgs:** 0	**Speed:** 50 MPH	**Dir:** W	**Veh Mnvr/Ped Actn:** 4					**Obj Strk:**						
62	**105137320**	20.010	06/08/2017 17:50	REAR END, SLOW OR STOP	$ 3300	0	0	0	0	1	1	1	1	0	0	1
Unit	**1 :** 1	**Alchl/Drgs:** 0	**Speed:** 10 MPH	**Dir:** E	**Veh Mnvr/Ped Actn:** 4					**Obj Strk:**						
Unit	**2 :** 2	**Alchl/Drgs:** 0	**Speed:** 0 MPH	**Dir:** E	**Veh Mnvr/Ped Actn:** 4					**Obj Strk:**						
63	**105430866**	20.010	03/09/2018 14:12	REAR END, SLOW OR STOP	$ 8000	0	0	0	0	1	1	1	1	0	0	2
Unit	**1 :** 2	**Alchl/Drgs:** 0	**Speed:** 45 MPH	**Dir:** W	**Veh Mnvr/Ped Actn:** 4					**Obj Strk:**						
Unit	**2 :** 1	**Alchl/Drgs:** 0	**Speed:** 0 MPH	**Dir:** W	**Veh Mnvr/Ped Actn:** 1					**Obj Strk:**						
64	**105493400**	20.010	05/17/2018 12:21	SIDESWIPE, SAME DIRECTION	$ 1700	0	0	0	0	1	1	2	1	0	0	
Unit	**1 :** 14	**Alchl/Drgs:** 0	**Speed:** 20 MPH	**Dir:** W	**Veh Mnvr/Ped Actn:** 5					**Obj Strk:**						
Unit	**2 :** 1	**Alchl/Drgs:** 0	**Speed:** 60 MPH	**Dir:** W	**Veh Mnvr/Ped Actn:** 4					**Obj Strk:**						

DocuSign Envelope ID: 5C03745C-4B01-4834-A65D-B77F558A4F46

North Carolina Department of Transportation
Traffic Engineering Accident Analysis System
Strip Analysis Report

Acc No	Crash ID	Milepost	Date	Accident Type	Total Damage	Injuries F	A	B	C	Condition R	L	W	Road Ch	Ci	Trfc Ctl Dv	Op
65	**105530802**	20.010	06/27/2018 07:54	REAR END, SLOW OR STOP	$ 25	0	0	0	1	1	1	1	1	0	0	
Unit 1 : 4	**Alchl/Drgs:** 0	**Speed:** 3 MPH	**Dir:** W	**Veh Mnvr/Ped Actn:** 4	**Obj Strk:**											
Unit 2 : 1	**Alchl/Drgs:** 0	**Speed:** 0 MPH	**Dir:** W	**Veh Mnvr/Ped Actn:** 1	**Obj Strk:**											
66	**104983657**	20.138	12/27/2016 17:09	SIDESWIPE, SAME DIRECTION	$ 1001	0	0	0	0	2	1	3	1	0	0	2
Unit 1 : 32	**Alchl/Drgs:** 7	**Speed:** 60 MPH	**Dir:** W	**Veh Mnvr/Ped Actn:** 4	**Obj Strk:**											
Unit 2 : 2	**Alchl/Drgs:** 0	**Speed:** 60 MPH	**Dir:** W	**Veh Mnvr/Ped Actn:** 16	**Obj Strk:**											
67	**104531550**	20.210	10/10/2015 16:52	REAR END, SLOW OR STOP	$ 2000	0	0	0	0	2	1	3	3	0		2
Unit 1 : 1	**Alchl/Drgs:** 0	**Speed:** 45 MPH	**Dir:** W	**Veh Mnvr/Ped Actn:** 4	**Obj Strk:**											
Unit 2 : 1	**Alchl/Drgs:** 0	**Speed:** 45 MPH	**Dir:** W	**Veh Mnvr/Ped Actn:** 4	**Obj Strk:**											
68	**104712722**	20.210	03/31/2016 11:03	SIDESWIPE, SAME DIRECTION	$ 2500	0	0	0	0	1	1	2	1	0	0	1
Unit 1 : 25	**Alchl/Drgs:** 0	**Speed:** 40 MPH	**Dir:** W	**Veh Mnvr/Ped Actn:** 5	**Obj Strk:**											
Unit 2 : 2	**Alchl/Drgs:** 0	**Speed:** 40 MPH	**Dir:** W	**Veh Mnvr/Ped Actn:** 4	**Obj Strk:**											
69	**105094255**	20.210	04/30/2017 07:58	RAN OFF ROAD - RIGHT	$ 2000	0	0	0	0	1	1	2	1	0	0	2
Unit 1 : 1	**Alchl/Drgs:** 0	**Speed:** 55 MPH	**Dir:** W	**Veh Mnvr/Ped Actn:** 4	**Obj Strk:** 42											
70	**105337995**	20.210	12/16/2017 09:42	REAR END, SLOW OR STOP	$ 15000	0	0	0	2	1	1	1	1	0	0	2
Unit 1 : 14	**Alchl/Drgs:** 0	**Speed:** 45 MPH	**Dir:** W	**Veh Mnvr/Ped Actn:** 4	**Obj Strk:**											
Unit 2 : 1	**Alchl/Drgs:** 0	**Speed:** 0 MPH	**Dir:** W	**Veh Mnvr/Ped Actn:** 1	**Obj Strk:**											
71	**105733979**	20.240	12/11/2018 16:11	SIDESWIPE, SAME DIRECTION	$ 2800	0	0	0	0	1	1	1	3	0	0	
Unit 1 : 4	**Alchl/Drgs:** 0	**Speed:** 60 MPH	**Dir:** N	**Veh Mnvr/Ped Actn:** 5	**Obj Strk:**											
Unit 2 : 4	**Alchl/Drgs:** 0	**Speed:** 60 MPH	**Dir:** N	**Veh Mnvr/Ped Actn:** 4	**Obj Strk:**											
72	**104961412**	20.245	12/29/2016 11:57	SIDESWIPE, SAME DIRECTION	$ 2000	0	0	0	0	1	1	1	2	0	0	
Unit 1 : 4	**Alchl/Drgs:** 0	**Speed:** 60 MPH	**Dir:** S	**Veh Mnvr/Ped Actn:** 4	**Obj Strk:**											
Unit 2 : 1	**Alchl/Drgs:** 7	**Speed:** 60 MPH	**Dir:** S	**Veh Mnvr/Ped Actn:** 5	**Obj Strk:**											
73	**105104507**	20.245	05/17/2017 23:56	REAR END, SLOW OR STOP	$ 5600	0	0	0	1	1	1	2	3	0	0	
Unit 1 : 14	**Alchl/Drgs:** 0	**Speed:** 45 MPH	**Dir:** W	**Veh Mnvr/Ped Actn:** 4	**Obj Strk:**											
Unit 2 : 1	**Alchl/Drgs:** 0	**Speed:** 35 MPH	**Dir:** W	**Veh Mnvr/Ped Actn:** 5	**Obj Strk:**											
Unit 3 : 3	**Alchl/Drgs:** 0	**Speed:** 15 MPH	**Dir:** W	**Veh Mnvr/Ped Actn:** 1	**Obj Strk:**											

DocuSign Envelope ID: 5C03745C-4B01-4834-A65D-B77F558A4F46

North Carolina Department of Transportation
Traffic Engineering Accident Analysis System
Strip Analysis Report

Acc No	Crash ID	Milepost	Date	Accident Type	Total Damage	Injuries F	A	B	C	Condition R	L	W	Road Ch	Ci	Trfc Ctl Dv	Op
74	**105337139**	20.245	12/13/2017 14:39	SIDESWIPE, SAME DIRECTION	$ 2500	0	0	0	0	1	1	1	1	0		
Unit	**1 :** 32	**Alchl/Drgs:** 7	**Speed:** 55 MPH	**Dir:** W	**Veh Mnvr/Ped Actn:** 4	**Obj Strk:**										
Unit	**2 :** 1	**Alchl/Drgs:** 0	**Speed:** 50 MPH	**Dir:** W	**Veh Mnvr/Ped Actn:** 5	**Obj Strk:**										
75	**104323990**	20.257	03/12/2015 13:03	SIDESWIPE, SAME DIRECTION	$ 3100	0	0	0	0	1	1	1	1	0	0	
Unit	**1 :** 10	**Alchl/Drgs:** 0	**Speed:** 55 MPH	**Dir:** NW	**Veh Mnvr/Ped Actn:** 4	**Obj Strk:**										
Unit	**2 :** 1	**Alchl/Drgs:** 0	**Speed:** 60 MPH	**Dir:** NW	**Veh Mnvr/Ped Actn:** 5	**Obj Strk:**										
76	**104491977**	20.257	09/18/2015 10:20	SIDESWIPE, SAME DIRECTION	$ 3000	0	0	0	0	1	1	1	5	0	0	
Unit	**1 :** 11	**Alchl/Drgs:** 0	**Speed:** 55 MPH	**Dir:** E	**Veh Mnvr/Ped Actn:** 4	**Obj Strk:**										
Unit	**2 :** 1	**Alchl/Drgs:** 7	**Speed:** 55 MPH	**Dir:** E	**Veh Mnvr/Ped Actn:** 4	**Obj Strk:**										
77	**105050994**	20.257	03/18/2017 06:55	SIDESWIPE, SAME DIRECTION	$ 500	0	0	0	0	2	1	3	1	0	0	2
Unit	**1 :** 2	**Alchl/Drgs:** 0	**Speed:** 55 MPH	**Dir:** W	**Veh Mnvr/Ped Actn:** 4	**Obj Strk:**										
Unit	**2 :** 2	**Alchl/Drgs:** 0	**Speed:** 55 MPH	**Dir:** W	**Veh Mnvr/Ped Actn:** 4	**Obj Strk:**										
78	**105442337**	20.257	03/24/2018 17:43	REAR END, SLOW OR STOP	$ 500	0	0	0	0	2	1	3	1	0	0	
Unit	**1 :** 4	**Alchl/Drgs:** 0	**Speed:** 45 MPH	**Dir:** W	**Veh Mnvr/Ped Actn:** 4	**Obj Strk:**										
Unit	**2 :** 5	**Alchl/Drgs:** 0	**Speed:** 45 MPH	**Dir:** W	**Veh Mnvr/Ped Actn:** 11	**Obj Strk:**										
79	**105674168**	20.257	11/04/2018 15:15	REAR END, SLOW OR STOP	$ 2500	0	0	0	0	1	1	1	1	0		
Unit	**1 :** 1	**Alchl/Drgs:** 0	**Speed:** 25 MPH	**Dir:** E	**Veh Mnvr/Ped Actn:** 11	**Obj Strk:**										
Unit	**2 :** 1	**Alchl/Drgs:** 0	**Speed:** 20 MPH	**Dir:** E	**Veh Mnvr/Ped Actn:** 11	**Obj Strk:**										
80	**104509268**	20.260	09/14/2015 11:51	SIDESWIPE, SAME DIRECTION	$ 2000	0	0	0	0	1	1	1	1	0	0	
Unit	**1 :** 14	**Alchl/Drgs:** 0	**Speed:** 60 MPH	**Dir:** W	**Veh Mnvr/Ped Actn:** 4	**Obj Strk:**										
Unit	**2 :** 14	**Alchl/Drgs:** 0	**Speed:** 60 MPH	**Dir:** W	**Veh Mnvr/Ped Actn:** 4	**Obj Strk:**										
81	**105100855**	20.260	05/09/2017 08:00	REAR END, SLOW OR STOP	$ 1000	0	0	0	0	1	1	1	1	0	0	
Unit	**1 :** 16	**Alchl/Drgs:** 0	**Speed:** 35 MPH	**Dir:** W	**Veh Mnvr/Ped Actn:** 4	**Obj Strk:**										
Unit	**2 :** 1	**Alchl/Drgs:** 0	**Speed:** 0 MPH	**Dir:** W	**Veh Mnvr/Ped Actn:** 1	**Obj Strk:**										
82	**105118886**	20.260	05/22/2017 14:20	SIDESWIPE, SAME DIRECTION	$ 1000	0	0	0	0	1	1	1	1	0	0	
Unit	**1 :** 7	**Alchl/Drgs:** 0	**Speed:** 40 MPH	**Dir:** W	**Veh Mnvr/Ped Actn:** 5	**Obj Strk:**										
Unit	**2 :** 4	**Alchl/Drgs:** 0	**Speed:** 40 MPH	**Dir:** W	**Veh Mnvr/Ped Actn:** 4	**Obj Strk:**										

DocuSign Envelope ID: 5C03745C-4B01-4834-A65D-B77F558A4F46

North Carolina Department of Transportation
Traffic Engineering Accident Analysis System
Strip Analysis Report

Acc No	Crash ID	Milepost	Date	Accident Type	Total Damage	Injuries F	A	B	C	Condition R	L	W	Road Ch	Ci	Trfc Ctl Dv	Op
83	**105220040**	20.260	09/01/2017 13:36	SIDESWIPE, SAME DIRECTION	$ 1500	0	0	0	0	2	1	3	1	0	0	
Unit	**1 :** 4	**Alchl/Drgs:**	0	**Speed:** 50 MPH	**Dir:** W	**Veh Mnvr/Ped Actn:**			5			**Obj Strk:**				
Unit	**2 :** 4	**Alchl/Drgs:**	0	**Speed:** 50 MPH	**Dir:** W	**Veh Mnvr/Ped Actn:**			4			**Obj Strk:**				
84	**104855806**	20.283	08/24/2016 19:33	SIDESWIPE, SAME DIRECTION	$ 5200	0	0	0	0	1	1	1	1	0		1
Unit	**1 :** 14	**Alchl/Drgs:**	0	**Speed:** 55 MPH	**Dir:** W	**Veh Mnvr/Ped Actn:**			4			**Obj Strk:**				
Unit	**2 :** 1	**Alchl/Drgs:**	1	**Speed:** 55 MPH	**Dir:** W	**Veh Mnvr/Ped Actn:**			5			**Obj Strk:**				
85	**103953765**	20.310	01/13/2014 12:29	OTHER NON-COLLISION	$ 1100	0	0	0	0	1	1	2	1	0	0	
Unit	**1 :** 11	**Alchl/Drgs:**	0	**Speed:** 55 MPH	**Dir:** SE	**Veh Mnvr/Ped Actn:**			4			**Obj Strk:**				
Unit	**2 :** 1	**Alchl/Drgs:**	0	**Speed:** 55 MPH	**Dir:** SE	**Veh Mnvr/Ped Actn:**			4			**Obj Strk:**				
86	**104027579**	20.310	03/25/2014 22:19	RAN OFF ROAD - LEFT	$ 3000	0	0	0	0	4	4	4	5	0	0	
Unit	**1 :** 1	**Alchl/Drgs:**	0	**Speed:** 65 MPH	**Dir:** E	**Veh Mnvr/Ped Actn:**			4			**Obj Strk:**			38	
87	**104316015**	20.310	02/19/2015 20:18	SIDESWIPE, SAME DIRECTION	$ 10000	0	0	0	0	1	4	1	7	0	0	
Unit	**1 :** 12	**Alchl/Drgs:**	0	**Speed:** 55 MPH	**Dir:** N	**Veh Mnvr/Ped Actn:**			5			**Obj Strk:**				
Unit	**2 :** 1	**Alchl/Drgs:**	0	**Speed:** 55 MPH	**Dir:** N	**Veh Mnvr/Ped Actn:**			4			**Obj Strk:**				
88	**104356125**	20.310	04/22/2015 16:48	REAR END, SLOW OR STOP	$ 4000	0	0	0	0	1	1	1	3	0	0	
Unit	**1 :** 4	**Alchl/Drgs:**	0	**Speed:** 45 MPH	**Dir:** E	**Veh Mnvr/Ped Actn:**			4			**Obj Strk:**				
Unit	**2 :** 4	**Alchl/Drgs:**	0	**Speed:** 45 MPH	**Dir:** E	**Veh Mnvr/Ped Actn:**			1			**Obj Strk:**				
89	**104765022**	20.310	05/31/2016 13:38	REAR END, SLOW OR STOP	$ 1000	0	0	0	0	1	1	1	3	0	10	1
Unit	**1 :** 2	**Alchl/Drgs:**	7	**Speed:** 60 MPH	**Dir:** W	**Veh Mnvr/Ped Actn:**			4			**Obj Strk:**				
Unit	**2 :** 1	**Alchl/Drgs:**	0	**Speed:** 55 MPH	**Dir:** W	**Veh Mnvr/Ped Actn:**			4			**Obj Strk:**				
90	**105307449**	20.310	11/23/2017 16:37	REAR END, SLOW OR STOP	$ 7000	0	0	0	0	1	1	1	1	0	0	
Unit	**1 :** 4	**Alchl/Drgs:**	0	**Speed:** 60 MPH	**Dir:** E	**Veh Mnvr/Ped Actn:**			4			**Obj Strk:**				
Unit	**2 :** 4	**Alchl/Drgs:**	0	**Speed:** 60 MPH	**Dir:** E	**Veh Mnvr/Ped Actn:**			11			**Obj Strk:**				
91	**105577777**	20.310	08/12/2018 07:17	SIDESWIPE, SAME DIRECTION	$ 3500	0	0	0	0	1	1	1	1	0	0	
Unit	**1 :** 1	**Alchl/Drgs:**	0	**Speed:** 50 MPH	**Dir:** E	**Veh Mnvr/Ped Actn:**			5			**Obj Strk:**				
Unit	**2 :** 1	**Alchl/Drgs:**	0	**Speed:** 55 MPH	**Dir:** E	**Veh Mnvr/Ped Actn:**			4			**Obj Strk:**				

DocuSign Envelope ID: 5C03745C-4B01-4834-A65D-B77F558A4F46

North Carolina Department of Transportation
Traffic Engineering Accident Analysis System
Strip Analysis Report

Acc No	Crash ID	Milepost	Date	Accident Type	Total Damage	Injuries F	A	B	C	Condition R	L	W	Road Ch	Ci	Trfc Ctl Dv	Op
92	**104504678**	20.379	09/16/2015 21:01	REAR END, SLOW OR STOP	$ 4000	0	0	0	0	1	4	1	1	0	0	2
Unit	**1 :** 5	**Alchl/Drgs:** 0	**Speed:** 45 MPH	**Dir:** W	**Veh Mnvr/Ped Actn:** 4	**Obj Strk:**										
Unit	**2 :** 5	**Alchl/Drgs:** 0	**Speed:** 45 MPH	**Dir:** W	**Veh Mnvr/Ped Actn:** 4	**Obj Strk:**										
93	**104018845**	20.388	03/17/2014 07:51	REAR END, SLOW OR STOP	$ 2100	0	0	0	0	2	1	2		0		
Unit	**1 :** 1	**Alchl/Drgs:** 0	**Speed:** 60 MPH	**Dir:** NW	**Veh Mnvr/Ped Actn:** 4	**Obj Strk:**										
Unit	**2 :** 1	**Alchl/Drgs:** 0	**Speed:** 60 MPH	**Dir:** NW	**Veh Mnvr/Ped Actn:** 11	**Obj Strk:**										
94	**105363040**	20.390	01/04/2018 16:00	REAR END, SLOW OR STOP	$ 6000	0	0	0	0	4	1	4	1	1	0	
Unit	**1 :** 4	**Alchl/Drgs:** 0	**Speed:** 50 MPH	**Dir:** W	**Veh Mnvr/Ped Actn:** 11	**Obj Strk:**										
Unit	**2 :** 4	**Alchl/Drgs:** 0	**Speed:** 40 MPH	**Dir:** W	**Veh Mnvr/Ped Actn:** 11	**Obj Strk:**										
95	**104035329**	20.410	03/26/2014 18:43	REAR END, SLOW OR STOP	$ 4000	0	0	0	0	1	1	1	3	0	0	
Unit	**1 :** 10	**Alchl/Drgs:** 0	**Speed:** 55 MPH	**Dir:** W	**Veh Mnvr/Ped Actn:** 5	**Obj Strk:**										
Unit	**2 :** 1	**Alchl/Drgs:** 0	**Speed:** 25 MPH	**Dir:** W	**Veh Mnvr/Ped Actn:** 5	**Obj Strk:**										
96	**104104401**	20.410	05/30/2014 17:08	SIDESWIPE, SAME DIRECTION	$ 6100	0	0	0	0	1	1	1	1	0	0	
Unit	**1 :** 13	**Alchl/Drgs:** 0	**Speed:** 60 MPH	**Dir:** NW	**Veh Mnvr/Ped Actn:** 5	**Obj Strk:**										
Unit	**2 :** 11	**Alchl/Drgs:** 0	**Speed:** 60 MPH	**Dir:** N	**Veh Mnvr/Ped Actn:** 4	**Obj Strk:** 42										
97	**104429010**	20.410	06/29/2015 17:27	REAR END, SLOW OR STOP	$ 1500	0	0	0	0	1	1	1	3	0		1
Unit	**1 :** 4	**Alchl/Drgs:** 0	**Speed:** 50 MPH	**Dir:** W	**Veh Mnvr/Ped Actn:** 11	**Obj Strk:**										
Unit	**2 :** 2	**Alchl/Drgs:** 0	**Speed:** 50 MPH	**Dir:** W	**Veh Mnvr/Ped Actn:** 11	**Obj Strk:**										
98	**104469344**	20.410	08/09/2015 20:56	REAR END, SLOW OR STOP	$ 1000	0	0	0	0	1	5	1	1	0	10	1
Unit	**1 :** 1	**Alchl/Drgs:** 0	**Speed:** 50 MPH	**Dir:** W	**Veh Mnvr/Ped Actn:** 4	**Obj Strk:**										
Unit	**2 :** 25	**Alchl/Drgs:** 0	**Speed:** 50 MPH	**Dir:** W	**Veh Mnvr/Ped Actn:** 11	**Obj Strk:**										
99	**104659095**	20.410	02/10/2016 07:08	FIXED OBJECT	$ 20900	0	0	0	0	1	1	1	7	0		
Unit	**1 :** 15	**Alchl/Drgs:** 0	**Speed:** 50 MPH	**Dir:** W	**Veh Mnvr/Ped Actn:** 16	**Obj Strk:** 62										
100	**104837071**	20.410	04/27/2016 10:47	SIDESWIPE, SAME DIRECTION	$ 3750	0	0	0	1	1	1	1	5	0	0	1
Unit	**1 :** 14	**Alchl/Drgs:** 0	**Speed:** 50 MPH	**Dir:** W	**Veh Mnvr/Ped Actn:** 4	**Obj Strk:**										
Unit	**2 :** 4	**Alchl/Drgs:** 0	**Speed:** 65 MPH	**Dir:** W	**Veh Mnvr/Ped Actn:** 4	**Obj Strk:** 62										

DocuSign Envelope ID: 5C03745C-4B01-4834-A65D-B77F558A4F46

North Carolina Department of Transportation
Traffic Engineering Accident Analysis System
Strip Analysis Report

Acc No	Crash ID	Milepost	Date	Accident Type	Total Damage	Injuries F	A	B	C	Condition R	L	W	Road Ch	Ci	Trfc Ctl Dv	Op
101	**104814479**	20.410	07/13/2016 10:35	SIDESWIPE, SAME DIRECTION	$ 3400	0	0	0	0	1	1	1	8	0	0	
Unit	**1 :** 5	**Alchl/Drgs:** 0	**Speed:** 50 MPH	**Dir:** W	**Veh Mnvr/Ped Actn:** 5	**Obj Strk:**										
Unit	**2 :** 1	**Alchl/Drgs:** 0	**Speed:** 50 MPH	**Dir:** W	**Veh Mnvr/Ped Actn:** 4	**Obj Strk:**										
102	**105026525**	20.410	02/17/2017 08:14	REAR END, SLOW OR STOP	$ 2600	0	0	0	0	1	1	1	1	0		2
Unit	**1 :** 1	**Alchl/Drgs:** 0	**Speed:** 55 MPH	**Dir:** W	**Veh Mnvr/Ped Actn:** 4	**Obj Strk:**										
Unit	**2 :** 4	**Alchl/Drgs:** 0	**Speed:** 50 MPH	**Dir:** W	**Veh Mnvr/Ped Actn:** 11	**Obj Strk:**										
103	**105309283**	20.410	11/22/2017 20:23	SIDESWIPE, SAME DIRECTION	$ 1500	0	0	0	0	1	4	1	1	0		2
Unit	**1 :** 32	**Alchl/Drgs:** 7	**Speed:** 60 MPH	**Dir:** W	**Veh Mnvr/Ped Actn:** 4	**Obj Strk:**										
Unit	**2 :** 1	**Alchl/Drgs:** 0	**Speed:** 60 MPH	**Dir:** W	**Veh Mnvr/Ped Actn:** 4	**Obj Strk:**										
104	**105573877**	20.410	08/05/2018 14:37	REAR END, SLOW OR STOP	$ 7500	0	0	0	0	1	1	1	1	0	0	2
Unit	**1 :** 4	**Alchl/Drgs:** 0	**Speed:** 60 MPH	**Dir:** W	**Veh Mnvr/Ped Actn:** 4	**Obj Strk:**										
Unit	**2 :** 4	**Alchl/Drgs:** 0	**Speed:** 40 MPH	**Dir:** W	**Veh Mnvr/Ped Actn:** 11	**Obj Strk:**										
105	**104475473**	20.434	08/21/2015 16:16	REAR END, SLOW OR STOP	$ 3500	0	0	0	1	1	1	1	1	0		2
Unit	**1 :** 1	**Alchl/Drgs:** 0	**Speed:** 15 MPH	**Dir:** E	**Veh Mnvr/Ped Actn:** 11	**Obj Strk:**										
Unit	**2 :** 1	**Alchl/Drgs:** 0	**Speed:** 0 MPH	**Dir:** E	**Veh Mnvr/Ped Actn:** 11	**Obj Strk:**										
106	**104662823**	20.434	11/29/2015 14:48	REAR END, SLOW OR STOP	$ 7400	0	0	0	0	2	1	3	1	0	0	1
Unit	**1 :** 1	**Alchl/Drgs:** 0	**Speed:** 25 MPH	**Dir:** S	**Veh Mnvr/Ped Actn:** 4	**Obj Strk:**										
Unit	**2 :** 1	**Alchl/Drgs:** 0	**Speed:** 10 MPH	**Dir:** S	**Veh Mnvr/Ped Actn:** 4	**Obj Strk:**										
Unit	**3 :** 1	**Alchl/Drgs:** 0	**Speed:** 5 MPH	**Dir:** S	**Veh Mnvr/Ped Actn:** 4	**Obj Strk:**										
107	**105050159**	20.434	03/15/2017 18:15	REAR END, SLOW OR STOP	$ 1300	0	0	0	0	1	2	1	1	0	0	2
Unit	**1 :** 1	**Alchl/Drgs:** 7	**Speed:** 45 MPH	**Dir:** W	**Veh Mnvr/Ped Actn:** 4	**Obj Strk:**										
Unit	**2 :** 1	**Alchl/Drgs:** 0	**Speed:** 45 MPH	**Dir:** W	**Veh Mnvr/Ped Actn:** 11	**Obj Strk:**										
108	**105159346**	20.444	06/27/2017 21:39	REAR END, SLOW OR STOP	$ 2000	0	0	0	0	1	5	1	1	0	0	
Unit	**1 :** 4	**Alchl/Drgs:** 0	**Speed:** 40 MPH	**Dir:** W	**Veh Mnvr/Ped Actn:** 11	**Obj Strk:**										
Unit	**2 :** 4	**Alchl/Drgs:** 0	**Speed:** 30 MPH	**Dir:** W	**Veh Mnvr/Ped Actn:** 11	**Obj Strk:**										
109	**104175096**	20.450	09/24/2014 17:27	SIDESWIPE, SAME DIRECTION	$ 3000	0	0	0	0	1	1	1	1	0	0	2
Unit	**1 :** 10	**Alchl/Drgs:** 0	**Speed:** 30 MPH	**Dir:** E	**Veh Mnvr/Ped Actn:** 5	**Obj Strk:**										
Unit	**2 :** 1	**Alchl/Drgs:** 0	**Speed:** 30 MPH	**Dir:** E	**Veh Mnvr/Ped Actn:** 4	**Obj Strk:**										

DocuSign Envelope ID: 5C03745C-4B01-4834-A65D-B77F558A4F46

North Carolina Department of Transportation
Traffic Engineering Accident Analysis System
Strip Analysis Report

Acc No	Crash ID	Milepost	Date	Accident Type	Total Damage	Injuries F	A	B	C	Condition R	L	W	Road Ch	Ci	Trfc Ctl Dv	Op
110	**104665621**	20.450	02/21/2016 16:38	REAR END, SLOW OR STOP	$ 3600	0	0	1	0	2	1	3	1	0	0	
Unit	**1 :** 4	**Alchl/Drgs:** 0	**Speed:** 50 MPH	**Dir:** E	**Veh Mnvr/Ped Actn:** 4	**Obj Strk:**										
Unit	**2 :** 4	**Alchl/Drgs:** 0	**Speed:** 0 MPH	**Dir:** E	**Veh Mnvr/Ped Actn:** 1	**Obj Strk:**										
111	**105288409**	20.450	11/07/2017 07:25	RAN OFF ROAD - LEFT	$ 1300	0	0	0	1	2	1	3		0		
Unit	**1 :** 1	**Alchl/Drgs:** 0	**Speed:** 0 MPH	**Dir:** E	**Veh Mnvr/Ped Actn:** 4	**Obj Strk:** 46										
112	**104199124**	20.453	10/10/2014 18:53	REAR END, SLOW OR STOP	$ 6000	0	0	0	1	2	4	1	1	0	0	
Unit	**1 :** 1	**Alchl/Drgs:** 0	**Speed:** 55 MPH	**Dir:** W	**Veh Mnvr/Ped Actn:** 4	**Obj Strk:**										
Unit	**2 :** 1	**Alchl/Drgs:** 0	**Speed:** 20 MPH	**Dir:** W	**Veh Mnvr/Ped Actn:** 11	**Obj Strk:**										
113	**105280988**	20.453	10/27/2017 19:40	SIDESWIPE, SAME DIRECTION	$ 1800	0	0	0	0	1	4	1	3	0	0	2
Unit	**1 :** 4	**Alchl/Drgs:** 0	**Speed:** 45 MPH	**Dir:** W	**Veh Mnvr/Ped Actn:** 4	**Obj Strk:**										
Unit	**2 :** 1	**Alchl/Drgs:** 0	**Speed:** 55 MPH	**Dir:** W	**Veh Mnvr/Ped Actn:** 4	**Obj Strk:**										
114	**104148096**	20.460	07/24/2014 10:16	ANGLE	$ 8500	0	0	0	2	1	1	1	1	0		1
Unit	**1 :** 14	**Alchl/Drgs:** 0	**Speed:** 60 MPH	**Dir:** E	**Veh Mnvr/Ped Actn:** 4	**Obj Strk:**										
Unit	**2 :** 4	**Alchl/Drgs:** 0	**Speed:** 60 MPH	**Dir:** E	**Veh Mnvr/Ped Actn:** 4	**Obj Strk:**										
115	**104409765**	20.465	06/09/2015 23:56	SIDESWIPE, SAME DIRECTION	$ 1300	0	0	0	0	1	4	1	1	0	2	1
Unit	**1 :** 14	**Alchl/Drgs:** 0	**Speed:** 60 MPH	**Dir:** W	**Veh Mnvr/Ped Actn:** 4	**Obj Strk:**										
Unit	**2 :** 5	**Alchl/Drgs:** 0	**Speed:** 60 MPH	**Dir:** W	**Veh Mnvr/Ped Actn:** 5	**Obj Strk:**										
116	**104443688**	20.465	07/17/2015 14:03	SIDESWIPE, SAME DIRECTION	$ 1100	0	0	0	0	1	1	1	1	0		2
Unit	**1 :** 4	**Alchl/Drgs:** 0	**Speed:** 50 MPH	**Dir:** W	**Veh Mnvr/Ped Actn:** 5	**Obj Strk:**										
Unit	**2 :** 1	**Alchl/Drgs:** 0	**Speed:** 55 MPH	**Dir:** W	**Veh Mnvr/Ped Actn:** 4	**Obj Strk:**										
117	**104412833**	20.470	06/07/2015 16:51	REAR END, SLOW OR STOP	$ 400	0	0	0	1	2	1	2	2	0	0	2
Unit	**1 :** 4	**Alchl/Drgs:** 0	**Speed:** 55 MPH	**Dir:** E	**Veh Mnvr/Ped Actn:** 4	**Obj Strk:**										
Unit	**2 :** 1	**Alchl/Drgs:** 0	**Speed:** 35 MPH	**Dir:** E	**Veh Mnvr/Ped Actn:** 4	**Obj Strk:**										
Unit	**3 :** 1	**Alchl/Drgs:** 0	**Speed:** 25 MPH	**Dir:** E	**Veh Mnvr/Ped Actn:** 4	**Obj Strk:**										
118	**104443693**	20.470	07/18/2015 08:44	REAR END, SLOW OR STOP	$ 6300	0	0	0	0	1	1	1	1	0	0	2
Unit	**1 :** 1	**Alchl/Drgs:** 0	**Speed:** 60 MPH	**Dir:** E	**Veh Mnvr/Ped Actn:** 4	**Obj Strk:**										
Unit	**2 :** 1	**Alchl/Drgs:** 0	**Speed:** 60 MPH	**Dir:** E	**Veh Mnvr/Ped Actn:** 4	**Obj Strk:**										
Unit	**3 :** 1	**Alchl/Drgs:** 0	**Speed:** 55 MPH	**Dir:** E	**Veh Mnvr/Ped Actn:** 4	**Obj Strk:**										

DocuSign Envelope ID: 5C03745C-4B01-4834-A65D-B77F558A4F46

North Carolina Department of Transportation
Traffic Engineering Accident Analysis System
Strip Analysis Report

Acc No	Crash ID	Milepost	Date	Accident Type	Total Damage	Injuries F	A	B	C	Condition R	L	W	Road Ch	Ci	Trfc Ctl Dv	Op
119	**104531339**	20.470	10/12/2015 12:56	REAR END, SLOW OR STOP	$ 3000	0	0	0	0	1	1	1	1	0		
Unit 1 : 32	**Alchl/Drgs:** 7	**Speed:** 35 MPH	**Dir:** E	**Veh Mnvr/Ped Actn:** 4	**Obj Strk:**											
Unit 2 : 2	**Alchl/Drgs:** 0	**Speed:** 0 MPH	**Dir:** E	**Veh Mnvr/Ped Actn:** 1	**Obj Strk:**											
Unit 3 : 4	**Alchl/Drgs:** 0	**Speed:** 0 MPH	**Dir:** E	**Veh Mnvr/Ped Actn:** 1	**Obj Strk:**											
Unit 4 : 5	**Alchl/Drgs:** 0	**Speed:** 0 MPH	**Dir:** E	**Veh Mnvr/Ped Actn:** 1	**Obj Strk:**											
120	**104671863**	20.470	02/25/2016 14:44	REAR END, SLOW OR STOP	$ 2500	0	0	0	1	1	1	1	1	0		
Unit 1 : 4	**Alchl/Drgs:** 0	**Speed:** 55 MPH	**Dir:** E	**Veh Mnvr/Ped Actn:** 4	**Obj Strk:**											
Unit 2 : 2	**Alchl/Drgs:** 0	**Speed:** 0 MPH	**Dir:** E	**Veh Mnvr/Ped Actn:** 1	**Obj Strk:**											
Unit 3 : 4	**Alchl/Drgs:** 0	**Speed:** 0 MPH	**Dir:** E	**Veh Mnvr/Ped Actn:** 1	**Obj Strk:**											
121	**104679942**	20.470	02/27/2016 10:59	ANGLE	$ 2200	0	0	0	1	1	1	1	1	0		
Unit 1 : 1	**Alchl/Drgs:** 0	**Speed:** 50 MPH	**Dir:** E	**Veh Mnvr/Ped Actn:** 5	**Obj Strk:**										44	
Unit 2 : 1	**Alchl/Drgs:** 0	**Speed:** 50 MPH	**Dir:** E	**Veh Mnvr/Ped Actn:** 4	**Obj Strk:**											
122	**105073313**	20.470	04/10/2017 14:56	SIDESWIPE, SAME DIRECTION	$ 1100	0	0	0	0	1	1	1	1	0		
Unit 1 : 2	**Alchl/Drgs:** 0	**Speed:** 50 MPH	**Dir:** W	**Veh Mnvr/Ped Actn:** 4	**Obj Strk:**											
Unit 2 : 1	**Alchl/Drgs:** 0	**Speed:** 50 MPH	**Dir:** W	**Veh Mnvr/Ped Actn:** 4	**Obj Strk:**											
123	**104694383**	20.472	03/13/2016 17:02	REAR END, SLOW OR STOP	$ 1000	0	0	0	0	1	1	2	1	0	0	1
Unit 1 : 32	**Alchl/Drgs:** 7	**Speed:** 55 MPH	**Dir:** N	**Veh Mnvr/Ped Actn:** 4	**Obj Strk:**											
Unit 2 : 4	**Alchl/Drgs:** 0	**Speed:** 35 MPH	**Dir:** N	**Veh Mnvr/Ped Actn:** 11	**Obj Strk:**											
124	**104269047**	20.474	12/23/2014 18:40	REAR END, SLOW OR STOP	$ 1500	0	0	0	0	2	4	3	1	0		2
Unit 1 : 1	**Alchl/Drgs:** 0	**Speed:** 25 MPH	**Dir:** SE	**Veh Mnvr/Ped Actn:** 4	**Obj Strk:**											
Unit 2 : 1	**Alchl/Drgs:** 0	**Speed:** 25 MPH	**Dir:** SE	**Veh Mnvr/Ped Actn:** 4	**Obj Strk:**											
Unit 3 : 1	**Alchl/Drgs:** 0	**Speed:** 0 MPH	**Dir:** SE	**Veh Mnvr/Ped Actn:** 1	**Obj Strk:**											
125	**104622251**	20.491	12/16/2015 17:22	REAR END, SLOW OR STOP	$ 6500	0	0	0	0	1	4	1	1	0		1
Unit 1 : 1	**Alchl/Drgs:** 0	**Speed:** 30 MPH	**Dir:** N	**Veh Mnvr/Ped Actn:** 11	**Obj Strk:**											
Unit 2 : 1	**Alchl/Drgs:** 0	**Speed:** 0 MPH	**Dir:** N	**Veh Mnvr/Ped Actn:** 1	**Obj Strk:**											
Unit 3 : 1	**Alchl/Drgs:** 0	**Speed:** 0 MPH	**Dir:** N	**Veh Mnvr/Ped Actn:** 1	**Obj Strk:**											
126	**104263590**	20.500	12/19/2014 18:33	REAR END, SLOW OR STOP	$ 1500	0	0	0	0	1	5	1	3	0		2
Unit 1 : 1	**Alchl/Drgs:** 0	**Speed:** 20 MPH	**Dir:** E	**Veh Mnvr/Ped Actn:** 11	**Obj Strk:**											
Unit 2 : 1	**Alchl/Drgs:** 0	**Speed:** 15 MPH	**Dir:** E	**Veh Mnvr/Ped Actn:** 11	**Obj Strk:**											
Unit 3 : 1	**Alchl/Drgs:** 0	**Speed:** 15 MPH	**Dir:** E	**Veh Mnvr/Ped Actn:** 11	**Obj Strk:**											

DocuSign Envelope ID: 5C03745C-4B01-4834-A65D-B77F558A4F46

North Carolina Department of Transportation
Traffic Engineering Accident Analysis System
Strip Analysis Report

Acc No	Crash ID	Milepost	Date	Accident Type	Total Damage	Injuries F	A	B	C	Condition R	L	W	Road Ch	Ci	Trfc Ctl Dv	Op
127	**104213918**	20.501	11/01/2014 08:22	RAN OFF ROAD - RIGHT	$ 2000	0	0	0	0	2	1	4	1	0		2
Unit	**1 :** 1	**Alchl/Drgs:** 0	**Speed:** 55 MPH	**Dir:** W	**Veh Mnvr/Ped Actn:** 4	**Obj Strk:** 59										
128	**104322637**	20.501	03/07/2015 11:03	SIDESWIPE, SAME DIRECTION	$ 300	0	0	0	1	1	1	1	1	0	0	
Unit	**1 :** 32	**Alchl/Drgs:** 7	**Speed:** 60 MPH	**Dir:** W	**Veh Mnvr/Ped Actn:** 4	**Obj Strk:**										
Unit	**2 :** 1	**Alchl/Drgs:** 0	**Speed:** 60 MPH	**Dir:** W	**Veh Mnvr/Ped Actn:** 4	**Obj Strk:**										
129	**104622248**	20.501	12/16/2015 17:22	REAR END, SLOW OR STOP	$ 10000	0	0	1	0	1	4	1	1	0	0	1
Unit	**1 :** 12	**Alchl/Drgs:** 0	**Speed:** 55 MPH	**Dir:** N	**Veh Mnvr/Ped Actn:** 11	**Obj Strk:**										
Unit	**2 :** 1	**Alchl/Drgs:** 0	**Speed:** 0 MPH	**Dir:** N	**Veh Mnvr/Ped Actn:** 1	**Obj Strk:**										
130	**104199126**	20.510	10/10/2014 19:39	REAR END, SLOW OR STOP	$ 1250	0	0	0	0	2	4	2	3	0	1	1
Unit	**1 :** 1	**Alchl/Drgs:** 0	**Speed:** 20 MPH	**Dir:** E	**Veh Mnvr/Ped Actn:** 4	**Obj Strk:**										
Unit	**2 :** 1	**Alchl/Drgs:** 0	**Speed:** 0 MPH	**Dir:** E	**Veh Mnvr/Ped Actn:** 1	**Obj Strk:**										
131	**104379473**	20.510	05/02/2015 18:36	ANGLE	$ 4500	0	0	0	1	1	1	1	3	0		
Unit	**1 :** 14	**Alchl/Drgs:** 0	**Speed:** 55 MPH	**Dir:** SE	**Veh Mnvr/Ped Actn:** 4	**Obj Strk:**										
Unit	**2 :** 1	**Alchl/Drgs:** 0	**Speed:** 65 MPH	**Dir:** SE	**Veh Mnvr/Ped Actn:** 5	**Obj Strk:**										
132	**104387470**	20.510	05/08/2015 08:37	ANGLE	$ 4200	0	0	0	0	1	1	1	1	0	0	2
Unit	**1 :** 4	**Alchl/Drgs:** 0	**Speed:** 45 MPH	**Dir:** E	**Veh Mnvr/Ped Actn:** 16	**Obj Strk:** 42										
Unit	**2 :** 1	**Alchl/Drgs:** 0	**Speed:** 0 MPH	**Dir:** E	**Veh Mnvr/Ped Actn:** 11	**Obj Strk:**										
133	**104387489**	20.510	05/09/2015 08:37	FIXED OBJECT	$ 2700	0	0	0	0	1	1	1	1	0	0	2
Unit	**1 :** 2	**Alchl/Drgs:** 0	**Speed:** 40 MPH	**Dir:** E	**Veh Mnvr/Ped Actn:** 4	**Obj Strk:** 42										
134	**104401135**	20.510	05/26/2015 15:52	SIDESWIPE, SAME DIRECTION	$ 500	0	0	0	0	1	1	1	1	0	2	
Unit	**1 :** 12	**Alchl/Drgs:** 0	**Speed:** 50 MPH	**Dir:** W	**Veh Mnvr/Ped Actn:** 4	**Obj Strk:**										
Unit	**2 :** 32	**Alchl/Drgs:** 7	**Speed:** 0 MPH	**Dir:** W	**Veh Mnvr/Ped Actn:** 4	**Obj Strk:** 18										
135	**104503191**	20.510	09/16/2015 21:53	REAR END, SLOW OR STOP	$ 1750	0	0	0	0	1	4	1	1	0	0	1
Unit	**1 :** 1	**Alchl/Drgs:** 0	**Speed:** 35 MPH	**Dir:** W	**Veh Mnvr/Ped Actn:** 4	**Obj Strk:**										
Unit	**2 :** 2	**Alchl/Drgs:** 0	**Speed:** 10 MPH	**Dir:** W	**Veh Mnvr/Ped Actn:** 11	**Obj Strk:**										
136	**104509312**	20.510	09/20/2015 20:21	REAR END, SLOW OR STOP	$ 7000	0	0	2	0	1	4	1	2	0	0	
Unit	**1 :** 4	**Alchl/Drgs:** 0	**Speed:** 60 MPH	**Dir:** NW	**Veh Mnvr/Ped Actn:** 4	**Obj Strk:**										

All data presented in this report comes explicitly from the Traffic Engineering Accident Analysis System based upon va criteria provided by the report's creator. The onus is strictly upon the user of this report to exercise due diligence in in and further representing this data.

DocuSign Envelope ID: 5C03745C-4B01-4834-A65D-B77F558A4F46

North Carolina Department of Transportation
Traffic Engineering Accident Analysis System
Strip Analysis Report

Acc No	Crash ID	Milepost	Date	Accident Type	Total Damage	Injuries F	A	B	C	Condition R	L	W	Road Ch	Ci	Trfc Ctl Dv	Op
Unit	**2 :** 1	**Alchl/Drgs:**	0	**Speed:** 35 MPH	**Dir:** NW	**Veh Mnvr/Ped Actn:**					11		**Obj Strk:**			
137	**104562612**	20.510	10/19/2015 16:46	REAR END, SLOW OR STOP	$ 2500	0	0	0	0	1	1	1	3	0		
Unit	**1 :** 2	**Alchl/Drgs:**	0	**Speed:** 45 MPH	**Dir:** W	**Veh Mnvr/Ped Actn:**					11		**Obj Strk:**			
Unit	**2 :** 2	**Alchl/Drgs:**	0	**Speed:** 45 MPH	**Dir:** W	**Veh Mnvr/Ped Actn:**					11		**Obj Strk:**			
138	**104573105**	20.510	11/09/2015 17:54	REAR END, SLOW OR STOP	$ 1500	0	0	0	0	2	4	3	3	0	0	
Unit	**1 :** 1	**Alchl/Drgs:**	0	**Speed:** 20 MPH	**Dir:** SE	**Veh Mnvr/Ped Actn:**					4		**Obj Strk:**			
Unit	**2 :** 1	**Alchl/Drgs:**	0	**Speed:** 5 MPH	**Dir:** SE	**Veh Mnvr/Ped Actn:**					11		**Obj Strk:**			
139	**104573104**	20.510	11/09/2015 18:00	REAR END, SLOW OR STOP	$ 5	0	0	0	0	2	4	3	3	0	0	
Unit	**1 :** 32	**Alchl/Drgs:**	7	**Speed:** 10 MPH	**Dir:** SE	**Veh Mnvr/Ped Actn:**					4		**Obj Strk:**			
Unit	**2 :** 1	**Alchl/Drgs:**	0	**Speed:** 5 MPH	**Dir:** SE	**Veh Mnvr/Ped Actn:**					11		**Obj Strk:**			
140	**104644636**	20.510	01/24/2016 09:50	OVERTURN/ROLLOVER	$ 8000	0	0	0	1	6	1	1	7	0		
Unit	**1 :** 2	**Alchl/Drgs:**	0	**Speed:** 50 MPH	**Dir:** W	**Veh Mnvr/Ped Actn:**					4		**Obj Strk:**		62	
141	**104719431**	20.510	03/17/2016 17:57	REAR END, SLOW OR STOP	$ 1000	0	0	0	0	1	1	1	3	0	0	1
Unit	**1 :** 1	**Alchl/Drgs:**	0	**Speed:** 20 MPH	**Dir:** E	**Veh Mnvr/Ped Actn:**					11		**Obj Strk:**			
Unit	**2 :** 4	**Alchl/Drgs:**	0	**Speed:** 0 MPH	**Dir:** E	**Veh Mnvr/Ped Actn:**					1		**Obj Strk:**			
142	**104422250**	20.520	06/28/2015 19:38	REAR END, SLOW OR STOP	$ 1400	0	0	0	1	1	1	1	1	0	0	
Unit	**1 :** 4	**Alchl/Drgs:**	0	**Speed:** 65 MPH	**Dir:** W	**Veh Mnvr/Ped Actn:**					11		**Obj Strk:**			
Unit	**2 :** 1	**Alchl/Drgs:**	0	**Speed:** 60 MPH	**Dir:** W	**Veh Mnvr/Ped Actn:**					11		**Obj Strk:**			
143	**104015765**	20.529	02/27/2014 07:48	REAR END, SLOW OR STOP	$ 3800	0	0	0	0	1	1	1	1	0		
Unit	**1 :** 1	**Alchl/Drgs:**	0	**Speed:** 55 MPH	**Dir:** S	**Veh Mnvr/Ped Actn:**					4		**Obj Strk:**			
Unit	**2 :** 10	**Alchl/Drgs:**	0	**Speed:** 55 MPH	**Dir:** S	**Veh Mnvr/Ped Actn:**					11		**Obj Strk:**			
144	**104332499**	20.529	02/13/2015 17:49	SIDESWIPE, SAME DIRECTION	$ 1200	0	0	0	0	1	1	1	1	0	0	
Unit	**1 :** 4	**Alchl/Drgs:**	0	**Speed:** 45 MPH	**Dir:** E	**Veh Mnvr/Ped Actn:**					4		**Obj Strk:**			
Unit	**2 :** 1	**Alchl/Drgs:**	0	**Speed:** 45 MPH	**Dir:** E	**Veh Mnvr/Ped Actn:**					4		**Obj Strk:**			
145	**104343347**	20.529	03/20/2015 09:38	REAR END, SLOW OR STOP	$ 1600	0	0	0	0	1	1	2	3	0	0	1
Unit	**1 :** 1	**Alchl/Drgs:**	0	**Speed:** 15 MPH	**Dir:** W	**Veh Mnvr/Ped Actn:**					11		**Obj Strk:**			
Unit	**2 :** 1	**Alchl/Drgs:**	0	**Speed:** 10 MPH	**Dir:** W	**Veh Mnvr/Ped Actn:**					11		**Obj Strk:**			
Unit	**3 :** 1	**Alchl/Drgs:**	0	**Speed:** 5 MPH	**Dir:** W	**Veh Mnvr/Ped Actn:**					11		**Obj Strk:**			

DocuSign Envelope ID: 5C03745C-4B01-4834-A65D-B77F558A4F46

North Carolina Department of Transportation
Traffic Engineering Accident Analysis System
Strip Analysis Report

Acc No	Crash ID	Milepost	Date	Accident Type	Total Damage	Injuries F	A	B	C	Condition R	L	W	Road Ch	Ci	Trfc Ctl Dv	Op
146	**104546567**	20.533	10/20/2015 08:34	REAR END, SLOW OR STOP	$ 16000	0	0	3	0	1	1	1	1	0	0	
Unit	**1 :** 1	**Alchl/Drgs:** 0	**Speed:** 60 MPH	**Dir:** S	**Veh Mnvr/Ped Actn:** 4	**Obj Strk:**										
Unit	**2 :** 3	**Alchl/Drgs:** 0	**Speed:** 0 MPH	**Dir:** S	**Veh Mnvr/Ped Actn:** 1	**Obj Strk:**										
Unit	**3 :** 4	**Alchl/Drgs:** 0	**Speed:** 0 MPH	**Dir:** S	**Veh Mnvr/Ped Actn:** 1	**Obj Strk:**										
147	**104112868**	20.540	07/18/2014 10:46	REAR END, SLOW OR STOP	$ 5100	0	0	0	0	2	1	3	1	0	0	
Unit	**1 :** 1	**Alchl/Drgs:** 0	**Speed:** 45 MPH	**Dir:** N	**Veh Mnvr/Ped Actn:** 4	**Obj Strk:**										
Unit	**2 :** 2	**Alchl/Drgs:** 0	**Speed:** 35 MPH	**Dir:** N	**Veh Mnvr/Ped Actn:** 11	**Obj Strk:**										
148	**104123520**	20.548	06/26/2014 17:00	REAR END, SLOW OR STOP	$ 4000	0	0	0	0	1	1	1	3	0	0	1
Unit	**1 :** 1	**Alchl/Drgs:** 0	**Speed:** 60 MPH	**Dir:** SE	**Veh Mnvr/Ped Actn:** 4	**Obj Strk:**										
Unit	**2 :** 16	**Alchl/Drgs:** 0	**Speed:** 60 MPH	**Dir:** SE	**Veh Mnvr/Ped Actn:** 11	**Obj Strk:**										
149	**104746685**	20.548	05/05/2016 17:52	REAR END, SLOW OR STOP	$ 6200	0	0	0	1	1	1	1	1	0	0	1
Unit	**1 :** 1	**Alchl/Drgs:** 0	**Speed:** 45 MPH	**Dir:** SE	**Veh Mnvr/Ped Actn:** 4	**Obj Strk:**										
Unit	**2 :** 1	**Alchl/Drgs:** 0	**Speed:** 0 MPH	**Dir:** S	**Veh Mnvr/Ped Actn:** 4	**Obj Strk:**										
Unit	**3 :** 1	**Alchl/Drgs:** 0	**Speed:** 0 MPH	**Dir:** S	**Veh Mnvr/Ped Actn:** 4	**Obj Strk:**										
150	**104837487**	20.548	09/02/2016 07:33	REAR END, SLOW OR STOP	$ 1800	0	0	0	0	1	1	2	1	0	0	
Unit	**1 :** 2	**Alchl/Drgs:** 0	**Speed:** 40 MPH	**Dir:** S	**Veh Mnvr/Ped Actn:** 4	**Obj Strk:**										
Unit	**2 :** 1	**Alchl/Drgs:** 0	**Speed:** 40 MPH	**Dir:** S	**Veh Mnvr/Ped Actn:** 11	**Obj Strk:**										
151	**105162275**	20.595	05/26/2017 17:23	REAR END, SLOW OR STOP	$ 4300	0	0	0	0	1	1	1	1	0	0	2
Unit	**1 :** 4	**Alchl/Drgs:** 0	**Speed:** 40 MPH	**Dir:** E	**Veh Mnvr/Ped Actn:** 4	**Obj Strk:**										
Unit	**2 :** 1	**Alchl/Drgs:** 0	**Speed:** 35 MPH	**Dir:** E	**Veh Mnvr/Ped Actn:** 4	**Obj Strk:**										
Unit	**3 :** 1	**Alchl/Drgs:** 0	**Speed:** 15 MPH	**Dir:** E	**Veh Mnvr/Ped Actn:** 11	**Obj Strk:**										
Unit	**4 :** 1	**Alchl/Drgs:** 0	**Speed:** 40 MPH	**Dir:** E	**Veh Mnvr/Ped Actn:** 11	**Obj Strk:**										
152	**104505649**	20.605	10/01/2015 09:29	REAR END, SLOW OR STOP	$ 2500	0	0	0	0	1	1	2	1	0	0	
Unit	**1 :** 4	**Alchl/Drgs:** 0	**Speed:** 30 MPH	**Dir:** S	**Veh Mnvr/Ped Actn:** 4	**Obj Strk:**										
Unit	**2 :** 4	**Alchl/Drgs:** 0	**Speed:** 30 MPH	**Dir:** S	**Veh Mnvr/Ped Actn:** 1	**Obj Strk:**										
153	**104099413**	20.610	07/05/2014 12:47	REAR END, SLOW OR STOP	$ 4500	0	0	0	1	1	1	1	3	0	0	
Unit	**1 :** 4	**Alchl/Drgs:** 0	**Speed:** 55 MPH	**Dir:** W	**Veh Mnvr/Ped Actn:** 4	**Obj Strk:**										
Unit	**2 :** 4	**Alchl/Drgs:** 0	**Speed:** 55 MPH	**Dir:** W	**Veh Mnvr/Ped Actn:** 11	**Obj Strk:**										

DocuSign Envelope ID: 5C03745C-4B01-4834-A65D-B77F558A4F46

North Carolina Department of Transportation
Traffic Engineering Accident Analysis System
Strip Analysis Report

Acc No	Crash ID	Milepost	Date	Accident Type	Total Damage	Injuries F	A	B	C	Condition R	L	W	Road Ch	Ci	Trfc Ctl Dv	Op
154	**104162500**	20.610	09/11/2014 01:36	RAN OFF ROAD - LEFT	$ 6500	0	0	0	0	1	4	1	5	0	0	
Unit	**1 :** 1	**Alchl/Drgs:** 7	**Speed:** 80 MPH	**Dir:** SE	**Veh Mnvr/Ped Actn:** 4	**Obj Strk:** 44										
155	**104223913**	20.610	11/17/2014 09:25	REAR END, SLOW OR STOP	$ 6850	0	0	1	1	2	1	3	1	0	0	
Unit	**1 :** 13	**Alchl/Drgs:** 0	**Speed:** 50 MPH	**Dir:** W	**Veh Mnvr/Ped Actn:** 4	**Obj Strk:**										
Unit	**2 :** 1	**Alchl/Drgs:** 0	**Speed:** 50 MPH	**Dir:** W	**Veh Mnvr/Ped Actn:** 5	**Obj Strk:**										
Unit	**3 :** 32	**Alchl/Drgs:** 7	**Speed:** 55 MPH	**Dir:** W	**Veh Mnvr/Ped Actn:** 11	**Obj Strk:**										
156	**104413210**	20.610	06/05/2015 17:04	REAR END, SLOW OR STOP	$ 4000	0	0	0	1	1	1	1	3	0	0	2
Unit	**1 :** 1	**Alchl/Drgs:** 0	**Speed:** 20 MPH	**Dir:** S	**Veh Mnvr/Ped Actn:** 4	**Obj Strk:**										
Unit	**2 :** 4	**Alchl/Drgs:** 0	**Speed:** 0 MPH	**Dir:** S	**Veh Mnvr/Ped Actn:** 11	**Obj Strk:**										
Unit	**3 :** 4	**Alchl/Drgs:** 7	**Speed:** 0 MPH	**Dir:** S	**Veh Mnvr/Ped Actn:** 11	**Obj Strk:**										
157	**104411092**	20.610	06/05/2015 17:59	REAR END, SLOW OR STOP	$ 2000	0	0	0	0	1	1	1	1	0	0	1
Unit	**1 :** 1	**Alchl/Drgs:** 0	**Speed:** 30 MPH	**Dir:** E	**Veh Mnvr/Ped Actn:** 4	**Obj Strk:**										
Unit	**2 :** 2	**Alchl/Drgs:** 0	**Speed:** 0 MPH	**Dir:** E	**Veh Mnvr/Ped Actn:** 1	**Obj Strk:**										
158	**104587053**	20.610	11/24/2015 17:48	REAR END, SLOW OR STOP	$ 2000	0	0	0	0	1	5	1	1	0		
Unit	**1 :** 1	**Alchl/Drgs:** 0	**Speed:** 15 MPH	**Dir:** E	**Veh Mnvr/Ped Actn:** 11	**Obj Strk:**										
Unit	**2 :** 1	**Alchl/Drgs:** 0	**Speed:** 10 MPH	**Dir:** E	**Veh Mnvr/Ped Actn:** 11	**Obj Strk:**										
159	**104590522**	20.610	12/15/2015 08:33	OVERTURN/ROLLOVER	$ 3400	0	0	1	0	1	1	1	3	0	0	
Unit	**1 :** 20	**Alchl/Drgs:** 0	**Speed:** 50 MPH	**Dir:** W	**Veh Mnvr/Ped Actn:** 4	**Obj Strk:**										
160	**104847295**	20.610	09/10/2016 20:17	REAR END, SLOW OR STOP	$ 5000	0	0	1	1	1	2	1	3	0	0	
Unit	**1 :** 2	**Alchl/Drgs:** 0	**Speed:** 50 MPH	**Dir:** E	**Veh Mnvr/Ped Actn:** 4	**Obj Strk:**										
Unit	**2 :** 2	**Alchl/Drgs:** 0	**Speed:** 50 MPH	**Dir:** E	**Veh Mnvr/Ped Actn:** 1	**Obj Strk:**										
161	**104906915**	20.610	10/21/2016 12:58	SIDESWIPE, SAME DIRECTION	$ 3500	0	0	0	0	2	1	2	1	0	2	1
Unit	**1 :** 14	**Alchl/Drgs:** 0	**Speed:** 20 MPH	**Dir:** E	**Veh Mnvr/Ped Actn:** 4	**Obj Strk:**										
Unit	**2 :** 4	**Alchl/Drgs:** 0	**Speed:** 20 MPH	**Dir:** S	**Veh Mnvr/Ped Actn:** 5	**Obj Strk:**										
162	**104922638**	20.610	11/21/2016 18:52	REAR END, SLOW OR STOP	$ 2700	0	0	0	1	1	4	1	3	0	0	
Unit	**1 :** 4	**Alchl/Drgs:** 0	**Speed:** 60 MPH	**Dir:** E	**Veh Mnvr/Ped Actn:** 11	**Obj Strk:**										
Unit	**2 :** 1	**Alchl/Drgs:** 0	**Speed:** 60 MPH	**Dir:** E	**Veh Mnvr/Ped Actn:** 11	**Obj Strk:**										

All data presented in this report comes explicitly from the Traffic Engineering Accident Analysis System based upon va criteria provided by the report's creator. The onus is strictly upon the user of this report to exercise due diligence in in and further representing this data.

DocuSign Envelope ID: 5C03745C-4B01-4834-A65D-B77F558A4F46

North Carolina Department of Transportation
Traffic Engineering Accident Analysis System
Strip Analysis Report

Acc No	Crash ID	Milepost	Date	Accident Type	Total Damage	Injuries F	A	B	C	Condition R	L	W	Road Ch	Ci	Trfc Ctl Dv	Op
163	**105101314**	20.610	05/16/2017 07:34	REAR END, SLOW OR STOP	$ 4700	0	0	0	0	1	1	1	1	0	0	
Unit	**1 :** 1	**Alchl/Drgs:** 0	**Speed:** 60 MPH	**Dir:** S	**Veh Mnvr/Ped Actn:** 4	**Obj Strk:**										
Unit	**2 :** 1	**Alchl/Drgs:** 0	**Speed:** 60 MPH	**Dir:** S	**Veh Mnvr/Ped Actn:** 11	**Obj Strk:**										
Unit	**3 :** 4	**Alchl/Drgs:** 0	**Speed:** 60 MPH	**Dir:** S	**Veh Mnvr/Ped Actn:** 1	**Obj Strk:**										
164	**105221880**	20.610	09/04/2017 17:34	REAR END, SLOW OR STOP	$ 5000	0	0	0	0	1	1	1	1	0	0	
Unit	**1 :** 4	**Alchl/Drgs:** 0	**Speed:** 55 MPH	**Dir:** E	**Veh Mnvr/Ped Actn:** 11	**Obj Strk:**										
Unit	**2 :** 5	**Alchl/Drgs:** 0	**Speed:** 3 MPH	**Dir:** E	**Veh Mnvr/Ped Actn:** 11	**Obj Strk:**										
165	**105325132**	20.610	12/16/2017 10:44	REAR END, SLOW OR STOP	$ 8000	0	0	0	0	1	1	1	1	0	0	
Unit	**1 :** 1	**Alchl/Drgs:** 0	**Speed:** 60 MPH	**Dir:** N	**Veh Mnvr/Ped Actn:** 4	**Obj Strk:**										
Unit	**2 :** 1	**Alchl/Drgs:** 0	**Speed:** 60 MPH	**Dir:** N	**Veh Mnvr/Ped Actn:** 1	**Obj Strk:**										
166	**105373248**	20.610	02/04/2018 13:16	REAR END, SLOW OR STOP	$ 8000	0	0	0	0	2	1	2	3	0	0	
Unit	**1 :** 1	**Alchl/Drgs:** 0	**Speed:** 60 MPH	**Dir:** E	**Veh Mnvr/Ped Actn:** 4	**Obj Strk:**										
Unit	**2 :** 4	**Alchl/Drgs:** 0	**Speed:** 60 MPH	**Dir:** E	**Veh Mnvr/Ped Actn:** 4	**Obj Strk:**										
167	**105604687**	20.610	09/13/2018 12:16	SIDESWIPE, SAME DIRECTION	$ 5500	0	0	0	0	1	1	1	3	0	0	
Unit	**1 :** 25	**Alchl/Drgs:** 0	**Speed:** 50 MPH	**Dir:** N	**Veh Mnvr/Ped Actn:** 5	**Obj Strk:**										
Unit	**2 :** 1	**Alchl/Drgs:** 0	**Speed:** 60 MPH	**Dir:** N	**Veh Mnvr/Ped Actn:** 4	**Obj Strk:**										
168	**105610078**	20.610	09/17/2018 09:52	REAR END, SLOW OR STOP	$ 800	0	0	0	0	1	1	1	3	0	0	
Unit	**1 :** 1	**Alchl/Drgs:** 0	**Speed:** 15 MPH	**Dir:** E	**Veh Mnvr/Ped Actn:** 11	**Obj Strk:**										
Unit	**2 :** 2	**Alchl/Drgs:** 0	**Speed:** 20 MPH	**Dir:** E	**Veh Mnvr/Ped Actn:** 4	**Obj Strk:**										
169	**105679359**	20.610	11/16/2018 17:05	REAR END, SLOW OR STOP	$ 1600	0	0	0	0	1	1	1	3	0	0	
Unit	**1 :** 12	**Alchl/Drgs:** 0	**Speed:** 45 MPH	**Dir:** E	**Veh Mnvr/Ped Actn:** 11	**Obj Strk:**										
Unit	**2 :** 5	**Alchl/Drgs:** 0	**Speed:** 45 MPH	**Dir:** E	**Veh Mnvr/Ped Actn:** 1	**Obj Strk:**										
170	**105716333**	20.610	11/29/2018 17:44	REAR END, SLOW OR STOP	$ 3000	0	0	0	0	1	5	1	1	0	0	
Unit	**1 :** 4	**Alchl/Drgs:** 0	**Speed:** 30 MPH	**Dir:** E	**Veh Mnvr/Ped Actn:** 4	**Obj Strk:**										
Unit	**2 :** 1	**Alchl/Drgs:** 0	**Speed:** 0 MPH	**Dir:** E	**Veh Mnvr/Ped Actn:** 1	**Obj Strk:**										
171	**105716135**	20.610	12/19/2018 14:04	REAR END, SLOW OR STOP	$ 6000	0	0	0	1	1	1	1	3	0	0	
Unit	**1 :** 4	**Alchl/Drgs:** 0	**Speed:** 55 MPH	**Dir:** E	**Veh Mnvr/Ped Actn:** 11	**Obj Strk:**										
Unit	**2 :** 1	**Alchl/Drgs:** 0	**Speed:** 60 MPH	**Dir:** E	**Veh Mnvr/Ped Actn:** 11	**Obj Strk:**										

All data presented in this report comes explicitly from the Traffic Engineering Accident Analysis System based upon va criteria provided by the report's creator. The onus is strictly upon the user of this report to exercise due diligence in in and further representing this data.

DocuSign Envelope ID: 5C03745C-4B01-4834-A65D-B77F558A4F46

North Carolina Department of Transportation
Traffic Engineering Accident Analysis System
Strip Analysis Report

Acc No	Crash ID	Milepost	Date	Accident Type	Total Damage	Injuries F	A	B	C	Condition R	L	W	Road Ch	Ci	Trfc Ctl Dv	Op
172	**105744242**	20.650	12/28/2018 15:27	REAR END, SLOW OR STOP	$ 23000	0	0	0	0	2	1	1	1	0	0	
Unit	**1 :** 1	**Alchl/Drgs:** 0	**Speed:** 45 MPH	**Dir:** E	**Veh Mnvr/Ped Actn:** 11	**Obj Strk:**										
Unit	**2 :** 1	**Alchl/Drgs:** 0	**Speed:** 35 MPH	**Dir:** E	**Veh Mnvr/Ped Actn:** 11	**Obj Strk:**										
Unit	**3 :** 1	**Alchl/Drgs:** 0	**Speed:** 30 MPH	**Dir:** E	**Veh Mnvr/Ped Actn:** 11	**Obj Strk:**										
Unit	**4 :** 1	**Alchl/Drgs:** 0	**Speed:** 30 MPH	**Dir:** E	**Veh Mnvr/Ped Actn:** 11	**Obj Strk:**										
Unit	**5 :** 1	**Alchl/Drgs:** 0	**Speed:** 55 MPH	**Dir:** E	**Veh Mnvr/Ped Actn:** 4	**Obj Strk:** 44										
173	**104032679**	20.657	04/01/2014 17:17	FIXED OBJECT	$ 900	0	0	0	0	1	1	1	2	0	0	
Unit	**1 :** 1	**Alchl/Drgs:** 0	**Speed:** 50 MPH	**Dir:** E	**Veh Mnvr/Ped Actn:** 4	**Obj Strk:** 44										
174	**104052366**	20.657	05/08/2014 17:31	REAR END, SLOW OR STOP	$ 4200	0	0	0	1	1	1	1	2	0	0	
Unit	**1 :** 4	**Alchl/Drgs:** 0	**Speed:** 45 MPH	**Dir:** E	**Veh Mnvr/Ped Actn:** 4	**Obj Strk:**										
Unit	**2 :** 4	**Alchl/Drgs:** 0	**Speed:** 45 MPH	**Dir:** E	**Veh Mnvr/Ped Actn:** 11	**Obj Strk:**										
175	**104527976**	20.657	10/20/2015 17:38	REAR END, SLOW OR STOP	$ 4500	0	0	0	0	1	1	1	1	0	0	
Unit	**1 :** 1	**Alchl/Drgs:** 0	**Speed:** 20 MPH	**Dir:** N	**Veh Mnvr/Ped Actn:** 1	**Obj Strk:**										
Unit	**2 :** 3	**Alchl/Drgs:** 0	**Speed:** 50 MPH	**Dir:** N	**Veh Mnvr/Ped Actn:** 4	**Obj Strk:**										
176	**104586815**	20.657	12/15/2015 08:33	REAR END, SLOW OR STOP	$ 5100	0	0	0	0	1	1	1	1	0	0	
Unit	**1 :** 4	**Alchl/Drgs:** 0	**Speed:** 35 MPH	**Dir:** W	**Veh Mnvr/Ped Actn:** 4	**Obj Strk:**										
Unit	**2 :** 4	**Alchl/Drgs:** 0	**Speed:** 35 MPH	**Dir:** W	**Veh Mnvr/Ped Actn:** 11	**Obj Strk:**										
177	**105143501**	20.662	06/08/2017 13:49	RAN OFF ROAD - LEFT	$ 12500	0	0	0	0	1	1	1	1	0		
Unit	**1 :** 10	**Alchl/Drgs:** 7	**Speed:** 65 MPH	**Dir:** W	**Veh Mnvr/Ped Actn:** 4	**Obj Strk:** 59										
178	**104240107**	20.681	12/01/2014 18:13	REAR END, SLOW OR STOP	$ 4000	0	0	0	0	1	2	1	1	0	0	2
Unit	**1 :** 1	**Alchl/Drgs:** 0	**Speed:** 35 MPH	**Dir:** W	**Veh Mnvr/Ped Actn:** 4	**Obj Strk:**										
Unit	**2 :** 1	**Alchl/Drgs:** 0	**Speed:** 10 MPH	**Dir:** W	**Veh Mnvr/Ped Actn:** 11	**Obj Strk:**										
179	**105029830**	20.690	03/02/2017 06:55	PARKED MOTOR VEHICLE	$ 1127	0	0	0	0	1	1	1	3	0	0	
Unit	**1 :** 14	**Alchl/Drgs:** 7	**Speed:** 0 MPH	**Dir:** NW	**Veh Mnvr/Ped Actn:** 2	**Obj Strk:** 20										
Unit	**2 :** 31	**Alchl/Drgs:** 7	**Speed:** 0 MPH	**Dir:** NW	**Veh Mnvr/Ped Actn:** 2	**Obj Strk:** 20										
180	**104817752**	20.710	08/13/2016 10:46	REAR END, SLOW OR STOP	$ 11500	0	0	0	0	1	1	1	1	0	0	
Unit	**1 :** 2	**Alchl/Drgs:** 0	**Speed:** 50 MPH	**Dir:** S	**Veh Mnvr/Ped Actn:** 4	**Obj Strk:** 44										
Unit	**2 :** 4	**Alchl/Drgs:** 0	**Speed:** 55 MPH	**Dir:** S	**Veh Mnvr/Ped Actn:** 1	**Obj Strk:**										

DocuSign Envelope ID: 5C03745C-4B01-4834-A65D-B77F558A4F46

North Carolina Department of Transportation
Traffic Engineering Accident Analysis System
Strip Analysis Report

Acc No	Crash ID	Milepost	Date	Accident Type	Total Damage	Injuries F	A	B	C	Condition R	L	W	Road Ch	Ci	Trfc Ctl Dv	Op
181	**104822590**	20.710	08/17/2016 17:13	REAR END, SLOW OR STOP	$ 4100	0	0	0	1	1	1	2	1	0	0	
Unit	**1 :** 2	**Alchl/Drgs:** 0	**Speed:** 30 MPH	**Dir:** W	**Veh Mnvr/Ped Actn:** 4	**Obj Strk:**										
Unit	**2 :** 1	**Alchl/Drgs:** 0	**Speed:** 30 MPH	**Dir:** W	**Veh Mnvr/Ped Actn:** 1	**Obj Strk:**										
Unit	**3 :** 4	**Alchl/Drgs:** 0	**Speed:** 30 MPH	**Dir:** W	**Veh Mnvr/Ped Actn:** 1	**Obj Strk:**										
Unit	**4 :** 32	**Alchl/Drgs:** 7	**Speed:** 30 MPH	**Dir:** W	**Veh Mnvr/Ped Actn:** 1	**Obj Strk:**										
182	**105095189**	20.710	05/09/2017 15:18	FIXED OBJECT	$ 1200	0	0	0	0	1	1	1	3	0	0	
Unit	**1 :** 1	**Alchl/Drgs:** 0	**Speed:** 50 MPH	**Dir:** S	**Veh Mnvr/Ped Actn:** 4	**Obj Strk:** 44										
183	**105102421**	20.710	05/16/2017 07:58	REAR END, SLOW OR STOP	$ 4000	0	0	0	0	1	1	1	1	0	0	
Unit	**1 :** 4	**Alchl/Drgs:** 0	**Speed:** 60 MPH	**Dir:** S	**Veh Mnvr/Ped Actn:** 4	**Obj Strk:**										
Unit	**2 :** 1	**Alchl/Drgs:** 0	**Speed:** 60 MPH	**Dir:** S	**Veh Mnvr/Ped Actn:** 11	**Obj Strk:**										
184	**105107528**	20.710	05/19/2017 16:56	REAR END, SLOW OR STOP	$ 6000	0	0	0	0	1	1	1	1	0	0	
Unit	**1 :** 5	**Alchl/Drgs:** 0	**Speed:** 35 MPH	**Dir:** E	**Veh Mnvr/Ped Actn:** 4	**Obj Strk:**										
Unit	**2 :** 5	**Alchl/Drgs:** 0	**Speed:** 35 MPH	**Dir:** E	**Veh Mnvr/Ped Actn:** 1	**Obj Strk:**										
Unit	**3 :** 1	**Alchl/Drgs:** 0	**Speed:** 35 MPH	**Dir:** E	**Veh Mnvr/Ped Actn:** 1	**Obj Strk:**										
185	**105136541**	20.710	06/18/2017 12:25	REAR END, SLOW OR STOP	$ 8000	0	0	0	0	1	1	1	3	0	0	
Unit	**1 :** 1	**Alchl/Drgs:** 0	**Speed:** 60 MPH	**Dir:** E	**Veh Mnvr/Ped Actn:** 4	**Obj Strk:**										
Unit	**2 :** 1	**Alchl/Drgs:** 0	**Speed:** 60 MPH	**Dir:** E	**Veh Mnvr/Ped Actn:** 4	**Obj Strk:** 44										
Unit	**3 :** 4	**Alchl/Drgs:** 0	**Speed:** 60 MPH	**Dir:** E	**Veh Mnvr/Ped Actn:** 1	**Obj Strk:**										
186	**105154943**	20.710	07/08/2017 16:25	REAR END, SLOW OR STOP	$ 800	0	0	0	0	2	1	2	3	0	0	
Unit	**1 :** 32	**Alchl/Drgs:** 7	**Speed:** 15 MPH	**Dir:** E	**Veh Mnvr/Ped Actn:** 11	**Obj Strk:**										
Unit	**2 :** 4	**Alchl/Drgs:** 0	**Speed:** 15 MPH	**Dir:** E	**Veh Mnvr/Ped Actn:** 1	**Obj Strk:**										
187	**105435240**	20.710	03/16/2018 17:39	REAR END, SLOW OR STOP	$ 3500	0	0	0	0	1	1	1	1	0	0	2
Unit	**1 :** 1	**Alchl/Drgs:** 0	**Speed:** 20 MPH	**Dir:** S	**Veh Mnvr/Ped Actn:** 5	**Obj Strk:**										
Unit	**2 :** 1	**Alchl/Drgs:** 0	**Speed:** 10 MPH	**Dir:** S	**Veh Mnvr/Ped Actn:** 11	**Obj Strk:**										
Unit	**3 :** 1	**Alchl/Drgs:** 0	**Speed:** 0 MPH	**Dir:** S	**Veh Mnvr/Ped Actn:** 1	**Obj Strk:**										
188	**105711846**	20.710	12/15/2018 07:00	REAR END, SLOW OR STOP	$ 850	0	0	0	0	2	5	2	1	0	0	
Unit	**1 :** 14	**Alchl/Drgs:** 0	**Speed:** 55 MPH	**Dir:** E	**Veh Mnvr/Ped Actn:** 4	**Obj Strk:**										
Unit	**2 :** 2	**Alchl/Drgs:** 0	**Speed:** 50 MPH	**Dir:** E	**Veh Mnvr/Ped Actn:** 11	**Obj Strk:**										

All data presented in this report comes explicitly from the Traffic Engineering Accident Analysis System based upon va criteria provided by the report's creator. The onus is strictly upon the user of this report to exercise due diligence in in and further representing this data.

DocuSign Envelope ID: 5C03745C-4B01-4834-A65D-B77F558A4F46

North Carolina Department of Transportation
Traffic Engineering Accident Analysis System
Strip Analysis Report

Acc No	Crash ID	Milepost	Date	Accident Type	Total Damage	Injuries F	A	B	C	Condition R	L	W	Road Ch	Ci	Trfc Ctl Dv	Op
189	**105190852**	20.751	08/06/2017 19:47	REAR END, TURN	$ 4700	0	0	0	0	1	1	1	1	0	0	1
Unit	**1 :** 1	**Alchl/Drgs:**	0	**Speed:** 70 MPH	**Dir:** W	**Veh Mnvr/Ped Actn:**				4			**Obj Strk:**			
Unit	**2 :** 1	**Alchl/Drgs:**	0	**Speed:** 40 MPH	**Dir:** W	**Veh Mnvr/Ped Actn:**				11			**Obj Strk:**			
Unit	**3 :** 1	**Alchl/Drgs:**	0	**Speed:** 35 MPH	**Dir:** W	**Veh Mnvr/Ped Actn:**				4			**Obj Strk:**			
190	**105416618**	20.755	02/28/2018 20:35	SIDESWIPE, SAME DIRECTION	$ 5000	0	0	0	0	2	5	3	1	0	0	2
Unit	**1 :** 32	**Alchl/Drgs:**	7	**Speed:** 40 MPH	**Dir:** W	**Veh Mnvr/Ped Actn:**				5			**Obj Strk:**			
Unit	**2 :** 1	**Alchl/Drgs:**	0	**Speed:** 35 MPH	**Dir:** W	**Veh Mnvr/Ped Actn:**				4			**Obj Strk:**		46	
191	**104422032**	20.757	06/19/2015 18:06	REAR END, SLOW OR STOP	$ 1400	0	0	0	0	2	1	2	1	0		1
Unit	**1 :** 1	**Alchl/Drgs:**	0	**Speed:** 35 MPH	**Dir:** E	**Veh Mnvr/Ped Actn:**				4			**Obj Strk:**			
Unit	**2 :** 1	**Alchl/Drgs:**	0	**Speed:** 30 MPH	**Dir:** E	**Veh Mnvr/Ped Actn:**				11			**Obj Strk:**			
Unit	**3 :** 32	**Alchl/Drgs:**	7	**Speed:** 30 MPH	**Dir:** E	**Veh Mnvr/Ped Actn:**				11			**Obj Strk:**			
192	**105036849**	20.757	03/02/2017 07:32	REAR END, SLOW OR STOP	$ 3000	0	0	0	0	1	1	1	1	0		
Unit	**1 :** 2	**Alchl/Drgs:**	0	**Speed:** 0 MPH	**Dir:** W	**Veh Mnvr/Ped Actn:**				4			**Obj Strk:**			
Unit	**2 :** 2	**Alchl/Drgs:**	0	**Speed:** 35 MPH	**Dir:** W	**Veh Mnvr/Ped Actn:**				1			**Obj Strk:**			
193	**105117247**	20.757	05/15/2017 17:04	SIDESWIPE, SAME DIRECTION	$ 4500	0	0	0	0	1	1	1	1	0		
Unit	**1 :** 11	**Alchl/Drgs:**	0	**Speed:** 40 MPH	**Dir:** W	**Veh Mnvr/Ped Actn:**				4			**Obj Strk:**			
Unit	**2 :** 4	**Alchl/Drgs:**	0	**Speed:** 50 MPH	**Dir:** W	**Veh Mnvr/Ped Actn:**				4			**Obj Strk:**			
194	**105118420**	20.757	05/19/2017 15:10	RAN OFF ROAD - RIGHT	$ 6000	0	0	0	0	1	1	2	1	0		
Unit	**1 :** 32	**Alchl/Drgs:**	7	**Speed:** 70 MPH	**Dir:** W	**Veh Mnvr/Ped Actn:**				5			**Obj Strk:**		42	
Unit	**2 :** 1	**Alchl/Drgs:**	0	**Speed:** 50 MPH	**Dir:** W	**Veh Mnvr/Ped Actn:**				15			**Obj Strk:**		42	
195	**105163305**	20.757	07/08/2017 15:50	REAR END, SLOW OR STOP	$ 2000	0	0	0	0	1	1	2	1	0		2
Unit	**1 :** 2	**Alchl/Drgs:**	0	**Speed:** 10 MPH	**Dir:** S	**Veh Mnvr/Ped Actn:**				11			**Obj Strk:**			
Unit	**2 :** 4	**Alchl/Drgs:**	0	**Speed:** 10 MPH	**Dir:** S	**Veh Mnvr/Ped Actn:**				4			**Obj Strk:**			
196	**105197891**	20.757	08/07/2017 16:41	REAR END, SLOW OR STOP	$ 9000	0	0	0	2	1	1	1	1	0	0	
Unit	**1 :** 1	**Alchl/Drgs:**	0	**Speed:** 40 MPH	**Dir:** W	**Veh Mnvr/Ped Actn:**				4			**Obj Strk:**			
Unit	**2 :** 1	**Alchl/Drgs:**	0	**Speed:** 20 MPH	**Dir:** W	**Veh Mnvr/Ped Actn:**				11			**Obj Strk:**			
Unit	**3 :** 1	**Alchl/Drgs:**	0	**Speed:** 0 MPH	**Dir:** W	**Veh Mnvr/Ped Actn:**				1			**Obj Strk:**			
197	**105224804**	20.757	09/04/2017 11:53	OTHER COLLISION WITH VEHICLE	$ 1000	0	0	0	0	1	1	1	1	0		
Unit	**1 :** 32	**Alchl/Drgs:**	7	**Speed:** 50 MPH	**Dir:** E	**Veh Mnvr/Ped Actn:**				4			**Obj Strk:**			

DocuSign Envelope ID: 5C03745C-4B01-4834-A65D-B77F558A4F46

North Carolina Department of Transportation
Traffic Engineering Accident Analysis System
Strip Analysis Report

Acc No	Crash ID	Milepost	Date	Accident Type	Total Damage	Injuries F	A	B	C	Condition R	L	W	Road Ch	Ci	Trfc Ctl Dv	Op
Unit	**2 :** 4	**Alchl/Drgs:**	0	**Speed:** 50 MPH	**Dir:** E	**Veh Mnvr/Ped Actn:**				4			**Obj Strk:**			
198	**105311373**	20.757	11/17/2017 08:56	REAR END, SLOW OR STOP	$ 6000	0	0	0	0	1	1	1		0		
Unit	**1 :** 2	**Alchl/Drgs:**	0	**Speed:** 0 MPH	**Dir:** E	**Veh Mnvr/Ped Actn:**				4			**Obj Strk:**			
Unit	**2 :** 4	**Alchl/Drgs:**	0	**Speed:** 0 MPH	**Dir:** E	**Veh Mnvr/Ped Actn:**				1			**Obj Strk:**			
199	**105345417**	20.757	12/26/2017 17:48	REAR END, SLOW OR STOP	$ 4000	0	0	0	0	1	5	1	1	0		2
Unit	**1 :** 4	**Alchl/Drgs:**	0	**Speed:** 50 MPH	**Dir:** E	**Veh Mnvr/Ped Actn:**				4			**Obj Strk:**			
Unit	**2 :** 4	**Alchl/Drgs:**	0	**Speed:** 10 MPH	**Dir:** E	**Veh Mnvr/Ped Actn:**				11			**Obj Strk:**			
200	**105431338**	20.757	03/09/2018 15:50	REAR END, SLOW OR STOP	$ 14000	0	0	1	0	1	1	1	1	0	0	2
Unit	**1 :** 2	**Alchl/Drgs:**	0	**Speed:** 40 MPH	**Dir:** E	**Veh Mnvr/Ped Actn:**				4			**Obj Strk:**			
Unit	**2 :** 2	**Alchl/Drgs:**	0	**Speed:** 0 MPH	**Dir:** E	**Veh Mnvr/Ped Actn:**				1			**Obj Strk:**			
Unit	**3 :** 1	**Alchl/Drgs:**	0	**Speed:** 0 MPH	**Dir:** E	**Veh Mnvr/Ped Actn:**				1			**Obj Strk:**			
201	**105456253**	20.757	04/16/2018 06:52	SIDESWIPE, SAME DIRECTION	$ 1800	0	0	0	0	2	1	2	3	0	0	2
Unit	**1 :** 1	**Alchl/Drgs:**	0	**Speed:** 40 MPH	**Dir:** E	**Veh Mnvr/Ped Actn:**				4			**Obj Strk:**			
Unit	**2 :** 4	**Alchl/Drgs:**	0	**Speed:** 35 MPH	**Dir:** E	**Veh Mnvr/Ped Actn:**				4			**Obj Strk:**			
202	**105494341**	20.757	05/14/2018 08:41	RAN OFF ROAD - RIGHT	$ 6000	0	0	0	0	1	1	1	3	0	0	
Unit	**1 :** 2	**Alchl/Drgs:**	0	**Speed:** 50 MPH	**Dir:** W	**Veh Mnvr/Ped Actn:**				15			**Obj Strk:**		44	
203	**105494320**	20.757	05/14/2018 08:59	REAR END, SLOW OR STOP	$ 7000	0	0	0	0	1	1	1	3	0		
Unit	**1 :** 4	**Alchl/Drgs:**	0	**Speed:** 30 MPH	**Dir:** W	**Veh Mnvr/Ped Actn:**				11			**Obj Strk:**			
Unit	**2 :** 2	**Alchl/Drgs:**	0	**Speed:** 15 MPH	**Dir:** W	**Veh Mnvr/Ped Actn:**				1			**Obj Strk:**			
204	**104231080**	20.760	11/20/2014 07:42	REAR END, SLOW OR STOP	$ 1600	0	0	0	0	1	1	1	1	0		
Unit	**1 :** 2	**Alchl/Drgs:**	0	**Speed:** 40 MPH	**Dir:** E	**Veh Mnvr/Ped Actn:**				4			**Obj Strk:**			
Unit	**2 :** 4	**Alchl/Drgs:**	0	**Speed:** 0 MPH	**Dir:** E	**Veh Mnvr/Ped Actn:**				1			**Obj Strk:**			
Unit	**3 :** 1	**Alchl/Drgs:**	0	**Speed:** 0 MPH	**Dir:** E	**Veh Mnvr/Ped Actn:**				1			**Obj Strk:**			
205	**104492385**	20.760	09/17/2015 18:26	REAR END, SLOW OR STOP	$ 20000	0	0	0	0	1	1	1	3	0	0	
Unit	**1 :** 2	**Alchl/Drgs:**	0	**Speed:** 50 MPH	**Dir:** E	**Veh Mnvr/Ped Actn:**				4			**Obj Strk:**			
Unit	**2 :** 4	**Alchl/Drgs:**	0	**Speed:** 50 MPH	**Dir:** E	**Veh Mnvr/Ped Actn:**				11			**Obj Strk:**		44	
Unit	**3 :** 2	**Alchl/Drgs:**	0	**Speed:** 50 MPH	**Dir:** E	**Veh Mnvr/Ped Actn:**				11			**Obj Strk:**			

DocuSign Envelope ID: 5C03745C-4B01-4834-A65D-B77F558A4F46

North Carolina Department of Transportation
Traffic Engineering Accident Analysis System
Strip Analysis Report

Acc No	Crash ID	Milepost	Date	Accident Type	Total Damage	Injuries F	A	B	C	Condition R	L	W	Road Ch	Ci	Trfc Ctl Dv	Op
206	**105521765**	20.760	06/17/2018 12:31	REAR END, SLOW OR STOP	$ 1500	0	0	0	1	1	1	1	1	0	0	
Unit	**1 :** 4	**Alchl/Drgs:** 0	**Speed:** 15 MPH	**Dir:** SE	**Veh Mnvr/Ped Actn:** 11	**Obj Strk:**										
Unit	**2 :** 4	**Alchl/Drgs:** 0	**Speed:** 0 MPH	**Dir:** SE	**Veh Mnvr/Ped Actn:** 1	**Obj Strk:**										
207	**105558247**	20.760	07/27/2018 12:35	REAR END, SLOW OR STOP	$ 2000	0	0	0	0	1	1	1	1	0	0	1
Unit	**1 :** 2	**Alchl/Drgs:** 0	**Speed:** 10 MPH	**Dir:** E	**Veh Mnvr/Ped Actn:** 4	**Obj Strk:**										
Unit	**2 :** 1	**Alchl/Drgs:** 0	**Speed:** 5 MPH	**Dir:** E	**Veh Mnvr/Ped Actn:** 4	**Obj Strk:**										
208	**105559256**	20.760	07/27/2018 15:37	REAR END, SLOW OR STOP	$ 200	0	0	0	1	1	1	1	1	0	0	2
Unit	**1 :** 1	**Alchl/Drgs:** 0	**Speed:** 10 MPH	**Dir:** W	**Veh Mnvr/Ped Actn:** 4	**Obj Strk:**										
Unit	**2 :** 4	**Alchl/Drgs:** 0	**Speed:** 10 MPH	**Dir:** W	**Veh Mnvr/Ped Actn:** 4	**Obj Strk:**										
209	**104136647**	20.761	07/24/2014 17:29	REAR END, SLOW OR STOP	$ 1800	0	0	0	0	1	1	1	1	0		2
Unit	**1 :** 1	**Alchl/Drgs:** 0	**Speed:** 45 MPH	**Dir:** E	**Veh Mnvr/Ped Actn:** 4	**Obj Strk:**										
Unit	**2 :** 1	**Alchl/Drgs:** 0	**Speed:** 5 MPH	**Dir:** E	**Veh Mnvr/Ped Actn:** 11	**Obj Strk:** 44										
210	**104905821**	20.762	11/07/2016 02:17	ANIMAL	$ 8000	0	0	0	0	1	5	1	1	0	0	
Unit	**1 :** 4	**Alchl/Drgs:** 0	**Speed:** 60 MPH	**Dir:** W	**Veh Mnvr/Ped Actn:** 4	**Obj Strk:** 17										
211	**103988533**	20.770	02/27/2014 01:49	SIDESWIPE, SAME DIRECTION	$ 4500	0	0	0	0	1	5	2	3	0	0	
Unit	**1 :** 15	**Alchl/Drgs:** 0	**Speed:** 60 MPH	**Dir:** E	**Veh Mnvr/Ped Actn:** 4	**Obj Strk:**										
Unit	**2 :** 1	**Alchl/Drgs:** 0	**Speed:** 60 MPH	**Dir:** E	**Veh Mnvr/Ped Actn:** 4	**Obj Strk:**										
212	**104817753**	20.770	08/13/2016 10:33	REAR END, SLOW OR STOP	$ 1400	0	0	0	0	1	1	1	1	0	0	
Unit	**1 :** 4	**Alchl/Drgs:** 0	**Speed:** 60 MPH	**Dir:** S	**Veh Mnvr/Ped Actn:** 4	**Obj Strk:**										
Unit	**2 :** 1	**Alchl/Drgs:** 0	**Speed:** 55 MPH	**Dir:** S	**Veh Mnvr/Ped Actn:** 11	**Obj Strk:**										
213	**104919905**	20.770	11/17/2016 17:44	REAR END, SLOW OR STOP	$ 12000	0	0	0	0	1	1	1	1	0	0	
Unit	**1 :** 4	**Alchl/Drgs:** 0	**Speed:** 60 MPH	**Dir:** E	**Veh Mnvr/Ped Actn:** 4	**Obj Strk:**										
Unit	**2 :** 4	**Alchl/Drgs:** 0	**Speed:** 60 MPH	**Dir:** E	**Veh Mnvr/Ped Actn:** 1	**Obj Strk:**										
214	**104921044**	20.770	11/21/2016 07:57	REAR END, SLOW OR STOP	$ 7000	0	0	0	0	1	1	1	1	0	0	
Unit	**1 :** 1	**Alchl/Drgs:** 0	**Speed:** 60 MPH	**Dir:** S	**Veh Mnvr/Ped Actn:** 5	**Obj Strk:**										
Unit	**2 :** 4	**Alchl/Drgs:** 0	**Speed:** 60 MPH	**Dir:** S	**Veh Mnvr/Ped Actn:** 11	**Obj Strk:**										

DocuSign Envelope ID: 5C03745C-4B01-4834-A65D-B77F558A4F46

North Carolina Department of Transportation
Traffic Engineering Accident Analysis System
Strip Analysis Report

Acc No	Crash ID	Milepost	Date	Accident Type	Total Damage	Injuries F	A	B	C	Condition R	L	W	Road Ch	Ci	Trfc Ctl Dv	Op
215	**104952401**	20.770	11/29/2016 02:20	REAR END, SLOW OR STOP	$ 3000	0	0	0	0	1	4	1	2	0	0	
Unit	**1 :** 1	**Alchl/Drgs:** 0	**Speed:** 25 MPH	**Dir:** E	**Veh Mnvr/Ped Actn:** 5	**Obj Strk:**										
Unit	**2 :** 14	**Alchl/Drgs:** 7	**Speed:** 25 MPH	**Dir:** E	**Veh Mnvr/Ped Actn:** 4	**Obj Strk:**										
216	**105092061**	20.770	05/03/2017 10:23	SIDESWIPE, SAME DIRECTION	$ 1010	0	0	0	0	1	1	1	1	0	0	
Unit	**1 :** 4	**Alchl/Drgs:** 0	**Speed:** 50 MPH	**Dir:** E	**Veh Mnvr/Ped Actn:** 5	**Obj Strk:**										
Unit	**2 :** 4	**Alchl/Drgs:** 0	**Speed:** 50 MPH	**Dir:** E	**Veh Mnvr/Ped Actn:** 4	**Obj Strk:**										
217	**105378197**	20.770	02/08/2018 10:04	SIDESWIPE, SAME DIRECTION	$ 3200	0	0	0	0	1	1	1	1	0	0	
Unit	**1 :** 12	**Alchl/Drgs:** 0	**Speed:** 60 MPH	**Dir:** S	**Veh Mnvr/Ped Actn:** 4	**Obj Strk:**										
Unit	**2 :** 1	**Alchl/Drgs:** 0	**Speed:** 55 MPH	**Dir:** S	**Veh Mnvr/Ped Actn:** 5	**Obj Strk:**										
218	**105484769**	20.770	05/18/2018 10:08	REAR END, SLOW OR STOP	$ 20500	0	0	0	3	1	1	1	1	0	0	
Unit	**1 :** 4	**Alchl/Drgs:** 0	**Speed:** 5 MPH	**Dir:** S	**Veh Mnvr/Ped Actn:** 5	**Obj Strk:**										
Unit	**2 :** 10	**Alchl/Drgs:** 0	**Speed:** 53 MPH	**Dir:** S	**Veh Mnvr/Ped Actn:** 4	**Obj Strk:** 46										
Unit	**3 :** 2	**Alchl/Drgs:** 0	**Speed:** 0 MPH	**Dir:** S	**Veh Mnvr/Ped Actn:** 1	**Obj Strk:**										
Unit	**4 :** 4	**Alchl/Drgs:** 0	**Speed:** 55 MPH	**Dir:** S	**Veh Mnvr/Ped Actn:** 4	**Obj Strk:**										
219	**105220135**	20.795	09/04/2017 18:05	REAR END, SLOW OR STOP	$ 4500	0	0	0	1	1	1	1	1	0	0	
Unit	**1 :** 1	**Alchl/Drgs:** 0	**Speed:** 45 MPH	**Dir:** E	**Veh Mnvr/Ped Actn:** 11	**Obj Strk:**										
Unit	**2 :** 1	**Alchl/Drgs:** 0	**Speed:** 35 MPH	**Dir:** E	**Veh Mnvr/Ped Actn:** 11	**Obj Strk:**										
220	**104824023**	20.810	08/18/2016 16:55	REAR END, SLOW OR STOP	$ 26000	0	0	1	0	1	1	1	1	0	0	
Unit	**1 :** 4	**Alchl/Drgs:** 0	**Speed:** 30 MPH	**Dir:** E	**Veh Mnvr/Ped Actn:** 4	**Obj Strk:**										
Unit	**2 :** 5	**Alchl/Drgs:** 0	**Speed:** 30 MPH	**Dir:** E	**Veh Mnvr/Ped Actn:** 1	**Obj Strk:**										
Unit	**3 :** 4	**Alchl/Drgs:** 0	**Speed:** 30 MPH	**Dir:** E	**Veh Mnvr/Ped Actn:** 1	**Obj Strk:**										
Unit	**4 :** 4	**Alchl/Drgs:** 0	**Speed:** 30 MPH	**Dir:** E	**Veh Mnvr/Ped Actn:** 1	**Obj Strk:**										
221	**104890420**	20.810	10/21/2016 12:51	REAR END, SLOW OR STOP	$ 10000	0	0	0	0	1	1	1	1	0	0	
Unit	**1 :** 4	**Alchl/Drgs:** 0	**Speed:** 60 MPH	**Dir:** E	**Veh Mnvr/Ped Actn:** 4	**Obj Strk:**										
Unit	**2 :** 2	**Alchl/Drgs:** 0	**Speed:** 5 MPH	**Dir:** E	**Veh Mnvr/Ped Actn:** 11	**Obj Strk:**										
222	**104979456**	20.810	01/17/2017 17:56	REAR END, SLOW OR STOP	$ 1500	0	0	0	0	2	5	2	1	0	0	
Unit	**1 :** 1	**Alchl/Drgs:** 0	**Speed:** 20 MPH	**Dir:** E	**Veh Mnvr/Ped Actn:** 4	**Obj Strk:**										
Unit	**2 :** 1	**Alchl/Drgs:** 0	**Speed:** 20 MPH	**Dir:** E	**Veh Mnvr/Ped Actn:** 1	**Obj Strk:**										

DocuSign Envelope ID: 5C03745C-4B01-4834-A65D-B77F558A4F46

North Carolina Department of Transportation
Traffic Engineering Accident Analysis System
Strip Analysis Report

Acc No	Crash ID	Milepost	Date	Accident Type	Total Damage	Injuries F	A	B	C	Condition R	L	W	Road Ch	Ci	Trfc Ctl Dv	Op
223	**105148393**	20.810	06/30/2017 16:48	REAR END, SLOW OR STOP	$ 11200	0	0	0	1	1	1	2	3	0	0	
Unit	**1 :** 1	**Alchl/Drgs:**	0	**Speed:** 30 MPH	**Dir:** E	**Veh Mnvr/Ped Actn:**			4		**Obj Strk:**					
Unit	**2 :** 4	**Alchl/Drgs:**	0	**Speed:** 30 MPH	**Dir:** E	**Veh Mnvr/Ped Actn:**			4		**Obj Strk:**					
Unit	**3 :** 4	**Alchl/Drgs:**	0	**Speed:** 30 MPH	**Dir:** E	**Veh Mnvr/Ped Actn:**			1		**Obj Strk:**					
Unit	**4 :** 4	**Alchl/Drgs:**	0	**Speed:** 30 MPH	**Dir:** E	**Veh Mnvr/Ped Actn:**			1		**Obj Strk:**					
Unit	**5 :** 4	**Alchl/Drgs:**	7	**Speed:** 30 MPH	**Dir:** E	**Veh Mnvr/Ped Actn:**			1		**Obj Strk:**					
224	**105446057**	20.810	04/12/2018 07:38	FIXED OBJECT	$ 8900	0	0	0	0	1	1	1	1	0	0	
Unit	**1 :** 4	**Alchl/Drgs:**	0	**Speed:** 55 MPH	**Dir:** S	**Veh Mnvr/Ped Actn:**			4		**Obj Strk:**					
Unit	**2 :** 1	**Alchl/Drgs:**	0	**Speed:** 55 MPH	**Dir:** S	**Veh Mnvr/Ped Actn:**			4		**Obj Strk:**				44	
225	**104447055**	20.820	07/30/2015 16:17	REAR END, SLOW OR STOP	$ 4000	0	0	0	0	1	1	1	1	0	0	
Unit	**1 :** 4	**Alchl/Drgs:**	0	**Speed:** 20 MPH	**Dir:** N	**Veh Mnvr/Ped Actn:**			1		**Obj Strk:**					
Unit	**2 :** 14	**Alchl/Drgs:**	0	**Speed:** 20 MPH	**Dir:** N	**Veh Mnvr/Ped Actn:**			4		**Obj Strk:**					
226	**104461252**	20.820	08/13/2015 21:06	ANGLE	$ 15000	0	0	0	1	1	1	1	1	0	0	
Unit	**1 :** 1	**Alchl/Drgs:**	0	**Speed:** 65 MPH	**Dir:** W	**Veh Mnvr/Ped Actn:**			4		**Obj Strk:**				50	
Unit	**2 :** 14	**Alchl/Drgs:**	0	**Speed:** 60 MPH	**Dir:** W	**Veh Mnvr/Ped Actn:**			4		**Obj Strk:**					
Unit	**3 :** 4	**Alchl/Drgs:**	0	**Speed:** 60 MPH	**Dir:** W	**Veh Mnvr/Ped Actn:**			4		**Obj Strk:**				50	
227	**105257693**	20.820	10/15/2017 19:18	REAR END, SLOW OR STOP	$ 19000	0	1	0	0	1	2	1	1	0	0	
Unit	**1 :** 5	**Alchl/Drgs:**	1	**Speed:** 50 MPH	**Dir:** W	**Veh Mnvr/Ped Actn:**			4		**Obj Strk:**					
Unit	**2 :** 1	**Alchl/Drgs:**	0	**Speed:** 50 MPH	**Dir:** W	**Veh Mnvr/Ped Actn:**			1		**Obj Strk:**					
Unit	**3 :** 2	**Alchl/Drgs:**	0	**Speed:** 50 MPH	**Dir:** W	**Veh Mnvr/Ped Actn:**			1		**Obj Strk:**					
228	**104832866**	20.850	07/29/2016 16:25	REAR END, SLOW OR STOP	$ 3500	0	0	0	1	1	1	1	1	0	0	
Unit	**1 :** 4	**Alchl/Drgs:**	0	**Speed:** 30 MPH	**Dir:** E	**Veh Mnvr/Ped Actn:**			4		**Obj Strk:**					
Unit	**2 :** 4	**Alchl/Drgs:**	0	**Speed:** 0 MPH	**Dir:** E	**Veh Mnvr/Ped Actn:**			1		**Obj Strk:**					
229	**104064736**	20.857	05/23/2014 12:14	REAR END, SLOW OR STOP	$ 11400	0	0	0	3	1	1	1	1	0	0	
Unit	**1 :** 4	**Alchl/Drgs:**	0	**Speed:** 65 MPH	**Dir:** S	**Veh Mnvr/Ped Actn:**			4		**Obj Strk:**					
Unit	**2 :** 4	**Alchl/Drgs:**	0	**Speed:** 60 MPH	**Dir:** S	**Veh Mnvr/Ped Actn:**			11		**Obj Strk:**					
Unit	**3 :** 2	**Alchl/Drgs:**	0	**Speed:** 60 MPH	**Dir:** S	**Veh Mnvr/Ped Actn:**			11		**Obj Strk:**					
230	**104138591**	20.857	08/28/2014 10:47	ANIMAL	$ 1200	0	0	0	0	1	1	1	1	0	0	
Unit	**1 :** 1	**Alchl/Drgs:**	0	**Speed:** 60 MPH	**Dir:** E	**Veh Mnvr/Ped Actn:**			4		**Obj Strk:**				17	

DocuSign Envelope ID: 5C03745C-4B01-4834-A65D-B77F558A4F46

North Carolina Department of Transportation
Traffic Engineering Accident Analysis System
Strip Analysis Report

Acc No	Crash ID	Milepost	Date	Accident Type	Total Damage	Injuries F	A	B	C	Condition R	L	W	Road Ch	Ci	Trfc Ctl Dv	Op
231	**104250798**	20.857	12/09/2014 18:02	REAR END, SLOW OR STOP	$ 2000	0	0	0	0	1	5	1	1	0	0	
Unit	**1 :** 4	**Alchl/Drgs:**	0	**Speed:** 60 MPH	**Dir:** W	**Veh Mnvr/Ped Actn:**			4		**Obj Strk:**					
Unit	**2 :** 5	**Alchl/Drgs:**	0	**Speed:** 60 MPH	**Dir:** W	**Veh Mnvr/Ped Actn:**			11		**Obj Strk:**					
232	**104238637**	20.857	12/09/2014 18:03	REAR END, SLOW OR STOP	$ 12000	0	0	0	0	1	5	1	1	0	0	
Unit	**1 :** 1	**Alchl/Drgs:**	0	**Speed:** 50 MPH	**Dir:** N	**Veh Mnvr/Ped Actn:**			4		**Obj Strk:**					
Unit	**2 :** 4	**Alchl/Drgs:**	0	**Speed:** 0 MPH	**Dir:** N	**Veh Mnvr/Ped Actn:**			1		**Obj Strk:**					
233	**104955624**	20.857	12/20/2016 17:26	REAR END, SLOW OR STOP	$ 4000	0	0	0	0	1	1	1	1	0	0	
Unit	**1 :** 1	**Alchl/Drgs:**	0	**Speed:** 45 MPH	**Dir:** E	**Veh Mnvr/Ped Actn:**			4		**Obj Strk:**					
Unit	**2 :** 1	**Alchl/Drgs:**	0	**Speed:** 35 MPH	**Dir:** E	**Veh Mnvr/Ped Actn:**			11		**Obj Strk:**					
234	**105308098**	20.857	11/27/2017 18:15	REAR END, SLOW OR STOP	$ 100	0	0	0	0	1	5	1	3	0	0	
Unit	**1 :** 14	**Alchl/Drgs:**	0	**Speed:** 50 MPH	**Dir:** W	**Veh Mnvr/Ped Actn:**			11		**Obj Strk:**					
Unit	**2 :** 2	**Alchl/Drgs:**	0	**Speed:** 50 MPH	**Dir:** W	**Veh Mnvr/Ped Actn:**			1		**Obj Strk:**					
235	**105452089**	20.857	04/19/2018 13:57	SIDESWIPE, SAME DIRECTION	$ 2000	0	0	0	0	1	1	1	1	0	0	
Unit	**1 :** 1	**Alchl/Drgs:**	0	**Speed:** 55 MPH	**Dir:** S	**Veh Mnvr/Ped Actn:**			5		**Obj Strk:**					
Unit	**2 :** 4	**Alchl/Drgs:**	0	**Speed:** 60 MPH	**Dir:** S	**Veh Mnvr/Ped Actn:**			4		**Obj Strk:**					
236	**105635767**	20.857	10/13/2018 13:06	REAR END, SLOW OR STOP	$ 13000	0	0	1	1	1	1	1	1	0	0	
Unit	**1 :** 1	**Alchl/Drgs:**	0	**Speed:** 35 MPH	**Dir:** S	**Veh Mnvr/Ped Actn:**			4		**Obj Strk:**					
Unit	**2 :** 1	**Alchl/Drgs:**	0	**Speed:** 0 MPH	**Dir:** S	**Veh Mnvr/Ped Actn:**			1		**Obj Strk:**					
Unit	**3 :** 1	**Alchl/Drgs:**	0	**Speed:** 0 MPH	**Dir:** S	**Veh Mnvr/Ped Actn:**			1		**Obj Strk:**					
237	**104792111**	20.879	06/25/2016 13:06	SIDESWIPE, SAME DIRECTION	$ 3500	0	0	0	0	1	1	1	1	0		
Unit	**1 :** 4	**Alchl/Drgs:**	0	**Speed:** 60 MPH	**Dir:** E	**Veh Mnvr/Ped Actn:**			5		**Obj Strk:**					
Unit	**2 :** 1	**Alchl/Drgs:**	0	**Speed:** 60 MPH	**Dir:** E	**Veh Mnvr/Ped Actn:**			4		**Obj Strk:**					
238	**105245622**	20.879	10/06/2017 18:17	REAR END, SLOW OR STOP	$ 6500	0	0	0	0	1	1	1	1	0	0	
Unit	**1 :** 1	**Alchl/Drgs:**	0	**Speed:** 60 MPH	**Dir:** E	**Veh Mnvr/Ped Actn:**			4		**Obj Strk:**					
Unit	**2 :** 1	**Alchl/Drgs:**	0	**Speed:** 60 MPH	**Dir:** E	**Veh Mnvr/Ped Actn:**			4		**Obj Strk:**					
239	**104515648**	20.910	10/10/2015 11:02	REAR END, SLOW OR STOP	$ 7000	0	0	0	0	2	1	3	1	0	0	
Unit	**1 :** 1	**Alchl/Drgs:**	0	**Speed:** 45 MPH	**Dir:** W	**Veh Mnvr/Ped Actn:**			4		**Obj Strk:**					
Unit	**2 :** 4	**Alchl/Drgs:**	0	**Speed:** 50 MPH	**Dir:** W	**Veh Mnvr/Ped Actn:**			4		**Obj Strk:**					

DocuSign Envelope ID: 5C03745C-4B01-4834-A65D-B77F558A4F46

North Carolina Department of Transportation
Traffic Engineering Accident Analysis System
Strip Analysis Report

Acc No	Crash ID	Milepost	Date	Accident Type	Total Damage	Injuries F	A	B	C	Condition R	L	W	Road Ch	Ci	Trfc Ctl Dv	Op
240	**104517133**	20.910	10/12/2015 11:47	REAR END, SLOW OR STOP	$ 3000	0	0	0	0	1	1	1	1	0	0	
Unit	**1 :** 3	**Alchl/Drgs:** 0	**Speed:** 45 MPH	**Dir:** S	**Veh Mnvr/Ped Actn:** 4	**Obj Strk:**										
Unit	**2 :** 4	**Alchl/Drgs:** 0	**Speed:** 45 MPH	**Dir:** S	**Veh Mnvr/Ped Actn:** 11	**Obj Strk:**										
241	**104623617**	20.910	01/24/2016 14:44	OTHER NON-COLLISION	$ 3200	0	0	0	0	2	1	1	3	0	0	
Unit	**1 :** 11	**Alchl/Drgs:** 0	**Speed:** 60 MPH	**Dir:** E	**Veh Mnvr/Ped Actn:** 4	**Obj Strk:** 44										
242	**105226623**	20.910	09/20/2017 08:41	SIDESWIPE, SAME DIRECTION	$ 1800	0	0	0	0	1	1	1	1	0	0	
Unit	**1 :** 1	**Alchl/Drgs:** 0	**Speed:** 60 MPH	**Dir:** S	**Veh Mnvr/Ped Actn:** 5	**Obj Strk:**										
Unit	**2 :** 1	**Alchl/Drgs:** 0	**Speed:** 60 MPH	**Dir:** S	**Veh Mnvr/Ped Actn:** 4	**Obj Strk:**										
243	**105169150**	20.950	07/14/2017 15:39	REAR END, SLOW OR STOP	$ 3000	0	0	0	0	1	1	1	3	0		2
Unit	**1 :** 2	**Alchl/Drgs:** 0	**Speed:** 45 MPH	**Dir:** E	**Veh Mnvr/Ped Actn:** 4	**Obj Strk:**										
Unit	**2 :** 5	**Alchl/Drgs:** 0	**Speed:** 0 MPH	**Dir:** E	**Veh Mnvr/Ped Actn:** 1	**Obj Strk:**										
244	**105231901**	20.950	09/12/2017 16:15	REAR END, SLOW OR STOP	$ 1600	0	0	0	0	1	1	2	1	0	0	
Unit	**1 :** 1	**Alchl/Drgs:** 0	**Speed:** 0 MPH	**Dir:** E	**Veh Mnvr/Ped Actn:** 1	**Obj Strk:**										
Unit	**2 :** 1	**Alchl/Drgs:** 0	**Speed:** 0 MPH	**Dir:** E	**Veh Mnvr/Ped Actn:** 1	**Obj Strk:**										
245	**104614005**	20.954	01/14/2016 16:08	REAR END, SLOW OR STOP	$ 5800	0	0	0	0	1	1	1	1	0	0	
Unit	**1 :** 1	**Alchl/Drgs:** 0	**Speed:** 45 MPH	**Dir:** W	**Veh Mnvr/Ped Actn:** 1	**Obj Strk:**										
Unit	**2 :** 1	**Alchl/Drgs:** 0	**Speed:** 45 MPH	**Dir:** W	**Veh Mnvr/Ped Actn:** 11	**Obj Strk:**										
246	**104181523**	20.957	10/10/2014 13:30	REAR END, SLOW OR STOP	$ 2700	0	0	0	0	1	1	1	1	0	0	
Unit	**1 :** 2	**Alchl/Drgs:** 0	**Speed:** 60 MPH	**Dir:** N	**Veh Mnvr/Ped Actn:** 4	**Obj Strk:**										
Unit	**2 :** 2	**Alchl/Drgs:** 0	**Speed:** 55 MPH	**Dir:** N	**Veh Mnvr/Ped Actn:** 11	**Obj Strk:**										
Unit	**3 :** 1	**Alchl/Drgs:** 0	**Speed:** 40 MPH	**Dir:** N	**Veh Mnvr/Ped Actn:** 4	**Obj Strk:**										
247	**104186075**	20.957	10/17/2014 07:49	REAR END, SLOW OR STOP	$ 10500	0	0	0	3	1	1	1	1	0	0	
Unit	**1 :** 1	**Alchl/Drgs:** 0	**Speed:** 35 MPH	**Dir:** S	**Veh Mnvr/Ped Actn:** 4	**Obj Strk:**										
Unit	**2 :** 1	**Alchl/Drgs:** 0	**Speed:** 25 MPH	**Dir:** S	**Veh Mnvr/Ped Actn:** 11	**Obj Strk:**										
Unit	**3 :** 2	**Alchl/Drgs:** 0	**Speed:** 15 MPH	**Dir:** S	**Veh Mnvr/Ped Actn:** 11	**Obj Strk:**										
248	**104377735**	20.957	05/14/2015 16:12	SIDESWIPE, SAME DIRECTION	$ 5000	0	0	0	0	1	1	1	1	0	0	
Unit	**1 :** 14	**Alchl/Drgs:** 0	**Speed:** 60 MPH	**Dir:** S	**Veh Mnvr/Ped Actn:** 5	**Obj Strk:** 44										
Unit	**2 :** 1	**Alchl/Drgs:** 0	**Speed:** 60 MPH	**Dir:** S	**Veh Mnvr/Ped Actn:** 4	**Obj Strk:**										

DocuSign Envelope ID: 5C03745C-4B01-4834-A65D-B77F558A4F46

North Carolina Department of Transportation
Traffic Engineering Accident Analysis System
Strip Analysis Report

Acc No	Crash ID	Milepost	Date	Accident Type	Total Damage	Injuries F	A	B	C	Condition R	L	W	Road Ch	Ci	Trfc Ctl Dv	Op
249	**104596671**	20.957	12/25/2015 12:38	REAR END, SLOW OR STOP	$ 1000	0	0	0	0	2	1	2	1	0	0	
Unit	**1 :** 4	**Alchl/Drgs:** 0	**Speed:** 35 MPH	**Dir:** W	**Veh Mnvr/Ped Actn:** 4	**Obj Strk:**										
Unit	**2 :** 4	**Alchl/Drgs:** 0	**Speed:** 35 MPH	**Dir:** W	**Veh Mnvr/Ped Actn:** 11	**Obj Strk:**										
250	**104596672**	20.957	12/25/2015 12:39	REAR END, SLOW OR STOP	$ 8000	0	0	0	0	2	1	2	1	0	0	
Unit	**1 :** 1	**Alchl/Drgs:** 0	**Speed:** 45 MPH	**Dir:** W	**Veh Mnvr/Ped Actn:** 4	**Obj Strk:**										
Unit	**2 :** 4	**Alchl/Drgs:** 0	**Speed:** 40 MPH	**Dir:** W	**Veh Mnvr/Ped Actn:** 11	**Obj Strk:**										
251	**104747777**	20.957	05/28/2016 11:37	REAR END, SLOW OR STOP	$ 1300	0	0	0	3	1	1	1	1	0	0	
Unit	**1 :** 1	**Alchl/Drgs:** 0	**Speed:** 60 MPH	**Dir:** N	**Veh Mnvr/Ped Actn:** 5	**Obj Strk:**										
Unit	**2 :** 4	**Alchl/Drgs:** 0	**Speed:** 50 MPH	**Dir:** N	**Veh Mnvr/Ped Actn:** 11	**Obj Strk:**										
252	**105095207**	20.957	05/09/2017 14:58	REAR END, SLOW OR STOP	$ 1000	0	0	0	0	1	1	1	3	0	0	
Unit	**1 :** 4	**Alchl/Drgs:** 0	**Speed:** 45 MPH	**Dir:** S	**Veh Mnvr/Ped Actn:** 4	**Obj Strk:**										
Unit	**2 :** 1	**Alchl/Drgs:** 0	**Speed:** 45 MPH	**Dir:** S	**Veh Mnvr/Ped Actn:** 11	**Obj Strk:**										
253	**104583395**	20.962	12/10/2015 17:12	REAR END, SLOW OR STOP	$ 7000	0	0	0	0	1	5	1	1	0	0	
Unit	**1 :** 1	**Alchl/Drgs:** 0	**Speed:** 25 MPH	**Dir:** NW	**Veh Mnvr/Ped Actn:** 1	**Obj Strk:**										
Unit	**2 :** 1	**Alchl/Drgs:** 0	**Speed:** 40 MPH	**Dir:** NW	**Veh Mnvr/Ped Actn:** 4	**Obj Strk:**										
254	**104245298**	21.010	12/10/2014 19:09	SIDESWIPE, SAME DIRECTION	$ 1000	0	0	0	0	1	4	1	3	0	0	1
Unit	**1 :** 1	**Alchl/Drgs:** 7	**Speed:** 45 MPH	**Dir:** W	**Veh Mnvr/Ped Actn:** 5	**Obj Strk:**										
Unit	**2 :** 4	**Alchl/Drgs:** 0	**Speed:** 55 MPH	**Dir:** W	**Veh Mnvr/Ped Actn:** 4	**Obj Strk:**										
255	**104351076**	21.010	04/16/2015 07:35	SIDESWIPE, SAME DIRECTION	$ 2000	0	0	0	0	1	1	1	1	0	0	
Unit	**1 :** 1	**Alchl/Drgs:** 0	**Speed:** 60 MPH	**Dir:** E	**Veh Mnvr/Ped Actn:** 5	**Obj Strk:**										
Unit	**2 :** 1	**Alchl/Drgs:** 0	**Speed:** 55 MPH	**Dir:** E	**Veh Mnvr/Ped Actn:** 4	**Obj Strk:**										
256	**104420804**	21.010	06/26/2015 18:04	REAR END, SLOW OR STOP	$ 4300	0	0	0	0	1	1	1	1	0	0	
Unit	**1 :** 1	**Alchl/Drgs:** 3	**Speed:** 10 MPH	**Dir:** E	**Veh Mnvr/Ped Actn:** 4	**Obj Strk:**										
Unit	**2 :** 1	**Alchl/Drgs:** 0	**Speed:** 10 MPH	**Dir:** E	**Veh Mnvr/Ped Actn:** 1	**Obj Strk:**										
257	**104526787**	21.010	10/20/2015 18:02	REAR END, SLOW OR STOP	$ 18500	0	0	0	0	1	1	1	1	0	0	
Unit	**1 :** 4	**Alchl/Drgs:** 0	**Speed:** 40 MPH	**Dir:** W	**Veh Mnvr/Ped Actn:** 4	**Obj Strk:**										
Unit	**2 :** 2	**Alchl/Drgs:** 0	**Speed:** 35 MPH	**Dir:** W	**Veh Mnvr/Ped Actn:** 11	**Obj Strk:**										
Unit	**3 :** 32	**Alchl/Drgs:** 0	**Speed:** 35 MPH	**Dir:** E	**Veh Mnvr/Ped Actn:** 11	**Obj Strk:**										

DocuSign Envelope ID: 5C03745C-4B01-4834-A65D-B77F558A4F46

North Carolina Department of Transportation
Traffic Engineering Accident Analysis System
Strip Analysis Report

Acc No	Crash ID	Milepost	Date	Accident Type	Total Damage	Injuries F	A	B	C	Condition R	L	W	Road Ch	Ci	Trfc Ctl Dv	Op
258	**104593027**	21.010	12/20/2015 09:31	BACKING UP	$ 1200	0	0	0	0	1	1	1	1	0	0	
Unit	**1 :** 1	**Alchl/Drgs:** 7	**Speed:** 5 MPH	**Dir:** S	**Veh Mnvr/Ped Actn:** 10	**Obj Strk:**										
Unit	**2 :** 1	**Alchl/Drgs:** 7	**Speed:** 0 MPH	**Dir:** N	**Veh Mnvr/Ped Actn:** 2	**Obj Strk:**										
259	**104672587**	21.010	03/11/2016 15:31	REAR END, SLOW OR STOP	$ 10000	0	0	0	1	1	1	2	1	0	0	
Unit	**1 :** 1	**Alchl/Drgs:** 0	**Speed:** 30 MPH	**Dir:** N	**Veh Mnvr/Ped Actn:** 4	**Obj Strk:**										
Unit	**2 :** 2	**Alchl/Drgs:** 0	**Speed:** 0 MPH	**Dir:** N	**Veh Mnvr/Ped Actn:** 1	**Obj Strk:**										
260	**104730949**	21.010	05/11/2016 10:19	SIDESWIPE, SAME DIRECTION	$ 2000	0	0	0	0	2	1	3	1	0	0	
Unit	**1 :** 1	**Alchl/Drgs:** 0	**Speed:** 10 MPH	**Dir:** E	**Veh Mnvr/Ped Actn:** 5	**Obj Strk:**										
Unit	**2 :** 1	**Alchl/Drgs:** 0	**Speed:** 55 MPH	**Dir:** E	**Veh Mnvr/Ped Actn:** 4	**Obj Strk:**										
Unit	**3 :** 4	**Alchl/Drgs:** 0	**Speed:** 55 MPH	**Dir:** E	**Veh Mnvr/Ped Actn:** 4	**Obj Strk:**										
261	**104750969**	21.010	05/30/2016 17:13	REAR END, SLOW OR STOP	$ 13300	0	0	0	0	1	1	1	1	0	0	
Unit	**1 :** 4	**Alchl/Drgs:** 0	**Speed:** 45 MPH	**Dir:** E	**Veh Mnvr/Ped Actn:** 4	**Obj Strk:**										
Unit	**2 :** 1	**Alchl/Drgs:** 0	**Speed:** 45 MPH	**Dir:** E	**Veh Mnvr/Ped Actn:** 1	**Obj Strk:**										
Unit	**3 :** 1	**Alchl/Drgs:** 0	**Speed:** 45 MPH	**Dir:** E	**Veh Mnvr/Ped Actn:** 1	**Obj Strk:**										
262	**104974262**	21.010	01/12/2017 08:44	REAR END, SLOW OR STOP	$ 5300	0	0	0	0	2	1	2	7	0	0	
Unit	**1 :** 2	**Alchl/Drgs:** 0	**Speed:** 40 MPH	**Dir:** N	**Veh Mnvr/Ped Actn:** 4	**Obj Strk:**										
Unit	**2 :** 1	**Alchl/Drgs:** 0	**Speed:** 0 MPH	**Dir:** N	**Veh Mnvr/Ped Actn:** 1	**Obj Strk:**										
Unit	**3 :** 3	**Alchl/Drgs:** 0	**Speed:** 0 MPH	**Dir:** N	**Veh Mnvr/Ped Actn:** 1	**Obj Strk:**										
263	**105014510**	21.010	02/20/2017 10:27	REAR END, SLOW OR STOP	$ 7000	0	0	1	1	1	1	1	1	0	0	
Unit	**1 :** 14	**Alchl/Drgs:** 0	**Speed:** 55 MPH	**Dir:** N	**Veh Mnvr/Ped Actn:** 4	**Obj Strk:**										
Unit	**2 :** 1	**Alchl/Drgs:** 0	**Speed:** 55 MPH	**Dir:** N	**Veh Mnvr/Ped Actn:** 11	**Obj Strk:**										
264	**105188103**	21.010	08/10/2017 17:42	REAR END, SLOW OR STOP	$ 8500	0	0	0	2	1	1	2	3	0	0	
Unit	**1 :** 4	**Alchl/Drgs:** 0	**Speed:** 45 MPH	**Dir:** E	**Veh Mnvr/Ped Actn:** 4	**Obj Strk:**										
Unit	**2 :** 4	**Alchl/Drgs:** 0	**Speed:** 45 MPH	**Dir:** E	**Veh Mnvr/Ped Actn:** 1	**Obj Strk:**										
Unit	**3 :** 29	**Alchl/Drgs:** 0	**Speed:** 45 MPH	**Dir:** E	**Veh Mnvr/Ped Actn:** 1	**Obj Strk:**										
265	**105206518**	21.010	08/30/2017 09:54	REAR END, SLOW OR STOP	$ 7000	0	0	0	0	1	1	1	1	0	0	
Unit	**1 :** 1	**Alchl/Drgs:** 0	**Speed:** 60 MPH	**Dir:** E	**Veh Mnvr/Ped Actn:** 4	**Obj Strk:**										
Unit	**2 :** 1	**Alchl/Drgs:** 0	**Speed:** 60 MPH	**Dir:** E	**Veh Mnvr/Ped Actn:** 1	**Obj Strk:**										

DocuSign Envelope ID: 5C03745C-4B01-4834-A65D-B77F558A4F46

North Carolina Department of Transportation
Traffic Engineering Accident Analysis System
Strip Analysis Report

Acc No	Crash ID	Milepost	Date	Accident Type	Total Damage	Injuries F	A	B	C	Condition R	L	W	Road Ch	Ci	Trfc Ctl Dv	Op
266	**105329035**	21.010	12/14/2017 17:05	SIDESWIPE, SAME DIRECTION	$ 15000	0	0	0	0	1	1	1	1	0	0	
Unit	**1 :** 2	**Alchl/Drgs:** 0	**Speed:** 5 MPH	**Dir:** W	**Veh Mnvr/Ped Actn:** 4	**Obj Strk:**										
Unit	**2 :** 2	**Alchl/Drgs:** 7	**Speed:** 5 MPH	**Dir:** W	**Veh Mnvr/Ped Actn:** 16	**Obj Strk:**										
267	**105351578**	21.010	01/12/2018 17:22	REAR END, SLOW OR STOP	$ 4000	0	0	0	0	1	1	2	1	0	0	
Unit	**1 :** 1	**Alchl/Drgs:** 0	**Speed:** 20 MPH	**Dir:** E	**Veh Mnvr/Ped Actn:** 4	**Obj Strk:**										
Unit	**2 :** 1	**Alchl/Drgs:** 0	**Speed:** 35 MPH	**Dir:** E	**Veh Mnvr/Ped Actn:** 1	**Obj Strk:**										
Unit	**3 :** 1	**Alchl/Drgs:** 0	**Speed:** 35 MPH	**Dir:** E	**Veh Mnvr/Ped Actn:** 1	**Obj Strk:**										
268	**105586066**	21.010	08/16/2018 14:55	REAR END, SLOW OR STOP	$ 5000	0	0	0	0	1	1	1	2	0	0	1
Unit	**1 :** 1	**Alchl/Drgs:** 0	**Speed:** 35 MPH	**Dir:** E	**Veh Mnvr/Ped Actn:** 4	**Obj Strk:**										
Unit	**2 :** 10	**Alchl/Drgs:** 0	**Speed:** 30 MPH	**Dir:** E	**Veh Mnvr/Ped Actn:** 4	**Obj Strk:**										
269	**105608351**	21.010	09/20/2018 09:11	REAR END, SLOW OR STOP	$ 8700	0	0	0	0	1	1	1	1	0	0	
Unit	**1 :** 2	**Alchl/Drgs:** 0	**Speed:** 75 MPH	**Dir:** N	**Veh Mnvr/Ped Actn:** 4	**Obj Strk:**										
Unit	**2 :** 4	**Alchl/Drgs:** 0	**Speed:** 60 MPH	**Dir:** N	**Veh Mnvr/Ped Actn:** 4	**Obj Strk:**									44	
270	**105674536**	21.010	11/13/2018 18:29	REAR END, SLOW OR STOP	$ 29500	0	0	0	3	1	5	2	1	0	0	
Unit	**1 :** 4	**Alchl/Drgs:** 0	**Speed:** 55 MPH	**Dir:** E	**Veh Mnvr/Ped Actn:** 1	**Obj Strk:**										
Unit	**2 :** 4	**Alchl/Drgs:** 0	**Speed:** 50 MPH	**Dir:** E	**Veh Mnvr/Ped Actn:** 1	**Obj Strk:**										
Unit	**3 :** 1	**Alchl/Drgs:** 0	**Speed:** 60 MPH	**Dir:** E	**Veh Mnvr/Ped Actn:** 1	**Obj Strk:**										
Unit	**4 :** 14	**Alchl/Drgs:** 0	**Speed:** 55 MPH	**Dir:** E	**Veh Mnvr/Ped Actn:** 4	**Obj Strk:**										
271	**104954134**	21.054	12/15/2016 17:37	REAR END, SLOW OR STOP	$ 5000	0	0	0	0	1	5	1	1	0	0	
Unit	**1 :** 1	**Alchl/Drgs:** 0	**Speed:** 20 MPH	**Dir:** E	**Veh Mnvr/Ped Actn:** 4	**Obj Strk:**										
Unit	**2 :** 4	**Alchl/Drgs:** 0	**Speed:** 20 MPH	**Dir:** E	**Veh Mnvr/Ped Actn:** 1	**Obj Strk:**										
272	**104029990**	21.057	04/02/2014 14:45	FIXED OBJECT	$ 1200	0	0	0	0	1	1	1	3	0	0	
Unit	**1 :** 14	**Alchl/Drgs:** 0	**Speed:** 55 MPH	**Dir:** S	**Veh Mnvr/Ped Actn:** 5	**Obj Strk:**										
Unit	**2 :** 4	**Alchl/Drgs:** 0	**Speed:** 55 MPH	**Dir:** S	**Veh Mnvr/Ped Actn:** 4	**Obj Strk:**									44	
273	**104852395**	21.057	09/14/2016 17:32	REAR END, SLOW OR STOP	$ 6000	0	0	0	0	1	1	1	1	0	0	
Unit	**1 :** 1	**Alchl/Drgs:** 0	**Speed:** 20 MPH	**Dir:** S	**Veh Mnvr/Ped Actn:** 5	**Obj Strk:**										
Unit	**2 :** 11	**Alchl/Drgs:** 0	**Speed:** 25 MPH	**Dir:** S	**Veh Mnvr/Ped Actn:** 11	**Obj Strk:**										
274	**104957423**	21.057	12/22/2016 17:51	REAR END, SLOW OR STOP	$ 1500	0	0	0	0	1	5	1	1	0	0	
Unit	**1 :** 1	**Alchl/Drgs:** 0	**Speed:** 35 MPH	**Dir:** E	**Veh Mnvr/Ped Actn:** 4	**Obj Strk:**										

All data presented in this report comes explicitly from the Traffic Engineering Accident Analysis System based upon va criteria provided by the report's creator. The onus is strictly upon the user of this report to exercise due diligence in in and further representing this data.

DocuSign Envelope ID: 5C03745C-4B01-4834-A65D-B77F558A4F46

North Carolina Department of Transportation
Traffic Engineering Accident Analysis System
Strip Analysis Report

Acc No	Crash ID	Milepost	Date	Accident Type	Total Damage	Injuries F	A	B	C	Condition R	L	W	Road Ch	Ci	Trfc Ctl Dv	Op
Unit	**2 :** 1	**Alchl/Drgs:**	0	**Speed:** 30 MPH	**Dir:** E	**Veh Mnvr/Ped Actn:**				4			**Obj Strk:**			
Unit	**3 :** 4	**Alchl/Drgs:**	0	**Speed:** 15 MPH	**Dir:** E	**Veh Mnvr/Ped Actn:**				11			**Obj Strk:**			
275	**105215454**	21.057	09/09/2017 19:42	REAR END, SLOW OR STOP	$ 600	0	0	0	0	1	5	1	1	0	0	
Unit	**1 :** 1	**Alchl/Drgs:**	0	**Speed:** 5 MPH	**Dir:** E	**Veh Mnvr/Ped Actn:**				4			**Obj Strk:**			
Unit	**2 :** 4	**Alchl/Drgs:**	0	**Speed:** 0 MPH	**Dir:** E	**Veh Mnvr/Ped Actn:**				1			**Obj Strk:**			
276	**105299213**	21.057	11/22/2017 13:43	REAR END, SLOW OR STOP	$ 5000	0	0	0	0	1	1	1	1	0	0	
Unit	**1 :** 1	**Alchl/Drgs:**	3	**Speed:** 35 MPH	**Dir:** E	**Veh Mnvr/Ped Actn:**				4			**Obj Strk:**			
Unit	**2 :** 5	**Alchl/Drgs:**	0	**Speed:** 25 MPH	**Dir:** E	**Veh Mnvr/Ped Actn:**				11			**Obj Strk:**			
277	**105525813**	21.057	06/28/2018 08:24	REAR END, SLOW OR STOP	$ 5100	0	0	0	0	2	1	2	1	0	0	
Unit	**1 :** 1	**Alchl/Drgs:**	0	**Speed:** 45 MPH	**Dir:** S	**Veh Mnvr/Ped Actn:**				4			**Obj Strk:**			
Unit	**2 :** 2	**Alchl/Drgs:**	0	**Speed:** 40 MPH	**Dir:** S	**Veh Mnvr/Ped Actn:**				1			**Obj Strk:**			
Unit	**3 :** 1	**Alchl/Drgs:**	0	**Speed:** 40 MPH	**Dir:** S	**Veh Mnvr/Ped Actn:**				1			**Obj Strk:**			
278	**104804057**	21.060	07/24/2016 15:09	SIDESWIPE, SAME DIRECTION	$ 3800	0	0	0	1	1	1	1	3	0	0	
Unit	**1 :** 1	**Alchl/Drgs:**	0	**Speed:** 60 MPH	**Dir:** E	**Veh Mnvr/Ped Actn:**				4			**Obj Strk:**			
Unit	**2 :** 5	**Alchl/Drgs:**	0	**Speed:** 60 MPH	**Dir:** E	**Veh Mnvr/Ped Actn:**				4			**Obj Strk:**			
279	**105454216**	21.062	04/19/2018 16:06	REAR END, SLOW OR STOP	$ 9000	0	0	0	0	1	1	1	3	0	0	
Unit	**1 :** 2	**Alchl/Drgs:**	0	**Speed:** 40 MPH	**Dir:** W	**Veh Mnvr/Ped Actn:**				4			**Obj Strk:**			
Unit	**2 :** 2	**Alchl/Drgs:**	0	**Speed:** 40 MPH	**Dir:** W	**Veh Mnvr/Ped Actn:**				11			**Obj Strk:**			
280	**104046147**	21.110	05/01/2014 07:43	REAR END, SLOW OR STOP	$ 5500	0	0	0	0	1	1	1	1	0	0	
Unit	**1 :** 4	**Alchl/Drgs:**	0	**Speed:** 60 MPH	**Dir:** E	**Veh Mnvr/Ped Actn:**				4			**Obj Strk:**			
Unit	**2 :** 2	**Alchl/Drgs:**	0	**Speed:** 55 MPH	**Dir:** E	**Veh Mnvr/Ped Actn:**				11			**Obj Strk:**			
281	**104257947**	21.110	12/31/2014 15:30	REAR END, SLOW OR STOP	$ 6550	0	0	0	2	1	1	1	3	0	0	
Unit	**1 :** 4	**Alchl/Drgs:**	0	**Speed:** 55 MPH	**Dir:** W	**Veh Mnvr/Ped Actn:**				4			**Obj Strk:**			
Unit	**2 :** 4	**Alchl/Drgs:**	0	**Speed:** 55 MPH	**Dir:** W	**Veh Mnvr/Ped Actn:**				11			**Obj Strk:**			
Unit	**3 :** 4	**Alchl/Drgs:**	0	**Speed:** 55 MPH	**Dir:** W	**Veh Mnvr/Ped Actn:**				11			**Obj Strk:**			
282	**105224079**	21.110	09/17/2017 16:38	REAR END, SLOW OR STOP	$ 800	0	0	0	0	1	1	1	1	0	0	
Unit	**1 :** 1	**Alchl/Drgs:**	0	**Speed:** 10 MPH	**Dir:** E	**Veh Mnvr/Ped Actn:**				11			**Obj Strk:**			
Unit	**2 :** 1	**Alchl/Drgs:**	0	**Speed:** 10 MPH	**Dir:** E	**Veh Mnvr/Ped Actn:**				11			**Obj Strk:**			

DocuSign Envelope ID: 5C03745C-4B01-4834-A65D-B77F558A4F46

North Carolina Department of Transportation
Traffic Engineering Accident Analysis System
Strip Analysis Report

Acc No	Crash ID	Milepost	Date	Accident Type	Total Damage	Injuries F	A	B	C	Condition R	L	W	Road Ch	Ci	Trfc Ctl Dv	Op
283	**105492908**	21.110	05/29/2018 06:55	MOVABLE OBJECT	$ 1000	0	0	0	0	2	3	3	1	0	0	
Unit	**1 :** 14	**Alchl/Drgs:** 0	**Speed:** 55 MPH	**Dir:** N	**Veh Mnvr/Ped Actn:** 4					**Obj Strk:** 33						
284	**105708927**	21.110	12/13/2018 18:21	REAR END, SLOW OR STOP	$ 12500	0	0	1	1	1	5	1	3	0	0	
Unit	**1 :** 1	**Alchl/Drgs:** 0	**Speed:** 45 MPH	**Dir:** E	**Veh Mnvr/Ped Actn:** 1					**Obj Strk:**						
Unit	**2 :** 2	**Alchl/Drgs:** 0	**Speed:** 45 MPH	**Dir:** E	**Veh Mnvr/Ped Actn:** 1					**Obj Strk:**						
Unit	**3 :** 1	**Alchl/Drgs:** 0	**Speed:** 45 MPH	**Dir:** E	**Veh Mnvr/Ped Actn:** 4					**Obj Strk:**						
285	**105036910**	21.138	03/03/2017 07:52	RAN OFF ROAD - LEFT	$ 2000	0	0	0	0	1	1	1	1	0	0	2
Unit	**1 :** 1	**Alchl/Drgs:** 0	**Speed:** 55 MPH	**Dir:** W	**Veh Mnvr/Ped Actn:** 4					**Obj Strk:** 44						
286	**105337343**	21.138	12/13/2017 19:34	REAR END, SLOW OR STOP	$ 24500	0	0	0	1	1	4	1	1	0		2
Unit	**1 :** 4	**Alchl/Drgs:** 0	**Speed:** 50 MPH	**Dir:** W	**Veh Mnvr/Ped Actn:** 4					**Obj Strk:**						
Unit	**2 :** 2	**Alchl/Drgs:** 0	**Speed:** 0 MPH	**Dir:** W	**Veh Mnvr/Ped Actn:** 1					**Obj Strk:**						
287	**104257971**	21.154	01/03/2015 15:19	FIXED OBJECT	$ 2500	0	0	0	0	2	1	2	1	0	0	
Unit	**1 :** 1	**Alchl/Drgs:** 0	**Speed:** 55 MPH	**Dir:** N	**Veh Mnvr/Ped Actn:** 4					**Obj Strk:** 44						
288	**104396731**	21.154	06/03/2015 18:10	REAR END, SLOW OR STOP	$ 2600	0	0	0	0	1	1	2	1	0	0	
Unit	**1 :** 1	**Alchl/Drgs:** 0	**Speed:** 40 MPH	**Dir:** E	**Veh Mnvr/Ped Actn:** 4					**Obj Strk:**						
Unit	**2 :** 2	**Alchl/Drgs:** 0	**Speed:** 40 MPH	**Dir:** E	**Veh Mnvr/Ped Actn:** 11					**Obj Strk:**						
289	**105685744**	21.154	11/21/2018 09:42	REAR END, SLOW OR STOP	$ 1200	0	0	0	0	1	1	1	5	0	0	
Unit	**1 :** 1	**Alchl/Drgs:** 0	**Speed:** 60 MPH	**Dir:** W	**Veh Mnvr/Ped Actn:** 4					**Obj Strk:**						
Unit	**2 :** 4	**Alchl/Drgs:** 0	**Speed:** 60 MPH	**Dir:** W	**Veh Mnvr/Ped Actn:** 1					**Obj Strk:**						
290	**104852478**	21.157	09/15/2016 16:12	REAR END, SLOW OR STOP	$ 7000	0	0	0	0	1	1	1	1	0	0	
Unit	**1 :** 1	**Alchl/Drgs:** 0	**Speed:** 0 MPH	**Dir:** E	**Veh Mnvr/Ped Actn:** 4					**Obj Strk:**						
Unit	**2 :** 4	**Alchl/Drgs:** 0	**Speed:** 55 MPH	**Dir:** E	**Veh Mnvr/Ped Actn:** 4					**Obj Strk:**						
291	**104605712**	21.190	11/25/2015 11:41	REAR END, SLOW OR STOP	$ 1000	0	0	0	0	1	1	1	1	0		1
Unit	**1 :** 2	**Alchl/Drgs:** 7	**Speed:** 25 MPH	**Dir:** W	**Veh Mnvr/Ped Actn:** 4					**Obj Strk:**						
Unit	**2 :** 5	**Alchl/Drgs:** 0	**Speed:** 0 MPH	**Dir:** W	**Veh Mnvr/Ped Actn:** 1					**Obj Strk:**						
292	**104811041**	21.210	08/05/2016 10:53	REAR END, SLOW OR STOP	$ 4500	0	0	0	0	1	1	1	1	0	0	
Unit	**1 :** 2	**Alchl/Drgs:** 0	**Speed:** 40 MPH	**Dir:** W	**Veh Mnvr/Ped Actn:** 4					**Obj Strk:**						

DocuSign Envelope ID: 5C03745C-4B01-4834-A65D-B77F558A4F46

North Carolina Department of Transportation
Traffic Engineering Accident Analysis System
Strip Analysis Report

Acc No	Crash ID	Milepost	Date	Accident Type	Total Damage	Injuries F	A	B	C	Condition R	L	W	Road Ch	Ci	Trfc Ctl Dv	Op
Unit	**2 :** 4	**Alchl/Drgs:**	0	**Speed:** 40 MPH	**Dir:** W	**Veh Mnvr/Ped Actn:**				11			**Obj Strk:**			
293	**105152018**	21.210	07/05/2017 13:17	REAR END, SLOW OR STOP	$ 3500	0	0	0	0	1	1	2	3	0	0	
Unit	**1 :** 14	**Alchl/Drgs:**	0	**Speed:** 60 MPH	**Dir:** E	**Veh Mnvr/Ped Actn:**				4			**Obj Strk:**			
Unit	**2 :** 5	**Alchl/Drgs:**	0	**Speed:** 60 MPH	**Dir:** E	**Veh Mnvr/Ped Actn:**				11			**Obj Strk:**			
294	**105602234**	21.210	09/13/2018 15:30	SIDESWIPE, SAME DIRECTION	$ 3550	0	0	0	1	1	1	2	7	0	0	
Unit	**1 :** 1	**Alchl/Drgs:**	0	**Speed:** 60 MPH	**Dir:** W	**Veh Mnvr/Ped Actn:**				4			**Obj Strk:**	44		
Unit	**2 :** 2	**Alchl/Drgs:**	0	**Speed:** 60 MPH	**Dir:** W	**Veh Mnvr/Ped Actn:**				4			**Obj Strk:**			
295	**105696892**	21.235	12/03/2018 20:13	ANIMAL	$ 3500	0	0	0	0	1	5	1	1	0	0	
Unit	**1 :** 1	**Alchl/Drgs:**	0	**Speed:** 60 MPH	**Dir:** E	**Veh Mnvr/Ped Actn:**				4			**Obj Strk:**	17		
296	**104298758**	21.257	02/13/2015 17:47	REAR END, SLOW OR STOP	$ 3800	0	0	0	0	1	1	1	1	0	0	
Unit	**1 :** 1	**Alchl/Drgs:**	0	**Speed:** 35 MPH	**Dir:** E	**Veh Mnvr/Ped Actn:**				4			**Obj Strk:**			
Unit	**2 :** 1	**Alchl/Drgs:**	0	**Speed:** 10 MPH	**Dir:** E	**Veh Mnvr/Ped Actn:**				11			**Obj Strk:**			
297	**104413945**	21.257	06/05/2015 18:37	REAR END, SLOW OR STOP	$ 1800	0	0	0	0	1	1	1	1	0	0	1
Unit	**1 :** 1	**Alchl/Drgs:**	0	**Speed:** 20 MPH	**Dir:** E	**Veh Mnvr/Ped Actn:**				4			**Obj Strk:**			
Unit	**2 :** 1	**Alchl/Drgs:**	0	**Speed:** 10 MPH	**Dir:** E	**Veh Mnvr/Ped Actn:**				11			**Obj Strk:**			
Unit	**3 :** 1	**Alchl/Drgs:**	0	**Speed:** 5 MPH	**Dir:** E	**Veh Mnvr/Ped Actn:**				11			**Obj Strk:**			
298	**104486123**	21.257	09/09/2015 10:46	MOVABLE OBJECT	$ 1500	0	0	0	0	1	1	2	1	0	0	
Unit	**1 :** 14	**Alchl/Drgs:**	0	**Speed:** 60 MPH	**Dir:** S	**Veh Mnvr/Ped Actn:**				4			**Obj Strk:**	18		
Unit	**2 :** 1	**Alchl/Drgs:**	0	**Speed:** 60 MPH	**Dir:** S	**Veh Mnvr/Ped Actn:**				4			**Obj Strk:**			
299	**104588123**	21.257	12/16/2015 08:33	REAR END, SLOW OR STOP	$ 2200	0	0	0	0	1	1	1	1	0	0	
Unit	**1 :** 4	**Alchl/Drgs:**	0	**Speed:** 60 MPH	**Dir:** W	**Veh Mnvr/Ped Actn:**				4			**Obj Strk:**			
Unit	**2 :** 4	**Alchl/Drgs:**	0	**Speed:** 60 MPH	**Dir:** W	**Veh Mnvr/Ped Actn:**				11			**Obj Strk:**			
300	**104657516**	21.257	02/24/2016 20:00	SIDESWIPE, SAME DIRECTION	$ 1200	0	0	0	0	1	5	1	7	0	0	
Unit	**1 :** 1	**Alchl/Drgs:**	0	**Speed:** 60 MPH	**Dir:** E	**Veh Mnvr/Ped Actn:**				5			**Obj Strk:**			
Unit	**2 :** 2	**Alchl/Drgs:**	0	**Speed:** 60 MPH	**Dir:** E	**Veh Mnvr/Ped Actn:**				4			**Obj Strk:**			
301	**104866448**	21.257	10/02/2016 08:49	SIDESWIPE, SAME DIRECTION	$ 1000	0	0	0	0	1	1	1	1	0	0	
Unit	**1 :** 1	**Alchl/Drgs:**	0	**Speed:** 60 MPH	**Dir:** W	**Veh Mnvr/Ped Actn:**				5			**Obj Strk:**			
Unit	**2 :** 4	**Alchl/Drgs:**	0	**Speed:** 60 MPH	**Dir:** W	**Veh Mnvr/Ped Actn:**				4			**Obj Strk:**			

DocuSign Envelope ID: 5C03745C-4B01-4834-A65D-B77F558A4F46

North Carolina Department of Transportation
Traffic Engineering Accident Analysis System
Strip Analysis Report

Acc No	Crash ID	Milepost	Date	Accident Type	Total Damage	Injuries F	A	B	C	Condition R	L	W	Road Ch	Ci	Trfc Ctl Dv	Op
302	**104904066**	21.257	11/04/2016 14:02	REAR END, SLOW OR STOP	$ 15000	0	0	0	1	1	1	1	1	0	0	
Unit	**1 :** 5	**Alchl/Drgs:** 0	**Speed:** 60 MPH	**Dir:** W	**Veh Mnvr/Ped Actn:** 4	**Obj Strk:** 44										
Unit	**2 :** 1	**Alchl/Drgs:** 0	**Speed:** 60 MPH	**Dir:** W	**Veh Mnvr/Ped Actn:** 11	**Obj Strk:** 44										
303	**104942560**	21.257	12/05/2016 17:37	REAR END, SLOW OR STOP	$ 6000	0	0	0	0	2	5	3	1	0	0	
Unit	**1 :** 4	**Alchl/Drgs:** 0	**Speed:** 30 MPH	**Dir:** E	**Veh Mnvr/Ped Actn:** 4	**Obj Strk:**										
Unit	**2 :** 4	**Alchl/Drgs:** 0	**Speed:** 30 MPH	**Dir:** E	**Veh Mnvr/Ped Actn:** 11	**Obj Strk:**										
304	**105181865**	21.257	08/06/2017 15:18	REAR END, SLOW OR STOP	$ 9500	0	0	2	0	1	1	1	1	0	0	
Unit	**1 :** 2	**Alchl/Drgs:** 7	**Speed:** 50 MPH	**Dir:** E	**Veh Mnvr/Ped Actn:** 4	**Obj Strk:**										
Unit	**2 :** 4	**Alchl/Drgs:** 0	**Speed:** 0 MPH	**Dir:** E	**Veh Mnvr/Ped Actn:** 1	**Obj Strk:**										
305	**105181866**	21.257	08/06/2017 15:55	REAR END, SLOW OR STOP	$ 6000	0	0	0	0	1	1	1	1	0	0	
Unit	**1 :** 4	**Alchl/Drgs:** 0	**Speed:** 45 MPH	**Dir:** E	**Veh Mnvr/Ped Actn:** 4	**Obj Strk:**										
Unit	**2 :** 1	**Alchl/Drgs:** 0	**Speed:** 10 MPH	**Dir:** E	**Veh Mnvr/Ped Actn:** 11	**Obj Strk:**										
306	**105254756**	21.257	10/15/2017 15:08	REAR END, SLOW OR STOP	$ 5400	0	0	0	0	1	1	1	1	0	0	
Unit	**1 :** 1	**Alchl/Drgs:** 0	**Speed:** 45 MPH	**Dir:** E	**Veh Mnvr/Ped Actn:** 4	**Obj Strk:**										
Unit	**2 :** 1	**Alchl/Drgs:** 0	**Speed:** 0 MPH	**Dir:** E	**Veh Mnvr/Ped Actn:** 1	**Obj Strk:**										
Unit	**3 :** 1	**Alchl/Drgs:** 0	**Speed:** 0 MPH	**Dir:** E	**Veh Mnvr/Ped Actn:** 1	**Obj Strk:**										
307	**105286642**	21.257	11/10/2017 17:55	REAR END, SLOW OR STOP	$ 3500	0	0	0	0	1	5	1	1	0	0	
Unit	**1 :** 4	**Alchl/Drgs:** 0	**Speed:** 55 MPH	**Dir:** E	**Veh Mnvr/Ped Actn:** 4	**Obj Strk:**										
Unit	**2 :** 1	**Alchl/Drgs:** 0	**Speed:** 0 MPH	**Dir:** E	**Veh Mnvr/Ped Actn:** 1	**Obj Strk:**										
308	**105334495**	21.257	12/26/2017 16:34	REAR END, SLOW OR STOP	$ 7000	0	0	1	0	1	1	1	1	0	0	
Unit	**1 :** 1	**Alchl/Drgs:** 0	**Speed:** 55 MPH	**Dir:** E	**Veh Mnvr/Ped Actn:** 4	**Obj Strk:**										
Unit	**2 :** 2	**Alchl/Drgs:** 0	**Speed:** 0 MPH	**Dir:** E	**Veh Mnvr/Ped Actn:** 1	**Obj Strk:**										
309	**105407022**	21.257	03/11/2018 00:28	FIXED OBJECT	$ 10000	0	0	1	0	1	5	1	1	0	0	
Unit	**1 :** 1	**Alchl/Drgs:** 0	**Speed:** 60 MPH	**Dir:** E	**Veh Mnvr/Ped Actn:** 4	**Obj Strk:** 42										
310	**105492170**	21.257	05/25/2018 16:26	REAR END, SLOW OR STOP	$ 4500	0	0	0	0	1	1	1	1	0	0	
Unit	**1 :** 1	**Alchl/Drgs:** 0	**Speed:** 55 MPH	**Dir:** E	**Veh Mnvr/Ped Actn:** 4	**Obj Strk:**										
Unit	**2 :** 4	**Alchl/Drgs:** 0	**Speed:** 5 MPH	**Dir:** E	**Veh Mnvr/Ped Actn:** 11	**Obj Strk:**										

All data presented in this report comes explicitly from the Traffic Engineering Accident Analysis System based upon va criteria provided by the report's creator. The onus is strictly upon the user of this report to exercise due diligence in in and further representing this data.

DocuSign Envelope ID: 5C03745C-4B01-4834-A65D-B77F558A4F46

North Carolina Department of Transportation
Traffic Engineering Accident Analysis System
Strip Analysis Report

Acc No	Crash ID	Milepost	Date	Accident Type	Total Damage	Injuries F	A	B	C	Condition R	L	W	Road Ch	Ci	Trfc Ctl Dv	Op
311	**105542842**	21.257	07/15/2018 11:42	REAR END, SLOW OR STOP	$ 9000	0	0	0	3	1	1	1	1	0	0	
Unit	**1 :** 1	**Alchl/Drgs:** 0	**Speed:** 55 MPH	**Dir:** N	**Veh Mnvr/Ped Actn:** 4	**Obj Strk:**										
Unit	**2 :** 4	**Alchl/Drgs:** 0	**Speed:** 55 MPH	**Dir:** N	**Veh Mnvr/Ped Actn:** 11	**Obj Strk:**										
312	**105583030**	21.257	08/22/2018 18:00	REAR END, SLOW OR STOP	$ 1500	0	0	0	0	1	1	1	1	0	0	
Unit	**1 :** 14	**Alchl/Drgs:** 0	**Speed:** 10 MPH	**Dir:** E	**Veh Mnvr/Ped Actn:** 4	**Obj Strk:**										
Unit	**2 :** 1	**Alchl/Drgs:** 0	**Speed:** 0 MPH	**Dir:** E	**Veh Mnvr/Ped Actn:** 1	**Obj Strk:**										
313	**104359189**	21.260	04/24/2015 15:21	REAR END, SLOW OR STOP	$ 2500	0	0	0	0	1	1	1	3	0	0	
Unit	**1 :** 1	**Alchl/Drgs:** 0	**Speed:** 10 MPH	**Dir:** N	**Veh Mnvr/Ped Actn:** 4	**Obj Strk:**										
Unit	**2 :** 1	**Alchl/Drgs:** 0	**Speed:** 0 MPH	**Dir:** N	**Veh Mnvr/Ped Actn:** 1	**Obj Strk:**										
314	**105139037**	21.262	06/20/2017 17:10	REAR END, SLOW OR STOP	$ 1500	0	0	0	0	1	1	1	1	0	0	
Unit	**1 :** 1	**Alchl/Drgs:** 0	**Speed:** 40 MPH	**Dir:** W	**Veh Mnvr/Ped Actn:** 4	**Obj Strk:**										
Unit	**2 :** 1	**Alchl/Drgs:** 0	**Speed:** 40 MPH	**Dir:** W	**Veh Mnvr/Ped Actn:** 11	**Obj Strk:**										
315	**105286162**	21.262	10/28/2017 12:44	RAN OFF ROAD - RIGHT	$ 1800	0	0	0	0	2	1	3	1	0	0	2
Unit	**1 :** 1	**Alchl/Drgs:** 0	**Speed:** 50 MPH	**Dir:** W	**Veh Mnvr/Ped Actn:** 4	**Obj Strk:** 42										
316	**105378525**	21.262	02/09/2018 15:54	SIDESWIPE, SAME DIRECTION	$ 3500	0	0	0	0	1	1	1	1	0	0	
Unit	**1 :** 14	**Alchl/Drgs:** 0	**Speed:** 45 MPH	**Dir:** W	**Veh Mnvr/Ped Actn:** 4	**Obj Strk:**										
Unit	**2 :** 1	**Alchl/Drgs:** 0	**Speed:** 45 MPH	**Dir:** W	**Veh Mnvr/Ped Actn:** 5	**Obj Strk:**										
317	**105600624**	21.262	09/09/2018 11:42	REAR END, SLOW OR STOP	$ 2000	0	0	0	0	1	5	1	3	0	0	
Unit	**1 :** 2	**Alchl/Drgs:** 0	**Speed:** 60 MPH	**Dir:** W	**Veh Mnvr/Ped Actn:** 4	**Obj Strk:**										
Unit	**2 :** 4	**Alchl/Drgs:** 0	**Speed:** 55 MPH	**Dir:** W	**Veh Mnvr/Ped Actn:** 4	**Obj Strk:**										
318	**104789908**	21.308	07/12/2016 14:27	OVERTURN/ROLLOVER	$ 1500	0	0	1	0	1	1	2	3	0	0	
Unit	**1 :** 20	**Alchl/Drgs:** 0	**Speed:** 60 MPH	**Dir:** W	**Veh Mnvr/Ped Actn:** 4	**Obj Strk:**										
319	**105009493**	21.310	02/13/2017 14:47	SIDESWIPE, SAME DIRECTION	$ 1000	0	0	0	0	1	1	1	3	0	0	
Unit	**1 :** 10	**Alchl/Drgs:** 0	**Speed:** 5 MPH	**Dir:** E	**Veh Mnvr/Ped Actn:** 4	**Obj Strk:**										
Unit	**2 :** 4	**Alchl/Drgs:** 0	**Speed:** 5 MPH	**Dir:** E	**Veh Mnvr/Ped Actn:** 4	**Obj Strk:**										
320	**105337342**	21.310	12/29/2017 14:53	REAR END, SLOW OR STOP	$ 4500	0	0	0	0	1	1	1	3	0	0	
Unit	**1 :** 1	**Alchl/Drgs:** 0	**Speed:** 35 MPH	**Dir:** E	**Veh Mnvr/Ped Actn:** 11	**Obj Strk:** 44										

DocuSign Envelope ID: 5C03745C-4B01-4834-A65D-B77F558A4F46

North Carolina Department of Transportation
Traffic Engineering Accident Analysis System
Strip Analysis Report

Acc No	Crash ID	Milepost	Date	Accident Type	Total Damage	Injuries F	A	B	C	Condition R	L	W	Road Ch	Ci	Trfc Ctl Dv	Op
Unit	**2 :** 5	**Alchl/Drgs:**	0	**Speed:** 35 MPH	**Dir:** E	**Veh Mnvr/Ped Actn:**				1			**Obj Strk:**			
321	**104533380**	21.344	10/28/2015 08:15	REAR END, SLOW OR STOP	$ 5000	0	0	0	0	2	1	2	5	0	0	
Unit	**1 :** 1	**Alchl/Drgs:**	0	**Speed:** 60 MPH	**Dir:** N	**Veh Mnvr/Ped Actn:**				4			**Obj Strk:**			
Unit	**2 :** 1	**Alchl/Drgs:**	0	**Speed:** 50 MPH	**Dir:** N	**Veh Mnvr/Ped Actn:**				11			**Obj Strk:**			
322	**104378131**	21.354	05/15/2015 12:18	REAR END, SLOW OR STOP	$ 9050	0	0	0	2	1	1	2	1	0	0	
Unit	**1 :** 1	**Alchl/Drgs:**	0	**Speed:** 45 MPH	**Dir:** NW	**Veh Mnvr/Ped Actn:**				4			**Obj Strk:**			
Unit	**2 :** 1	**Alchl/Drgs:**	0	**Speed:** 0 MPH	**Dir:** NW	**Veh Mnvr/Ped Actn:**				1			**Obj Strk:**			
323	**104705802**	21.354	04/15/2016 13:28	FIXED OBJECT	$ 5000	0	0	0	0	1	1	1	2	0	0	
Unit	**1 :** 1	**Alchl/Drgs:**	0	**Speed:** 60 MPH	**Dir:** SE	**Veh Mnvr/Ped Actn:**				4			**Obj Strk:**		44	
324	**104718533**	21.354	04/29/2016 11:28	MOVABLE OBJECT	$ 1200	0	0	0	0	1	1	1	3	0	0	
Unit	**1 :** 2	**Alchl/Drgs:**	0	**Speed:** 50 MPH	**Dir:** NW	**Veh Mnvr/Ped Actn:**				4			**Obj Strk:**		18	
Unit	**2 :** 4	**Alchl/Drgs:**	0	**Speed:** 60 MPH	**Dir:** NW	**Veh Mnvr/Ped Actn:**				4			**Obj Strk:**		18	
325	**104718532**	21.354	04/29/2016 11:30	REAR END, SLOW OR STOP	$ 9000	0	0	0	0	1	1	1	3	0	0	
Unit	**1 :** 14	**Alchl/Drgs:**	0	**Speed:** 55 MPH	**Dir:** NW	**Veh Mnvr/Ped Actn:**				4			**Obj Strk:**			
Unit	**2 :** 25	**Alchl/Drgs:**	0	**Speed:** 45 MPH	**Dir:** NW	**Veh Mnvr/Ped Actn:**				11			**Obj Strk:**			
326	**104768863**	21.354	06/20/2016 13:56	REAR END, SLOW OR STOP	$ 4000	0	0	0	0	1	1	1	5	0	0	
Unit	**1 :** 4	**Alchl/Drgs:**	0	**Speed:** 65 MPH	**Dir:** N	**Veh Mnvr/Ped Actn:**				4			**Obj Strk:**			
Unit	**2 :** 1	**Alchl/Drgs:**	0	**Speed:** 60 MPH	**Dir:** N	**Veh Mnvr/Ped Actn:**				11			**Obj Strk:**			
327	**104852477**	21.357	09/15/2016 15:27	REAR END, SLOW OR STOP	$ 10500	0	0	0	0	1	1	1	1	0	0	
Unit	**1 :** 1	**Alchl/Drgs:**	0	**Speed:** 55 MPH	**Dir:** W	**Veh Mnvr/Ped Actn:**				4			**Obj Strk:**			
Unit	**2 :** 1	**Alchl/Drgs:**	0	**Speed:** 0 MPH	**Dir:** W	**Veh Mnvr/Ped Actn:**				1			**Obj Strk:**			
328	**104873129**	21.362	10/05/2016 16:11	REAR END, SLOW OR STOP	$ 7000	0	0	0	0	1	1	1	1	0	0	
Unit	**1 :** 5	**Alchl/Drgs:**	0	**Speed:** 50 MPH	**Dir:** W	**Veh Mnvr/Ped Actn:**				5			**Obj Strk:**			
Unit	**2 :** 4	**Alchl/Drgs:**	0	**Speed:** 50 MPH	**Dir:** W	**Veh Mnvr/Ped Actn:**				11			**Obj Strk:**			
329	**105663214**	21.390	11/06/2018 07:37	REAR END, SLOW OR STOP	$ 6000	0	0	0	1	3	1	3	1	0	0	
Unit	**1 :** 4	**Alchl/Drgs:**	0	**Speed:** 35 MPH	**Dir:** W	**Veh Mnvr/Ped Actn:**				11			**Obj Strk:**			
Unit	**2 :** 1	**Alchl/Drgs:**	0	**Speed:** 40 MPH	**Dir:** W	**Veh Mnvr/Ped Actn:**				4			**Obj Strk:**			

DocuSign Envelope ID: 5C03745C-4B01-4834-A65D-B77F558A4F46

North Carolina Department of Transportation
Traffic Engineering Accident Analysis System
Strip Analysis Report

Acc No	Crash ID	Milepost	Date	Accident Type	Total Damage	Injuries F	A	B	C	Condition R	L	W	Road Ch	Ci	Trfc Ctl Dv	Op
330	**104251358**	21.410	12/23/2014 17:19	REAR END, SLOW OR STOP	$ 9900	0	0	0	0	2	5	3	1	0	0	
Unit	**1 :** 4	**Alchl/Drgs:** 0	**Speed:** 0 MPH	**Dir:** S	**Veh Mnvr/Ped Actn:** 1	**Obj Strk:**										
Unit	**2 :** 4	**Alchl/Drgs:** 0	**Speed:** 0 MPH	**Dir:** S	**Veh Mnvr/Ped Actn:** 1	**Obj Strk:**										
Unit	**3 :** 2	**Alchl/Drgs:** 0	**Speed:** 30 MPH	**Dir:** S	**Veh Mnvr/Ped Actn:** 4	**Obj Strk:**										
Unit	**4 :** 1	**Alchl/Drgs:** 0	**Speed:** 30 MPH	**Dir:** S	**Veh Mnvr/Ped Actn:** 4	**Obj Strk:**										
Unit	**5 :** 1	**Alchl/Drgs:** 0	**Speed:** 30 MPH	**Dir:** S	**Veh Mnvr/Ped Actn:** 4	**Obj Strk:**										
331	**105013133**	21.410	02/17/2017 11:07	REAR END, SLOW OR STOP	$ 6000	0	0	0	0	1	1	1	3	0	0	
Unit	**1 :** 2	**Alchl/Drgs:** 0	**Speed:** 60 MPH	**Dir:** W	**Veh Mnvr/Ped Actn:** 4	**Obj Strk:**										
Unit	**2 :** 4	**Alchl/Drgs:** 0	**Speed:** 60 MPH	**Dir:** W	**Veh Mnvr/Ped Actn:** 4	**Obj Strk:**										
332	**105058957**	21.410	04/04/2017 08:00	REAR END, SLOW OR STOP	$ 12000	0	0	0	0	1	1	1	3	0	0	
Unit	**1 :** 1	**Alchl/Drgs:** 0	**Speed:** 40 MPH	**Dir:** E	**Veh Mnvr/Ped Actn:** 4	**Obj Strk:**										
Unit	**2 :** 2	**Alchl/Drgs:** 0	**Speed:** 40 MPH	**Dir:** E	**Veh Mnvr/Ped Actn:** 1	**Obj Strk:**										
Unit	**3 :** 1	**Alchl/Drgs:** 0	**Speed:** 40 MPH	**Dir:** E	**Veh Mnvr/Ped Actn:** 4	**Obj Strk:**										
333	**105168501**	21.410	07/21/2017 16:50	REAR END, SLOW OR STOP	$ 4200	0	0	0	0	1	1	1	3	0	0	
Unit	**1 :** 1	**Alchl/Drgs:** 0	**Speed:** 45 MPH	**Dir:** E	**Veh Mnvr/Ped Actn:** 4	**Obj Strk:**										
Unit	**2 :** 1	**Alchl/Drgs:** 0	**Speed:** 45 MPH	**Dir:** E	**Veh Mnvr/Ped Actn:** 4	**Obj Strk:**										
Unit	**3 :** 1	**Alchl/Drgs:** 0	**Speed:** 45 MPH	**Dir:** E	**Veh Mnvr/Ped Actn:** 1	**Obj Strk:**										
334	**105670516**	21.410	11/09/2018 11:57	REAR END, SLOW OR STOP	$ 2000	0	0	0	0	2	1	1	3	0	0	
Unit	**1 :** 2	**Alchl/Drgs:** 0	**Speed:** 60 MPH	**Dir:** W	**Veh Mnvr/Ped Actn:** 4	**Obj Strk:**										
Unit	**2 :** 1	**Alchl/Drgs:** 0	**Speed:** 60 MPH	**Dir:** W	**Veh Mnvr/Ped Actn:** 11	**Obj Strk:**										
335	**104379865**	21.454	05/15/2015 12:17	REAR END, SLOW OR STOP	$ 6000	0	0	0	3	1	1	2	1	0	0	
Unit	**1 :** 1	**Alchl/Drgs:** 0	**Speed:** 45 MPH	**Dir:** NW	**Veh Mnvr/Ped Actn:** 4	**Obj Strk:**										
Unit	**2 :** 1	**Alchl/Drgs:** 0	**Speed:** 10 MPH	**Dir:** NW	**Veh Mnvr/Ped Actn:** 11	**Obj Strk:**										
336	**104698255**	21.454	04/09/2016 13:18	REAR END, SLOW OR STOP	$ 5500	0	0	0	0	1	1	1	3	0	0	
Unit	**1 :** 5	**Alchl/Drgs:** 0	**Speed:** 55 MPH	**Dir:** W	**Veh Mnvr/Ped Actn:** 4	**Obj Strk:**										
Unit	**2 :** 2	**Alchl/Drgs:** 0	**Speed:** 60 MPH	**Dir:** W	**Veh Mnvr/Ped Actn:** 11	**Obj Strk:** 44										
337	**104736147**	21.457	05/12/2016 16:27	REAR END, SLOW OR STOP	$ 1200	0	0	0	0	1	1	1	1	0	0	
Unit	**1 :** 1	**Alchl/Drgs:** 0	**Speed:** 50 MPH	**Dir:** E	**Veh Mnvr/Ped Actn:** 4	**Obj Strk:**										
Unit	**2 :** 2	**Alchl/Drgs:** 0	**Speed:** 35 MPH	**Dir:** E	**Veh Mnvr/Ped Actn:** 11	**Obj Strk:**										

All data presented in this report comes explicitly from the Traffic Engineering Accident Analysis System based upon va criteria provided by the report's creator. The onus is strictly upon the user of this report to exercise due diligence in in and further representing this data.

DocuSign Envelope ID: 5C03745C-4B01-4834-A65D-B77F558A4F46

North Carolina Department of Transportation
Traffic Engineering Accident Analysis System
Strip Analysis Report

Acc No	Crash ID	Milepost	Date	Accident Type	Total Damage	Injuries F	A	B	C	Condition R	L	W	Road Ch	Ci	Trfc Ctl Dv	Op
338	**104016503**	21.462	03/26/2014 15:55	REAR END, SLOW OR STOP	$ 4500	0	0	0	0	1	1	1	1	0	0	
Unit	**1 :** 1	**Alchl/Drgs:** 0	**Speed:** 60 MPH	**Dir:** E	**Veh Mnvr/Ped Actn:** 4	**Obj Strk:**										
Unit	**2 :** 4	**Alchl/Drgs:** 0	**Speed:** 60 MPH	**Dir:** E	**Veh Mnvr/Ped Actn:** 11	**Obj Strk:**										
339	**105307542**	21.462	11/29/2017 16:00	SIDESWIPE, SAME DIRECTION	$ 6000	0	0	0	0	1	1	1	1	0	0	
Unit	**1 :** 32	**Alchl/Drgs:** 7	**Speed:** 65 MPH	**Dir:** E	**Veh Mnvr/Ped Actn:** 5	**Obj Strk:**										
Unit	**2 :** 4	**Alchl/Drgs:** 0	**Speed:** 60 MPH	**Dir:** E	**Veh Mnvr/Ped Actn:** 4	**Obj Strk:**										
340	**104437445**	21.507	07/16/2015 17:55	REAR END, SLOW OR STOP	$ 15000	0	0	0	4	1	1	2	3	0	0	
Unit	**1 :** 1	**Alchl/Drgs:** 0	**Speed:** 60 MPH	**Dir:** E	**Veh Mnvr/Ped Actn:** 4	**Obj Strk:**										
Unit	**2 :** 1	**Alchl/Drgs:** 0	**Speed:** 60 MPH	**Dir:** E	**Veh Mnvr/Ped Actn:** 11	**Obj Strk:**										
Unit	**3 :** 1	**Alchl/Drgs:** 0	**Speed:** 60 MPH	**Dir:** E	**Veh Mnvr/Ped Actn:** 11	**Obj Strk:**										
Unit	**4 :** 4	**Alchl/Drgs:** 0	**Speed:** 60 MPH	**Dir:** E	**Veh Mnvr/Ped Actn:** 11	**Obj Strk:**										
Unit	**5 :** 4	**Alchl/Drgs:** 7	**Speed:** 60 MPH	**Dir:** E	**Veh Mnvr/Ped Actn:** 11	**Obj Strk:**										
341	**104096261**	21.510	06/16/2014 19:37	SIDESWIPE, SAME DIRECTION	$ 11000	0	0	0	1	1	1	1	1	0		2
Unit	**1 :** 1	**Alchl/Drgs:** 5	**Speed:** 75 MPH	**Dir:** E	**Veh Mnvr/Ped Actn:** 16	**Obj Strk:**										
Unit	**2 :** 1	**Alchl/Drgs:** 0	**Speed:** 60 MPH	**Dir:** E	**Veh Mnvr/Ped Actn:** 4	**Obj Strk:**										
342	**104371345**	21.510	04/22/2015 16:49	SIDESWIPE, SAME DIRECTION	$ 500	0	0	0	0	1	1	1	5	12	14	1
Unit	**1 :** 32	**Alchl/Drgs:** 7	**Speed:** 50 MPH	**Dir:** E	**Veh Mnvr/Ped Actn:** 4	**Obj Strk:**										
Unit	**2 :** 14	**Alchl/Drgs:** 0	**Speed:** 50 MPH	**Dir:** E	**Veh Mnvr/Ped Actn:** 4	**Obj Strk:**										
343	**104398836**	21.510	06/05/2015 19:29	REAR END, SLOW OR STOP	$ 1800	0	0	0	2	1	1	1	1	0	0	
Unit	**1 :** 1	**Alchl/Drgs:** 0	**Speed:** 20 MPH	**Dir:** S	**Veh Mnvr/Ped Actn:** 4	**Obj Strk:**										
Unit	**2 :** 1	**Alchl/Drgs:** 0	**Speed:** 50 MPH	**Dir:** S	**Veh Mnvr/Ped Actn:** 1	**Obj Strk:**										
344	**104427949**	21.510	06/28/2015 14:41	REAR END, SLOW OR STOP	$ 2800	0	0	0	0	1	1	1	1	0		2
Unit	**1 :** 1	**Alchl/Drgs:** 0	**Speed:** 35 MPH	**Dir:** N	**Veh Mnvr/Ped Actn:** 11	**Obj Strk:**										
Unit	**2 :** 1	**Alchl/Drgs:** 0	**Speed:** 35 MPH	**Dir:** N	**Veh Mnvr/Ped Actn:** 11	**Obj Strk:**										
345	**104447193**	21.510	07/09/2015 15:16	REAR END, SLOW OR STOP	$ 3000	0	0	0	0	1	1	1	1	0	0	
Unit	**1 :** 1	**Alchl/Drgs:** 0	**Speed:** 30 MPH	**Dir:** W	**Veh Mnvr/Ped Actn:** 4	**Obj Strk:**										
Unit	**2 :** 4	**Alchl/Drgs:** 0	**Speed:** 30 MPH	**Dir:** W	**Veh Mnvr/Ped Actn:** 1	**Obj Strk:**										
346	**104432457**	21.510	07/10/2015 16:48	REAR END, SLOW OR STOP	$ 500	0	0	0	0	1	1	1	1	0	0	
Unit	**1 :** 32	**Alchl/Drgs:** 7	**Speed:** 60 MPH	**Dir:** W	**Veh Mnvr/Ped Actn:** 11	**Obj Strk:**										

All data presented in this report comes explicitly from the Traffic Engineering Accident Analysis System based upon va criteria provided by the report's creator. The onus is strictly upon the user of this report to exercise due diligence in in and further representing this data.

DocuSign Envelope ID: 5C03745C-4B01-4834-A65D-B77F558A4F46

North Carolina Department of Transportation
Traffic Engineering Accident Analysis System
Strip Analysis Report

Acc No	Crash ID	Milepost	Date	Accident Type	Total Damage	Injuries F	A	B	C	Condition R	L	W	Road Ch	Ci	Trfc Ctl Dv	Op
Unit	**2 :** 1	**Alchl/Drgs:**	0	**Speed:** 60 MPH	**Dir:** W	**Veh Mnvr/Ped Actn:**				1			**Obj Strk:**			
347	**104469142**	21.510	08/21/2015 17:21	REAR END, SLOW OR STOP	$ 5500	0	0	0	0	1	1	1	1	0	0	
Unit	**1 :** 1	**Alchl/Drgs:**	0	**Speed:** 40 MPH	**Dir:** E	**Veh Mnvr/Ped Actn:**				4			**Obj Strk:**			
Unit	**2 :** 2	**Alchl/Drgs:**	0	**Speed:** 10 MPH	**Dir:** E	**Veh Mnvr/Ped Actn:**				4			**Obj Strk:**			
Unit	**3 :** 1	**Alchl/Drgs:**	0	**Speed:** 0 MPH	**Dir:** E	**Veh Mnvr/Ped Actn:**				1			**Obj Strk:**			
348	**104575916**	21.510	12/05/2015 10:29	REAR END, SLOW OR STOP	$ 5000	0	0	0	0	1	1	1	7	0	0	
Unit	**1 :** 1	**Alchl/Drgs:**	0	**Speed:** 60 MPH	**Dir:** W	**Veh Mnvr/Ped Actn:**				4			**Obj Strk:**			
Unit	**2 :** 4	**Alchl/Drgs:**	0	**Speed:** 60 MPH	**Dir:** W	**Veh Mnvr/Ped Actn:**				11			**Obj Strk:**			
349	**104659776**	21.510	02/26/2016 15:14	REAR END, SLOW OR STOP	$ 2200	0	0	0	0	1	1	1	3	0	0	
Unit	**1 :** 1	**Alchl/Drgs:**	0	**Speed:** 45 MPH	**Dir:** W	**Veh Mnvr/Ped Actn:**				4			**Obj Strk:**			
Unit	**2 :** 1	**Alchl/Drgs:**	0	**Speed:** 45 MPH	**Dir:** W	**Veh Mnvr/Ped Actn:**				1			**Obj Strk:**			
350	**104773105**	21.510	06/08/2016 17:15	REAR END, SLOW OR STOP	$ 5000	0	0	0	3	1	1	1	1	0		2
Unit	**1 :** 1	**Alchl/Drgs:**	0	**Speed:** 50 MPH	**Dir:** E	**Veh Mnvr/Ped Actn:**				4			**Obj Strk:**			
Unit	**2 :** 1	**Alchl/Drgs:**	0	**Speed:** 50 MPH	**Dir:** E	**Veh Mnvr/Ped Actn:**				11			**Obj Strk:**			
351	**104808925**	21.510	08/03/2016 17:32	REAR END, SLOW OR STOP	$ 5000	0	0	0	1	1	1	1	3	0	0	
Unit	**1 :** 1	**Alchl/Drgs:**	0	**Speed:** 60 MPH	**Dir:** S	**Veh Mnvr/Ped Actn:**				4			**Obj Strk:**			
Unit	**2 :** 1	**Alchl/Drgs:**	0	**Speed:** 45 MPH	**Dir:** S	**Veh Mnvr/Ped Actn:**				11			**Obj Strk:**			
352	**104982374**	21.510	01/20/2017 08:09	REAR END, SLOW OR STOP	$ 1500	0	0	0	0	2	1	3	7	0	0	
Unit	**1 :** 1	**Alchl/Drgs:**	0	**Speed:** 35 MPH	**Dir:** N	**Veh Mnvr/Ped Actn:**				4			**Obj Strk:**			
Unit	**2 :** 1	**Alchl/Drgs:**	0	**Speed:** 0 MPH	**Dir:** N	**Veh Mnvr/Ped Actn:**				1			**Obj Strk:**			
353	**104982375**	21.510	01/20/2017 08:09	REAR END, SLOW OR STOP	$ 1600	0	0	0	0	2	1	3	7	0	0	
Unit	**1 :** 1	**Alchl/Drgs:**	0	**Speed:** 30 MPH	**Dir:** N	**Veh Mnvr/Ped Actn:**				4			**Obj Strk:**			
Unit	**2 :** 1	**Alchl/Drgs:**	0	**Speed:** 30 MPH	**Dir:** N	**Veh Mnvr/Ped Actn:**				11			**Obj Strk:**			
354	**105103562**	21.510	05/18/2017 09:11	SIDESWIPE, SAME DIRECTION	$ 12500	0	0	0	1	1	1	2	3	0	0	
Unit	**1 :** 1	**Alchl/Drgs:**	0	**Speed:** 70 MPH	**Dir:** S	**Veh Mnvr/Ped Actn:**				4			**Obj Strk:**		44	
Unit	**2 :** 5	**Alchl/Drgs:**	0	**Speed:** 55 MPH	**Dir:** S	**Veh Mnvr/Ped Actn:**				4			**Obj Strk:**			
355	**105104532**	21.510	05/19/2017 10:20	REAR END, SLOW OR STOP	$ 1100	0	0	0	0	1	1	1	3	0	0	
Unit	**1 :** 1	**Alchl/Drgs:**	0	**Speed:** 30 MPH	**Dir:** S	**Veh Mnvr/Ped Actn:**				4			**Obj Strk:**			

All data presented in this report comes explicitly from the Traffic Engineering Accident Analysis System based upon va criteria provided by the report's creator. The onus is strictly upon the user of this report to exercise due diligence in in and further representing this data.

DocuSign Envelope ID: 5C03745C-4B01-4834-A65D-B77F558A4F46

North Carolina Department of Transportation
Traffic Engineering Accident Analysis System
Strip Analysis Report

Acc No	Crash ID	Milepost	Date	Accident Type	Total Damage	Injuries F	A	B	C	Condition R	L	W	Road Ch	Ci	Trfc Ctl Dv	Op
Unit	**2 :** 1	**Alchl/Drgs:**	0	**Speed:** 30 MPH	**Dir:** S	**Veh Mnvr/Ped Actn:**				11			**Obj Strk:**			
356	**105371461**	21.510	02/04/2018 07:12	FIXED OBJECT	$ 20000	0	0	0	0	4	3	6	7	0	0	
Unit	**1 :** 1	**Alchl/Drgs:**	0	**Speed:** 70 MPH	**Dir:** S	**Veh Mnvr/Ped Actn:**				4			**Obj Strk:**		59	
357	**105454097**	21.510	04/20/2018 07:46	REAR END, SLOW OR STOP	$ 1800	0	0	0	0	1	1	1	3	0	0	
Unit	**1 :** 1	**Alchl/Drgs:**	0	**Speed:** 55 MPH	**Dir:** S	**Veh Mnvr/Ped Actn:**				4			**Obj Strk:**			
Unit	**2 :** 1	**Alchl/Drgs:**	0	**Speed:** 0 MPH	**Dir:** S	**Veh Mnvr/Ped Actn:**				1			**Obj Strk:**			
358	**105534191**	21.510	07/06/2018 16:00	REAR END, SLOW OR STOP	$ 2000	0	0	0	0	1	1	2	1	0	0	
Unit	**1 :** 4	**Alchl/Drgs:**	0	**Speed:** 30 MPH	**Dir:** E	**Veh Mnvr/Ped Actn:**				4			**Obj Strk:**			
Unit	**2 :** 4	**Alchl/Drgs:**	0	**Speed:** 30 MPH	**Dir:** E	**Veh Mnvr/Ped Actn:**				1			**Obj Strk:**			
359	**105615722**	21.510	09/13/2018 18:46	FIXED OBJECT	$ 10000	0	0	0	1	2	1	3	1	0	0	2
Unit	**1 :** 1	**Alchl/Drgs:**	0	**Speed:** 45 MPH	**Dir:** E	**Veh Mnvr/Ped Actn:**				4			**Obj Strk:**		64	
360	**105608350**	21.510	09/20/2018 08:46	SIDESWIPE, SAME DIRECTION	$ 2000	0	0	0	0	1	1	1	1	0	0	
Unit	**1 :** 2	**Alchl/Drgs:**	0	**Speed:** 75 MPH	**Dir:** N	**Veh Mnvr/Ped Actn:**				4			**Obj Strk:**			
Unit	**2 :** 1	**Alchl/Drgs:**	0	**Speed:** 60 MPH	**Dir:** N	**Veh Mnvr/Ped Actn:**				4			**Obj Strk:**			
361	**105666322**	21.510	10/22/2018 13:46	REAR END, SLOW OR STOP	$ 7000	0	0	0	0	1	1	1	1	0	0	1
Unit	**1 :** 1	**Alchl/Drgs:**	0	**Speed:** 30 MPH	**Dir:** N	**Veh Mnvr/Ped Actn:**				4			**Obj Strk:**			
Unit	**2 :** 1	**Alchl/Drgs:**	0	**Speed:** 15 MPH	**Dir:** N	**Veh Mnvr/Ped Actn:**				4			**Obj Strk:**			
Unit	**3 :** 1	**Alchl/Drgs:**	0	**Speed:** 5 MPH	**Dir:** N	**Veh Mnvr/Ped Actn:**				1			**Obj Strk:**			
362	**105661349**	21.510	11/03/2018 15:46	REAR END, SLOW OR STOP	$ 2600	0	0	0	1	1	1	1	1	0	0	
Unit	**1 :** 2	**Alchl/Drgs:**	0	**Speed:** 55 MPH	**Dir:** N	**Veh Mnvr/Ped Actn:**				4			**Obj Strk:**			
Unit	**2 :** 4	**Alchl/Drgs:**	0	**Speed:** 55 MPH	**Dir:** N	**Veh Mnvr/Ped Actn:**				1			**Obj Strk:**			
363	**105685921**	21.510	11/21/2018 17:57	REAR END, SLOW OR STOP	$ 16000	0	0	0	0	1	5	1	3	0	0	
Unit	**1 :** 5	**Alchl/Drgs:**	0	**Speed:** 50 MPH	**Dir:** E	**Veh Mnvr/Ped Actn:**				4			**Obj Strk:**			
Unit	**2 :** 5	**Alchl/Drgs:**	0	**Speed:** 50 MPH	**Dir:** E	**Veh Mnvr/Ped Actn:**				1			**Obj Strk:**			
Unit	**3 :** 1	**Alchl/Drgs:**	0	**Speed:** 50 MPH	**Dir:** E	**Veh Mnvr/Ped Actn:**				1			**Obj Strk:**			
364	**105721473**	21.510	12/23/2018 07:43	SIDESWIPE, SAME DIRECTION	$ 4500	0	0	0	0	1	1	1	1	0	0	
Unit	**1 :** 6	**Alchl/Drgs:**	0	**Speed:** 60 MPH	**Dir:** E	**Veh Mnvr/Ped Actn:**				4			**Obj Strk:**			
Unit	**2 :** 1	**Alchl/Drgs:**	1	**Speed:** 65 MPH	**Dir:** E	**Veh Mnvr/Ped Actn:**				4			**Obj Strk:**			

DocuSign Envelope ID: 5C03745C-4B01-4834-A65D-B77F558A4F46

North Carolina Department of Transportation
Traffic Engineering Accident Analysis System
Strip Analysis Report

Acc No	Crash ID	Milepost	Date	Accident Type	Total Damage	Injuries F	A	B	C	Condition R	L	W	Road Ch	Ci	Trfc Ctl Dv	Op
365	**104184652**	21.512	10/16/2014 15:27	REAR END, SLOW OR STOP	$ 400	0	0	0	0	1	1	1	1	0	0	
Unit	**1 :** 1	**Alchl/Drgs:** 0	**Speed:** 15 MPH	**Dir:** N	**Veh Mnvr/Ped Actn:** 4	**Obj Strk:**										
Unit	**2 :** 4	**Alchl/Drgs:** 0	**Speed:** 20 MPH	**Dir:** N	**Veh Mnvr/Ped Actn:** 4	**Obj Strk:**										
366	**105229072**	21.512	09/15/2017 15:59	REAR END, SLOW OR STOP	$ 3100	0	0	0	0	1	1	1	1	0	0	
Unit	**1 :** 1	**Alchl/Drgs:** 0	**Speed:** 45 MPH	**Dir:** E	**Veh Mnvr/Ped Actn:** 4	**Obj Strk:**										
Unit	**2 :** 2	**Alchl/Drgs:** 0	**Speed:** 45 MPH	**Dir:** E	**Veh Mnvr/Ped Actn:** 4	**Obj Strk:**										
367	**104463786**	21.554	08/18/2015 15:50	REAR END, SLOW OR STOP	$ 3000	0	0	0	0	2	1	1	1	0	0	
Unit	**1 :** 1	**Alchl/Drgs:** 0	**Speed:** 45 MPH	**Dir:** W	**Veh Mnvr/Ped Actn:** 4	**Obj Strk:**										
Unit	**2 :** 4	**Alchl/Drgs:** 0	**Speed:** 45 MPH	**Dir:** W	**Veh Mnvr/Ped Actn:** 1	**Obj Strk:**										
368	**104589923**	21.554	12/18/2015 13:11	REAR END, SLOW OR STOP	$ 1000	0	0	0	0	1	1	1	1	0	0	
Unit	**1 :** 1	**Alchl/Drgs:** 0	**Speed:** 20 MPH	**Dir:** S	**Veh Mnvr/Ped Actn:** 1	**Obj Strk:**										
Unit	**2 :** 2	**Alchl/Drgs:** 0	**Speed:** 20 MPH	**Dir:** S	**Veh Mnvr/Ped Actn:** 4	**Obj Strk:**										
369	**105354642**	21.554	01/18/2018 04:55	SIDESWIPE, OPPOSITE DIRECTION	$ 250	0	0	0	1	1	5	2	1	0	0	
Unit	**1 :** 32	**Alchl/Drgs:** 7	**Speed:** 60 MPH	**Dir:** W	**Veh Mnvr/Ped Actn:** 4	**Obj Strk:**										
Unit	**2 :** 4	**Alchl/Drgs:** 0	**Speed:** 55 MPH	**Dir:** E	**Veh Mnvr/Ped Actn:** 4	**Obj Strk:**										
370	**105670691**	21.554	11/09/2018 17:42	REAR END, SLOW OR STOP	$ 9300	0	0	0	4	1	2	2	5	0	0	
Unit	**1 :** 4	**Alchl/Drgs:** 0	**Speed:** 30 MPH	**Dir:** E	**Veh Mnvr/Ped Actn:** 4	**Obj Strk:**										
Unit	**2 :** 4	**Alchl/Drgs:** 0	**Speed:** 30 MPH	**Dir:** E	**Veh Mnvr/Ped Actn:** 1	**Obj Strk:**										
Unit	**3 :** 1	**Alchl/Drgs:** 0	**Speed:** 30 MPH	**Dir:** E	**Veh Mnvr/Ped Actn:** 1	**Obj Strk:**										
371	**105670667**	21.554	11/09/2018 17:43	REAR END, SLOW OR STOP	$ 1100	0	0	0	0	1	2	2	5	0	0	
Unit	**1 :** 1	**Alchl/Drgs:** 0	**Speed:** 30 MPH	**Dir:** E	**Veh Mnvr/Ped Actn:** 4	**Obj Strk:**										
Unit	**2 :** 4	**Alchl/Drgs:** 0	**Speed:** 30 MPH	**Dir:** E	**Veh Mnvr/Ped Actn:** 1	**Obj Strk:**										
372	**104583399**	21.557	12/10/2015 18:01	REAR END, SLOW OR STOP	$ 7900	0	0	0	0	1	5	1	1	0	0	
Unit	**1 :** 1	**Alchl/Drgs:** 0	**Speed:** 25 MPH	**Dir:** SE	**Veh Mnvr/Ped Actn:** 1	**Obj Strk:**										
Unit	**2 :** 1	**Alchl/Drgs:** 0	**Speed:** 40 MPH	**Dir:** SE	**Veh Mnvr/Ped Actn:** 4	**Obj Strk:**										
373	**104725437**	21.557	04/27/2016 15:50	REAR END, SLOW OR STOP	$ 7000	0	0	0	0	1	1	1	1	0	0	
Unit	**1 :** 1	**Alchl/Drgs:** 0	**Speed:** 45 MPH	**Dir:** W	**Veh Mnvr/Ped Actn:** 4	**Obj Strk:**										
Unit	**2 :** 1	**Alchl/Drgs:** 0	**Speed:** 0 MPH	**Dir:** W	**Veh Mnvr/Ped Actn:** 4	**Obj Strk:**										

DocuSign Envelope ID: 5C03745C-4B01-4834-A65D-B77F558A4F46

North Carolina Department of Transportation
Traffic Engineering Accident Analysis System
Strip Analysis Report

Acc No	Crash ID	Milepost	Date	Accident Type	Total Damage	Injuries F	A	B	C	Condition R	L	W	Road Ch	Ci	Trfc Ctl Dv	Op
374	**104770686**	21.557	05/30/2016 17:36	REAR END, SLOW OR STOP	$ 7000	0	0	0	2	1	1	1	1	0	0	
Unit	**1 :** 2	**Alchl/Drgs:**	0	**Speed:**	55 MPH	**Dir:**	E	**Veh Mnvr/Ped Actn:**	4	**Obj Strk:**						
Unit	**2 :** 2	**Alchl/Drgs:**	0	**Speed:**	20 MPH	**Dir:**	E	**Veh Mnvr/Ped Actn:**	11	**Obj Strk:**						
375	**104776676**	21.557	06/24/2016 16:51	REAR END, SLOW OR STOP	$ 7000	0	0	0	0	1	1	1	1	0	0	
Unit	**1 :** 1	**Alchl/Drgs:**	0	**Speed:**	45 MPH	**Dir:**	E	**Veh Mnvr/Ped Actn:**	4	**Obj Strk:**						
Unit	**2 :** 2	**Alchl/Drgs:**	0	**Speed:**	45 MPH	**Dir:**	E	**Veh Mnvr/Ped Actn:**	11	**Obj Strk:**						
Unit	**3 :** 4	**Alchl/Drgs:**	0	**Speed:**	45 MPH	**Dir:**	E	**Veh Mnvr/Ped Actn:**	11	**Obj Strk:**						
376	**105722680**	21.557	12/20/2018 15:54	REAR END, SLOW OR STOP	$ 2500	0	0	0	0	2	1	3	1	0	0	
Unit	**1 :** 2	**Alchl/Drgs:**	0	**Speed:**	30 MPH	**Dir:**	E	**Veh Mnvr/Ped Actn:**	4	**Obj Strk:**						
Unit	**2 :** 4	**Alchl/Drgs:**	0	**Speed:**	15 MPH	**Dir:**	E	**Veh Mnvr/Ped Actn:**	1	**Obj Strk:**						
377	**104125400**	21.562	08/10/2014 14:15	REAR END, SLOW OR STOP	$ 6000	0	0	0	0	1	1	1	1	0	0	
Unit	**1 :** 4	**Alchl/Drgs:**	0	**Speed:**	20 MPH	**Dir:**	W	**Veh Mnvr/Ped Actn:**	4	**Obj Strk:**						
Unit	**2 :** 2	**Alchl/Drgs:**	0	**Speed:**	0 MPH	**Dir:**	W	**Veh Mnvr/Ped Actn:**	1	**Obj Strk:**						
378	**104161492**	21.562	09/22/2014 16:01	REAR END, SLOW OR STOP	$ 23000	0	0	1	0	1	1	1	1	0	0	
Unit	**1 :** 1	**Alchl/Drgs:**	0	**Speed:**	60 MPH	**Dir:**	N	**Veh Mnvr/Ped Actn:**	5	**Obj Strk:**						
Unit	**2 :** 1	**Alchl/Drgs:**	0	**Speed:**	20 MPH	**Dir:**	N	**Veh Mnvr/Ped Actn:**	1	**Obj Strk:**						
Unit	**3 :** 1	**Alchl/Drgs:**	0	**Speed:**	20 MPH	**Dir:**	N	**Veh Mnvr/Ped Actn:**	1	**Obj Strk:**						
Unit	**4 :** 4	**Alchl/Drgs:**	0	**Speed:**	20 MPH	**Dir:**	N	**Veh Mnvr/Ped Actn:**	1	**Obj Strk:**						
379	**104679236**	21.562	03/17/2016 16:25	REAR END, SLOW OR STOP	$ 21900	0	0	0	3	1	1	1	3	0	0	
Unit	**1 :** 4	**Alchl/Drgs:**	0	**Speed:**	0 MPH	**Dir:**	NW	**Veh Mnvr/Ped Actn:**	1	**Obj Strk:**						
Unit	**2 :** 2	**Alchl/Drgs:**	0	**Speed:**	0 MPH	**Dir:**	NW	**Veh Mnvr/Ped Actn:**	1	**Obj Strk:**						
Unit	**3 :** 2	**Alchl/Drgs:**	0	**Speed:**	0 MPH	**Dir:**	NW	**Veh Mnvr/Ped Actn:**	1	**Obj Strk:**						
Unit	**4 :** 1	**Alchl/Drgs:**	0	**Speed:**	0 MPH	**Dir:**	NW	**Veh Mnvr/Ped Actn:**	1	**Obj Strk:**						
Unit	**5 :** 1	**Alchl/Drgs:**	0	**Speed:**	0 MPH	**Dir:**	SW	**Veh Mnvr/Ped Actn:**	1	**Obj Strk:**						
Unit	**6 :** 10	**Alchl/Drgs:**	0	**Speed:**	50 MPH	**Dir:**	NW	**Veh Mnvr/Ped Actn:**	4	**Obj Strk:**						
380	**104682098**	21.562	03/17/2016 16:26	BACKING UP	$ 550	0	0	0	0	1	1	1	3	0	0	
Unit	**1 :** 4	**Alchl/Drgs:**	0	**Speed:**	0 MPH	**Dir:**	NW	**Veh Mnvr/Ped Actn:**	1	**Obj Strk:**						
Unit	**2 :** 10	**Alchl/Drgs:**	0	**Speed:**	0 MPH	**Dir:**	NW	**Veh Mnvr/Ped Actn:**	10	**Obj Strk:**						
381	**104942471**	21.562	12/09/2016 13:11	REAR END, SLOW OR STOP	$ 18000	0	0	0	3	1	1	1	3	0	0	
Unit	**1 :** 1	**Alchl/Drgs:**	0	**Speed:**	75 MPH	**Dir:**	W	**Veh Mnvr/Ped Actn:**	11	**Obj Strk:**	44					

All data presented in this report comes explicitly from the Traffic Engineering Accident Analysis System based upon va criteria provided by the report's creator. The onus is strictly upon the user of this report to exercise due diligence in in and further representing this data.

DocuSign Envelope ID: 5C03745C-4B01-4834-A65D-B77F558A4F46

North Carolina Department of Transportation
Traffic Engineering Accident Analysis System
Strip Analysis Report

Acc No	Crash ID	Milepost	Date	Accident Type	Total Damage	Injuries F	A	B	C	Condition R	L	W	Road Ch	Ci	Trfc Ctl Dv	Op
Unit	**2 :** 1	**Alchl/Drgs:**	0	**Speed:** 60 MPH	**Dir:** W	**Veh Mnvr/Ped Actn:**				11			**Obj Strk:**			
382	**105435798**	21.562	04/05/2018 13:42	REAR END, SLOW OR STOP	$ 3000	0	0	0	0	1	1	1	3	0	0	
Unit	**1 :** 1	**Alchl/Drgs:**	0	**Speed:** 40 MPH	**Dir:** W	**Veh Mnvr/Ped Actn:**				4			**Obj Strk:**			
Unit	**2 :** 1	**Alchl/Drgs:**	0	**Speed:** 40 MPH	**Dir:** W	**Veh Mnvr/Ped Actn:**				11			**Obj Strk:**			
383	**105477428**	21.562	05/11/2018 11:29	REAR END, SLOW OR STOP	$ 23800	0	0	0	1	1	1	1	3	0	0	
Unit	**1 :** 1	**Alchl/Drgs:**	0	**Speed:** 60 MPH	**Dir:** W	**Veh Mnvr/Ped Actn:**				4			**Obj Strk:**			
Unit	**2 :** 4	**Alchl/Drgs:**	0	**Speed:** 60 MPH	**Dir:** W	**Veh Mnvr/Ped Actn:**				4			**Obj Strk:**			
Unit	**3 :** 4	**Alchl/Drgs:**	0	**Speed:** 60 MPH	**Dir:** W	**Veh Mnvr/Ped Actn:**				11			**Obj Strk:**			
Unit	**4 :** 2	**Alchl/Drgs:**	0	**Speed:** 60 MPH	**Dir:** W	**Veh Mnvr/Ped Actn:**				11			**Obj Strk:**			
Unit	**5 :** 1	**Alchl/Drgs:**	0	**Speed:** 60 MPH	**Dir:** W	**Veh Mnvr/Ped Actn:**				1			**Obj Strk:**			
Unit	**6 :** 5	**Alchl/Drgs:**	0	**Speed:** 60 MPH	**Dir:** W	**Veh Mnvr/Ped Actn:**				1			**Obj Strk:**			
384	**105528876**	21.562	07/01/2018 16:02	REAR END, SLOW OR STOP	$ 7000	0	0	0	0	1	1	1	1	0	0	
Unit	**1 :** 2	**Alchl/Drgs:**	0	**Speed:** 15 MPH	**Dir:** E	**Veh Mnvr/Ped Actn:**				4			**Obj Strk:**			
Unit	**2 :** 1	**Alchl/Drgs:**	0	**Speed:** 15 MPH	**Dir:** E	**Veh Mnvr/Ped Actn:**				1			**Obj Strk:**			
385	**105543912**	21.562	07/15/2018 11:11	REAR END, SLOW OR STOP	$ 41000	0	0	2	0	1	1	1	1	0	0	
Unit	**1 :** 1	**Alchl/Drgs:**	0	**Speed:** 60 MPH	**Dir:** W	**Veh Mnvr/Ped Actn:**				4			**Obj Strk:**			
Unit	**2 :** 2	**Alchl/Drgs:**	0	**Speed:** 50 MPH	**Dir:** W	**Veh Mnvr/Ped Actn:**				1			**Obj Strk:**		44	
Unit	**3 :** 1	**Alchl/Drgs:**	0	**Speed:** 50 MPH	**Dir:** W	**Veh Mnvr/Ped Actn:**				1			**Obj Strk:**			
Unit	**4 :** 4	**Alchl/Drgs:**	0	**Speed:** 50 MPH	**Dir:** W	**Veh Mnvr/Ped Actn:**				1			**Obj Strk:**			
386	**104931673**	21.610	11/28/2016 18:08	FIXED OBJECT	$ 3800	0	0	0	0	1	5	1	7	0	0	
Unit	**1 :** 1	**Alchl/Drgs:**	0	**Speed:** 55 MPH	**Dir:** E	**Veh Mnvr/Ped Actn:**				5			**Obj Strk:**		42	
387	**105113644**	21.610	05/26/2017 15:37	REAR END, SLOW OR STOP	$ 3000	0	0	0	0	1	1	1	3	0	0	
Unit	**1 :** 2	**Alchl/Drgs:**	0	**Speed:** 35 MPH	**Dir:** E	**Veh Mnvr/Ped Actn:**				4			**Obj Strk:**			
Unit	**2 :** 4	**Alchl/Drgs:**	0	**Speed:** 35 MPH	**Dir:** E	**Veh Mnvr/Ped Actn:**				1			**Obj Strk:**			
Unit	**3 :** 4	**Alchl/Drgs:**	0	**Speed:** 35 MPH	**Dir:** E	**Veh Mnvr/Ped Actn:**				1			**Obj Strk:**			
388	**105245240**	21.610	10/06/2017 15:23	REAR END, SLOW OR STOP	$ 2100	0	0	0	0	1	1	1	1	0	0	
Unit	**1 :** 1	**Alchl/Drgs:**	0	**Speed:** 50 MPH	**Dir:** N	**Veh Mnvr/Ped Actn:**				4			**Obj Strk:**			
Unit	**2 :** 4	**Alchl/Drgs:**	0	**Speed:** 50 MPH	**Dir:** N	**Veh Mnvr/Ped Actn:**				11			**Obj Strk:**			
389	**105286587**	21.610	11/10/2017 17:55	REAR END, SLOW OR STOP	$ 2300	0	0	0	0	1	2	1	3	0	0	
Unit	**1 :** 4	**Alchl/Drgs:**	0	**Speed:** 30 MPH	**Dir:** E	**Veh Mnvr/Ped Actn:**				11			**Obj Strk:**			

DocuSign Envelope ID: 5C03745C-4B01-4834-A65D-B77F558A4F46

North Carolina Department of Transportation
Traffic Engineering Accident Analysis System
Strip Analysis Report

Acc No	Crash ID	Milepost	Date	Accident Type	Total Damage	Injuries F	A	B	C	Condition R	L	W	Road Ch	Ci	Trfc Ctl Dv	Op
Unit	**2 :** 4	**Alchl/Drgs:**	0	**Speed:** 30 MPH	**Dir:** E	**Veh Mnvr/Ped Actn:**				11			**Obj Strk:**			
390	**105646928**	21.610	10/22/2018 08:17	REAR END, SLOW OR STOP	$ 8000	0	0	0	0	1	1	1	3	0	0	
Unit	**1 :** 1	**Alchl/Drgs:**	0	**Speed:** 60 MPH	**Dir:** W	**Veh Mnvr/Ped Actn:**				4			**Obj Strk:**			
Unit	**2 :** 4	**Alchl/Drgs:**	0	**Speed:** 60 MPH	**Dir:** W	**Veh Mnvr/Ped Actn:**				1			**Obj Strk:**			
391	**104552710**	21.632	11/05/2015 18:08	REAR END, SLOW OR STOP	$ 20200	1	0	0	0	1	2	1	1	0	0	
Unit	**1 :** 2	**Alchl/Drgs:**	0	**Speed:** 65 MPH	**Dir:** E	**Veh Mnvr/Ped Actn:**				4			**Obj Strk:**			
Unit	**2 :** 1	**Alchl/Drgs:**	0	**Speed:** 55 MPH	**Dir:** E	**Veh Mnvr/Ped Actn:**				1			**Obj Strk:**		44	
Unit	**3 :** 1	**Alchl/Drgs:**	0	**Speed:** 55 MPH	**Dir:** E	**Veh Mnvr/Ped Actn:**				1			**Obj Strk:**			
Unit	**4 :** 1	**Alchl/Drgs:**	0	**Speed:** 55 MPH	**Dir:** E	**Veh Mnvr/Ped Actn:**				1			**Obj Strk:**			
Unit	**5 :** 1	**Alchl/Drgs:**	0	**Speed:** 55 MPH	**Dir:** E	**Veh Mnvr/Ped Actn:**				1			**Obj Strk:**			
392	**104328751**	21.638	03/07/2015 13:04	REAR END, SLOW OR STOP	$ 9000	0	0	0	0	1	1	1	1	0		2
Unit	**1 :** 1	**Alchl/Drgs:**	0	**Speed:** 55 MPH	**Dir:** W	**Veh Mnvr/Ped Actn:**				11			**Obj Strk:**			
Unit	**2 :** 4	**Alchl/Drgs:**	0	**Speed:** 45 MPH	**Dir:** W	**Veh Mnvr/Ped Actn:**				11			**Obj Strk:**			
393	**104359851**	21.638	04/08/2015 18:06	REAR END, SLOW OR STOP	$ 1800	0	0	0	1	1	1	1	1	0	0	
Unit	**1 :** 2	**Alchl/Drgs:**	0	**Speed:** 35 MPH	**Dir:** N	**Veh Mnvr/Ped Actn:**				4			**Obj Strk:**			
Unit	**2 :** 1	**Alchl/Drgs:**	0	**Speed:** 50 MPH	**Dir:** N	**Veh Mnvr/Ped Actn:**				11			**Obj Strk:**			
394	**104963752**	21.652	12/06/2016 09:13	REAR END, SLOW OR STOP	$ 2000	0	0	0	0	2	1	3	1	0		2
Unit	**1 :** 1	**Alchl/Drgs:**	7	**Speed:** 45 MPH	**Dir:** NW	**Veh Mnvr/Ped Actn:**				4			**Obj Strk:**			
Unit	**2 :** 4	**Alchl/Drgs:**	0	**Speed:** 0 MPH	**Dir:** NW	**Veh Mnvr/Ped Actn:**				11			**Obj Strk:**			
395	**104181522**	21.654	10/10/2014 13:17	REAR END, SLOW OR STOP	$ 2900	0	0	0	0	1	1	1	1	0	0	
Unit	**1 :** 1	**Alchl/Drgs:**	0	**Speed:** 40 MPH	**Dir:** N	**Veh Mnvr/Ped Actn:**				4			**Obj Strk:**			
Unit	**2 :** 4	**Alchl/Drgs:**	0	**Speed:** 35 MPH	**Dir:** N	**Veh Mnvr/Ped Actn:**				1			**Obj Strk:**			
396	**105525814**	21.654	06/28/2018 09:02	REAR END, SLOW OR STOP	$ 1500	0	0	0	0	2	1	2	5	0	0	
Unit	**1 :** 1	**Alchl/Drgs:**	0	**Speed:** 40 MPH	**Dir:** S	**Veh Mnvr/Ped Actn:**				4			**Obj Strk:**			
Unit	**2 :** 1	**Alchl/Drgs:**	0	**Speed:** 40 MPH	**Dir:** S	**Veh Mnvr/Ped Actn:**				1			**Obj Strk:**			
397	**104648354**	21.657	02/17/2016 08:37	REAR END, SLOW OR STOP	$ 1700	0	0	0	0	1	1	1	1	0	0	
Unit	**1 :** 2	**Alchl/Drgs:**	0	**Speed:** 60 MPH	**Dir:** S	**Veh Mnvr/Ped Actn:**				11			**Obj Strk:**			
Unit	**2 :** 2	**Alchl/Drgs:**	0	**Speed:** 45 MPH	**Dir:** S	**Veh Mnvr/Ped Actn:**				11			**Obj Strk:**			

DocuSign Envelope ID: 5C03745C-4B01-4834-A65D-B77F558A4F46

North Carolina Department of Transportation
Traffic Engineering Accident Analysis System
Strip Analysis Report

Acc No	Crash ID	Milepost	Date	Accident Type	Total Damage	Injuries F	A	B	C	Condition R	L	W	Road Ch	Ci	Trfc Ctl Dv	Op
398	**105529044**	21.657	07/02/2018 15:49	REAR END, SLOW OR STOP	$ 3500	0	0	0	0	1	1	1	1	0	0	
Unit	**1 :** 1	**Alchl/Drgs:**	0	**Speed:** 45 MPH	**Dir:** W	**Veh Mnvr/Ped Actn:**			4		**Obj Strk:**					
Unit	**2 :** 1	**Alchl/Drgs:**	0	**Speed:** 0 MPH	**Dir:** W	**Veh Mnvr/Ped Actn:**			1		**Obj Strk:**					
Unit	**3 :** 1	**Alchl/Drgs:**	0	**Speed:** 0 MPH	**Dir:** W	**Veh Mnvr/Ped Actn:**			1		**Obj Strk:**					
399	**104372941**	21.662	05/08/2015 07:50	REAR END, SLOW OR STOP	$ 1250	0	0	0	0	1	1	2	1	0	0	
Unit	**1 :** 1	**Alchl/Drgs:**	0	**Speed:** 50 MPH	**Dir:** E	**Veh Mnvr/Ped Actn:**			4		**Obj Strk:**					
Unit	**2 :** 1	**Alchl/Drgs:**	0	**Speed:** 45 MPH	**Dir:** E	**Veh Mnvr/Ped Actn:**			11		**Obj Strk:**					
400	**104382374**	21.662	05/08/2015 07:51	REAR END, SLOW OR STOP	$ 10900	0	0	0	0	1	1	2	1	0	0	
Unit	**1 :** 1	**Alchl/Drgs:**	0	**Speed:** 50 MPH	**Dir:** E	**Veh Mnvr/Ped Actn:**			4		**Obj Strk:**					
Unit	**2 :** 1	**Alchl/Drgs:**	0	**Speed:** 0 MPH	**Dir:** E	**Veh Mnvr/Ped Actn:**			1		**Obj Strk:**					
401	**104375928**	21.662	05/12/2015 17:03	REAR END, SLOW OR STOP	$ 1000	0	0	0	0	1	1	1	3	0	0	
Unit	**1 :** 1	**Alchl/Drgs:**	0	**Speed:** 15 MPH	**Dir:** N	**Veh Mnvr/Ped Actn:**			4		**Obj Strk:**					
Unit	**2 :** 1	**Alchl/Drgs:**	0	**Speed:** 15 MPH	**Dir:** N	**Veh Mnvr/Ped Actn:**			11		**Obj Strk:**					
402	**104443826**	21.662	07/27/2015 11:27	SIDESWIPE, SAME DIRECTION	$ 7900	0	0	0	0	1	1	1	5	0	0	
Unit	**1 :** 5	**Alchl/Drgs:**	0	**Speed:** 55 MPH	**Dir:** S	**Veh Mnvr/Ped Actn:**			4		**Obj Strk:**					
Unit	**2 :** 1	**Alchl/Drgs:**	0	**Speed:** 60 MPH	**Dir:** S	**Veh Mnvr/Ped Actn:**			4		**Obj Strk:**				44	
403	**104955623**	21.662	12/20/2016 17:02	REAR END, SLOW OR STOP	$ 2000	0	0	0	2	1	1	1	1	0	0	
Unit	**1 :** 1	**Alchl/Drgs:**	0	**Speed:** 35 MPH	**Dir:** W	**Veh Mnvr/Ped Actn:**			4		**Obj Strk:**					
Unit	**2 :** 4	**Alchl/Drgs:**	0	**Speed:** 15 MPH	**Dir:** W	**Veh Mnvr/Ped Actn:**			11		**Obj Strk:**					
404	**104961367**	21.662	12/28/2016 18:58	REAR END, SLOW OR STOP	$ 1500	0	0	0	0	1	5	1	3	0	0	
Unit	**1 :** 1	**Alchl/Drgs:**	0	**Speed:** 45 MPH	**Dir:** E	**Veh Mnvr/Ped Actn:**			4		**Obj Strk:**					
Unit	**2 :** 1	**Alchl/Drgs:**	0	**Speed:** 30 MPH	**Dir:** E	**Veh Mnvr/Ped Actn:**			11		**Obj Strk:**					
405	**105113441**	21.662	05/26/2017 07:54	REAR END, SLOW OR STOP	$ 1500	0	0	0	0	1	1	1	5	0	0	
Unit	**1 :** 2	**Alchl/Drgs:**	0	**Speed:** 40 MPH	**Dir:** N	**Veh Mnvr/Ped Actn:**			4		**Obj Strk:**					
Unit	**2 :** 4	**Alchl/Drgs:**	0	**Speed:** 40 MPH	**Dir:** N	**Veh Mnvr/Ped Actn:**			11		**Obj Strk:**					
406	**105299939**	21.662	11/21/2017 18:06	REAR END, SLOW OR STOP	$ 14300	0	0	1	0	1	5	1	1	0	0	
Unit	**1 :** 1	**Alchl/Drgs:**	0	**Speed:** 35 MPH	**Dir:** E	**Veh Mnvr/Ped Actn:**			4		**Obj Strk:**					
Unit	**2 :** 1	**Alchl/Drgs:**	0	**Speed:** 35 MPH	**Dir:** E	**Veh Mnvr/Ped Actn:**			1		**Obj Strk:**					
Unit	**3 :** 1	**Alchl/Drgs:**	0	**Speed:** 35 MPH	**Dir:** E	**Veh Mnvr/Ped Actn:**			4		**Obj Strk:**					

DocuSign Envelope ID: 5C03745C-4B01-4834-A65D-B77F558A4F46

North Carolina Department of Transportation
Traffic Engineering Accident Analysis System
Strip Analysis Report

Acc No	Crash ID	Milepost	Date	Accident Type	Total Damage	Injuries F	A	B	C	Condition R	L	W	Road Ch	Ci	Trfc Ctl Dv	Op
407	**105386179**	21.662	02/16/2018 18:54	REAR END, SLOW OR STOP	$ 13000	0	0	0	0	1	2	1	1	0	0	
Unit	**1 :** 1	**Alchl/Drgs:** 0	**Speed:** 60 MPH	**Dir:** W	**Veh Mnvr/Ped Actn:** 4	**Obj Strk:**										
Unit	**2 :** 4	**Alchl/Drgs:** 0	**Speed:** 60 MPH	**Dir:** W	**Veh Mnvr/Ped Actn:** 1	**Obj Strk:**										
Unit	**3 :** 1	**Alchl/Drgs:** 0	**Speed:** 60 MPH	**Dir:** W	**Veh Mnvr/Ped Actn:** 1	**Obj Strk:**										
408	**105464459**	21.662	04/29/2018 13:15	REAR END, SLOW OR STOP	$ 14500	0	0	2	2	1	1	1	1	0	0	
Unit	**1 :** 2	**Alchl/Drgs:** 0	**Speed:** 60 MPH	**Dir:** S	**Veh Mnvr/Ped Actn:** 4	**Obj Strk:**										
Unit	**2 :** 1	**Alchl/Drgs:** 0	**Speed:** 35 MPH	**Dir:** S	**Veh Mnvr/Ped Actn:** 11	**Obj Strk:**										
Unit	**3 :** 1	**Alchl/Drgs:** 0	**Speed:** 25 MPH	**Dir:** S	**Veh Mnvr/Ped Actn:** 11	**Obj Strk:**										
409	**104178460**	21.710	10/10/2014 15:50	REAR END, SLOW OR STOP	$ 5000	0	0	0	0	1	1	1	3	0	0	
Unit	**1 :** 5	**Alchl/Drgs:** 0	**Speed:** 60 MPH	**Dir:** E	**Veh Mnvr/Ped Actn:** 4	**Obj Strk:**										
Unit	**2 :** 4	**Alchl/Drgs:** 0	**Speed:** 55 MPH	**Dir:** E	**Veh Mnvr/Ped Actn:** 11	**Obj Strk:**										
410	**104595054**	21.710	12/18/2015 14:28	REAR END, SLOW OR STOP	$ 30500	0	0	0	3	1	1	1	1	0	0	
Unit	**1 :** 10	**Alchl/Drgs:** 0	**Speed:** 65 MPH	**Dir:** W	**Veh Mnvr/Ped Actn:** 4	**Obj Strk:** 44										
Unit	**2 :** 2	**Alchl/Drgs:** 0	**Speed:** 60 MPH	**Dir:** W	**Veh Mnvr/Ped Actn:** 1	**Obj Strk:** 44										
Unit	**3 :** 1	**Alchl/Drgs:** 0	**Speed:** 60 MPH	**Dir:** W	**Veh Mnvr/Ped Actn:** 1	**Obj Strk:**										
411	**104691704**	21.710	03/31/2016 16:30	REAR END, SLOW OR STOP	$ 1500	0	0	0	2	2	1	3	3	0	0	
Unit	**1 :** 4	**Alchl/Drgs:** 0	**Speed:** 25 MPH	**Dir:** W	**Veh Mnvr/Ped Actn:** 4	**Obj Strk:**										
Unit	**2 :** 1	**Alchl/Drgs:** 0	**Speed:** 25 MPH	**Dir:** W	**Veh Mnvr/Ped Actn:** 1	**Obj Strk:**										
412	**104793416**	21.710	07/14/2016 15:54	REAR END, SLOW OR STOP	$ 8500	0	0	0	0	1	1	2	3	0	0	
Unit	**1 :** 1	**Alchl/Drgs:** 0	**Speed:** 60 MPH	**Dir:** W	**Veh Mnvr/Ped Actn:** 4	**Obj Strk:** 44										
Unit	**2 :** 2	**Alchl/Drgs:** 0	**Speed:** 60 MPH	**Dir:** W	**Veh Mnvr/Ped Actn:** 1	**Obj Strk:**										
413	**105148331**	21.710	07/01/2017 10:09	REAR END, SLOW OR STOP	$ 3000	0	0	0	0	1	1	1	3	0	0	
Unit	**1 :** 5	**Alchl/Drgs:** 0	**Speed:** 45 MPH	**Dir:** W	**Veh Mnvr/Ped Actn:** 4	**Obj Strk:**										
Unit	**2 :** 4	**Alchl/Drgs:** 0	**Speed:** 35 MPH	**Dir:** W	**Veh Mnvr/Ped Actn:** 4	**Obj Strk:**										
414	**105369046**	21.710	01/31/2018 22:41	OTHER COLLISION WITH VEHICLE	$ 2000	0	0	0	0	1	5	1	1	0	0	
Unit	**1 :** 11	**Alchl/Drgs:** 0	**Speed:** 0 MPH	**Dir:** W	**Veh Mnvr/Ped Actn:** 1	**Obj Strk:**										
Unit	**2 :** 4	**Alchl/Drgs:** 0	**Speed:** 0 MPH	**Dir:** E	**Veh Mnvr/Ped Actn:** 1	**Obj Strk:**										

DocuSign Envelope ID: 5C03745C-4B01-4834-A65D-B77F558A4F46

North Carolina Department of Transportation
Traffic Engineering Accident Analysis System
Strip Analysis Report

Acc No	Crash ID	Milepost	Date	Accident Type	Total Damage	Injuries F	A	B	C	Condition R	L	W	Road Ch	Ci	Trfc Ctl Dv	Op
415	**105534423**	21.710	07/08/2018 13:22	REAR END, SLOW OR STOP	$ 8000	0	0	0	0	1	1	1	3	0	0	
Unit	**1 :** 1	**Alchl/Drgs:** 0	**Speed:** 50 MPH	**Dir:** E	**Veh Mnvr/Ped Actn:** 4	**Obj Strk:**										
Unit	**2 :** 1	**Alchl/Drgs:** 0	**Speed:** 50 MPH	**Dir:** E	**Veh Mnvr/Ped Actn:** 1	**Obj Strk:**										
Unit	**3 :** 4	**Alchl/Drgs:** 0	**Speed:** 50 MPH	**Dir:** E	**Veh Mnvr/Ped Actn:** 11	**Obj Strk:**										
416	**105276884**	21.724	11/03/2017 19:28	REAR END, SLOW OR STOP	$ 4500	0	0	0	0	1	5	2	1	0	0	
Unit	**1 :** 2	**Alchl/Drgs:** 0	**Speed:** 45 MPH	**Dir:** E	**Veh Mnvr/Ped Actn:** 4	**Obj Strk:**										
Unit	**2 :** 1	**Alchl/Drgs:** 0	**Speed:** 45 MPH	**Dir:** E	**Veh Mnvr/Ped Actn:** 11	**Obj Strk:**										
417	**104455138**	21.743	08/08/2015 11:36	REAR END, SLOW OR STOP	$ 1000	0	0	0	1	1	1	1	1	0	0	
Unit	**1 :** 4	**Alchl/Drgs:** 0	**Speed:** 35 MPH	**Dir:** N	**Veh Mnvr/Ped Actn:** 4	**Obj Strk:**										
Unit	**2 :** 2	**Alchl/Drgs:** 0	**Speed:** 0 MPH	**Dir:** N	**Veh Mnvr/Ped Actn:** 1	**Obj Strk:**										
418	**105123585**	21.754	06/02/2017 18:18	REAR END, SLOW OR STOP	$ 1000	0	0	0	0	1	1	1	1	0	0	
Unit	**1 :** 20	**Alchl/Drgs:** 7	**Speed:** 30 MPH	**Dir:** E	**Veh Mnvr/Ped Actn:** 4	**Obj Strk:**										
Unit	**2 :** 1	**Alchl/Drgs:** 0	**Speed:** 25 MPH	**Dir:** E	**Veh Mnvr/Ped Actn:** 4	**Obj Strk:**										
419	**105283873**	21.754	11/07/2017 18:00	REAR END, SLOW OR STOP	$ 15000	0	0	0	0	1	5	1	1	0	0	
Unit	**1 :** 1	**Alchl/Drgs:** 0	**Speed:** 60 MPH	**Dir:** E	**Veh Mnvr/Ped Actn:** 4	**Obj Strk:**										
Unit	**2 :** 4	**Alchl/Drgs:** 0	**Speed:** 55 MPH	**Dir:** E	**Veh Mnvr/Ped Actn:** 11	**Obj Strk:**										
420	**105522100**	21.754	06/24/2018 16:16	REAR END, SLOW OR STOP	$ 3000	0	0	0	0	1	1	1	1	0	0	
Unit	**1 :** 1	**Alchl/Drgs:** 0	**Speed:** 50 MPH	**Dir:** E	**Veh Mnvr/Ped Actn:** 4	**Obj Strk:**										
Unit	**2 :** 4	**Alchl/Drgs:** 0	**Speed:** 25 MPH	**Dir:** E	**Veh Mnvr/Ped Actn:** 11	**Obj Strk:**										
421	**104989533**	21.755	01/27/2017 18:43	REAR END, SLOW OR STOP	$ 3500	0	0	0	0	1	5	1	3	0	0	
Unit	**1 :** 2	**Alchl/Drgs:** 0	**Speed:** 45 MPH	**Dir:** W	**Veh Mnvr/Ped Actn:** 4	**Obj Strk:**										
Unit	**2 :** 1	**Alchl/Drgs:** 0	**Speed:** 45 MPH	**Dir:** W	**Veh Mnvr/Ped Actn:** 4	**Obj Strk:**										
422	**104193294**	21.757	10/23/2014 15:19	REAR END, SLOW OR STOP	$ 4500	0	0	0	0	1	1	1	1	0	0	
Unit	**1 :** 4	**Alchl/Drgs:** 0	**Speed:** 10 MPH	**Dir:** N	**Veh Mnvr/Ped Actn:** 5	**Obj Strk:**										
Unit	**2 :** 4	**Alchl/Drgs:** 0	**Speed:** 10 MPH	**Dir:** N	**Veh Mnvr/Ped Actn:** 4	**Obj Strk:**										
423	**104247352**	21.757	12/18/2014 17:59	REAR END, SLOW OR STOP	$ 1700	0	0	0	0	1	5	1	1	0	0	
Unit	**1 :** 2	**Alchl/Drgs:** 0	**Speed:** 10 MPH	**Dir:** S	**Veh Mnvr/Ped Actn:** 11	**Obj Strk:**										
Unit	**2 :** 5	**Alchl/Drgs:** 0	**Speed:** 0 MPH	**Dir:** S	**Veh Mnvr/Ped Actn:** 1	**Obj Strk:**										

DocuSign Envelope ID: 5C03745C-4B01-4834-A65D-B77F558A4F46

North Carolina Department of Transportation
Traffic Engineering Accident Analysis System
Strip Analysis Report

Acc No	Crash ID	Milepost	Date	Accident Type	Total Damage	Injuries F	A	B	C	Condition R	L	W	Road Ch	Ci	Trfc Ctl Dv	Op
424	**104295017**	21.757	02/13/2015 16:23	REAR END, SLOW OR STOP	$ 2500	0	0	0	0	1	1	1	1	0	0	
Unit	**1 :** 1	**Alchl/Drgs:** 0	**Speed:** 45 MPH	**Dir:** N	**Veh Mnvr/Ped Actn:** 4	**Obj Strk:**										
Unit	**2 :** 1	**Alchl/Drgs:** 0	**Speed:** 0 MPH	**Dir:** N	**Veh Mnvr/Ped Actn:** 1	**Obj Strk:**										
425	**104299152**	21.757	02/13/2015 16:38	REAR END, SLOW OR STOP	$ 1000	0	0	0	0	1	1	1	1	0	0	
Unit	**1 :** 1	**Alchl/Drgs:** 0	**Speed:** 45 MPH	**Dir:** N	**Veh Mnvr/Ped Actn:** 4	**Obj Strk:**										
Unit	**2 :** 2	**Alchl/Drgs:** 7	**Speed:** 60 MPH	**Dir:** N	**Veh Mnvr/Ped Actn:** 1	**Obj Strk:**										
426	**104364846**	21.757	04/30/2015 18:34	REAR END, SLOW OR STOP	$ 1800	0	0	0	0	1	1	2	1	0	0	
Unit	**1 :** 4	**Alchl/Drgs:** 0	**Speed:** 50 MPH	**Dir:** N	**Veh Mnvr/Ped Actn:** 4	**Obj Strk:**										
Unit	**2 :** 1	**Alchl/Drgs:** 0	**Speed:** 50 MPH	**Dir:** N	**Veh Mnvr/Ped Actn:** 11	**Obj Strk:**										
427	**104590542**	21.757	12/19/2015 11:00	REAR END, SLOW OR STOP	$ 4900	0	0	0	0	1	1	1	1	0	0	
Unit	**1 :** 1	**Alchl/Drgs:** 0	**Speed:** 60 MPH	**Dir:** N	**Veh Mnvr/Ped Actn:** 4	**Obj Strk:**										
Unit	**2 :** 4	**Alchl/Drgs:** 0	**Speed:** 60 MPH	**Dir:** N	**Veh Mnvr/Ped Actn:** 1	**Obj Strk:**										
428	**104590543**	21.757	12/19/2015 11:16	REAR END, SLOW OR STOP	$ 2300	0	0	0	0	1	1	1	1	0	0	
Unit	**1 :** 1	**Alchl/Drgs:** 0	**Speed:** 55 MPH	**Dir:** N	**Veh Mnvr/Ped Actn:** 4	**Obj Strk:**										
Unit	**2 :** 1	**Alchl/Drgs:** 0	**Speed:** 60 MPH	**Dir:** N	**Veh Mnvr/Ped Actn:** 1	**Obj Strk:**										
429	**104593019**	21.757	12/19/2015 11:24	SIDESWIPE, SAME DIRECTION	$ 2500	0	0	0	0	1	1	1	1	0	0	
Unit	**1 :** 2	**Alchl/Drgs:** 0	**Speed:** 55 MPH	**Dir:** N	**Veh Mnvr/Ped Actn:** 16	**Obj Strk:**										
Unit	**2 :** 2	**Alchl/Drgs:** 0	**Speed:** 55 MPH	**Dir:** N	**Veh Mnvr/Ped Actn:** 4	**Obj Strk:**										
430	**104668372**	21.757	03/01/2016 07:30	REAR END, SLOW OR STOP	$ 2500	0	0	0	0	1	1	1	1	0	0	
Unit	**1 :** 2	**Alchl/Drgs:** 0	**Speed:** 55 MPH	**Dir:** N	**Veh Mnvr/Ped Actn:** 4	**Obj Strk:**										
Unit	**2 :** 2	**Alchl/Drgs:** 0	**Speed:** 55 MPH	**Dir:** N	**Veh Mnvr/Ped Actn:** 1	**Obj Strk:**										
431	**104767734**	21.757	06/18/2016 11:54	REAR END, SLOW OR STOP	$ 3500	0	0	0	1	1	1	1	1	0	0	
Unit	**1 :** 2	**Alchl/Drgs:** 7	**Speed:** 60 MPH	**Dir:** N	**Veh Mnvr/Ped Actn:** 4	**Obj Strk:**										
Unit	**2 :** 1	**Alchl/Drgs:** 0	**Speed:** 50 MPH	**Dir:** N	**Veh Mnvr/Ped Actn:** 11	**Obj Strk:** 44										
432	**104861176**	21.757	09/26/2016 12:12	FIXED OBJECT	$ 4500	0	0	0	0	1	1	1	1	0	0	
Unit	**1 :** 1	**Alchl/Drgs:** 0	**Speed:** 60 MPH	**Dir:** N	**Veh Mnvr/Ped Actn:** 4	**Obj Strk:** 44										

DocuSign Envelope ID: 5C03745C-4B01-4834-A65D-B77F558A4F46

North Carolina Department of Transportation
Traffic Engineering Accident Analysis System
Strip Analysis Report

Acc No	Crash ID	Milepost	Date	Accident Type	Total Damage	Injuries F	A	B	C	Condition R	L	W	Road Ch	Ci	Trfc Ctl Dv	Op
433	**104890809**	21.757	10/23/2016 12:41	REAR END, SLOW OR STOP	$ 2700	0	0	0	0	1	1	1	1	0	0	
Unit	**1 :** 2	**Alchl/Drgs:** 0	**Speed:** 55 MPH	**Dir:** N	**Veh Mnvr/Ped Actn:** 4	**Obj Strk:**										
Unit	**2 :** 1	**Alchl/Drgs:** 0	**Speed:** 55 MPH	**Dir:** N	**Veh Mnvr/Ped Actn:** 11	**Obj Strk:**										
434	**104897959**	21.757	10/31/2016 08:03	REAR END, SLOW OR STOP	$ 24000	0	0	0	0	1	1	1	1	0	0	
Unit	**1 :** 1	**Alchl/Drgs:** 0	**Speed:** 60 MPH	**Dir:** N	**Veh Mnvr/Ped Actn:** 4	**Obj Strk:**										
Unit	**2 :** 2	**Alchl/Drgs:** 0	**Speed:** 60 MPH	**Dir:** N	**Veh Mnvr/Ped Actn:** 11	**Obj Strk:** 42										
435	**104919703**	21.757	11/17/2016 19:03	REAR END, SLOW OR STOP	$ 2000	0	0	0	0	1	5	1	1	0	0	
Unit	**1 :** 1	**Alchl/Drgs:** 0	**Speed:** 30 MPH	**Dir:** W	**Veh Mnvr/Ped Actn:** 4	**Obj Strk:**										
Unit	**2 :** 4	**Alchl/Drgs:** 0	**Speed:** 30 MPH	**Dir:** W	**Veh Mnvr/Ped Actn:** 4	**Obj Strk:**										
436	**105193482**	21.757	08/13/2017 22:02	SIDESWIPE, SAME DIRECTION	$ 13500	0	0	0	1	2	5	3	1	0	0	
Unit	**1 :** 1	**Alchl/Drgs:** 0	**Speed:** 60 MPH	**Dir:** W	**Veh Mnvr/Ped Actn:** 4	**Obj Strk:**										
Unit	**2 :** 5	**Alchl/Drgs:** 0	**Speed:** 55 MPH	**Dir:** W	**Veh Mnvr/Ped Actn:** 4	**Obj Strk:**										
437	**105206479**	21.757	08/30/2017 08:57	REAR END, SLOW OR STOP	$ 1800	0	0	0	0	1	1	1	1	0	0	
Unit	**1 :** 2	**Alchl/Drgs:** 0	**Speed:** 60 MPH	**Dir:** N	**Veh Mnvr/Ped Actn:** 4	**Obj Strk:**										
Unit	**2 :** 4	**Alchl/Drgs:** 0	**Speed:** 60 MPH	**Dir:** N	**Veh Mnvr/Ped Actn:** 1	**Obj Strk:**										
438	**105229409**	21.757	09/21/2017 16:38	REAR END, SLOW OR STOP	$ 10000	0	0	0	0	1	1	1	1	0	0	
Unit	**1 :** 4	**Alchl/Drgs:** 0	**Speed:** 40 MPH	**Dir:** E	**Veh Mnvr/Ped Actn:** 4	**Obj Strk:**										
Unit	**2 :** 4	**Alchl/Drgs:** 0	**Speed:** 30 MPH	**Dir:** E	**Veh Mnvr/Ped Actn:** 11	**Obj Strk:**										
439	**105245552**	21.757	09/28/2017 20:43	SIDESWIPE, SAME DIRECTION	$ 3500	0	0	0	0	1	5	1	1	0	0	
Unit	**1 :** 14	**Alchl/Drgs:** 0	**Speed:** 10 MPH	**Dir:** W	**Veh Mnvr/Ped Actn:** 4	**Obj Strk:**										
Unit	**2 :** 4	**Alchl/Drgs:** 0	**Speed:** 15 MPH	**Dir:** W	**Veh Mnvr/Ped Actn:** 5	**Obj Strk:**										
440	**105262934**	21.757	10/23/2017 08:37	REAR END, SLOW OR STOP	$ 4600	0	0	0	0	3	1	3	1	0	0	
Unit	**1 :** 1	**Alchl/Drgs:** 0	**Speed:** 40 MPH	**Dir:** W	**Veh Mnvr/Ped Actn:** 4	**Obj Strk:**										
Unit	**2 :** 4	**Alchl/Drgs:** 0	**Speed:** 40 MPH	**Dir:** W	**Veh Mnvr/Ped Actn:** 11	**Obj Strk:**										
441	**105360367**	21.757	11/07/2017 18:01	REAR END, SLOW OR STOP	$ 6000	0	0	0	0	1	5	1	3	0	0	
Unit	**1 :** 4	**Alchl/Drgs:** 0	**Speed:** 60 MPH	**Dir:** E	**Veh Mnvr/Ped Actn:** 4	**Obj Strk:**										
Unit	**2 :** 1	**Alchl/Drgs:** 0	**Speed:** 60 MPH	**Dir:** E	**Veh Mnvr/Ped Actn:** 4	**Obj Strk:**										
Unit	**3 :** 1	**Alchl/Drgs:** 0	**Speed:** 0 MPH	**Dir:** E	**Veh Mnvr/Ped Actn:** 1	**Obj Strk:**										

DocuSign Envelope ID: 5C03745C-4B01-4834-A65D-B77F558A4F46

North Carolina Department of Transportation
Traffic Engineering Accident Analysis System
Strip Analysis Report

Acc No	Crash ID	Milepost	Date	Accident Type	Total Damage	Injuries F	A	B	C	Condition R	L	W	Road Ch	Ci	Trfc Ctl Dv	Op
442	**105296479**	21.757	11/17/2017 17:50	REAR END, SLOW OR STOP	$ 2000	0	0	0	0	1	5	1	1	0	0	
Unit	**1 :** 14	**Alchl/Drgs:** 0	**Speed:** 35 MPH	**Dir:** E	**Veh Mnvr/Ped Actn:** 4	**Obj Strk:**										
Unit	**2 :** 1	**Alchl/Drgs:** 0	**Speed:** 30 MPH	**Dir:** E	**Veh Mnvr/Ped Actn:** 11	**Obj Strk:**										
443	**105351787**	21.757	01/15/2018 14:43	REAR END, SLOW OR STOP	$ 10100	0	0	0	0	1	1	1	1	0	0	
Unit	**1 :** 4	**Alchl/Drgs:** 0	**Speed:** 60 MPH	**Dir:** E	**Veh Mnvr/Ped Actn:** 4	**Obj Strk:**										
Unit	**2 :** 4	**Alchl/Drgs:** 0	**Speed:** 0 MPH	**Dir:** E	**Veh Mnvr/Ped Actn:** 1	**Obj Strk:**										
Unit	**3 :** 4	**Alchl/Drgs:** 0	**Speed:** 0 MPH	**Dir:** E	**Veh Mnvr/Ped Actn:** 1	**Obj Strk:**										
Unit	**4 :** 1	**Alchl/Drgs:** 0	**Speed:** 0 MPH	**Dir:** E	**Veh Mnvr/Ped Actn:** 1	**Obj Strk:**										
444	**105400787**	21.757	02/01/2018 23:13	SIDESWIPE, SAME DIRECTION	$ 4500	0	0	0	0	1	5	1	1	0	0	
Unit	**1 :** 14	**Alchl/Drgs:** 0	**Speed:** 60 MPH	**Dir:** W	**Veh Mnvr/Ped Actn:** 5	**Obj Strk:**										
Unit	**2 :** 1	**Alchl/Drgs:** 0	**Speed:** 55 MPH	**Dir:** W	**Veh Mnvr/Ped Actn:** 4	**Obj Strk:**										
445	**105486647**	21.757	05/21/2018 17:30	REAR END, SLOW OR STOP	$ 1350	0	0	0	0	1	1	1	3	0	0	
Unit	**1 :** 2	**Alchl/Drgs:** 0	**Speed:** 20 MPH	**Dir:** E	**Veh Mnvr/Ped Actn:** 11	**Obj Strk:**										
Unit	**2 :** 1	**Alchl/Drgs:** 0	**Speed:** 10 MPH	**Dir:** E	**Veh Mnvr/Ped Actn:** 11	**Obj Strk:**										
Unit	**3 :** 1	**Alchl/Drgs:** 0	**Speed:** 0 MPH	**Dir:** E	**Veh Mnvr/Ped Actn:** 1	**Obj Strk:**										
446	**105486648**	21.757	05/21/2018 18:03	REAR END, SLOW OR STOP	$ 4000	0	0	1	0	1	1	1	3	0	0	
Unit	**1 :** 2	**Alchl/Drgs:** 0	**Speed:** 45 MPH	**Dir:** E	**Veh Mnvr/Ped Actn:** 4	**Obj Strk:**										
Unit	**2 :** 4	**Alchl/Drgs:** 0	**Speed:** 0 MPH	**Dir:** E	**Veh Mnvr/Ped Actn:** 1	**Obj Strk:**										
447	**105493691**	21.757	05/21/2018 18:04	REAR END, SLOW OR STOP	$ 3000	0	0	0	1	1	1	1	3	0	0	
Unit	**1 :** 4	**Alchl/Drgs:** 0	**Speed:** 35 MPH	**Dir:** E	**Veh Mnvr/Ped Actn:** 4	**Obj Strk:**										
Unit	**2 :** 2	**Alchl/Drgs:** 0	**Speed:** 0 MPH	**Dir:** E	**Veh Mnvr/Ped Actn:** 1	**Obj Strk:**										
448	**105494148**	21.757	05/29/2018 18:05	SIDESWIPE, SAME DIRECTION	$ 600	0	0	0	0	2	1	3	3	0	0	
Unit	**1 :** 1	**Alchl/Drgs:** 0	**Speed:** 60 MPH	**Dir:** E	**Veh Mnvr/Ped Actn:** 5	**Obj Strk:**										
Unit	**2 :** 5	**Alchl/Drgs:** 0	**Speed:** 60 MPH	**Dir:** E	**Veh Mnvr/Ped Actn:** 4	**Obj Strk:**										
449	**105512791**	21.757	06/15/2018 18:28	REAR END, SLOW OR STOP	$ 2000	0	0	0	0	1	1	1	1	0	0	
Unit	**1 :** 1	**Alchl/Drgs:** 0	**Speed:** 40 MPH	**Dir:** E	**Veh Mnvr/Ped Actn:** 4	**Obj Strk:**										
Unit	**2 :** 4	**Alchl/Drgs:** 0	**Speed:** 30 MPH	**Dir:** E	**Veh Mnvr/Ped Actn:** 11	**Obj Strk:**										
450	**105559734**	21.757	07/30/2018 05:52	REAR END, SLOW OR STOP	$ 7800	0	0	0	1	1	5	1	3	0	0	
Unit	**1 :** 12	**Alchl/Drgs:** 0	**Speed:** 45 MPH	**Dir:** N	**Veh Mnvr/Ped Actn:** 4	**Obj Strk:**										

All data presented in this report comes explicitly from the Traffic Engineering Accident Analysis System based upon va criteria provided by the report's creator. The onus is strictly upon the user of this report to exercise due diligence in in and further representing this data.

DocuSign Envelope ID: 5C03745C-4B01-4834-A65D-B77F558A4F46

North Carolina Department of Transportation
Traffic Engineering Accident Analysis System
Strip Analysis Report

Acc No	Crash ID	Milepost	Date	Accident Type	Total Damage	Injuries F	A	B	C	Condition R	L	W	Road Ch	Ci	Trfc Ctl Dv	Op
Unit	**2 :** 4	**Alchl/Drgs:**	0	**Speed:** 60 MPH	**Dir:** N	**Veh Mnvr/Ped Actn:**				4			**Obj Strk:**			
451	**105635748**	21.757	10/13/2018 12:02	REAR END, SLOW OR STOP	$ 2100	0	0	0	0	1	1	1	1	0	0	
Unit	**1 :** 4	**Alchl/Drgs:**	0	**Speed:** 55 MPH	**Dir:** N	**Veh Mnvr/Ped Actn:**				4			**Obj Strk:**			
Unit	**2 :** 4	**Alchl/Drgs:**	0	**Speed:** 55 MPH	**Dir:** N	**Veh Mnvr/Ped Actn:**				1			**Obj Strk:**			
452	**105658735**	21.757	11/01/2018 21:41	SIDESWIPE, SAME DIRECTION	$ 2200	0	0	0	0	2	5	3	1	0	0	
Unit	**1 :** 12	**Alchl/Drgs:**	0	**Speed:** 60 MPH	**Dir:** S	**Veh Mnvr/Ped Actn:**				5			**Obj Strk:**			
Unit	**2 :** 1	**Alchl/Drgs:**	0	**Speed:** 60 MPH	**Dir:** S	**Veh Mnvr/Ped Actn:**				4			**Obj Strk:**			
453	**105688530**	21.757	11/26/2018 18:10	REAR END, SLOW OR STOP	$ 2900	0	0	0	0	1	5	1	1	0	0	
Unit	**1 :** 1	**Alchl/Drgs:**	0	**Speed:** 50 MPH	**Dir:** S	**Veh Mnvr/Ped Actn:**				4			**Obj Strk:**			
Unit	**2 :** 4	**Alchl/Drgs:**	7	**Speed:** 55 MPH	**Dir:** S	**Veh Mnvr/Ped Actn:**				1			**Obj Strk:**			
Unit	**3 :** 5	**Alchl/Drgs:**	0	**Speed:** 55 MPH	**Dir:** S	**Veh Mnvr/Ped Actn:**				1			**Obj Strk:**			
454	**105711361**	21.757	12/14/2018 17:37	REAR END, SLOW OR STOP	$ 3000	0	0	0	0	2	5	3	1	0	0	
Unit	**1 :** 1	**Alchl/Drgs:**	0	**Speed:** 50 MPH	**Dir:** S	**Veh Mnvr/Ped Actn:**				4			**Obj Strk:**			
Unit	**2 :** 1	**Alchl/Drgs:**	0	**Speed:** 50 MPH	**Dir:** S	**Veh Mnvr/Ped Actn:**				1			**Obj Strk:**			
455	**104379860**	21.762	05/15/2015 11:54	REAR END, SLOW OR STOP	$ 1700	0	0	1	1	1	1	1	3	0	0	
Unit	**1 :** 2	**Alchl/Drgs:**	0	**Speed:** 55 MPH	**Dir:** W	**Veh Mnvr/Ped Actn:**				11			**Obj Strk:**			
Unit	**2 :** 4	**Alchl/Drgs:**	0	**Speed:** 55 MPH	**Dir:** W	**Veh Mnvr/Ped Actn:**				1			**Obj Strk:**			
Unit	**3 :** 1	**Alchl/Drgs:**	0	**Speed:** 55 MPH	**Dir:** W	**Veh Mnvr/Ped Actn:**				1			**Obj Strk:**			
456	**104652200**	21.762	02/19/2016 15:31	REAR END, SLOW OR STOP	$ 8000	0	0	0	0	1	1	1	3	0	0	
Unit	**1 :** 11	**Alchl/Drgs:**	0	**Speed:** 30 MPH	**Dir:** E	**Veh Mnvr/Ped Actn:**				4			**Obj Strk:**			
Unit	**2 :** 2	**Alchl/Drgs:**	0	**Speed:** 20 MPH	**Dir:** E	**Veh Mnvr/Ped Actn:**				11			**Obj Strk:**			
Unit	**3 :** 3	**Alchl/Drgs:**	0	**Speed:** 0 MPH	**Dir:** E	**Veh Mnvr/Ped Actn:**				1			**Obj Strk:**			
457	**104805360**	21.762	07/28/2016 13:02	OVERTURN/ROLLOVER	$ 1000	0	0	2	0	1	1	1	1	0	0	
Unit	**1 :** 20	**Alchl/Drgs:**	0	**Speed:** 35 MPH	**Dir:** W	**Veh Mnvr/Ped Actn:**				4			**Obj Strk:**			
458	**104812215**	21.762	08/06/2016 17:49	FIXED OBJECT	$ 700	0	0	0	0	1	1	1	1	0	0	
Unit	**1 :** 1	**Alchl/Drgs:**	0	**Speed:** 60 MPH	**Dir:** W	**Veh Mnvr/Ped Actn:**				4			**Obj Strk:**		44	
459	**105299303**	21.762	11/22/2017 16:01	REAR END, SLOW OR STOP	$ 3000	0	0	0	0	1	1	1	3	0	0	
Unit	**1 :** 4	**Alchl/Drgs:**	0	**Speed:** 40 MPH	**Dir:** E	**Veh Mnvr/Ped Actn:**				4			**Obj Strk:**			

DocuSign Envelope ID: 5C03745C-4B01-4834-A65D-B77F558A4F46

North Carolina Department of Transportation
Traffic Engineering Accident Analysis System
Strip Analysis Report

Acc No	Crash ID	Milepost	Date	Accident Type	Total Damage	Injuries F	A	B	C	Condition R	L	W	Road Ch	Ci	Trfc Ctl Dv	Op
Unit	**2 :** 4	**Alchl/Drgs:**	0	**Speed:** 40 MPH	**Dir:** E	**Veh Mnvr/Ped Actn:**				11			**Obj Strk:**			
460	**105430494**	21.762	03/31/2018 13:06	REAR END, SLOW OR STOP	$ 1200	0	0	0	0	1	1	1	7	0	0	
Unit	**1 :** 5	**Alchl/Drgs:**	0	**Speed:** 15 MPH	**Dir:** NW	**Veh Mnvr/Ped Actn:**				4			**Obj Strk:**			
Unit	**2 :** 1	**Alchl/Drgs:**	0	**Speed:** 15 MPH	**Dir:** NW	**Veh Mnvr/Ped Actn:**				4			**Obj Strk:**			
461	**104531828**	21.763	10/15/2015 18:35	REAR END, SLOW OR STOP	$ 5500	0	0	0	0	1	1	1	1	0	0	
Unit	**1 :** 4	**Alchl/Drgs:**	0	**Speed:** 60 MPH	**Dir:** W	**Veh Mnvr/Ped Actn:**				4			**Obj Strk:**			
Unit	**2 :** 4	**Alchl/Drgs:**	0	**Speed:** 60 MPH	**Dir:** W	**Veh Mnvr/Ped Actn:**				11			**Obj Strk:**			
462	**104979518**	21.763	01/18/2017 08:20	REAR END, SLOW OR STOP	$ 7000	0	0	0	1	1	1	1	1	0	0	
Unit	**1 :** 1	**Alchl/Drgs:**	0	**Speed:** 35 MPH	**Dir:** W	**Veh Mnvr/Ped Actn:**				4			**Obj Strk:**			
Unit	**2 :** 2	**Alchl/Drgs:**	0	**Speed:** 20 MPH	**Dir:** W	**Veh Mnvr/Ped Actn:**				1			**Obj Strk:**			
Unit	**3 :** 1	**Alchl/Drgs:**	7	**Speed:** 15 MPH	**Dir:** W	**Veh Mnvr/Ped Actn:**				11			**Obj Strk:**			
463	**105098274**	21.763	05/11/2017 16:36	REAR END, SLOW OR STOP	$ 12000	0	0	0	0	1	1	1	1	0	0	
Unit	**1 :** 4	**Alchl/Drgs:**	0	**Speed:** 35 MPH	**Dir:** W	**Veh Mnvr/Ped Actn:**				4			**Obj Strk:**			
Unit	**2 :** 1	**Alchl/Drgs:**	0	**Speed:** 35 MPH	**Dir:** W	**Veh Mnvr/Ped Actn:**				11			**Obj Strk:**			
Unit	**3 :** 1	**Alchl/Drgs:**	0	**Speed:** 35 MPH	**Dir:** W	**Veh Mnvr/Ped Actn:**				11			**Obj Strk:**			
464	**105232187**	21.763	09/25/2017 15:06	REAR END, SLOW OR STOP	$ 3900	0	0	0	0	1	1	1	1	0	0	
Unit	**1 :** 1	**Alchl/Drgs:**	0	**Speed:** 55 MPH	**Dir:** N	**Veh Mnvr/Ped Actn:**				4			**Obj Strk:**			
Unit	**2 :** 1	**Alchl/Drgs:**	0	**Speed:** 55 MPH	**Dir:** N	**Veh Mnvr/Ped Actn:**				11			**Obj Strk:**			
465	**105233425**	21.763	09/25/2017 15:31	REAR END, SLOW OR STOP	$ 1700	0	0	0	0	1	1	1	1	0	0	
Unit	**1 :** 1	**Alchl/Drgs:**	0	**Speed:** 55 MPH	**Dir:** N	**Veh Mnvr/Ped Actn:**				4			**Obj Strk:**			
Unit	**2 :** 2	**Alchl/Drgs:**	0	**Speed:** 55 MPH	**Dir:** N	**Veh Mnvr/Ped Actn:**				1			**Obj Strk:**			
466	**105462351**	21.763	04/27/2018 12:56	REAR END, SLOW OR STOP	$ 1500	0	0	0	0	1	1	1	1	0	0	
Unit	**1 :** 12	**Alchl/Drgs:**	0	**Speed:** 50 MPH	**Dir:** N	**Veh Mnvr/Ped Actn:**				11			**Obj Strk:**			
Unit	**2 :** 10	**Alchl/Drgs:**	0	**Speed:** 50 MPH	**Dir:** N	**Veh Mnvr/Ped Actn:**				4			**Obj Strk:**			
467	**105234571**	21.771	09/27/2017 19:34	REAR END, SLOW OR STOP	$ 3500	0	0	0	0	1	5	1	1	0	0	
Unit	**1 :** 4	**Alchl/Drgs:**	0	**Speed:** 45 MPH	**Dir:** W	**Veh Mnvr/Ped Actn:**				4			**Obj Strk:**			
Unit	**2 :** 1	**Alchl/Drgs:**	0	**Speed:** 45 MPH	**Dir:** W	**Veh Mnvr/Ped Actn:**				11			**Obj Strk:**			

DocuSign Envelope ID: 5C03745C-4B01-4834-A65D-B77F558A4F46

North Carolina Department of Transportation
Traffic Engineering Accident Analysis System
Strip Analysis Report

Acc No	Crash ID	Milepost	Date	Accident Type	Total Damage	Injuries F	A	B	C	Condition R	L	W	Road Ch	Ci	Trfc Ctl Dv	Op
468	**105454562**	21.771	04/22/2018 15:36	REAR END, SLOW OR STOP	$ 4500	0	0	0	0	1	1	2	1	0	0	
Unit	**1 :** 1	**Alchl/Drgs:** 0	**Speed:** 20 MPH	**Dir:** SE	**Veh Mnvr/Ped Actn:** 4	**Obj Strk:**										
Unit	**2 :** 1	**Alchl/Drgs:** 0	**Speed:** 5 MPH	**Dir:** SE	**Veh Mnvr/Ped Actn:** 11	**Obj Strk:**										
469	**104522953**	21.781	10/18/2015 12:37	REAR END, SLOW OR STOP	$ 8000	0	0	0	0	1	1	1	3	0	0	
Unit	**1 :** 4	**Alchl/Drgs:** 0	**Speed:** 50 MPH	**Dir:** W	**Veh Mnvr/Ped Actn:** 4	**Obj Strk:**										
Unit	**2 :** 4	**Alchl/Drgs:** 0	**Speed:** 50 MPH	**Dir:** W	**Veh Mnvr/Ped Actn:** 11	**Obj Strk:**										
470	**105583045**	21.790	08/22/2018 17:23	REAR END, SLOW OR STOP	$ 27000	0	0	0	3	1	1	1	1	0	0	
Unit	**1 :** 14	**Alchl/Drgs:** 0	**Speed:** 45 MPH	**Dir:** W	**Veh Mnvr/Ped Actn:** 4	**Obj Strk:**										
Unit	**2 :** 1	**Alchl/Drgs:** 0	**Speed:** 45 MPH	**Dir:** W	**Veh Mnvr/Ped Actn:** 11	**Obj Strk:**										
Unit	**3 :** 1	**Alchl/Drgs:** 0	**Speed:** 45 MPH	**Dir:** W	**Veh Mnvr/Ped Actn:** 11	**Obj Strk:**										
Unit	**4 :** 1	**Alchl/Drgs:** 0	**Speed:** 45 MPH	**Dir:** W	**Veh Mnvr/Ped Actn:** 11	**Obj Strk:**										
471	**104547555**	21.800	11/09/2015 09:20	REAR END, SLOW OR STOP	$ 1100	0	0	0	0	2	1	2	3	0	0	
Unit	**1 :** 12	**Alchl/Drgs:** 0	**Speed:** 10 MPH	**Dir:** W	**Veh Mnvr/Ped Actn:** 4	**Obj Strk:**										
Unit	**2 :** 1	**Alchl/Drgs:** 0	**Speed:** 10 MPH	**Dir:** W	**Veh Mnvr/Ped Actn:** 1	**Obj Strk:**										
472	**105152021**	21.810	07/05/2017 15:54	REAR END, SLOW OR STOP	$ 2500	0	0	0	1	1	1	2	3	0	0	
Unit	**1 :** 1	**Alchl/Drgs:** 0	**Speed:** 45 MPH	**Dir:** W	**Veh Mnvr/Ped Actn:** 4	**Obj Strk:**										
Unit	**2 :** 4	**Alchl/Drgs:** 0	**Speed:** 45 MPH	**Dir:** W	**Veh Mnvr/Ped Actn:** 1	**Obj Strk:**										
473	**105485278**	21.810	05/20/2018 13:04	REAR END, SLOW OR STOP	$ 1200	0	0	0	0	1	1	1	7	0	0	
Unit	**1 :** 1	**Alchl/Drgs:** 0	**Speed:** 60 MPH	**Dir:** W	**Veh Mnvr/Ped Actn:** 11	**Obj Strk:**										
Unit	**2 :** 4	**Alchl/Drgs:** 0	**Speed:** 60 MPH	**Dir:** W	**Veh Mnvr/Ped Actn:** 11	**Obj Strk:**										
474	**105219476**	21.857	09/13/2017 08:01	REAR END, SLOW OR STOP	$ 7000	0	0	0	2	1	1	2	1	0	0	
Unit	**1 :** 4	**Alchl/Drgs:** 0	**Speed:** 45 MPH	**Dir:** NW	**Veh Mnvr/Ped Actn:** 4	**Obj Strk:**										
Unit	**2 :** 4	**Alchl/Drgs:** 0	**Speed:** 45 MPH	**Dir:** NW	**Veh Mnvr/Ped Actn:** 1	**Obj Strk:**										
475	**104098221**	21.862	06/29/2014 13:39	REAR END, SLOW OR STOP	$ 1600	0	0	0	0	1	1	1	1	0	0	
Unit	**1 :** 1	**Alchl/Drgs:** 0	**Speed:** 50 MPH	**Dir:** E	**Veh Mnvr/Ped Actn:** 4	**Obj Strk:**										
Unit	**2 :** 1	**Alchl/Drgs:** 0	**Speed:** 50 MPH	**Dir:** E	**Veh Mnvr/Ped Actn:** 1	**Obj Strk:**										
476	**104380209**	21.862	05/17/2015 11:42	REAR END, SLOW OR STOP	$ 4000	0	0	0	2	1	1	2	1	0	0	
Unit	**1 :** 1	**Alchl/Drgs:** 0	**Speed:** 50 MPH	**Dir:** NW	**Veh Mnvr/Ped Actn:** 4	**Obj Strk:**										
Unit	**2 :** 1	**Alchl/Drgs:** 0	**Speed:** 10 MPH	**Dir:** NW	**Veh Mnvr/Ped Actn:** 11	**Obj Strk:**										

DocuSign Envelope ID: 5C03745C-4B01-4834-A65D-B77F558A4F46

North Carolina Department of Transportation
Traffic Engineering Accident Analysis System
Strip Analysis Report

Acc No	Crash ID	Milepost	Date	Accident Type	Total Damage	Injuries F	A	B	C	Condition R	L	W	Road Ch	Ci	Trfc Ctl Dv	Op
477	**104392008**	21.862	05/30/2015 14:25	REAR END, SLOW OR STOP	$ 11000	0	0	0	6	1	1	2	1	0	0	
Unit	**1 :** 5	**Alchl/Drgs:** 0	**Speed:** 40 MPH	**Dir:** NW	**Veh Mnvr/Ped Actn:** 4	**Obj Strk:**										
Unit	**2 :** 4	**Alchl/Drgs:** 0	**Speed:** 30 MPH	**Dir:** NW	**Veh Mnvr/Ped Actn:** 11	**Obj Strk:**										
478	**104415320**	21.862	06/23/2015 06:06	SIDESWIPE, SAME DIRECTION	$ 1200	0	0	0	0	1	3	1	1	0	0	
Unit	**1 :** 10	**Alchl/Drgs:** 0	**Speed:** 55 MPH	**Dir:** S	**Veh Mnvr/Ped Actn:** 1	**Obj Strk:**										
Unit	**2 :** 32	**Alchl/Drgs:** 7	**Speed:** 60 MPH	**Dir:** S	**Veh Mnvr/Ped Actn:** 5	**Obj Strk:**										
479	**104424852**	21.862	07/02/2015 12:21	REAR END, SLOW OR STOP	$ 1000	0	0	0	0	1	1	2	1	0	0	
Unit	**1 :** 2	**Alchl/Drgs:** 7	**Speed:** 60 MPH	**Dir:** W	**Veh Mnvr/Ped Actn:** 4	**Obj Strk:**										
Unit	**2 :** 1	**Alchl/Drgs:** 0	**Speed:** 35 MPH	**Dir:** W	**Veh Mnvr/Ped Actn:** 1	**Obj Strk:**										
480	**104691755**	21.862	04/01/2016 12:05	REAR END, SLOW OR STOP	$ 7000	0	0	0	0	1	1	1	1	0	0	
Unit	**1 :** 4	**Alchl/Drgs:** 0	**Speed:** 60 MPH	**Dir:** N	**Veh Mnvr/Ped Actn:** 4	**Obj Strk:**										
Unit	**2 :** 4	**Alchl/Drgs:** 0	**Speed:** 60 MPH	**Dir:** N	**Veh Mnvr/Ped Actn:** 1	**Obj Strk:**										
481	**105115946**	21.862	05/30/2017 07:57	REAR END, SLOW OR STOP	$ 1700	0	0	0	0	1	1	2	5	0	0	
Unit	**1 :** 3	**Alchl/Drgs:** 0	**Speed:** 60 MPH	**Dir:** S	**Veh Mnvr/Ped Actn:** 4	**Obj Strk:**										
Unit	**2 :** 4	**Alchl/Drgs:** 0	**Speed:** 60 MPH	**Dir:** S	**Veh Mnvr/Ped Actn:** 11	**Obj Strk:**										
482	**105181496**	21.862	08/04/2017 16:46	REAR END, SLOW OR STOP	$ 15000	0	0	0	0	1	1	1	1	0	0	
Unit	**1 :** 4	**Alchl/Drgs:** 0	**Speed:** 45 MPH	**Dir:** E	**Veh Mnvr/Ped Actn:** 4	**Obj Strk:**										
Unit	**2 :** 1	**Alchl/Drgs:** 0	**Speed:** 45 MPH	**Dir:** E	**Veh Mnvr/Ped Actn:** 1	**Obj Strk:**										
Unit	**3 :** 4	**Alchl/Drgs:** 0	**Speed:** 45 MPH	**Dir:** E	**Veh Mnvr/Ped Actn:** 1	**Obj Strk:**										
483	**105257710**	21.862	10/18/2017 20:06	REAR END, SLOW OR STOP	$ 5000	0	0	0	0	1	5	1	1	0	0	
Unit	**1 :** 1	**Alchl/Drgs:** 0	**Speed:** 10 MPH	**Dir:** W	**Veh Mnvr/Ped Actn:** 4	**Obj Strk:**										
Unit	**2 :** 1	**Alchl/Drgs:** 0	**Speed:** 10 MPH	**Dir:** W	**Veh Mnvr/Ped Actn:** 1	**Obj Strk:**										
484	**105298940**	21.862	11/20/2017 07:40	REAR END, SLOW OR STOP	$ 32100	0	0	0	2	1	1	1	1	0	0	
Unit	**1 :** 2	**Alchl/Drgs:** 0	**Speed:** 55 MPH	**Dir:** E	**Veh Mnvr/Ped Actn:** 4	**Obj Strk:**										
Unit	**2 :** 1	**Alchl/Drgs:** 0	**Speed:** 45 MPH	**Dir:** E	**Veh Mnvr/Ped Actn:** 11	**Obj Strk:** 44										
Unit	**3 :** 4	**Alchl/Drgs:** 0	**Speed:** 30 MPH	**Dir:** E	**Veh Mnvr/Ped Actn:** 11	**Obj Strk:** 42										
Unit	**4 :** 4	**Alchl/Drgs:** 0	**Speed:** 20 MPH	**Dir:** E	**Veh Mnvr/Ped Actn:** 11	**Obj Strk:**										

All data presented in this report comes explicitly from the Traffic Engineering Accident Analysis System based upon va criteria provided by the report's creator. The onus is strictly upon the user of this report to exercise due diligence in in and further representing this data.

DocuSign Envelope ID: 5C03745C-4B01-4834-A65D-B77F558A4F46

North Carolina Department of Transportation
Traffic Engineering Accident Analysis System
Strip Analysis Report

Acc No	Crash ID	Milepost	Date	Accident Type	Total Damage	Injuries F	A	B	C	Condition R	L	W	Road Ch	Ci	Trfc Ctl Dv	Op
485	**105332225**	21.862	12/23/2017 15:35	REAR END, SLOW OR STOP	$ 5000	0	0	0	0	2	1	3	1	0	0	
Unit	**1 :** 1	**Alchl/Drgs:** 0	**Speed:** 50 MPH	**Dir:** E	**Veh Mnvr/Ped Actn:** 4							**Obj Strk:**				
Unit	**2 :** 2	**Alchl/Drgs:** 0	**Speed:** 0 MPH	**Dir:** E	**Veh Mnvr/Ped Actn:** 4							**Obj Strk:**				
486	**105477290**	21.862	05/11/2018 15:35	REAR END, SLOW OR STOP	$ 2000	0	0	0	0	1	1	2	1	0	0	
Unit	**1 :** 1	**Alchl/Drgs:** 0	**Speed:** 35 MPH	**Dir:** W	**Veh Mnvr/Ped Actn:** 4							**Obj Strk:**				
Unit	**2 :** 4	**Alchl/Drgs:** 0	**Speed:** 35 MPH	**Dir:** W	**Veh Mnvr/Ped Actn:** 1							**Obj Strk:**				
487	**105723966**	21.862	12/26/2018 19:01	REAR END, SLOW OR STOP	$ 2000	0	0	0	0	1	5	1	1	0	0	
Unit	**1 :** 2	**Alchl/Drgs:** 0	**Speed:** 10 MPH	**Dir:** E	**Veh Mnvr/Ped Actn:** 4							**Obj Strk:**				
Unit	**2 :** 1	**Alchl/Drgs:** 0	**Speed:** 0 MPH	**Dir:** E	**Veh Mnvr/Ped Actn:** 1							**Obj Strk:**				
488	**104366530**	21.878	05/01/2015 16:46	REAR END, SLOW OR STOP	$ 1800	0	0	0	1	1	1	1	3	0	0	
Unit	**1 :** 20	**Alchl/Drgs:** 0	**Speed:** 35 MPH	**Dir:** W	**Veh Mnvr/Ped Actn:** 4							**Obj Strk:**				
Unit	**2 :** 1	**Alchl/Drgs:** 0	**Speed:** 35 MPH	**Dir:** W	**Veh Mnvr/Ped Actn:** 1							**Obj Strk:**				
489	**104709569**	21.910	04/21/2016 12:45	REAR END, SLOW OR STOP	$ 5000	0	0	0	1	1	5	1	3	0	0	
Unit	**1 :** 1	**Alchl/Drgs:** 7	**Speed:** 70 MPH	**Dir:** S	**Veh Mnvr/Ped Actn:** 4							**Obj Strk:**				
Unit	**2 :** 1	**Alchl/Drgs:** 0	**Speed:** 60 MPH	**Dir:** S	**Veh Mnvr/Ped Actn:** 4							**Obj Strk:**				
490	**104247356**	21.920	12/18/2014 17:12	REAR END, SLOW OR STOP	$ 2300	0	0	0	0	1	1	1	3	0	0	
Unit	**1 :** 4	**Alchl/Drgs:** 0	**Speed:** 45 MPH	**Dir:** W	**Veh Mnvr/Ped Actn:** 4							**Obj Strk:**				
Unit	**2 :** 2	**Alchl/Drgs:** 0	**Speed:** 45 MPH	**Dir:** W	**Veh Mnvr/Ped Actn:** 1							**Obj Strk:**				
491	**104480614**	21.957	09/04/2015 12:33	REAR END, SLOW OR STOP	$ 2300	0	0	0	0	1	1	1	1	0	0	
Unit	**1 :** 1	**Alchl/Drgs:** 0	**Speed:** 20 MPH	**Dir:** N	**Veh Mnvr/Ped Actn:** 1							**Obj Strk:**				
Unit	**2 :** 2	**Alchl/Drgs:** 0	**Speed:** 20 MPH	**Dir:** N	**Veh Mnvr/Ped Actn:** 4							**Obj Strk:**				
492	**105245180**	21.957	10/06/2017 08:09	SIDESWIPE, SAME DIRECTION	$ 2500	0	0	0	0	1	1	1	1	0	0	
Unit	**1 :** 14	**Alchl/Drgs:** 0	**Speed:** 60 MPH	**Dir:** NW	**Veh Mnvr/Ped Actn:** 5							**Obj Strk:**				
Unit	**2 :** 14	**Alchl/Drgs:** 0	**Speed:** 30 MPH	**Dir:** NW	**Veh Mnvr/Ped Actn:** 4							**Obj Strk:**				
493	**104235102**	21.962	11/25/2014 18:13	FIXED OBJECT	$ 2300	0	0	0	0	1	5	1	3	0	0	
Unit	**1 :** 1	**Alchl/Drgs:** 0	**Speed:** 70 MPH	**Dir:** E	**Veh Mnvr/Ped Actn:** 4							**Obj Strk:** 44				

DocuSign Envelope ID: 5C03745C-4B01-4834-A65D-B77F558A4F46

North Carolina Department of Transportation
Traffic Engineering Accident Analysis System
Strip Analysis Report

Acc No	Crash ID	Milepost	Date	Accident Type	Total Damage	Injuries F	A	B	C	Condition R	L	W	Road Ch	Ci	Trfc Ctl Dv	Op
494	**104453110**	21.962	08/06/2015 13:52	FIXED OBJECT	$ 2800	0	0	2	0	1	1	2	5	0	0	
Unit	**1 :** 1	**Alchl/Drgs:** 0	**Speed:** 60 MPH	**Dir:** S	**Veh Mnvr/Ped Actn:** 4	**Obj Strk:** 44										
495	**104705728**	21.962	04/14/2016 01:53	OVERTURN/ROLLOVER	$ 8000	0	0	0	1	1	5	1	1	0	0	
Unit	**1 :** 4	**Alchl/Drgs:** 0	**Speed:** 60 MPH	**Dir:** E	**Veh Mnvr/Ped Actn:** 4	**Obj Strk:**										
496	**105149693**	21.962	06/29/2017 15:45	REAR END, SLOW OR STOP	$ 3000	0	0	0	0	1	1	1	1	0	0	
Unit	**1 :** 2	**Alchl/Drgs:** 0	**Speed:** 45 MPH	**Dir:** W	**Veh Mnvr/Ped Actn:** 4	**Obj Strk:**										
Unit	**2 :** 1	**Alchl/Drgs:** 0	**Speed:** 45 MPH	**Dir:** W	**Veh Mnvr/Ped Actn:** 1	**Obj Strk:**										
497	**105386159**	21.962	02/16/2018 15:39	REAR END, SLOW OR STOP	$ 2500	0	0	0	0	2	1	2	7	0	0	
Unit	**1 :** 1	**Alchl/Drgs:** 0	**Speed:** 45 MPH	**Dir:** E	**Veh Mnvr/Ped Actn:** 4	**Obj Strk:**										
Unit	**2 :** 2	**Alchl/Drgs:** 0	**Speed:** 45 MPH	**Dir:** E	**Veh Mnvr/Ped Actn:** 11	**Obj Strk:**										
498	**105414726**	21.962	03/17/2018 13:51	REAR END, SLOW OR STOP	$ 7500	0	0	0	1	1	1	1	7	0	0	
Unit	**1 :** 2	**Alchl/Drgs:** 0	**Speed:** 30 MPH	**Dir:** W	**Veh Mnvr/Ped Actn:** 4	**Obj Strk:**										
Unit	**2 :** 2	**Alchl/Drgs:** 0	**Speed:** 25 MPH	**Dir:** W	**Veh Mnvr/Ped Actn:** 11	**Obj Strk:**										
499	**105433839**	21.962	04/03/2018 16:56	OVERTURN/ROLLOVER	$ 9800	0	0	0	1	1	1	1	1	0	0	
Unit	**1 :** 2	**Alchl/Drgs:** 0	**Speed:** 60 MPH	**Dir:** W	**Veh Mnvr/Ped Actn:** 4	**Obj Strk:** 42										
500	**105542859**	21.962	07/16/2018 12:57	MOVABLE OBJECT	$ 4500	0	0	0	0	1	1	2	5	0	0	
Unit	**1 :** 11	**Alchl/Drgs:** 0	**Speed:** 60 MPH	**Dir:** E	**Veh Mnvr/Ped Actn:** 4	**Obj Strk:**										
Unit	**2 :** 4	**Alchl/Drgs:** 0	**Speed:** 60 MPH	**Dir:** E	**Veh Mnvr/Ped Actn:** 15	**Obj Strk:** 18										
Unit	**3 :** 1	**Alchl/Drgs:** 0	**Speed:** 60 MPH	**Dir:** E	**Veh Mnvr/Ped Actn:** 15	**Obj Strk:** 18										
Unit	**4 :** 1	**Alchl/Drgs:** 0	**Speed:** 60 MPH	**Dir:** E	**Veh Mnvr/Ped Actn:** 15	**Obj Strk:** 18										
Unit	**5 :** 1	**Alchl/Drgs:** 0	**Speed:** 60 MPH	**Dir:** E	**Veh Mnvr/Ped Actn:** 15	**Obj Strk:** 18										
501	**105547961**	21.962	07/21/2018 03:04	FIXED OBJECT	$ 8000	0	0	0	0	2	5	2	3	0	0	
Unit	**1 :** 1	**Alchl/Drgs:** 1	**Speed:** 60 MPH	**Dir:** E	**Veh Mnvr/Ped Actn:** 4	**Obj Strk:** 42										
502	**105695007**	21.962	11/30/2018 18:47	SIDESWIPE, SAME DIRECTION	$ 7800	0	0	0	2	2	5	2	3	0	0	
Unit	**1 :** 12	**Alchl/Drgs:** 0	**Speed:** 50 MPH	**Dir:** W	**Veh Mnvr/Ped Actn:** 5	**Obj Strk:**										
Unit	**2 :** 1	**Alchl/Drgs:** 0	**Speed:** 55 MPH	**Dir:** W	**Veh Mnvr/Ped Actn:** 4	**Obj Strk:**										

All data presented in this report comes explicitly from the Traffic Engineering Accident Analysis System based upon va criteria provided by the report's creator. The onus is strictly upon the user of this report to exercise due diligence in in and further representing this data.

DocuSign Envelope ID: 5C03745C-4B01-4834-A65D-B77F558A4F46

North Carolina Department of Transportation
Traffic Engineering Accident Analysis System
Strip Analysis Report

Acc No	Crash ID	Milepost	Date	Accident Type	Total Damage	Injuries F	A	B	C	Condition R	L	W	Road Ch	Ci	Trfc Ctl Dv	Op
503	**105261517**	21.963	10/18/2017 16:15	REAR END, SLOW OR STOP	$ 4500	0	0	1	0	1	1	1	1	0	0	
Unit	**1 :** 1	**Alchl/Drgs:**	0	**Speed:** 50 MPH	**Dir:** W	**Veh Mnvr/Ped Actn:**				4			**Obj Strk:**			
Unit	**2 :** 1	**Alchl/Drgs:**	0	**Speed:** 0 MPH	**Dir:** W	**Veh Mnvr/Ped Actn:**				4			**Obj Strk:**			
504	**105262676**	21.963	10/23/2017 12:54	FIXED OBJECT	$ 4000	0	0	0	0	2	1	3	1	0	0	
Unit	**1 :** 4	**Alchl/Drgs:**	0	**Speed:** 60 MPH	**Dir:** W	**Veh Mnvr/Ped Actn:**				4			**Obj Strk:**		44	
505	**105264113**	22.002	10/24/2017 00:06	SIDESWIPE, OPPOSITE DIRECTION	$ 6000	0	0	0	0	1	5	2	7	0		
Unit	**1 :** 1	**Alchl/Drgs:**	7	**Speed:** 125 MPH	**Dir:** W	**Veh Mnvr/Ped Actn:**				4			**Obj Strk:**		42	
Unit	**2 :** 1	**Alchl/Drgs:**	0	**Speed:** 60 MPH	**Dir:** W	**Veh Mnvr/Ped Actn:**				4			**Obj Strk:**			
506	**104433143**	22.010	07/02/2015 18:39	REAR END, SLOW OR STOP	$ 2200	0	0	0	0	1	1	1	3	0		2
Unit	**1 :** 1	**Alchl/Drgs:**	0	**Speed:** 60 MPH	**Dir:** E	**Veh Mnvr/Ped Actn:**				11			**Obj Strk:**			
Unit	**2 :** 1	**Alchl/Drgs:**	0	**Speed:** 60 MPH	**Dir:** E	**Veh Mnvr/Ped Actn:**				11			**Obj Strk:**			
507	**104447336**	22.010	07/28/2015 12:29	MOVABLE OBJECT	$ 800	0	0	0	0	1	1	1	7	0	0	
Unit	**1 :** 14	**Alchl/Drgs:**	0	**Speed:** 55 MPH	**Dir:** E	**Veh Mnvr/Ped Actn:**				4			**Obj Strk:**			
Unit	**2 :** 25	**Alchl/Drgs:**	0	**Speed:** 55 MPH	**Dir:** E	**Veh Mnvr/Ped Actn:**				4			**Obj Strk:**			
508	**104472516**	22.010	08/17/2015 05:04	OTHER COLLISION WITH VEHICLE	$ 2000	0	0	0	0	1	4	1	3	0	0	1
Unit	**1 :** 32	**Alchl/Drgs:**	7	**Speed:** 60 MPH	**Dir:** E	**Veh Mnvr/Ped Actn:**				4			**Obj Strk:**			
Unit	**2 :** 4	**Alchl/Drgs:**	0	**Speed:** 50 MPH	**Dir:** E	**Veh Mnvr/Ped Actn:**				4			**Obj Strk:**			
509	**104478570**	22.010	09/02/2015 17:52	REAR END, SLOW OR STOP	$ 3000	0	0	0	0	1	1	2	1	0	0	
Unit	**1 :** 4	**Alchl/Drgs:**	0	**Speed:** 50 MPH	**Dir:** N	**Veh Mnvr/Ped Actn:**				4			**Obj Strk:**			
Unit	**2 :** 4	**Alchl/Drgs:**	0	**Speed:** 50 MPH	**Dir:** N	**Veh Mnvr/Ped Actn:**				1			**Obj Strk:**			
510	**104547462**	22.010	11/06/2015 16:18	SIDESWIPE, SAME DIRECTION	$ 300	0	0	0	0	1	1	1	7	0	0	
Unit	**1 :** 5	**Alchl/Drgs:**	0	**Speed:** 60 MPH	**Dir:** W	**Veh Mnvr/Ped Actn:**				5			**Obj Strk:**			
Unit	**2 :** 1	**Alchl/Drgs:**	0	**Speed:** 60 MPH	**Dir:** W	**Veh Mnvr/Ped Actn:**				4			**Obj Strk:**			
511	**104600588**	22.010	12/23/2015 17:02	REAR END, SLOW OR STOP	$ 700	0	0	0	0	2	1	2	1	0	0	
Unit	**1 :** 1	**Alchl/Drgs:**	0	**Speed:** 55 MPH	**Dir:** E	**Veh Mnvr/Ped Actn:**				11			**Obj Strk:**			
Unit	**2 :** 5	**Alchl/Drgs:**	0	**Speed:** 55 MPH	**Dir:** E	**Veh Mnvr/Ped Actn:**				4			**Obj Strk:**			

DocuSign Envelope ID: 5C03745C-4B01-4834-A65D-B77F558A4F46

North Carolina Department of Transportation
Traffic Engineering Accident Analysis System
Strip Analysis Report

Acc No	Crash ID	Milepost	Date	Accident Type	Total Damage	Injuries F	A	B	C	Condition R	L	W	Road Ch	Ci	Trfc Ctl Dv	Op
512	**104672610**	22.010	03/11/2016 17:17	SIDESWIPE, SAME DIRECTION	$ 2000	0	0	0	0	1	1	1	1	0	0	
Unit	**1 :** 32	**Alchl/Drgs:** 7	**Speed:** 60 MPH	**Dir:** W	**Veh Mnvr/Ped Actn:** 4					**Obj Strk:**						
Unit	**2 :** 10	**Alchl/Drgs:** 0	**Speed:** 60 MPH	**Dir:** W	**Veh Mnvr/Ped Actn:** 4					**Obj Strk:**						
513	**104763272**	22.010	06/08/2016 18:03	FIXED OBJECT	$ 3000	0	0	0	0	1	1	1	3	0	0	
Unit	**1 :** 14	**Alchl/Drgs:** 0	**Speed:** 45 MPH	**Dir:** S	**Veh Mnvr/Ped Actn:** 4					**Obj Strk:** 44						
514	**104921045**	22.010	11/21/2016 07:53	REAR END, SLOW OR STOP	$ 2200	0	0	0	0	1	1	1	1	0	0	
Unit	**1 :** 1	**Alchl/Drgs:** 0	**Speed:** 30 MPH	**Dir:** S	**Veh Mnvr/Ped Actn:** 4					**Obj Strk:**						
Unit	**2 :** 1	**Alchl/Drgs:** 0	**Speed:** 0 MPH	**Dir:** S	**Veh Mnvr/Ped Actn:** 1					**Obj Strk:**						
Unit	**3 :** 4	**Alchl/Drgs:** 0	**Speed:** 0 MPH	**Dir:** S	**Veh Mnvr/Ped Actn:** 1					**Obj Strk:**						
515	**105088730**	22.010	04/27/2017 16:34	REAR END, SLOW OR STOP	$ 2600	0	0	0	0	2	1	3	3	0	0	
Unit	**1 :** 5	**Alchl/Drgs:** 0	**Speed:** 30 MPH	**Dir:** W	**Veh Mnvr/Ped Actn:** 4					**Obj Strk:**						
Unit	**2 :** 1	**Alchl/Drgs:** 0	**Speed:** 30 MPH	**Dir:** W	**Veh Mnvr/Ped Actn:** 1					**Obj Strk:**						
Unit	**3 :** 1	**Alchl/Drgs:** 7	**Speed:** 30 MPH	**Dir:** W	**Veh Mnvr/Ped Actn:** 1					**Obj Strk:**						
516	**105220547**	22.010	09/13/2017 16:51	REAR END, SLOW OR STOP	$ 1600	0	0	0	0	1	1	2	3	0	0	
Unit	**1 :** 1	**Alchl/Drgs:** 0	**Speed:** 25 MPH	**Dir:** S	**Veh Mnvr/Ped Actn:** 4					**Obj Strk:**						
Unit	**2 :** 1	**Alchl/Drgs:** 0	**Speed:** 0 MPH	**Dir:** S	**Veh Mnvr/Ped Actn:** 1					**Obj Strk:**						
517	**105347246**	22.010	01/09/2018 17:26	REAR END, SLOW OR STOP	$ 3500	0	0	0	0	1	1	2	1	0	0	
Unit	**1 :** 2	**Alchl/Drgs:** 0	**Speed:** 45 MPH	**Dir:** W	**Veh Mnvr/Ped Actn:** 4					**Obj Strk:**						
Unit	**2 :** 2	**Alchl/Drgs:** 0	**Speed:** 0 MPH	**Dir:** W	**Veh Mnvr/Ped Actn:** 1					**Obj Strk:**						
518	**105454128**	22.010	04/20/2018 07:50	REAR END, SLOW OR STOP	$ 2200	0	0	0	0	1	1	1	3	0	0	
Unit	**1 :** 2	**Alchl/Drgs:** 0	**Speed:** 45 MPH	**Dir:** S	**Veh Mnvr/Ped Actn:** 4					**Obj Strk:**						
Unit	**2 :** 4	**Alchl/Drgs:** 0	**Speed:** 0 MPH	**Dir:** S	**Veh Mnvr/Ped Actn:** 1					**Obj Strk:**						
519	**105512433**	22.010	06/14/2018 08:03	REAR END, SLOW OR STOP	$ 5000	0	0	0	0	1	1	1	1	0	0	
Unit	**1 :** 4	**Alchl/Drgs:** 0	**Speed:** 45 MPH	**Dir:** W	**Veh Mnvr/Ped Actn:** 4					**Obj Strk:**						
Unit	**2 :** 2	**Alchl/Drgs:** 0	**Speed:** 0 MPH	**Dir:** W	**Veh Mnvr/Ped Actn:** 1					**Obj Strk:**						
Unit	**3 :** 2	**Alchl/Drgs:** 0	**Speed:** 0 MPH	**Dir:** W	**Veh Mnvr/Ped Actn:** 1					**Obj Strk:**						
520	**105528457**	22.010	06/29/2018 18:06	REAR END, SLOW OR STOP	$ 2000	0	0	0	1	1	1	1	1	0	0	
Unit	**1 :** 32	**Alchl/Drgs:** 7	**Speed:** 55 MPH	**Dir:** E	**Veh Mnvr/Ped Actn:** 4					**Obj Strk:**						
Unit	**2 :** 1	**Alchl/Drgs:** 0	**Speed:** 55 MPH	**Dir:** E	**Veh Mnvr/Ped Actn:** 11					**Obj Strk:**						

All data presented in this report comes explicitly from the Traffic Engineering Accident Analysis System based upon va criteria provided by the report's creator. The onus is strictly upon the user of this report to exercise due diligence in in and further representing this data.

DocuSign Envelope ID: 5C03745C-4B01-4834-A65D-B77F558A4F46

North Carolina Department of Transportation
Traffic Engineering Accident Analysis System
Strip Analysis Report

Acc No	Crash ID	Milepost	Date	Accident Type	Total Damage	Injuries F	A	B	C	Condition R	L	W	Road Ch	Ci	Trfc Ctl Dv	Op
521	**105604690**	22.010	09/13/2018 11:08	FIXED OBJECT	$ 5000	0	0	0	0	1	1	1	3	0	0	
Unit	**1 :** 1	**Alchl/Drgs:** 0	**Speed:** 50 MPH	**Dir:** N	**Veh Mnvr/Ped Actn:** 4								**Obj Strk:** 44			
522	**105608349**	22.010	09/20/2018 07:38	SIDESWIPE, SAME DIRECTION	$ 2000	0	0	0	0	1	1	1	1	0	0	
Unit	**1 :** 2	**Alchl/Drgs:** 0	**Speed:** 75 MPH	**Dir:** N	**Veh Mnvr/Ped Actn:** 4								**Obj Strk:**			
Unit	**2 :** 2	**Alchl/Drgs:** 0	**Speed:** 60 MPH	**Dir:** N	**Veh Mnvr/Ped Actn:** 4								**Obj Strk:**			
523	**105628968**	22.010	10/05/2018 12:22	REAR END, SLOW OR STOP	$ 4500	0	0	0	0	1	1	1	3	0	0	
Unit	**1 :** 1	**Alchl/Drgs:** 0	**Speed:** 50 MPH	**Dir:** N	**Veh Mnvr/Ped Actn:** 4								**Obj Strk:**			
Unit	**2 :** 4	**Alchl/Drgs:** 0	**Speed:** 35 MPH	**Dir:** N	**Veh Mnvr/Ped Actn:** 4								**Obj Strk:**			
524	**104052408**	22.052	05/09/2014 04:30	FIXED OBJECT	$ 3500	0	0	0	0	1	1	1	7	0	0	
Unit	**1 :** 5	**Alchl/Drgs:** 0	**Speed:** 60 MPH	**Dir:** E	**Veh Mnvr/Ped Actn:** 4								**Obj Strk:** 58			
525	**104289384**	22.057	02/07/2015 07:55	FIXED OBJECT	$ 10300	0	0	1	0	1	5	1	5	0	0	
Unit	**1 :** 1	**Alchl/Drgs:** 0	**Speed:** 60 MPH	**Dir:** SE	**Veh Mnvr/Ped Actn:** 4								**Obj Strk:** 41			
526	**104286466**	22.062	02/04/2015 10:22	OTHER COLLISION WITH VEHICLE	$ 1000	0	0	0	0	1	1	1	3	0	0	
Unit	**1 :** 4	**Alchl/Drgs:** 0	**Speed:** 60 MPH	**Dir:** S	**Veh Mnvr/Ped Actn:** 4								**Obj Strk:**			
Unit	**2 :** 1	**Alchl/Drgs:** 0	**Speed:** 60 MPH	**Dir:** S	**Veh Mnvr/Ped Actn:** 4								**Obj Strk:**			
527	**104359835**	22.138	04/09/2015 15:06	REAR END, SLOW OR STOP	$ 3600	0	0	0	0	1	1	2	1	0	0	2
Unit	**1 :** 1	**Alchl/Drgs:** 0	**Speed:** 55 MPH	**Dir:** W	**Veh Mnvr/Ped Actn:** 4								**Obj Strk:**			
Unit	**2 :** 1	**Alchl/Drgs:** 0	**Speed:** 55 MPH	**Dir:** W	**Veh Mnvr/Ped Actn:** 11								**Obj Strk:**			
528	**105094236**	22.138	04/28/2017 14:47	RAN OFF ROAD - RIGHT	$ 1000	0	0	0	0	1	1	1	1	0		2
Unit	**1 :** 2	**Alchl/Drgs:** 0	**Speed:** 55 MPH	**Dir:** W	**Veh Mnvr/Ped Actn:** 4								**Obj Strk:**			
529	**104529318**	22.157	10/17/2015 14:55	REAR END, SLOW OR STOP	$ 5000	0	0	0	0	1	1	1	1	0	0	
Unit	**1 :** 1	**Alchl/Drgs:** 0	**Speed:** 35 MPH	**Dir:** W	**Veh Mnvr/Ped Actn:** 4								**Obj Strk:**			
Unit	**2 :** 4	**Alchl/Drgs:** 0	**Speed:** 35 MPH	**Dir:** W	**Veh Mnvr/Ped Actn:** 1								**Obj Strk:**			
530	**104522993**	22.157	10/17/2015 14:56	REAR END, SLOW OR STOP	$ 600	0	0	0	0	1	1	1	1	0	0	
Unit	**1 :** 1	**Alchl/Drgs:** 0	**Speed:** 35 MPH	**Dir:** W	**Veh Mnvr/Ped Actn:** 4								**Obj Strk:**			
Unit	**2 :** 1	**Alchl/Drgs:** 0	**Speed:** 35 MPH	**Dir:** W	**Veh Mnvr/Ped Actn:** 1								**Obj Strk:**			

DocuSign Envelope ID: 5C03745C-4B01-4834-A65D-B77F558A4F46

North Carolina Department of Transportation
Traffic Engineering Accident Analysis System
Strip Analysis Report

Acc No	Crash ID	Milepost	Date	Accident Type	Total Damage	Injuries F	A	B	C	Condition R	L	W	Road Ch	Ci	Trfc Ctl Dv	Op
531	**104528549**	22.157	10/20/2015 07:32	REAR END, SLOW OR STOP	$ 9000	0	0	0	1	1	1	1	1	0	0	
Unit	**1 :** 1	**Alchl/Drgs:** 0	**Speed:** 60 MPH	**Dir:** W	**Veh Mnvr/Ped Actn:** 4	**Obj Strk:**										
Unit	**2 :** 4	**Alchl/Drgs:** 0	**Speed:** 60 MPH	**Dir:** W	**Veh Mnvr/Ped Actn:** 1	**Obj Strk:**										
532	**104538054**	22.157	10/20/2015 07:33	REAR END, SLOW OR STOP	$ 12000	0	0	0	0	1	1	1	1	0	0	
Unit	**1 :** 4	**Alchl/Drgs:** 0	**Speed:** 60 MPH	**Dir:** W	**Veh Mnvr/Ped Actn:** 4	**Obj Strk:**										
Unit	**2 :** 4	**Alchl/Drgs:** 0	**Speed:** 60 MPH	**Dir:** W	**Veh Mnvr/Ped Actn:** 1	**Obj Strk:**										
533	**104560733**	22.157	11/20/2015 18:47	REAR END, SLOW OR STOP	$ 1000	0	0	0	0	1	1	1	1	0	0	
Unit	**1 :** 1	**Alchl/Drgs:** 0	**Speed:** 50 MPH	**Dir:** E	**Veh Mnvr/Ped Actn:** 4	**Obj Strk:**										
Unit	**2 :** 1	**Alchl/Drgs:** 0	**Speed:** 50 MPH	**Dir:** E	**Veh Mnvr/Ped Actn:** 1	**Obj Strk:**										
534	**104905846**	22.162	11/07/2016 07:54	REAR END, SLOW OR STOP	$ 2000	0	0	0	0	1	1	1	1	0	0	
Unit	**1 :** 2	**Alchl/Drgs:** 0	**Speed:** 60 MPH	**Dir:** E	**Veh Mnvr/Ped Actn:** 4	**Obj Strk:**										
Unit	**2 :** 4	**Alchl/Drgs:** 0	**Speed:** 60 MPH	**Dir:** E	**Veh Mnvr/Ped Actn:** 11	**Obj Strk:**										
535	**105416867**	22.162	03/15/2018 15:08	REAR END, SLOW OR STOP	$ 4000	0	0	0	0	1	1	1	1	0	0	
Unit	**1 :** 2	**Alchl/Drgs:** 0	**Speed:** 45 MPH	**Dir:** W	**Veh Mnvr/Ped Actn:** 4	**Obj Strk:**										
Unit	**2 :** 2	**Alchl/Drgs:** 0	**Speed:** 0 MPH	**Dir:** W	**Veh Mnvr/Ped Actn:** 1	**Obj Strk:**										
536	**105414527**	22.162	03/16/2018 13:33	REAR END, SLOW OR STOP	$ 4500	0	0	0	0	1	1	1	1	0	0	
Unit	**1 :** 10	**Alchl/Drgs:** 0	**Speed:** 45 MPH	**Dir:** W	**Veh Mnvr/Ped Actn:** 4	**Obj Strk:**										
Unit	**2 :** 1	**Alchl/Drgs:** 0	**Speed:** 10 MPH	**Dir:** W	**Veh Mnvr/Ped Actn:** 11	**Obj Strk:**										
Unit	**3 :** 4	**Alchl/Drgs:** 0	**Speed:** 0 MPH	**Dir:** W	**Veh Mnvr/Ped Actn:** 1	**Obj Strk:**										
537	**105560066**	22.162	07/30/2018 19:39	REAR END, SLOW OR STOP	$ 19500	0	0	0	1	1	1	1	1	0	0	
Unit	**1 :** 10	**Alchl/Drgs:** 0	**Speed:** 60 MPH	**Dir:** W	**Veh Mnvr/Ped Actn:** 4	**Obj Strk:**										
Unit	**2 :** 1	**Alchl/Drgs:** 0	**Speed:** 5 MPH	**Dir:** W	**Veh Mnvr/Ped Actn:** 11	**Obj Strk:** 44										
538	**105626974**	22.162	10/03/2018 18:55	SIDESWIPE, SAME DIRECTION	$ 14000	0	0	0	0	1	2	1	1	0	0	
Unit	**1 :** 1	**Alchl/Drgs:** 0	**Speed:** 45 MPH	**Dir:** W	**Veh Mnvr/Ped Actn:** 5	**Obj Strk:** 44										
Unit	**2 :** 2	**Alchl/Drgs:** 0	**Speed:** 45 MPH	**Dir:** W	**Veh Mnvr/Ped Actn:** 4	**Obj Strk:** 44										
539	**104404025**	22.163	06/05/2015 16:41	FIXED OBJECT	$ 23000	0	0	0	2	1	1	1	3	0	0	
Unit	**1 :** 11	**Alchl/Drgs:** 0	**Speed:** 30 MPH	**Dir:** W	**Veh Mnvr/Ped Actn:** 4	**Obj Strk:** 44										
Unit	**2 :** 14	**Alchl/Drgs:** 0	**Speed:** 0 MPH	**Dir:** W	**Veh Mnvr/Ped Actn:** 1	**Obj Strk:**										

DocuSign Envelope ID: 5C03745C-4B01-4834-A65D-B77F558A4F46

North Carolina Department of Transportation
Traffic Engineering Accident Analysis System
Strip Analysis Report

Acc No	Crash ID	Milepost	Date	Accident Type	Total Damage	Injuries F	A	B	C	Condition R	L	W	Road Ch	Ci	Trfc Ctl Dv	Op
540	**104767726**	22.180	06/17/2016 17:55	REAR END, SLOW OR STOP	$ 3800	0	0	0	0	1	1	1	3	0	0	
Unit	**1 :** 1	**Alchl/Drgs:** 0	**Speed:** 45 MPH	**Dir:** E	**Veh Mnvr/Ped Actn:** 4	**Obj Strk:**										
Unit	**2 :** 2	**Alchl/Drgs:** 0	**Speed:** 45 MPH	**Dir:** E	**Veh Mnvr/Ped Actn:** 1	**Obj Strk:**										
Unit	**3 :** 1	**Alchl/Drgs:** 0	**Speed:** 45 MPH	**Dir:** E	**Veh Mnvr/Ped Actn:** 1	**Obj Strk:**										
541	**103955477**	22.210	01/18/2014 06:19	RAN OFF ROAD - LEFT	$ 1000	0	0	0	1	1	5	1	1	0	0	
Unit	**1 :** 14	**Alchl/Drgs:** 0	**Speed:** 50 MPH	**Dir:** E	**Veh Mnvr/Ped Actn:** 4	**Obj Strk:** 44										
542	**105307560**	22.210	11/29/2017 17:36	REAR END, SLOW OR STOP	$ 2400	0	0	0	0	1	1	1	3	0	0	
Unit	**1 :** 1	**Alchl/Drgs:** 0	**Speed:** 30 MPH	**Dir:** W	**Veh Mnvr/Ped Actn:** 11	**Obj Strk:**										
Unit	**2 :** 4	**Alchl/Drgs:** 0	**Speed:** 30 MPH	**Dir:** W	**Veh Mnvr/Ped Actn:** 11	**Obj Strk:**										
543	**105505939**	22.210	06/09/2018 12:38	REAR END, SLOW OR STOP	$ 1200	0	0	0	0	1	1	1	1	0	0	
Unit	**1 :** 2	**Alchl/Drgs:** 0	**Speed:** 50 MPH	**Dir:** W	**Veh Mnvr/Ped Actn:** 4	**Obj Strk:**										
Unit	**2 :** 2	**Alchl/Drgs:** 0	**Speed:** 50 MPH	**Dir:** W	**Veh Mnvr/Ped Actn:** 1	**Obj Strk:**										
544	**104219764**	22.219	11/19/2014 08:04	REAR END, SLOW OR STOP	$ 4000	0	0	0	0	1	1	1	1	0	0	
Unit	**1 :** 1	**Alchl/Drgs:** 0	**Speed:** 60 MPH	**Dir:** N	**Veh Mnvr/Ped Actn:** 4	**Obj Strk:**										
Unit	**2 :** 2	**Alchl/Drgs:** 0	**Speed:** 55 MPH	**Dir:** N	**Veh Mnvr/Ped Actn:** 1	**Obj Strk:**										
545	**104720197**	22.255	05/02/2016 17:30	REAR END, SLOW OR STOP	$ 10500	0	0	0	0	1	1	1	3	0	0	
Unit	**1 :** 5	**Alchl/Drgs:** 0	**Speed:** 50 MPH	**Dir:** E	**Veh Mnvr/Ped Actn:** 11	**Obj Strk:**										
Unit	**2 :** 4	**Alchl/Drgs:** 0	**Speed:** 55 MPH	**Dir:** E	**Veh Mnvr/Ped Actn:** 4	**Obj Strk:**										
546	**104199678**	22.257	10/31/2014 18:00	REAR END, SLOW OR STOP	$ 6800	0	0	0	0	2	1	2	1	0	0	
Unit	**1 :** 1	**Alchl/Drgs:** 0	**Speed:** 50 MPH	**Dir:** W	**Veh Mnvr/Ped Actn:** 4	**Obj Strk:**										
Unit	**2 :** 4	**Alchl/Drgs:** 0	**Speed:** 50 MPH	**Dir:** W	**Veh Mnvr/Ped Actn:** 11	**Obj Strk:**										
547	**104412279**	22.257	06/19/2015 14:54	REAR END, SLOW OR STOP	$ 5000	0	0	0	1	1	1	1	3	0	0	
Unit	**1 :** 1	**Alchl/Drgs:** 0	**Speed:** 55 MPH	**Dir:** W	**Veh Mnvr/Ped Actn:** 11	**Obj Strk:**										
Unit	**2 :** 1	**Alchl/Drgs:** 0	**Speed:** 55 MPH	**Dir:** W	**Veh Mnvr/Ped Actn:** 1	**Obj Strk:**										
Unit	**3 :** 1	**Alchl/Drgs:** 0	**Speed:** 55 MPH	**Dir:** W	**Veh Mnvr/Ped Actn:** 1	**Obj Strk:**										
548	**104097432**	22.262	06/26/2014 16:27	REAR END, SLOW OR STOP	$ 18000	0	0	0	2	1	1	2	5	0	0	
Unit	**1 :** 3	**Alchl/Drgs:** 0	**Speed:** 60 MPH	**Dir:** W	**Veh Mnvr/Ped Actn:** 4	**Obj Strk:** 59										
Unit	**2 :** 1	**Alchl/Drgs:** 0	**Speed:** 60 MPH	**Dir:** W	**Veh Mnvr/Ped Actn:** 11	**Obj Strk:** 44										
Unit	**3 :** 1	**Alchl/Drgs:** 0	**Speed:** 60 MPH	**Dir:** W	**Veh Mnvr/Ped Actn:** 11	**Obj Strk:** 44										

DocuSign Envelope ID: 5C03745C-4B01-4834-A65D-B77F558A4F46

North Carolina Department of Transportation
Traffic Engineering Accident Analysis System
Strip Analysis Report

Acc No	Crash ID	Milepost	Date	Accident Type	Total Damage	Injuries F	A	B	C	Condition R	L	W	Road Ch	Ci	Trfc Ctl Dv	Op
549	**104174671**	22.262	10/07/2014 08:21	FIXED OBJECT	$ 4500	0	0	0	0	2	1	2	1	0	0	
Unit	**1 :** 1	**Alchl/Drgs:** 0	**Speed:** 65 MPH	**Dir:** N	**Veh Mnvr/Ped Actn:** 4	**Obj Strk:** 42										
Unit	**2 :** 1	**Alchl/Drgs:** 0	**Speed:** 60 MPH	**Dir:** N	**Veh Mnvr/Ped Actn:** 4	**Obj Strk:**										
550	**104359022**	22.262	04/22/2015 16:44	REAR END, SLOW OR STOP	$ 2000	0	0	0	0	1	1	1	1	0	0	
Unit	**1 :** 1	**Alchl/Drgs:** 0	**Speed:** 15 MPH	**Dir:** E	**Veh Mnvr/Ped Actn:** 4	**Obj Strk:**										
Unit	**2 :** 2	**Alchl/Drgs:** 0	**Speed:** 15 MPH	**Dir:** E	**Veh Mnvr/Ped Actn:** 4	**Obj Strk:**										
551	**104494345**	22.262	09/19/2015 20:43	SIDESWIPE, SAME DIRECTION	$ 2000	0	0	0	0	1	5	1	3	0	0	
Unit	**1 :** 1	**Alchl/Drgs:** 0	**Speed:** 55 MPH	**Dir:** N	**Veh Mnvr/Ped Actn:** 5	**Obj Strk:**										
Unit	**2 :** 4	**Alchl/Drgs:** 0	**Speed:** 60 MPH	**Dir:** N	**Veh Mnvr/Ped Actn:** 4	**Obj Strk:**										
552	**104558579**	22.262	11/18/2015 17:26	FIXED OBJECT	$ 500	0	0	0	0	2	2	3	3	0	0	
Unit	**1 :** 5	**Alchl/Drgs:** 1	**Speed:** 60 MPH	**Dir:** E	**Veh Mnvr/Ped Actn:** 4	**Obj Strk:** 58										
553	**104739035**	22.262	05/18/2016 05:37	FIXED OBJECT	$ 3400	0	0	0	0	1	5	2	7	0	0	
Unit	**1 :** 4	**Alchl/Drgs:** 0	**Speed:** 60 MPH	**Dir:** E	**Veh Mnvr/Ped Actn:** 4	**Obj Strk:** 44										
554	**104785924**	22.262	07/08/2016 16:24	REAR END, SLOW OR STOP	$ 4000	0	0	0	0	1	1	1	1	0	0	
Unit	**1 :** 1	**Alchl/Drgs:** 0	**Speed:** 40 MPH	**Dir:** W	**Veh Mnvr/Ped Actn:** 4	**Obj Strk:**										
Unit	**2 :** 4	**Alchl/Drgs:** 0	**Speed:** 35 MPH	**Dir:** W	**Veh Mnvr/Ped Actn:** 11	**Obj Strk:**										
555	**104805397**	22.262	07/30/2016 00:59	FIXED OBJECT	$ 1500	0	0	0	0	1	5	1	1	0	0	
Unit	**1 :** 1	**Alchl/Drgs:** 7	**Speed:** 70 MPH	**Dir:** E	**Veh Mnvr/Ped Actn:** 4	**Obj Strk:** 44										
556	**104842291**	22.262	09/02/2016 17:36	REAR END, SLOW OR STOP	$ 4000	0	0	0	1	1	1	1	1	0	0	
Unit	**1 :** 1	**Alchl/Drgs:** 0	**Speed:** 35 MPH	**Dir:** E	**Veh Mnvr/Ped Actn:** 4	**Obj Strk:**										
Unit	**2 :** 1	**Alchl/Drgs:** 0	**Speed:** 35 MPH	**Dir:** E	**Veh Mnvr/Ped Actn:** 4	**Obj Strk:**										
557	**105057221**	22.262	03/31/2017 15:37	REAR END, SLOW OR STOP	$ 35000	0	0	0	1	1	1	1	1	0	0	
Unit	**1 :** 2	**Alchl/Drgs:** 0	**Speed:** 60 MPH	**Dir:** W	**Veh Mnvr/Ped Actn:** 11	**Obj Strk:**										
Unit	**2 :** 1	**Alchl/Drgs:** 0	**Speed:** 60 MPH	**Dir:** W	**Veh Mnvr/Ped Actn:** 11	**Obj Strk:**										
Unit	**3 :** 1	**Alchl/Drgs:** 0	**Speed:** 60 MPH	**Dir:** W	**Veh Mnvr/Ped Actn:** 1	**Obj Strk:**										
Unit	**4 :** 4	**Alchl/Drgs:** 0	**Speed:** 60 MPH	**Dir:** W	**Veh Mnvr/Ped Actn:** 1	**Obj Strk:**										

All data presented in this report comes explicitly from the Traffic Engineering Accident Analysis System based upon va criteria provided by the report's creator. The onus is strictly upon the user of this report to exercise due diligence in in and further representing this data.

DocuSign Envelope ID: 5C03745C-4B01-4834-A65D-B77F558A4F46

North Carolina Department of Transportation
Traffic Engineering Accident Analysis System
Strip Analysis Report

Acc No	Crash ID	Milepost	Date	Accident Type	Total Damage	Injuries F	A	B	C	Condition R	L	W	Road Ch	Ci	Trfc Ctl Dv	Op
558	**105181864**	22.262	08/06/2017 13:52	REAR END, SLOW OR STOP	$ 6800	0	0	1	0	1	1	1	1	0	0	
Unit	**1 :** 1	**Alchl/Drgs:** 0	**Speed:** 50 MPH	**Dir:** E	**Veh Mnvr/Ped Actn:** 4	**Obj Strk:**										
Unit	**2 :** 5	**Alchl/Drgs:** 0	**Speed:** 0 MPH	**Dir:** E	**Veh Mnvr/Ped Actn:** 1	**Obj Strk:**										
559	**105266967**	22.262	10/26/2017 17:08	REAR END, SLOW OR STOP	$ 6000	0	0	0	0	1	1	1	1	0	0	
Unit	**1 :** 1	**Alchl/Drgs:** 0	**Speed:** 35 MPH	**Dir:** E	**Veh Mnvr/Ped Actn:** 4	**Obj Strk:**										
Unit	**2 :** 2	**Alchl/Drgs:** 0	**Speed:** 30 MPH	**Dir:** E	**Veh Mnvr/Ped Actn:** 11	**Obj Strk:**										
560	**105276872**	22.262	11/03/2017 17:59	REAR END, SLOW OR STOP	$ 6000	0	0	0	1	1	1	1	1	0	0	
Unit	**1 :** 1	**Alchl/Drgs:** 0	**Speed:** 55 MPH	**Dir:** E	**Veh Mnvr/Ped Actn:** 4	**Obj Strk:**										
Unit	**2 :** 1	**Alchl/Drgs:** 0	**Speed:** 45 MPH	**Dir:** E	**Veh Mnvr/Ped Actn:** 4	**Obj Strk:**										
561	**105300413**	22.262	11/26/2017 14:00	REAR END, SLOW OR STOP	$ 5500	0	0	0	1	1	1	1	1	0	0	
Unit	**1 :** 1	**Alchl/Drgs:** 0	**Speed:** 55 MPH	**Dir:** E	**Veh Mnvr/Ped Actn:** 4	**Obj Strk:**										
Unit	**2 :** 1	**Alchl/Drgs:** 0	**Speed:** 0 MPH	**Dir:** E	**Veh Mnvr/Ped Actn:** 1	**Obj Strk:**										
562	**105528032**	22.262	06/28/2018 07:39	SIDESWIPE, SAME DIRECTION	$ 1700	0	0	0	0	2	1	2	1	0	0	
Unit	**1 :** 4	**Alchl/Drgs:** 0	**Speed:** 55 MPH	**Dir:** S	**Veh Mnvr/Ped Actn:** 5	**Obj Strk:**										
Unit	**2 :** 4	**Alchl/Drgs:** 0	**Speed:** 60 MPH	**Dir:** S	**Veh Mnvr/Ped Actn:** 4	**Obj Strk:**										
563	**105542861**	22.262	07/16/2018 14:30	REAR END, SLOW OR STOP	$ 10000	0	0	0	0	1	1	2	1	0	0	
Unit	**1 :** 5	**Alchl/Drgs:** 0	**Speed:** 35 MPH	**Dir:** W	**Veh Mnvr/Ped Actn:** 4	**Obj Strk:**										
Unit	**2 :** 4	**Alchl/Drgs:** 0	**Speed:** 0 MPH	**Dir:** W	**Veh Mnvr/Ped Actn:** 1	**Obj Strk:**										
564	**105635764**	22.262	10/13/2018 11:37	REAR END, SLOW OR STOP	$ 8000	0	0	0	0	1	1	1	1	0	0	
Unit	**1 :** 4	**Alchl/Drgs:** 0	**Speed:** 55 MPH	**Dir:** N	**Veh Mnvr/Ped Actn:** 4	**Obj Strk:**										
Unit	**2 :** 4	**Alchl/Drgs:** 0	**Speed:** 0 MPH	**Dir:** N	**Veh Mnvr/Ped Actn:** 1	**Obj Strk:**										
565	**105635763**	22.262	10/13/2018 11:38	REAR END, SLOW OR STOP	$ 9000	0	0	0	0	1	1	1	1	0	0	
Unit	**1 :** 1	**Alchl/Drgs:** 0	**Speed:** 55 MPH	**Dir:** N	**Veh Mnvr/Ped Actn:** 4	**Obj Strk:**										
Unit	**2 :** 4	**Alchl/Drgs:** 0	**Speed:** 0 MPH	**Dir:** N	**Veh Mnvr/Ped Actn:** 1	**Obj Strk:**										
566	**103971471**	22.263	02/03/2014 06:08	FIXED OBJECT	$ 3000	0	0	1	0	2	5	3	1	0	0	
Unit	**1 :** 2	**Alchl/Drgs:** 0	**Speed:** 60 MPH	**Dir:** W	**Veh Mnvr/Ped Actn:** 4	**Obj Strk:** 42										

All data presented in this report comes explicitly from the Traffic Engineering Accident Analysis System based upon va criteria provided by the report's creator. The onus is strictly upon the user of this report to exercise due diligence in in and further representing this data.

DocuSign Envelope ID: 5C03745C-4B01-4834-A65D-B77F558A4F46

North Carolina Department of Transportation
Traffic Engineering Accident Analysis System
Strip Analysis Report

Acc No	Crash ID	Milepost	Date	Accident Type	Total Damage	Injuries F	A	B	C	Condition R	L	W	Road Ch	Ci	Trfc Ctl Dv	Op
567	**104139069**	22.263	08/28/2014 17:46	REAR END, SLOW OR STOP	$ 13500	0	0	0	0	1	1	1	3	0	0	
Unit	**1 :** 2	**Alchl/Drgs:**	0	**Speed:** 50 MPH	**Dir:** E	**Veh Mnvr/Ped Actn:**				1			**Obj Strk:**			
Unit	**2 :** 4	**Alchl/Drgs:**	0	**Speed:** 50 MPH	**Dir:** E	**Veh Mnvr/Ped Actn:**				1			**Obj Strk:**			
Unit	**3 :** 2	**Alchl/Drgs:**	0	**Speed:** 50 MPH	**Dir:** E	**Veh Mnvr/Ped Actn:**				4			**Obj Strk:**			
568	**104163986**	22.263	09/24/2014 08:02	REAR END, SLOW OR STOP	$ 2500	0	0	0	1	1	1	1	1	0	0	
Unit	**1 :** 10	**Alchl/Drgs:**	0	**Speed:** 60 MPH	**Dir:** N	**Veh Mnvr/Ped Actn:**				4			**Obj Strk:**			
Unit	**2 :** 2	**Alchl/Drgs:**	0	**Speed:** 60 MPH	**Dir:** N	**Veh Mnvr/Ped Actn:**				11			**Obj Strk:**			
569	**104392423**	22.263	05/17/2015 12:00	REAR END, SLOW OR STOP	$ 3000	0	0	0	0	1	1	1	3	0		3
Unit	**1 :** 1	**Alchl/Drgs:**	0	**Speed:** 45 MPH	**Dir:** N	**Veh Mnvr/Ped Actn:**				4			**Obj Strk:**			
Unit	**2 :** 1	**Alchl/Drgs:**	0	**Speed:** 45 MPH	**Dir:** N	**Veh Mnvr/Ped Actn:**				11			**Obj Strk:**			
Unit	**3 :** 1	**Alchl/Drgs:**	0	**Speed:** 45 MPH	**Dir:** N	**Veh Mnvr/Ped Actn:**				11			**Obj Strk:**			
570	**104384768**	22.263	05/20/2015 18:06	REAR END, SLOW OR STOP	$ 15000	0	0	0	0	1	1	1	1	0	0	
Unit	**1 :** 5	**Alchl/Drgs:**	0	**Speed:** 35 MPH	**Dir:** W	**Veh Mnvr/Ped Actn:**				4			**Obj Strk:**			
Unit	**2 :** 2	**Alchl/Drgs:**	0	**Speed:** 35 MPH	**Dir:** W	**Veh Mnvr/Ped Actn:**				1			**Obj Strk:**			
Unit	**3 :** 2	**Alchl/Drgs:**	0	**Speed:** 35 MPH	**Dir:** W	**Veh Mnvr/Ped Actn:**				1			**Obj Strk:**			
Unit	**4 :** 1	**Alchl/Drgs:**	7	**Speed:** 35 MPH	**Dir:** W	**Veh Mnvr/Ped Actn:**				1			**Obj Strk:**			
571	**104458908**	22.263	08/05/2015 19:02	RAN OFF ROAD - RIGHT	$ 5000	0	0	0	2	1	1	2	8	0	0	
Unit	**1 :** 1	**Alchl/Drgs:**	0	**Speed:** 60 MPH	**Dir:** N	**Veh Mnvr/Ped Actn:**				4			**Obj Strk:**			
Unit	**2 :** 4	**Alchl/Drgs:**	1	**Speed:** 75 MPH	**Dir:** N	**Veh Mnvr/Ped Actn:**				4			**Obj Strk:**			
572	**104603437**	22.263	12/26/2015 12:57	REAR END, SLOW OR STOP	$ 5500	0	0	0	0	1	1	1	1	0	0	
Unit	**1 :** 1	**Alchl/Drgs:**	0	**Speed:** 30 MPH	**Dir:** N	**Veh Mnvr/Ped Actn:**				4			**Obj Strk:**			
Unit	**2 :** 4	**Alchl/Drgs:**	0	**Speed:** 20 MPH	**Dir:** N	**Veh Mnvr/Ped Actn:**				11			**Obj Strk:**			
Unit	**3 :** 32	**Alchl/Drgs:**	7	**Speed:** 0 MPH	**Dir:** N	**Veh Mnvr/Ped Actn:**				1			**Obj Strk:**			
573	**104811043**	22.263	08/05/2016 13:22	REAR END, SLOW OR STOP	$ 1150	0	0	0	0	1	1	2	1	0	0	
Unit	**1 :** 1	**Alchl/Drgs:**	0	**Speed:** 35 MPH	**Dir:** W	**Veh Mnvr/Ped Actn:**				4			**Obj Strk:**			
Unit	**2 :** 4	**Alchl/Drgs:**	0	**Speed:** 35 MPH	**Dir:** W	**Veh Mnvr/Ped Actn:**				11			**Obj Strk:**			
574	**104866450**	22.263	10/01/2016 12:19	REAR END, SLOW OR STOP	$ 9000	0	0	0	2	1	1	1	1	0	0	
Unit	**1 :** 4	**Alchl/Drgs:**	0	**Speed:** 20 MPH	**Dir:** W	**Veh Mnvr/Ped Actn:**				4			**Obj Strk:**			
Unit	**2 :** 4	**Alchl/Drgs:**	0	**Speed:** 0 MPH	**Dir:** W	**Veh Mnvr/Ped Actn:**				1			**Obj Strk:**			
Unit	**3 :** 5	**Alchl/Drgs:**	0	**Speed:** 0 MPH	**Dir:** W	**Veh Mnvr/Ped Actn:**				1			**Obj Strk:**			

DocuSign Envelope ID: 5C03745C-4B01-4834-A65D-B77F558A4F46

North Carolina Department of Transportation
Traffic Engineering Accident Analysis System
Strip Analysis Report

Acc No	Crash ID	Milepost	Date	Accident Type	Total Damage	Injuries F	A	B	C	Condition R	L	W	Road Ch	Ci	Trfc Ctl Dv	Op
575	**104915061**	22.263	11/14/2016 17:51	REAR END, SLOW OR STOP	$ 1000	0	0	0	0	1	5	1	3	0	0	
Unit	**1 :** 1	**Alchl/Drgs:** 0	**Speed:** 60 MPH	**Dir:** N	**Veh Mnvr/Ped Actn:** 4	**Obj Strk:**										
Unit	**2 :** 1	**Alchl/Drgs:** 0	**Speed:** 60 MPH	**Dir:** N	**Veh Mnvr/Ped Actn:** 11	**Obj Strk:**										
576	**104951543**	22.263	12/16/2016 15:49	REAR END, SLOW OR STOP	$ 1300	0	0	0	0	1	1	2	1	0	0	
Unit	**1 :** 4	**Alchl/Drgs:** 0	**Speed:** 50 MPH	**Dir:** N	**Veh Mnvr/Ped Actn:** 4	**Obj Strk:**										
Unit	**2 :** 4	**Alchl/Drgs:** 0	**Speed:** 20 MPH	**Dir:** N	**Veh Mnvr/Ped Actn:** 1	**Obj Strk:**										
577	**105264094**	22.263	10/22/2017 15:14	REAR END, SLOW OR STOP	$ 2000	0	0	0	0	1	1	1	3	0	0	
Unit	**1 :** 1	**Alchl/Drgs:** 0	**Speed:** 40 MPH	**Dir:** W	**Veh Mnvr/Ped Actn:** 4	**Obj Strk:**										
Unit	**2 :** 4	**Alchl/Drgs:** 0	**Speed:** 40 MPH	**Dir:** W	**Veh Mnvr/Ped Actn:** 11	**Obj Strk:**										
578	**105300312**	22.263	11/26/2017 10:41	REAR END, SLOW OR STOP	$ 7500	0	0	0	0	1	1	1	1	0	0	
Unit	**1 :** 4	**Alchl/Drgs:** 0	**Speed:** 60 MPH	**Dir:** W	**Veh Mnvr/Ped Actn:** 4	**Obj Strk:**										
Unit	**2 :** 1	**Alchl/Drgs:** 0	**Speed:** 0 MPH	**Dir:** W	**Veh Mnvr/Ped Actn:** 1	**Obj Strk:**										
579	**105332144**	22.263	12/22/2017 15:56	REAR END, SLOW OR STOP	$ 1700	0	0	0	0	1	1	1	1	0	0	
Unit	**1 :** 1	**Alchl/Drgs:** 0	**Speed:** 45 MPH	**Dir:** W	**Veh Mnvr/Ped Actn:** 4	**Obj Strk:**										
Unit	**2 :** 1	**Alchl/Drgs:** 0	**Speed:** 0 MPH	**Dir:** W	**Veh Mnvr/Ped Actn:** 1	**Obj Strk:**										
580	**105332233**	22.263	12/23/2017 14:15	SIDESWIPE, SAME DIRECTION	$ 4000	0	0	0	0	2	1	3	1	0	0	
Unit	**1 :** 14	**Alchl/Drgs:** 7	**Speed:** 45 MPH	**Dir:** W	**Veh Mnvr/Ped Actn:** 4	**Obj Strk:**										
Unit	**2 :** 1	**Alchl/Drgs:** 7	**Speed:** 0 MPH	**Dir:** W	**Veh Mnvr/Ped Actn:** 1	**Obj Strk:**										
581	**105627274**	22.263	10/04/2018 07:47	REAR END, SLOW OR STOP	$ 1500	0	0	0	0	1	1	1	1	0	0	
Unit	**1 :** 4	**Alchl/Drgs:** 0	**Speed:** 20 MPH	**Dir:** N	**Veh Mnvr/Ped Actn:** 4	**Obj Strk:**										
Unit	**2 :** 5	**Alchl/Drgs:** 0	**Speed:** 10 MPH	**Dir:** N	**Veh Mnvr/Ped Actn:** 11	**Obj Strk:**										
582	**105628909**	22.263	10/06/2018 09:51	REAR END, SLOW OR STOP	$ 5000	0	0	0	0	1	1	1	1	0	0	
Unit	**1 :** 2	**Alchl/Drgs:** 0	**Speed:** 55 MPH	**Dir:** N	**Veh Mnvr/Ped Actn:** 4	**Obj Strk:**										
Unit	**2 :** 4	**Alchl/Drgs:** 0	**Speed:** 50 MPH	**Dir:** N	**Veh Mnvr/Ped Actn:** 11	**Obj Strk:**										
583	**105652754**	22.263	10/28/2018 16:48	REAR END, SLOW OR STOP	$ 4500	0	0	0	3	1	1	1	1	0	0	
Unit	**1 :** 1	**Alchl/Drgs:** 0	**Speed:** 40 MPH	**Dir:** N	**Veh Mnvr/Ped Actn:** 4	**Obj Strk:**										
Unit	**2 :** 4	**Alchl/Drgs:** 0	**Speed:** 35 MPH	**Dir:** N	**Veh Mnvr/Ped Actn:** 11	**Obj Strk:**										

DocuSign Envelope ID: 5C03745C-4B01-4834-A65D-B77F558A4F46

North Carolina Department of Transportation
Traffic Engineering Accident Analysis System
Strip Analysis Report

Acc No	Crash ID	Milepost	Date	Accident Type	Total Damage	Injuries F	A	B	C	Condition R	L	W	Road Ch	Ci	Trfc Ctl Dv	Op
584	**104258209**	22.310	12/30/2014 16:36	REAR END, SLOW OR STOP	$ 1400	0	0	0	0	1	1	2	1	0	0	
Unit 1 : 14	**Alchl/Drgs:** 0	**Speed:** 50 MPH	**Dir:** W	**Veh Mnvr/Ped Actn:** 4	**Obj Strk:**											
Unit 2 : 2	**Alchl/Drgs:** 0	**Speed:** 0 MPH	**Dir:** W	**Veh Mnvr/Ped Actn:** 1	**Obj Strk:**											
585	**105153253**	22.310	07/06/2017 17:23	REAR END, SLOW OR STOP	$ 3000	0	0	0	0	1	1	2	3	0	0	
Unit 1 : 4	**Alchl/Drgs:** 0	**Speed:** 55 MPH	**Dir:** E	**Veh Mnvr/Ped Actn:** 4	**Obj Strk:**											
Unit 2 : 1	**Alchl/Drgs:** 0	**Speed:** 55 MPH	**Dir:** E	**Veh Mnvr/Ped Actn:** 11	**Obj Strk:**											
586	**104633574**	22.320	02/02/2016 18:11	REAR END, SLOW OR STOP	$ 3500	0	0	0	0	2	5	2	3	0	0	
Unit 1 : 4	**Alchl/Drgs:** 0	**Speed:** 60 MPH	**Dir:** W	**Veh Mnvr/Ped Actn:** 4	**Obj Strk:**											
Unit 2 : 4	**Alchl/Drgs:** 0	**Speed:** 60 MPH	**Dir:** W	**Veh Mnvr/Ped Actn:** 1	**Obj Strk:**											
Unit 3 : 1	**Alchl/Drgs:** 0	**Speed:** 60 MPH	**Dir:** W	**Veh Mnvr/Ped Actn:** 1	**Obj Strk:**											
587	**104327178**	22.357	03/20/2015 08:47	REAR END, SLOW OR STOP	$ 10500	0	0	0	5	1	1	2	1	0	0	
Unit 1 : 1	**Alchl/Drgs:** 0	**Speed:** 60 MPH	**Dir:** SE	**Veh Mnvr/Ped Actn:** 4	**Obj Strk:**											
Unit 2 : 4	**Alchl/Drgs:** 0	**Speed:** 15 MPH	**Dir:** SE	**Veh Mnvr/Ped Actn:** 11	**Obj Strk:**											
Unit 3 : 5	**Alchl/Drgs:** 0	**Speed:** 5 MPH	**Dir:** SE	**Veh Mnvr/Ped Actn:** 11	**Obj Strk:**											
588	**104679788**	22.357	03/20/2016 15:45	REAR END, SLOW OR STOP	$ 5000	0	0	0	1	2	1	3	1	0	0	
Unit 1 : 1	**Alchl/Drgs:** 0	**Speed:** 50 MPH	**Dir:** NW	**Veh Mnvr/Ped Actn:** 4	**Obj Strk:**											
Unit 2 : 4	**Alchl/Drgs:** 0	**Speed:** 40 MPH	**Dir:** NW	**Veh Mnvr/Ped Actn:** 11	**Obj Strk:**											
589	**104904078**	22.357	11/03/2016 17:24	REAR END, SLOW OR STOP	$ 9000	0	0	0	0	1	1	1	1	0	0	
Unit 1 : 4	**Alchl/Drgs:** 0	**Speed:** 40 MPH	**Dir:** W	**Veh Mnvr/Ped Actn:** 1	**Obj Strk:**											
Unit 2 : 1	**Alchl/Drgs:** 0	**Speed:** 40 MPH	**Dir:** W	**Veh Mnvr/Ped Actn:** 4	**Obj Strk:**											
590	**105062910**	22.362	04/06/2017 18:14	REAR END, SLOW OR STOP	$ 12000	0	0	0	0	2	1	3	1	0	0	
Unit 1 : 1	**Alchl/Drgs:** 0	**Speed:** 30 MPH	**Dir:** W	**Veh Mnvr/Ped Actn:** 4	**Obj Strk:**											
Unit 2 : 1	**Alchl/Drgs:** 0	**Speed:** 30 MPH	**Dir:** W	**Veh Mnvr/Ped Actn:** 11	**Obj Strk:** 42											
591	**105541260**	22.362	07/13/2018 13:51	REAR END, SLOW OR STOP	$ 2500	0	0	0	0	1	1	1	1	0	0	
Unit 1 : 1	**Alchl/Drgs:** 0	**Speed:** 20 MPH	**Dir:** W	**Veh Mnvr/Ped Actn:** 4	**Obj Strk:**											
Unit 2 : 2	**Alchl/Drgs:** 0	**Speed:** 5 MPH	**Dir:** W	**Veh Mnvr/Ped Actn:** 11	**Obj Strk:**											
592	**104225196**	22.363	11/23/2014 19:46	FIXED OBJECT	$ 3000	0	0	0	0	2	5	2	1	0	0	
Unit 1 : 4	**Alchl/Drgs:** 0	**Speed:** 55 MPH	**Dir:** W	**Veh Mnvr/Ped Actn:** 4	**Obj Strk:** 42											

DocuSign Envelope ID: 5C03745C-4B01-4834-A65D-B77F558A4F46

North Carolina Department of Transportation
Traffic Engineering Accident Analysis System
Strip Analysis Report

Acc No	Crash ID	Milepost	Date	Accident Type	Total Damage	Injuries F	A	B	C	Condition R	L	W	Road Ch	Ci	Trfc Ctl Dv	Op
593	**104224058**	22.363	11/25/2014 08:04	REAR END, SLOW OR STOP	$ 900	0	0	0	0	1	1	2	1	0	0	
Unit	**1 :** 4	**Alchl/Drgs:**	0	**Speed:** 20 MPH	**Dir:** N	**Veh Mnvr/Ped Actn:**			1		**Obj Strk:**					
Unit	**2 :** 4	**Alchl/Drgs:**	0	**Speed:** 20 MPH	**Dir:** N	**Veh Mnvr/Ped Actn:**			1		**Obj Strk:**					
Unit	**3 :** 4	**Alchl/Drgs:**	0	**Speed:** 20 MPH	**Dir:** N	**Veh Mnvr/Ped Actn:**			4		**Obj Strk:**					
594	**104224062**	22.363	11/25/2014 08:04	REAR END, SLOW OR STOP	$ 6300	0	0	0	1	1	1	2	1	0	0	
Unit	**1 :** 1	**Alchl/Drgs:**	0	**Speed:** 20 MPH	**Dir:** N	**Veh Mnvr/Ped Actn:**			1		**Obj Strk:**					
Unit	**2 :** 4	**Alchl/Drgs:**	0	**Speed:** 20 MPH	**Dir:** N	**Veh Mnvr/Ped Actn:**			1		**Obj Strk:**					
Unit	**3 :** 14	**Alchl/Drgs:**	0	**Speed:** 20 MPH	**Dir:** N	**Veh Mnvr/Ped Actn:**			4		**Obj Strk:**					
595	**104406628**	22.363	06/14/2015 16:48	REAR END, SLOW OR STOP	$ 450	0	0	0	0	2	1	2	3	0	0	
Unit	**1 :** 4	**Alchl/Drgs:**	0	**Speed:** 20 MPH	**Dir:** W	**Veh Mnvr/Ped Actn:**			11		**Obj Strk:**					
Unit	**2 :** 1	**Alchl/Drgs:**	0	**Speed:** 20 MPH	**Dir:** W	**Veh Mnvr/Ped Actn:**			4		**Obj Strk:**					
596	**104428885**	22.363	07/09/2015 15:23	REAR END, SLOW OR STOP	$ 12000	0	0	0	0	1	1	1	1	0	0	
Unit	**1 :** 1	**Alchl/Drgs:**	0	**Speed:** 10 MPH	**Dir:** N	**Veh Mnvr/Ped Actn:**			1		**Obj Strk:**					
Unit	**2 :** 4	**Alchl/Drgs:**	0	**Speed:** 10 MPH	**Dir:** N	**Veh Mnvr/Ped Actn:**			1		**Obj Strk:**					
Unit	**3 :** 3	**Alchl/Drgs:**	0	**Speed:** 30 MPH	**Dir:** N	**Veh Mnvr/Ped Actn:**			4		**Obj Strk:**					
597	**105278259**	22.363	10/27/2017 16:00	REAR END, SLOW OR STOP	$ 4000	0	0	0	0	1	1	1	1	0	0	
Unit	**1 :** 1	**Alchl/Drgs:**	7	**Speed:** 15 MPH	**Dir:** W	**Veh Mnvr/Ped Actn:**			4		**Obj Strk:**					
Unit	**2 :** 1	**Alchl/Drgs:**	0	**Speed:** 15 MPH	**Dir:** W	**Veh Mnvr/Ped Actn:**			1		**Obj Strk:**					
598	**105646936**	22.363	10/21/2018 12:23	REAR END, SLOW OR STOP	$ 2500	0	0	0	3	1	1	1	1	0	0	
Unit	**1 :** 1	**Alchl/Drgs:**	0	**Speed:** 60 MPH	**Dir:** W	**Veh Mnvr/Ped Actn:**			4		**Obj Strk:**					
Unit	**2 :** 4	**Alchl/Drgs:**	0	**Speed:** 60 MPH	**Dir:** W	**Veh Mnvr/Ped Actn:**			11		**Obj Strk:**					
599	**105646935**	22.363	10/21/2018 12:24	REAR END, SLOW OR STOP	$ 10000	0	0	0	3	1	1	1	1	0	0	
Unit	**1 :** 1	**Alchl/Drgs:**	0	**Speed:** 60 MPH	**Dir:** W	**Veh Mnvr/Ped Actn:**			4		**Obj Strk:**					
Unit	**2 :** 1	**Alchl/Drgs:**	0	**Speed:** 0 MPH	**Dir:** W	**Veh Mnvr/Ped Actn:**			1		**Obj Strk:**					
Unit	**3 :** 4	**Alchl/Drgs:**	0	**Speed:** 0 MPH	**Dir:** W	**Veh Mnvr/Ped Actn:**			1		**Obj Strk:**					
600	**104038402**	22.410	04/21/2014 08:11	REAR END, SLOW OR STOP	$ 12000	0	0	0	0	1	1	1	3	0	0	
Unit	**1 :** 2	**Alchl/Drgs:**	0	**Speed:** 30 MPH	**Dir:** W	**Veh Mnvr/Ped Actn:**			4		**Obj Strk:**					
Unit	**2 :** 2	**Alchl/Drgs:**	0	**Speed:** 30 MPH	**Dir:** W	**Veh Mnvr/Ped Actn:**			11		**Obj Strk:**					

DocuSign Envelope ID: 5C03745C-4B01-4834-A65D-B77F558A4F46

North Carolina Department of Transportation
Traffic Engineering Accident Analysis System
Strip Analysis Report

Acc No	Crash ID	Milepost	Date	Accident Type	Total Damage	Injuries F	A	B	C	Condition R	L	W	Road Ch	Ci	Trfc Ctl Dv	Op
601	**104038788**	22.410	04/21/2014 08:11	REAR END, SLOW OR STOP	$ 5100	0	0	0	1	1	1	1	1	0	0	
Unit	**1 :** 1	**Alchl/Drgs:** 0	**Speed:** 45 MPH	**Dir:** W	**Veh Mnvr/Ped Actn:** 4	**Obj Strk:**										
Unit	**2 :** 1	**Alchl/Drgs:** 0	**Speed:** 45 MPH	**Dir:** W	**Veh Mnvr/Ped Actn:** 11	**Obj Strk:**										
602	**104038787**	22.410	04/21/2014 08:12	REAR END, SLOW OR STOP	$ 9600	0	0	0	2	1	1	1	1	0	0	
Unit	**1 :** 1	**Alchl/Drgs:** 0	**Speed:** 45 MPH	**Dir:** W	**Veh Mnvr/Ped Actn:** 4	**Obj Strk:**										
Unit	**2 :** 1	**Alchl/Drgs:** 0	**Speed:** 0 MPH	**Dir:** W	**Veh Mnvr/Ped Actn:** 1	**Obj Strk:**										
Unit	**3 :** 1	**Alchl/Drgs:** 0	**Speed:** 0 MPH	**Dir:** W	**Veh Mnvr/Ped Actn:** 1	**Obj Strk:**										
603	**104038768**	22.410	04/22/2014 08:09	REAR END, SLOW OR STOP	$ 1125	0	0	0	0	1	1	1	3	0	0	
Unit	**1 :** 1	**Alchl/Drgs:** 0	**Speed:** 40 MPH	**Dir:** E	**Veh Mnvr/Ped Actn:** 11	**Obj Strk:**										
Unit	**2 :** 2	**Alchl/Drgs:** 0	**Speed:** 40 MPH	**Dir:** E	**Veh Mnvr/Ped Actn:** 11	**Obj Strk:**										
604	**104612167**	22.410	01/12/2016 08:23	REAR END, SLOW OR STOP	$ 3000	0	0	0	0	1	1	1	1	0	0	
Unit	**1 :** 1	**Alchl/Drgs:** 0	**Speed:** 60 MPH	**Dir:** W	**Veh Mnvr/Ped Actn:** 4	**Obj Strk:**										
Unit	**2 :** 1	**Alchl/Drgs:** 0	**Speed:** 60 MPH	**Dir:** W	**Veh Mnvr/Ped Actn:** 1	**Obj Strk:**										
605	**104932158**	22.410	11/06/2016 10:51	REAR END, SLOW OR STOP	$ 4000	0	0	0	0	1	1	1	1	0		2
Unit	**1 :** 2	**Alchl/Drgs:** 0	**Speed:** 30 MPH	**Dir:** E	**Veh Mnvr/Ped Actn:** 4	**Obj Strk:**										
Unit	**2 :** 2	**Alchl/Drgs:** 0	**Speed:** 0 MPH	**Dir:** E	**Veh Mnvr/Ped Actn:** 1	**Obj Strk:**										
606	**104910143**	22.410	11/09/2016 17:34	REAR END, SLOW OR STOP	$ 6500	0	0	0	0	1	2	1	3	0	0	
Unit	**1 :** 1	**Alchl/Drgs:** 0	**Speed:** 40 MPH	**Dir:** E	**Veh Mnvr/Ped Actn:** 1	**Obj Strk:**										
Unit	**2 :** 1	**Alchl/Drgs:** 0	**Speed:** 40 MPH	**Dir:** E	**Veh Mnvr/Ped Actn:** 4	**Obj Strk:**										
Unit	**3 :** 1	**Alchl/Drgs:** 0	**Speed:** 40 MPH	**Dir:** E	**Veh Mnvr/Ped Actn:** 4	**Obj Strk:**										
Unit	**4 :** 1	**Alchl/Drgs:** 0	**Speed:** 40 MPH	**Dir:** E	**Veh Mnvr/Ped Actn:** 4	**Obj Strk:**										
607	**103960599**	22.450	01/25/2014 05:23	RAN OFF ROAD - RIGHT	$ 59000	0	0	1	0	1	5	1	1	0	0	
Unit	**1 :** 12	**Alchl/Drgs:** 0	**Speed:** 60 MPH	**Dir:** SE	**Veh Mnvr/Ped Actn:** 4	**Obj Strk:** 42										
608	**104097030**	22.450	06/21/2014 14:19	REAR END, SLOW OR STOP	$ 13000	0	0	1	3	1	1	1	1	0	0	
Unit	**1 :** 1	**Alchl/Drgs:** 0	**Speed:** 25 MPH	**Dir:** W	**Veh Mnvr/Ped Actn:** 4	**Obj Strk:**										
Unit	**2 :** 2	**Alchl/Drgs:** 0	**Speed:** 25 MPH	**Dir:** W	**Veh Mnvr/Ped Actn:** 11	**Obj Strk:**										
Unit	**3 :** 3	**Alchl/Drgs:** 0	**Speed:** 45 MPH	**Dir:** W	**Veh Mnvr/Ped Actn:** 1	**Obj Strk:**										
609	**104086822**	22.450	06/21/2014 16:20	REAR END, SLOW OR STOP	$ 1200	0	0	0	0	1	1	2	1	0	0	
Unit	**1 :** 1	**Alchl/Drgs:** 0	**Speed:** 45 MPH	**Dir:** N	**Veh Mnvr/Ped Actn:** 4	**Obj Strk:**										

All data presented in this report comes explicitly from the Traffic Engineering Accident Analysis System based upon va criteria provided by the report's creator. The onus is strictly upon the user of this report to exercise due diligence in in and further representing this data.

DocuSign Envelope ID: 5C03745C-4B01-4834-A65D-B77F558A4F46

North Carolina Department of Transportation
Traffic Engineering Accident Analysis System
Strip Analysis Report

Acc No	Crash ID	Milepost	Date	Accident Type	Total Damage	Injuries F	A	B	C	Condition R	L	W	Road Ch	Ci	Trfc Ctl Dv	Op
Unit	**2 :** 4	**Alchl/Drgs:**	0	**Speed:** 45 MPH	**Dir:** N	**Veh Mnvr/Ped Actn:**				1			**Obj Strk:**			
610	**104131410**	22.450	08/18/2014 06:55	OTHER COLLISION WITH VEHICLE	$ 4000	0	0	0	0	2	1	3	1	0	0	
Unit	**1 :** 4	**Alchl/Drgs:**	0	**Speed:** 60 MPH	**Dir:** W	**Veh Mnvr/Ped Actn:**				4			**Obj Strk:**			
Unit	**2 :** 4	**Alchl/Drgs:**	0	**Speed:** 60 MPH	**Dir:** W	**Veh Mnvr/Ped Actn:**				4			**Obj Strk:**			
611	**104133400**	22.450	08/22/2014 19:27	FIXED OBJECT	$ 1500	0	0	0	0	1	1	1	1	0	0	
Unit	**1 :** 4	**Alchl/Drgs:**	0	**Speed:** 60 MPH	**Dir:** E	**Veh Mnvr/Ped Actn:**				16			**Obj Strk:**		50	
612	**104168246**	22.450	09/30/2014 09:39	FIXED OBJECT	$ 2000	0	0	0	0	1	1	1	1	0	0	
Unit	**1 :** 5	**Alchl/Drgs:**	0	**Speed:** 60 MPH	**Dir:** W	**Veh Mnvr/Ped Actn:**				4			**Obj Strk:**		50	
613	**104211527**	22.450	11/13/2014 17:27	REAR END, SLOW OR STOP	$ 4500	0	0	0	0	1	5	2	1	0	0	
Unit	**1 :** 2	**Alchl/Drgs:**	0	**Speed:** 20 MPH	**Dir:** W	**Veh Mnvr/Ped Actn:**				1			**Obj Strk:**			
Unit	**2 :** 1	**Alchl/Drgs:**	0	**Speed:** 25 MPH	**Dir:** W	**Veh Mnvr/Ped Actn:**				4			**Obj Strk:**			
614	**104258804**	22.450	12/30/2014 14:26	SIDESWIPE, SAME DIRECTION	$ 12000	0	0	0	1	1	1	2	1	0	0	
Unit	**1 :** 14	**Alchl/Drgs:**	7	**Speed:** 60 MPH	**Dir:** N	**Veh Mnvr/Ped Actn:**				4			**Obj Strk:**			
Unit	**2 :** 1	**Alchl/Drgs:**	0	**Speed:** 60 MPH	**Dir:** N	**Veh Mnvr/Ped Actn:**				4			**Obj Strk:**		50	
615	**104263775**	22.450	01/06/2015 11:18	SIDESWIPE, SAME DIRECTION	$ 1400	0	0	0	0	1	1	1	1	0	0	
Unit	**1 :** 10	**Alchl/Drgs:**	0	**Speed:** 60 MPH	**Dir:** W	**Veh Mnvr/Ped Actn:**				5			**Obj Strk:**			
Unit	**2 :** 2	**Alchl/Drgs:**	0	**Speed:** 60 MPH	**Dir:** W	**Veh Mnvr/Ped Actn:**				4			**Obj Strk:**		50	
616	**104299935**	22.450	02/21/2015 08:50	FIXED OBJECT	$ 20900	0	0	0	0	1	1	7	7	0	0	
Unit	**1 :** 2	**Alchl/Drgs:**	0	**Speed:** 50 MPH	**Dir:** E	**Veh Mnvr/Ped Actn:**				4			**Obj Strk:**		44	
617	**104505658**	22.450	10/01/2015 07:42	REAR END, SLOW OR STOP	$ 19000	0	0	0	0	1	1	1	1	0	0	
Unit	**1 :** 5	**Alchl/Drgs:**	0	**Speed:** 60 MPH	**Dir:** E	**Veh Mnvr/Ped Actn:**				1			**Obj Strk:**			
Unit	**2 :** 1	**Alchl/Drgs:**	0	**Speed:** 60 MPH	**Dir:** E	**Veh Mnvr/Ped Actn:**				1			**Obj Strk:**			
Unit	**3 :** 1	**Alchl/Drgs:**	0	**Speed:** 60 MPH	**Dir:** E	**Veh Mnvr/Ped Actn:**				4			**Obj Strk:**			
618	**104509797**	22.450	10/01/2015 07:42	REAR END, SLOW OR STOP	$ 3400	0	0	0	0	1	1	2	7	0	0	
Unit	**1 :** 4	**Alchl/Drgs:**	0	**Speed:** 55 MPH	**Dir:** E	**Veh Mnvr/Ped Actn:**				11			**Obj Strk:**			
Unit	**2 :** 3	**Alchl/Drgs:**	0	**Speed:** 55 MPH	**Dir:** E	**Veh Mnvr/Ped Actn:**				1			**Obj Strk:**			

DocuSign Envelope ID: 5C03745C-4B01-4834-A65D-B77F558A4F46

North Carolina Department of Transportation
Traffic Engineering Accident Analysis System
Strip Analysis Report

Acc No	Crash ID	Milepost	Date	Accident Type	Total Damage	Injuries F	A	B	C	Condition R	L	W	Road Ch	Ci	Trfc Ctl Dv	Op
619	**104505656**	22.450	10/01/2015 07:43	REAR END, SLOW OR STOP	$ 22000	0	0	0	0	1	1	1	1	0	0	
Unit	**1 :** 1	**Alchl/Drgs:** 0	**Speed:** 60 MPH	**Dir:** E	**Veh Mnvr/Ped Actn:** 4	**Obj Strk:**										
Unit	**2 :** 4	**Alchl/Drgs:** 0	**Speed:** 60 MPH	**Dir:** E	**Veh Mnvr/Ped Actn:** 1	**Obj Strk:**										
Unit	**3 :** 1	**Alchl/Drgs:** 0	**Speed:** 60 MPH	**Dir:** E	**Veh Mnvr/Ped Actn:** 1	**Obj Strk:**										
620	**104519926**	22.450	10/09/2015 14:41	REAR END, SLOW OR STOP	$ 1800	0	0	0	1	1	1	1	1	0	0	
Unit	**1 :** 5	**Alchl/Drgs:** 0	**Speed:** 0 MPH	**Dir:** N	**Veh Mnvr/Ped Actn:** 1	**Obj Strk:**										
Unit	**2 :** 4	**Alchl/Drgs:** 0	**Speed:** 0 MPH	**Dir:** N	**Veh Mnvr/Ped Actn:** 1	**Obj Strk:**										
Unit	**3 :** 1	**Alchl/Drgs:** 0	**Speed:** 0 MPH	**Dir:** N	**Veh Mnvr/Ped Actn:** 1	**Obj Strk:**										
Unit	**4 :** 1	**Alchl/Drgs:** 0	**Speed:** 0 MPH	**Dir:** N	**Veh Mnvr/Ped Actn:** 1	**Obj Strk:**										
Unit	**5 :** 4	**Alchl/Drgs:** 0	**Speed:** 10 MPH	**Dir:** N	**Veh Mnvr/Ped Actn:** 4	**Obj Strk:**										
621	**104522682**	22.450	10/12/2015 08:49	OTHER NON-COLLISION	$ 6200	0	0	0	0	1	1	1	1	0	0	
Unit	**1 :** 11	**Alchl/Drgs:** 0	**Speed:** 55 MPH	**Dir:** E	**Veh Mnvr/Ped Actn:** 4	**Obj Strk:**										
622	**104614206**	22.450	01/14/2016 17:41	REAR END, SLOW OR STOP	$ 12000	0	0	0	0	1	5	1	1	0	0	
Unit	**1 :** 4	**Alchl/Drgs:** 0	**Speed:** 35 MPH	**Dir:** NW	**Veh Mnvr/Ped Actn:** 1	**Obj Strk:**										
Unit	**2 :** 1	**Alchl/Drgs:** 0	**Speed:** 35 MPH	**Dir:** NW	**Veh Mnvr/Ped Actn:** 4	**Obj Strk:**										
623	**104789950**	22.450	07/11/2016 22:11	FIXED OBJECT	$ 7000	0	0	0	0	3	5	3	1	0	0	
Unit	**1 :** 2	**Alchl/Drgs:** 0	**Speed:** 60 MPH	**Dir:** W	**Veh Mnvr/Ped Actn:** 4	**Obj Strk:** 50										
624	**104789949**	22.450	07/11/2016 22:12	REAR END, SLOW OR STOP	$ 6500	0	0	0	0	3	5	3	1	0	0	
Unit	**1 :** 1	**Alchl/Drgs:** 0	**Speed:** 45 MPH	**Dir:** W	**Veh Mnvr/Ped Actn:** 4	**Obj Strk:**										
Unit	**2 :** 4	**Alchl/Drgs:** 0	**Speed:** 45 MPH	**Dir:** W	**Veh Mnvr/Ped Actn:** 11	**Obj Strk:**										
625	**104815326**	22.450	08/10/2016 15:32	REAR END, SLOW OR STOP	$ 4700	0	0	0	0	1	1	2	1	0	0	
Unit	**1 :** 5	**Alchl/Drgs:** 0	**Speed:** 45 MPH	**Dir:** N	**Veh Mnvr/Ped Actn:** 4	**Obj Strk:**										
Unit	**2 :** 2	**Alchl/Drgs:** 0	**Speed:** 45 MPH	**Dir:** N	**Veh Mnvr/Ped Actn:** 11	**Obj Strk:**										
Unit	**3 :** 5	**Alchl/Drgs:** 0	**Speed:** 25 MPH	**Dir:** N	**Veh Mnvr/Ped Actn:** 11	**Obj Strk:**										
626	**104911740**	22.450	11/12/2016 04:46	FIXED OBJECT	$ 1000	0	0	0	0	1	5	1	3	0	0	
Unit	**1 :** 1	**Alchl/Drgs:** 0	**Speed:** 60 MPH	**Dir:** S	**Veh Mnvr/Ped Actn:** 4	**Obj Strk:** 50										
627	**104921546**	22.450	11/21/2016 08:21	REAR END, SLOW OR STOP	$ 13000	0	0	0	1	1	1	1	1	0	0	
Unit	**1 :** 2	**Alchl/Drgs:** 0	**Speed:** 60 MPH	**Dir:** W	**Veh Mnvr/Ped Actn:** 4	**Obj Strk:**										
Unit	**2 :** 1	**Alchl/Drgs:** 0	**Speed:** 60 MPH	**Dir:** W	**Veh Mnvr/Ped Actn:** 1	**Obj Strk:**										

DocuSign Envelope ID: 5C03745C-4B01-4834-A65D-B77F558A4F46

North Carolina Department of Transportation
Traffic Engineering Accident Analysis System
Strip Analysis Report

Acc No	Crash ID	Milepost	Date	Accident Type	Total Damage	Injuries F	A	B	C	Condition R	L	W	Road Ch	Ci	Trfc Ctl Dv	Op
Unit	**3 :** 4	**Alchl/Drgs:**	0	**Speed:** 60 MPH	**Dir:** W	**Veh Mnvr/Ped Actn:**				1			**Obj Strk:**			
628	**104948424**	22.450	12/15/2016 16:48	REAR END, SLOW OR STOP	$ 11500	0	0	0	0	1	1	1	1	0	0	
Unit	**1 :** 1	**Alchl/Drgs:**	0	**Speed:** 50 MPH	**Dir:** W	**Veh Mnvr/Ped Actn:**				4			**Obj Strk:**			
Unit	**2 :** 4	**Alchl/Drgs:**	0	**Speed:** 50 MPH	**Dir:** W	**Veh Mnvr/Ped Actn:**				11			**Obj Strk:**			
629	**105402520**	22.450	03/01/2018 05:37	FIXED OBJECT	$ 800	0	0	0	1	2	5	3	1	0	0	
Unit	**1 :** 1	**Alchl/Drgs:**	0	**Speed:** 60 MPH	**Dir:** W	**Veh Mnvr/Ped Actn:**				4			**Obj Strk:**			50
630	**105417086**	22.450	03/19/2018 08:54	REAR END, SLOW OR STOP	$ 2300	0	0	0	2	1	1	2	3	0	0	
Unit	**1 :** 1	**Alchl/Drgs:**	0	**Speed:** 55 MPH	**Dir:** E	**Veh Mnvr/Ped Actn:**				11			**Obj Strk:**			
Unit	**2 :** 1	**Alchl/Drgs:**	0	**Speed:** 55 MPH	**Dir:** E	**Veh Mnvr/Ped Actn:**				1			**Obj Strk:**			
631	**105554853**	22.450	07/28/2018 12:21	REAR END, SLOW OR STOP	$ 4500	0	0	0	0	1	1	1	1	0	0	
Unit	**1 :** 4	**Alchl/Drgs:**	0	**Speed:** 55 MPH	**Dir:** N	**Veh Mnvr/Ped Actn:**				4			**Obj Strk:**			
Unit	**2 :** 1	**Alchl/Drgs:**	0	**Speed:** 55 MPH	**Dir:** N	**Veh Mnvr/Ped Actn:**				1			**Obj Strk:**			
632	**105596929**	22.450	09/07/2018 15:28	FIXED OBJECT	$ 2000	0	0	0	0	1	1	1	1	0	0	
Unit	**1 :** 1	**Alchl/Drgs:**	0	**Speed:** 60 MPH	**Dir:** E	**Veh Mnvr/Ped Actn:**				4			**Obj Strk:**			44
633	**105623538**	22.450	09/29/2018 14:23	REAR END, SLOW OR STOP	$ 20000	0	0	0	0	1	1	1	1	0	0	
Unit	**1 :** 5	**Alchl/Drgs:**	0	**Speed:** 60 MPH	**Dir:** W	**Veh Mnvr/Ped Actn:**				4			**Obj Strk:**			
Unit	**2 :** 4	**Alchl/Drgs:**	0	**Speed:** 60 MPH	**Dir:** W	**Veh Mnvr/Ped Actn:**				1			**Obj Strk:**			
Unit	**3 :** 4	**Alchl/Drgs:**	0	**Speed:** 60 MPH	**Dir:** W	**Veh Mnvr/Ped Actn:**				1			**Obj Strk:**			
634	**105635383**	22.450	10/12/2018 17:36	REAR END, SLOW OR STOP	$ 6600	0	0	0	1	1	1	1	3	0	0	
Unit	**1 :** 2	**Alchl/Drgs:**	0	**Speed:** 40 MPH	**Dir:** N	**Veh Mnvr/Ped Actn:**				4			**Obj Strk:**			
Unit	**2 :** 4	**Alchl/Drgs:**	0	**Speed:** 0 MPH	**Dir:** S	**Veh Mnvr/Ped Actn:**				1			**Obj Strk:**			
Unit	**3 :** 2	**Alchl/Drgs:**	0	**Speed:** 0 MPH	**Dir:** S	**Veh Mnvr/Ped Actn:**				1			**Obj Strk:**			
635	**105688496**	22.450	11/26/2018 14:17	SIDESWIPE, SAME DIRECTION	$ 2100	0	0	0	0	1	1	1	1	0	0	
Unit	**1 :** 14	**Alchl/Drgs:**	0	**Speed:** 55 MPH	**Dir:** S	**Veh Mnvr/Ped Actn:**				4			**Obj Strk:**			
Unit	**2 :** 2	**Alchl/Drgs:**	0	**Speed:** 55 MPH	**Dir:** S	**Veh Mnvr/Ped Actn:**				5			**Obj Strk:**			50
636	**104520262**	22.457	10/14/2015 04:49	FIXED OBJECT	$ 3000	0	0	1	0	1	5	1	1	0	0	
Unit	**1 :** 1	**Alchl/Drgs:**	0	**Speed:** 60 MPH	**Dir:** SE	**Veh Mnvr/Ped Actn:**				15			**Obj Strk:**			59

DocuSign Envelope ID: 5C03745C-4B01-4834-A65D-B77F558A4F46

North Carolina Department of Transportation
Traffic Engineering Accident Analysis System
Strip Analysis Report

Acc No	Crash ID	Milepost	Date	Accident Type	Total Damage	Injuries F	A	B	C	Condition R	L	W	Road Ch	Ci	Trfc Ctl Dv	Op
637	**104652095**	22.457	02/19/2016 14:49	SIDESWIPE, SAME DIRECTION	$ 3700	0	0	0	0	1	1	1	1	0	0	
Unit	**1 :** 1	**Alchl/Drgs:** 0	**Speed:** 45 MPH	**Dir:** SE	**Veh Mnvr/Ped Actn:** 4	**Obj Strk:**										
Unit	**2 :** 1	**Alchl/Drgs:** 0	**Speed:** 45 MPH	**Dir:** SE	**Veh Mnvr/Ped Actn:** 11	**Obj Strk:**										
638	**104776439**	22.457	06/24/2016 10:48	REAR END, SLOW OR STOP	$ 2400	0	0	0	0	1	1	1	1	0	0	
Unit	**1 :** 1	**Alchl/Drgs:** 0	**Speed:** 60 MPH	**Dir:** N	**Veh Mnvr/Ped Actn:** 4	**Obj Strk:**										
Unit	**2 :** 4	**Alchl/Drgs:** 0	**Speed:** 60 MPH	**Dir:** N	**Veh Mnvr/Ped Actn:** 1	**Obj Strk:**										
639	**104193275**	22.463	10/22/2014 08:04	REAR END, SLOW OR STOP	$ 2000	0	0	0	0	1	1	1	1	0	0	
Unit	**1 :** 1	**Alchl/Drgs:** 0	**Speed:** 50 MPH	**Dir:** E	**Veh Mnvr/Ped Actn:** 4	**Obj Strk:**										
Unit	**2 :** 1	**Alchl/Drgs:** 0	**Speed:** 50 MPH	**Dir:** E	**Veh Mnvr/Ped Actn:** 1	**Obj Strk:**										
640	**104593624**	22.463	12/21/2015 14:18	REAR END, SLOW OR STOP	$ 3000	0	0	0	0	2	1	2	1	0	0	
Unit	**1 :** 4	**Alchl/Drgs:** 0	**Speed:** 60 MPH	**Dir:** W	**Veh Mnvr/Ped Actn:** 4	**Obj Strk:**										
Unit	**2 :** 4	**Alchl/Drgs:** 0	**Speed:** 60 MPH	**Dir:** W	**Veh Mnvr/Ped Actn:** 11	**Obj Strk:**										
641	**105375345**	22.463	02/07/2018 07:54	REAR END, SLOW OR STOP	$ 6000	0	0	0	0	2	1	3	1	0	0	
Unit	**1 :** 2	**Alchl/Drgs:** 0	**Speed:** 40 MPH	**Dir:** W	**Veh Mnvr/Ped Actn:** 4	**Obj Strk:**										
Unit	**2 :** 2	**Alchl/Drgs:** 0	**Speed:** 40 MPH	**Dir:** W	**Veh Mnvr/Ped Actn:** 11	**Obj Strk:**										
642	**103956190**	22.492	01/20/2014 14:21	SIDESWIPE, SAME DIRECTION	$ 1300	0	0	0	0	1	1	1	1	0	0	
Unit	**1 :** 1	**Alchl/Drgs:** 0	**Speed:** 60 MPH	**Dir:** S	**Veh Mnvr/Ped Actn:** 5	**Obj Strk:**										
Unit	**2 :** 1	**Alchl/Drgs:** 0	**Speed:** 60 MPH	**Dir:** S	**Veh Mnvr/Ped Actn:** 4	**Obj Strk:**										
643	**104515718**	22.510	10/10/2015 17:16	REAR END, SLOW OR STOP	$ 6500	0	0	0	0	2	1	3	1	0	0	
Unit	**1 :** 1	**Alchl/Drgs:** 0	**Speed:** 35 MPH	**Dir:** W	**Veh Mnvr/Ped Actn:** 4	**Obj Strk:** 44										
Unit	**2 :** 1	**Alchl/Drgs:** 0	**Speed:** 35 MPH	**Dir:** W	**Veh Mnvr/Ped Actn:** 11	**Obj Strk:**										
644	**104561081**	22.510	11/22/2015 01:55	ANIMAL	$ 3000	0	0	0	0	1	5	1	3	0	0	
Unit	**1 :** 5	**Alchl/Drgs:** 0	**Speed:** 60 MPH	**Dir:** W	**Veh Mnvr/Ped Actn:** 4	**Obj Strk:** 17										
645	**104659548**	22.510	02/26/2016 16:21	REAR END, SLOW OR STOP	$ 2000	0	0	0	0	1	1	1	3	0	0	
Unit	**1 :** 4	**Alchl/Drgs:** 0	**Speed:** 35 MPH	**Dir:** W	**Veh Mnvr/Ped Actn:** 4	**Obj Strk:** 44										
Unit	**2 :** 2	**Alchl/Drgs:** 0	**Speed:** 35 MPH	**Dir:** W	**Veh Mnvr/Ped Actn:** 11	**Obj Strk:**										

DocuSign Envelope ID: 5C03745C-4B01-4834-A65D-B77F558A4F46

North Carolina Department of Transportation
Traffic Engineering Accident Analysis System
Strip Analysis Report

Acc No	Crash ID	Milepost	Date	Accident Type	Total Damage	Injuries F	A	B	C	Condition R	L	W	Road Ch	Ci	Trfc Ctl Dv	Op
646	**104688884**	22.510	03/30/2016 09:33	REAR END, SLOW OR STOP	$ 1200	0	0	0	0	1	1	1	7	0	0	
Unit	**1 :** 1	**Alchl/Drgs:** 0	**Speed:** 50 MPH	**Dir:** S	**Veh Mnvr/Ped Actn:** 4	**Obj Strk:**										
Unit	**2 :** 2	**Alchl/Drgs:** 0	**Speed:** 0 MPH	**Dir:** S	**Veh Mnvr/Ped Actn:** 1	**Obj Strk:**										
647	**104936771**	22.510	11/05/2016 10:18	REAR END, SLOW OR STOP	$ 1000	0	0	0	0	1	1	1	1	0	0	2
Unit	**1 :** 1	**Alchl/Drgs:** 0	**Speed:** 50 MPH	**Dir:** SE	**Veh Mnvr/Ped Actn:** 4	**Obj Strk:**										
Unit	**2 :** 1	**Alchl/Drgs:** 0	**Speed:** 0 MPH	**Dir:** SE	**Veh Mnvr/Ped Actn:** 11	**Obj Strk:**										
648	**104910033**	22.510	11/07/2016 17:46	REAR END, SLOW OR STOP	$ 5500	0	0	0	0	1	2	1	3	0	0	
Unit	**1 :** 1	**Alchl/Drgs:** 0	**Speed:** 45 MPH	**Dir:** W	**Veh Mnvr/Ped Actn:** 4	**Obj Strk:**										
Unit	**2 :** 1	**Alchl/Drgs:** 0	**Speed:** 45 MPH	**Dir:** W	**Veh Mnvr/Ped Actn:** 11	**Obj Strk:**										
649	**104922673**	22.510	11/22/2016 05:39	REAR END, SLOW OR STOP	$ 7000	0	0	0	0	1	5	1	7	0	0	
Unit	**1 :** 1	**Alchl/Drgs:** 0	**Speed:** 85 MPH	**Dir:** N	**Veh Mnvr/Ped Actn:** 4	**Obj Strk:**										
Unit	**2 :** 1	**Alchl/Drgs:** 0	**Speed:** 60 MPH	**Dir:** N	**Veh Mnvr/Ped Actn:** 4	**Obj Strk:**										
650	**105015780**	22.510	02/20/2017 10:37	REAR END, SLOW OR STOP	$ 9000	0	0	0	0	1	1	1	1	0	0	
Unit	**1 :** 16	**Alchl/Drgs:** 0	**Speed:** 55 MPH	**Dir:** W	**Veh Mnvr/Ped Actn:** 11	**Obj Strk:**										
Unit	**2 :** 16	**Alchl/Drgs:** 0	**Speed:** 50 MPH	**Dir:** W	**Veh Mnvr/Ped Actn:** 11	**Obj Strk:**										
651	**105188520**	22.510	08/12/2017 14:13	REAR END, SLOW OR STOP	$ 2000	0	0	0	0	1	1	1	1	0	0	
Unit	**1 :** 1	**Alchl/Drgs:** 0	**Speed:** 60 MPH	**Dir:** W	**Veh Mnvr/Ped Actn:** 4	**Obj Strk:**										
Unit	**2 :** 1	**Alchl/Drgs:** 0	**Speed:** 60 MPH	**Dir:** W	**Veh Mnvr/Ped Actn:** 1	**Obj Strk:**										
652	**105534108**	22.510	07/06/2018 14:15	REAR END, SLOW OR STOP	$ 1000	0	0	0	0	1	1	1	1	0	0	
Unit	**1 :** 4	**Alchl/Drgs:** 1	**Speed:** 30 MPH	**Dir:** E	**Veh Mnvr/Ped Actn:** 4	**Obj Strk:**										
Unit	**2 :** 10	**Alchl/Drgs:** 0	**Speed:** 30 MPH	**Dir:** E	**Veh Mnvr/Ped Actn:** 1	**Obj Strk:**										
653	**105549175**	22.510	07/22/2018 16:26	REAR END, SLOW OR STOP	$ 400	0	0	0	0	2	1	3	1	0	0	
Unit	**1 :** 4	**Alchl/Drgs:** 0	**Speed:** 10 MPH	**Dir:** E	**Veh Mnvr/Ped Actn:** 4	**Obj Strk:**										
Unit	**2 :** 4	**Alchl/Drgs:** 0	**Speed:** 10 MPH	**Dir:** E	**Veh Mnvr/Ped Actn:** 1	**Obj Strk:**										
654	**105554759**	22.510	07/27/2018 19:32	SIDESWIPE, SAME DIRECTION	$ 4500	0	0	0	0	1	1	1	1	0	0	
Unit	**1 :** 14	**Alchl/Drgs:** 0	**Speed:** 60 MPH	**Dir:** W	**Veh Mnvr/Ped Actn:** 5	**Obj Strk:**										
Unit	**2 :** 1	**Alchl/Drgs:** 0	**Speed:** 60 MPH	**Dir:** W	**Veh Mnvr/Ped Actn:** 4	**Obj Strk:**										

DocuSign Envelope ID: 5C03745C-4B01-4834-A65D-B77F558A4F46

North Carolina Department of Transportation
Traffic Engineering Accident Analysis System
Strip Analysis Report

Acc No	Crash ID	Milepost	Date	Accident Type	Total Damage	Injuries F	A	B	C	Condition R	L	W	Road Ch	Ci	Trfc Ctl Dv	Op
655	**105647211**	22.510	10/22/2018 15:25	REAR END, SLOW OR STOP	$ 1500	0	0	0	0	1	1	1	1	0	0	
Unit	**1 :** 10	**Alchl/Drgs:** 0	**Speed:** 45 MPH	**Dir:** E	**Veh Mnvr/Ped Actn:** 4	**Obj Strk:**										
Unit	**2 :** 1	**Alchl/Drgs:** 0	**Speed:** 45 MPH	**Dir:** E	**Veh Mnvr/Ped Actn:** 11	**Obj Strk:**										
656	**104335180**	22.557	03/30/2015 17:25	REAR END, SLOW OR STOP	$ 2500	0	0	0	1	1	1	1	1	0	0	
Unit	**1 :** 1	**Alchl/Drgs:** 0	**Speed:** 25 MPH	**Dir:** SE	**Veh Mnvr/Ped Actn:** 1	**Obj Strk:**										
Unit	**2 :** 2	**Alchl/Drgs:** 0	**Speed:** 40 MPH	**Dir:** SE	**Veh Mnvr/Ped Actn:** 4	**Obj Strk:**										
657	**104363484**	22.562	04/27/2015 17:25	REAR END, SLOW OR STOP	$ 8000	0	0	0	0	1	1	1	1	0	0	
Unit	**1 :** 1	**Alchl/Drgs:** 0	**Speed:** 35 MPH	**Dir:** SE	**Veh Mnvr/Ped Actn:** 1	**Obj Strk:**										
Unit	**2 :** 1	**Alchl/Drgs:** 0	**Speed:** 40 MPH	**Dir:** SE	**Veh Mnvr/Ped Actn:** 4	**Obj Strk:**										
658	**105145760**	22.562	06/27/2017 18:13	REAR END, SLOW OR STOP	$ 22000	0	0	0	1	1	1	1	1	0	0	
Unit	**1 :** 2	**Alchl/Drgs:** 0	**Speed:** 45 MPH	**Dir:** E	**Veh Mnvr/Ped Actn:** 4	**Obj Strk:**										
Unit	**2 :** 2	**Alchl/Drgs:** 0	**Speed:** 45 MPH	**Dir:** E	**Veh Mnvr/Ped Actn:** 1	**Obj Strk:**										
Unit	**3 :** 1	**Alchl/Drgs:** 0	**Speed:** 45 MPH	**Dir:** E	**Veh Mnvr/Ped Actn:** 1	**Obj Strk:**										
Unit	**4 :** 2	**Alchl/Drgs:** 0	**Speed:** 45 MPH	**Dir:** E	**Veh Mnvr/Ped Actn:** 1	**Obj Strk:**										
659	**104341837**	22.563	04/03/2015 13:05	REAR END, SLOW OR STOP	$ 1900	0	0	0	0	1	1	1	1	0	0	
Unit	**1 :** 5	**Alchl/Drgs:** 0	**Speed:** 20 MPH	**Dir:** N	**Veh Mnvr/Ped Actn:** 4	**Obj Strk:**										
Unit	**2 :** 1	**Alchl/Drgs:** 0	**Speed:** 0 MPH	**Dir:** N	**Veh Mnvr/Ped Actn:** 1	**Obj Strk:**										
Unit	**3 :** 1	**Alchl/Drgs:** 0	**Speed:** 0 MPH	**Dir:** N	**Veh Mnvr/Ped Actn:** 1	**Obj Strk:**										
660	**104371529**	22.563	05/07/2015 14:22	REAR END, SLOW OR STOP	$ 1500	0	0	0	0	2	1	3	1	0	0	
Unit	**1 :** 1	**Alchl/Drgs:** 0	**Speed:** 45 MPH	**Dir:** W	**Veh Mnvr/Ped Actn:** 4	**Obj Strk:**										
Unit	**2 :** 1	**Alchl/Drgs:** 0	**Speed:** 45 MPH	**Dir:** W	**Veh Mnvr/Ped Actn:** 1	**Obj Strk:**										
661	**104374311**	22.563	05/07/2015 14:23	REAR END, SLOW OR STOP	$ 3700	0	0	0	0	2	1	3	1	0	0	
Unit	**1 :** 1	**Alchl/Drgs:** 0	**Speed:** 45 MPH	**Dir:** W	**Veh Mnvr/Ped Actn:** 4	**Obj Strk:**										
Unit	**2 :** 1	**Alchl/Drgs:** 0	**Speed:** 0 MPH	**Dir:** W	**Veh Mnvr/Ped Actn:** 1	**Obj Strk:**										
Unit	**3 :** 1	**Alchl/Drgs:** 0	**Speed:** 0 MPH	**Dir:** W	**Veh Mnvr/Ped Actn:** 1	**Obj Strk:**										
662	**104711722**	22.563	04/22/2016 18:39	REAR END, SLOW OR STOP	$ 2800	0	0	0	0	2	1	3	1	0	0	
Unit	**1 :** 4	**Alchl/Drgs:** 0	**Speed:** 45 MPH	**Dir:** W	**Veh Mnvr/Ped Actn:** 4	**Obj Strk:**										
Unit	**2 :** 4	**Alchl/Drgs:** 0	**Speed:** 45 MPH	**Dir:** W	**Veh Mnvr/Ped Actn:** 1	**Obj Strk:**										

All data presented in this report comes explicitly from the Traffic Engineering Accident Analysis System based upon va criteria provided by the report's creator. The onus is strictly upon the user of this report to exercise due diligence in in and further representing this data.

DocuSign Envelope ID: 5C03745C-4B01-4834-A65D-B77F558A4F46

North Carolina Department of Transportation
Traffic Engineering Accident Analysis System
Strip Analysis Report

Acc No	Crash ID	Milepost	Date	Accident Type	Total Damage	Injuries F	A	B	C	Condition R	L	W	Road Ch	Ci	Trfc Ctl Dv	Op
663	**104843749**	22.563	09/09/2016 14:16	REAR END, SLOW OR STOP	$ 22000	0	0	1	1	1	1	1	1	0	0	
Unit	**1 :** 4	**Alchl/Drgs:**	0	**Speed:** 50 MPH	**Dir:** W	**Veh Mnvr/Ped Actn:**			11		**Obj Strk:**					
Unit	**2 :** 1	**Alchl/Drgs:**	0	**Speed:** 60 MPH	**Dir:** W	**Veh Mnvr/Ped Actn:**			4		**Obj Strk:**					
664	**104900522**	22.563	11/01/2016 14:46	REAR END, SLOW OR STOP	$ 1500	0	0	0	0	1	1	1	1	0	0	
Unit	**1 :** 2	**Alchl/Drgs:**	0	**Speed:** 60 MPH	**Dir:** E	**Veh Mnvr/Ped Actn:**			4		**Obj Strk:**					
Unit	**2 :** 1	**Alchl/Drgs:**	0	**Speed:** 60 MPH	**Dir:** E	**Veh Mnvr/Ped Actn:**			1		**Obj Strk:**					
665	**104905836**	22.563	11/07/2016 07:40	REAR END, SLOW OR STOP	$ 2700	0	0	0	0	1	1	1	1	0	0	
Unit	**1 :** 1	**Alchl/Drgs:**	0	**Speed:** 65 MPH	**Dir:** N	**Veh Mnvr/Ped Actn:**			4		**Obj Strk:**					
Unit	**2 :** 1	**Alchl/Drgs:**	0	**Speed:** 65 MPH	**Dir:** N	**Veh Mnvr/Ped Actn:**			11		**Obj Strk:**					
666	**105596734**	22.563	09/06/2018 14:55	REAR END, SLOW OR STOP	$ 1000	0	0	0	0	1	1	1	1	0	0	
Unit	**1 :** 1	**Alchl/Drgs:**	0	**Speed:** 60 MPH	**Dir:** E	**Veh Mnvr/Ped Actn:**			4		**Obj Strk:**					
Unit	**2 :** 5	**Alchl/Drgs:**	0	**Speed:** 40 MPH	**Dir:** E	**Veh Mnvr/Ped Actn:**			11		**Obj Strk:**					
667	**105658532**	22.563	11/01/2018 07:54	REAR END, SLOW OR STOP	$ 6000	0	0	0	0	1	1	2	1	0	0	
Unit	**1 :** 2	**Alchl/Drgs:**	0	**Speed:** 60 MPH	**Dir:** W	**Veh Mnvr/Ped Actn:**			4		**Obj Strk:**					
Unit	**2 :** 2	**Alchl/Drgs:**	0	**Speed:** 50 MPH	**Dir:** W	**Veh Mnvr/Ped Actn:**			11		**Obj Strk:**					
668	**104333258**	22.610	03/27/2015 11:21	REAR END, SLOW OR STOP	$ 6500	0	0	0	0	1	1	2	3	0	0	
Unit	**1 :** 4	**Alchl/Drgs:**	0	**Speed:** 40 MPH	**Dir:** W	**Veh Mnvr/Ped Actn:**			4		**Obj Strk:**					
Unit	**2 :** 4	**Alchl/Drgs:**	0	**Speed:** 40 MPH	**Dir:** W	**Veh Mnvr/Ped Actn:**			11		**Obj Strk:**					
669	**104669120**	22.610	03/08/2016 12:18	SIDESWIPE, SAME DIRECTION	$ 9700	0	0	0	1	1	1	1	1	0	0	
Unit	**1 :** 11	**Alchl/Drgs:**	0	**Speed:** 60 MPH	**Dir:** E	**Veh Mnvr/Ped Actn:**			4		**Obj Strk:**					
Unit	**2 :** 1	**Alchl/Drgs:**	0	**Speed:** 60 MPH	**Dir:** E	**Veh Mnvr/Ped Actn:**			4		**Obj Strk:**					
670	**104905834**	22.610	11/07/2016 07:38	REAR END, SLOW OR STOP	$ 3200	0	0	0	0	1	1	1	3	0	0	
Unit	**1 :** 4	**Alchl/Drgs:**	0	**Speed:** 30 MPH	**Dir:** N	**Veh Mnvr/Ped Actn:**			4		**Obj Strk:**					
Unit	**2 :** 5	**Alchl/Drgs:**	0	**Speed:** 0 MPH	**Dir:** N	**Veh Mnvr/Ped Actn:**			1		**Obj Strk:**					
671	**105206519**	22.610	08/30/2017 08:57	REAR END, SLOW OR STOP	$ 15000	0	0	0	0	1	1	1	1	0	0	
Unit	**1 :** 12	**Alchl/Drgs:**	0	**Speed:** 60 MPH	**Dir:** W	**Veh Mnvr/Ped Actn:**			4		**Obj Strk:**					
Unit	**2 :** 12	**Alchl/Drgs:**	0	**Speed:** 60 MPH	**Dir:** W	**Veh Mnvr/Ped Actn:**			4		**Obj Strk:**					
Unit	**3 :** 4	**Alchl/Drgs:**	0	**Speed:** 60 MPH	**Dir:** W	**Veh Mnvr/Ped Actn:**			1		**Obj Strk:**					

DocuSign Envelope ID: 5C03745C-4B01-4834-A65D-B77F558A4F46

North Carolina Department of Transportation
Traffic Engineering Accident Analysis System
Strip Analysis Report

Acc No	Crash ID	Milepost	Date	Accident Type	Total Damage	Injuries F	A	B	C	Condition R	L	W	Road Ch	Ci	Trfc Ctl Dv	Op
672	**105400922**	22.610	03/02/2018 12:21	FIXED OBJECT	$ 1000	0	0	0	0	1	1	1	3	0	0	
Unit	**1 :** 1	**Alchl/Drgs:** 0	**Speed:** 60 MPH	**Dir:** W	**Veh Mnvr/Ped Actn:** 4	**Obj Strk:** 42										
673	**105423229**	22.610	03/23/2018 16:17	REAR END, SLOW OR STOP	$ 15000	0	0	0	1	1	1	1	1	0	0	
Unit	**1 :** 5	**Alchl/Drgs:** 0	**Speed:** 50 MPH	**Dir:** E	**Veh Mnvr/Ped Actn:** 4	**Obj Strk:**										
Unit	**2 :** 1	**Alchl/Drgs:** 0	**Speed:** 50 MPH	**Dir:** E	**Veh Mnvr/Ped Actn:** 1	**Obj Strk:**										
Unit	**3 :** 1	**Alchl/Drgs:** 0	**Speed:** 50 MPH	**Dir:** E	**Veh Mnvr/Ped Actn:** 1	**Obj Strk:**										
Unit	**4 :** 1	**Alchl/Drgs:** 0	**Speed:** 50 MPH	**Dir:** E	**Veh Mnvr/Ped Actn:** 1	**Obj Strk:**										
674	**104817979**	22.662	08/14/2016 14:28	REAR END, SLOW OR STOP	$ 6500	0	0	0	0	1	1	1	1	0	0	
Unit	**1 :** 4	**Alchl/Drgs:** 0	**Speed:** 60 MPH	**Dir:** E	**Veh Mnvr/Ped Actn:** 4	**Obj Strk:**										
Unit	**2 :** 2	**Alchl/Drgs:** 0	**Speed:** 60 MPH	**Dir:** E	**Veh Mnvr/Ped Actn:** 11	**Obj Strk:**										
675	**105002696**	22.662	02/08/2017 14:49	OVERTURN/ROLLOVER	$ 3000	0	0	0	1	1	1	1	1	0	0	
Unit	**1 :** 2	**Alchl/Drgs:** 0	**Speed:** 55 MPH	**Dir:** E	**Veh Mnvr/Ped Actn:** 4	**Obj Strk:**										
676	**105686021**	22.662	11/22/2018 01:58	ANIMAL	$ 1500	0	0	0	0	1	5	1	1	0	0	
Unit	**1 :** 1	**Alchl/Drgs:** 0	**Speed:** 60 MPH	**Dir:** W	**Veh Mnvr/Ped Actn:** 4	**Obj Strk:** 17										
677	**104038790**	22.663	04/20/2014 23:04	REAR END, SLOW OR STOP	$ 12000	0	0	1	1	1	5	1	1	0	0	
Unit	**1 :** 2	**Alchl/Drgs:** 0	**Speed:** 60 MPH	**Dir:** N	**Veh Mnvr/Ped Actn:** 4	**Obj Strk:**										
Unit	**2 :** 2	**Alchl/Drgs:** 0	**Speed:** 0 MPH	**Dir:** N	**Veh Mnvr/Ped Actn:** 1	**Obj Strk:**										
678	**104075605**	22.663	06/06/2014 15:07	REAR END, SLOW OR STOP	$ 1900	0	0	0	0	1	1	1	1	0	0	
Unit	**1 :** 2	**Alchl/Drgs:** 0	**Speed:** 70 MPH	**Dir:** N	**Veh Mnvr/Ped Actn:** 4	**Obj Strk:**										
Unit	**2 :** 2	**Alchl/Drgs:** 0	**Speed:** 50 MPH	**Dir:** N	**Veh Mnvr/Ped Actn:** 11	**Obj Strk:**										
Unit	**3 :** 4	**Alchl/Drgs:** 0	**Speed:** 50 MPH	**Dir:** N	**Veh Mnvr/Ped Actn:** 1	**Obj Strk:**										
679	**104097388**	22.663	06/26/2014 14:21	SIDESWIPE, SAME DIRECTION	$ 23000	0	0	0	0	1	1	1	3	0	0	
Unit	**1 :** 12	**Alchl/Drgs:** 0	**Speed:** 60 MPH	**Dir:** N	**Veh Mnvr/Ped Actn:** 4	**Obj Strk:**										
Unit	**2 :** 2	**Alchl/Drgs:** 0	**Speed:** 60 MPH	**Dir:** N	**Veh Mnvr/Ped Actn:** 5	**Obj Strk:**										
680	**104101637**	22.663	07/11/2014 11:00	REAR END, SLOW OR STOP	$ 4350	0	0	0	0	1	1	1	1	0	0	
Unit	**1 :** 4	**Alchl/Drgs:** 0	**Speed:** 25 MPH	**Dir:** S	**Veh Mnvr/Ped Actn:** 4	**Obj Strk:**										
Unit	**2 :** 1	**Alchl/Drgs:** 0	**Speed:** 5 MPH	**Dir:** S	**Veh Mnvr/Ped Actn:** 11	**Obj Strk:**										
Unit	**3 :** 1	**Alchl/Drgs:** 0	**Speed:** 0 MPH	**Dir:** S	**Veh Mnvr/Ped Actn:** 1	**Obj Strk:**										
Unit	**4 :** 1	**Alchl/Drgs:** 0	**Speed:** 0 MPH	**Dir:** S	**Veh Mnvr/Ped Actn:** 1	**Obj Strk:**										

DocuSign Envelope ID: 5C03745C-4B01-4834-A65D-B77F558A4F46

North Carolina Department of Transportation
Traffic Engineering Accident Analysis System
Strip Analysis Report

Acc No	Crash ID	Milepost	Date	Accident Type	Total Damage	Injuries F	A	B	C	Condition R	L	W	Road Ch	Ci	Trfc Ctl Dv	Op
681	**104101865**	22.663	07/13/2014 14:18	REAR END, SLOW OR STOP	$ 5000	0	0	0	0	1	1	2	1	0	0	
Unit	**1 :** 2	**Alchl/Drgs:** 0	**Speed:** 55 MPH	**Dir:** W	**Veh Mnvr/Ped Actn:** 4	**Obj Strk:**										
Unit	**2 :** 4	**Alchl/Drgs:** 0	**Speed:** 55 MPH	**Dir:** W	**Veh Mnvr/Ped Actn:** 1	**Obj Strk:**										
682	**104219765**	22.663	11/19/2014 08:24	REAR END, SLOW OR STOP	$ 3700	0	0	0	0	1	1	1	1	0	0	
Unit	**1 :** 4	**Alchl/Drgs:** 0	**Speed:** 60 MPH	**Dir:** N	**Veh Mnvr/Ped Actn:** 4	**Obj Strk:**										
Unit	**2 :** 1	**Alchl/Drgs:** 0	**Speed:** 60 MPH	**Dir:** N	**Veh Mnvr/Ped Actn:** 11	**Obj Strk:**										
683	**104336001**	22.663	03/30/2015 16:08	REAR END, SLOW OR STOP	$ 2000	0	0	0	0	1	1	1	1	0	0	
Unit	**1 :** 1	**Alchl/Drgs:** 0	**Speed:** 45 MPH	**Dir:** N	**Veh Mnvr/Ped Actn:** 4	**Obj Strk:**										
Unit	**2 :** 1	**Alchl/Drgs:** 0	**Speed:** 45 MPH	**Dir:** N	**Veh Mnvr/Ped Actn:** 11	**Obj Strk:**										
684	**104424128**	22.663	07/02/2015 17:28	REAR END, SLOW OR STOP	$ 3500	0	0	0	0	1	1	1	1	0	0	
Unit	**1 :** 1	**Alchl/Drgs:** 0	**Speed:** 65 MPH	**Dir:** E	**Veh Mnvr/Ped Actn:** 4	**Obj Strk:**										
Unit	**2 :** 5	**Alchl/Drgs:** 0	**Speed:** 60 MPH	**Dir:** E	**Veh Mnvr/Ped Actn:** 1	**Obj Strk:**										
685	**104524643**	22.663	10/20/2015 08:11	REAR END, SLOW OR STOP	$ 1600	0	0	0	2	1	1	1	1	0	0	
Unit	**1 :** 4	**Alchl/Drgs:** 0	**Speed:** 25 MPH	**Dir:** NW	**Veh Mnvr/Ped Actn:** 4	**Obj Strk:**										
Unit	**2 :** 4	**Alchl/Drgs:** 0	**Speed:** 0 MPH	**Dir:** NW	**Veh Mnvr/Ped Actn:** 1	**Obj Strk:**										
686	**105070075**	22.663	04/14/2017 13:37	REAR END, SLOW OR STOP	$ 3500	0	0	0	0	1	1	1	1	0	0	
Unit	**1 :** 2	**Alchl/Drgs:** 0	**Speed:** 55 MPH	**Dir:** W	**Veh Mnvr/Ped Actn:** 4	**Obj Strk:**										
Unit	**2 :** 1	**Alchl/Drgs:** 0	**Speed:** 0 MPH	**Dir:** W	**Veh Mnvr/Ped Actn:** 1	**Obj Strk:**										
687	**105070876**	22.663	04/14/2017 13:45	REAR END, SLOW OR STOP	$ 7000	0	0	0	0	1	1	1	1	0	0	
Unit	**1 :** 4	**Alchl/Drgs:** 0	**Speed:** 55 MPH	**Dir:** W	**Veh Mnvr/Ped Actn:** 4	**Obj Strk:**										
Unit	**2 :** 1	**Alchl/Drgs:** 0	**Speed:** 0 MPH	**Dir:** W	**Veh Mnvr/Ped Actn:** 1	**Obj Strk:**										
688	**105123380**	22.663	06/05/2017 15:29	SIDESWIPE, SAME DIRECTION	$ 1000	0	0	0	0	2	1	3	1	0	0	
Unit	**1 :** 10	**Alchl/Drgs:** 0	**Speed:** 50 MPH	**Dir:** S	**Veh Mnvr/Ped Actn:** 4	**Obj Strk:**										
Unit	**2 :** 4	**Alchl/Drgs:** 0	**Speed:** 50 MPH	**Dir:** S	**Veh Mnvr/Ped Actn:** 4	**Obj Strk:**										
689	**105181811**	22.663	08/06/2017 12:07	REAR END, SLOW OR STOP	$ 3300	0	0	0	1	1	1	1	1	0	0	
Unit	**1 :** 4	**Alchl/Drgs:** 0	**Speed:** 50 MPH	**Dir:** W	**Veh Mnvr/Ped Actn:** 4	**Obj Strk:**										
Unit	**2 :** 4	**Alchl/Drgs:** 0	**Speed:** 50 MPH	**Dir:** W	**Veh Mnvr/Ped Actn:** 11	**Obj Strk:**										

DocuSign Envelope ID: 5C03745C-4B01-4834-A65D-B77F558A4F46

North Carolina Department of Transportation
Traffic Engineering Accident Analysis System
Strip Analysis Report

Acc No	Crash ID	Milepost	Date	Accident Type	Total Damage	Injuries F	A	B	C	Condition R	L	W	Road Ch	Ci	Trfc Ctl Dv	Op
690	**105209240**	22.663	09/01/2017 16:58	REAR END, SLOW OR STOP	$ 2000	0	0	0	0	1	1	1	3	0	0	
Unit	**1 :** 4	**Alchl/Drgs:** 0	**Speed:** 30 MPH	**Dir:** E	**Veh Mnvr/Ped Actn:** 4	**Obj Strk:**										
Unit	**2 :** 4	**Alchl/Drgs:** 0	**Speed:** 10 MPH	**Dir:** E	**Veh Mnvr/Ped Actn:** 11	**Obj Strk:**										
691	**105332253**	22.663	12/23/2017 14:13	REAR END, SLOW OR STOP	$ 8500	0	0	0	0	2	1	3	1	0	0	
Unit	**1 :** 1	**Alchl/Drgs:** 0	**Speed:** 50 MPH	**Dir:** W	**Veh Mnvr/Ped Actn:** 4	**Obj Strk:**										
Unit	**2 :** 1	**Alchl/Drgs:** 0	**Speed:** 0 MPH	**Dir:** W	**Veh Mnvr/Ped Actn:** 1	**Obj Strk:**										
692	**105674780**	22.663	11/14/2018 17:57	REAR END, SLOW OR STOP	$ 4000	0	0	0	0	2	5	3	1	0	0	
Unit	**1 :** 12	**Alchl/Drgs:** 0	**Speed:** 35 MPH	**Dir:** W	**Veh Mnvr/Ped Actn:** 4	**Obj Strk:**										
Unit	**2 :** 4	**Alchl/Drgs:** 0	**Speed:** 35 MPH	**Dir:** W	**Veh Mnvr/Ped Actn:** 11	**Obj Strk:**										
693	**105725233**	22.663	12/28/2018 17:57	REAR END, SLOW OR STOP	$ 6500	0	0	0	1	2	5	2	1	0	0	
Unit	**1 :** 1	**Alchl/Drgs:** 0	**Speed:** 55 MPH	**Dir:** E	**Veh Mnvr/Ped Actn:** 1	**Obj Strk:**										
Unit	**2 :** 1	**Alchl/Drgs:** 0	**Speed:** 55 MPH	**Dir:** E	**Veh Mnvr/Ped Actn:** 4	**Obj Strk:**										
694	**104668177**	22.665	03/05/2016 20:13	REAR END, SLOW OR STOP	$ 18182	0	0	0	2	1	5	2	1	0	0	
Unit	**1 :** 31	**Alchl/Drgs:** 0	**Speed:** 0 MPH	**Dir:** E	**Veh Mnvr/Ped Actn:** 12	**Obj Strk:**										
Unit	**2 :** 1	**Alchl/Drgs:** 0	**Speed:** 60 MPH	**Dir:** E	**Veh Mnvr/Ped Actn:** 4	**Obj Strk:**										
695	**105156064**	22.665	07/09/2017 12:05	OVERTURN/ROLLOVER	$ 10000	1	1	0	0	1	1	1	1	0	0	
Unit	**1 :** 20	**Alchl/Drgs:** 0	**Speed:** 60 MPH	**Dir:** W	**Veh Mnvr/Ped Actn:** 4	**Obj Strk:** 44										
696	**105545923**	22.665	07/18/2018 17:26	REAR END, SLOW OR STOP	$ 4500	0	0	0	0	1	1	1	1	0	0	
Unit	**1 :** 1	**Alchl/Drgs:** 0	**Speed:** 35 MPH	**Dir:** E	**Veh Mnvr/Ped Actn:** 4	**Obj Strk:**										
Unit	**2 :** 4	**Alchl/Drgs:** 0	**Speed:** 0 MPH	**Dir:** E	**Veh Mnvr/Ped Actn:** 1	**Obj Strk:**										
697	**105095208**	22.710	05/09/2017 15:06	REAR END, SLOW OR STOP	$ 5000	0	0	0	0	1	1	1	1	0	0	
Unit	**1 :** 12	**Alchl/Drgs:** 0	**Speed:** 45 MPH	**Dir:** W	**Veh Mnvr/Ped Actn:** 4	**Obj Strk:**										
Unit	**2 :** 12	**Alchl/Drgs:** 0	**Speed:** 45 MPH	**Dir:** W	**Veh Mnvr/Ped Actn:** 4	**Obj Strk:**										
698	**105104611**	22.710	05/19/2017 09:47	REAR END, SLOW OR STOP	$ 6000	0	0	0	0	1	1	1	1	0	0	
Unit	**1 :** 12	**Alchl/Drgs:** 0	**Speed:** 60 MPH	**Dir:** E	**Veh Mnvr/Ped Actn:** 4	**Obj Strk:**										
Unit	**2 :** 1	**Alchl/Drgs:** 0	**Speed:** 60 MPH	**Dir:** E	**Veh Mnvr/Ped Actn:** 1	**Obj Strk:**										

DocuSign Envelope ID: 5C03745C-4B01-4834-A65D-B77F558A4F46

North Carolina Department of Transportation
Traffic Engineering Accident Analysis System
Strip Analysis Report

Acc No	Crash ID	Milepost	Date	Accident Type	Total Damage	Injuries F	A	B	C	Condition R	L	W	Road Ch	Ci	Trfc Ctl Dv	Op
699	**105575649**	22.710	08/18/2018 14:38	FIXED OBJECT	$ 13700	0	0	0	0	1	1	1	1	0	0	
Unit	**1 :** 1	**Alchl/Drgs:**	0	**Speed:** 60 MPH	**Dir:** E	**Veh Mnvr/Ped Actn:**			4			**Obj Strk:**			44	
Unit	**2 :** 1	**Alchl/Drgs:**	0	**Speed:** 60 MPH	**Dir:** E	**Veh Mnvr/Ped Actn:**			1			**Obj Strk:**				
Unit	**3 :** 4	**Alchl/Drgs:**	0	**Speed:** 60 MPH	**Dir:** E	**Veh Mnvr/Ped Actn:**			1			**Obj Strk:**				
700	**104309496**	22.725	03/02/2015 16:59	FIXED OBJECT	$ 1300	0	0	0	0	7	1	1	1	0	0	
Unit	**1 :** 2	**Alchl/Drgs:**	0	**Speed:** 50 MPH	**Dir:** E	**Veh Mnvr/Ped Actn:**			16			**Obj Strk:**			44	
701	**105643487**	22.725	10/17/2018 02:24	MOVABLE OBJECT	$ 1000	0	0	0	0	2	5	2	1	2	0	
Unit	**1 :** 1	**Alchl/Drgs:**	0	**Speed:** 60 MPH	**Dir:** W	**Veh Mnvr/Ped Actn:**			4			**Obj Strk:**			18	
702	**105059015**	22.744	04/04/2017 22:05	FIXED OBJECT	$ 1000	0	0	0	0	1	5	1	1	0	0	
Unit	**1 :** 1	**Alchl/Drgs:**	0	**Speed:** 75 MPH	**Dir:** S	**Veh Mnvr/Ped Actn:**			4			**Obj Strk:**			33	
703	**105234575**	22.754	09/27/2017 16:22	OTHER COLLISION WITH VEHICLE	$ 13000	0	0	0	0	1	1	1	1	0	0	
Unit	**1 :** 14	**Alchl/Drgs:**	0	**Speed:** 55 MPH	**Dir:** E	**Veh Mnvr/Ped Actn:**			4			**Obj Strk:**				
Unit	**2 :** 4	**Alchl/Drgs:**	0	**Speed:** 55 MPH	**Dir:** E	**Veh Mnvr/Ped Actn:**			5			**Obj Strk:**				
704	**104030334**	22.755	04/02/2014 21:46	SIDESWIPE, SAME DIRECTION	$ 15700	0	0	0	0	1	4	1	1	0		2
Unit	**1 :** 1	**Alchl/Drgs:**	0	**Speed:** 60 MPH	**Dir:** W	**Veh Mnvr/Ped Actn:**			4			**Obj Strk:**				
Unit	**2 :** 10	**Alchl/Drgs:**	0	**Speed:** 0 MPH	**Dir:** W	**Veh Mnvr/Ped Actn:**			1			**Obj Strk:**				
705	**104039648**	22.755	04/07/2014 09:06	ANGLE	$ 4000	0	0	0	0	2	1	3	1	0	0	2
Unit	**1 :** 1	**Alchl/Drgs:**	0	**Speed:** 55 MPH	**Dir:** W	**Veh Mnvr/Ped Actn:**			4			**Obj Strk:**			64	
Unit	**2 :** 2	**Alchl/Drgs:**	0	**Speed:** 60 MPH	**Dir:** W	**Veh Mnvr/Ped Actn:**			4			**Obj Strk:**				
706	**104354472**	22.755	04/18/2015 11:13	MOVABLE OBJECT	$ 1000	0	0	0	0	1	1	1	1	0	0	
Unit	**1 :** 12	**Alchl/Drgs:**	0	**Speed:** 60 MPH	**Dir:** E	**Veh Mnvr/Ped Actn:**			4			**Obj Strk:**				
Unit	**2 :** 4	**Alchl/Drgs:**	0	**Speed:** 60 MPH	**Dir:** E	**Veh Mnvr/Ped Actn:**			4			**Obj Strk:**			18	
707	**104364609**	22.755	04/28/2015 07:41	REAR END, SLOW OR STOP	$ 2200	0	0	0	0	1	1	1	1	0	0	
Unit	**1 :** 1	**Alchl/Drgs:**	0	**Speed:** 60 MPH	**Dir:** S	**Veh Mnvr/Ped Actn:**			4			**Obj Strk:**				
Unit	**2 :** 1	**Alchl/Drgs:**	0	**Speed:** 60 MPH	**Dir:** S	**Veh Mnvr/Ped Actn:**			11			**Obj Strk:**				
708	**104385136**	22.755	05/19/2015 18:19	REAR END, SLOW OR STOP	$ 20000	0	0	0	1	1	1	1	1	0	0	
Unit	**1 :** 4	**Alchl/Drgs:**	0	**Speed:** 70 MPH	**Dir:** N	**Veh Mnvr/Ped Actn:**			4			**Obj Strk:**				

All data presented in this report comes explicitly from the Traffic Engineering Accident Analysis System based upon va criteria provided by the report's creator. The onus is strictly upon the user of this report to exercise due diligence in in and further representing this data.

DocuSign Envelope ID: 5C03745C-4B01-4834-A65D-B77F558A4F46

North Carolina Department of Transportation
Traffic Engineering Accident Analysis System
Strip Analysis Report

Acc No	Crash ID	Milepost	Date	Accident Type	Total Damage	Injuries F	A	B	C	Condition R	L	W	Road Ch	Ci	Trfc Ctl Dv	Op
Unit	**2 :** 1	**Alchl/Drgs:**	0	**Speed:** 50 MPH	**Dir:** N	**Veh Mnvr/Ped Actn:**				1			**Obj Strk:**			
Unit	**3 :** 3	**Alchl/Drgs:**	0	**Speed:** 50 MPH	**Dir:** N	**Veh Mnvr/Ped Actn:**				1			**Obj Strk:**			
Unit	**4 :** 4	**Alchl/Drgs:**	0	**Speed:** 50 MPH	**Dir:** N	**Veh Mnvr/Ped Actn:**				1			**Obj Strk:**			
709	**104776677**	22.755	06/24/2016 14:25	SIDESWIPE, SAME DIRECTION	$ 4000	0	0	0	0	1	1	1	1	0	0	
Unit	**1 :** 4	**Alchl/Drgs:**	0	**Speed:** 30 MPH	**Dir:** W	**Veh Mnvr/Ped Actn:**				16			**Obj Strk:**			
Unit	**2 :** 1	**Alchl/Drgs:**	0	**Speed:** 30 MPH	**Dir:** W	**Veh Mnvr/Ped Actn:**				4			**Obj Strk:**			
710	**105307608**	22.755	11/29/2017 08:37	REAR END, SLOW OR STOP	$ 10000	0	0	0	0	1	1	1	1	0	0	
Unit	**1 :** 1	**Alchl/Drgs:**	0	**Speed:** 45 MPH	**Dir:** W	**Veh Mnvr/Ped Actn:**				4			**Obj Strk:**			
Unit	**2 :** 4	**Alchl/Drgs:**	0	**Speed:** 35 MPH	**Dir:** W	**Veh Mnvr/Ped Actn:**				11			**Obj Strk:**			
711	**105353736**	22.755	01/15/2018 18:02	REAR END, SLOW OR STOP	$ 1200	0	0	0	0	1	5	1	1	0	0	
Unit	**1 :** 1	**Alchl/Drgs:**	0	**Speed:** 50 MPH	**Dir:** W	**Veh Mnvr/Ped Actn:**				4			**Obj Strk:**			
Unit	**2 :** 4	**Alchl/Drgs:**	0	**Speed:** 45 MPH	**Dir:** W	**Veh Mnvr/Ped Actn:**				11			**Obj Strk:**			
712	**105442742**	22.755	04/11/2018 08:29	REAR END, SLOW OR STOP	$ 2100	0	0	0	0	1	1	1	1	0	0	
Unit	**1 :** 1	**Alchl/Drgs:**	0	**Speed:** 55 MPH	**Dir:** N	**Veh Mnvr/Ped Actn:**				4			**Obj Strk:**			
Unit	**2 :** 1	**Alchl/Drgs:**	0	**Speed:** 50 MPH	**Dir:** N	**Veh Mnvr/Ped Actn:**				1			**Obj Strk:**			
713	**105464321**	22.755	04/29/2018 22:02	REAR END, SLOW OR STOP	$ 2000	0	0	0	0	1	5	1	1	0	0	
Unit	**1 :** 1	**Alchl/Drgs:**	0	**Speed:** 25 MPH	**Dir:** W	**Veh Mnvr/Ped Actn:**				4			**Obj Strk:**			
Unit	**2 :** 1	**Alchl/Drgs:**	0	**Speed:** 20 MPH	**Dir:** W	**Veh Mnvr/Ped Actn:**				11			**Obj Strk:**			
714	**104830263**	22.757	08/19/2016 17:30	REAR END, SLOW OR STOP	$ 12500	0	0	0	0	2	1	2	3	0	0	
Unit	**1 :** 1	**Alchl/Drgs:**	0	**Speed:** 35 MPH	**Dir:** E	**Veh Mnvr/Ped Actn:**				4			**Obj Strk:**			
Unit	**2 :** 1	**Alchl/Drgs:**	0	**Speed:** 35 MPH	**Dir:** E	**Veh Mnvr/Ped Actn:**				4			**Obj Strk:**			
715	**104993882**	22.758	01/31/2017 12:44	SIDESWIPE, SAME DIRECTION	$ 1000	0	0	0	1	1	1	1	1	0	0	
Unit	**1 :** 32	**Alchl/Drgs:**	7	**Speed:** 60 MPH	**Dir:** W	**Veh Mnvr/Ped Actn:**				5			**Obj Strk:**			
Unit	**2 :** 1	**Alchl/Drgs:**	0	**Speed:** 60 MPH	**Dir:** W	**Veh Mnvr/Ped Actn:**				4			**Obj Strk:**			
716	**105000750**	22.758	01/31/2017 12:45	REAR END, SLOW OR STOP	$ 25000	0	0	0	1	1	1	1	1	0	0	
Unit	**1 :** 12	**Alchl/Drgs:**	0	**Speed:** 60 MPH	**Dir:** W	**Veh Mnvr/Ped Actn:**				4			**Obj Strk:**			
Unit	**2 :** 1	**Alchl/Drgs:**	0	**Speed:** 45 MPH	**Dir:** W	**Veh Mnvr/Ped Actn:**				16			**Obj Strk:**			

All data presented in this report comes explicitly from the Traffic Engineering Accident Analysis System based upon va criteria provided by the report's creator. The onus is strictly upon the user of this report to exercise due diligence in in and further representing this data.

DocuSign Envelope ID: 5C03745C-4B01-4834-A65D-B77F558A4F46

North Carolina Department of Transportation
Traffic Engineering Accident Analysis System
Strip Analysis Report

Acc No	Crash ID	Milepost	Date	Accident Type	Total Damage	Injuries F	A	B	C	Condition R	L	W	Road Ch	Ci	Trfc Ctl Dv	Op
717	**105583029**	22.758	08/22/2018 18:15	REAR END, SLOW OR STOP	$ 5500	0	0	0	0	1	1	1	1	0	0	
Unit	**1 :** 12	**Alchl/Drgs:** 0	**Speed:** 25 MPH	**Dir:** W	**Veh Mnvr/Ped Actn:** 4	**Obj Strk:**										
Unit	**2 :** 1	**Alchl/Drgs:** 0	**Speed:** 0 MPH	**Dir:** W	**Veh Mnvr/Ped Actn:** 1	**Obj Strk:**										
718	**104417087**	22.762	06/25/2015 20:05	MOVABLE OBJECT	$ 1000	0	0	0	0	1	2	1	1	0	0	
Unit	**1 :** 10	**Alchl/Drgs:** 0	**Speed:** 60 MPH	**Dir:** S	**Veh Mnvr/Ped Actn:** 4	**Obj Strk:**										
Unit	**2 :** 1	**Alchl/Drgs:** 0	**Speed:** 60 MPH	**Dir:** S	**Veh Mnvr/Ped Actn:** 4	**Obj Strk:** 18										
719	**104461382**	22.762	08/14/2015 15:44	REAR END, SLOW OR STOP	$ 1800	0	0	0	1	1	1	2	1	0	0	
Unit	**1 :** 1	**Alchl/Drgs:** 0	**Speed:** 55 MPH	**Dir:** S	**Veh Mnvr/Ped Actn:** 4	**Obj Strk:**										
Unit	**2 :** 1	**Alchl/Drgs:** 0	**Speed:** 60 MPH	**Dir:** S	**Veh Mnvr/Ped Actn:** 1	**Obj Strk:**										
720	**104549841**	22.762	11/09/2015 17:00	REAR END, SLOW OR STOP	$ 2300	0	0	0	0	2	1	2	1	0	0	
Unit	**1 :** 2	**Alchl/Drgs:** 0	**Speed:** 45 MPH	**Dir:** E	**Veh Mnvr/Ped Actn:** 4	**Obj Strk:**										
Unit	**2 :** 1	**Alchl/Drgs:** 0	**Speed:** 45 MPH	**Dir:** E	**Veh Mnvr/Ped Actn:** 11	**Obj Strk:**										
Unit	**3 :** 4	**Alchl/Drgs:** 0	**Speed:** 45 MPH	**Dir:** E	**Veh Mnvr/Ped Actn:** 11	**Obj Strk:**										
721	**104837488**	22.762	09/02/2016 06:17	FIXED OBJECT	$ 4000	0	0	0	1	1	5	1	1	0	0	
Unit	**1 :** 1	**Alchl/Drgs:** 0	**Speed:** 60 MPH	**Dir:** S	**Veh Mnvr/Ped Actn:** 4	**Obj Strk:** 59										
722	**104837481**	22.762	09/02/2016 09:32	MOVABLE OBJECT	$ 250	0	0	0	0	1	1	2	1	0	0	
Unit	**1 :** 10	**Alchl/Drgs:** 0	**Speed:** 60 MPH	**Dir:** N	**Veh Mnvr/Ped Actn:** 4	**Obj Strk:**										
Unit	**2 :** 1	**Alchl/Drgs:** 0	**Speed:** 60 MPH	**Dir:** N	**Veh Mnvr/Ped Actn:** 4	**Obj Strk:** 18										
723	**105019534**	22.762	02/26/2017 10:28	SIDESWIPE, SAME DIRECTION	$ 2000	0	0	0	0	1	1	1	1	0	0	
Unit	**1 :** 2	**Alchl/Drgs:** 7	**Speed:** 60 MPH	**Dir:** S	**Veh Mnvr/Ped Actn:** 4	**Obj Strk:**										
Unit	**2 :** 1	**Alchl/Drgs:** 0	**Speed:** 60 MPH	**Dir:** S	**Veh Mnvr/Ped Actn:** 4	**Obj Strk:**										
724	**105058838**	22.762	04/04/2017 07:12	REAR END, SLOW OR STOP	$ 1900	0	0	0	0	1	1	1	1	0	0	
Unit	**1 :** 14	**Alchl/Drgs:** 0	**Speed:** 50 MPH	**Dir:** S	**Veh Mnvr/Ped Actn:** 4	**Obj Strk:**										
Unit	**2 :** 1	**Alchl/Drgs:** 0	**Speed:** 50 MPH	**Dir:** S	**Veh Mnvr/Ped Actn:** 11	**Obj Strk:**										
725	**105090860**	22.762	05/06/2017 09:13	FIXED OBJECT	$ 1000	0	0	0	0	1	1	1	1	0	0	
Unit	**1 :** 1	**Alchl/Drgs:** 7	**Speed:** 55 MPH	**Dir:** S	**Veh Mnvr/Ped Actn:** 4	**Obj Strk:** 58										

DocuSign Envelope ID: 5C03745C-4B01-4834-A65D-B77F558A4F46

North Carolina Department of Transportation
Traffic Engineering Accident Analysis System
Strip Analysis Report

Acc No	Crash ID	Milepost	Date	Accident Type	Total Damage	Injuries F	A	B	C	Condition R	L	W	Road Ch	Ci	Trfc Ctl Dv	Op
726	**105125889**	22.762	06/07/2017 16:54	REAR END, SLOW OR STOP	$ 4000	0	0	0	0	1	1	1	1	0	0	
Unit	**1 :** 2	**Alchl/Drgs:** 0	**Speed:** 45 MPH	**Dir:** E	**Veh Mnvr/Ped Actn:** 4	**Obj Strk:**										
Unit	**2 :** 4	**Alchl/Drgs:** 0	**Speed:** 35 MPH	**Dir:** E	**Veh Mnvr/Ped Actn:** 11	**Obj Strk:**										
727	**105166638**	22.762	07/19/2017 13:30	SIDESWIPE, SAME DIRECTION	$ 1300	0	0	0	0	1	1	1	1	0	0	
Unit	**1 :** 4	**Alchl/Drgs:** 7	**Speed:** 60 MPH	**Dir:** N	**Veh Mnvr/Ped Actn:** 5	**Obj Strk:**										
Unit	**2 :** 1	**Alchl/Drgs:** 0	**Speed:** 60 MPH	**Dir:** N	**Veh Mnvr/Ped Actn:** 4	**Obj Strk:**										
728	**105293192**	22.762	11/17/2017 07:51	REAR END, SLOW OR STOP	$ 6000	0	0	0	1	1	1	1	1	0	0	
Unit	**1 :** 4	**Alchl/Drgs:** 0	**Speed:** 60 MPH	**Dir:** N	**Veh Mnvr/Ped Actn:** 4	**Obj Strk:**										
Unit	**2 :** 2	**Alchl/Drgs:** 0	**Speed:** 60 MPH	**Dir:** N	**Veh Mnvr/Ped Actn:** 11	**Obj Strk:**										
729	**105406767**	22.762	03/09/2018 15:22	REAR END, SLOW OR STOP	$ 2000	0	0	0	0	1	1	1	1	0	0	
Unit	**1 :** 1	**Alchl/Drgs:** 0	**Speed:** 35 MPH	**Dir:** W	**Veh Mnvr/Ped Actn:** 4	**Obj Strk:**										
Unit	**2 :** 1	**Alchl/Drgs:** 0	**Speed:** 0 MPH	**Dir:** W	**Veh Mnvr/Ped Actn:** 1	**Obj Strk:**										
730	**105435702**	22.762	04/04/2018 17:48	JACKKNIFE	$ 0	0	0	0	0	1	1	1	1	0	0	
Unit	**1 :** 12	**Alchl/Drgs:** 0	**Speed:** 60 MPH	**Dir:** E	**Veh Mnvr/Ped Actn:** 4	**Obj Strk:**										
731	**105502079**	22.762	06/04/2018 17:20	REAR END, SLOW OR STOP	$ 5000	0	0	0	0	1	1	1	1	0	0	
Unit	**1 :** 4	**Alchl/Drgs:** 0	**Speed:** 30 MPH	**Dir:** E	**Veh Mnvr/Ped Actn:** 4	**Obj Strk:**										
Unit	**2 :** 4	**Alchl/Drgs:** 0	**Speed:** 20 MPH	**Dir:** E	**Veh Mnvr/Ped Actn:** 11	**Obj Strk:**										
732	**105534386**	22.762	07/08/2018 12:18	REAR END, SLOW OR STOP	$ 1800	0	0	0	0	1	1	1	1	0	0	
Unit	**1 :** 4	**Alchl/Drgs:** 0	**Speed:** 50 MPH	**Dir:** N	**Veh Mnvr/Ped Actn:** 4	**Obj Strk:**										
Unit	**2 :** 1	**Alchl/Drgs:** 0	**Speed:** 50 MPH	**Dir:** N	**Veh Mnvr/Ped Actn:** 11	**Obj Strk:**										
733	**105711294**	22.762	12/14/2018 15:31	REAR END, SLOW OR STOP	$ 2100	0	0	0	0	2	1	2	1	0	0	
Unit	**1 :** 1	**Alchl/Drgs:** 0	**Speed:** 50 MPH	**Dir:** S	**Veh Mnvr/Ped Actn:** 4	**Obj Strk:**										
Unit	**2 :** 4	**Alchl/Drgs:** 0	**Speed:** 50 MPH	**Dir:** S	**Veh Mnvr/Ped Actn:** 1	**Obj Strk:**										
734	**104101759**	22.763	07/11/2014 11:18	REAR END, SLOW OR STOP	$ 1000	0	0	0	0	1	1	1	1	0	0	
Unit	**1 :** 4	**Alchl/Drgs:** 0	**Speed:** 15 MPH	**Dir:** E	**Veh Mnvr/Ped Actn:** 1	**Obj Strk:**										
Unit	**2 :** 1	**Alchl/Drgs:** 0	**Speed:** 15 MPH	**Dir:** E	**Veh Mnvr/Ped Actn:** 4	**Obj Strk:**										

DocuSign Envelope ID: 5C03745C-4B01-4834-A65D-B77F558A4F46

North Carolina Department of Transportation
Traffic Engineering Accident Analysis System
Strip Analysis Report

Acc No	Crash ID	Milepost	Date	Accident Type	Total Damage	Injuries F	A	B	C	Condition R	L	W	Road Ch	Ci	Trfc Ctl Dv	Op
735	**104280593**	22.763	01/28/2015 08:34	REAR END, SLOW OR STOP	$ 7500	0	0	2	1	1	1	1	1	0	0	
Unit	**1 :** 1	**Alchl/Drgs:** 0	**Speed:** 60 MPH	**Dir:** N	**Veh Mnvr/Ped Actn:** 4	**Obj Strk:**										
Unit	**2 :** 4	**Alchl/Drgs:** 0	**Speed:** 60 MPH	**Dir:** N	**Veh Mnvr/Ped Actn:** 11	**Obj Strk:**										
736	**104382381**	22.763	05/14/2015 12:37	SIDESWIPE, SAME DIRECTION	$ 1000	0	0	0	0	1	1	1	1	0	0	
Unit	**1 :** 32	**Alchl/Drgs:** 7	**Speed:** 65 MPH	**Dir:** W	**Veh Mnvr/Ped Actn:** 6	**Obj Strk:**										
Unit	**2 :** 1	**Alchl/Drgs:** 0	**Speed:** 60 MPH	**Dir:** W	**Veh Mnvr/Ped Actn:** 4	**Obj Strk:**										
737	**104396629**	22.763	05/30/2015 14:16	REAR END, SLOW OR STOP	$ 4000	0	0	0	0	1	1	1	1	0	0	
Unit	**1 :** 1	**Alchl/Drgs:** 0	**Speed:** 25 MPH	**Dir:** W	**Veh Mnvr/Ped Actn:** 4	**Obj Strk:**										
Unit	**2 :** 4	**Alchl/Drgs:** 0	**Speed:** 0 MPH	**Dir:** W	**Veh Mnvr/Ped Actn:** 1	**Obj Strk:**										
738	**104522722**	22.763	10/17/2015 09:50	REAR END, SLOW OR STOP	$ 4800	0	0	0	1	1	1	1	1	0	0	
Unit	**1 :** 1	**Alchl/Drgs:** 0	**Speed:** 50 MPH	**Dir:** W	**Veh Mnvr/Ped Actn:** 4	**Obj Strk:**										
Unit	**2 :** 1	**Alchl/Drgs:** 0	**Speed:** 50 MPH	**Dir:** W	**Veh Mnvr/Ped Actn:** 1	**Obj Strk:**										
739	**104526658**	22.763	10/17/2015 09:51	REAR END, SLOW OR STOP	$ 14800	0	0	0	0	1	1	1	1	0	0	
Unit	**1 :** 1	**Alchl/Drgs:** 0	**Speed:** 50 MPH	**Dir:** W	**Veh Mnvr/Ped Actn:** 4	**Obj Strk:**										
Unit	**2 :** 1	**Alchl/Drgs:** 0	**Speed:** 50 MPH	**Dir:** W	**Veh Mnvr/Ped Actn:** 11	**Obj Strk:**										
Unit	**3 :** 1	**Alchl/Drgs:** 0	**Speed:** 0 MPH	**Dir:** W	**Veh Mnvr/Ped Actn:** 1	**Obj Strk:**										
Unit	**4 :** 1	**Alchl/Drgs:** 0	**Speed:** 0 MPH	**Dir:** W	**Veh Mnvr/Ped Actn:** 1	**Obj Strk:**										
740	**104593038**	22.763	12/21/2015 10:45	SIDESWIPE, SAME DIRECTION	$ 600	0	0	0	0	1	1	2	1	0	0	
Unit	**1 :** 4	**Alchl/Drgs:** 7	**Speed:** 60 MPH	**Dir:** S	**Veh Mnvr/Ped Actn:** 5	**Obj Strk:**										
Unit	**2 :** 4	**Alchl/Drgs:** 0	**Speed:** 60 MPH	**Dir:** S	**Veh Mnvr/Ped Actn:** 4	**Obj Strk:**										
741	**104653784**	22.763	02/21/2016 15:44	REAR END, SLOW OR STOP	$ 1500	0	0	0	0	2	1	2	1	0	0	
Unit	**1 :** 2	**Alchl/Drgs:** 0	**Speed:** 30 MPH	**Dir:** E	**Veh Mnvr/Ped Actn:** 4	**Obj Strk:**										
Unit	**2 :** 4	**Alchl/Drgs:** 0	**Speed:** 30 MPH	**Dir:** E	**Veh Mnvr/Ped Actn:** 11	**Obj Strk:**										
742	**104731042**	22.763	05/12/2016 16:21	OTHER COLLISION WITH VEHICLE	$ 3000	0	0	0	0	1	1	1	1	0	0	
Unit	**1 :** 1	**Alchl/Drgs:** 0	**Speed:** 40 MPH	**Dir:** W	**Veh Mnvr/Ped Actn:** 5	**Obj Strk:**										
Unit	**2 :** 2	**Alchl/Drgs:** 7	**Speed:** 45 MPH	**Dir:** W	**Veh Mnvr/Ped Actn:** 5	**Obj Strk:**										
743	**105147924**	22.763	06/27/2017 17:20	SIDESWIPE, SAME DIRECTION	$ 2200	0	0	0	0	1	1	1	1	0	0	
Unit	**1 :** 11	**Alchl/Drgs:** 0	**Speed:** 60 MPH	**Dir:** W	**Veh Mnvr/Ped Actn:** 5	**Obj Strk:**										
Unit	**2 :** 1	**Alchl/Drgs:** 0	**Speed:** 60 MPH	**Dir:** W	**Veh Mnvr/Ped Actn:** 4	**Obj Strk:**										

DocuSign Envelope ID: 5C03745C-4B01-4834-A65D-B77F558A4F46

North Carolina Department of Transportation
Traffic Engineering Accident Analysis System
Strip Analysis Report

Acc No	Crash ID	Milepost	Date	Accident Type	Total Damage	Injuries F	A	B	C	Condition R	L	W	Road Ch	Ci	Trfc Ctl Dv	Op
744	**105389846**	22.763	02/22/2018 07:27	MOVABLE OBJECT	$ 2000	0	0	0	0	1	3	1	1	0	0	
Unit	**1 :** 2	**Alchl/Drgs:** 0	**Speed:** 60 MPH	**Dir:** E	**Veh Mnvr/Ped Actn:** 4	**Obj Strk:** 18										
745	**105520510**	22.763	06/22/2018 13:57	REAR END, SLOW OR STOP	$ 6800	0	0	2	0	1	1	1	1	0	0	
Unit	**1 :** 20	**Alchl/Drgs:** 0	**Speed:** 50 MPH	**Dir:** S	**Veh Mnvr/Ped Actn:** 4	**Obj Strk:**										
Unit	**2 :** 4	**Alchl/Drgs:** 0	**Speed:** 50 MPH	**Dir:** S	**Veh Mnvr/Ped Actn:** 1	**Obj Strk:**										
746	**105658531**	22.763	11/01/2018 07:35	REAR END, SLOW OR STOP	$ 1200	0	0	0	0	1	1	1	1	0	0	
Unit	**1 :** 1	**Alchl/Drgs:** 0	**Speed:** 60 MPH	**Dir:** E	**Veh Mnvr/Ped Actn:** 4	**Obj Strk:**										
Unit	**2 :** 1	**Alchl/Drgs:** 0	**Speed:** 45 MPH	**Dir:** E	**Veh Mnvr/Ped Actn:** 11	**Obj Strk:**										
747	**104396935**	22.810	06/04/2015 16:47	REAR END, SLOW OR STOP	$ 700	0	0	0	0	1	1	1	1	0	0	
Unit	**1 :** 1	**Alchl/Drgs:** 0	**Speed:** 60 MPH	**Dir:** E	**Veh Mnvr/Ped Actn:** 11	**Obj Strk:**										
Unit	**2 :** 1	**Alchl/Drgs:** 0	**Speed:** 60 MPH	**Dir:** E	**Veh Mnvr/Ped Actn:** 11	**Obj Strk:**										
748	**104664273**	22.810	03/02/2016 09:27	SIDESWIPE, SAME DIRECTION	$ 1000	0	0	0	0	1	1	1	1	0	0	
Unit	**1 :** 10	**Alchl/Drgs:** 0	**Speed:** 60 MPH	**Dir:** W	**Veh Mnvr/Ped Actn:** 4	**Obj Strk:**										
Unit	**2 :** 32	**Alchl/Drgs:** 7	**Speed:** 65 MPH	**Dir:** W	**Veh Mnvr/Ped Actn:** 4	**Obj Strk:**										
749	**104679805**	22.810	03/17/2016 16:25	REAR END, SLOW OR STOP	$ 100	0	0	0	0	1	1	1	3	0	0	
Unit	**1 :** 5	**Alchl/Drgs:** 0	**Speed:** 20 MPH	**Dir:** N	**Veh Mnvr/Ped Actn:** 4	**Obj Strk:**										
Unit	**2 :** 1	**Alchl/Drgs:** 0	**Speed:** 0 MPH	**Dir:** N	**Veh Mnvr/Ped Actn:** 1	**Obj Strk:**										
750	**105423221**	22.810	03/23/2018 17:17	SIDESWIPE, SAME DIRECTION	$ 3000	0	0	0	0	1	1	1	1	0	0	
Unit	**1 :** 1	**Alchl/Drgs:** 0	**Speed:** 50 MPH	**Dir:** E	**Veh Mnvr/Ped Actn:** 11	**Obj Strk:**										
Unit	**2 :** 4	**Alchl/Drgs:** 0	**Speed:** 50 MPH	**Dir:** E	**Veh Mnvr/Ped Actn:** 11	**Obj Strk:**										
751	**104781097**	22.830	07/04/2016 19:16	REAR END, SLOW OR STOP	$ 4500	0	0	0	0	1	1	1	3	0	0	
Unit	**1 :** 1	**Alchl/Drgs:** 0	**Speed:** 60 MPH	**Dir:** E	**Veh Mnvr/Ped Actn:** 4	**Obj Strk:**										
Unit	**2 :** 4	**Alchl/Drgs:** 0	**Speed:** 60 MPH	**Dir:** E	**Veh Mnvr/Ped Actn:** 11	**Obj Strk:**										
752	**105661589**	22.855	11/04/2018 13:56	REAR END, SLOW OR STOP	$ 12500	0	0	0	0	1	1	1	1	0	0	
Unit	**1 :** 2	**Alchl/Drgs:** 0	**Speed:** 45 MPH	**Dir:** W	**Veh Mnvr/Ped Actn:** 4	**Obj Strk:**										
Unit	**2 :** 2	**Alchl/Drgs:** 0	**Speed:** 45 MPH	**Dir:** W	**Veh Mnvr/Ped Actn:** 11	**Obj Strk:**										

DocuSign Envelope ID: 5C03745C-4B01-4834-A65D-B77F558A4F46

North Carolina Department of Transportation
Traffic Engineering Accident Analysis System
Strip Analysis Report

Acc No	Crash ID	Milepost	Date	Accident Type	Total Damage	Injuries F	A	B	C	Condition R	L	W	Road Ch	Ci	Trfc Ctl Dv	Op
753	**104873196**	22.858	10/06/2016 14:31	FIXED OBJECT	$ 2500	0	0	0	0	1	1	1	1	0	0	
Unit	**1 :** 1	**Alchl/Drgs:** 0	**Speed:** 60 MPH	**Dir:** E	**Veh Mnvr/Ped Actn:** 4	**Obj Strk:** 42										
754	**104101625**	22.863	07/11/2014 11:06	REAR END, SLOW OR STOP	$ 4500	0	0	0	0	1	1	1	1	0	0	
Unit	**1 :** 4	**Alchl/Drgs:** 0	**Speed:** 45 MPH	**Dir:** S	**Veh Mnvr/Ped Actn:** 4	**Obj Strk:**										
Unit	**2 :** 1	**Alchl/Drgs:** 0	**Speed:** 25 MPH	**Dir:** S	**Veh Mnvr/Ped Actn:** 1	**Obj Strk:**										
755	**104789902**	22.863	07/12/2016 12:17	REAR END, SLOW OR STOP	$ 1100	0	0	0	0	1	1	1	1	0	0	
Unit	**1 :** 4	**Alchl/Drgs:** 0	**Speed:** 60 MPH	**Dir:** N	**Veh Mnvr/Ped Actn:** 11	**Obj Strk:**										
Unit	**2 :** 1	**Alchl/Drgs:** 0	**Speed:** 60 MPH	**Dir:** N	**Veh Mnvr/Ped Actn:** 1	**Obj Strk:**										
756	**105090495**	22.863	05/04/2017 16:47	REAR END, SLOW OR STOP	$ 1100	0	0	0	0	2	1	2	1	0	0	
Unit	**1 :** 14	**Alchl/Drgs:** 0	**Speed:** 45 MPH	**Dir:** S	**Veh Mnvr/Ped Actn:** 4	**Obj Strk:**										
Unit	**2 :** 4	**Alchl/Drgs:** 0	**Speed:** 45 MPH	**Dir:** S	**Veh Mnvr/Ped Actn:** 5	**Obj Strk:**										
757	**105307424**	22.863	11/27/2017 17:42	REAR END, SLOW OR STOP	$ 8000	0	0	0	0	1	1	1	1	0	0	
Unit	**1 :** 1	**Alchl/Drgs:** 0	**Speed:** 5 MPH	**Dir:** E	**Veh Mnvr/Ped Actn:** 4	**Obj Strk:**										
Unit	**2 :** 1	**Alchl/Drgs:** 0	**Speed:** 35 MPH	**Dir:** E	**Veh Mnvr/Ped Actn:** 11	**Obj Strk:**										
758	**105360599**	22.863	01/23/2018 07:53	REAR END, SLOW OR STOP	$ 17000	0	0	0	0	2	1	1	1	0	0	
Unit	**1 :** 2	**Alchl/Drgs:** 0	**Speed:** 60 MPH	**Dir:** E	**Veh Mnvr/Ped Actn:** 4	**Obj Strk:**										
Unit	**2 :** 1	**Alchl/Drgs:** 0	**Speed:** 60 MPH	**Dir:** E	**Veh Mnvr/Ped Actn:** 11	**Obj Strk:**										
Unit	**3 :** 1	**Alchl/Drgs:** 0	**Speed:** 60 MPH	**Dir:** E	**Veh Mnvr/Ped Actn:** 1	**Obj Strk:**										
759	**105500015**	22.863	06/04/2018 08:13	REAR END, SLOW OR STOP	$ 2200	0	0	0	0	1	1	1	1	0	0	
Unit	**1 :** 4	**Alchl/Drgs:** 0	**Speed:** 60 MPH	**Dir:** SE	**Veh Mnvr/Ped Actn:** 4	**Obj Strk:**										
Unit	**2 :** 12	**Alchl/Drgs:** 0	**Speed:** 60 MPH	**Dir:** SE	**Veh Mnvr/Ped Actn:** 11	**Obj Strk:**										
760	**104203281**	22.888	11/04/2014 22:00	SIDESWIPE, SAME DIRECTION	$ 5800	0	0	0	1	1	5	1	3	0	0	
Unit	**1 :** 1	**Alchl/Drgs:** 7	**Speed:** 60 MPH	**Dir:** W	**Veh Mnvr/Ped Actn:** 5	**Obj Strk:**										
Unit	**2 :** 1	**Alchl/Drgs:** 0	**Speed:** 60 MPH	**Dir:** W	**Veh Mnvr/Ped Actn:** 4	**Obj Strk:** 44										
761	**104986816**	22.950	12/09/2016 13:33	REAR END, SLOW OR STOP	$ 1700	0	0	0	0	1	1	1	1	0		
Unit	**1 :** 1	**Alchl/Drgs:** 0	**Speed:** 60 MPH	**Dir:** E	**Veh Mnvr/Ped Actn:** 4	**Obj Strk:**										
Unit	**2 :** 4	**Alchl/Drgs:** 0	**Speed:** 60 MPH	**Dir:** E	**Veh Mnvr/Ped Actn:** 11	**Obj Strk:**										

DocuSign Envelope ID: 5C03745C-4B01-4834-A65D-B77F558A4F46

North Carolina Department of Transportation
Traffic Engineering Accident Analysis System
Strip Analysis Report

Acc No	Crash ID	Milepost	Date	Accident Type	Total Damage	Injuries F	A	B	C	Condition R	L	W	Road Ch	Ci	Trfc Ctl Dv	Op
762	**105307428**	22.955	11/27/2017 17:26	ANIMAL	$ 2000	0	0	0	0	1	2	1	1	0	0	
Unit	**1 :** 2	**Alchl/Drgs:** 0	**Speed:** 50 MPH	**Dir:** W	**Veh Mnvr/Ped Actn:** 4	**Obj Strk:** 17										
763	**105667257**	22.958	11/07/2018 20:59	SIDESWIPE, SAME DIRECTION	$ 750	0	0	0	0	1	5	1	1	0	0	
Unit	**1 :** 14	**Alchl/Drgs:** 0	**Speed:** 5 MPH	**Dir:** W	**Veh Mnvr/Ped Actn:** 4	**Obj Strk:**										
Unit	**2 :** 14	**Alchl/Drgs:** 7	**Speed:** 20 MPH	**Dir:** W	**Veh Mnvr/Ped Actn:** 6	**Obj Strk:**										
764	**104942113**	22.963	11/30/2016 17:39	SIDESWIPE, SAME DIRECTION	$ 9000	0	0	0	1	2	5	2	1	0	0	
Unit	**1 :** 4	**Alchl/Drgs:** 0	**Speed:** 50 MPH	**Dir:** E	**Veh Mnvr/Ped Actn:** 5	**Obj Strk:**										
Unit	**2 :** 4	**Alchl/Drgs:** 0	**Speed:** 50 MPH	**Dir:** E	**Veh Mnvr/Ped Actn:** 4	**Obj Strk:**										
765	**104987715**	22.963	01/25/2017 07:35	FIXED OBJECT	$ 4500	0	0	0	0	1	3	1	1	0	0	
Unit	**1 :** 1	**Alchl/Drgs:** 0	**Speed:** 60 MPH	**Dir:** E	**Veh Mnvr/Ped Actn:** 3	**Obj Strk:** 44										
766	**105299927**	22.963	11/21/2017 19:14	REAR END, SLOW OR STOP	$ 16100	0	0	0	0	1	2	1	1	0	0	
Unit	**1 :** 2	**Alchl/Drgs:** 0	**Speed:** 60 MPH	**Dir:** E	**Veh Mnvr/Ped Actn:** 4	**Obj Strk:**										
Unit	**2 :** 1	**Alchl/Drgs:** 0	**Speed:** 60 MPH	**Dir:** E	**Veh Mnvr/Ped Actn:** 1	**Obj Strk:**										
Unit	**3 :** 1	**Alchl/Drgs:** 0	**Speed:** 60 MPH	**Dir:** E	**Veh Mnvr/Ped Actn:** 1	**Obj Strk:**										
Unit	**4 :** 1	**Alchl/Drgs:** 0	**Speed:** 60 MPH	**Dir:** E	**Veh Mnvr/Ped Actn:** 1	**Obj Strk:**										
767	**105300417**	22.963	11/26/2017 14:24	REAR END, SLOW OR STOP	$ 7100	0	0	0	0	1	1	1	1	0	0	
Unit	**1 :** 1	**Alchl/Drgs:** 0	**Speed:** 55 MPH	**Dir:** E	**Veh Mnvr/Ped Actn:** 4	**Obj Strk:**										
Unit	**2 :** 1	**Alchl/Drgs:** 0	**Speed:** 0 MPH	**Dir:** E	**Veh Mnvr/Ped Actn:** 1	**Obj Strk:**										
768	**105400548**	22.963	02/21/2018 07:51	REAR END, SLOW OR STOP	$ 29700	0	0	0	1	2	1	3	3	0	0	
Unit	**1 :** 1	**Alchl/Drgs:** 0	**Speed:** 50 MPH	**Dir:** SE	**Veh Mnvr/Ped Actn:** 4	**Obj Strk:**										
Unit	**2 :** 2	**Alchl/Drgs:** 0	**Speed:** 50 MPH	**Dir:** SE	**Veh Mnvr/Ped Actn:** 4	**Obj Strk:**										
Unit	**3 :** 2	**Alchl/Drgs:** 0	**Speed:** 50 MPH	**Dir:** SE	**Veh Mnvr/Ped Actn:** 4	**Obj Strk:**										
Unit	**4 :** 2	**Alchl/Drgs:** 0	**Speed:** 50 MPH	**Dir:** SE	**Veh Mnvr/Ped Actn:** 1	**Obj Strk:**										
Unit	**5 :** 4	**Alchl/Drgs:** 0	**Speed:** 50 MPH	**Dir:** SE	**Veh Mnvr/Ped Actn:** 1	**Obj Strk:**										
Unit	**6 :** 1	**Alchl/Drgs:** 0	**Speed:** 50 MPH	**Dir:** SE	**Veh Mnvr/Ped Actn:** 1	**Obj Strk:**										
769	**104295050**	23.010	02/13/2015 18:32	REAR END, SLOW OR STOP	$ 3500	0	0	0	0	1	5	1	1	0	0	
Unit	**1 :** 4	**Alchl/Drgs:** 0	**Speed:** 60 MPH	**Dir:** W	**Veh Mnvr/Ped Actn:** 4	**Obj Strk:**										
Unit	**2 :** 1	**Alchl/Drgs:** 0	**Speed:** 60 MPH	**Dir:** W	**Veh Mnvr/Ped Actn:** 1	**Obj Strk:**										
Unit	**3 :** 1	**Alchl/Drgs:** 0	**Speed:** 60 MPH	**Dir:** W	**Veh Mnvr/Ped Actn:** 1	**Obj Strk:**										

DocuSign Envelope ID: 5C03745C-4B01-4834-A65D-B77F558A4F46

North Carolina Department of Transportation
Traffic Engineering Accident Analysis System
Strip Analysis Report

Acc No	Crash ID	Milepost	Date	Accident Type	Total Damage	Injuries F	A	B	C	Condition R	L	W	Road Ch	Ci	Trfc Ctl Dv	Op
770	**104616149**	23.010	01/13/2016 18:19	REAR END, SLOW OR STOP	$ 3200	0	0	0	0	1	5	1	7	0	0	
Unit	**1 :** 5	**Alchl/Drgs:** 0	**Speed:** 60 MPH	**Dir:** E	**Veh Mnvr/Ped Actn:** 11	**Obj Strk:**										
Unit	**2 :** 2	**Alchl/Drgs:** 0	**Speed:** 60 MPH	**Dir:** E	**Veh Mnvr/Ped Actn:** 11	**Obj Strk:**										
771	**104805362**	23.010	07/30/2016 13:16	SIDESWIPE, SAME DIRECTION	$ 1900	0	0	0	0	1	1	1	7	0	0	
Unit	**1 :** 4	**Alchl/Drgs:** 0	**Speed:** 55 MPH	**Dir:** E	**Veh Mnvr/Ped Actn:** 5	**Obj Strk:**										
Unit	**2 :** 1	**Alchl/Drgs:** 0	**Speed:** 55 MPH	**Dir:** E	**Veh Mnvr/Ped Actn:** 4	**Obj Strk:**										
772	**104866076**	23.010	09/30/2016 13:56	REAR END, SLOW OR STOP	$ 2000	0	0	0	0	1	1	1	1	0	0	
Unit	**1 :** 4	**Alchl/Drgs:** 0	**Speed:** 60 MPH	**Dir:** W	**Veh Mnvr/Ped Actn:** 11	**Obj Strk:**										
Unit	**2 :** 4	**Alchl/Drgs:** 0	**Speed:** 60 MPH	**Dir:** W	**Veh Mnvr/Ped Actn:** 1	**Obj Strk:**										
773	**104873554**	23.010	10/08/2016 02:10	FIXED OBJECT	$ 3500	0	0	0	0	2	5	3	7	0	0	
Unit	**1 :** 1	**Alchl/Drgs:** 0	**Speed:** 60 MPH	**Dir:** E	**Veh Mnvr/Ped Actn:** 4	**Obj Strk:** 59										
774	**104865853**	23.038	09/29/2016 11:11	RAN OFF ROAD - RIGHT	$ 1700	0	0	0	0	1	1	1	1	0	0	
Unit	**1 :** 14	**Alchl/Drgs:** 0	**Speed:** 60 MPH	**Dir:** W	**Veh Mnvr/Ped Actn:** 4	**Obj Strk:** 20										
Unit	**2 :** 1	**Alchl/Drgs:** 7	**Speed:** 0 MPH	**Dir:** W	**Veh Mnvr/Ped Actn:** 2	**Obj Strk:** 20										
775	**105541575**	23.038	07/14/2018 17:48	OTHER COLLISION WITH VEHICLE	$ 2200	0	0	1	0	1	1	1	3	0	0	
Unit	**1 :** 20	**Alchl/Drgs:** 0	**Speed:** 25 MPH	**Dir:** W	**Veh Mnvr/Ped Actn:** 4	**Obj Strk:**										
Unit	**2 :** 1	**Alchl/Drgs:** 0	**Speed:** 25 MPH	**Dir:** W	**Veh Mnvr/Ped Actn:** 4	**Obj Strk:**										
776	**104492418**	23.063	09/18/2015 12:50	REAR END, SLOW OR STOP	$ 1600	0	0	0	1	1	1	1	7	0	0	
Unit	**1 :** 1	**Alchl/Drgs:** 0	**Speed:** 65 MPH	**Dir:** N	**Veh Mnvr/Ped Actn:** 4	**Obj Strk:**										
Unit	**2 :** 1	**Alchl/Drgs:** 0	**Speed:** 55 MPH	**Dir:** N	**Veh Mnvr/Ped Actn:** 4	**Obj Strk:**										
777	**105059014**	23.063	04/04/2017 20:26	REAR END, SLOW OR STOP	$ 9000	0	0	0	3	1	5	1	7	0	0	
Unit	**1 :** 1	**Alchl/Drgs:** 1	**Speed:** 55 MPH	**Dir:** N	**Veh Mnvr/Ped Actn:** 4	**Obj Strk:**										
Unit	**2 :** 1	**Alchl/Drgs:** 0	**Speed:** 45 MPH	**Dir:** N	**Veh Mnvr/Ped Actn:** 1	**Obj Strk:**										
Unit	**3 :** 2	**Alchl/Drgs:** 0	**Speed:** 0 MPH	**Dir:** N	**Veh Mnvr/Ped Actn:** 1	**Obj Strk:**										
778	**104307443**	23.110	02/26/2015 23:12	FIXED OBJECT	$ 5000	0	0	0	0	2	5	1	3	0	0	
Unit	**1 :** 1	**Alchl/Drgs:** 1	**Speed:** 60 MPH	**Dir:** E	**Veh Mnvr/Ped Actn:** 4	**Obj Strk:** 59										

DocuSign Envelope ID: 5C03745C-4B01-4834-A65D-B77F558A4F46

North Carolina Department of Transportation
Traffic Engineering Accident Analysis System
Strip Analysis Report

Acc No	Crash ID	Milepost	Date	Accident Type	Total Damage	Injuries F	A	B	C	Condition R	L	W	Road Ch	Ci	Trfc Ctl Dv	Op
779	**105246169**	23.110	10/08/2017 18:05	FIXED OBJECT	$ 10000	0	0	0	1	2	1	3	7	0	0	
Unit	**1 :** 1	**Alchl/Drgs:** 0	**Speed:** 60 MPH	**Dir:** W	**Veh Mnvr/Ped Actn:** 4	**Obj Strk:** 59										
780	**104022694**	23.138	03/16/2014 11:20	FIXED OBJECT	$ 1500	0	0	0	0	2	1	3	1	0	0	
Unit	**1 :** 1	**Alchl/Drgs:** 0	**Speed:** 60 MPH	**Dir:** W	**Veh Mnvr/Ped Actn:** 4	**Obj Strk:** 42										
781	**104128350**	23.138	08/17/2014 15:05	FIXED OBJECT	$ 4700	0	0	0	0	1	1	1	1	0	0	
Unit	**1 :** 4	**Alchl/Drgs:** 0	**Speed:** 55 MPH	**Dir:** NW	**Veh Mnvr/Ped Actn:** 4	**Obj Strk:** 44										
782	**104323308**	23.138	03/13/2015 17:50	REAR END, SLOW OR STOP	$ 2200	0	0	0	0	2	1	3	3	0	0	
Unit	**1 :** 1	**Alchl/Drgs:** 0	**Speed:** 40 MPH	**Dir:** S	**Veh Mnvr/Ped Actn:** 4	**Obj Strk:**										
Unit	**2 :** 1	**Alchl/Drgs:** 0	**Speed:** 40 MPH	**Dir:** S	**Veh Mnvr/Ped Actn:** 11	**Obj Strk:**										
783	**104359097**	23.138	04/16/2015 07:35	REAR END, SLOW OR STOP	$ 2000	0	0	0	0	1	1	1	1	0	0	
Unit	**1 :** 4	**Alchl/Drgs:** 0	**Speed:** 65 MPH	**Dir:** W	**Veh Mnvr/Ped Actn:** 4	**Obj Strk:**										
Unit	**2 :** 2	**Alchl/Drgs:** 0	**Speed:** 40 MPH	**Dir:** W	**Veh Mnvr/Ped Actn:** 11	**Obj Strk:**										
784	**104725986**	23.138	05/06/2016 04:05	MOVABLE OBJECT	$ 400	0	0	0	0	1	5	1	7	0	0	
Unit	**1 :** 5	**Alchl/Drgs:** 0	**Speed:** 60 MPH	**Dir:** W	**Veh Mnvr/Ped Actn:** 4	**Obj Strk:** 18										
785	**105243036**	23.138	10/01/2017 15:31	REAR END, SLOW OR STOP	$ 2000	0	0	0	0	1	1	1	1	0	0	
Unit	**1 :** 2	**Alchl/Drgs:** 0	**Speed:** 20 MPH	**Dir:** W	**Veh Mnvr/Ped Actn:** 4	**Obj Strk:**										
Unit	**2 :** 4	**Alchl/Drgs:** 0	**Speed:** 20 MPH	**Dir:** W	**Veh Mnvr/Ped Actn:** 11	**Obj Strk:**										
786	**105253383**	23.138	10/14/2017 16:12	REAR END, SLOW OR STOP	$ 3000	0	0	0	0	1	1	1	1	0	0	
Unit	**1 :** 4	**Alchl/Drgs:** 0	**Speed:** 50 MPH	**Dir:** W	**Veh Mnvr/Ped Actn:** 1	**Obj Strk:**										
Unit	**2 :** 4	**Alchl/Drgs:** 0	**Speed:** 50 MPH	**Dir:** W	**Veh Mnvr/Ped Actn:** 4	**Obj Strk:**										
787	**105338078**	23.138	12/16/2017 09:51	SIDESWIPE, SAME DIRECTION	$ 3800	0	0	0	0	1	1	1	1	0		2
Unit	**1 :** 4	**Alchl/Drgs:** 0	**Speed:** 5 MPH	**Dir:** W	**Veh Mnvr/Ped Actn:** 5	**Obj Strk:**										
Unit	**2 :** 1	**Alchl/Drgs:** 0	**Speed:** 50 MPH	**Dir:** W	**Veh Mnvr/Ped Actn:** 4	**Obj Strk:**										
788	**105666375**	23.138	10/22/2018 09:03	REAR END, SLOW OR STOP	$ 4000	0	0	0	1	1	1	1	1	0	0	2
Unit	**1 :** 1	**Alchl/Drgs:** 0	**Speed:** 40 MPH	**Dir:** W	**Veh Mnvr/Ped Actn:** 4	**Obj Strk:**										
Unit	**2 :** 1	**Alchl/Drgs:** 0	**Speed:** 40 MPH	**Dir:** W	**Veh Mnvr/Ped Actn:** 11	**Obj Strk:**										

DocuSign Envelope ID: 5C03745C-4B01-4834-A65D-B77F558A4F46

North Carolina Department of Transportation
Traffic Engineering Accident Analysis System
Strip Analysis Report

Acc No	Crash ID	Milepost	Date	Accident Type	Total Damage	Injuries F	A	B	C	Condition R	L	W	Road Ch	Ci	Trfc Ctl Dv	Op
789	**105211995**	23.155	09/06/2017 07:48	REAR END, SLOW OR STOP	$ 7900	0	0	0	0	2	1	3	1	0	0	
Unit	**1 :** 1	**Alchl/Drgs:** 0	**Speed:** 60 MPH	**Dir:** E	**Veh Mnvr/Ped Actn:** 4	**Obj Strk:**										
Unit	**2 :** 1	**Alchl/Drgs:** 0	**Speed:** 20 MPH	**Dir:** E	**Veh Mnvr/Ped Actn:** 11	**Obj Strk:**										
790	**105466740**	23.155	05/02/2018 18:36	REAR END, SLOW OR STOP	$ 10000	0	0	0	0	1	1	1	1	0	0	
Unit	**1 :** 1	**Alchl/Drgs:** 0	**Speed:** 60 MPH	**Dir:** E	**Veh Mnvr/Ped Actn:** 4	**Obj Strk:**										
Unit	**2 :** 1	**Alchl/Drgs:** 0	**Speed:** 60 MPH	**Dir:** E	**Veh Mnvr/Ped Actn:** 11	**Obj Strk:**										
791	**105662053**	23.155	11/03/2018 13:23	REAR END, SLOW OR STOP	$ 4500	0	0	0	0	1	1	1	1	0	0	
Unit	**1 :** 1	**Alchl/Drgs:** 0	**Speed:** 60 MPH	**Dir:** W	**Veh Mnvr/Ped Actn:** 4	**Obj Strk:**										
Unit	**2 :** 1	**Alchl/Drgs:** 0	**Speed:** 60 MPH	**Dir:** W	**Veh Mnvr/Ped Actn:** 4	**Obj Strk:**										
Unit	**3 :** 4	**Alchl/Drgs:** 0	**Speed:** 60 MPH	**Dir:** W	**Veh Mnvr/Ped Actn:** 1	**Obj Strk:**										
792	**104353097**	23.158	04/18/2015 16:23	FIXED OBJECT	$ 4000	0	0	0	0	2	1	2	7	0	0	
Unit	**1 :** 1	**Alchl/Drgs:** 0	**Speed:** 60 MPH	**Dir:** E	**Veh Mnvr/Ped Actn:** 4	**Obj Strk:** 59										
793	**105532603**	23.158	07/05/2018 17:12	REAR END, SLOW OR STOP	$ 3500	0	0	0	0	1	1	1	3	0	0	
Unit	**1 :** 1	**Alchl/Drgs:** 0	**Speed:** 50 MPH	**Dir:** W	**Veh Mnvr/Ped Actn:** 1	**Obj Strk:**										
Unit	**2 :** 1	**Alchl/Drgs:** 0	**Speed:** 50 MPH	**Dir:** W	**Veh Mnvr/Ped Actn:** 4	**Obj Strk:**										
794	**104472236**	23.163	08/26/2015 08:15	REAR END, SLOW OR STOP	$ 1000	0	0	0	0	1	1	1	1	0	0	
Unit	**1 :** 2	**Alchl/Drgs:** 0	**Speed:** 55 MPH	**Dir:** S	**Veh Mnvr/Ped Actn:** 4	**Obj Strk:**										
Unit	**2 :** 2	**Alchl/Drgs:** 0	**Speed:** 60 MPH	**Dir:** S	**Veh Mnvr/Ped Actn:** 11	**Obj Strk:**										
795	**104522138**	23.163	10/11/2015 18:43	ANIMAL	$ 3000	0	0	0	0	1	2	1	7	0	0	
Unit	**1 :** 4	**Alchl/Drgs:** 0	**Speed:** 60 MPH	**Dir:** E	**Veh Mnvr/Ped Actn:** 4	**Obj Strk:** 17										
796	**104355773**	23.210	02/13/2015 11:30	RAN OFF ROAD - LEFT	$ 12000	0	0	1	0	1	5	1	3	0	0	
Unit	**1 :** 1	**Alchl/Drgs:** 7	**Speed:** 70 MPH	**Dir:** N	**Veh Mnvr/Ped Actn:** 4	**Obj Strk:** 58										
797	**105635259**	23.210	10/12/2018 08:53	ANIMAL	$ 3000	0	0	0	0	1	1	1		0		
Unit	**1 :** 1	**Alchl/Drgs:** 0	**Speed:** 0 MPH	**Dir:** E	**Veh Mnvr/Ped Actn:** 11	**Obj Strk:** 17										
798	**105635528**	23.210	10/12/2018 08:54	REAR END, SLOW OR STOP	$ 400	0	0	0	0	1	1	1	7	0	0	
Unit	**1 :** 5	**Alchl/Drgs:** 0	**Speed:** 60 MPH	**Dir:** E	**Veh Mnvr/Ped Actn:** 11	**Obj Strk:**										
Unit	**2 :** 1	**Alchl/Drgs:** 0	**Speed:** 60 MPH	**Dir:** E	**Veh Mnvr/Ped Actn:** 11	**Obj Strk:**										

All data presented in this report comes explicitly from the Traffic Engineering Accident Analysis System based upon va criteria provided by the report's creator. The onus is strictly upon the user of this report to exercise due diligence in in and further representing this data.

DocuSign Envelope ID: 5C03745C-4B01-4834-A65D-B77F558A4F46

North Carolina Department of Transportation
Traffic Engineering Accident Analysis System
Strip Analysis Report

Acc No	Crash ID	Milepost	Date	Accident Type	Total Damage	Injuries F	A	B	C	Condition R	L	W	Road Ch	Ci	Trfc Ctl Dv	Op
799	**105037715**	23.230	03/09/2017 08:46	SIDESWIPE, SAME DIRECTION	$ 3000	0	0	0	0	1	1	1	1	0	0	
Unit	**1 :** 14	**Alchl/Drgs:**	0	**Speed:** 60 MPH	**Dir:** E	**Veh Mnvr/Ped Actn:**			4			**Obj Strk:**				
Unit	**2 :** 10	**Alchl/Drgs:**	0	**Speed:** 60 MPH	**Dir:** E	**Veh Mnvr/Ped Actn:**			5			**Obj Strk:**				
800	**104890549**	23.238	10/19/2016 10:16	REAR END, SLOW OR STOP	$ 800	0	0	0	0	1	1	1	1	0	0	
Unit	**1 :** 1	**Alchl/Drgs:**	7	**Speed:** 45 MPH	**Dir:** W	**Veh Mnvr/Ped Actn:**			4			**Obj Strk:**				
Unit	**2 :** 4	**Alchl/Drgs:**	0	**Speed:** 45 MPH	**Dir:** W	**Veh Mnvr/Ped Actn:**			1			**Obj Strk:**				
801	**104112207**	23.255	07/27/2014 07:36	FIXED OBJECT	$ 10000	0	0	1	0	1	1	1	3	0	0	
Unit	**1 :** 2	**Alchl/Drgs:**	0	**Speed:** 70 MPH	**Dir:** N	**Veh Mnvr/Ped Actn:**			4			**Obj Strk:**			59	
802	**104691980**	23.255	04/01/2016 17:30	REAR END, SLOW OR STOP	$ 5000	0	0	0	0	1	1	1	1	0	0	
Unit	**1 :** 1	**Alchl/Drgs:**	0	**Speed:** 60 MPH	**Dir:** W	**Veh Mnvr/Ped Actn:**			4			**Obj Strk:**				
Unit	**2 :** 1	**Alchl/Drgs:**	0	**Speed:** 60 MPH	**Dir:** W	**Veh Mnvr/Ped Actn:**			1			**Obj Strk:**				
Unit	**3 :** 4	**Alchl/Drgs:**	0	**Speed:** 60 MPH	**Dir:** W	**Veh Mnvr/Ped Actn:**			1			**Obj Strk:**				
803	**104930341**	23.255	11/17/2016 18:19	REAR END, SLOW OR STOP	$ 10000	0	0	0	0	1	5	1	1	0	0	
Unit	**1 :** 1	**Alchl/Drgs:**	0	**Speed:** 45 MPH	**Dir:** W	**Veh Mnvr/Ped Actn:**			4			**Obj Strk:**				
Unit	**2 :** 1	**Alchl/Drgs:**	0	**Speed:** 35 MPH	**Dir:** W	**Veh Mnvr/Ped Actn:**			4			**Obj Strk:**				
Unit	**3 :** 1	**Alchl/Drgs:**	0	**Speed:** 30 MPH	**Dir:** W	**Veh Mnvr/Ped Actn:**			4			**Obj Strk:**				
804	**104966285**	23.255	12/28/2016 17:59	REAR END, SLOW OR STOP	$ 16000	0	0	0	0	1	5	1	3	0	0	
Unit	**1 :** 1	**Alchl/Drgs:**	0	**Speed:** 60 MPH	**Dir:** W	**Veh Mnvr/Ped Actn:**			4			**Obj Strk:**				
Unit	**2 :** 1	**Alchl/Drgs:**	0	**Speed:** 60 MPH	**Dir:** W	**Veh Mnvr/Ped Actn:**			11			**Obj Strk:**				
Unit	**3 :** 4	**Alchl/Drgs:**	0	**Speed:** 45 MPH	**Dir:** W	**Veh Mnvr/Ped Actn:**			1			**Obj Strk:**				
805	**105084968**	23.255	04/19/2017 07:21	SIDESWIPE, SAME DIRECTION	$ 3200	0	0	0	0	2	1	2	1	0	0	
Unit	**1 :** 1	**Alchl/Drgs:**	0	**Speed:** 60 MPH	**Dir:** S	**Veh Mnvr/Ped Actn:**			4			**Obj Strk:**				
Unit	**2 :** 2	**Alchl/Drgs:**	0	**Speed:** 60 MPH	**Dir:** S	**Veh Mnvr/Ped Actn:**			4			**Obj Strk:**				
806	**105181343**	23.255	07/31/2017 17:21	REAR END, SLOW OR STOP	$ 300	0	0	0	0	1	1	1	1	0	0	
Unit	**1 :** 4	**Alchl/Drgs:**	0	**Speed:** 15 MPH	**Dir:** W	**Veh Mnvr/Ped Actn:**			4			**Obj Strk:**				
Unit	**2 :** 1	**Alchl/Drgs:**	0	**Speed:** 10 MPH	**Dir:** W	**Veh Mnvr/Ped Actn:**			4			**Obj Strk:**				
807	**105218054**	23.255	09/07/2017 08:41	OTHER COLLISION WITH VEHICLE	$ 11025	1	0	0	0	1	1	1	3	0	0	
Unit	**1 :** 4	**Alchl/Drgs:**	0	**Speed:** 65 MPH	**Dir:** N	**Veh Mnvr/Ped Actn:**			16			**Obj Strk:**			33	

All data presented in this report comes explicitly from the Traffic Engineering Accident Analysis System based upon va criteria provided by the report's creator. The onus is strictly upon the user of this report to exercise due diligence in in and further representing this data.

DocuSign Envelope ID: 5C03745C-4B01-4834-A65D-B77F558A4F46

North Carolina Department of Transportation
Traffic Engineering Accident Analysis System
Strip Analysis Report

Acc No	Crash ID	Milepost	Date	Accident Type	Total Damage	Injuries F	A	B	C	Condition R	L	W	Road Ch	Ci	Trfc Ctl Dv	Op
Unit	**2 :** 2	**Alchl/Drgs:**	0	**Speed:** 60 MPH	**Dir:** N	**Veh Mnvr/Ped Actn:**				4			**Obj Strk:**			
Unit	**3 :** 10	**Alchl/Drgs:**	0	**Speed:** 60 MPH	**Dir:** N	**Veh Mnvr/Ped Actn:**				4			**Obj Strk:**			
808	**105262591**	23.255	10/22/2017 15:33	REAR END, SLOW OR STOP	$ 12000	0	0	0	0	1	1	1	1	0	0	
Unit	**1 :** 1	**Alchl/Drgs:**	0	**Speed:** 45 MPH	**Dir:** W	**Veh Mnvr/Ped Actn:**				4			**Obj Strk:**			
Unit	**2 :** 2	**Alchl/Drgs:**	0	**Speed:** 30 MPH	**Dir:** W	**Veh Mnvr/Ped Actn:**				11			**Obj Strk:**			
809	**105331916**	23.255	12/20/2017 17:06	REAR END, SLOW OR STOP	$ 8500	0	0	0	0	2	5	3	1	0	0	
Unit	**1 :** 2	**Alchl/Drgs:**	0	**Speed:** 50 MPH	**Dir:** W	**Veh Mnvr/Ped Actn:**				4			**Obj Strk:**			
Unit	**2 :** 1	**Alchl/Drgs:**	0	**Speed:** 0 MPH	**Dir:** W	**Veh Mnvr/Ped Actn:**				1			**Obj Strk:**			
Unit	**3 :** 1	**Alchl/Drgs:**	0	**Speed:** 0 MPH	**Dir:** W	**Veh Mnvr/Ped Actn:**				1			**Obj Strk:**			
Unit	**4 :** 2	**Alchl/Drgs:**	0	**Speed:** 0 MPH	**Dir:** W	**Veh Mnvr/Ped Actn:**				1			**Obj Strk:**			
810	**105439572**	23.255	04/06/2018 17:46	REAR END, SLOW OR STOP	$ 2900	0	0	0	0	2	1	3	3	0	0	
Unit	**1 :** 1	**Alchl/Drgs:**	0	**Speed:** 45 MPH	**Dir:** N	**Veh Mnvr/Ped Actn:**				4			**Obj Strk:**			
Unit	**2 :** 5	**Alchl/Drgs:**	0	**Speed:** 55 MPH	**Dir:** N	**Veh Mnvr/Ped Actn:**				1			**Obj Strk:**			
811	**105485193**	23.255	05/19/2018 14:59	REAR END, SLOW OR STOP	$ 3500	0	0	0	0	1	1	1	1	0	0	
Unit	**1 :** 1	**Alchl/Drgs:**	0	**Speed:** 40 MPH	**Dir:** W	**Veh Mnvr/Ped Actn:**				4			**Obj Strk:**			
Unit	**2 :** 4	**Alchl/Drgs:**	0	**Speed:** 0 MPH	**Dir:** W	**Veh Mnvr/Ped Actn:**				1			**Obj Strk:**			
812	**105492847**	23.255	05/28/2018 13:58	REAR END, SLOW OR STOP	$ 1900	0	0	0	0	2	1	3	3	0	0	
Unit	**1 :** 1	**Alchl/Drgs:**	3	**Speed:** 40 MPH	**Dir:** S	**Veh Mnvr/Ped Actn:**				4			**Obj Strk:**			
Unit	**2 :** 4	**Alchl/Drgs:**	0	**Speed:** 40 MPH	**Dir:** S	**Veh Mnvr/Ped Actn:**				11			**Obj Strk:**			
813	**105528330**	23.255	06/29/2018 12:25	REAR END, SLOW OR STOP	$ 8500	0	0	0	0	1	1	1	3	0	0	
Unit	**1 :** 2	**Alchl/Drgs:**	0	**Speed:** 50 MPH	**Dir:** N	**Veh Mnvr/Ped Actn:**				4			**Obj Strk:**			
Unit	**2 :** 4	**Alchl/Drgs:**	0	**Speed:** 50 MPH	**Dir:** N	**Veh Mnvr/Ped Actn:**				11			**Obj Strk:**			
Unit	**3 :** 2	**Alchl/Drgs:**	0	**Speed:** 50 MPH	**Dir:** N	**Veh Mnvr/Ped Actn:**				11			**Obj Strk:**			
814	**105540953**	23.255	07/10/2018 03:18	FIXED OBJECT	$ 8000	0	0	0	0	1	5	1	3	0	0	
Unit	**1 :** 1	**Alchl/Drgs:**	7	**Speed:** 75 MPH	**Dir:** W	**Veh Mnvr/Ped Actn:**				4			**Obj Strk:**		59	
815	**105652379**	23.255	10/26/2018 23:21	ANIMAL	$ 5000	0	0	0	0	2	5	2		0		
Unit	**1 :** 1	**Alchl/Drgs:**	0	**Speed:** 0 MPH	**Dir:** W	**Veh Mnvr/Ped Actn:**				4			**Obj Strk:**		17	

DocuSign Envelope ID: 5C03745C-4B01-4834-A65D-B77F558A4F46

North Carolina Department of Transportation
Traffic Engineering Accident Analysis System
Strip Analysis Report

Acc No	Crash ID	Milepost	Date	Accident Type	Total Damage	Injuries F	A	B	C	Condition R	L	W	Road Ch	Ci	Trfc Ctl Dv	Op
816	**104003572**	23.258	03/14/2014 16:51	REAR END, SLOW OR STOP	$ 4500	0	0	0	1	1	1	1	3	0	0	
Unit	**1 :** 2	**Alchl/Drgs:** 0	**Speed:** 60 MPH	**Dir:** W	**Veh Mnvr/Ped Actn:** 4	**Obj Strk:**										
Unit	**2 :** 1	**Alchl/Drgs:** 0	**Speed:** 60 MPH	**Dir:** W	**Veh Mnvr/Ped Actn:** 11	**Obj Strk:**										
Unit	**3 :** 1	**Alchl/Drgs:** 0	**Speed:** 60 MPH	**Dir:** W	**Veh Mnvr/Ped Actn:** 11	**Obj Strk:**										
817	**104199690**	23.258	10/31/2014 18:40	REAR END, SLOW OR STOP	$ 3800	0	0	0	0	2	5	2	7	0	0	
Unit	**1 :** 1	**Alchl/Drgs:** 0	**Speed:** 40 MPH	**Dir:** W	**Veh Mnvr/Ped Actn:** 4	**Obj Strk:**										
Unit	**2 :** 4	**Alchl/Drgs:** 0	**Speed:** 40 MPH	**Dir:** W	**Veh Mnvr/Ped Actn:** 11	**Obj Strk:**										
818	**104443691**	23.259	07/18/2015 13:20	REAR END, SLOW OR STOP	$ 2000	0	0	0	0	1	1	1	1	0	0	2
Unit	**1 :** 32	**Alchl/Drgs:** 7	**Speed:** 60 MPH	**Dir:** W	**Veh Mnvr/Ped Actn:** 4	**Obj Strk:**										
Unit	**2 :** 1	**Alchl/Drgs:** 0	**Speed:** 60 MPH	**Dir:** W	**Veh Mnvr/Ped Actn:** 4	**Obj Strk:**										
819	**104670956**	23.262	03/10/2016 07:32	REAR END, SLOW OR STOP	$ 1300	0	0	0	0	1	1	1	1	0	0	
Unit	**1 :** 2	**Alchl/Drgs:** 0	**Speed:** 35 MPH	**Dir:** S	**Veh Mnvr/Ped Actn:** 4	**Obj Strk:**										
Unit	**2 :** 1	**Alchl/Drgs:** 0	**Speed:** 30 MPH	**Dir:** S	**Veh Mnvr/Ped Actn:** 11	**Obj Strk:**										
820	**103982666**	23.263	02/20/2014 22:49	SIDESWIPE, SAME DIRECTION	$ 1000	0	0	0	0	1	5	1	3	0	0	
Unit	**1 :** 14	**Alchl/Drgs:** 0	**Speed:** 55 MPH	**Dir:** W	**Veh Mnvr/Ped Actn:** 4	**Obj Strk:**										
Unit	**2 :** 14	**Alchl/Drgs:** 0	**Speed:** 55 MPH	**Dir:** W	**Veh Mnvr/Ped Actn:** 4	**Obj Strk:**										
821	**104112204**	23.263	07/25/2014 16:37	REAR END, SLOW OR STOP	$ 4700	0	0	0	0	1	1	1	1	0	0	
Unit	**1 :** 4	**Alchl/Drgs:** 0	**Speed:** 45 MPH	**Dir:** E	**Veh Mnvr/Ped Actn:** 4	**Obj Strk:**										
Unit	**2 :** 1	**Alchl/Drgs:** 0	**Speed:** 45 MPH	**Dir:** E	**Veh Mnvr/Ped Actn:** 1	**Obj Strk:**										
Unit	**3 :** 2	**Alchl/Drgs:** 0	**Speed:** 45 MPH	**Dir:** E	**Veh Mnvr/Ped Actn:** 1	**Obj Strk:**										
822	**104272159**	23.263	01/05/2015 11:50	SIDESWIPE, SAME DIRECTION	$ 5400	0	0	0	0	1	1	1	3	0	0	
Unit	**1 :** 14	**Alchl/Drgs:** 0	**Speed:** 60 MPH	**Dir:** SE	**Veh Mnvr/Ped Actn:** 5	**Obj Strk:**										
Unit	**2 :** 4	**Alchl/Drgs:** 0	**Speed:** 60 MPH	**Dir:** SE	**Veh Mnvr/Ped Actn:** 4	**Obj Strk:**										
823	**104315338**	23.263	02/26/2015 00:33	FIXED OBJECT	$ 10000	0	0	0	8	5	5	4	1	0	0	
Unit	**1 :** 5	**Alchl/Drgs:** 0	**Speed:** 35 MPH	**Dir:** E	**Veh Mnvr/Ped Actn:** 4	**Obj Strk:** 44										
Unit	**2 :** 14	**Alchl/Drgs:** 0	**Speed:** 35 MPH	**Dir:** E	**Veh Mnvr/Ped Actn:** 6	**Obj Strk:**										
824	**104522979**	23.263	10/12/2015 15:57	SIDESWIPE, SAME DIRECTION	$ 1000	0	0	0	0	1	1	1	3	0	0	
Unit	**1 :** 4	**Alchl/Drgs:** 7	**Speed:** 60 MPH	**Dir:** E	**Veh Mnvr/Ped Actn:** 4	**Obj Strk:**										
Unit	**2 :** 4	**Alchl/Drgs:** 0	**Speed:** 5 MPH	**Dir:** E	**Veh Mnvr/Ped Actn:** 4	**Obj Strk:**										

All data presented in this report comes explicitly from the Traffic Engineering Accident Analysis System based upon va criteria provided by the report's creator. The onus is strictly upon the user of this report to exercise due diligence in in and further representing this data.

DocuSign Envelope ID: 5C03745C-4B01-4834-A65D-B77F558A4F46

North Carolina Department of Transportation
Traffic Engineering Accident Analysis System
Strip Analysis Report

Acc No	Crash ID	Milepost	Date	Accident Type	Total Damage	Injuries F	A	B	C	Condition R	L	W	Road Ch	Ci	Trfc Ctl Dv	Op
825	**104739044**	23.263	05/18/2016 16:20	REAR END, SLOW OR STOP	$ 10500	0	0	0	2	2	1	1	1	0	0	
Unit	**1 :** 1	**Alchl/Drgs:** 0	**Speed:** 60 MPH	**Dir:** W	**Veh Mnvr/Ped Actn:** 4	**Obj Strk:**										
Unit	**2 :** 1	**Alchl/Drgs:** 0	**Speed:** 0 MPH	**Dir:** W	**Veh Mnvr/Ped Actn:** 1	**Obj Strk:**										
Unit	**3 :** 1	**Alchl/Drgs:** 0	**Speed:** 0 MPH	**Dir:** W	**Veh Mnvr/Ped Actn:** 1	**Obj Strk:**										
826	**104817480**	23.263	08/11/2016 15:34	REAR END, SLOW OR STOP	$ 400	0	0	0	1	1	1	1	3	0	0	
Unit	**1 :** 2	**Alchl/Drgs:** 7	**Speed:** 0 MPH	**Dir:** W	**Veh Mnvr/Ped Actn:** 1	**Obj Strk:**										
Unit	**2 :** 1	**Alchl/Drgs:** 0	**Speed:** 60 MPH	**Dir:** W	**Veh Mnvr/Ped Actn:** 4	**Obj Strk:**										
827	**105335421**	23.263	12/27/2017 17:02	REAR END, SLOW OR STOP	$ 2000	0	0	0	0	1	1	1	1	0	0	
Unit	**1 :** 1	**Alchl/Drgs:** 0	**Speed:** 30 MPH	**Dir:** E	**Veh Mnvr/Ped Actn:** 4	**Obj Strk:**										
Unit	**2 :** 1	**Alchl/Drgs:** 0	**Speed:** 30 MPH	**Dir:** E	**Veh Mnvr/Ped Actn:** 11	**Obj Strk:**										
828	**105342311**	23.263	01/03/2018 05:18	FIXED OBJECT	$ 7000	0	0	0	0	1	5	1	5	0	0	
Unit	**1 :** 1	**Alchl/Drgs:** 0	**Speed:** 60 MPH	**Dir:** S	**Veh Mnvr/Ped Actn:** 4	**Obj Strk:** 59										
829	**105414785**	23.263	03/17/2018 16:44	REAR END, SLOW OR STOP	$ 5000	0	0	0	0	1	1	1	7	0	0	
Unit	**1 :** 2	**Alchl/Drgs:** 0	**Speed:** 60 MPH	**Dir:** W	**Veh Mnvr/Ped Actn:** 4	**Obj Strk:**										
Unit	**2 :** 1	**Alchl/Drgs:** 0	**Speed:** 60 MPH	**Dir:** W	**Veh Mnvr/Ped Actn:** 11	**Obj Strk:**										
830	**105460579**	23.263	04/26/2018 11:32	REAR END, SLOW OR STOP	$ 2300	0	0	0	0	1	1	2	1	0	0	
Unit	**1 :** 1	**Alchl/Drgs:** 0	**Speed:** 55 MPH	**Dir:** S	**Veh Mnvr/Ped Actn:** 4	**Obj Strk:**										
Unit	**2 :** 4	**Alchl/Drgs:** 0	**Speed:** 55 MPH	**Dir:** S	**Veh Mnvr/Ped Actn:** 1	**Obj Strk:**										
831	**105482482**	23.263	05/04/2018 15:05	SIDESWIPE, SAME DIRECTION	$ 4500	0	0	0	0	1	1	1	3	0	0	
Unit	**1 :** 1	**Alchl/Drgs:** 0	**Speed:** 65 MPH	**Dir:** E	**Veh Mnvr/Ped Actn:** 4	**Obj Strk:**										
Unit	**2 :** 4	**Alchl/Drgs:** 0	**Speed:** 60 MPH	**Dir:** E	**Veh Mnvr/Ped Actn:** 4	**Obj Strk:**										
832	**104428862**	23.267	07/01/2015 15:09	OVERTURN/ROLLOVER	$ 1200	0	0	1	0	2	1	2	3	0	0	
Unit	**1 :** 20	**Alchl/Drgs:** 0	**Speed:** 60 MPH	**Dir:** W	**Veh Mnvr/Ped Actn:** 4	**Obj Strk:**										
833	**104298462**	23.277	02/16/2015 14:42	FIXED OBJECT	$ 2500	0	0	0	0	4	1	6	3	0	0	
Unit	**1 :** 1	**Alchl/Drgs:** 0	**Speed:** 40 MPH	**Dir:** E	**Veh Mnvr/Ped Actn:** 4	**Obj Strk:** 59										

All data presented in this report comes explicitly from the Traffic Engineering Accident Analysis System based upon va criteria provided by the report's creator. The onus is strictly upon the user of this report to exercise due diligence in in and further representing this data.

DocuSign Envelope ID: 5C03745C-4B01-4834-A65D-B77F558A4F46

North Carolina Department of Transportation
Traffic Engineering Accident Analysis System
Strip Analysis Report

Acc No	Crash ID	Milepost	Date	Accident Type	Total Damage	Injuries F	A	B	C	Condition R	L	W	Road Ch	Ci	Trfc Ctl Dv	Op
834	**104126429**	23.338	08/12/2014 17:31	SIDESWIPE, SAME DIRECTION	$ 1200	0	0	0	0	1	1	1	3	0	0	
Unit	**1 :** 14	**Alchl/Drgs:** 0	**Speed:** 40 MPH	**Dir:** W	**Veh Mnvr/Ped Actn:** 11	**Obj Strk:**										
Unit	**2 :** 1	**Alchl/Drgs:** 0	**Speed:** 30 MPH	**Dir:** W	**Veh Mnvr/Ped Actn:** 1	**Obj Strk:**										
835	**105610647**	23.338	09/22/2018 13:38	REAR END, SLOW OR STOP	$ 13500	0	0	2	3	1	1	1	3	0	0	
Unit	**1 :** 1	**Alchl/Drgs:** 0	**Speed:** 45 MPH	**Dir:** W	**Veh Mnvr/Ped Actn:** 11	**Obj Strk:**										
Unit	**2 :** 1	**Alchl/Drgs:** 0	**Speed:** 45 MPH	**Dir:** W	**Veh Mnvr/Ped Actn:** 11	**Obj Strk:**										
Unit	**3 :** 4	**Alchl/Drgs:** 0	**Speed:** 45 MPH	**Dir:** W	**Veh Mnvr/Ped Actn:** 11	**Obj Strk:**										
Unit	**4 :** 1	**Alchl/Drgs:** 0	**Speed:** 45 MPH	**Dir:** W	**Veh Mnvr/Ped Actn:** 11	**Obj Strk:**										
836	**104232226**	23.355	11/29/2014 12:34	REAR END, SLOW OR STOP	$ 1500	0	0	0	0	1	1	1	3	0	0	
Unit	**1 :** 1	**Alchl/Drgs:** 0	**Speed:** 60 MPH	**Dir:** N	**Veh Mnvr/Ped Actn:** 4	**Obj Strk:**										
Unit	**2 :** 4	**Alchl/Drgs:** 0	**Speed:** 40 MPH	**Dir:** N	**Veh Mnvr/Ped Actn:** 11	**Obj Strk:**										
837	**104680835**	23.355	03/18/2016 15:51	REAR END, SLOW OR STOP	$ 8800	0	0	0	0	1	1	1	3	0	0	
Unit	**1 :** 2	**Alchl/Drgs:** 0	**Speed:** 40 MPH	**Dir:** N	**Veh Mnvr/Ped Actn:** 1	**Obj Strk:**										
Unit	**2 :** 3	**Alchl/Drgs:** 0	**Speed:** 40 MPH	**Dir:** N	**Veh Mnvr/Ped Actn:** 4	**Obj Strk:**										
838	**105687813**	23.355	11/25/2018 12:25	REAR END, SLOW OR STOP	$ 9000	0	0	0	0	1	1	1	1	0	0	
Unit	**1 :** 5	**Alchl/Drgs:** 0	**Speed:** 60 MPH	**Dir:** W	**Veh Mnvr/Ped Actn:** 4	**Obj Strk:**										
Unit	**2 :** 4	**Alchl/Drgs:** 0	**Speed:** 60 MPH	**Dir:** W	**Veh Mnvr/Ped Actn:** 1	**Obj Strk:**										
839	**104251483**	23.358	12/14/2014 22:07	SIDESWIPE, SAME DIRECTION	$ 2300	0	0	0	0	1	5	1	3	0	0	
Unit	**1 :** 14	**Alchl/Drgs:** 0	**Speed:** 50 MPH	**Dir:** E	**Veh Mnvr/Ped Actn:** 4	**Obj Strk:**										
Unit	**2 :** 1	**Alchl/Drgs:** 1	**Speed:** 60 MPH	**Dir:** E	**Veh Mnvr/Ped Actn:** 4	**Obj Strk:**										
840	**104543736**	23.358	11/05/2015 16:22	FIXED OBJECT	$ 4000	0	0	0	0	1	1	2	3	0	0	
Unit	**1 :** 1	**Alchl/Drgs:** 0	**Speed:** 60 MPH	**Dir:** E	**Veh Mnvr/Ped Actn:** 3	**Obj Strk:** 43										
841	**104656340**	23.358	02/21/2016 12:32	REAR END, SLOW OR STOP	$ 1500	0	0	0	0	2	1	2	1	0	0	
Unit	**1 :** 1	**Alchl/Drgs:** 0	**Speed:** 55 MPH	**Dir:** E	**Veh Mnvr/Ped Actn:** 4	**Obj Strk:**										
Unit	**2 :** 1	**Alchl/Drgs:** 0	**Speed:** 55 MPH	**Dir:** E	**Veh Mnvr/Ped Actn:** 11	**Obj Strk:**										
842	**104882535**	23.358	10/17/2016 07:32	REAR END, SLOW OR STOP	$ 3500	0	0	0	1	1	3	5	3	0	0	
Unit	**1 :** 1	**Alchl/Drgs:** 0	**Speed:** 60 MPH	**Dir:** S	**Veh Mnvr/Ped Actn:** 4	**Obj Strk:**										
Unit	**2 :** 2	**Alchl/Drgs:** 0	**Speed:** 60 MPH	**Dir:** S	**Veh Mnvr/Ped Actn:** 11	**Obj Strk:**										

All data presented in this report comes explicitly from the Traffic Engineering Accident Analysis System based upon va criteria provided by the report's creator. The onus is strictly upon the user of this report to exercise due diligence in in and further representing this data.

DocuSign Envelope ID: 5C03745C-4B01-4834-A65D-B77F558A4F46

North Carolina Department of Transportation
Traffic Engineering Accident Analysis System
Strip Analysis Report

Acc No	Crash ID	Milepost	Date	Accident Type	Total Damage	Injuries F	A	B	C	Condition R	L	W	Road Ch	Ci	Trfc Ctl Dv	Op
843	**105060370**	23.358	04/05/2017 16:52	REAR END, SLOW OR STOP	$ 11000	0	0	0	0	2	1	3	3	0	0	
Unit	**1 :** 1	**Alchl/Drgs:** 0	**Speed:** 45 MPH	**Dir:** E	**Veh Mnvr/Ped Actn:** 4	**Obj Strk:**										
Unit	**2 :** 2	**Alchl/Drgs:** 0	**Speed:** 45 MPH	**Dir:** E	**Veh Mnvr/Ped Actn:** 11	**Obj Strk:**										
844	**105243820**	23.358	10/03/2017 11:28	REAR END, SLOW OR STOP	$ 3300	0	0	0	0	1	1	1	3	0	0	
Unit	**1 :** 1	**Alchl/Drgs:** 1	**Speed:** 60 MPH	**Dir:** S	**Veh Mnvr/Ped Actn:** 4	**Obj Strk:**										
Unit	**2 :** 5	**Alchl/Drgs:** 0	**Speed:** 60 MPH	**Dir:** S	**Veh Mnvr/Ped Actn:** 11	**Obj Strk:**										
845	**105647143**	23.358	10/23/2018 00:29	ANIMAL	$ 2500	0	0	0	0	1	5	1		0		
Unit	**1 :** 1	**Alchl/Drgs:** 0	**Speed:** 0 MPH	**Dir:** E	**Veh Mnvr/Ped Actn:** 4	**Obj Strk:** 17										
846	**104931671**	23.363	11/28/2016 17:39	REAR END, SLOW OR STOP	$ 1000	0	0	0	0	1	2	1	3	0	3	1
Unit	**1 :** 2	**Alchl/Drgs:** 0	**Speed:** 45 MPH	**Dir:** W	**Veh Mnvr/Ped Actn:** 4	**Obj Strk:**										
Unit	**2 :** 1	**Alchl/Drgs:** 0	**Speed:** 35 MPH	**Dir:** W	**Veh Mnvr/Ped Actn:** 1	**Obj Strk:**										
847	**105145752**	23.363	06/26/2017 01:30	ANIMAL	$ 3000	0	0	0	0	1	5	1	1	0	0	
Unit	**1 :** 5	**Alchl/Drgs:** 0	**Speed:** 60 MPH	**Dir:** E	**Veh Mnvr/Ped Actn:** 4	**Obj Strk:** 17										
848	**104139812**	23.410	08/28/2014 17:05	REAR END, SLOW OR STOP	$ 3500	0	0	0	0	1	1	1	1	0	0	
Unit	**1 :** 4	**Alchl/Drgs:** 0	**Speed:** 55 MPH	**Dir:** W	**Veh Mnvr/Ped Actn:** 11	**Obj Strk:**										
Unit	**2 :** 4	**Alchl/Drgs:** 0	**Speed:** 55 MPH	**Dir:** W	**Veh Mnvr/Ped Actn:** 11	**Obj Strk:**										
849	**105290678**	23.438	11/15/2017 17:44	REAR END, SLOW OR STOP	$ 6000	0	0	0	1	1	1	1	3	0	0	
Unit	**1 :** 1	**Alchl/Drgs:** 0	**Speed:** 50 MPH	**Dir:** W	**Veh Mnvr/Ped Actn:** 11	**Obj Strk:**										
Unit	**2 :** 1	**Alchl/Drgs:** 0	**Speed:** 50 MPH	**Dir:** W	**Veh Mnvr/Ped Actn:** 11	**Obj Strk:**										
850	**104183809**	23.455	10/12/2014 04:52	FIXED OBJECT	$ 3200	0	0	0	0	2	5	3	1	0	0	
Unit	**1 :** 1	**Alchl/Drgs:** 1	**Speed:** 55 MPH	**Dir:** E	**Veh Mnvr/Ped Actn:** 4	**Obj Strk:** 48										
851	**105643901**	23.455	10/19/2018 16:49	REAR END, SLOW OR STOP	$ 3000	0	0	0	0	1	1	1	3	0	0	
Unit	**1 :** 2	**Alchl/Drgs:** 0	**Speed:** 50 MPH	**Dir:** NW	**Veh Mnvr/Ped Actn:** 4	**Obj Strk:**										
Unit	**2 :** 4	**Alchl/Drgs:** 0	**Speed:** 20 MPH	**Dir:** NW	**Veh Mnvr/Ped Actn:** 11	**Obj Strk:**										
852	**105694672**	23.455	11/29/2018 20:41	REAR END, SLOW OR STOP	$ 22000	0	0	0	0	1	5	1	1	0	0	
Unit	**1 :** 1	**Alchl/Drgs:** 0	**Speed:** 60 MPH	**Dir:** W	**Veh Mnvr/Ped Actn:** 4	**Obj Strk:**										
Unit	**2 :** 1	**Alchl/Drgs:** 0	**Speed:** 45 MPH	**Dir:** W	**Veh Mnvr/Ped Actn:** 1	**Obj Strk:**										

All data presented in this report comes explicitly from the Traffic Engineering Accident Analysis System based upon va criteria provided by the report's creator. The onus is strictly upon the user of this report to exercise due diligence in in and further representing this data.

DocuSign Envelope ID: 5C03745C-4B01-4834-A65D-B77F558A4F46

North Carolina Department of Transportation
Traffic Engineering Accident Analysis System
Strip Analysis Report

Acc No	Crash ID	Milepost	Date	Accident Type	Total Damage	Injuries F	A	B	C	Condition R	L	W	Road Ch	Ci	Trfc Ctl Dv	Op
Unit	**3 :** 2	**Alchl/Drgs:**	0	**Speed:** 45 MPH	**Dir:** W	**Veh Mnvr/Ped Actn:**				1			**Obj Strk:**			
853	**105723965**	23.463	12/26/2018 19:13	REAR END, SLOW OR STOP	$ 4500	0	0	0	0	1	5	1	1	0	0	
Unit	**1 :** 1	**Alchl/Drgs:**	0	**Speed:** 55 MPH	**Dir:** E	**Veh Mnvr/Ped Actn:**				4			**Obj Strk:**			
Unit	**2 :** 1	**Alchl/Drgs:**	0	**Speed:** 60 MPH	**Dir:** E	**Veh Mnvr/Ped Actn:**				11			**Obj Strk:**			
854	**105168643**	23.525	07/22/2017 16:56	REAR END, SLOW OR STOP	$ 2000	0	0	0	0	1	1	2	7	0	0	
Unit	**1 :** 4	**Alchl/Drgs:**	0	**Speed:** 10 MPH	**Dir:** W	**Veh Mnvr/Ped Actn:**				4			**Obj Strk:**			
Unit	**2 :** 1	**Alchl/Drgs:**	0	**Speed:** 10 MPH	**Dir:** W	**Veh Mnvr/Ped Actn:**				4			**Obj Strk:**			
855	**104614013**	23.538	01/12/2016 08:57	REAR END, SLOW OR STOP	$ 12900	0	0	0	1	1	1	1	3	0	0	
Unit	**1 :** 5	**Alchl/Drgs:**	0	**Speed:** 55 MPH	**Dir:** W	**Veh Mnvr/Ped Actn:**				4			**Obj Strk:**			
Unit	**2 :** 1	**Alchl/Drgs:**	0	**Speed:** 0 MPH	**Dir:** W	**Veh Mnvr/Ped Actn:**				1			**Obj Strk:**			
Unit	**3 :** 2	**Alchl/Drgs:**	0	**Speed:** 0 MPH	**Dir:** W	**Veh Mnvr/Ped Actn:**				1			**Obj Strk:**			
Unit	**4 :** 1	**Alchl/Drgs:**	0	**Speed:** 0 MPH	**Dir:** W	**Veh Mnvr/Ped Actn:**				1			**Obj Strk:**			
856	**104989074**	23.538	01/27/2017 15:13	SIDESWIPE, SAME DIRECTION	$ 9000	0	0	0	0	1	1	1	3	0	0	
Unit	**1 :** 2	**Alchl/Drgs:**	0	**Speed:** 45 MPH	**Dir:** W	**Veh Mnvr/Ped Actn:**				5			**Obj Strk:**			
Unit	**2 :** 2	**Alchl/Drgs:**	0	**Speed:** 50 MPH	**Dir:** W	**Veh Mnvr/Ped Actn:**				4			**Obj Strk:**		59	
857	**105292996**	23.538	11/16/2017 16:36	REAR END, SLOW OR STOP	$ 1800	0	0	0	1	1	1	1	3	0	0	
Unit	**1 :** 4	**Alchl/Drgs:**	0	**Speed:** 30 MPH	**Dir:** W	**Veh Mnvr/Ped Actn:**				11			**Obj Strk:**			
Unit	**2 :** 1	**Alchl/Drgs:**	0	**Speed:** 30 MPH	**Dir:** W	**Veh Mnvr/Ped Actn:**				1			**Obj Strk:**			
858	**104413419**	23.555	06/20/2015 11:45	REAR END, SLOW OR STOP	$ 4800	0	0	0	2	1	1	2	3	0	0	
Unit	**1 :** 4	**Alchl/Drgs:**	0	**Speed:** 40 MPH	**Dir:** W	**Veh Mnvr/Ped Actn:**				4			**Obj Strk:**			
Unit	**2 :** 1	**Alchl/Drgs:**	0	**Speed:** 0 MPH	**Dir:** W	**Veh Mnvr/Ped Actn:**				11			**Obj Strk:**			
859	**105243829**	23.555	10/03/2017 14:29	REAR END, SLOW OR STOP	$ 15000	0	0	0	0	1	1	1	1	0	0	
Unit	**1 :** 14	**Alchl/Drgs:**	0	**Speed:** 40 MPH	**Dir:** E	**Veh Mnvr/Ped Actn:**				4			**Obj Strk:**			
Unit	**2 :** 1	**Alchl/Drgs:**	0	**Speed:** 20 MPH	**Dir:** E	**Veh Mnvr/Ped Actn:**				4			**Obj Strk:**			
860	**105628981**	23.555	10/06/2018 13:56	REAR END, SLOW OR STOP	$ 11000	0	0	0	0	1	1	1	3	0	0	
Unit	**1 :** 2	**Alchl/Drgs:**	0	**Speed:** 30 MPH	**Dir:** N	**Veh Mnvr/Ped Actn:**				4			**Obj Strk:**			
Unit	**2 :** 2	**Alchl/Drgs:**	0	**Speed:** 0 MPH	**Dir:** N	**Veh Mnvr/Ped Actn:**				1			**Obj Strk:**			
Unit	**3 :** 2	**Alchl/Drgs:**	0	**Speed:** 0 MPH	**Dir:** N	**Veh Mnvr/Ped Actn:**				1			**Obj Strk:**			

DocuSign Envelope ID: 5C03745C-4B01-4834-A65D-B77F558A4F46

North Carolina Department of Transportation
Traffic Engineering Accident Analysis System
Strip Analysis Report

Acc No	Crash ID	Milepost	Date	Accident Type	Total Damage	Injuries F	A	B	C	Condition R	L	W	Road Ch	Ci	Trfc Ctl Dv	Op
861	**104958112**	23.563	12/23/2016 12:40	MOVABLE OBJECT	$ 500	0	0	0	0	1	1	1	3	2	0	
Unit	**1 :** 2	**Alchl/Drgs:** 0	**Speed:** 60 MPH	**Dir:** E	**Veh Mnvr/Ped Actn:** 4					**Obj Strk:** 18						
862	**104097083**	23.638	06/24/2014 14:10	REAR END, SLOW OR STOP	$ 7500	0	0	0	2	2	1	3	5	0	0	
Unit	**1 :** 1	**Alchl/Drgs:** 0	**Speed:** 45 MPH	**Dir:** E	**Veh Mnvr/Ped Actn:** 4					**Obj Strk:**						
Unit	**2 :** 4	**Alchl/Drgs:** 0	**Speed:** 45 MPH	**Dir:** E	**Veh Mnvr/Ped Actn:** 11					**Obj Strk:**						
863	**104250515**	23.638	12/19/2014 15:28	FIXED OBJECT	$ 32600	0	0	0	0	1	1	1	1	0	0	
Unit	**1 :** 14	**Alchl/Drgs:** 0	**Speed:** 60 MPH	**Dir:** W	**Veh Mnvr/Ped Actn:** 4					**Obj Strk:** 44						
Unit	**2 :** 1	**Alchl/Drgs:** 0	**Speed:** 55 MPH	**Dir:** W	**Veh Mnvr/Ped Actn:** 11					**Obj Strk:**						
864	**104368181**	23.638	04/23/2015 18:13	REAR END, SLOW OR STOP	$ 500	0	0	0	0	1	1	1	1	0		1
Unit	**1 :** 32	**Alchl/Drgs:** 7	**Speed:** 10 MPH	**Dir:** N	**Veh Mnvr/Ped Actn:** 4					**Obj Strk:**						
Unit	**2 :** 4	**Alchl/Drgs:** 0	**Speed:** 0 MPH	**Dir:** N	**Veh Mnvr/Ped Actn:** 1					**Obj Strk:**						
865	**104453220**	23.638	07/31/2015 12:27	REAR END, SLOW OR STOP	$ 10000	0	0	0	0	1	1	1	3	0	0	
Unit	**1 :** 3	**Alchl/Drgs:** 0	**Speed:** 70 MPH	**Dir:** W	**Veh Mnvr/Ped Actn:** 4					**Obj Strk:**						
Unit	**2 :** 1	**Alchl/Drgs:** 0	**Speed:** 70 MPH	**Dir:** W	**Veh Mnvr/Ped Actn:** 4					**Obj Strk:**						
866	**104720190**	23.638	05/02/2016 17:19	REAR END, SLOW OR STOP	$ 2500	0	0	0	0	1	1	1	3	0	0	
Unit	**1 :** 4	**Alchl/Drgs:** 0	**Speed:** 60 MPH	**Dir:** W	**Veh Mnvr/Ped Actn:** 4					**Obj Strk:**						
Unit	**2 :** 5	**Alchl/Drgs:** 0	**Speed:** 60 MPH	**Dir:** W	**Veh Mnvr/Ped Actn:** 1					**Obj Strk:**						
867	**105009528**	23.638	02/14/2017 16:18	SIDESWIPE, SAME DIRECTION	$ 5800	0	0	0	0	1	1	2	7	0	0	
Unit	**1 :** 14	**Alchl/Drgs:** 0	**Speed:** 45 MPH	**Dir:** W	**Veh Mnvr/Ped Actn:** 4					**Obj Strk:**						
Unit	**2 :** 1	**Alchl/Drgs:** 0	**Speed:** 45 MPH	**Dir:** W	**Veh Mnvr/Ped Actn:** 4					**Obj Strk:** 59						
868	**105086207**	23.638	04/22/2017 11:38	FIXED OBJECT	$ 3000	0	0	0	3	1	1	1	1	0	0	
Unit	**1 :** 1	**Alchl/Drgs:** 0	**Speed:** 60 MPH	**Dir:** E	**Veh Mnvr/Ped Actn:** 4					**Obj Strk:** 44						
869	**105326664**	23.638	12/18/2017 15:56	REAR END, SLOW OR STOP	$ 1000	0	0	0	0	1	1	1	3	0	0	
Unit	**1 :** 1	**Alchl/Drgs:** 0	**Speed:** 15 MPH	**Dir:** W	**Veh Mnvr/Ped Actn:** 5					**Obj Strk:**						
Unit	**2 :** 4	**Alchl/Drgs:** 0	**Speed:** 5 MPH	**Dir:** W	**Veh Mnvr/Ped Actn:** 4					**Obj Strk:**						
870	**105329303**	23.638	12/19/2017 18:38	REAR END, SLOW OR STOP	$ 4500	0	0	0	1	1	5	1	3	0	0	
Unit	**1 :** 13	**Alchl/Drgs:** 0	**Speed:** 60 MPH	**Dir:** W	**Veh Mnvr/Ped Actn:** 4					**Obj Strk:**						

All data presented in this report comes explicitly from the Traffic Engineering Accident Analysis System based upon va criteria provided by the report's creator. The onus is strictly upon the user of this report to exercise due diligence in in and further representing this data.

DocuSign Envelope ID: 5C03745C-4B01-4834-A65D-B77F558A4F46

North Carolina Department of Transportation
Traffic Engineering Accident Analysis System
Strip Analysis Report

Acc No	Crash ID	Milepost	Date	Accident Type	Total Damage	Injuries F	A	B	C	Condition R	L	W	Road Ch	Ci	Trfc Ctl Dv	Op
Unit	**2 :** 1	**Alchl/Drgs:**	0	**Speed:** 0 MPH	**Dir:** W	**Veh Mnvr/Ped Actn:**				1			**Obj Strk:**			
Unit	**3 :** 1	**Alchl/Drgs:**	0	**Speed:** 0 MPH	**Dir:** W	**Veh Mnvr/Ped Actn:**				1			**Obj Strk:**			
871	**105400503**	23.638	03/01/2018 06:32	OVERTURN/ROLLOVER	$ 3000	0	0	0	0	2	2	3	3	0	0	
Unit	**1 :** 20	**Alchl/Drgs:**	7	**Speed:** 60 MPH	**Dir:** W	**Veh Mnvr/Ped Actn:**				4			**Obj Strk:**			
872	**105721048**	23.638	12/21/2018 17:55	REAR END, SLOW OR STOP	$ 1250	0	0	0	0	2	1	3	3	0	0	
Unit	**1 :** 2	**Alchl/Drgs:**	0	**Speed:** 30 MPH	**Dir:** N	**Veh Mnvr/Ped Actn:**				4			**Obj Strk:**			
Unit	**2 :** 4	**Alchl/Drgs:**	0	**Speed:** 30 MPH	**Dir:** N	**Veh Mnvr/Ped Actn:**				11			**Obj Strk:**			
873	**103965585**	23.655	01/29/2014 17:16	FIXED OBJECT	$ 2000	0	0	0	1	1	1	1	3	0	0	
Unit	**1 :** 2	**Alchl/Drgs:**	0	**Speed:** 60 MPH	**Dir:** S	**Veh Mnvr/Ped Actn:**				4			**Obj Strk:**		46	
874	**104283292**	23.655	01/30/2015 14:09	SIDESWIPE, SAME DIRECTION	$ 4000	0	0	0	0	1	1	1	3	0	0	
Unit	**1 :** 1	**Alchl/Drgs:**	0	**Speed:** 55 MPH	**Dir:** E	**Veh Mnvr/Ped Actn:**				5			**Obj Strk:**			
Unit	**2 :** 2	**Alchl/Drgs:**	0	**Speed:** 60 MPH	**Dir:** E	**Veh Mnvr/Ped Actn:**				4			**Obj Strk:**			
875	**104366512**	23.655	05/01/2015 18:34	REAR END, SLOW OR STOP	$ 1000	0	0	0	0	1	1	1	1	0	0	
Unit	**1 :** 4	**Alchl/Drgs:**	0	**Speed:** 10 MPH	**Dir:** S	**Veh Mnvr/Ped Actn:**				4			**Obj Strk:**			
Unit	**2 :** 4	**Alchl/Drgs:**	0	**Speed:** 5 MPH	**Dir:** S	**Veh Mnvr/Ped Actn:**				11			**Obj Strk:**			
876	**104410865**	23.655	06/11/2015 21:52	REAR END, SLOW OR STOP	$ 9500	0	0	0	2	1	5	1	2	0	0	
Unit	**1 :** 2	**Alchl/Drgs:**	0	**Speed:** 80 MPH	**Dir:** S	**Veh Mnvr/Ped Actn:**				4			**Obj Strk:**			
Unit	**2 :** 1	**Alchl/Drgs:**	0	**Speed:** 60 MPH	**Dir:** S	**Veh Mnvr/Ped Actn:**				4			**Obj Strk:**		46	
877	**104896228**	23.655	10/28/2016 14:06	REAR END, SLOW OR STOP	$ 2500	0	0	0	0	1	1	1	1	0	0	
Unit	**1 :** 2	**Alchl/Drgs:**	0	**Speed:** 60 MPH	**Dir:** W	**Veh Mnvr/Ped Actn:**				4			**Obj Strk:**			
Unit	**2 :** 4	**Alchl/Drgs:**	7	**Speed:** 65 MPH	**Dir:** W	**Veh Mnvr/Ped Actn:**				11			**Obj Strk:**			
878	**104919888**	23.655	11/14/2016 17:51	REAR END, SLOW OR STOP	$ 13500	0	0	0	0	1	5	1	3	0	0	
Unit	**1 :** 4	**Alchl/Drgs:**	0	**Speed:** 60 MPH	**Dir:** W	**Veh Mnvr/Ped Actn:**				4			**Obj Strk:**			
Unit	**2 :** 4	**Alchl/Drgs:**	0	**Speed:** 60 MPH	**Dir:** W	**Veh Mnvr/Ped Actn:**				11			**Obj Strk:**			
Unit	**3 :** 4	**Alchl/Drgs:**	0	**Speed:** 60 MPH	**Dir:** W	**Veh Mnvr/Ped Actn:**				1			**Obj Strk:**			
879	**104921521**	23.655	11/21/2016 08:59	REAR END, SLOW OR STOP	$ 500	0	0	0	1	1	1	1	3	0	0	
Unit	**1 :** 2	**Alchl/Drgs:**	0	**Speed:** 10 MPH	**Dir:** N	**Veh Mnvr/Ped Actn:**				4			**Obj Strk:**			
Unit	**2 :** 1	**Alchl/Drgs:**	0	**Speed:** 10 MPH	**Dir:** N	**Veh Mnvr/Ped Actn:**				1			**Obj Strk:**			

DocuSign Envelope ID: 5C03745C-4B01-4834-A65D-B77F558A4F46

North Carolina Department of Transportation
Traffic Engineering Accident Analysis System
Strip Analysis Report

Acc No	Crash ID	Milepost	Date	Accident Type	Total Damage	Injuries F	A	B	C	Condition R	L	W	Road Ch	Ci	Trfc Ctl Dv	Op
880	**105265152**	23.655	10/25/2017 07:53	REAR END, SLOW OR STOP	$ 8500	0	0	0	2	1	1	1	6	0	0	
Unit	**1 :** 4	**Alchl/Drgs:**	0	**Speed:**	55 MPH	**Dir:**	N	**Veh Mnvr/Ped Actn:**		4		**Obj Strk:**				
Unit	**2 :** 1	**Alchl/Drgs:**	0	**Speed:**	55 MPH	**Dir:**	N	**Veh Mnvr/Ped Actn:**		11		**Obj Strk:**				
Unit	**3 :** 3	**Alchl/Drgs:**	0	**Speed:**	40 MPH	**Dir:**	N	**Veh Mnvr/Ped Actn:**		1		**Obj Strk:**				
881	**105643489**	23.655	10/16/2018 22:29	FIXED OBJECT	$ 11000	0	0	0	0	2	5	3	1	0	0	
Unit	**1 :** 4	**Alchl/Drgs:**	0	**Speed:**	60 MPH	**Dir:**	W	**Veh Mnvr/Ped Actn:**		4		**Obj Strk:**		41		
882	**105723961**	23.655	12/26/2018 16:37	REAR END, SLOW OR STOP	$ 3000	0	0	0	0	1	1	1	3	0	0	
Unit	**1 :** 4	**Alchl/Drgs:**	0	**Speed:**	35 MPH	**Dir:**	W	**Veh Mnvr/Ped Actn:**		1		**Obj Strk:**				
Unit	**2 :** 4	**Alchl/Drgs:**	0	**Speed:**	35 MPH	**Dir:**	W	**Veh Mnvr/Ped Actn:**		1		**Obj Strk:**				
Unit	**3 :** 4	**Alchl/Drgs:**	0	**Speed:**	35 MPH	**Dir:**	W	**Veh Mnvr/Ped Actn:**		4		**Obj Strk:**				
883	**105688550**	23.717	11/26/2018 18:09	REAR END, SLOW OR STOP	$ 2000	0	0	0	0	1	5	1	1	0	0	
Unit	**1 :** 4	**Alchl/Drgs:**	0	**Speed:**	25 MPH	**Dir:**	S	**Veh Mnvr/Ped Actn:**		4		**Obj Strk:**				
Unit	**2 :** 1	**Alchl/Drgs:**	0	**Speed:**	25 MPH	**Dir:**	S	**Veh Mnvr/Ped Actn:**		1		**Obj Strk:**				
884	**104181572**	23.755	10/13/2014 19:26	REAR END, SLOW OR STOP	$ 2600	0	0	0	0	1	5	2	3	0	0	
Unit	**1 :** 3	**Alchl/Drgs:**	0	**Speed:**	60 MPH	**Dir:**	N	**Veh Mnvr/Ped Actn:**		4		**Obj Strk:**				
Unit	**2 :** 3	**Alchl/Drgs:**	0	**Speed:**	55 MPH	**Dir:**	N	**Veh Mnvr/Ped Actn:**		4		**Obj Strk:**				
885	**104186219**	23.755	10/18/2014 15:34	REAR END, SLOW OR STOP	$ 1000	0	0	0	1	1	1	1	3	0	0	
Unit	**1 :** 1	**Alchl/Drgs:**	0	**Speed:**	50 MPH	**Dir:**	W	**Veh Mnvr/Ped Actn:**		11		**Obj Strk:**				
Unit	**2 :** 1	**Alchl/Drgs:**	0	**Speed:**	50 MPH	**Dir:**	W	**Veh Mnvr/Ped Actn:**		11		**Obj Strk:**				
886	**104203100**	23.755	11/04/2014 15:54	REAR END, SLOW OR STOP	$ 1400	0	0	0	0	1	1	1	1	0	0	
Unit	**1 :** 10	**Alchl/Drgs:**	0	**Speed:**	10 MPH	**Dir:**	S	**Veh Mnvr/Ped Actn:**		11		**Obj Strk:**				
Unit	**2 :** 1	**Alchl/Drgs:**	0	**Speed:**	5 MPH	**Dir:**	S	**Veh Mnvr/Ped Actn:**		11		**Obj Strk:**				
887	**104279696**	23.755	01/28/2015 08:43	REAR END, SLOW OR STOP	$ 3000	0	0	0	0	1	1	1	1	0	0	
Unit	**1 :** 1	**Alchl/Drgs:**	0	**Speed:**	45 MPH	**Dir:**	W	**Veh Mnvr/Ped Actn:**		4		**Obj Strk:**				
Unit	**2 :** 5	**Alchl/Drgs:**	0	**Speed:**	45 MPH	**Dir:**	W	**Veh Mnvr/Ped Actn:**		1		**Obj Strk:**				
888	**104336002**	23.755	03/30/2015 16:31	REAR END, SLOW OR STOP	$ 1000	0	0	0	0	1	1	1	5	0	0	
Unit	**1 :** 1	**Alchl/Drgs:**	0	**Speed:**	35 MPH	**Dir:**	N	**Veh Mnvr/Ped Actn:**		4		**Obj Strk:**				
Unit	**2 :** 1	**Alchl/Drgs:**	0	**Speed:**	35 MPH	**Dir:**	N	**Veh Mnvr/Ped Actn:**		11		**Obj Strk:**				

DocuSign Envelope ID: 5C03745C-4B01-4834-A65D-B77F558A4F46

North Carolina Department of Transportation
Traffic Engineering Accident Analysis System
Strip Analysis Report

Acc No	Crash ID	Milepost	Date	Accident Type	Total Damage	Injuries F	A	B	C	Condition R	L	W	Road Ch	Ci	Trfc Ctl Dv	Op
889	**104427103**	23.755	07/05/2015 14:27	REAR END, SLOW OR STOP	$ 2200	0	0	0	0	1	1	1	2	0	0	
Unit	**1 :** 2	**Alchl/Drgs:** 0	**Speed:** 50 MPH	**Dir:** N	**Veh Mnvr/Ped Actn:** 4	**Obj Strk:**										
Unit	**2 :** 4	**Alchl/Drgs:** 0	**Speed:** 50 MPH	**Dir:** N	**Veh Mnvr/Ped Actn:** 1	**Obj Strk:**										
890	**104427109**	23.755	07/07/2015 06:48	SIDESWIPE, SAME DIRECTION	$ 2100	0	0	0	0	1	3	1	1	0	0	
Unit	**1 :** 2	**Alchl/Drgs:** 0	**Speed:** 60 MPH	**Dir:** S	**Veh Mnvr/Ped Actn:** 5	**Obj Strk:**										
Unit	**2 :** 4	**Alchl/Drgs:** 0	**Speed:** 60 MPH	**Dir:** S	**Veh Mnvr/Ped Actn:** 4	**Obj Strk:**										
891	**104436032**	23.755	07/17/2015 22:23	SIDESWIPE, SAME DIRECTION	$ 1300	0	0	0	0	1	5	1	1	0	0	
Unit	**1 :** 14	**Alchl/Drgs:** 0	**Speed:** 5 MPH	**Dir:** S	**Veh Mnvr/Ped Actn:** 4	**Obj Strk:**										
Unit	**2 :** 1	**Alchl/Drgs:** 0	**Speed:** 5 MPH	**Dir:** S	**Veh Mnvr/Ped Actn:** 5	**Obj Strk:**										
892	**104547458**	23.755	11/06/2015 08:42	REAR END, SLOW OR STOP	$ 3500	0	0	0	0	2	1	2	3	0	0	
Unit	**1 :** 1	**Alchl/Drgs:** 0	**Speed:** 55 MPH	**Dir:** N	**Veh Mnvr/Ped Actn:** 4	**Obj Strk:**										
Unit	**2 :** 1	**Alchl/Drgs:** 7	**Speed:** 55 MPH	**Dir:** N	**Veh Mnvr/Ped Actn:** 4	**Obj Strk:**										
893	**104836367**	23.755	08/26/2016 15:24	REAR END, SLOW OR STOP	$ 8700	0	0	0	0	1	1	1	3	0	0	
Unit	**1 :** 1	**Alchl/Drgs:** 0	**Speed:** 50 MPH	**Dir:** N	**Veh Mnvr/Ped Actn:** 4	**Obj Strk:**										
Unit	**2 :** 4	**Alchl/Drgs:** 0	**Speed:** 50 MPH	**Dir:** N	**Veh Mnvr/Ped Actn:** 11	**Obj Strk:**										
Unit	**3 :** 4	**Alchl/Drgs:** 0	**Speed:** 50 MPH	**Dir:** N	**Veh Mnvr/Ped Actn:** 11	**Obj Strk:**										
Unit	**4 :** 1	**Alchl/Drgs:** 0	**Speed:** 50 MPH	**Dir:** N	**Veh Mnvr/Ped Actn:** 11	**Obj Strk:**										
894	**104937737**	23.755	12/06/2016 20:02	OTHER COLLISION WITH VEHICLE	$ 200	0	0	0	0	1	5	1	3	0	0	
Unit	**1 :** 2	**Alchl/Drgs:** 0	**Speed:** 0 MPH	**Dir:** W	**Veh Mnvr/Ped Actn:** 1	**Obj Strk:**										
Unit	**2 :** 4	**Alchl/Drgs:** 7	**Speed:** 0 MPH	**Dir:** E	**Veh Mnvr/Ped Actn:** 2	**Obj Strk:**										
895	**104960981**	23.755	12/26/2016 13:59	REAR END, SLOW OR STOP	$ 2000	0	0	0	0	1	1	1	1	0	0	
Unit	**1 :** 1	**Alchl/Drgs:** 0	**Speed:** 25 MPH	**Dir:** W	**Veh Mnvr/Ped Actn:** 4	**Obj Strk:**										
Unit	**2 :** 1	**Alchl/Drgs:** 0	**Speed:** 20 MPH	**Dir:** W	**Veh Mnvr/Ped Actn:** 11	**Obj Strk:**										
896	**105104528**	23.755	05/19/2017 09:24	REAR END, SLOW OR STOP	$ 1800	0	0	0	0	1	1	1	2	0	0	
Unit	**1 :** 1	**Alchl/Drgs:** 0	**Speed:** 55 MPH	**Dir:** S	**Veh Mnvr/Ped Actn:** 4	**Obj Strk:**										
Unit	**2 :** 1	**Alchl/Drgs:** 0	**Speed:** 55 MPH	**Dir:** S	**Veh Mnvr/Ped Actn:** 11	**Obj Strk:**										
897	**105253610**	23.755	10/15/2017 14:09	REAR END, SLOW OR STOP	$ 1500	0	0	0	0	1	1	1	1	0	0	
Unit	**1 :** 1	**Alchl/Drgs:** 0	**Speed:** 60 MPH	**Dir:** W	**Veh Mnvr/Ped Actn:** 1	**Obj Strk:**										

All data presented in this report comes explicitly from the Traffic Engineering Accident Analysis System based upon va criteria provided by the report's creator. The onus is strictly upon the user of this report to exercise due diligence in in and further representing this data.

DocuSign Envelope ID: 5C03745C-4B01-4834-A65D-B77F558A4F46

North Carolina Department of Transportation
Traffic Engineering Accident Analysis System
Strip Analysis Report

Acc No	Crash ID	Milepost	Date	Accident Type	Total Damage	Injuries F	A	B	C	Condition R	L	W	Road Ch	Ci	Trfc Ctl Dv	Op
Unit	**2 :** 1	**Alchl/Drgs:**	0	**Speed:** 60 MPH	**Dir:** W	**Veh Mnvr/Ped Actn:**				4			**Obj Strk:**			
898	**105353513**	23.755	01/12/2018 02:46	OVERTURN/ROLLOVER	$ 5000	0	0	0	0	2	5	2	1	0	0	
Unit	**1 :** 4	**Alchl/Drgs:**	1	**Speed:** 60 MPH	**Dir:** W	**Veh Mnvr/Ped Actn:**				4			**Obj Strk:**			
899	**105353483**	23.755	01/15/2018 13:05	REAR END, SLOW OR STOP	$ 12000	0	0	0	1	1	1	1	2	0	0	
Unit	**1 :** 4	**Alchl/Drgs:**	0	**Speed:** 65 MPH	**Dir:** W	**Veh Mnvr/Ped Actn:**				4			**Obj Strk:**			
Unit	**2 :** 1	**Alchl/Drgs:**	0	**Speed:** 55 MPH	**Dir:** W	**Veh Mnvr/Ped Actn:**				11			**Obj Strk:**			
900	**105534050**	23.755	07/06/2018 14:00	REAR END, SLOW OR STOP	$ 1900	0	0	0	0	1	1	2	1	0	0	
Unit	**1 :** 2	**Alchl/Drgs:**	0	**Speed:** 40 MPH	**Dir:** S	**Veh Mnvr/Ped Actn:**				4			**Obj Strk:**			
Unit	**2 :** 1	**Alchl/Drgs:**	0	**Speed:** 40 MPH	**Dir:** S	**Veh Mnvr/Ped Actn:**				11			**Obj Strk:**			
901	**105546017**	23.755	07/19/2018 09:19	REAR END, SLOW OR STOP	$ 3100	0	0	0	0	1	1	2	3	0	0	
Unit	**1 :** 1	**Alchl/Drgs:**	0	**Speed:** 40 MPH	**Dir:** E	**Veh Mnvr/Ped Actn:**				4			**Obj Strk:**			
Unit	**2 :** 1	**Alchl/Drgs:**	0	**Speed:** 40 MPH	**Dir:** E	**Veh Mnvr/Ped Actn:**				1			**Obj Strk:**			
902	**105560728**	23.755	07/28/2018 17:30	REAR END, SLOW OR STOP	$ 4000	0	0	0	1	1	1	1	1	0	0	
Unit	**1 :** 14	**Alchl/Drgs:**	0	**Speed:** 20 MPH	**Dir:** W	**Veh Mnvr/Ped Actn:**				1			**Obj Strk:**			
Unit	**2 :** 1	**Alchl/Drgs:**	0	**Speed:** 45 MPH	**Dir:** W	**Veh Mnvr/Ped Actn:**				4			**Obj Strk:**			
903	**105674363**	23.755	11/07/2018 20:56	OTHER COLLISION WITH VEHICLE	$ 6500	0	0	0	0	1	5	1	3	0	0	
Unit	**1 :** 12	**Alchl/Drgs:**	0	**Speed:** 20 MPH	**Dir:** N	**Veh Mnvr/Ped Actn:**				4			**Obj Strk:**			
Unit	**2 :** 12	**Alchl/Drgs:**	0	**Speed:** 20 MPH	**Dir:** N	**Veh Mnvr/Ped Actn:**				4			**Obj Strk:**			
904	**105015768**	23.758	02/20/2017 16:46	REAR END, SLOW OR STOP	$ 7000	0	0	0	1	1	1	1	1	0	0	
Unit	**1 :** 4	**Alchl/Drgs:**	0	**Speed:** 40 MPH	**Dir:** E	**Veh Mnvr/Ped Actn:**				4			**Obj Strk:**			
Unit	**2 :** 4	**Alchl/Drgs:**	0	**Speed:** 30 MPH	**Dir:** E	**Veh Mnvr/Ped Actn:**				4			**Obj Strk:**			
905	**105020339**	23.758	02/26/2017 14:24	FIXED OBJECT	$ 1000	0	0	0	1	1	1	1	1	0	0	
Unit	**1 :** 4	**Alchl/Drgs:**	0	**Speed:** 40 MPH	**Dir:** E	**Veh Mnvr/Ped Actn:**				4			**Obj Strk:**		59	
906	**105214814**	23.758	08/30/2017 16:47	REAR END, SLOW OR STOP	$ 2000	0	0	0	0	1	1	2	1	0	0	
Unit	**1 :** 1	**Alchl/Drgs:**	0	**Speed:** 35 MPH	**Dir:** E	**Veh Mnvr/Ped Actn:**				4			**Obj Strk:**			
Unit	**2 :** 1	**Alchl/Drgs:**	3	**Speed:** 25 MPH	**Dir:** E	**Veh Mnvr/Ped Actn:**				4			**Obj Strk:**			

All data presented in this report comes explicitly from the Traffic Engineering Accident Analysis System based upon va criteria provided by the report's creator. The onus is strictly upon the user of this report to exercise due diligence in in and further representing this data.

DocuSign Envelope ID: 5C03745C-4B01-4834-A65D-B77F558A4F46

North Carolina Department of Transportation
Traffic Engineering Accident Analysis System
Strip Analysis Report

Acc No	Crash ID	Milepost	Date	Accident Type	Total Damage	Injuries F	A	B	C	Condition R	L	W	Road Ch	Ci	Trfc Ctl Dv	Op
907	**105679464**	23.758	11/16/2018 23:57	SIDESWIPE, SAME DIRECTION	$ 4500	0	0	0	0	1	5	1	3	0	0	
Unit	**1 :** 4	**Alchl/Drgs:** 1	**Speed:** 60 MPH	**Dir:** E	**Veh Mnvr/Ped Actn:** 5	**Obj Strk:**										
Unit	**2 :** 2	**Alchl/Drgs:** 0	**Speed:** 60 MPH	**Dir:** E	**Veh Mnvr/Ped Actn:** 4	**Obj Strk:**										
908	**105714868**	23.758	12/17/2018 20:27	REAR END, SLOW OR STOP	$ 1001	0	0	0	0	1	5	1	1	0	0	
Unit	**1 :** 4	**Alchl/Drgs:** 0	**Speed:** 25 MPH	**Dir:** E	**Veh Mnvr/Ped Actn:** 4	**Obj Strk:**										
Unit	**2 :** 1	**Alchl/Drgs:** 0	**Speed:** 0 MPH	**Dir:** E	**Veh Mnvr/Ped Actn:** 1	**Obj Strk:**										
909	**104896105**	23.763	10/27/2016 18:04	REAR END, SLOW OR STOP	$ 8000	0	0	0	0	1	1	1	1	0	0	
Unit	**1 :** 2	**Alchl/Drgs:** 0	**Speed:** 55 MPH	**Dir:** E	**Veh Mnvr/Ped Actn:** 4	**Obj Strk:**										
Unit	**2 :** 1	**Alchl/Drgs:** 0	**Speed:** 45 MPH	**Dir:** E	**Veh Mnvr/Ped Actn:** 11	**Obj Strk:**										
Unit	**3 :** 1	**Alchl/Drgs:** 0	**Speed:** 35 MPH	**Dir:** E	**Veh Mnvr/Ped Actn:** 11	**Obj Strk:**										
910	**105339728**	23.763	12/31/2017 20:40	JACKKNIFE	$ 2000	0	0	0	0	4	5	6	1	0	0	
Unit	**1 :** 15	**Alchl/Drgs:** 0	**Speed:** 5 MPH	**Dir:** E	**Veh Mnvr/Ped Actn:** 11	**Obj Strk:** 44										
911	**105473655**	23.763	05/07/2018 14:52	REAR END, SLOW OR STOP	$ 3000	0	0	0	1	1	1	2	1	0	0	
Unit	**1 :** 4	**Alchl/Drgs:** 0	**Speed:** 55 MPH	**Dir:** E	**Veh Mnvr/Ped Actn:** 4	**Obj Strk:**										
Unit	**2 :** 1	**Alchl/Drgs:** 7	**Speed:** 45 MPH	**Dir:** E	**Veh Mnvr/Ped Actn:** 4	**Obj Strk:**										
Unit	**3 :** 1	**Alchl/Drgs:** 0	**Speed:** 30 MPH	**Dir:** E	**Veh Mnvr/Ped Actn:** 11	**Obj Strk:**										
912	**105498350**	23.763	06/02/2018 01:22	FIXED OBJECT	$ 1000	0	0	0	0	1	5	1	1	0	0	
Unit	**1 :** 5	**Alchl/Drgs:** 0	**Speed:** 60 MPH	**Dir:** E	**Veh Mnvr/Ped Actn:** 4	**Obj Strk:** 59										
913	**105009496**	23.769	02/13/2017 14:20	REAR END, SLOW OR STOP	$ 1800	0	0	0	0	1	1	1	3	0	0	
Unit	**1 :** 5	**Alchl/Drgs:** 0	**Speed:** 45 MPH	**Dir:** E	**Veh Mnvr/Ped Actn:** 4	**Obj Strk:**										
Unit	**2 :** 4	**Alchl/Drgs:** 0	**Speed:** 45 MPH	**Dir:** E	**Veh Mnvr/Ped Actn:** 11	**Obj Strk:**										
914	**105649575**	23.774	10/23/2018 18:26	REAR END, SLOW OR STOP	$ 25000	0	0	0	0	1	1	1	3	0	0	
Unit	**1 :** 4	**Alchl/Drgs:** 0	**Speed:** 45 MPH	**Dir:** E	**Veh Mnvr/Ped Actn:** 4	**Obj Strk:**										
Unit	**2 :** 4	**Alchl/Drgs:** 0	**Speed:** 45 MPH	**Dir:** E	**Veh Mnvr/Ped Actn:** 11	**Obj Strk:**										
915	**105661947**	23.810	11/01/2018 08:30	REAR END, SLOW OR STOP	$ 3500	0	0	0	0	1	1	2	2	0	0	
Unit	**1 :** 4	**Alchl/Drgs:** 0	**Speed:** 30 MPH	**Dir:** W	**Veh Mnvr/Ped Actn:** 4	**Obj Strk:**										
Unit	**2 :** 2	**Alchl/Drgs:** 0	**Speed:** 20 MPH	**Dir:** W	**Veh Mnvr/Ped Actn:** 4	**Obj Strk:**										

All data presented in this report comes explicitly from the Traffic Engineering Accident Analysis System based upon va criteria provided by the report's creator. The onus is strictly upon the user of this report to exercise due diligence in in and further representing this data.

DocuSign Envelope ID: 5C03745C-4B01-4834-A65D-B77F558A4F46

North Carolina Department of Transportation
Traffic Engineering Accident Analysis System
Strip Analysis Report

Acc No	Crash ID	Milepost	Date	Accident Type	Total Damage	Injuries F	A	B	C	Condition R	L	W	Road Ch	Ci	Trfc Ctl Dv	Op
916	**105242720**	23.838	09/30/2017 01:01	FIXED OBJECT	$ 14000	0	0	0	0	1	5	1	3	0	0	
Unit	**1 :** 1	**Alchl/Drgs:** 0	**Speed:** 60 MPH	**Dir:** E	**Veh Mnvr/Ped Actn:** 4	**Obj Strk:** 41										
917	**105559753**	23.844	07/30/2018 06:52	REAR END, SLOW OR STOP	$ 2200	0	0	0	0	1	1	2	5	0	0	
Unit	**1 :** 1	**Alchl/Drgs:** 0	**Speed:** 25 MPH	**Dir:** W	**Veh Mnvr/Ped Actn:** 4	**Obj Strk:**										
Unit	**2 :** 4	**Alchl/Drgs:** 0	**Speed:** 25 MPH	**Dir:** W	**Veh Mnvr/Ped Actn:** 11	**Obj Strk:**										
918	**105658479**	23.844	11/01/2018 10:59	REAR END, SLOW OR STOP	$ 2600	0	0	0	0	1	1	2	2	0	0	
Unit	**1 :** 1	**Alchl/Drgs:** 0	**Speed:** 55 MPH	**Dir:** W	**Veh Mnvr/Ped Actn:** 4	**Obj Strk:**										
Unit	**2 :** 1	**Alchl/Drgs:** 0	**Speed:** 55 MPH	**Dir:** W	**Veh Mnvr/Ped Actn:** 1	**Obj Strk:**										
919	**104164017**	23.855	09/26/2014 08:12	REAR END, SLOW OR STOP	$ 6000	0	0	0	0	1	1	2	1	0	0	
Unit	**1 :** 1	**Alchl/Drgs:** 0	**Speed:** 45 MPH	**Dir:** S	**Veh Mnvr/Ped Actn:** 4	**Obj Strk:**										
Unit	**2 :** 1	**Alchl/Drgs:** 0	**Speed:** 45 MPH	**Dir:** S	**Veh Mnvr/Ped Actn:** 4	**Obj Strk:**										
920	**104191950**	23.855	10/24/2014 12:13	REAR END, SLOW OR STOP	$ 12600	0	0	0	2	1	1	2	1	0	0	
Unit	**1 :** 2	**Alchl/Drgs:** 0	**Speed:** 50 MPH	**Dir:** W	**Veh Mnvr/Ped Actn:** 4	**Obj Strk:**										
Unit	**2 :** 1	**Alchl/Drgs:** 0	**Speed:** 4 MPH	**Dir:** W	**Veh Mnvr/Ped Actn:** 1	**Obj Strk:**										
Unit	**3 :** 1	**Alchl/Drgs:** 0	**Speed:** 0 MPH	**Dir:** W	**Veh Mnvr/Ped Actn:** 1	**Obj Strk:**										
921	**104657577**	23.855	02/25/2016 14:04	REAR END, SLOW OR STOP	$ 6500	0	0	0	1	1	1	2	3	0	0	
Unit	**1 :** 4	**Alchl/Drgs:** 0	**Speed:** 60 MPH	**Dir:** E	**Veh Mnvr/Ped Actn:** 4	**Obj Strk:**										
Unit	**2 :** 4	**Alchl/Drgs:** 0	**Speed:** 60 MPH	**Dir:** E	**Veh Mnvr/Ped Actn:** 11	**Obj Strk:**										
922	**104799420**	23.855	07/23/2016 14:25	REAR END, SLOW OR STOP	$ 5700	0	0	0	3	1	1	1	3	0	0	
Unit	**1 :** 1	**Alchl/Drgs:** 0	**Speed:** 50 MPH	**Dir:** E	**Veh Mnvr/Ped Actn:** 5	**Obj Strk:**										
Unit	**2 :** 4	**Alchl/Drgs:** 0	**Speed:** 50 MPH	**Dir:** E	**Veh Mnvr/Ped Actn:** 11	**Obj Strk:**										
923	**105012643**	23.855	02/16/2017 14:41	SIDESWIPE, SAME DIRECTION	$ 2500	0	0	0	0	1	1	1	1	0	0	
Unit	**1 :** 4	**Alchl/Drgs:** 0	**Speed:** 60 MPH	**Dir:** E	**Veh Mnvr/Ped Actn:** 5	**Obj Strk:**										
Unit	**2 :** 4	**Alchl/Drgs:** 2	**Speed:** 65 MPH	**Dir:** E	**Veh Mnvr/Ped Actn:** 4	**Obj Strk:**										
924	**105084131**	23.855	05/03/2017 21:47	FIXED OBJECT	$ 8000	0	0	0	0	1	5	1	3	0	0	
Unit	**1 :** 1	**Alchl/Drgs:** 0	**Speed:** 60 MPH	**Dir:** W	**Veh Mnvr/Ped Actn:** 4	**Obj Strk:** 18										
Unit	**2 :** 1	**Alchl/Drgs:** 0	**Speed:** 60 MPH	**Dir:** W	**Veh Mnvr/Ped Actn:** 4	**Obj Strk:** 18										
Unit	**3 :** 1	**Alchl/Drgs:** 0	**Speed:** 60 MPH	**Dir:** W	**Veh Mnvr/Ped Actn:** 4	**Obj Strk:** 18										
Unit	**4 :** 1	**Alchl/Drgs:** 0	**Speed:** 60 MPH	**Dir:** W	**Veh Mnvr/Ped Actn:** 4	**Obj Strk:** 18										

DocuSign Envelope ID: 5C03745C-4B01-4834-A65D-B77F558A4F46

North Carolina Department of Transportation
Traffic Engineering Accident Analysis System
Strip Analysis Report

Acc No	Crash ID	Milepost	Date	Accident Type	Total Damage	Injuries F	A	B	C	Condition R	L	W	Road Ch	Ci	Trfc Ctl Dv	Op
925	**105153753**	23.855	07/07/2017 18:47	REAR END, SLOW OR STOP	$ 400	0	0	0	0	1	1	1	1	0	0	
Unit	**1 :** 5	**Alchl/Drgs:**	0	**Speed:**	60 MPH	**Dir:**	W	**Veh Mnvr/Ped Actn:**	4	**Obj Strk:**						
Unit	**2 :** 1	**Alchl/Drgs:**	0	**Speed:**	60 MPH	**Dir:**	W	**Veh Mnvr/Ped Actn:**	11	**Obj Strk:**						
926	**105220554**	23.855	09/11/2017 13:32	REAR END, SLOW OR STOP	$ 6000	0	0	0	0	2	1	3	3	0	0	
Unit	**1 :** 4	**Alchl/Drgs:**	0	**Speed:**	45 MPH	**Dir:**	E	**Veh Mnvr/Ped Actn:**	4	**Obj Strk:**						
Unit	**2 :** 1	**Alchl/Drgs:**	0	**Speed:**	40 MPH	**Dir:**	E	**Veh Mnvr/Ped Actn:**	11	**Obj Strk:**						
927	**105296647**	23.855	11/20/2017 15:55	REAR END, SLOW OR STOP	$ 10000	0	0	0	0	1	1	1	2	0	0	
Unit	**1 :** 2	**Alchl/Drgs:**	0	**Speed:**	50 MPH	**Dir:**	E	**Veh Mnvr/Ped Actn:**	4	**Obj Strk:**						
Unit	**2 :** 1	**Alchl/Drgs:**	0	**Speed:**	40 MPH	**Dir:**	E	**Veh Mnvr/Ped Actn:**	11	**Obj Strk:**						
928	**105629199**	23.855	10/05/2018 14:10	REAR END, SLOW OR STOP	$ 19000	0	0	1	0	1	1	1	3	0	0	
Unit	**1 :** 2	**Alchl/Drgs:**	0	**Speed:**	60 MPH	**Dir:**	S	**Veh Mnvr/Ped Actn:**	4	**Obj Strk:**						
Unit	**2 :** 1	**Alchl/Drgs:**	0	**Speed:**	5 MPH	**Dir:**	S	**Veh Mnvr/Ped Actn:**	11	**Obj Strk:**						
Unit	**3 :** 4	**Alchl/Drgs:**	0	**Speed:**	0 MPH	**Dir:**	S	**Veh Mnvr/Ped Actn:**	1	**Obj Strk:**						
929	**105644115**	23.855	10/20/2018 14:46	REAR END, SLOW OR STOP	$ 4400	0	0	0	0	1	1	1	1	0	0	
Unit	**1 :** 2	**Alchl/Drgs:**	0	**Speed:**	50 MPH	**Dir:**	N	**Veh Mnvr/Ped Actn:**	4	**Obj Strk:**						
Unit	**2 :** 4	**Alchl/Drgs:**	0	**Speed:**	50 MPH	**Dir:**	N	**Veh Mnvr/Ped Actn:**	1	**Obj Strk:**						
Unit	**3 :** 1	**Alchl/Drgs:**	0	**Speed:**	50 MPH	**Dir:**	N	**Veh Mnvr/Ped Actn:**	1	**Obj Strk:**						
930	**105703563**	23.855	12/06/2018 16:47	REAR END, SLOW OR STOP	$ 11000	0	0	1	1	1	5	1	1	0	0	
Unit	**1 :** 1	**Alchl/Drgs:**	0	**Speed:**	30 MPH	**Dir:**	N	**Veh Mnvr/Ped Actn:**	4	**Obj Strk:**						
Unit	**2 :** 5	**Alchl/Drgs:**	0	**Speed:**	30 MPH	**Dir:**	N	**Veh Mnvr/Ped Actn:**	11	**Obj Strk:**						
931	**105107484**	23.888	05/21/2017 03:29	FIXED OBJECT	$ 13000	0	0	0	0	2	5	2	3	0	0	
Unit	**1 :** 14	**Alchl/Drgs:**	0	**Speed:**	60 MPH	**Dir:**	W	**Veh Mnvr/Ped Actn:**	4	**Obj Strk:**	41					
932	**104351077**	23.938	04/16/2015 08:16	REAR END, SLOW OR STOP	$ 7000	0	0	0	0	1	1	1	2	0	0	
Unit	**1 :** 4	**Alchl/Drgs:**	0	**Speed:**	60 MPH	**Dir:**	W	**Veh Mnvr/Ped Actn:**	4	**Obj Strk:**						
Unit	**2 :** 5	**Alchl/Drgs:**	0	**Speed:**	60 MPH	**Dir:**	W	**Veh Mnvr/Ped Actn:**	11	**Obj Strk:**						
Unit	**3 :** 4	**Alchl/Drgs:**	0	**Speed:**	60 MPH	**Dir:**	W	**Veh Mnvr/Ped Actn:**	11	**Obj Strk:**						
933	**104609780**	23.938	01/07/2016 16:40	REAR END, SLOW OR STOP	$ 1500	0	0	0	0	1	1	1	3	0	0	
Unit	**1 :** 1	**Alchl/Drgs:**	0	**Speed:**	35 MPH	**Dir:**	W	**Veh Mnvr/Ped Actn:**	4	**Obj Strk:**						

DocuSign Envelope ID: 5C03745C-4B01-4834-A65D-B77F558A4F46

North Carolina Department of Transportation
Traffic Engineering Accident Analysis System
Strip Analysis Report

Acc No	Crash ID	Milepost	Date	Accident Type	Total Damage	Injuries F	A	B	C	Condition R	L	W	Road Ch	Ci	Trfc Ctl Dv	Op
Unit	**2 :** 2	**Alchl/Drgs:**	0	**Speed:** 35 MPH	**Dir:** W	**Veh Mnvr/Ped Actn:**				1			**Obj Strk:**			
934	**105089160**	23.938	04/26/2017 03:22	SIDESWIPE, OPPOSITE DIRECTION	$ 9000	0	0	0	3	1	5	1	3	0	0	
Unit	**1 :** 5	**Alchl/Drgs:**	1	**Speed:** 60 MPH	**Dir:** W	**Veh Mnvr/Ped Actn:**				4			**Obj Strk:**			
Unit	**2 :** 5	**Alchl/Drgs:**	0	**Speed:** 60 MPH	**Dir:** E	**Veh Mnvr/Ped Actn:**				4			**Obj Strk:**			
935	**105245268**	23.938	10/06/2017 15:23	REAR END, SLOW OR STOP	$ 3000	0	0	0	0	1	1	1	3	0	0	
Unit	**1 :** 1	**Alchl/Drgs:**	0	**Speed:** 30 MPH	**Dir:** E	**Veh Mnvr/Ped Actn:**				4			**Obj Strk:**			
Unit	**2 :** 4	**Alchl/Drgs:**	0	**Speed:** 30 MPH	**Dir:** E	**Veh Mnvr/Ped Actn:**				4			**Obj Strk:**			
936	**104152881**	23.944	09/12/2014 14:46	REAR END, SLOW OR STOP	$ 1300	0	0	0	0	1	1	1	2	0	0	
Unit	**1 :** 4	**Alchl/Drgs:**	0	**Speed:** 20 MPH	**Dir:** W	**Veh Mnvr/Ped Actn:**				1			**Obj Strk:**			
Unit	**2 :** 20	**Alchl/Drgs:**	0	**Speed:** 20 MPH	**Dir:** W	**Veh Mnvr/Ped Actn:**				4			**Obj Strk:**			
937	**104812262**	23.955	08/05/2016 16:16	REAR END, SLOW OR STOP	$ 11200	0	0	0	0	2	1	3	1	0	0	
Unit	**1 :** 4	**Alchl/Drgs:**	7	**Speed:** 60 MPH	**Dir:** E	**Veh Mnvr/Ped Actn:**				4			**Obj Strk:**			
Unit	**2 :** 1	**Alchl/Drgs:**	0	**Speed:** 0 MPH	**Dir:** E	**Veh Mnvr/Ped Actn:**				1			**Obj Strk:**			
Unit	**3 :** 5	**Alchl/Drgs:**	0	**Speed:** 0 MPH	**Dir:** E	**Veh Mnvr/Ped Actn:**				1			**Obj Strk:**			
938	**105103457**	23.955	05/17/2017 17:02	REAR END, SLOW OR STOP	$ 2000	0	0	0	0	1	1	1	1	0	0	
Unit	**1 :** 1	**Alchl/Drgs:**	0	**Speed:** 55 MPH	**Dir:** E	**Veh Mnvr/Ped Actn:**				4			**Obj Strk:**			
Unit	**2 :** 4	**Alchl/Drgs:**	0	**Speed:** 55 MPH	**Dir:** E	**Veh Mnvr/Ped Actn:**				11			**Obj Strk:**			
939	**105534065**	23.955	07/06/2018 14:44	REAR END, SLOW OR STOP	$ 1700	0	0	0	0	1	1	2	3	0	0	
Unit	**1 :** 1	**Alchl/Drgs:**	0	**Speed:** 45 MPH	**Dir:** N	**Veh Mnvr/Ped Actn:**				4			**Obj Strk:**			
Unit	**2 :** 1	**Alchl/Drgs:**	0	**Speed:** 45 MPH	**Dir:** N	**Veh Mnvr/Ped Actn:**				1			**Obj Strk:**			
940	**104051501**	24.005	05/05/2014 15:10	OTHER NON-COLLISION	$ 8500	0	0	0	0	1	1	1	3	0	0	
Unit	**1 :** 14	**Alchl/Drgs:**	0	**Speed:** 60 MPH	**Dir:** N	**Veh Mnvr/Ped Actn:**				4			**Obj Strk:**			
941	**104396654**	24.038	06/02/2015 07:50	REAR END, SLOW OR STOP	$ 2000	0	0	0	0	2	1	2	2	0	0	
Unit	**1 :** 1	**Alchl/Drgs:**	0	**Speed:** 50 MPH	**Dir:** W	**Veh Mnvr/Ped Actn:**				4			**Obj Strk:**			
Unit	**2 :** 1	**Alchl/Drgs:**	0	**Speed:** 50 MPH	**Dir:** W	**Veh Mnvr/Ped Actn:**				1			**Obj Strk:**			
942	**104396653**	24.038	06/02/2015 07:51	REAR END, SLOW OR STOP	$ 2000	0	0	0	0	2	1	2	2	0	0	
Unit	**1 :** 2	**Alchl/Drgs:**	0	**Speed:** 55 MPH	**Dir:** W	**Veh Mnvr/Ped Actn:**				4			**Obj Strk:**			
Unit	**2 :** 1	**Alchl/Drgs:**	0	**Speed:** 50 MPH	**Dir:** W	**Veh Mnvr/Ped Actn:**				1			**Obj Strk:**			

DocuSign Envelope ID: 5C03745C-4B01-4834-A65D-B77F558A4F46

North Carolina Department of Transportation
Traffic Engineering Accident Analysis System
Strip Analysis Report

Acc No	Crash ID	Milepost	Date	Accident Type	Total Damage	Injuries F	A	B	C	Condition R	L	W	Road Ch	Ci	Trfc Ctl Dv	Op
943	**104518391**	24.038	10/10/2015 11:46	REAR END, SLOW OR STOP	$ 2200	0	0	0	0	2	1	2	3	0	0	
Unit	**1 :** 1	**Alchl/Drgs:** 0	**Speed:** 20 MPH	**Dir:** W	**Veh Mnvr/Ped Actn:** 11	**Obj Strk:**										
Unit	**2 :** 4	**Alchl/Drgs:** 0	**Speed:** 15 MPH	**Dir:** W	**Veh Mnvr/Ped Actn:** 1	**Obj Strk:**										
944	**104748283**	24.038	05/23/2016 17:02	REAR END, SLOW OR STOP	$ 3500	0	0	0	0	1	1	1	3	0	0	
Unit	**1 :** 1	**Alchl/Drgs:** 0	**Speed:** 50 MPH	**Dir:** W	**Veh Mnvr/Ped Actn:** 11	**Obj Strk:**										
Unit	**2 :** 4	**Alchl/Drgs:** 0	**Speed:** 60 MPH	**Dir:** W	**Veh Mnvr/Ped Actn:** 11	**Obj Strk:**										
945	**105532338**	24.038	07/01/2018 14:28	REAR END, SLOW OR STOP	$ 10000	0	0	0	1	1	1	1	2	0	0	
Unit	**1 :** 1	**Alchl/Drgs:** 0	**Speed:** 60 MPH	**Dir:** E	**Veh Mnvr/Ped Actn:** 4	**Obj Strk:**										
Unit	**2 :** 4	**Alchl/Drgs:** 0	**Speed:** 60 MPH	**Dir:** E	**Veh Mnvr/Ped Actn:** 1	**Obj Strk:**										
946	**105528846**	24.038	07/01/2018 14:29	REAR END, SLOW OR STOP	$ 16000	0	0	0	2	1	1	1	2	0	0	
Unit	**1 :** 1	**Alchl/Drgs:** 0	**Speed:** 60 MPH	**Dir:** E	**Veh Mnvr/Ped Actn:** 4	**Obj Strk:**										
Unit	**2 :** 1	**Alchl/Drgs:** 0	**Speed:** 60 MPH	**Dir:** E	**Veh Mnvr/Ped Actn:** 1	**Obj Strk:**										
947	**104335179**	24.044	03/30/2015 17:57	REAR END, SLOW OR STOP	$ 5000	0	0	0	0	1	1	1	3	0	0	
Unit	**1 :** 1	**Alchl/Drgs:** 0	**Speed:** 25 MPH	**Dir:** NW	**Veh Mnvr/Ped Actn:** 1	**Obj Strk:**										
Unit	**2 :** 1	**Alchl/Drgs:** 0	**Speed:** 40 MPH	**Dir:** NW	**Veh Mnvr/Ped Actn:** 4	**Obj Strk:**										
948	**105069398**	24.055	04/14/2017 13:46	OTHER COLLISION WITH VEHICLE	$ 7900	0	0	0	0	1	1	1	1	0	0	
Unit	**1 :** 1	**Alchl/Drgs:** 0	**Speed:** 45 MPH	**Dir:** W	**Veh Mnvr/Ped Actn:** 4	**Obj Strk:**										
Unit	**2 :** 4	**Alchl/Drgs:** 0	**Speed:** 40 MPH	**Dir:** W	**Veh Mnvr/Ped Actn:** 4	**Obj Strk:**										
949	**105166533**	24.055	07/16/2017 15:37	REAR END, SLOW OR STOP	$ 2000	0	0	0	0	1	1	1	1	0	0	
Unit	**1 :** 1	**Alchl/Drgs:** 0	**Speed:** 45 MPH	**Dir:** E	**Veh Mnvr/Ped Actn:** 4	**Obj Strk:**										
Unit	**2 :** 1	**Alchl/Drgs:** 0	**Speed:** 0 MPH	**Dir:** E	**Veh Mnvr/Ped Actn:** 1	**Obj Strk:**										
950	**105308233**	24.055	12/02/2017 13:15	PARKED MOTOR VEHICLE	$ 21000	0	0	0	0	1	1	1	1	0	0	
Unit	**1 :** 1	**Alchl/Drgs:** 7	**Speed:** 0 MPH	**Dir:** E	**Veh Mnvr/Ped Actn:** 3	**Obj Strk:** 20										
Unit	**2 :** 2	**Alchl/Drgs:** 0	**Speed:** 60 MPH	**Dir:** E	**Veh Mnvr/Ped Actn:** 4	**Obj Strk:** 20										
Unit	**3 :** 4	**Alchl/Drgs:** 0	**Speed:** 55 MPH	**Dir:** E	**Veh Mnvr/Ped Actn:** 4	**Obj Strk:** 20										
951	**103951439**	24.138	01/14/2014 07:51	REAR END, SLOW OR STOP	$ 1200	0	0	0	1	2	1	2	3	0	0	
Unit	**1 :** 4	**Alchl/Drgs:** 0	**Speed:** 55 MPH	**Dir:** W	**Veh Mnvr/Ped Actn:** 4	**Obj Strk:**										
Unit	**2 :** 4	**Alchl/Drgs:** 0	**Speed:** 55 MPH	**Dir:** W	**Veh Mnvr/Ped Actn:** 11	**Obj Strk:**										

DocuSign Envelope ID: 5C03745C-4B01-4834-A65D-B77F558A4F46

North Carolina Department of Transportation
Traffic Engineering Accident Analysis System
Strip Analysis Report

Acc No	Crash ID	Milepost	Date	Accident Type	Total Damage	Injuries F	A	B	C	Condition R	L	W	Road Ch	Ci	Trfc Ctl Dv	Op
952	**104050857**	24.138	04/21/2014 08:55	REAR END, SLOW OR STOP	$ 150	0	0	0	0	1	1	1	2	0	0	
Unit	**1 :** 2	**Alchl/Drgs:** 0	**Speed:** 35 MPH	**Dir:** W	**Veh Mnvr/Ped Actn:** 11	**Obj Strk:**										
Unit	**2 :** 4	**Alchl/Drgs:** 0	**Speed:** 35 MPH	**Dir:** W	**Veh Mnvr/Ped Actn:** 11	**Obj Strk:**										
953	**104075600**	24.138	06/06/2014 15:32	REAR END, SLOW OR STOP	$ 1100	0	0	0	0	1	1	2	3	0	0	
Unit	**1 :** 2	**Alchl/Drgs:** 0	**Speed:** 30 MPH	**Dir:** N	**Veh Mnvr/Ped Actn:** 4	**Obj Strk:**										
Unit	**2 :** 1	**Alchl/Drgs:** 0	**Speed:** 30 MPH	**Dir:** N	**Veh Mnvr/Ped Actn:** 11	**Obj Strk:**										
954	**104283284**	24.138	01/30/2015 11:24	SIDESWIPE, SAME DIRECTION	$ 2800	0	0	0	0	1	1	2	3	0	0	
Unit	**1 :** 4	**Alchl/Drgs:** 0	**Speed:** 55 MPH	**Dir:** E	**Veh Mnvr/Ped Actn:** 5	**Obj Strk:**										
Unit	**2 :** 1	**Alchl/Drgs:** 0	**Speed:** 55 MPH	**Dir:** E	**Veh Mnvr/Ped Actn:** 4	**Obj Strk:**										
955	**104356097**	24.138	04/21/2015 22:35	OVERTURN/ROLLOVER	$ 6000	0	0	0	0	1	5	1	5	0	0	
Unit	**1 :** 4	**Alchl/Drgs:** 7	**Speed:** 70 MPH	**Dir:** S	**Veh Mnvr/Ped Actn:** 4	**Obj Strk:**										
956	**104780072**	24.138	07/01/2016 22:00	ANIMAL	$ 2000	0	0	0	0	1	1	1	3	0	0	
Unit	**1 :** 10	**Alchl/Drgs:** 0	**Speed:** 60 MPH	**Dir:** E	**Veh Mnvr/Ped Actn:** 4	**Obj Strk:** 17										
957	**104812120**	24.138	08/06/2016 15:23	REAR END, SLOW OR STOP	$ 10000	0	0	0	0	1	1	1	1	0	0	
Unit	**1 :** 1	**Alchl/Drgs:** 0	**Speed:** 45 MPH	**Dir:** N	**Veh Mnvr/Ped Actn:** 4	**Obj Strk:**										
Unit	**2 :** 4	**Alchl/Drgs:** 0	**Speed:** 35 MPH	**Dir:** N	**Veh Mnvr/Ped Actn:** 11	**Obj Strk:**										
Unit	**3 :** 2	**Alchl/Drgs:** 0	**Speed:** 30 MPH	**Dir:** N	**Veh Mnvr/Ped Actn:** 11	**Obj Strk:**										
958	**104847370**	24.138	09/12/2016 08:46	REAR END, SLOW OR STOP	$ 9000	0	0	0	0	1	1	1	3	0	0	
Unit	**1 :** 4	**Alchl/Drgs:** 0	**Speed:** 35 MPH	**Dir:** S	**Veh Mnvr/Ped Actn:** 4	**Obj Strk:**										
Unit	**2 :** 1	**Alchl/Drgs:** 0	**Speed:** 0 MPH	**Dir:** S	**Veh Mnvr/Ped Actn:** 1	**Obj Strk:**										
959	**105040271**	24.138	03/16/2017 16:44	REAR END, SLOW OR STOP	$ 3300	0	0	0	0	1	1	1	3	0	0	
Unit	**1 :** 1	**Alchl/Drgs:** 0	**Speed:** 60 MPH	**Dir:** W	**Veh Mnvr/Ped Actn:** 4	**Obj Strk:**										
Unit	**2 :** 1	**Alchl/Drgs:** 0	**Speed:** 60 MPH	**Dir:** W	**Veh Mnvr/Ped Actn:** 11	**Obj Strk:**										
960	**105156086**	24.138	07/08/2017 15:27	OVERTURN/ROLLOVER	$ 3000	0	0	1	0	2	1	3	3	0	0	
Unit	**1 :** 20	**Alchl/Drgs:** 0	**Speed:** 45 MPH	**Dir:** E	**Veh Mnvr/Ped Actn:** 4	**Obj Strk:**										

DocuSign Envelope ID: 5C03745C-4B01-4834-A65D-B77F558A4F46

North Carolina Department of Transportation
Traffic Engineering Accident Analysis System
Strip Analysis Report

Acc No	Crash ID	Milepost	Date	Accident Type	Total Damage	Injuries F	A	B	C	Condition R	L	W	Road Ch	Ci	Trfc Ctl Dv	Op
961	**105192256**	24.138	08/16/2017 16:13	REAR END, SLOW OR STOP	$ 6000	0	0	0	0	1	1	1	3	0	0	
Unit	**1 :** 4	**Alchl/Drgs:** 0	**Speed:** 60 MPH	**Dir:** W	**Veh Mnvr/Ped Actn:** 4	**Obj Strk:**										
Unit	**2 :** 1	**Alchl/Drgs:** 0	**Speed:** 60 MPH	**Dir:** W	**Veh Mnvr/Ped Actn:** 11	**Obj Strk:**										
962	**105198430**	24.138	08/21/2017 23:50	ANIMAL	$ 1800	0	0	0	0	1	5	1	1	0	0	
Unit	**1 :** 4	**Alchl/Drgs:** 0	**Speed:** 60 MPH	**Dir:** W	**Veh Mnvr/Ped Actn:** 4	**Obj Strk:** 17										
963	**105233499**	24.138	09/26/2017 12:14	SIDESWIPE, SAME DIRECTION	$ 4000	0	0	0	0	1	1	1	7	0	0	
Unit	**1 :** 12	**Alchl/Drgs:** 0	**Speed:** 55 MPH	**Dir:** W	**Veh Mnvr/Ped Actn:** 4	**Obj Strk:**										
Unit	**2 :** 4	**Alchl/Drgs:** 0	**Speed:** 10 MPH	**Dir:** W	**Veh Mnvr/Ped Actn:** 5	**Obj Strk:**										
964	**105307784**	24.138	11/29/2017 18:21	BACKING UP	$ 2550	0	0	0	0	1	5	1	3	0	0	
Unit	**1 :** 14	**Alchl/Drgs:** 0	**Speed:** 5 MPH	**Dir:** W	**Veh Mnvr/Ped Actn:** 10	**Obj Strk:**										
Unit	**2 :** 1	**Alchl/Drgs:** 0	**Speed:** 5 MPH	**Dir:** W	**Veh Mnvr/Ped Actn:** 1	**Obj Strk:**										
Unit	**3 :** 1	**Alchl/Drgs:** 7	**Speed:** 5 MPH	**Dir:** W	**Veh Mnvr/Ped Actn:** 1	**Obj Strk:**										
965	**105313740**	24.138	12/06/2017 11:46	SIDESWIPE, SAME DIRECTION	$ 2500	0	0	0	0	1	1	1	3	0	0	
Unit	**1 :** 5	**Alchl/Drgs:** 0	**Speed:** 60 MPH	**Dir:** W	**Veh Mnvr/Ped Actn:** 5	**Obj Strk:**										
Unit	**2 :** 4	**Alchl/Drgs:** 0	**Speed:** 60 MPH	**Dir:** W	**Veh Mnvr/Ped Actn:** 4	**Obj Strk:**										
966	**105492381**	24.138	05/26/2018 14:39	REAR END, SLOW OR STOP	$ 2100	0	0	0	0	2	1	2	3	0	0	
Unit	**1 :** 1	**Alchl/Drgs:** 0	**Speed:** 45 MPH	**Dir:** N	**Veh Mnvr/Ped Actn:** 4	**Obj Strk:**										
Unit	**2 :** 1	**Alchl/Drgs:** 0	**Speed:** 45 MPH	**Dir:** N	**Veh Mnvr/Ped Actn:** 1	**Obj Strk:**										
967	**105528825**	24.138	07/01/2018 14:29	REAR END, SLOW OR STOP	$ 3400	0	0	0	0	1	1	1	3	0	0	
Unit	**1 :** 4	**Alchl/Drgs:** 0	**Speed:** 50 MPH	**Dir:** S	**Veh Mnvr/Ped Actn:** 4	**Obj Strk:**										
Unit	**2 :** 4	**Alchl/Drgs:** 0	**Speed:** 55 MPH	**Dir:** S	**Veh Mnvr/Ped Actn:** 1	**Obj Strk:**										
Unit	**3 :** 1	**Alchl/Drgs:** 0	**Speed:** 55 MPH	**Dir:** S	**Veh Mnvr/Ped Actn:** 1	**Obj Strk:**										
968	**105562039**	24.138	08/05/2018 14:27	REAR END, SLOW OR STOP	$ 4500	0	0	0	0	1	1	1	3	0	0	
Unit	**1 :** 1	**Alchl/Drgs:** 0	**Speed:** 30 MPH	**Dir:** N	**Veh Mnvr/Ped Actn:** 4	**Obj Strk:**										
Unit	**2 :** 4	**Alchl/Drgs:** 0	**Speed:** 0 MPH	**Dir:** N	**Veh Mnvr/Ped Actn:** 1	**Obj Strk:**										
969	**105570089**	24.138	08/12/2018 20:30	OVERTURN/ROLLOVER	$ 1500	0	0	0	0	1	5	1	7	0	0	
Unit	**1 :** 1	**Alchl/Drgs:** 0	**Speed:** 60 MPH	**Dir:** E	**Veh Mnvr/Ped Actn:** 4	**Obj Strk:** 58										

DocuSign Envelope ID: 5C03745C-4B01-4834-A65D-B77F558A4F46

North Carolina Department of Transportation
Traffic Engineering Accident Analysis System
Strip Analysis Report

Acc No	Crash ID	Milepost	Date	Accident Type	Total Damage	Injuries F	A	B	C	Condition R	L	W	Road Ch	Ci	Trfc Ctl Dv	Op
970	**105585879**	24.138	08/28/2018 07:56	REAR END, SLOW OR STOP	$ 3700	0	0	0	0	1	1	1	7	0	0	
Unit	**1 :** 1	**Alchl/Drgs:** 0	**Speed:** 50 MPH	**Dir:** N	**Veh Mnvr/Ped Actn:** 5	**Obj Strk:**										
Unit	**2 :** 2	**Alchl/Drgs:** 0	**Speed:** 55 MPH	**Dir:** N	**Veh Mnvr/Ped Actn:** 11	**Obj Strk:**										
971	**105639951**	24.138	10/15/2018 13:52	REAR END, SLOW OR STOP	$ 8000	0	0	0	0	1	1	1	3	0	0	
Unit	**1 :** 4	**Alchl/Drgs:** 0	**Speed:** 60 MPH	**Dir:** W	**Veh Mnvr/Ped Actn:** 4	**Obj Strk:**										
Unit	**2 :** 2	**Alchl/Drgs:** 0	**Speed:** 0 MPH	**Dir:** W	**Veh Mnvr/Ped Actn:** 1	**Obj Strk:**										
972	**105687010**	24.138	11/24/2018 12:38	REAR END, SLOW OR STOP	$ 1000	0	0	0	0	1	1	1	1	0	0	
Unit	**1 :** 1	**Alchl/Drgs:** 0	**Speed:** 25 MPH	**Dir:** W	**Veh Mnvr/Ped Actn:** 11	**Obj Strk:**										
Unit	**2 :** 1	**Alchl/Drgs:** 0	**Speed:** 0 MPH	**Dir:** W	**Veh Mnvr/Ped Actn:** 1	**Obj Strk:**										
973	**105105545**	24.144	05/21/2017 13:35	FIXED OBJECT	$ 12000	0	0	0	0	2	1	3	1	0	0	
Unit	**1 :** 1	**Alchl/Drgs:** 0	**Speed:** 55 MPH	**Dir:** W	**Veh Mnvr/Ped Actn:** 4	**Obj Strk:** 58										
974	**105670583**	24.144	11/09/2018 17:15	REAR END, SLOW OR STOP	$ 3000	0	0	0	0	1	2	2	3	0	0	
Unit	**1 :** 1	**Alchl/Drgs:** 0	**Speed:** 40 MPH	**Dir:** W	**Veh Mnvr/Ped Actn:** 1	**Obj Strk:**										
Unit	**2 :** 2	**Alchl/Drgs:** 0	**Speed:** 40 MPH	**Dir:** W	**Veh Mnvr/Ped Actn:** 4	**Obj Strk:**										
975	**105229403**	24.155	09/21/2017 19:56	REAR END, SLOW OR STOP	$ 1000	0	0	0	0	1	5	2	7	0	0	
Unit	**1 :** 1	**Alchl/Drgs:** 0	**Speed:** 10 MPH	**Dir:** W	**Veh Mnvr/Ped Actn:** 4	**Obj Strk:**										
Unit	**2 :** 2	**Alchl/Drgs:** 0	**Speed:** 10 MPH	**Dir:** W	**Veh Mnvr/Ped Actn:** 4	**Obj Strk:**										
976	**104725454**	24.237	05/03/2016 11:36	REAR END, SLOW OR STOP	$ 56000	0	0	3	2	1	1	1	3	0	0	
Unit	**1 :** 10	**Alchl/Drgs:** 0	**Speed:** 70 MPH	**Dir:** N	**Veh Mnvr/Ped Actn:** 4	**Obj Strk:**										
Unit	**2 :** 4	**Alchl/Drgs:** 0	**Speed:** 30 MPH	**Dir:** N	**Veh Mnvr/Ped Actn:** 4	**Obj Strk:** 48										
Unit	**3 :** 4	**Alchl/Drgs:** 0	**Speed:** 30 MPH	**Dir:** N	**Veh Mnvr/Ped Actn:** 4	**Obj Strk:** 42										
Unit	**4 :** 1	**Alchl/Drgs:** 0	**Speed:** 0 MPH	**Dir:** N	**Veh Mnvr/Ped Actn:** 1	**Obj Strk:**										
Unit	**5 :** 1	**Alchl/Drgs:** 0	**Speed:** 0 MPH	**Dir:** N	**Veh Mnvr/Ped Actn:** 1	**Obj Strk:**										
Unit	**6 :** 14	**Alchl/Drgs:** 0	**Speed:** 0 MPH	**Dir:** N	**Veh Mnvr/Ped Actn:** 4	**Obj Strk:**										
977	**104098385**	24.238	06/30/2014 16:51	REAR END, SLOW OR STOP	$ 1000	0	0	0	0	1	1	1	3	0	0	
Unit	**1 :** 1	**Alchl/Drgs:** 0	**Speed:** 60 MPH	**Dir:** W	**Veh Mnvr/Ped Actn:** 5	**Obj Strk:**										
Unit	**2 :** 1	**Alchl/Drgs:** 0	**Speed:** 60 MPH	**Dir:** W	**Veh Mnvr/Ped Actn:** 1	**Obj Strk:**										
978	**104566169**	24.238	11/23/2015 18:15	FIXED OBJECT	$ 4000	0	0	0	0	1	5	1	7	0	0	
Unit	**1 :** 1	**Alchl/Drgs:** 0	**Speed:** 60 MPH	**Dir:** S	**Veh Mnvr/Ped Actn:** 4	**Obj Strk:** 41										

DocuSign Envelope ID: 5C03745C-4B01-4834-A65D-B77F558A4F46

North Carolina Department of Transportation
Traffic Engineering Accident Analysis System
Strip Analysis Report

Acc No	Crash ID	Milepost	Date	Accident Type	Total Damage	Injuries F	A	B	C	Condition R	L	W	Road Ch	Ci	Trfc Ctl Dv	Op
979	**104961353**	24.238	12/28/2016 13:54	REAR END, SLOW OR STOP	$ 3000	0	0	0	0	1	1	1	3	0	0	
Unit	**1 :** 1	**Alchl/Drgs:** 0	**Speed:** 50 MPH	**Dir:** N	**Veh Mnvr/Ped Actn:** 4	**Obj Strk:**										
Unit	**2 :** 1	**Alchl/Drgs:** 0	**Speed:** 0 MPH	**Dir:** N	**Veh Mnvr/Ped Actn:** 1	**Obj Strk:**										
980	**105127501**	24.238	06/09/2017 18:15	REAR END, SLOW OR STOP	$ 600	0	0	0	2	1	1	1	3	0	0	
Unit	**1 :** 2	**Alchl/Drgs:** 0	**Speed:** 25 MPH	**Dir:** W	**Veh Mnvr/Ped Actn:** 11	**Obj Strk:**										
Unit	**2 :** 4	**Alchl/Drgs:** 0	**Speed:** 25 MPH	**Dir:** W	**Veh Mnvr/Ped Actn:** 11	**Obj Strk:**										
981	**105229669**	24.253	09/22/2017 23:09	REAR END, SLOW OR STOP	$ 10500	0	0	0	0	1	5	1	3	0	0	
Unit	**1 :** 1	**Alchl/Drgs:** 0	**Speed:** 55 MPH	**Dir:** W	**Veh Mnvr/Ped Actn:** 4	**Obj Strk:**										
Unit	**2 :** 2	**Alchl/Drgs:** 0	**Speed:** 55 MPH	**Dir:** W	**Veh Mnvr/Ped Actn:** 11	**Obj Strk:**										
982	**103968988**	24.255	02/04/2014 16:57	REAR END, SLOW OR STOP	$ 5000	0	0	0	0	1	1	2	3	0	0	
Unit	**1 :** 1	**Alchl/Drgs:** 0	**Speed:** 55 MPH	**Dir:** N	**Veh Mnvr/Ped Actn:** 4	**Obj Strk:**										
Unit	**2 :** 2	**Alchl/Drgs:** 0	**Speed:** 55 MPH	**Dir:** N	**Veh Mnvr/Ped Actn:** 4	**Obj Strk:**										
983	**104182152**	24.255	10/14/2014 20:06	FIXED OBJECT	$ 7000	0	0	0	0	2	5	3	1	0	0	
Unit	**1 :** 1	**Alchl/Drgs:** 0	**Speed:** 60 MPH	**Dir:** S	**Veh Mnvr/Ped Actn:** 4	**Obj Strk:** 44										
984	**104182153**	24.255	10/14/2014 20:12	FIXED OBJECT	$ 7500	0	0	0	0	2	5	3	1	0	0	
Unit	**1 :** 1	**Alchl/Drgs:** 0	**Speed:** 60 MPH	**Dir:** S	**Veh Mnvr/Ped Actn:** 4	**Obj Strk:** 44										
985	**104323226**	24.255	03/13/2015 18:00	REAR END, SLOW OR STOP	$ 700	0	0	0	0	2	1	3	1	0	0	
Unit	**1 :** 1	**Alchl/Drgs:** 0	**Speed:** 15 MPH	**Dir:** S	**Veh Mnvr/Ped Actn:** 4	**Obj Strk:**										
Unit	**2 :** 1	**Alchl/Drgs:** 0	**Speed:** 15 MPH	**Dir:** S	**Veh Mnvr/Ped Actn:** 11	**Obj Strk:**										
986	**104328101**	24.255	03/17/2015 17:09	SIDESWIPE, SAME DIRECTION	$ 8500	0	0	0	0	1	1	1	1	0	0	
Unit	**1 :** 5	**Alchl/Drgs:** 0	**Speed:** 60 MPH	**Dir:** W	**Veh Mnvr/Ped Actn:** 4	**Obj Strk:**										
Unit	**2 :** 5	**Alchl/Drgs:** 0	**Speed:** 45 MPH	**Dir:** W	**Veh Mnvr/Ped Actn:** 4	**Obj Strk:**										
987	**104349913**	24.255	04/13/2015 17:56	REAR END, SLOW OR STOP	$ 3000	0	0	0	0	2	1	3	1	0	0	
Unit	**1 :** 14	**Alchl/Drgs:** 0	**Speed:** 20 MPH	**Dir:** W	**Veh Mnvr/Ped Actn:** 4	**Obj Strk:**										
Unit	**2 :** 1	**Alchl/Drgs:** 0	**Speed:** 20 MPH	**Dir:** W	**Veh Mnvr/Ped Actn:** 11	**Obj Strk:**										

All data presented in this report comes explicitly from the Traffic Engineering Accident Analysis System based upon va criteria provided by the report's creator. The onus is strictly upon the user of this report to exercise due diligence in in and further representing this data.

DocuSign Envelope ID: 5C03745C-4B01-4834-A65D-B77F558A4F46

North Carolina Department of Transportation
Traffic Engineering Accident Analysis System
Strip Analysis Report

Acc No	Crash ID	Milepost	Date	Accident Type	Total Damage	Injuries F	A	B	C	Condition R	L	W	Road Ch	Ci	Trfc Ctl Dv	Op
988	**104379974**	24.255	05/15/2015 17:32	REAR END, SLOW OR STOP	$ 500	0	0	0	0	1	1	1	1	0	0	
Unit	**1 :** 2	**Alchl/Drgs:** 0	**Speed:** 60 MPH	**Dir:** W	**Veh Mnvr/Ped Actn:** 4	**Obj Strk:**										
Unit	**2 :** 1	**Alchl/Drgs:** 0	**Speed:** 60 MPH	**Dir:** W	**Veh Mnvr/Ped Actn:** 1	**Obj Strk:**										
989	**104413457**	24.255	06/16/2015 20:16	FIXED OBJECT	$ 5000	0	0	0	0	2	1	3	1	0	0	
Unit	**1 :** 1	**Alchl/Drgs:** 0	**Speed:** 55 MPH	**Dir:** W	**Veh Mnvr/Ped Actn:** 4	**Obj Strk:** 42										
990	**104446046**	24.255	07/28/2015 14:50	REAR END, SLOW OR STOP	$ 1000	0	0	0	0	1	1	1	7	0	0	
Unit	**1 :** 10	**Alchl/Drgs:** 0	**Speed:** 55 MPH	**Dir:** S	**Veh Mnvr/Ped Actn:** 4	**Obj Strk:**										
Unit	**2 :** 2	**Alchl/Drgs:** 0	**Speed:** 60 MPH	**Dir:** S	**Veh Mnvr/Ped Actn:** 4	**Obj Strk:**										
991	**104482263**	24.255	08/21/2015 17:52	REAR END, SLOW OR STOP	$ 3000	0	0	0	0	1	1	1	1	0	0	
Unit	**1 :** 4	**Alchl/Drgs:** 0	**Speed:** 60 MPH	**Dir:** W	**Veh Mnvr/Ped Actn:** 5	**Obj Strk:**										
Unit	**2 :** 2	**Alchl/Drgs:** 0	**Speed:** 60 MPH	**Dir:** W	**Veh Mnvr/Ped Actn:** 1	**Obj Strk:**										
992	**104572676**	24.255	11/30/2015 03:13	ANIMAL	$ 3000	0	0	0	0	2	5	3	1	0	0	
Unit	**1 :** 4	**Alchl/Drgs:** 0	**Speed:** 60 MPH	**Dir:** W	**Veh Mnvr/Ped Actn:** 4	**Obj Strk:** 17										
993	**104726350**	24.255	05/06/2016 17:25	REAR END, SLOW OR STOP	$ 800	0	0	0	0	1	1	1	1	0	0	
Unit	**1 :** 1	**Alchl/Drgs:** 0	**Speed:** 45 MPH	**Dir:** E	**Veh Mnvr/Ped Actn:** 4	**Obj Strk:**										
Unit	**2 :** 1	**Alchl/Drgs:** 0	**Speed:** 45 MPH	**Dir:** E	**Veh Mnvr/Ped Actn:** 11	**Obj Strk:**										
994	**104860616**	24.255	09/24/2016 17:03	OVERTURN/ROLLOVER	$ 800	0	0	0	0	1	1	1	3	0	0	
Unit	**1 :** 20	**Alchl/Drgs:** 0	**Speed:** 60 MPH	**Dir:** E	**Veh Mnvr/Ped Actn:** 4	**Obj Strk:**										
995	**104931925**	24.255	12/01/2016 08:19	REAR END, SLOW OR STOP	$ 5700	0	0	0	0	1	1	1	3	0	0	
Unit	**1 :** 1	**Alchl/Drgs:** 0	**Speed:** 55 MPH	**Dir:** W	**Veh Mnvr/Ped Actn:** 4	**Obj Strk:**										
Unit	**2 :** 1	**Alchl/Drgs:** 0	**Speed:** 55 MPH	**Dir:** W	**Veh Mnvr/Ped Actn:** 11	**Obj Strk:**										
Unit	**3 :** 2	**Alchl/Drgs:** 0	**Speed:** 55 MPH	**Dir:** W	**Veh Mnvr/Ped Actn:** 11	**Obj Strk:**										
996	**104948427**	24.255	12/15/2016 17:10	REAR END, SLOW OR STOP	$ 2500	0	0	0	2	1	5	1	2	0	0	
Unit	**1 :** 1	**Alchl/Drgs:** 0	**Speed:** 40 MPH	**Dir:** W	**Veh Mnvr/Ped Actn:** 4	**Obj Strk:**										
Unit	**2 :** 1	**Alchl/Drgs:** 0	**Speed:** 0 MPH	**Dir:** W	**Veh Mnvr/Ped Actn:** 1	**Obj Strk:**										
997	**104961377**	24.255	12/28/2016 17:34	REAR END, SLOW OR STOP	$ 3500	0	0	0	0	1	4	1	1	0	0	
Unit	**1 :** 1	**Alchl/Drgs:** 0	**Speed:** 55 MPH	**Dir:** E	**Veh Mnvr/Ped Actn:** 11	**Obj Strk:**										

All data presented in this report comes explicitly from the Traffic Engineering Accident Analysis System based upon va criteria provided by the report's creator. The onus is strictly upon the user of this report to exercise due diligence in in and further representing this data.

DocuSign Envelope ID: 5C03745C-4B01-4834-A65D-B77F558A4F46

North Carolina Department of Transportation
Traffic Engineering Accident Analysis System
Strip Analysis Report

Acc No	Crash ID	Milepost	Date	Accident Type	Total Damage	Injuries F	A	B	C	Condition R	L	W	Road Ch	Ci	Trfc Ctl Dv	Op
Unit	**2 :** 4	**Alchl/Drgs:**	0	**Speed:** 55 MPH	**Dir:** E	**Veh Mnvr/Ped Actn:**				11			**Obj Strk:**			
998	**104973098**	24.255	01/11/2017 15:32	REAR END, SLOW OR STOP	$ 2000	0	0	0	0	1	1	1	1	0	0	
Unit	**1 :** 1	**Alchl/Drgs:**	0	**Speed:** 60 MPH	**Dir:** W	**Veh Mnvr/Ped Actn:**				4			**Obj Strk:**			
Unit	**2 :** 1	**Alchl/Drgs:**	0	**Speed:** 60 MPH	**Dir:** W	**Veh Mnvr/Ped Actn:**				11			**Obj Strk:**			
999	**105168642**	24.255	07/22/2017 13:05	MOVABLE OBJECT	$ 8000	0	0	0	0	1	1	1	1	0	0	
Unit	**1 :** 14	**Alchl/Drgs:**	0	**Speed:** 60 MPH	**Dir:** W	**Veh Mnvr/Ped Actn:**				4			**Obj Strk:**		18	
1000	**105172027**	24.255	07/23/2017 16:24	REAR END, SLOW OR STOP	$ 3000	0	0	0	0	1	1	1	1	0	0	
Unit	**1 :** 3	**Alchl/Drgs:**	0	**Speed:** 55 MPH	**Dir:** E	**Veh Mnvr/Ped Actn:**				4			**Obj Strk:**			
Unit	**2 :** 1	**Alchl/Drgs:**	0	**Speed:** 10 MPH	**Dir:** E	**Veh Mnvr/Ped Actn:**				11			**Obj Strk:**			
1001	**105172026**	24.255	07/23/2017 16:25	REAR END, SLOW OR STOP	$ 3500	0	0	0	0	1	1	1	1	0	0	
Unit	**1 :** 3	**Alchl/Drgs:**	0	**Speed:** 50 MPH	**Dir:** E	**Veh Mnvr/Ped Actn:**				4			**Obj Strk:**			
Unit	**2 :** 4	**Alchl/Drgs:**	0	**Speed:** 0 MPH	**Dir:** E	**Veh Mnvr/Ped Actn:**				1			**Obj Strk:**			
1002	**105174995**	24.255	07/28/2017 17:12	REAR END, SLOW OR STOP	$ 3000	0	0	0	0	1	1	2	3	0	0	
Unit	**1 :** 5	**Alchl/Drgs:**	0	**Speed:** 30 MPH	**Dir:** E	**Veh Mnvr/Ped Actn:**				4			**Obj Strk:**			
Unit	**2 :** 1	**Alchl/Drgs:**	0	**Speed:** 30 MPH	**Dir:** E	**Veh Mnvr/Ped Actn:**				11			**Obj Strk:**			
1003	**105218216**	24.255	09/12/2017 12:30	FIXED OBJECT	$ 2000	0	0	0	0	2	1	2	3	0	0	
Unit	**1 :** 1	**Alchl/Drgs:**	0	**Speed:** 50 MPH	**Dir:** S	**Veh Mnvr/Ped Actn:**				4			**Obj Strk:**		44	
1004	**105243031**	24.255	09/30/2017 13:36	REAR END, SLOW OR STOP	$ 2300	0	0	0	0	1	1	1	1	0	0	
Unit	**1 :** 1	**Alchl/Drgs:**	0	**Speed:** 55 MPH	**Dir:** W	**Veh Mnvr/Ped Actn:**				4			**Obj Strk:**			
Unit	**2 :** 4	**Alchl/Drgs:**	0	**Speed:** 20 MPH	**Dir:** W	**Veh Mnvr/Ped Actn:**				11			**Obj Strk:**			
1005	**105286638**	24.255	11/12/2017 05:11	ANIMAL	$ 4900	0	0	0	0	1	5	1	1	0	0	
Unit	**1 :** 1	**Alchl/Drgs:**	0	**Speed:** 60 MPH	**Dir:** E	**Veh Mnvr/Ped Actn:**				4			**Obj Strk:**		17	
1006	**105351027**	24.255	01/12/2018 18:43	REAR END, SLOW OR STOP	$ 2000	0	0	0	0	2	5	2	1	0	0	
Unit	**1 :** 1	**Alchl/Drgs:**	0	**Speed:** 35 MPH	**Dir:** W	**Veh Mnvr/Ped Actn:**				4			**Obj Strk:**			
Unit	**2 :** 1	**Alchl/Drgs:**	0	**Speed:** 30 MPH	**Dir:** W	**Veh Mnvr/Ped Actn:**				4			**Obj Strk:**			

DocuSign Envelope ID: 5C03745C-4B01-4834-A65D-B77F558A4F46

North Carolina Department of Transportation
Traffic Engineering Accident Analysis System
Strip Analysis Report

Acc No	Crash ID	Milepost	Date	Accident Type	Total Damage	Injuries F	A	B	C	Condition R	L	W	Road Ch	Ci	Trfc Ctl Dv	Op
1007	**105535769**	24.255	07/09/2018 09:01	REAR END, SLOW OR STOP	$ 1700	0	0	0	0	1	1	1	1	0	0	
Unit	**1 :** 4	**Alchl/Drgs:**	0	**Speed:** 55 MPH	**Dir:** N	**Veh Mnvr/Ped Actn:**			4			**Obj Strk:**				
Unit	**2 :** 1	**Alchl/Drgs:**	0	**Speed:** 55 MPH	**Dir:** N	**Veh Mnvr/Ped Actn:**			1			**Obj Strk:**				
1008	**105538539**	24.255	07/12/2018 08:54	SIDESWIPE, SAME DIRECTION	$ 2200	0	0	0	0	1	1	1	3	0	0	
Unit	**1 :** 14	**Alchl/Drgs:**	0	**Speed:** 55 MPH	**Dir:** S	**Veh Mnvr/Ped Actn:**			5			**Obj Strk:**				
Unit	**2 :** 1	**Alchl/Drgs:**	0	**Speed:** 60 MPH	**Dir:** S	**Veh Mnvr/Ped Actn:**			4			**Obj Strk:**				
1009	**105559621**	24.255	07/29/2018 15:36	REAR END, SLOW OR STOP	$ 2000	0	0	0	0	1	1	1	3	0	0	
Unit	**1 :** 2	**Alchl/Drgs:**	0	**Speed:** 40 MPH	**Dir:** E	**Veh Mnvr/Ped Actn:**			4			**Obj Strk:**				
Unit	**2 :** 1	**Alchl/Drgs:**	0	**Speed:** 40 MPH	**Dir:** E	**Veh Mnvr/Ped Actn:**			11			**Obj Strk:**				
1010	**105652171**	24.255	10/26/2018 07:51	SIDESWIPE, SAME DIRECTION	$ 1150	0	0	0	0	2	1	3	3	0	0	
Unit	**1 :** 1	**Alchl/Drgs:**	0	**Speed:** 60 MPH	**Dir:** E	**Veh Mnvr/Ped Actn:**			5			**Obj Strk:**				
Unit	**2 :** 1	**Alchl/Drgs:**	0	**Speed:** 60 MPH	**Dir:** E	**Veh Mnvr/Ped Actn:**			4			**Obj Strk:**				
1011	**105699478**	24.255	12/04/2018 01:06	ANIMAL	$ 600	0	0	0	0	1	5	1	7	0	0	
Unit	**1 :** 1	**Alchl/Drgs:**	0	**Speed:** 60 MPH	**Dir:** W	**Veh Mnvr/Ped Actn:**			4			**Obj Strk:**			17	
1012	**105723126**	24.255	12/17/2018 16:41	REAR END, SLOW OR STOP	$ 16000	0	0	0	0	1	1	1	1	0	0	
Unit	**1 :** 1	**Alchl/Drgs:**	0	**Speed:** 45 MPH	**Dir:** W	**Veh Mnvr/Ped Actn:**			4			**Obj Strk:**				
Unit	**2 :** 4	**Alchl/Drgs:**	0	**Speed:** 45 MPH	**Dir:** W	**Veh Mnvr/Ped Actn:**			11			**Obj Strk:**				
1013	**105727577**	24.255	12/19/2018 19:13	REAR END, SLOW OR STOP	$ 1500	0	0	0	0	1	5	1	1	0	0	
Unit	**1 :** 1	**Alchl/Drgs:**	0	**Speed:** 30 MPH	**Dir:** E	**Veh Mnvr/Ped Actn:**			4			**Obj Strk:**				
Unit	**2 :** 1	**Alchl/Drgs:**	0	**Speed:** 20 MPH	**Dir:** E	**Veh Mnvr/Ped Actn:**			11			**Obj Strk:**				
1014	**104335103**	24.338	03/29/2015 13:42	REAR END, SLOW OR STOP	$ 12000	0	0	0	0	1	1	1	3	0	0	
Unit	**1 :** 4	**Alchl/Drgs:**	0	**Speed:** 50 MPH	**Dir:** W	**Veh Mnvr/Ped Actn:**			4			**Obj Strk:**				
Unit	**2 :** 4	**Alchl/Drgs:**	0	**Speed:** 55 MPH	**Dir:** W	**Veh Mnvr/Ped Actn:**			11			**Obj Strk:**				
1015	**104553327**	24.338	11/14/2015 15:50	SIDESWIPE, SAME DIRECTION	$ 1000	0	0	0	0	1	1	1	7	0	0	
Unit	**1 :** 1	**Alchl/Drgs:**	0	**Speed:** 60 MPH	**Dir:** N	**Veh Mnvr/Ped Actn:**			4			**Obj Strk:**				
Unit	**2 :** 4	**Alchl/Drgs:**	0	**Speed:** 60 MPH	**Dir:** N	**Veh Mnvr/Ped Actn:**			4			**Obj Strk:**				

DocuSign Envelope ID: 5C03745C-4B01-4834-A65D-B77F558A4F46

North Carolina Department of Transportation
Traffic Engineering Accident Analysis System
Strip Analysis Report

Acc No	Crash ID	Milepost	Date	Accident Type	Total Damage	Injuries F	A	B	C	Condition R	L	W	Road Ch	Ci	Trfc Ctl Dv	Op
1016	**104910221**	24.338	11/06/2016 10:30	REAR END, SLOW OR STOP	$ 8000	0	0	0	0	1	1	2	3	0	0	
Unit	**1 :** 1	**Alchl/Drgs:** 0	**Speed:** 50 MPH	**Dir:** E	**Veh Mnvr/Ped Actn:** 4	**Obj Strk:**										
Unit	**2 :** 2	**Alchl/Drgs:** 0	**Speed:** 50 MPH	**Dir:** E	**Veh Mnvr/Ped Actn:** 4	**Obj Strk:**										
Unit	**3 :** 2	**Alchl/Drgs:** 0	**Speed:** 40 MPH	**Dir:** E	**Veh Mnvr/Ped Actn:** 11	**Obj Strk:**										
1017	**105553962**	24.338	07/25/2018 07:59	REAR END, SLOW OR STOP	$ 800	0	0	0	2	1	1	2	3	0	0	
Unit	**1 :** 4	**Alchl/Drgs:** 0	**Speed:** 60 MPH	**Dir:** W	**Veh Mnvr/Ped Actn:** 11	**Obj Strk:**										
Unit	**2 :** 1	**Alchl/Drgs:** 0	**Speed:** 60 MPH	**Dir:** W	**Veh Mnvr/Ped Actn:** 11	**Obj Strk:**										
1018	**105600889**	24.338	09/11/2018 11:14	REAR END, SLOW OR STOP	$ 1200	0	0	0	0	1	1	2	3	0	0	
Unit	**1 :** 1	**Alchl/Drgs:** 0	**Speed:** 55 MPH	**Dir:** N	**Veh Mnvr/Ped Actn:** 4	**Obj Strk:**										
Unit	**2 :** 2	**Alchl/Drgs:** 0	**Speed:** 50 MPH	**Dir:** N	**Veh Mnvr/Ped Actn:** 11	**Obj Strk:**										
1019	**104227458**	24.344	11/29/2014 13:28	REAR END, SLOW OR STOP	$ 5000	0	0	0	1	1	1	1	3	0	0	
Unit	**1 :** 5	**Alchl/Drgs:** 0	**Speed:** 35 MPH	**Dir:** NW	**Veh Mnvr/Ped Actn:** 4	**Obj Strk:**										
Unit	**2 :** 1	**Alchl/Drgs:** 0	**Speed:** 5 MPH	**Dir:** NW	**Veh Mnvr/Ped Actn:** 11	**Obj Strk:**										
1020	**105492297**	24.344	05/26/2018 07:16	SIDESWIPE, SAME DIRECTION	$ 900	0	0	0	0	1	1	2	3	0	0	
Unit	**1 :** 1	**Alchl/Drgs:** 0	**Speed:** 60 MPH	**Dir:** S	**Veh Mnvr/Ped Actn:** 16	**Obj Strk:**										
Unit	**2 :** 1	**Alchl/Drgs:** 0	**Speed:** 60 MPH	**Dir:** S	**Veh Mnvr/Ped Actn:** 16	**Obj Strk:**										
1021	**104278666**	24.355	01/23/2015 13:25	FIXED OBJECT	$ 3700	0	0	0	0	2	1	3	3	0	0	
Unit	**1 :** 1	**Alchl/Drgs:** 0	**Speed:** 65 MPH	**Dir:** S	**Veh Mnvr/Ped Actn:** 4	**Obj Strk:** 44										
1022	**104566317**	24.355	11/20/2015 22:04	FIXED OBJECT	$ 7500	0	0	0	0	1	5	1	7	0	0	
Unit	**1 :** 4	**Alchl/Drgs:** 1	**Speed:** 60 MPH	**Dir:** W	**Veh Mnvr/Ped Actn:** 4	**Obj Strk:** 42										
1023	**104566205**	24.355	11/24/2015 05:23	ANIMAL	$ 3800	0	0	0	0	1	5	1	3	0	0	
Unit	**1 :** 1	**Alchl/Drgs:** 0	**Speed:** 60 MPH	**Dir:** N	**Veh Mnvr/Ped Actn:** 4	**Obj Strk:** 17										
1024	**104565869**	24.355	11/24/2015 16:53	SIDESWIPE, SAME DIRECTION	$ 2000	0	0	0	0	1	1	1	1	0	0	
Unit	**1 :** 1	**Alchl/Drgs:** 0	**Speed:** 60 MPH	**Dir:** W	**Veh Mnvr/Ped Actn:** 4	**Obj Strk:**										
Unit	**2 :** 4	**Alchl/Drgs:** 0	**Speed:** 60 MPH	**Dir:** W	**Veh Mnvr/Ped Actn:** 4	**Obj Strk:**										
1025	**104653801**	24.355	02/21/2016 19:43	REAR END, SLOW OR STOP	$ 13000	0	0	0	0	2	5	2	1	0	0	
Unit	**1 :** 1	**Alchl/Drgs:** 0	**Speed:** 60 MPH	**Dir:** W	**Veh Mnvr/Ped Actn:** 4	**Obj Strk:**										

DocuSign Envelope ID: 5C03745C-4B01-4834-A65D-B77F558A4F46

North Carolina Department of Transportation
Traffic Engineering Accident Analysis System
Strip Analysis Report

Acc No	Crash ID	Milepost	Date	Accident Type	Total Damage	Injuries F	A	B	C	Condition R	L	W	Road Ch	Ci	Trfc Ctl Dv	Op
Unit	**2 :** 4	**Alchl/Drgs:**	0	**Speed:** 60 MPH	**Dir:** W	**Veh Mnvr/Ped Actn:**				1			**Obj Strk:**			
Unit	**3 :** 4	**Alchl/Drgs:**	0	**Speed:** 60 MPH	**Dir:** W	**Veh Mnvr/Ped Actn:**				1			**Obj Strk:**			
1026	**104919860**	24.355	11/18/2016 13:42	REAR END, SLOW OR STOP	$ 5300	0	0	0	0	1	1	1	3	0	0	
Unit	**1 :** 4	**Alchl/Drgs:**	0	**Speed:** 60 MPH	**Dir:** W	**Veh Mnvr/Ped Actn:**				4			**Obj Strk:**			
Unit	**2 :** 2	**Alchl/Drgs:**	0	**Speed:** 60 MPH	**Dir:** W	**Veh Mnvr/Ped Actn:**				11			**Obj Strk:**			
1027	**105103453**	24.355	05/17/2017 16:28	REAR END, SLOW OR STOP	$ 1100	0	0	0	0	1	1	1	1	0	0	
Unit	**1 :** 4	**Alchl/Drgs:**	0	**Speed:** 45 MPH	**Dir:** W	**Veh Mnvr/Ped Actn:**				4			**Obj Strk:**			
Unit	**2 :** 1	**Alchl/Drgs:**	0	**Speed:** 45 MPH	**Dir:** W	**Veh Mnvr/Ped Actn:**				11			**Obj Strk:**			
1028	**105229570**	24.355	09/22/2017 13:00	FIXED OBJECT	$ 4000	0	0	0	0	1	1	1	1	0	0	
Unit	**1 :** 1	**Alchl/Drgs:**	0	**Speed:** 60 MPH	**Dir:** W	**Veh Mnvr/Ped Actn:**				4			**Obj Strk:**			42
1029	**105262930**	24.355	10/23/2017 07:55	REAR END, SLOW OR STOP	$ 1200	0	0	0	0	3	1	3	1	0	0	
Unit	**1 :** 1	**Alchl/Drgs:**	0	**Speed:** 50 MPH	**Dir:** W	**Veh Mnvr/Ped Actn:**				4			**Obj Strk:**			
Unit	**2 :** 1	**Alchl/Drgs:**	0	**Speed:** 40 MPH	**Dir:** W	**Veh Mnvr/Ped Actn:**				11			**Obj Strk:**			
1030	**105423117**	24.355	03/22/2018 14:14	FIXED OBJECT	$ 6000	0	0	0	0	1	1	1	7	0	0	
Unit	**1 :** 2	**Alchl/Drgs:**	0	**Speed:** 60 MPH	**Dir:** W	**Veh Mnvr/Ped Actn:**				4			**Obj Strk:**			48
1031	**104066179**	24.438	05/22/2014 07:58	REAR END, SLOW OR STOP	$ 2600	0	0	0	0	1	1	1	3	0	0	
Unit	**1 :** 2	**Alchl/Drgs:**	0	**Speed:** 60 MPH	**Dir:** W	**Veh Mnvr/Ped Actn:**				11			**Obj Strk:**			
Unit	**2 :** 4	**Alchl/Drgs:**	0	**Speed:** 60 MPH	**Dir:** W	**Veh Mnvr/Ped Actn:**				11			**Obj Strk:**			
1032	**105528456**	24.438	06/29/2018 16:12	REAR END, SLOW OR STOP	$ 2700	0	0	0	0	1	1	1	1	0	0	
Unit	**1 :** 4	**Alchl/Drgs:**	0	**Speed:** 55 MPH	**Dir:** E	**Veh Mnvr/Ped Actn:**				4			**Obj Strk:**			
Unit	**2 :** 4	**Alchl/Drgs:**	0	**Speed:** 55 MPH	**Dir:** E	**Veh Mnvr/Ped Actn:**				1			**Obj Strk:**			
Unit	**3 :** 1	**Alchl/Drgs:**	0	**Speed:** 55 MPH	**Dir:** E	**Veh Mnvr/Ped Actn:**				1			**Obj Strk:**			
1033	**105528455**	24.438	06/29/2018 16:13	REAR END, SLOW OR STOP	$ 3000	0	0	0	2	1	1	1	1	0	0	
Unit	**1 :** 4	**Alchl/Drgs:**	0	**Speed:** 55 MPH	**Dir:** E	**Veh Mnvr/Ped Actn:**				4			**Obj Strk:**			
Unit	**2 :** 2	**Alchl/Drgs:**	0	**Speed:** 55 MPH	**Dir:** E	**Veh Mnvr/Ped Actn:**				1			**Obj Strk:**			
Unit	**3 :** 4	**Alchl/Drgs:**	0	**Speed:** 55 MPH	**Dir:** E	**Veh Mnvr/Ped Actn:**				1			**Obj Strk:**			
1034	**105447982**	24.444	04/13/2018 05:05	FIXED OBJECT	$ 5000	0	0	0	0	1	5	1	3	0	0	
Unit	**1 :** 4	**Alchl/Drgs:**	0	**Speed:** 55 MPH	**Dir:** S	**Veh Mnvr/Ped Actn:**				5			**Obj Strk:**			44

All data presented in this report comes explicitly from the Traffic Engineering Accident Analysis System based upon va criteria provided by the report's creator. The onus is strictly upon the user of this report to exercise due diligence in in and further representing this data.

DocuSign Envelope ID: 5C03745C-4B01-4834-A65D-B77F558A4F46

North Carolina Department of Transportation
Traffic Engineering Accident Analysis System
Strip Analysis Report

Acc No	Crash ID	Milepost	Date	Accident Type	Total Damage	Injuries F	A	B	C	Condition R	L	W	Road Ch	Ci	Trfc Ctl Dv	Op
1035	**105447981**	24.444	04/13/2018 05:06	REAR END, SLOW OR STOP	$ 19200	0	0	3	0	1	5	1	3	0	0	
Unit	**1 :** 4	**Alchl/Drgs:** 7	**Speed:** 0 MPH	**Dir:** W	**Veh Mnvr/Ped Actn:** 16	**Obj Strk:** 20										
Unit	**2 :** 1	**Alchl/Drgs:** 7	**Speed:** 0 MPH	**Dir:** S	**Veh Mnvr/Ped Actn:** 3	**Obj Strk:** 20										
Unit	**3 :** 1	**Alchl/Drgs:** 0	**Speed:** 60 MPH	**Dir:** S	**Veh Mnvr/Ped Actn:** 4	**Obj Strk:**										
Unit	**4 :** 24	**Alchl/Drgs:** 0	**Speed:** 0 MPH	**Dir:**	**Veh Mnvr/Ped Actn:**	**Obj Strk:** 14										
1036	**104066156**	24.455	05/18/2014 13:38	SIDESWIPE, SAME DIRECTION	$ 6000	0	0	0	0	1	1	2	7	0	0	
Unit	**1 :** 5	**Alchl/Drgs:** 0	**Speed:** 60 MPH	**Dir:** E	**Veh Mnvr/Ped Actn:** 4	**Obj Strk:**										
Unit	**2 :** 4	**Alchl/Drgs:** 0	**Speed:** 60 MPH	**Dir:** E	**Veh Mnvr/Ped Actn:** 4	**Obj Strk:** 44										
1037	**104328051**	24.455	03/20/2015 16:28	MOVABLE OBJECT	$ 300	0	0	0	0	1	1	2	3	0	0	
Unit	**1 :** 4	**Alchl/Drgs:** 0	**Speed:** 60 MPH	**Dir:** E	**Veh Mnvr/Ped Actn:** 4	**Obj Strk:** 18										
1038	**104331947**	24.455	03/22/2015 04:26	REAR END, SLOW OR STOP	$ 16000	1	0	1	0	1	5	1	3	0	0	
Unit	**1 :** 14	**Alchl/Drgs:** 0	**Speed:** 45 MPH	**Dir:** N	**Veh Mnvr/Ped Actn:** 4	**Obj Strk:**										
Unit	**2 :** 4	**Alchl/Drgs:** 0	**Speed:** 66 MPH	**Dir:** N	**Veh Mnvr/Ped Actn:** 4	**Obj Strk:** 48										
1039	**104760512**	24.455	06/11/2016 13:32	REAR END, SLOW OR STOP	$ 3500	0	0	0	1	1	1	1	3	0	0	
Unit	**1 :** 1	**Alchl/Drgs:** 0	**Speed:** 40 MPH	**Dir:** E	**Veh Mnvr/Ped Actn:** 4	**Obj Strk:**										
Unit	**2 :** 4	**Alchl/Drgs:** 0	**Speed:** 40 MPH	**Dir:** E	**Veh Mnvr/Ped Actn:** 11	**Obj Strk:**										
1040	**104825111**	24.455	08/19/2016 17:00	REAR END, SLOW OR STOP	$ 6000	0	0	0	0	2	1	3	1	0	0	
Unit	**1 :** 1	**Alchl/Drgs:** 0	**Speed:** 30 MPH	**Dir:** E	**Veh Mnvr/Ped Actn:** 4	**Obj Strk:**										
Unit	**2 :** 1	**Alchl/Drgs:** 0	**Speed:** 30 MPH	**Dir:** E	**Veh Mnvr/Ped Actn:** 11	**Obj Strk:**										
1041	**105711436**	24.455	12/14/2018 17:28	REAR END, SLOW OR STOP	$ 14000	0	0	0	0	2	5	3	1	0	0	
Unit	**1 :** 4	**Alchl/Drgs:** 0	**Speed:** 35 MPH	**Dir:** W	**Veh Mnvr/Ped Actn:** 4	**Obj Strk:**										
Unit	**2 :** 4	**Alchl/Drgs:** 0	**Speed:** 30 MPH	**Dir:** W	**Veh Mnvr/Ped Actn:** 4	**Obj Strk:**										
Unit	**3 :** 4	**Alchl/Drgs:** 0	**Speed:** 0 MPH	**Dir:** W	**Veh Mnvr/Ped Actn:** 1	**Obj Strk:**										
1042	**104890421**	24.530	10/21/2016 11:27	REAR END, SLOW OR STOP	$ 10000	0	0	0	0	1	1	1	3	0	0	
Unit	**1 :** 2	**Alchl/Drgs:** 0	**Speed:** 60 MPH	**Dir:** E	**Veh Mnvr/Ped Actn:** 4	**Obj Strk:** 50										
Unit	**2 :** 1	**Alchl/Drgs:** 0	**Speed:** 60 MPH	**Dir:** E	**Veh Mnvr/Ped Actn:** 1	**Obj Strk:**										
1043	**105344393**	24.530	01/06/2018 00:02	RAN OFF ROAD - STRAIGHT	$ 10000	0	0	1	0	1	5	1	1	0	0	
Unit	**1 :** 4	**Alchl/Drgs:** 1	**Speed:** 50 MPH	**Dir:** W	**Veh Mnvr/Ped Actn:** 4	**Obj Strk:** 59										

DocuSign Envelope ID: 5C03745C-4B01-4834-A65D-B77F558A4F46

North Carolina Department of Transportation
Traffic Engineering Accident Analysis System
Strip Analysis Report

Acc No	Crash ID	Milepost	Date	Accident Type	Total Damage	Injuries F	A	B	C	Condition R	L	W	Road Ch	Ci	Trfc Ctl Dv	Op
1044	**104066225**	24.538	05/25/2014 09:46	OTHER COLLISION WITH VEHICLE	$ 1600	0	0	0	0	1	1	2	7	0	0	
Unit	**1 :** 4	**Alchl/Drgs:**	0	**Speed:**	65 MPH	**Dir:**	E	**Veh Mnvr/Ped Actn:**		5		**Obj Strk:**				
Unit	**2 :** 1	**Alchl/Drgs:**	0	**Speed:**	65 MPH	**Dir:**	E	**Veh Mnvr/Ped Actn:**		4		**Obj Strk:**				
Unit	**3 :** 2	**Alchl/Drgs:**	0	**Speed:**	65 MPH	**Dir:**	E	**Veh Mnvr/Ped Actn:**		4		**Obj Strk:**				
1045	**104070679**	24.538	06/01/2014 22:43	SIDESWIPE, SAME DIRECTION	$ 1010	0	0	0	0	1	5	1	3	0	0	
Unit	**1 :** 2	**Alchl/Drgs:**	0	**Speed:**	60 MPH	**Dir:**	W	**Veh Mnvr/Ped Actn:**		16		**Obj Strk:**				
Unit	**2 :** 1	**Alchl/Drgs:**	0	**Speed:**	60 MPH	**Dir:**	W	**Veh Mnvr/Ped Actn:**		16		**Obj Strk:**				
1046	**104515803**	24.538	10/10/2015 11:57	REAR END, SLOW OR STOP	$ 21000	0	0	0	0	2	1	3	5	0	0	
Unit	**1 :** 11	**Alchl/Drgs:**	0	**Speed:**	50 MPH	**Dir:**	W	**Veh Mnvr/Ped Actn:**		1		**Obj Strk:**				
Unit	**2 :** 4	**Alchl/Drgs:**	0	**Speed:**	50 MPH	**Dir:**	W	**Veh Mnvr/Ped Actn:**		4		**Obj Strk:**				
1047	**104575474**	24.544	12/04/2015 17:38	REAR END, SLOW OR STOP	$ 15500	0	0	0	3	1	5	1	1	0	0	
Unit	**1 :** 1	**Alchl/Drgs:**	0	**Speed:**	5 MPH	**Dir:**	SE	**Veh Mnvr/Ped Actn:**		1		**Obj Strk:**				
Unit	**2 :** 1	**Alchl/Drgs:**	0	**Speed:**	6 MPH	**Dir:**	SE	**Veh Mnvr/Ped Actn:**		1		**Obj Strk:**				
Unit	**3 :** 1	**Alchl/Drgs:**	0	**Speed:**	60 MPH	**Dir:**	SE	**Veh Mnvr/Ped Actn:**		4		**Obj Strk:**				
1048	**104184656**	24.555	10/16/2014 16:44	REAR END, SLOW OR STOP	$ 400	0	0	0	0	1	1	1	1	0	0	
Unit	**1 :** 4	**Alchl/Drgs:**	0	**Speed:**	15 MPH	**Dir:**	N	**Veh Mnvr/Ped Actn:**		4		**Obj Strk:**				
Unit	**2 :** 1	**Alchl/Drgs:**	0	**Speed:**	20 MPH	**Dir:**	N	**Veh Mnvr/Ped Actn:**		4		**Obj Strk:**				
1049	**104344163**	24.555	04/09/2015 07:20	SIDESWIPE, SAME DIRECTION	$ 2300	0	0	0	1	1	1	1	5	0	0	
Unit	**1 :** 1	**Alchl/Drgs:**	0	**Speed:**	70 MPH	**Dir:**	N	**Veh Mnvr/Ped Actn:**		5		**Obj Strk:**				
Unit	**2 :** 1	**Alchl/Drgs:**	0	**Speed:**	60 MPH	**Dir:**	N	**Veh Mnvr/Ped Actn:**		4		**Obj Strk:**			44	
1050	**104442591**	24.555	07/25/2015 14:40	SIDESWIPE, SAME DIRECTION	$ 2100	0	0	0	0	1	1	1	5	0	0	
Unit	**1 :** 12	**Alchl/Drgs:**	7	**Speed:**	60 MPH	**Dir:**	E	**Veh Mnvr/Ped Actn:**		5		**Obj Strk:**				
Unit	**2 :** 2	**Alchl/Drgs:**	0	**Speed:**	60 MPH	**Dir:**	E	**Veh Mnvr/Ped Actn:**		4		**Obj Strk:**			44	
1051	**104616412**	24.555	01/15/2016 15:28	FIXED OBJECT	$ 3200	0	0	0	0	2	1	3	1	0	0	
Unit	**1 :** 1	**Alchl/Drgs:**	0	**Speed:**	50 MPH	**Dir:**	S	**Veh Mnvr/Ped Actn:**		4		**Obj Strk:**			44	
1052	**104760333**	24.555	06/10/2016 12:46	OTHER COLLISION WITH VEHICLE	$ 2800	0	0	0	0	1	1	1	3	0	0	
Unit	**1 :** 20	**Alchl/Drgs:**	0	**Speed:**	60 MPH	**Dir:**	NW	**Veh Mnvr/Ped Actn:**		11		**Obj Strk:**				
Unit	**2 :** 1	**Alchl/Drgs:**	0	**Speed:**	60 MPH	**Dir:**	NW	**Veh Mnvr/Ped Actn:**		1		**Obj Strk:**				

All data presented in this report comes explicitly from the Traffic Engineering Accident Analysis System based upon va criteria provided by the report's creator. The onus is strictly upon the user of this report to exercise due diligence in in and further representing this data.

DocuSign Envelope ID: 5C03745C-4B01-4834-A65D-B77F558A4F46

North Carolina Department of Transportation
Traffic Engineering Accident Analysis System
Strip Analysis Report

Acc No	Crash ID	Milepost	Date	Accident Type	Total Damage	Injuries F	A	B	C	Condition R	L	W	Road Ch	Ci	Trfc Ctl Dv	Op
1053	**104877166**	24.555	10/07/2016 17:50	REAR END, SLOW OR STOP	$ 3500	0	0	0	1	2	1	3	1	0	0	
Unit	**1 :** 1	**Alchl/Drgs:** 0	**Speed:** 45 MPH	**Dir:** E	**Veh Mnvr/Ped Actn:** 4	**Obj Strk:**										
Unit	**2 :** 1	**Alchl/Drgs:** 0	**Speed:** 0 MPH	**Dir:** E	**Veh Mnvr/Ped Actn:** 1	**Obj Strk:**										
Unit	**3 :** 1	**Alchl/Drgs:** 0	**Speed:** 0 MPH	**Dir:** E	**Veh Mnvr/Ped Actn:** 1	**Obj Strk:**										
1054	**104910178**	24.555	11/11/2016 08:37	ANIMAL	$ 6000	0	0	0	0	1	1	1	3	0	0	
Unit	**1 :** 4	**Alchl/Drgs:** 0	**Speed:** 60 MPH	**Dir:** W	**Veh Mnvr/Ped Actn:** 4	**Obj Strk:** 17										
1055	**105110690**	24.555	05/24/2017 17:48	REAR END, SLOW OR STOP	$ 4500	0	0	0	0	2	1	3	1	0	0	
Unit	**1 :** 1	**Alchl/Drgs:** 0	**Speed:** 55 MPH	**Dir:** W	**Veh Mnvr/Ped Actn:** 4	**Obj Strk:**										
Unit	**2 :** 2	**Alchl/Drgs:** 0	**Speed:** 40 MPH	**Dir:** W	**Veh Mnvr/Ped Actn:** 11	**Obj Strk:**										
1056	**105322786**	24.555	12/13/2017 17:56	REAR END, SLOW OR STOP	$ 7000	0	0	0	0	1	2	1	1	0	0	
Unit	**1 :** 4	**Alchl/Drgs:** 0	**Speed:** 60 MPH	**Dir:** W	**Veh Mnvr/Ped Actn:** 4	**Obj Strk:**										
Unit	**2 :** 1	**Alchl/Drgs:** 0	**Speed:** 60 MPH	**Dir:** W	**Veh Mnvr/Ped Actn:** 11	**Obj Strk:**										
1057	**105322789**	24.555	12/13/2017 18:36	REAR END, SLOW OR STOP	$ 17500	0	0	0	1	1	2	1	1	0	0	
Unit	**1 :** 4	**Alchl/Drgs:** 0	**Speed:** 60 MPH	**Dir:** W	**Veh Mnvr/Ped Actn:** 4	**Obj Strk:**										
Unit	**2 :** 4	**Alchl/Drgs:** 0	**Speed:** 60 MPH	**Dir:** W	**Veh Mnvr/Ped Actn:** 4	**Obj Strk:**										
Unit	**3 :** 4	**Alchl/Drgs:** 0	**Speed:** 60 MPH	**Dir:** W	**Veh Mnvr/Ped Actn:** 1	**Obj Strk:**										
Unit	**4 :** 1	**Alchl/Drgs:** 0	**Speed:** 60 MPH	**Dir:** W	**Veh Mnvr/Ped Actn:** 1	**Obj Strk:**										
1058	**105329330**	24.555	12/20/2017 13:00	REAR END, SLOW OR STOP	$ 10500	0	0	0	0	2	1	2	1	0	0	
Unit	**1 :** 1	**Alchl/Drgs:** 0	**Speed:** 60 MPH	**Dir:** W	**Veh Mnvr/Ped Actn:** 4	**Obj Strk:**										
Unit	**2 :** 4	**Alchl/Drgs:** 0	**Speed:** 55 MPH	**Dir:** W	**Veh Mnvr/Ped Actn:** 11	**Obj Strk:**										
1059	**105412951**	24.555	03/15/2018 17:23	REAR END, SLOW OR STOP	$ 4000	0	0	0	0	1	1	1	1	0	0	
Unit	**1 :** 2	**Alchl/Drgs:** 0	**Speed:** 35 MPH	**Dir:** W	**Veh Mnvr/Ped Actn:** 4	**Obj Strk:**										
Unit	**2 :** 4	**Alchl/Drgs:** 0	**Speed:** 15 MPH	**Dir:** W	**Veh Mnvr/Ped Actn:** 11	**Obj Strk:**										
1060	**105602195**	24.555	09/13/2018 16:04	REAR END, SLOW OR STOP	$ 7500	0	0	0	0	2	1	3	1	0	0	
Unit	**1 :** 4	**Alchl/Drgs:** 0	**Speed:** 45 MPH	**Dir:** W	**Veh Mnvr/Ped Actn:** 4	**Obj Strk:**										
Unit	**2 :** 5	**Alchl/Drgs:** 0	**Speed:** 0 MPH	**Dir:** W	**Veh Mnvr/Ped Actn:** 1	**Obj Strk:**										
Unit	**3 :** 1	**Alchl/Drgs:** 0	**Speed:** 0 MPH	**Dir:** W	**Veh Mnvr/Ped Actn:** 1	**Obj Strk:**										
Unit	**4 :** 1	**Alchl/Drgs:** 0	**Speed:** 0 MPH	**Dir:** W	**Veh Mnvr/Ped Actn:** 1	**Obj Strk:**										

All data presented in this report comes explicitly from the Traffic Engineering Accident Analysis System based upon va criteria provided by the report's creator. The onus is strictly upon the user of this report to exercise due diligence in in and further representing this data.

DocuSign Envelope ID: 5C03745C-4B01-4834-A65D-B77F558A4F46

North Carolina Department of Transportation
Traffic Engineering Accident Analysis System
Strip Analysis Report

Acc No	Crash ID	Milepost	Date	Accident Type	Total Damage	Injuries F	A	B	C	Condition R	L	W	Road Ch	Ci	Trfc Ctl Dv	Op
1061	**105686910**	24.555	11/25/2018 03:16	ANIMAL	$ 3000	0	0	0	0	1	5	1	1	0	0	
Unit	**1 :** 1	**Alchl/Drgs:** 0	**Speed:** 60 MPH	**Dir:** E	**Veh Mnvr/Ped Actn:** 4	**Obj Strk:** 17										
1062	**104178491**	24.638	10/11/2014 13:23	REAR END, SLOW OR STOP	$ 6200	0	0	0	0	1	1	2	3	0	0	
Unit	**1 :** 4	**Alchl/Drgs:** 0	**Speed:** 50 MPH	**Dir:** W	**Veh Mnvr/Ped Actn:** 4	**Obj Strk:**										
Unit	**2 :** 4	**Alchl/Drgs:** 0	**Speed:** 40 MPH	**Dir:** W	**Veh Mnvr/Ped Actn:** 1	**Obj Strk:**										
1063	**104408068**	24.638	06/15/2015 16:51	REAR END, SLOW OR STOP	$ 2700	0	0	0	0	1	1	1	1	0	0	
Unit	**1 :** 1	**Alchl/Drgs:** 0	**Speed:** 10 MPH	**Dir:** E	**Veh Mnvr/Ped Actn:** 4	**Obj Strk:**										
Unit	**2 :** 1	**Alchl/Drgs:** 0	**Speed:** 10 MPH	**Dir:** E	**Veh Mnvr/Ped Actn:** 1	**Obj Strk:**										
Unit	**3 :** 1	**Alchl/Drgs:** 0	**Speed:** 10 MPH	**Dir:** E	**Veh Mnvr/Ped Actn:** 1	**Obj Strk:**										
1064	**104446028**	24.638	07/24/2015 15:49	REAR END, SLOW OR STOP	$ 20000	0	0	0	0	1	1	1	1	0	0	
Unit	**1 :** 4	**Alchl/Drgs:** 0	**Speed:** 55 MPH	**Dir:** E	**Veh Mnvr/Ped Actn:** 4	**Obj Strk:** 48										
Unit	**2 :** 4	**Alchl/Drgs:** 0	**Speed:** 45 MPH	**Dir:** E	**Veh Mnvr/Ped Actn:** 11	**Obj Strk:**										
Unit	**3 :** 2	**Alchl/Drgs:** 0	**Speed:** 45 MPH	**Dir:** E	**Veh Mnvr/Ped Actn:** 1	**Obj Strk:**										
1065	**104444337**	24.638	07/28/2015 07:38	REAR END, SLOW OR STOP	$ 6200	0	0	0	1	1	1	1	3	0	0	
Unit	**1 :** 1	**Alchl/Drgs:** 0	**Speed:** 50 MPH	**Dir:** S	**Veh Mnvr/Ped Actn:** 4	**Obj Strk:**										
Unit	**2 :** 4	**Alchl/Drgs:** 0	**Speed:** 55 MPH	**Dir:** S	**Veh Mnvr/Ped Actn:** 11	**Obj Strk:**										
1066	**104890601**	24.638	10/22/2016 11:43	REAR END, SLOW OR STOP	$ 650	0	0	0	0	1	1	1	3	0	0	
Unit	**1 :** 4	**Alchl/Drgs:** 0	**Speed:** 25 MPH	**Dir:** N	**Veh Mnvr/Ped Actn:** 4	**Obj Strk:**										
Unit	**2 :** 1	**Alchl/Drgs:** 0	**Speed:** 0 MPH	**Dir:** N	**Veh Mnvr/Ped Actn:** 1	**Obj Strk:**										
1067	**104910201**	24.638	11/11/2016 09:01	SIDESWIPE, SAME DIRECTION	$ 10400	0	0	0	0	1	1	1	3	0	0	
Unit	**1 :** 1	**Alchl/Drgs:** 0	**Speed:** 70 MPH	**Dir:** E	**Veh Mnvr/Ped Actn:** 5	**Obj Strk:**										
Unit	**2 :** 1	**Alchl/Drgs:** 0	**Speed:** 60 MPH	**Dir:** E	**Veh Mnvr/Ped Actn:** 4	**Obj Strk:**										
1068	**104925633**	24.638	11/23/2016 19:06	REAR END, SLOW OR STOP	$ 2400	0	0	0	0	1	5	1	3	0	0	
Unit	**1 :** 4	**Alchl/Drgs:** 0	**Speed:** 30 MPH	**Dir:** E	**Veh Mnvr/Ped Actn:** 4	**Obj Strk:**										
Unit	**2 :** 1	**Alchl/Drgs:** 0	**Speed:** 25 MPH	**Dir:** E	**Veh Mnvr/Ped Actn:** 4	**Obj Strk:**										
1069	**105114557**	24.638	05/23/2017 17:28	REAR END, SLOW OR STOP	$ 2000	0	0	0	0	2	1	3	3	0	0	
Unit	**1 :** 1	**Alchl/Drgs:** 0	**Speed:** 55 MPH	**Dir:** W	**Veh Mnvr/Ped Actn:** 4	**Obj Strk:**										
Unit	**2 :** 1	**Alchl/Drgs:** 0	**Speed:** 5 MPH	**Dir:** W	**Veh Mnvr/Ped Actn:** 11	**Obj Strk:**										

DocuSign Envelope ID: 5C03745C-4B01-4834-A65D-B77F558A4F46

North Carolina Department of Transportation
Traffic Engineering Accident Analysis System
Strip Analysis Report

Acc No	Crash ID	Milepost	Date	Accident Type	Total Damage	Injuries F	A	B	C	Condition R	L	W	Road Ch	Ci	Trfc Ctl Dv	Op
1070	**105243075**	24.638	10/01/2017 22:02	REAR END, SLOW OR STOP	$ 1800	0	0	0	0	1	5	1	3	0	0	
Unit	**1 :** 1	**Alchl/Drgs:** 0	**Speed:** 15 MPH	**Dir:** W	**Veh Mnvr/Ped Actn:** 4	**Obj Strk:**										
Unit	**2 :** 1	**Alchl/Drgs:** 0	**Speed:** 15 MPH	**Dir:** W	**Veh Mnvr/Ped Actn:** 1	**Obj Strk:**										
1071	**105389802**	24.638	02/22/2018 07:01	MOVABLE OBJECT	$ 1500	0	0	0	0	1	3	1	3	0	0	
Unit	**1 :** 1	**Alchl/Drgs:** 0	**Speed:** 60 MPH	**Dir:** S	**Veh Mnvr/Ped Actn:** 4	**Obj Strk:** 18										
1072	**105520658**	24.638	06/23/2018 12:28	REAR END, SLOW OR STOP	$ 2400	0	0	0	0	1	1	1	3	0	0	
Unit	**1 :** 1	**Alchl/Drgs:** 0	**Speed:** 40 MPH	**Dir:** S	**Veh Mnvr/Ped Actn:** 4	**Obj Strk:**										
Unit	**2 :** 1	**Alchl/Drgs:** 0	**Speed:** 0 MPH	**Dir:** S	**Veh Mnvr/Ped Actn:** 1	**Obj Strk:**										
1073	**105541329**	24.638	07/13/2018 16:32	REAR END, SLOW OR STOP	$ 1700	0	0	0	1	1	1	1	3	0	0	
Unit	**1 :** 2	**Alchl/Drgs:** 0	**Speed:** 35 MPH	**Dir:** E	**Veh Mnvr/Ped Actn:** 4	**Obj Strk:**										
Unit	**2 :** 4	**Alchl/Drgs:** 0	**Speed:** 35 MPH	**Dir:** E	**Veh Mnvr/Ped Actn:** 1	**Obj Strk:**										
1074	**105541701**	24.638	07/15/2018 13:48	REAR END, SLOW OR STOP	$ 6000	0	0	0	1	1	1	1	3	0	0	
Unit	**1 :** 1	**Alchl/Drgs:** 0	**Speed:** 30 MPH	**Dir:** W	**Veh Mnvr/Ped Actn:** 1	**Obj Strk:**										
Unit	**2 :** 20	**Alchl/Drgs:** 0	**Speed:** 30 MPH	**Dir:** W	**Veh Mnvr/Ped Actn:** 4	**Obj Strk:**										
1075	**105602226**	24.638	09/13/2018 16:22	REAR END, SLOW OR STOP	$ 800	0	0	0	0	1	1	2	7	0	0	
Unit	**1 :** 1	**Alchl/Drgs:** 0	**Speed:** 0 MPH	**Dir:** E	**Veh Mnvr/Ped Actn:** 12	**Obj Strk:**										
Unit	**2 :** 4	**Alchl/Drgs:** 0	**Speed:** 0 MPH	**Dir:** E	**Veh Mnvr/Ped Actn:** 1	**Obj Strk:**										
1076	**105624233**	24.638	09/30/2018 14:19	REAR END, SLOW OR STOP	$ 4000	0	0	0	0	2	1	3	3	0	0	
Unit	**1 :** 1	**Alchl/Drgs:** 0	**Speed:** 60 MPH	**Dir:** E	**Veh Mnvr/Ped Actn:** 4	**Obj Strk:**										
Unit	**2 :** 4	**Alchl/Drgs:** 0	**Speed:** 60 MPH	**Dir:** E	**Veh Mnvr/Ped Actn:** 1	**Obj Strk:**										
1077	**105661099**	24.638	11/02/2018 20:48	SIDESWIPE, SAME DIRECTION	$ 1300	0	0	0	0	1	5	1	1	0	0	
Unit	**1 :** 12	**Alchl/Drgs:** 0	**Speed:** 60 MPH	**Dir:** S	**Veh Mnvr/Ped Actn:** 4	**Obj Strk:**										
Unit	**2 :** 1	**Alchl/Drgs:** 7	**Speed:** 60 MPH	**Dir:** S	**Veh Mnvr/Ped Actn:** 4	**Obj Strk:**										
1078	**104000708**	24.655	03/11/2014 15:08	MOVABLE OBJECT	$ 1000	0	0	0	0	1	1	1	1	0	0	
Unit	**1 :** 2	**Alchl/Drgs:** 0	**Speed:** 60 MPH	**Dir:** S	**Veh Mnvr/Ped Actn:** 4	**Obj Strk:** 18										
Unit	**2 :** 1	**Alchl/Drgs:** 0	**Speed:** 60 MPH	**Dir:** S	**Veh Mnvr/Ped Actn:** 4	**Obj Strk:** 18										

DocuSign Envelope ID: 5C03745C-4B01-4834-A65D-B77F558A4F46

North Carolina Department of Transportation
Traffic Engineering Accident Analysis System
Strip Analysis Report

Acc No	Crash ID	Milepost	Date	Accident Type	Total Damage	Injuries F	A	B	C	Condition R	L	W	Road Ch	Ci	Trfc Ctl Dv	Op
1079	**104099057**	24.655	07/03/2014 18:20	REAR END, SLOW OR STOP	$ 2200	0	0	0	0	1	1	1	1	0	0	
Unit	**1 :** 4	**Alchl/Drgs:** 0	**Speed:** 50 MPH	**Dir:** S	**Veh Mnvr/Ped Actn:** 4	**Obj Strk:**										
Unit	**2 :** 1	**Alchl/Drgs:** 0	**Speed:** 50 MPH	**Dir:** S	**Veh Mnvr/Ped Actn:** 11	**Obj Strk:**										
Unit	**3 :** 1	**Alchl/Drgs:** 0	**Speed:** 50 MPH	**Dir:** S	**Veh Mnvr/Ped Actn:** 1	**Obj Strk:**										
1080	**104099058**	24.655	07/03/2014 18:23	REAR END, SLOW OR STOP	$ 4000	0	0	0	0	1	1	1	1	0	0	
Unit	**1 :** 1	**Alchl/Drgs:** 0	**Speed:** 50 MPH	**Dir:** S	**Veh Mnvr/Ped Actn:** 4	**Obj Strk:**										
Unit	**2 :** 3	**Alchl/Drgs:** 0	**Speed:** 50 MPH	**Dir:** S	**Veh Mnvr/Ped Actn:** 11	**Obj Strk:**										
1081	**104112205**	24.655	07/26/2014 12:18	REAR END, SLOW OR STOP	$ 4000	0	0	0	0	1	1	1	3	0	0	
Unit	**1 :** 4	**Alchl/Drgs:** 0	**Speed:** 50 MPH	**Dir:** E	**Veh Mnvr/Ped Actn:** 4	**Obj Strk:**										
Unit	**2 :** 1	**Alchl/Drgs:** 0	**Speed:** 50 MPH	**Dir:** E	**Veh Mnvr/Ped Actn:** 1	**Obj Strk:**										
1082	**104142604**	24.655	09/02/2014 18:21	SIDESWIPE, SAME DIRECTION	$ 2000	0	0	0	0	1	1	1	3	0	0	
Unit	**1 :** 1	**Alchl/Drgs:** 0	**Speed:** 55 MPH	**Dir:** S	**Veh Mnvr/Ped Actn:** 5	**Obj Strk:**										
Unit	**2 :** 1	**Alchl/Drgs:** 0	**Speed:** 60 MPH	**Dir:** S	**Veh Mnvr/Ped Actn:** 4	**Obj Strk:**										
1083	**104214177**	24.655	11/14/2014 16:32	REAR END, SLOW OR STOP	$ 6000	0	0	0	1	1	1	1	2	0	0	
Unit	**1 :** 1	**Alchl/Drgs:** 0	**Speed:** 45 MPH	**Dir:** N	**Veh Mnvr/Ped Actn:** 4	**Obj Strk:**										
Unit	**2 :** 2	**Alchl/Drgs:** 0	**Speed:** 45 MPH	**Dir:** N	**Veh Mnvr/Ped Actn:** 11	**Obj Strk:**										
1084	**104421684**	24.655	06/26/2015 22:54	FIXED OBJECT	$ 3500	0	0	0	0	2	5	3	1	0	0	
Unit	**1 :** 24	**Alchl/Drgs:** 0	**Speed:** 0 MPH	**Dir:**	**Veh Mnvr/Ped Actn:**	**Obj Strk:**										
Unit	**2 :** 1	**Alchl/Drgs:** 0	**Speed:** 55 MPH	**Dir:** N	**Veh Mnvr/Ped Actn:** 4	**Obj Strk:** 44										
1085	**104538591**	24.655	10/30/2015 14:50	REAR END, SLOW OR STOP	$ 7500	0	0	0	0	1	1	1	1	0	0	
Unit	**1 :** 2	**Alchl/Drgs:** 0	**Speed:** 50 MPH	**Dir:** W	**Veh Mnvr/Ped Actn:** 4	**Obj Strk:**										
Unit	**2 :** 4	**Alchl/Drgs:** 0	**Speed:** 50 MPH	**Dir:** W	**Veh Mnvr/Ped Actn:** 1	**Obj Strk:**										
1086	**104538602**	24.655	10/30/2015 15:20	REAR END, SLOW OR STOP	$ 7000	0	0	0	0	1	1	1	1	0	0	
Unit	**1 :** 4	**Alchl/Drgs:** 0	**Speed:** 50 MPH	**Dir:** W	**Veh Mnvr/Ped Actn:** 4	**Obj Strk:**										
Unit	**2 :** 1	**Alchl/Drgs:** 0	**Speed:** 50 MPH	**Dir:** W	**Veh Mnvr/Ped Actn:** 11	**Obj Strk:**										
1087	**104553127**	24.655	11/13/2015 17:42	REAR END, SLOW OR STOP	$ 3300	0	0	0	0	1	5	1	3	0	0	
Unit	**1 :** 4	**Alchl/Drgs:** 0	**Speed:** 0 MPH	**Dir:** W	**Veh Mnvr/Ped Actn:** 4	**Obj Strk:**										
Unit	**2 :** 1	**Alchl/Drgs:** 0	**Speed:** 0 MPH	**Dir:** W	**Veh Mnvr/Ped Actn:** 1	**Obj Strk:**										

All data presented in this report comes explicitly from the Traffic Engineering Accident Analysis System based upon va criteria provided by the report's creator. The onus is strictly upon the user of this report to exercise due diligence in in and further representing this data.

DocuSign Envelope ID: 5C03745C-4B01-4834-A65D-B77F558A4F46

North Carolina Department of Transportation
Traffic Engineering Accident Analysis System
Strip Analysis Report

Acc No	Crash ID	Milepost	Date	Accident Type	Total Damage	Injuries F	A	B	C	Condition R	L	W	Road Ch	Ci	Trfc Ctl Dv	Op
1088	**104808759**	24.655	08/01/2016 23:52	FIXED OBJECT	$ 3500	0	0	0	0	1	5	1	1	0	0	
Unit	**1 :** 1	**Alchl/Drgs:** 0	**Speed:** 45 MPH	**Dir:** W	**Veh Mnvr/Ped Actn:** 4	**Obj Strk:** 59										
1089	**104880906**	24.655	10/14/2016 08:58	REAR END, SLOW OR STOP	$ 7500	0	0	0	0	1	1	1	5	0	0	
Unit	**1 :** 2	**Alchl/Drgs:** 0	**Speed:** 50 MPH	**Dir:** W	**Veh Mnvr/Ped Actn:** 4	**Obj Strk:**										
Unit	**2 :** 4	**Alchl/Drgs:** 0	**Speed:** 50 MPH	**Dir:** W	**Veh Mnvr/Ped Actn:** 11	**Obj Strk:**										
1090	**104935301**	24.655	12/02/2016 18:10	REAR END, SLOW OR STOP	$ 12200	0	0	0	0	1	5	1	1	0	0	
Unit	**1 :** 1	**Alchl/Drgs:** 0	**Speed:** 45 MPH	**Dir:** W	**Veh Mnvr/Ped Actn:** 4	**Obj Strk:**										
Unit	**2 :** 2	**Alchl/Drgs:** 0	**Speed:** 0 MPH	**Dir:** W	**Veh Mnvr/Ped Actn:** 1	**Obj Strk:**										
Unit	**3 :** 4	**Alchl/Drgs:** 0	**Speed:** 0 MPH	**Dir:** W	**Veh Mnvr/Ped Actn:** 1	**Obj Strk:** 20										
Unit	**4 :** 1	**Alchl/Drgs:** 0	**Speed:** 0 MPH	**Dir:** W	**Veh Mnvr/Ped Actn:** 1	**Obj Strk:**										
1091	**105037763**	24.655	03/10/2017 15:32	SIDESWIPE, SAME DIRECTION	$ 4000	0	0	0	0	1	1	1	1	0	0	
Unit	**1 :** 14	**Alchl/Drgs:** 0	**Speed:** 63 MPH	**Dir:** E	**Veh Mnvr/Ped Actn:** 5	**Obj Strk:**										
Unit	**2 :** 1	**Alchl/Drgs:** 0	**Speed:** 60 MPH	**Dir:** E	**Veh Mnvr/Ped Actn:** 4	**Obj Strk:** 43										
1092	**105066276**	24.655	04/07/2017 17:52	REAR END, SLOW OR STOP	$ 7000	0	0	0	4	1	1	1	1	0	0	
Unit	**1 :** 1	**Alchl/Drgs:** 0	**Speed:** 60 MPH	**Dir:** W	**Veh Mnvr/Ped Actn:** 11	**Obj Strk:**										
Unit	**2 :** 2	**Alchl/Drgs:** 0	**Speed:** 0 MPH	**Dir:** W	**Veh Mnvr/Ped Actn:** 1	**Obj Strk:** 45										
Unit	**3 :** 4	**Alchl/Drgs:** 0	**Speed:** 0 MPH	**Dir:** W	**Veh Mnvr/Ped Actn:** 1	**Obj Strk:**										
1093	**105213387**	24.655	09/07/2017 14:25	REAR END, SLOW OR STOP	$ 6000	0	0	0	0	1	1	1	1	0	0	
Unit	**1 :** 1	**Alchl/Drgs:** 0	**Speed:** 55 MPH	**Dir:** W	**Veh Mnvr/Ped Actn:** 4	**Obj Strk:**										
Unit	**2 :** 2	**Alchl/Drgs:** 0	**Speed:** 10 MPH	**Dir:** W	**Veh Mnvr/Ped Actn:** 11	**Obj Strk:**										
1094	**105286640**	24.655	11/10/2017 12:34	REAR END, SLOW OR STOP	$ 6000	0	0	0	0	1	1	1	1	0	0	
Unit	**1 :** 1	**Alchl/Drgs:** 0	**Speed:** 55 MPH	**Dir:** W	**Veh Mnvr/Ped Actn:** 4	**Obj Strk:**										
Unit	**2 :** 1	**Alchl/Drgs:** 0	**Speed:** 20 MPH	**Dir:** W	**Veh Mnvr/Ped Actn:** 11	**Obj Strk:**										
1095	**105386178**	24.655	02/16/2018 19:47	REAR END, SLOW OR STOP	$ 10000	0	0	0	0	1	2	1	1	0	0	
Unit	**1 :** 1	**Alchl/Drgs:** 0	**Speed:** 60 MPH	**Dir:** E	**Veh Mnvr/Ped Actn:** 4	**Obj Strk:**										
Unit	**2 :** 2	**Alchl/Drgs:** 0	**Speed:** 60 MPH	**Dir:** E	**Veh Mnvr/Ped Actn:** 1	**Obj Strk:**										
1096	**105512473**	24.655	06/14/2018 14:42	SIDESWIPE, SAME DIRECTION	$ 6500	0	0	0	0	1	1	1	1	0	0	
Unit	**1 :** 4	**Alchl/Drgs:** 0	**Speed:** 50 MPH	**Dir:** W	**Veh Mnvr/Ped Actn:** 5	**Obj Strk:**										
Unit	**2 :** 2	**Alchl/Drgs:** 0	**Speed:** 35 MPH	**Dir:** W	**Veh Mnvr/Ped Actn:** 4	**Obj Strk:**										

DocuSign Envelope ID: 5C03745C-4B01-4834-A65D-B77F558A4F46

North Carolina Department of Transportation
Traffic Engineering Accident Analysis System
Strip Analysis Report

Acc No	Crash ID	Milepost	Date	Accident Type	Total Damage	Injuries F	A	B	C	Condition R	L	W	Road Ch	Ci	Trfc Ctl Dv	Op
Unit	**3 :** 1	**Alchl/Drgs:**	0	**Speed:** 25 MPH	**Dir:** W	**Veh Mnvr/Ped Actn:**				4			**Obj Strk:**			
1097	**105528215**	24.655	06/27/2018 17:04	REAR END, SLOW OR STOP	$ 5000	0	0	0	0	1	1	2	1	0	0	
Unit	**1 :** 5	**Alchl/Drgs:**	0	**Speed:** 30 MPH	**Dir:** E	**Veh Mnvr/Ped Actn:**				4			**Obj Strk:**			
Unit	**2 :** 1	**Alchl/Drgs:**	0	**Speed:** 0 MPH	**Dir:** E	**Veh Mnvr/Ped Actn:**				1			**Obj Strk:**			
Unit	**3 :** 1	**Alchl/Drgs:**	0	**Speed:** 0 MPH	**Dir:** E	**Veh Mnvr/Ped Actn:**				1			**Obj Strk:**			
Unit	**4 :** 4	**Alchl/Drgs:**	0	**Speed:** 0 MPH	**Dir:** E	**Veh Mnvr/Ped Actn:**				1			**Obj Strk:**			
1098	**105549200**	24.655	07/22/2018 16:03	REAR END, SLOW OR STOP	$ 3200	0	0	0	0	2	1	3	3	0	0	
Unit	**1 :** 4	**Alchl/Drgs:**	0	**Speed:** 40 MPH	**Dir:** E	**Veh Mnvr/Ped Actn:**				4			**Obj Strk:**			
Unit	**2 :** 2	**Alchl/Drgs:**	1	**Speed:** 35 MPH	**Dir:** E	**Veh Mnvr/Ped Actn:**				4			**Obj Strk:**			
Unit	**3 :** 1	**Alchl/Drgs:**	0	**Speed:** 35 MPH	**Dir:** E	**Veh Mnvr/Ped Actn:**				11			**Obj Strk:**			
1099	**105561022**	24.655	08/02/2018 17:12	REAR END, SLOW OR STOP	$ 4000	0	0	0	0	2	1	3	1	0	0	
Unit	**1 :** 1	**Alchl/Drgs:**	0	**Speed:** 35 MPH	**Dir:** E	**Veh Mnvr/Ped Actn:**				4			**Obj Strk:**			
Unit	**2 :** 1	**Alchl/Drgs:**	0	**Speed:** 5 MPH	**Dir:** E	**Veh Mnvr/Ped Actn:**				11			**Obj Strk:**			
1100	**105720868**	24.655	12/17/2018 12:03	MOVABLE OBJECT	$ 500	0	0	0	0	1	1	1	1	0	0	
Unit	**1 :** 5	**Alchl/Drgs:**	0	**Speed:** 60 MPH	**Dir:** W	**Veh Mnvr/Ped Actn:**				4			**Obj Strk:**			
Unit	**2 :** 5	**Alchl/Drgs:**	0	**Speed:** 60 MPH	**Dir:** W	**Veh Mnvr/Ped Actn:**				4			**Obj Strk:**		18	
1101	**104078919**	24.678	06/10/2014 21:03	FIXED OBJECT	$ 5000	0	0	0	1	2	5	3	3	0	0	
Unit	**1 :** 1	**Alchl/Drgs:**	0	**Speed:** 55 MPH	**Dir:** E	**Veh Mnvr/Ped Actn:**				4			**Obj Strk:**		44	
1102	**104006853**	24.712	03/18/2014 14:46	FIXED OBJECT	$ 2700	0	0	0	0	1	1	2	5	0	0	
Unit	**1 :** 2	**Alchl/Drgs:**	0	**Speed:** 60 MPH	**Dir:** N	**Veh Mnvr/Ped Actn:**				4			**Obj Strk:**		44	
1103	**104898017**	24.736	10/24/2016 08:35	REAR END, SLOW OR STOP	$ 6000	0	0	1	0	1	1	1	1	0	0	
Unit	**1 :** 1	**Alchl/Drgs:**	7	**Speed:** 45 MPH	**Dir:** W	**Veh Mnvr/Ped Actn:**				4			**Obj Strk:**			
Unit	**2 :** 1	**Alchl/Drgs:**	0	**Speed:** 20 MPH	**Dir:** W	**Veh Mnvr/Ped Actn:**				11			**Obj Strk:**			
Unit	**3 :** 1	**Alchl/Drgs:**	0	**Speed:** 10 MPH	**Dir:** W	**Veh Mnvr/Ped Actn:**				11			**Obj Strk:**			
1104	**105624677**	24.736	09/29/2018 18:52	FIXED OBJECT	$ 5000	0	0	0	0	3	5	3	1	0	0	
Unit	**1 :** 1	**Alchl/Drgs:**	0	**Speed:** 40 MPH	**Dir:** E	**Veh Mnvr/Ped Actn:**				4			**Obj Strk:**		44	
1105	**104208606**	24.738	11/10/2014 08:22	SIDESWIPE, SAME DIRECTION	$ 7000	0	0	1	1	1	1	1	3	0	0	
Unit	**1 :** 1	**Alchl/Drgs:**	0	**Speed:** 65 MPH	**Dir:** E	**Veh Mnvr/Ped Actn:**				6			**Obj Strk:**			

DocuSign Envelope ID: 5C03745C-4B01-4834-A65D-B77F558A4F46

North Carolina Department of Transportation
Traffic Engineering Accident Analysis System
Strip Analysis Report

Acc No	Crash ID	Milepost	Date	Accident Type	Total Damage	Injuries F	A	B	C	Condition R	L	W	Road Ch	Ci	Trfc Ctl Dv	Op
Unit	**2 :** 4	**Alchl/Drgs:**	0	**Speed:** 60 MPH	**Dir:** E	**Veh Mnvr/Ped Actn:**				4			**Obj Strk:**		46	
1106	**104231979**	24.738	11/30/2014 01:59	ANIMAL	$ 2500	0	0	0	0	1	5	1	3	0	0	
Unit	**1 :** 1	**Alchl/Drgs:**	0	**Speed:** 60 MPH	**Dir:** E	**Veh Mnvr/Ped Actn:**				4			**Obj Strk:**		17	
1107	**104411865**	24.738	06/16/2015 16:27	SIDESWIPE, SAME DIRECTION	$ 1500	0	0	0	1	1	1	1	1	0	0	
Unit	**1 :** 11	**Alchl/Drgs:**	0	**Speed:** 50 MPH	**Dir:** NW	**Veh Mnvr/Ped Actn:**				4			**Obj Strk:**			
Unit	**2 :** 6	**Alchl/Drgs:**	0	**Speed:** 50 MPH	**Dir:** NW	**Veh Mnvr/Ped Actn:**				4			**Obj Strk:**			
1108	**104428905**	24.738	07/09/2015 17:49	REAR END, SLOW OR STOP	$ 4000	0	0	0	0	1	1	1	1	0	0	
Unit	**1 :** 1	**Alchl/Drgs:**	0	**Speed:** 15 MPH	**Dir:** E	**Veh Mnvr/Ped Actn:**				4			**Obj Strk:**			
Unit	**2 :** 1	**Alchl/Drgs:**	0	**Speed:** 15 MPH	**Dir:** E	**Veh Mnvr/Ped Actn:**				11			**Obj Strk:**			
1109	**105174511**	24.738	07/15/2017 16:20	REAR END, SLOW OR STOP	$ 8000	0	0	0	0	2	1	3	3	0	0	
Unit	**1 :** 4	**Alchl/Drgs:**	0	**Speed:** 55 MPH	**Dir:** E	**Veh Mnvr/Ped Actn:**				4			**Obj Strk:**			
Unit	**2 :** 5	**Alchl/Drgs:**	0	**Speed:** 55 MPH	**Dir:** E	**Veh Mnvr/Ped Actn:**				1			**Obj Strk:**			
1110	**105602231**	24.738	09/13/2018 16:54	REAR END, SLOW OR STOP	$ 1000	0	0	0	0	2	1	3	3	0	0	
Unit	**1 :** 1	**Alchl/Drgs:**	0	**Speed:** 30 MPH	**Dir:** E	**Veh Mnvr/Ped Actn:**				11			**Obj Strk:**			
Unit	**2 :** 4	**Alchl/Drgs:**	0	**Speed:** 30 MPH	**Dir:** E	**Veh Mnvr/Ped Actn:**				1			**Obj Strk:**			
1111	**105086815**	24.744	04/22/2017 00:46	SIDESWIPE, SAME DIRECTION	$ 5000	0	0	0	0	2	5	2	1	0	0	
Unit	**1 :** 14	**Alchl/Drgs:**	0	**Speed:** 60 MPH	**Dir:** E	**Veh Mnvr/Ped Actn:**				4			**Obj Strk:**			
Unit	**2 :** 32	**Alchl/Drgs:**	7	**Speed:** 60 MPH	**Dir:** E	**Veh Mnvr/Ped Actn:**				4			**Obj Strk:**			
1112	**105101344**	24.744	05/08/2017 22:41	FIXED OBJECT	$ 15000	0	0	0	0	1	1	1	1	0	0	
Unit	**1 :** 1	**Alchl/Drgs:**	0	**Speed:** 60 MPH	**Dir:** E	**Veh Mnvr/Ped Actn:**				4			**Obj Strk:**		42	
1113	**105498142**	24.744	06/01/2018 15:57	REAR END, SLOW OR STOP	$ 17000	0	0	0	1	1	1	1	1	0	0	
Unit	**1 :** 4	**Alchl/Drgs:**	0	**Speed:** 50 MPH	**Dir:** E	**Veh Mnvr/Ped Actn:**				4			**Obj Strk:**			
Unit	**2 :** 4	**Alchl/Drgs:**	0	**Speed:** 0 MPH	**Dir:** E	**Veh Mnvr/Ped Actn:**				1			**Obj Strk:**			
1114	**105711207**	24.744	12/11/2018 02:35	FIXED OBJECT	$ 10700	0	0	0	0	2	4	2	5	0	0	
Unit	**1 :** 1	**Alchl/Drgs:**	0	**Speed:** 60 MPH	**Dir:** E	**Veh Mnvr/Ped Actn:**				4			**Obj Strk:**		44	

DocuSign Envelope ID: 5C03745C-4B01-4834-A65D-B77F558A4F46

North Carolina Department of Transportation
Traffic Engineering Accident Analysis System
Strip Analysis Report

Acc No	Crash ID	Milepost	Date	Accident Type	Total Damage	Injuries F	A	B	C	Condition R	L	W	Road Ch	Ci	Trfc Ctl Dv	Op
1115	**105220469**	24.745	09/13/2017 16:41	REAR END, SLOW OR STOP	$ 1200	0	0	0	0	1	1	2	3	0	0	
Unit	**1 :** 1	**Alchl/Drgs:** 0	**Speed:** 60 MPH	**Dir:** W	**Veh Mnvr/Ped Actn:** 4	**Obj Strk:**										
Unit	**2 :** 2	**Alchl/Drgs:** 0	**Speed:** 60 MPH	**Dir:** W	**Veh Mnvr/Ped Actn:** 4	**Obj Strk:**										
1116	**105466523**	24.745	04/30/2018 21:30	REAR END, SLOW OR STOP	$ 8000	0	0	1	1	1	5	1	3	0	0	
Unit	**1 :** 1	**Alchl/Drgs:** 0	**Speed:** 55 MPH	**Dir:** W	**Veh Mnvr/Ped Actn:** 5	**Obj Strk:** 44										
Unit	**2 :** 4	**Alchl/Drgs:** 0	**Speed:** 20 MPH	**Dir:** W	**Veh Mnvr/Ped Actn:** 4	**Obj Strk:**										
Unit	**3 :** 2	**Alchl/Drgs:** 0	**Speed:** 15 MPH	**Dir:** W	**Veh Mnvr/Ped Actn:** 4	**Obj Strk:**										
1117	**104449022**	24.746	08/01/2015 21:05	REAR END, SLOW OR STOP	$ 5000	0	0	0	0	1	5	1	1	0	0	
Unit	**1 :** 1	**Alchl/Drgs:** 0	**Speed:** 45 MPH	**Dir:** E	**Veh Mnvr/Ped Actn:** 4	**Obj Strk:**										
Unit	**2 :** 4	**Alchl/Drgs:** 0	**Speed:** 10 MPH	**Dir:** E	**Veh Mnvr/Ped Actn:** 11	**Obj Strk:**										
1118	**104152883**	24.755	09/12/2014 13:50	REAR END, SLOW OR STOP	$ 1000	0	0	0	1	1	1	1	3	0	0	
Unit	**1 :** 1	**Alchl/Drgs:** 0	**Speed:** 60 MPH	**Dir:** W	**Veh Mnvr/Ped Actn:** 5	**Obj Strk:**										
Unit	**2 :** 1	**Alchl/Drgs:** 0	**Speed:** 55 MPH	**Dir:** W	**Veh Mnvr/Ped Actn:** 4	**Obj Strk:**										
1119	**104685025**	24.755	03/24/2016 16:45	MOVABLE OBJECT	$ 4000	0	0	0	0	1	1	1	5	0	0	
Unit	**1 :** 1	**Alchl/Drgs:** 0	**Speed:** 60 MPH	**Dir:** E	**Veh Mnvr/Ped Actn:** 4	**Obj Strk:** 18										
1120	**104825030**	24.755	08/20/2016 14:13	REAR END, SLOW OR STOP	$ 12500	0	0	0	0	2	1	2	1	0	0	
Unit	**1 :** 10	**Alchl/Drgs:** 0	**Speed:** 50 MPH	**Dir:** W	**Veh Mnvr/Ped Actn:** 4	**Obj Strk:**										
Unit	**2 :** 1	**Alchl/Drgs:** 0	**Speed:** 50 MPH	**Dir:** W	**Veh Mnvr/Ped Actn:** 11	**Obj Strk:**										
Unit	**3 :** 1	**Alchl/Drgs:** 0	**Speed:** 50 MPH	**Dir:** W	**Veh Mnvr/Ped Actn:** 11	**Obj Strk:**										
1121	**104931694**	24.755	11/26/2016 12:30	REAR END, SLOW OR STOP	$ 5200	0	0	0	0	1	1	1	1	0	0	
Unit	**1 :** 1	**Alchl/Drgs:** 0	**Speed:** 60 MPH	**Dir:** S	**Veh Mnvr/Ped Actn:** 4	**Obj Strk:**										
Unit	**2 :** 2	**Alchl/Drgs:** 0	**Speed:** 55 MPH	**Dir:** S	**Veh Mnvr/Ped Actn:** 11	**Obj Strk:**										
Unit	**3 :** 4	**Alchl/Drgs:** 0	**Speed:** 35 MPH	**Dir:** S	**Veh Mnvr/Ped Actn:** 4	**Obj Strk:**										
1122	**104931693**	24.755	11/26/2016 12:31	REAR END, SLOW OR STOP	$ 9000	0	0	0	0	1	1	1	1	0	0	
Unit	**1 :** 4	**Alchl/Drgs:** 0	**Speed:** 60 MPH	**Dir:** S	**Veh Mnvr/Ped Actn:** 4	**Obj Strk:**										
Unit	**2 :** 1	**Alchl/Drgs:** 0	**Speed:** 35 MPH	**Dir:** S	**Veh Mnvr/Ped Actn:** 11	**Obj Strk:**										
Unit	**3 :** 4	**Alchl/Drgs:** 0	**Speed:** 0 MPH	**Dir:** S	**Veh Mnvr/Ped Actn:** 1	**Obj Strk:**										
Unit	**4 :** 1	**Alchl/Drgs:** 0	**Speed:** 0 MPH	**Dir:** S	**Veh Mnvr/Ped Actn:** 1	**Obj Strk:**										

DocuSign Envelope ID: 5C03745C-4B01-4834-A65D-B77F558A4F46

North Carolina Department of Transportation
Traffic Engineering Accident Analysis System
Strip Analysis Report

Acc No	Crash ID	Milepost	Date	Accident Type	Total Damage	Injuries F	A	B	C	Condition R	L	W	Road Ch	Ci	Trfc Ctl Dv	Op
1123	**105019372**	24.755	02/24/2017 18:02	REAR END, SLOW OR STOP	$ 8100	0	0	0	1	1	3	1	1	0	0	
Unit	**1 :** 1	**Alchl/Drgs:** 0	**Speed:** 45 MPH	**Dir:** W	**Veh Mnvr/Ped Actn:** 4	**Obj Strk:**										
Unit	**2 :** 2	**Alchl/Drgs:** 0	**Speed:** 45 MPH	**Dir:** W	**Veh Mnvr/Ped Actn:** 11	**Obj Strk:**										
1124	**105050251**	24.755	03/24/2017 14:49	REAR END, SLOW OR STOP	$ 600	0	0	0	0	1	1	1	1	0	0	
Unit	**1 :** 32	**Alchl/Drgs:** 7	**Speed:** 30 MPH	**Dir:** E	**Veh Mnvr/Ped Actn:** 4	**Obj Strk:**										
Unit	**2 :** 1	**Alchl/Drgs:** 0	**Speed:** 35 MPH	**Dir:** E	**Veh Mnvr/Ped Actn:** 11	**Obj Strk:**										
1125	**105134946**	24.755	06/16/2017 16:34	REAR END, SLOW OR STOP	$ 3000	0	0	0	0	1	1	1	1	0	0	
Unit	**1 :** 4	**Alchl/Drgs:** 0	**Speed:** 50 MPH	**Dir:** E	**Veh Mnvr/Ped Actn:** 4	**Obj Strk:**										
Unit	**2 :** 1	**Alchl/Drgs:** 0	**Speed:** 40 MPH	**Dir:** E	**Veh Mnvr/Ped Actn:** 11	**Obj Strk:**										
1126	**105063019**	24.757	04/04/2017 17:26	REAR END, SLOW OR STOP	$ 1500	0	0	0	0	1	1	1	1	0	0	
Unit	**1 :** 1	**Alchl/Drgs:** 0	**Speed:** 55 MPH	**Dir:** W	**Veh Mnvr/Ped Actn:** 4	**Obj Strk:**										
Unit	**2 :** 1	**Alchl/Drgs:** 0	**Speed:** 50 MPH	**Dir:** W	**Veh Mnvr/Ped Actn:** 4	**Obj Strk:**										
1127	**105640132**	24.757	10/17/2018 17:17	REAR END, SLOW OR STOP	$ 1500	0	0	0	1	1	1	1	1	0	0	
Unit	**1 :** 4	**Alchl/Drgs:** 0	**Speed:** 35 MPH	**Dir:** W	**Veh Mnvr/Ped Actn:** 4	**Obj Strk:**										
Unit	**2 :** 1	**Alchl/Drgs:** 0	**Speed:** 30 MPH	**Dir:** W	**Veh Mnvr/Ped Actn:** 11	**Obj Strk:**										
1128	**104896102**	24.759	10/27/2016 17:47	REAR END, SLOW OR STOP	$ 7000	0	0	0	0	1	1	1	1	0	0	
Unit	**1 :** 1	**Alchl/Drgs:** 0	**Speed:** 50 MPH	**Dir:** W	**Veh Mnvr/Ped Actn:** 4	**Obj Strk:**										
Unit	**2 :** 1	**Alchl/Drgs:** 0	**Speed:** 40 MPH	**Dir:** W	**Veh Mnvr/Ped Actn:** 11	**Obj Strk:**										
1129	**104937718**	24.759	12/05/2016 17:05	REAR END, SLOW OR STOP	$ 5000	0	0	0	0	2	1	3	1	0	0	
Unit	**1 :** 4	**Alchl/Drgs:** 0	**Speed:** 45 MPH	**Dir:** W	**Veh Mnvr/Ped Actn:** 4	**Obj Strk:**										
Unit	**2 :** 4	**Alchl/Drgs:** 0	**Speed:** 40 MPH	**Dir:** W	**Veh Mnvr/Ped Actn:** 11	**Obj Strk:**										
1130	**105048197**	24.759	03/24/2017 14:25	OVERTURN/ROLLOVER	$ 5000	0	0	0	1	1	1	1	1	0	0	
Unit	**1 :** 20	**Alchl/Drgs:** 0	**Speed:** 45 MPH	**Dir:** W	**Veh Mnvr/Ped Actn:** 4	**Obj Strk:**										
1131	**105296480**	24.759	11/17/2017 18:27	REAR END, SLOW OR STOP	$ 18000	0	0	0	1	1	5	1	1	0	0	
Unit	**1 :** 2	**Alchl/Drgs:** 0	**Speed:** 60 MPH	**Dir:** W	**Veh Mnvr/Ped Actn:** 4	**Obj Strk:**										
Unit	**2 :** 4	**Alchl/Drgs:** 0	**Speed:** 45 MPH	**Dir:** W	**Veh Mnvr/Ped Actn:** 11	**Obj Strk:**										
Unit	**3 :** 5	**Alchl/Drgs:** 0	**Speed:** 45 MPH	**Dir:** W	**Veh Mnvr/Ped Actn:** 11	**Obj Strk:**										

DocuSign Envelope ID: 5C03745C-4B01-4834-A65D-B77F558A4F46

North Carolina Department of Transportation
Traffic Engineering Accident Analysis System
Strip Analysis Report

Acc No	Crash ID	Milepost	Date	Accident Type	Total Damage	Injuries F	A	B	C	Condition R	L	W	Road Ch	Ci	Trfc Ctl Dv	Op
1132	**105554933**	24.759	07/28/2018 18:19	REAR END, SLOW OR STOP	$ 2000	0	0	0	0	1	1	1	1	0	0	
Unit	**1 :** 2	**Alchl/Drgs:** 0	**Speed:** 30 MPH	**Dir:** W	**Veh Mnvr/Ped Actn:** 4	**Obj Strk:**										
Unit	**2 :** 1	**Alchl/Drgs:** 0	**Speed:** 25 MPH	**Dir:** W	**Veh Mnvr/Ped Actn:** 1	**Obj Strk:**										
1133	**105276430**	24.760	11/01/2017 21:14	OTHER COLLISION WITH VEHICLE	$ 1010	0	0	0	0	1	5	1	3	0	0	
Unit	**1 :** 14	**Alchl/Drgs:** 0	**Speed:** 0 MPH	**Dir:** W	**Veh Mnvr/Ped Actn:** 1	**Obj Strk:**										
Unit	**2 :** 2	**Alchl/Drgs:** 0	**Speed:** 0 MPH	**Dir:** W	**Veh Mnvr/Ped Actn:** 1	**Obj Strk:**										
1134	**105125779**	24.762	06/07/2017 18:21	REAR END, SLOW OR STOP	$ 5000	0	0	0	0	1	1	1	1	0	0	
Unit	**1 :** 5	**Alchl/Drgs:** 0	**Speed:** 50 MPH	**Dir:** W	**Veh Mnvr/Ped Actn:** 4	**Obj Strk:**										
Unit	**2 :** 4	**Alchl/Drgs:** 0	**Speed:** 50 MPH	**Dir:** W	**Veh Mnvr/Ped Actn:** 11	**Obj Strk:**										
1135	**105660485**	24.764	10/25/2018 17:57	SIDESWIPE, SAME DIRECTION	$ 1500	0	0	0	0	1	1	2	3	0	0	
Unit	**1 :** 4	**Alchl/Drgs:** 0	**Speed:** 35 MPH	**Dir:** E	**Veh Mnvr/Ped Actn:** 5	**Obj Strk:**										
Unit	**2 :** 1	**Alchl/Drgs:** 0	**Speed:** 35 MPH	**Dir:** E	**Veh Mnvr/Ped Actn:** 4	**Obj Strk:**										
1136	**105086953**	24.768	04/23/2017 21:03	FIXED OBJECT	$ 3000	0	0	0	0	2	5	3	7	0	0	
Unit	**1 :** 1	**Alchl/Drgs:** 0	**Speed:** 60 MPH	**Dir:** E	**Veh Mnvr/Ped Actn:** 4	**Obj Strk:** 44										
1137	**105462720**	24.769	04/29/2018 13:05	REAR END, SLOW OR STOP	$ 2000	0	0	0	3	1	1	1	3	0	0	
Unit	**1 :** 4	**Alchl/Drgs:** 0	**Speed:** 15 MPH	**Dir:** E	**Veh Mnvr/Ped Actn:** 11	**Obj Strk:**										
Unit	**2 :** 1	**Alchl/Drgs:** 0	**Speed:** 15 MPH	**Dir:** E	**Veh Mnvr/Ped Actn:** 11	**Obj Strk:**										
Unit	**3 :** 1	**Alchl/Drgs:** 0	**Speed:** 25 MPH	**Dir:** E	**Veh Mnvr/Ped Actn:** 4	**Obj Strk:**										
1138	**104193293**	24.774	10/18/2014 14:13	REAR END, SLOW OR STOP	$ 3300	0	0	0	1	1	1	1	1	0	0	
Unit	**1 :** 1	**Alchl/Drgs:** 0	**Speed:** 60 MPH	**Dir:** N	**Veh Mnvr/Ped Actn:** 4	**Obj Strk:**										
Unit	**2 :** 4	**Alchl/Drgs:** 0	**Speed:** 60 MPH	**Dir:** N	**Veh Mnvr/Ped Actn:** 11	**Obj Strk:**										
1139	**104966411**	24.810	01/03/2017 06:10	REAR END, SLOW OR STOP	$ 10500	0	0	0	0	2	5	2	3	0	0	
Unit	**1 :** 5	**Alchl/Drgs:** 0	**Speed:** 60 MPH	**Dir:** E	**Veh Mnvr/Ped Actn:** 4	**Obj Strk:**										
Unit	**2 :** 2	**Alchl/Drgs:** 0	**Speed:** 60 MPH	**Dir:** E	**Veh Mnvr/Ped Actn:** 1	**Obj Strk:**										
Unit	**3 :** 2	**Alchl/Drgs:** 0	**Speed:** 60 MPH	**Dir:** E	**Veh Mnvr/Ped Actn:** 4	**Obj Strk:**										
1140	**105680892**	24.810	11/18/2018 19:01	REAR END, SLOW OR STOP	$ 3000	0	0	0	0	1	5	1	3	0	0	
Unit	**1 :** 5	**Alchl/Drgs:** 0	**Speed:** 30 MPH	**Dir:** E	**Veh Mnvr/Ped Actn:** 11	**Obj Strk:**										
Unit	**2 :** 4	**Alchl/Drgs:** 0	**Speed:** 30 MPH	**Dir:** E	**Veh Mnvr/Ped Actn:** 11	**Obj Strk:**										

All data presented in this report comes explicitly from the Traffic Engineering Accident Analysis System based upon va criteria provided by the report's creator. The onus is strictly upon the user of this report to exercise due diligence in in and further representing this data.

DocuSign Envelope ID: 5C03745C-4B01-4834-A65D-B77F558A4F46

North Carolina Department of Transportation
Traffic Engineering Accident Analysis System
Strip Analysis Report

Acc No	Crash ID	Milepost	Date	Accident Type	Total Damage	Injuries F	A	B	C	Condition R	L	W	Road Ch	Ci	Trfc Ctl Dv	Op
1141	**104366531**	24.828	05/01/2015 15:44	REAR END, SLOW OR STOP	$ 1000	0	0	0	0	1	1	1	3	0	0	
Unit	**1 :** 1	**Alchl/Drgs:** 0	**Speed:** 60 MPH	**Dir:** W	**Veh Mnvr/Ped Actn:** 4	**Obj Strk:**										
Unit	**2 :** 4	**Alchl/Drgs:** 0	**Speed:** 60 MPH	**Dir:** W	**Veh Mnvr/Ped Actn:** 11	**Obj Strk:**										
1142	**104785910**	24.830	07/08/2016 14:44	REAR END, SLOW OR STOP	$ 6000	0	0	0	0	1	1	1	1	0	0	
Unit	**1 :** 1	**Alchl/Drgs:** 0	**Speed:** 40 MPH	**Dir:** W	**Veh Mnvr/Ped Actn:** 5	**Obj Strk:**										
Unit	**2 :** 1	**Alchl/Drgs:** 0	**Speed:** 40 MPH	**Dir:** W	**Veh Mnvr/Ped Actn:** 4	**Obj Strk:**										
1143	**104890550**	24.830	10/20/2016 10:42	REAR END, SLOW OR STOP	$ 11000	0	0	0	1	1	1	1	6	0	0	
Unit	**1 :** 2	**Alchl/Drgs:** 0	**Speed:** 60 MPH	**Dir:** W	**Veh Mnvr/Ped Actn:** 4	**Obj Strk:**										
Unit	**2 :** 4	**Alchl/Drgs:** 0	**Speed:** 60 MPH	**Dir:** W	**Veh Mnvr/Ped Actn:** 1	**Obj Strk:**										
Unit	**3 :** 4	**Alchl/Drgs:** 0	**Speed:** 60 MPH	**Dir:** W	**Veh Mnvr/Ped Actn:** 1	**Obj Strk:**										
1144	**104935425**	24.830	12/05/2016 10:18	MOVABLE OBJECT	$ 1000	0	0	0	0	1	1	2	7	0	0	
Unit	**1 :** 2	**Alchl/Drgs:** 0	**Speed:** 60 MPH	**Dir:** W	**Veh Mnvr/Ped Actn:** 4	**Obj Strk:** 18										
Unit	**2 :** 1	**Alchl/Drgs:** 0	**Speed:** 60 MPH	**Dir:** W	**Veh Mnvr/Ped Actn:** 4	**Obj Strk:** 18										
1145	**105040263**	24.830	03/16/2017 16:06	REAR END, SLOW OR STOP	$ 5500	0	0	0	0	1	1	1	1	0	0	
Unit	**1 :** 1	**Alchl/Drgs:** 0	**Speed:** 30 MPH	**Dir:** W	**Veh Mnvr/Ped Actn:** 4	**Obj Strk:**										
Unit	**2 :** 4	**Alchl/Drgs:** 0	**Speed:** 30 MPH	**Dir:** W	**Veh Mnvr/Ped Actn:** 11	**Obj Strk:**										
1146	**105347217**	24.830	01/10/2018 08:08	REAR END, SLOW OR STOP	$ 2300	0	0	0	0	2	1	2	1	0	0	
Unit	**1 :** 12	**Alchl/Drgs:** 0	**Speed:** 40 MPH	**Dir:** N	**Veh Mnvr/Ped Actn:** 4	**Obj Strk:**										
Unit	**2 :** 4	**Alchl/Drgs:** 0	**Speed:** 35 MPH	**Dir:** N	**Veh Mnvr/Ped Actn:** 5	**Obj Strk:**										
1147	**104112993**	24.838	07/25/2014 20:53	FIXED OBJECT	$ 4400	0	0	0	0	2	5	3	7	1	0	
Unit	**1 :** 1	**Alchl/Drgs:** 0	**Speed:** 55 MPH	**Dir:** E	**Veh Mnvr/Ped Actn:** 4	**Obj Strk:** 44										
1148	**104324853**	24.838	03/18/2015 07:35	REAR END, SLOW OR STOP	$ 2000	0	0	0	0	1	1	2	8	0	0	
Unit	**1 :** 1	**Alchl/Drgs:** 0	**Speed:** 25 MPH	**Dir:** W	**Veh Mnvr/Ped Actn:** 4	**Obj Strk:**										
Unit	**2 :** 1	**Alchl/Drgs:** 0	**Speed:** 25 MPH	**Dir:** W	**Veh Mnvr/Ped Actn:** 11	**Obj Strk:**										
1149	**104436121**	24.838	07/18/2015 15:59	REAR END, SLOW OR STOP	$ 1900	0	0	0	0	2	1	3	1	0	0	
Unit	**1 :** 1	**Alchl/Drgs:** 0	**Speed:** 50 MPH	**Dir:** N	**Veh Mnvr/Ped Actn:** 4	**Obj Strk:**										
Unit	**2 :** 4	**Alchl/Drgs:** 0	**Speed:** 40 MPH	**Dir:** N	**Veh Mnvr/Ped Actn:** 4	**Obj Strk:**										

All data presented in this report comes explicitly from the Traffic Engineering Accident Analysis System based upon va criteria provided by the report's creator. The onus is strictly upon the user of this report to exercise due diligence in in and further representing this data.

DocuSign Envelope ID: 5C03745C-4B01-4834-A65D-B77F558A4F46

North Carolina Department of Transportation
Traffic Engineering Accident Analysis System
Strip Analysis Report

Acc No	Crash ID	Milepost	Date	Accident Type	Total Damage	Injuries F	A	B	C	Condition R	L	W	Road Ch	Ci	Trfc Ctl Dv	Op
1150	**104491186**	24.838	09/17/2015 08:11	OTHER COLLISION WITH VEHICLE	$ 5000	0	0	0	0	1	1	1	8	0	0	
Unit	**1 :** 1	**Alchl/Drgs:** 0	**Speed:** 50 MPH	**Dir:** W	**Veh Mnvr/Ped Actn:** 5	**Obj Strk:**										
Unit	**2 :** 4	**Alchl/Drgs:** 0	**Speed:** 35 MPH	**Dir:** W	**Veh Mnvr/Ped Actn:** 1	**Obj Strk:**										
1151	**104583566**	24.838	12/11/2015 15:04	REAR END, SLOW OR STOP	$ 4500	0	0	0	0	1	1	1	1	0	0	
Unit	**1 :** 1	**Alchl/Drgs:** 0	**Speed:** 50 MPH	**Dir:** NW	**Veh Mnvr/Ped Actn:** 11	**Obj Strk:**										
Unit	**2 :** 1	**Alchl/Drgs:** 0	**Speed:** 60 MPH	**Dir:** NW	**Veh Mnvr/Ped Actn:** 4	**Obj Strk:**										
1152	**104653739**	24.838	02/17/2016 17:00	FIXED OBJECT	$ 12500	0	0	0	0	1	1	1	1	0	0	
Unit	**1 :** 2	**Alchl/Drgs:** 0	**Speed:** 60 MPH	**Dir:** N	**Veh Mnvr/Ped Actn:** 4	**Obj Strk:** 42										
Unit	**2 :** 2	**Alchl/Drgs:** 0	**Speed:** 60 MPH	**Dir:** N	**Veh Mnvr/Ped Actn:** 4	**Obj Strk:**										
1153	**104664367**	24.838	03/02/2016 07:53	REAR END, SLOW OR STOP	$ 75	0	0	0	0	1	1	2	3	0	0	
Unit	**1 :** 1	**Alchl/Drgs:** 0	**Speed:** 45 MPH	**Dir:** W	**Veh Mnvr/Ped Actn:** 11	**Obj Strk:**										
Unit	**2 :** 1	**Alchl/Drgs:** 0	**Speed:** 45 MPH	**Dir:** W	**Veh Mnvr/Ped Actn:** 1	**Obj Strk:**										
1154	**104725439**	24.838	05/03/2016 10:32	REAR END, SLOW OR STOP	$ 1100	0	0	0	0	1	1	1	4	0	0	
Unit	**1 :** 12	**Alchl/Drgs:** 0	**Speed:** 55 MPH	**Dir:** W	**Veh Mnvr/Ped Actn:** 4	**Obj Strk:**										
Unit	**2 :** 2	**Alchl/Drgs:** 0	**Speed:** 60 MPH	**Dir:** W	**Veh Mnvr/Ped Actn:** 4	**Obj Strk:**										
1155	**104726351**	24.838	05/06/2016 19:05	REAR END, SLOW OR STOP	$ 1150	0	0	0	0	1	1	1	1	0	0	
Unit	**1 :** 4	**Alchl/Drgs:** 0	**Speed:** 35 MPH	**Dir:** W	**Veh Mnvr/Ped Actn:** 4	**Obj Strk:**										
Unit	**2 :** 1	**Alchl/Drgs:** 0	**Speed:** 30 MPH	**Dir:** W	**Veh Mnvr/Ped Actn:** 1	**Obj Strk:**										
1156	**104804901**	24.838	07/27/2016 18:07	REAR END, SLOW OR STOP	$ 700	0	0	0	0	1	1	1	3	0	0	
Unit	**1 :** 31	**Alchl/Drgs:** 0	**Speed:** 15 MPH	**Dir:** W	**Veh Mnvr/Ped Actn:** 5	**Obj Strk:**										
Unit	**2 :** 5	**Alchl/Drgs:** 0	**Speed:** 15 MPH	**Dir:** W	**Veh Mnvr/Ped Actn:** 11	**Obj Strk:**										
1157	**104951060**	24.838	12/15/2016 22:17	SIDESWIPE, SAME DIRECTION	$ 3200	0	0	0	0	1	1	1	3	0	0	
Unit	**1 :** 2	**Alchl/Drgs:** 0	**Speed:** 65 MPH	**Dir:** E	**Veh Mnvr/Ped Actn:** 5	**Obj Strk:** 42										
Unit	**2 :** 1	**Alchl/Drgs:** 0	**Speed:** 65 MPH	**Dir:** E	**Veh Mnvr/Ped Actn:** 4	**Obj Strk:**										
1158	**105134605**	24.838	06/15/2017 18:14	MOVABLE OBJECT	$ 500	0	0	0	0	1	1	1	1	0	0	
Unit	**1 :** 2	**Alchl/Drgs:** 0	**Speed:** 60 MPH	**Dir:** E	**Veh Mnvr/Ped Actn:** 4	**Obj Strk:** 18										

DocuSign Envelope ID: 5C03745C-4B01-4834-A65D-B77F558A4F46

North Carolina Department of Transportation
Traffic Engineering Accident Analysis System
Strip Analysis Report

Acc No	Crash ID	Milepost	Date	Accident Type	Total Damage	Injuries F	A	B	C	Condition R	L	W	Road Ch	Ci	Trfc Ctl Dv	Op
1159	**105696652**	24.838	12/02/2018 19:11	REAR END, SLOW OR STOP	$ 200	0	0	0	0	1	5	1	3	0	0	
Unit	**1 :** 4	**Alchl/Drgs:** 0	**Speed:** 10 MPH	**Dir:** E	**Veh Mnvr/Ped Actn:** 1	**Obj Strk:**										
Unit	**2 :** 1	**Alchl/Drgs:** 7	**Speed:** 20 MPH	**Dir:** E	**Veh Mnvr/Ped Actn:** 4	**Obj Strk:**										
1160	**104070618**	24.855	05/30/2014 16:00	REAR END, SLOW OR STOP	$ 3000	0	0	0	0	2	1	2	1	0	0	
Unit	**1 :** 2	**Alchl/Drgs:** 0	**Speed:** 45 MPH	**Dir:** N	**Veh Mnvr/Ped Actn:** 4	**Obj Strk:**										
Unit	**2 :** 10	**Alchl/Drgs:** 0	**Speed:** 40 MPH	**Dir:** N	**Veh Mnvr/Ped Actn:** 11	**Obj Strk:**										
1161	**104097749**	24.855	06/27/2014 04:09	REAR END, SLOW OR STOP	$ 4000	0	0	0	0	2	1	3	1	0	0	
Unit	**1 :** 1	**Alchl/Drgs:** 0	**Speed:** 50 MPH	**Dir:** W	**Veh Mnvr/Ped Actn:** 4	**Obj Strk:**										
Unit	**2 :** 1	**Alchl/Drgs:** 0	**Speed:** 50 MPH	**Dir:** W	**Veh Mnvr/Ped Actn:** 1	**Obj Strk:**										
1162	**104173321**	24.855	10/06/2014 14:35	FIXED OBJECT	$ 7900	0	0	0	1	1	1	2	1	0	0	
Unit	**1 :** 1	**Alchl/Drgs:** 0	**Speed:** 60 MPH	**Dir:** S	**Veh Mnvr/Ped Actn:** 4	**Obj Strk:** 42										
1163	**104215582**	24.855	11/17/2014 04:50	FIXED OBJECT	$ 5000	0	0	0	0	2	5	2	1	0	0	
Unit	**1 :** 1	**Alchl/Drgs:** 0	**Speed:** 55 MPH	**Dir:** S	**Veh Mnvr/Ped Actn:** 4	**Obj Strk:** 42										
1164	**104344159**	24.855	04/09/2015 08:14	SIDESWIPE, SAME DIRECTION	$ 3100	0	0	0	0	1	1	1	1	0	0	
Unit	**1 :** 1	**Alchl/Drgs:** 0	**Speed:** 60 MPH	**Dir:** E	**Veh Mnvr/Ped Actn:** 5	**Obj Strk:**										
Unit	**2 :** 2	**Alchl/Drgs:** 0	**Speed:** 55 MPH	**Dir:** E	**Veh Mnvr/Ped Actn:** 4	**Obj Strk:** 59										
1165	**104371549**	24.855	05/07/2015 16:55	SIDESWIPE, SAME DIRECTION	$ 6000	0	0	0	0	1	1	1	1	0	0	
Unit	**1 :** 1	**Alchl/Drgs:** 0	**Speed:** 20 MPH	**Dir:** W	**Veh Mnvr/Ped Actn:** 5	**Obj Strk:**										
Unit	**2 :** 1	**Alchl/Drgs:** 0	**Speed:** 25 MPH	**Dir:** W	**Veh Mnvr/Ped Actn:** 4	**Obj Strk:**										
1166	**104414322**	24.855	06/22/2015 17:07	REAR END, SLOW OR STOP	$ 2800	0	0	0	0	1	1	2	1	0	0	
Unit	**1 :** 1	**Alchl/Drgs:** 0	**Speed:** 0 MPH	**Dir:** S	**Veh Mnvr/Ped Actn:** 1	**Obj Strk:**										
Unit	**2 :** 1	**Alchl/Drgs:** 0	**Speed:** 15 MPH	**Dir:** S	**Veh Mnvr/Ped Actn:** 4	**Obj Strk:**										
1167	**104491989**	24.855	09/18/2015 15:02	REAR END, SLOW OR STOP	$ 4500	0	0	0	0	1	1	1	1	0	0	
Unit	**1 :** 2	**Alchl/Drgs:** 0	**Speed:** 60 MPH	**Dir:** W	**Veh Mnvr/Ped Actn:** 4	**Obj Strk:**										
Unit	**2 :** 2	**Alchl/Drgs:** 0	**Speed:** 60 MPH	**Dir:** W	**Veh Mnvr/Ped Actn:** 11	**Obj Strk:**										
Unit	**3 :** 4	**Alchl/Drgs:** 0	**Speed:** 60 MPH	**Dir:** W	**Veh Mnvr/Ped Actn:** 1	**Obj Strk:**										
Unit	**4 :** 4	**Alchl/Drgs:** 0	**Speed:** 60 MPH	**Dir:** W	**Veh Mnvr/Ped Actn:** 11	**Obj Strk:**										

All data presented in this report comes explicitly from the Traffic Engineering Accident Analysis System based upon va criteria provided by the report's creator. The onus is strictly upon the user of this report to exercise due diligence in in and further representing this data.

DocuSign Envelope ID: 5C03745C-4B01-4834-A65D-B77F558A4F46

North Carolina Department of Transportation
Traffic Engineering Accident Analysis System
Strip Analysis Report

Acc No	Crash ID	Milepost	Date	Accident Type	Total Damage	Injuries F	A	B	C	Condition R	L	W	Road Ch	Ci	Trfc Ctl Dv	Op
1168	**104522780**	24.855	10/17/2015 15:10	OVERTURN/ROLLOVER	$ 2000	0	0	0	1	1	1	1	3	0	0	
Unit	**1 :** 20	**Alchl/Drgs:** 0	**Speed:** 50 MPH	**Dir:** W	**Veh Mnvr/Ped Actn:** 4	**Obj Strk:**										
1169	**104538514**	24.855	10/30/2015 14:50	REAR END, SLOW OR STOP	$ 3200	0	0	0	0	1	1	1	1	0	0	
Unit	**1 :** 1	**Alchl/Drgs:** 0	**Speed:** 60 MPH	**Dir:** W	**Veh Mnvr/Ped Actn:** 4	**Obj Strk:**										
Unit	**2 :** 1	**Alchl/Drgs:** 0	**Speed:** 60 MPH	**Dir:** W	**Veh Mnvr/Ped Actn:** 11	**Obj Strk:**										
1170	**104566282**	24.855	11/24/2015 17:20	REAR END, SLOW OR STOP	$ 13000	0	0	0	0	1	5	1	2	0	0	
Unit	**1 :** 4	**Alchl/Drgs:** 0	**Speed:** 30 MPH	**Dir:** NW	**Veh Mnvr/Ped Actn:** 4	**Obj Strk:**										
Unit	**2 :** 4	**Alchl/Drgs:** 0	**Speed:** 45 MPH	**Dir:** NW	**Veh Mnvr/Ped Actn:** 4	**Obj Strk:**										
1171	**104691956**	24.855	04/02/2016 13:21	REAR END, SLOW OR STOP	$ 2400	0	0	0	0	1	1	1	1	0	0	
Unit	**1 :** 3	**Alchl/Drgs:** 0	**Speed:** 55 MPH	**Dir:** N	**Veh Mnvr/Ped Actn:** 4	**Obj Strk:**										
Unit	**2 :** 3	**Alchl/Drgs:** 0	**Speed:** 55 MPH	**Dir:** N	**Veh Mnvr/Ped Actn:** 11	**Obj Strk:**										
1172	**104739067**	24.855	05/15/2016 20:55	PEDESTRIAN	$ 5000	1	0	0	0	1	5	1	1	0	0	
Unit	**1 :** 14	**Alchl/Drgs:** 0	**Speed:** 60 MPH	**Dir:** W	**Veh Mnvr/Ped Actn:** 4	**Obj Strk:** 14										
Unit	**2 :** 32	**Alchl/Drgs:** 0	**Speed:** 60 MPH	**Dir:** W	**Veh Mnvr/Ped Actn:** 4	**Obj Strk:** 14										
Unit	**3 :** 1	**Alchl/Drgs:** 0	**Speed:** 60 MPH	**Dir:** W	**Veh Mnvr/Ped Actn:** 4	**Obj Strk:** 14										
Unit	**4 :** 24	**Alchl/Drgs:** 0	**Speed:** 0 MPH	**Dir:**	**Veh Mnvr/Ped Actn:**	**Obj Strk:** 14										
1173	**104786119**	24.855	07/08/2016 13:42	REAR END, SLOW OR STOP	$ 2100	0	0	0	1	1	1	1	1	0	0	
Unit	**1 :** 12	**Alchl/Drgs:** 0	**Speed:** 35 MPH	**Dir:** W	**Veh Mnvr/Ped Actn:** 4	**Obj Strk:**										
Unit	**2 :** 1	**Alchl/Drgs:** 0	**Speed:** 35 MPH	**Dir:** W	**Veh Mnvr/Ped Actn:** 11	**Obj Strk:**										
1174	**104873857**	24.855	10/09/2016 14:50	REAR END, SLOW OR STOP	$ 11000	0	0	0	0	1	1	1	1	0	0	
Unit	**1 :** 1	**Alchl/Drgs:** 0	**Speed:** 45 MPH	**Dir:** E	**Veh Mnvr/Ped Actn:** 4	**Obj Strk:**										
Unit	**2 :** 2	**Alchl/Drgs:** 0	**Speed:** 50 MPH	**Dir:** E	**Veh Mnvr/Ped Actn:** 11	**Obj Strk:**										
1175	**104960923**	24.855	12/26/2016 17:10	REAR END, SLOW OR STOP	$ 3500	0	0	0	2	1	2	1	1	0	0	
Unit	**1 :** 1	**Alchl/Drgs:** 0	**Speed:** 30 MPH	**Dir:** E	**Veh Mnvr/Ped Actn:** 4	**Obj Strk:**										
Unit	**2 :** 2	**Alchl/Drgs:** 0	**Speed:** 20 MPH	**Dir:** E	**Veh Mnvr/Ped Actn:** 11	**Obj Strk:**										
1176	**105113387**	24.855	05/23/2017 08:27	REAR END, SLOW OR STOP	$ 7000	0	0	0	0	2	1	3	3	0	0	
Unit	**1 :** 1	**Alchl/Drgs:** 0	**Speed:** 45 MPH	**Dir:** W	**Veh Mnvr/Ped Actn:** 4	**Obj Strk:**										
Unit	**2 :** 1	**Alchl/Drgs:** 0	**Speed:** 45 MPH	**Dir:** W	**Veh Mnvr/Ped Actn:** 11	**Obj Strk:**										

All data presented in this report comes explicitly from the Traffic Engineering Accident Analysis System based upon va criteria provided by the report's creator. The onus is strictly upon the user of this report to exercise due diligence in in and further representing this data.

DocuSign Envelope ID: 5C03745C-4B01-4834-A65D-B77F558A4F46

North Carolina Department of Transportation
Traffic Engineering Accident Analysis System
Strip Analysis Report

Acc No	Crash ID	Milepost	Date	Accident Type	Total Damage	Injuries F	A	B	C	Condition R	L	W	Road Ch	Ci	Trfc Ctl Dv	Op
1177	**105113807**	24.855	05/26/2017 18:46	REAR END, SLOW OR STOP	$ 9000	0	0	0	0	1	1	1	1	0	0	
Unit	**1 :** 1	**Alchl/Drgs:** 0	**Speed:** 60 MPH	**Dir:** W	**Veh Mnvr/Ped Actn:** 4	**Obj Strk:**										
Unit	**2 :** 4	**Alchl/Drgs:** 0	**Speed:** 60 MPH	**Dir:** W	**Veh Mnvr/Ped Actn:** 1	**Obj Strk:**										
1178	**105280034**	24.855	11/07/2017 08:02	REAR END, SLOW OR STOP	$ 6000	0	0	0	0	2	1	3	3	0	0	
Unit	**1 :** 1	**Alchl/Drgs:** 0	**Speed:** 40 MPH	**Dir:** W	**Veh Mnvr/Ped Actn:** 4	**Obj Strk:**										
Unit	**2 :** 4	**Alchl/Drgs:** 0	**Speed:** 40 MPH	**Dir:** W	**Veh Mnvr/Ped Actn:** 11	**Obj Strk:**										
1179	**105284295**	24.855	11/09/2017 07:50	REAR END, SLOW OR STOP	$ 18500	0	0	0	0	1	1	1	1	0	0	
Unit	**1 :** 4	**Alchl/Drgs:** 0	**Speed:** 50 MPH	**Dir:** W	**Veh Mnvr/Ped Actn:** 4	**Obj Strk:**										
Unit	**2 :** 1	**Alchl/Drgs:** 0	**Speed:** 40 MPH	**Dir:** W	**Veh Mnvr/Ped Actn:** 11	**Obj Strk:**										
Unit	**3 :** 2	**Alchl/Drgs:** 0	**Speed:** 45 MPH	**Dir:** W	**Veh Mnvr/Ped Actn:** 1	**Obj Strk:**										
Unit	**4 :** 2	**Alchl/Drgs:** 0	**Speed:** 45 MPH	**Dir:** W	**Veh Mnvr/Ped Actn:** 1	**Obj Strk:**										
1180	**105441394**	24.855	04/10/2018 15:38	SIDESWIPE, SAME DIRECTION	$ 11000	0	0	0	0	1	1	1	1	0	0	
Unit	**1 :** 1	**Alchl/Drgs:** 0	**Speed:** 45 MPH	**Dir:** W	**Veh Mnvr/Ped Actn:** 5	**Obj Strk:** 44										
Unit	**2 :** 2	**Alchl/Drgs:** 0	**Speed:** 45 MPH	**Dir:** W	**Veh Mnvr/Ped Actn:** 4	**Obj Strk:**										
1181	**105486654**	24.855	05/21/2018 16:34	REAR END, SLOW OR STOP	$ 1000	0	0	0	0	1	1	1	1	0	0	
Unit	**1 :** 4	**Alchl/Drgs:** 0	**Speed:** 15 MPH	**Dir:** W	**Veh Mnvr/Ped Actn:** 4	**Obj Strk:**										
Unit	**2 :** 4	**Alchl/Drgs:** 0	**Speed:** 15 MPH	**Dir:** W	**Veh Mnvr/Ped Actn:** 1	**Obj Strk:**										
1182	**105528418**	24.855	06/29/2018 17:19	REAR END, SLOW OR STOP	$ 10000	0	0	0	0	1	1	1	1	0	0	
Unit	**1 :** 2	**Alchl/Drgs:** 0	**Speed:** 50 MPH	**Dir:** W	**Veh Mnvr/Ped Actn:** 4	**Obj Strk:**										
Unit	**2 :** 1	**Alchl/Drgs:** 0	**Speed:** 45 MPH	**Dir:** W	**Veh Mnvr/Ped Actn:** 1	**Obj Strk:**										
1183	**105538426**	24.855	07/11/2018 06:59	FIXED OBJECT	$ 9500	0	0	0	1	1	1	1	1	0	0	
Unit	**1 :** 1	**Alchl/Drgs:** 0	**Speed:** 60 MPH	**Dir:** S	**Veh Mnvr/Ped Actn:** 4	**Obj Strk:** 44										
1184	**105649574**	24.855	10/23/2018 18:14	REAR END, SLOW OR STOP	$ 4500	0	0	0	0	1	5	1	1	0	0	
Unit	**1 :** 1	**Alchl/Drgs:** 0	**Speed:** 35 MPH	**Dir:** E	**Veh Mnvr/Ped Actn:** 4	**Obj Strk:**										
Unit	**2 :** 4	**Alchl/Drgs:** 0	**Speed:** 35 MPH	**Dir:** E	**Veh Mnvr/Ped Actn:** 11	**Obj Strk:**										
1185	**105660934**	24.855	11/02/2018 13:59	REAR END, SLOW OR STOP	$ 1500	0	0	0	0	1	1	1	1	0	0	
Unit	**1 :** 1	**Alchl/Drgs:** 0	**Speed:** 45 MPH	**Dir:** E	**Veh Mnvr/Ped Actn:** 4	**Obj Strk:**										
Unit	**2 :** 5	**Alchl/Drgs:** 0	**Speed:** 40 MPH	**Dir:** E	**Veh Mnvr/Ped Actn:** 11	**Obj Strk:**										

DocuSign Envelope ID: 5C03745C-4B01-4834-A65D-B77F558A4F46

North Carolina Department of Transportation
Traffic Engineering Accident Analysis System
Strip Analysis Report

Acc No	Crash ID	Milepost	Date	Accident Type	Total Damage	Injuries F	A	B	C	Condition R	L	W	Road Ch	Ci	Trfc Ctl Dv	Op
1186	**105717494**	24.855	12/19/2018 21:11	REAR END, SLOW OR STOP	$ 2200	0	0	0	0	1	5	1	3	0	0	
Unit	**1 :** 1	**Alchl/Drgs:** 0	**Speed:** 55 MPH	**Dir:** E	**Veh Mnvr/Ped Actn:** 4	**Obj Strk:**										
Unit	**2 :** 1	**Alchl/Drgs:** 0	**Speed:** 55 MPH	**Dir:** E	**Veh Mnvr/Ped Actn:** 11	**Obj Strk:**										
1187	**105640088**	24.857	10/17/2018 08:11	REAR END, SLOW OR STOP	$ 4500	0	0	0	0	1	1	2	1	0	0	
Unit	**1 :** 2	**Alchl/Drgs:** 0	**Speed:** 45 MPH	**Dir:** N	**Veh Mnvr/Ped Actn:** 4	**Obj Strk:**										
Unit	**2 :** 4	**Alchl/Drgs:** 0	**Speed:** 45 MPH	**Dir:** N	**Veh Mnvr/Ped Actn:** 1	**Obj Strk:**										
1188	**105681005**	24.857	11/19/2018 07:42	REAR END, SLOW OR STOP	$ 3800	0	0	0	0	1	1	1	1	0	0	
Unit	**1 :** 14	**Alchl/Drgs:** 0	**Speed:** 55 MPH	**Dir:** W	**Veh Mnvr/Ped Actn:** 4	**Obj Strk:**										
Unit	**2 :** 1	**Alchl/Drgs:** 0	**Speed:** 55 MPH	**Dir:** W	**Veh Mnvr/Ped Actn:** 11	**Obj Strk:**										
1189	**105685743**	24.857	11/21/2018 10:52	REAR END, SLOW OR STOP	$ 800	0	0	0	1	1	1	1	1	0	0	
Unit	**1 :** 2	**Alchl/Drgs:** 0	**Speed:** 60 MPH	**Dir:** W	**Veh Mnvr/Ped Actn:** 4	**Obj Strk:**										
Unit	**2 :** 4	**Alchl/Drgs:** 0	**Speed:** 60 MPH	**Dir:** W	**Veh Mnvr/Ped Actn:** 1	**Obj Strk:**										
1190	**105412949**	24.859	03/15/2018 17:15	REAR END, SLOW OR STOP	$ 5500	0	0	0	0	1	1	1	1	0	0	
Unit	**1 :** 4	**Alchl/Drgs:** 0	**Speed:** 50 MPH	**Dir:** W	**Veh Mnvr/Ped Actn:** 4	**Obj Strk:**										
Unit	**2 :** 4	**Alchl/Drgs:** 0	**Speed:** 45 MPH	**Dir:** W	**Veh Mnvr/Ped Actn:** 4	**Obj Strk:**										
Unit	**3 :** 1	**Alchl/Drgs:** 0	**Speed:** 0 MPH	**Dir:** W	**Veh Mnvr/Ped Actn:** 1	**Obj Strk:**										
Unit	**4 :** 4	**Alchl/Drgs:** 0	**Speed:** 0 MPH	**Dir:** W	**Veh Mnvr/Ped Actn:** 1	**Obj Strk:**										
1191	**105459177**	24.859	04/22/2018 19:58	SIDESWIPE, SAME DIRECTION	$ 3500	0	0	0	0	1	5	2	1	0	0	
Unit	**1 :** 11	**Alchl/Drgs:** 7	**Speed:** 60 MPH	**Dir:** W	**Veh Mnvr/Ped Actn:** 4	**Obj Strk:**										
Unit	**2 :** 1	**Alchl/Drgs:** 0	**Speed:** 55 MPH	**Dir:** W	**Veh Mnvr/Ped Actn:** 4	**Obj Strk:**										
1192	**105168284**	24.870	07/20/2017 15:26	REAR END, SLOW OR STOP	$ 2700	0	0	0	0	1	1	1	1	0	0	
Unit	**1 :** 2	**Alchl/Drgs:** 0	**Speed:** 60 MPH	**Dir:** W	**Veh Mnvr/Ped Actn:** 4	**Obj Strk:**										
Unit	**2 :** 1	**Alchl/Drgs:** 0	**Speed:** 60 MPH	**Dir:** W	**Veh Mnvr/Ped Actn:** 1	**Obj Strk:**										
Unit	**3 :** 2	**Alchl/Drgs:** 0	**Speed:** 60 MPH	**Dir:** W	**Veh Mnvr/Ped Actn:** 1	**Obj Strk:**										
1193	**105583675**	24.870	08/24/2018 13:37	SIDESWIPE, SAME DIRECTION	$ 3000	0	0	0	1	1	1	1	3	0	0	
Unit	**1 :** 2	**Alchl/Drgs:** 0	**Speed:** 60 MPH	**Dir:** W	**Veh Mnvr/Ped Actn:** 5	**Obj Strk:**										
Unit	**2 :** 1	**Alchl/Drgs:** 0	**Speed:** 60 MPH	**Dir:** W	**Veh Mnvr/Ped Actn:** 11	**Obj Strk:**										
1194	**104535881**	24.878	10/29/2015 07:50	REAR END, SLOW OR STOP	$ 1200	0	0	0	1	1	1	2	3	0	0	
Unit	**1 :** 4	**Alchl/Drgs:** 0	**Speed:** 55 MPH	**Dir:** NW	**Veh Mnvr/Ped Actn:** 4	**Obj Strk:**										

All data presented in this report comes explicitly from the Traffic Engineering Accident Analysis System based upon va criteria provided by the report's creator. The onus is strictly upon the user of this report to exercise due diligence in in and further representing this data.

DocuSign Envelope ID: 5C03745C-4B01-4834-A65D-B77F558A4F46

North Carolina Department of Transportation
Traffic Engineering Accident Analysis System
Strip Analysis Report

Acc No	Crash ID	Milepost	Date	Accident Type	Total Damage	Injuries F	A	B	C	Condition R	L	W	Road Ch	Ci	Trfc Ctl Dv	Op
Unit	**2 :** 4	**Alchl/Drgs:**	0	**Speed:** 5 MPH	**Dir:** NW	**Veh Mnvr/Ped Actn:**				11			**Obj Strk:**			
1195	**104535880**	24.878	10/29/2015 07:51	REAR END, SLOW OR STOP	$ 1200	0	0	0	1	1	1	2	3	0	0	
Unit	**1 :** 4	**Alchl/Drgs:**	0	**Speed:** 55 MPH	**Dir:** NW	**Veh Mnvr/Ped Actn:**				4			**Obj Strk:**			
Unit	**2 :** 4	**Alchl/Drgs:**	0	**Speed:** 0 MPH	**Dir:** NW	**Veh Mnvr/Ped Actn:**				1			**Obj Strk:**			
1196	**104268102**	24.880	01/12/2015 19:00	SIDESWIPE, SAME DIRECTION	$ 1000	0	0	0	0	2	5	2	1	0	0	
Unit	**1 :** 4	**Alchl/Drgs:**	0	**Speed:** 50 MPH	**Dir:** S	**Veh Mnvr/Ped Actn:**				5			**Obj Strk:**			
Unit	**2 :** 1	**Alchl/Drgs:**	0	**Speed:** 60 MPH	**Dir:** S	**Veh Mnvr/Ped Actn:**				4			**Obj Strk:**			
1197	**104209125**	24.888	11/10/2014 09:12	REAR END, SLOW OR STOP	$ 3000	0	0	0	0	1	1	1	5	0	0	
Unit	**1 :** 11	**Alchl/Drgs:**	0	**Speed:** 50 MPH	**Dir:** W	**Veh Mnvr/Ped Actn:**				4			**Obj Strk:**		42	
Unit	**2 :** 2	**Alchl/Drgs:**	0	**Speed:** 55 MPH	**Dir:** W	**Veh Mnvr/Ped Actn:**				1			**Obj Strk:**			
1198	**104235109**	24.888	12/02/2014 18:14	REAR END, SLOW OR STOP	$ 6500	0	0	0	0	1	5	2	3	0	0	
Unit	**1 :** 1	**Alchl/Drgs:**	0	**Speed:** 50 MPH	**Dir:** W	**Veh Mnvr/Ped Actn:**				5			**Obj Strk:**			
Unit	**2 :** 2	**Alchl/Drgs:**	0	**Speed:** 50 MPH	**Dir:** W	**Veh Mnvr/Ped Actn:**				11			**Obj Strk:**			
Unit	**3 :** 12	**Alchl/Drgs:**	0	**Speed:** 55 MPH	**Dir:** W	**Veh Mnvr/Ped Actn:**				4			**Obj Strk:**			
1199	**104572754**	24.888	12/02/2015 15:03	REAR END, SLOW OR STOP	$ 8500	0	0	0	1	1	1	2	1	0	0	
Unit	**1 :** 1	**Alchl/Drgs:**	0	**Speed:** 60 MPH	**Dir:** NW	**Veh Mnvr/Ped Actn:**				4			**Obj Strk:**			
Unit	**2 :** 4	**Alchl/Drgs:**	0	**Speed:** 50 MPH	**Dir:** NW	**Veh Mnvr/Ped Actn:**				4			**Obj Strk:**			
1200	**105417141**	24.888	03/19/2018 16:22	REAR END, SLOW OR STOP	$ 5000	0	0	0	0	1	1	1	1	0	0	
Unit	**1 :** 2	**Alchl/Drgs:**	0	**Speed:** 40 MPH	**Dir:** E	**Veh Mnvr/Ped Actn:**				4			**Obj Strk:**			
Unit	**2 :** 2	**Alchl/Drgs:**	0	**Speed:** 40 MPH	**Dir:** E	**Veh Mnvr/Ped Actn:**				1			**Obj Strk:**			
Unit	**3 :** 2	**Alchl/Drgs:**	0	**Speed:** 40 MPH	**Dir:** E	**Veh Mnvr/Ped Actn:**				1			**Obj Strk:**			
1201	**105652764**	24.888	10/28/2018 14:02	REAR END, SLOW OR STOP	$ 10000	0	0	0	2	1	1	1	5	0	0	
Unit	**1 :** 4	**Alchl/Drgs:**	0	**Speed:** 60 MPH	**Dir:** W	**Veh Mnvr/Ped Actn:**				4			**Obj Strk:**			
Unit	**2 :** 4	**Alchl/Drgs:**	0	**Speed:** 0 MPH	**Dir:** W	**Veh Mnvr/Ped Actn:**				1			**Obj Strk:**		59	
1202	**105266862**	24.890	10/23/2017 13:30	REAR END, SLOW OR STOP	$ 700	0	0	0	0	3	1	3	3	0	0	
Unit	**1 :** 2	**Alchl/Drgs:**	0	**Speed:** 35 MPH	**Dir:** NW	**Veh Mnvr/Ped Actn:**				4			**Obj Strk:**			
Unit	**2 :** 5	**Alchl/Drgs:**	0	**Speed:** 35 MPH	**Dir:** NW	**Veh Mnvr/Ped Actn:**				4			**Obj Strk:**			

DocuSign Envelope ID: 5C03745C-4B01-4834-A65D-B77F558A4F46

North Carolina Department of Transportation
Traffic Engineering Accident Analysis System
Strip Analysis Report

Acc No	Crash ID	Milepost	Date	Accident Type	Total Damage	Injuries F	A	B	C	Condition R	L	W	Road Ch	Ci	Trfc Ctl Dv	Op
1203	**104239726**	24.909	12/11/2014 17:22	REAR END, SLOW OR STOP	$ 800	0	0	0	0	1	5	2	1	0	0	
Unit	**1 :** 2	**Alchl/Drgs:** 0	**Speed:** 20 MPH	**Dir:** NW	**Veh Mnvr/Ped Actn:** 1	**Obj Strk:**										
Unit	**2 :** 4	**Alchl/Drgs:** 0	**Speed:** 20 MPH	**Dir:** NW	**Veh Mnvr/Ped Actn:** 4	**Obj Strk:**										
1204	**103987561**	24.938	02/26/2014 02:58	RAN OFF ROAD - LEFT	$ 17000	0	0	0	0	1	5	1	5	0	0	
Unit	**1 :** 10	**Alchl/Drgs:** 0	**Speed:** 60 MPH	**Dir:** W	**Veh Mnvr/Ped Actn:** 4	**Obj Strk:** 44										
1205	**104080643**	24.938	06/12/2014 16:25	REAR END, SLOW OR STOP	$ 4000	0	0	0	0	1	1	1	3	0	0	
Unit	**1 :** 4	**Alchl/Drgs:** 0	**Speed:** 35 MPH	**Dir:** W	**Veh Mnvr/Ped Actn:** 4	**Obj Strk:**										
Unit	**2 :** 1	**Alchl/Drgs:** 0	**Speed:** 35 MPH	**Dir:** W	**Veh Mnvr/Ped Actn:** 11	**Obj Strk:**										
1206	**104208446**	24.938	11/07/2014 19:34	REAR END, SLOW OR STOP	$ 5000	0	0	0	0	1	5	1	1	0	0	
Unit	**1 :** 32	**Alchl/Drgs:** 7	**Speed:** 50 MPH	**Dir:** N	**Veh Mnvr/Ped Actn:** 4	**Obj Strk:**										
Unit	**2 :** 1	**Alchl/Drgs:** 0	**Speed:** 50 MPH	**Dir:** N	**Veh Mnvr/Ped Actn:** 11	**Obj Strk:**										
1207	**104437521**	24.938	07/18/2015 13:38	REAR END, SLOW OR STOP	$ 1000	0	0	0	0	2	1	2	3	0	0	
Unit	**1 :** 1	**Alchl/Drgs:** 0	**Speed:** 55 MPH	**Dir:** E	**Veh Mnvr/Ped Actn:** 4	**Obj Strk:**										
Unit	**2 :** 1	**Alchl/Drgs:** 0	**Speed:** 55 MPH	**Dir:** E	**Veh Mnvr/Ped Actn:** 11	**Obj Strk:**										
1208	**104474328**	24.938	08/30/2015 22:56	FIXED OBJECT	$ 10000	0	0	0	0	2	5	3	5	0	0	
Unit	**1 :** 1	**Alchl/Drgs:** 0	**Speed:** 55 MPH	**Dir:** S	**Veh Mnvr/Ped Actn:** 5	**Obj Strk:** 44										
1209	**104599811**	24.938	12/24/2015 00:37	FIXED OBJECT	$ 12900	0	0	0	1	2	5	3	3	0	0	
Unit	**1 :** 1	**Alchl/Drgs:** 0	**Speed:** 60 MPH	**Dir:** E	**Veh Mnvr/Ped Actn:** 4	**Obj Strk:** 42										
1210	**104688872**	24.938	03/30/2016 09:33	REAR END, SLOW OR STOP	$ 6000	0	0	0	1	1	1	1	1	0	0	
Unit	**1 :** 1	**Alchl/Drgs:** 0	**Speed:** 60 MPH	**Dir:** E	**Veh Mnvr/Ped Actn:** 4	**Obj Strk:**										
Unit	**2 :** 1	**Alchl/Drgs:** 0	**Speed:** 60 MPH	**Dir:** E	**Veh Mnvr/Ped Actn:** 1	**Obj Strk:**										
Unit	**3 :** 4	**Alchl/Drgs:** 0	**Speed:** 60 MPH	**Dir:** E	**Veh Mnvr/Ped Actn:** 1	**Obj Strk:**										
Unit	**4 :** 4	**Alchl/Drgs:** 0	**Speed:** 60 MPH	**Dir:** E	**Veh Mnvr/Ped Actn:** 1	**Obj Strk:**										
1211	**104961368**	24.938	12/28/2016 17:58	REAR END, SLOW OR STOP	$ 7000	0	0	0	0	1	5	1	1	0	0	
Unit	**1 :** 1	**Alchl/Drgs:** 0	**Speed:** 55 MPH	**Dir:** W	**Veh Mnvr/Ped Actn:** 4	**Obj Strk:**										
Unit	**2 :** 5	**Alchl/Drgs:** 0	**Speed:** 55 MPH	**Dir:** W	**Veh Mnvr/Ped Actn:** 1	**Obj Strk:**										

All data presented in this report comes explicitly from the Traffic Engineering Accident Analysis System based upon va criteria provided by the report's creator. The onus is strictly upon the user of this report to exercise due diligence in in and further representing this data.

DocuSign Envelope ID: 5C03745C-4B01-4834-A65D-B77F558A4F46

North Carolina Department of Transportation
Traffic Engineering Accident Analysis System
Strip Analysis Report

Acc No	Crash ID	Milepost	Date	Accident Type	Total Damage	Injuries F	A	B	C	Condition R	L	W	Road Ch	Ci	Trfc Ctl Dv	Op
1212	**104961370**	24.938	12/28/2016 17:58	REAR END, SLOW OR STOP	$ 1300	0	0	0	0	1	5	1	1	0	0	
Unit	**1 :** 1	**Alchl/Drgs:** 0	**Speed:** 50 MPH	**Dir:** W	**Veh Mnvr/Ped Actn:** 4	**Obj Strk:**										
Unit	**2 :** 1	**Alchl/Drgs:** 0	**Speed:** 50 MPH	**Dir:** W	**Veh Mnvr/Ped Actn:** 1	**Obj Strk:**										
1213	**104962601**	24.938	12/28/2016 17:59	REAR END, SLOW OR STOP	$ 1600	0	0	0	0	1	5	1	1	0	0	
Unit	**1 :** 5	**Alchl/Drgs:** 0	**Speed:** 55 MPH	**Dir:** W	**Veh Mnvr/Ped Actn:** 4	**Obj Strk:**										
Unit	**2 :** 1	**Alchl/Drgs:** 0	**Speed:** 55 MPH	**Dir:** W	**Veh Mnvr/Ped Actn:** 1	**Obj Strk:**										
1214	**104993870**	24.938	01/31/2017 07:42	REAR END, SLOW OR STOP	$ 10600	0	0	0	0	1	1	1	1	0	0	
Unit	**1 :** 1	**Alchl/Drgs:** 0	**Speed:** 55 MPH	**Dir:** W	**Veh Mnvr/Ped Actn:** 4	**Obj Strk:**										
Unit	**2 :** 4	**Alchl/Drgs:** 0	**Speed:** 50 MPH	**Dir:** W	**Veh Mnvr/Ped Actn:** 11	**Obj Strk:**										
1215	**105245077**	24.938	10/05/2017 21:21	SIDESWIPE, SAME DIRECTION	$ 1600	0	0	0	0	1	5	1	3	0	0	
Unit	**1 :** 1	**Alchl/Drgs:** 0	**Speed:** 60 MPH	**Dir:** E	**Veh Mnvr/Ped Actn:** 4	**Obj Strk:**										
Unit	**2 :** 2	**Alchl/Drgs:** 0	**Speed:** 60 MPH	**Dir:** E	**Veh Mnvr/Ped Actn:** 5	**Obj Strk:**										
1216	**104038786**	24.955	04/21/2014 12:47	SIDESWIPE, SAME DIRECTION	$ 3800	0	0	0	0	1	1	1	5	0	0	
Unit	**1 :** 1	**Alchl/Drgs:** 0	**Speed:** 60 MPH	**Dir:** W	**Veh Mnvr/Ped Actn:** 4	**Obj Strk:**										
Unit	**2 :** 5	**Alchl/Drgs:** 0	**Speed:** 60 MPH	**Dir:** W	**Veh Mnvr/Ped Actn:** 4	**Obj Strk:**										
1217	**104432466**	24.955	07/13/2015 20:09	REAR END, SLOW OR STOP	$ 5600	0	0	0	0	1	2	2	1	4	10	1
Unit	**1 :** 2	**Alchl/Drgs:** 0	**Speed:** 0 MPH	**Dir:** SE	**Veh Mnvr/Ped Actn:** 1	**Obj Strk:**										
Unit	**2 :** 1	**Alchl/Drgs:** 0	**Speed:** 35 MPH	**Dir:** SE	**Veh Mnvr/Ped Actn:** 4	**Obj Strk:**										
1218	**104782292**	24.955	06/29/2016 16:29	REAR END, SLOW OR STOP	$ 5000	0	0	0	0	1	1	1	1	0	0	
Unit	**1 :** 4	**Alchl/Drgs:** 0	**Speed:** 45 MPH	**Dir:** W	**Veh Mnvr/Ped Actn:** 4	**Obj Strk:**										
Unit	**2 :** 1	**Alchl/Drgs:** 0	**Speed:** 45 MPH	**Dir:** W	**Veh Mnvr/Ped Actn:** 1	**Obj Strk:**										
1219	**104837528**	24.955	09/02/2016 14:19	REAR END, SLOW OR STOP	$ 1000	0	0	0	0	1	1	1	1	0	0	
Unit	**1 :** 32	**Alchl/Drgs:** 7	**Speed:** 60 MPH	**Dir:** E	**Veh Mnvr/Ped Actn:** 4	**Obj Strk:**										
Unit	**2 :** 1	**Alchl/Drgs:** 0	**Speed:** 45 MPH	**Dir:** E	**Veh Mnvr/Ped Actn:** 11	**Obj Strk:**										
1220	**104871185**	24.955	10/06/2016 18:19	MOVABLE OBJECT	$ 500	0	0	0	0	1	1	1	1	0	0	
Unit	**1 :** 4	**Alchl/Drgs:** 0	**Speed:** 60 MPH	**Dir:** E	**Veh Mnvr/Ped Actn:** 4	**Obj Strk:** 18										

DocuSign Envelope ID: 5C03745C-4B01-4834-A65D-B77F558A4F46

North Carolina Department of Transportation
Traffic Engineering Accident Analysis System
Strip Analysis Report

Acc No	Crash ID	Milepost	Date	Accident Type	Total Damage	Injuries F	A	B	C	Condition R	L	W	Road Ch	Ci	Trfc Ctl Dv	Op
1221	**104910015**	24.955	11/10/2016 16:15	MOVABLE OBJECT	$ 1000	0	0	0	0	1	1	1	1	0	0	
Unit	**1 :** 1	**Alchl/Drgs:** 0	**Speed:** 60 MPH	**Dir:** E	**Veh Mnvr/Ped Actn:** 4	**Obj Strk:** 18										
1222	**105252953**	24.955	10/12/2017 13:32	REAR END, SLOW OR STOP	$ 6000	0	0	0	0	1	1	1	1	0	0	
Unit	**1 :** 4	**Alchl/Drgs:** 0	**Speed:** 40 MPH	**Dir:** W	**Veh Mnvr/Ped Actn:** 4	**Obj Strk:**										
Unit	**2 :** 2	**Alchl/Drgs:** 0	**Speed:** 30 MPH	**Dir:** W	**Veh Mnvr/Ped Actn:** 11	**Obj Strk:**										
1223	**105450710**	24.955	04/17/2018 16:43	MOVABLE OBJECT	$ 100	0	0	0	0	1	1	1	7	0	0	
Unit	**1 :** 1	**Alchl/Drgs:** 0	**Speed:** 60 MPH	**Dir:** W	**Veh Mnvr/Ped Actn:** 4	**Obj Strk:** 18										
1224	**105721890**	24.955	12/24/2018 15:47	SIDESWIPE, SAME DIRECTION	$ 4000	0	0	0	0	1	1	1	1	0	0	
Unit	**1 :** 12	**Alchl/Drgs:** 0	**Speed:** 60 MPH	**Dir:** E	**Veh Mnvr/Ped Actn:** 4	**Obj Strk:**										
Unit	**2 :** 1	**Alchl/Drgs:** 0	**Speed:** 65 MPH	**Dir:** E	**Veh Mnvr/Ped Actn:** 5	**Obj Strk:** 59										
1225	**105685740**	24.957	11/21/2018 10:53	REAR END, SLOW OR STOP	$ 5900	0	0	0	0	1	1	1	1	0	0	
Unit	**1 :** 1	**Alchl/Drgs:** 0	**Speed:** 60 MPH	**Dir:** W	**Veh Mnvr/Ped Actn:** 4	**Obj Strk:**										
Unit	**2 :** 2	**Alchl/Drgs:** 0	**Speed:** 60 MPH	**Dir:** W	**Veh Mnvr/Ped Actn:** 1	**Obj Strk:**										
1226	**104942568**	24.959	12/09/2016 17:26	REAR END, SLOW OR STOP	$ 1500	0	0	0	0	1	1	1	1	0	0	
Unit	**1 :** 1	**Alchl/Drgs:** 0	**Speed:** 55 MPH	**Dir:** W	**Veh Mnvr/Ped Actn:** 4	**Obj Strk:**										
Unit	**2 :** 1	**Alchl/Drgs:** 0	**Speed:** 60 MPH	**Dir:** W	**Veh Mnvr/Ped Actn:** 11	**Obj Strk:**										
1227	**105492412**	24.959	05/26/2018 16:15	REAR END, SLOW OR STOP	$ 3100	0	0	0	0	2	1	3	1	0	0	
Unit	**1 :** 1	**Alchl/Drgs:** 0	**Speed:** 20 MPH	**Dir:** W	**Veh Mnvr/Ped Actn:** 4	**Obj Strk:**										
Unit	**2 :** 2	**Alchl/Drgs:** 0	**Speed:** 1 MPH	**Dir:** W	**Veh Mnvr/Ped Actn:** 4	**Obj Strk:**										
1228	**105492414**	24.959	05/26/2018 16:15	REAR END, SLOW OR STOP	$ 1100	0	0	0	0	2	1	3	1	0	0	
Unit	**1 :** 4	**Alchl/Drgs:** 0	**Speed:** 5 MPH	**Dir:** W	**Veh Mnvr/Ped Actn:** 4	**Obj Strk:**										
Unit	**2 :** 1	**Alchl/Drgs:** 0	**Speed:** 0 MPH	**Dir:** W	**Veh Mnvr/Ped Actn:** 4	**Obj Strk:**										
1229	**104672710**	24.988	03/11/2016 17:51	REAR END, SLOW OR STOP	$ 4000	0	0	0	0	1	1	1	7	0	0	
Unit	**1 :** 1	**Alchl/Drgs:** 0	**Speed:** 45 MPH	**Dir:** W	**Veh Mnvr/Ped Actn:** 4	**Obj Strk:**										
Unit	**2 :** 1	**Alchl/Drgs:** 0	**Speed:** 45 MPH	**Dir:** W	**Veh Mnvr/Ped Actn:** 1	**Obj Strk:**										
1230	**104082868**	25.038	06/14/2014 13:30	REAR END, SLOW OR STOP	$ 7500	0	0	0	0	1	1	1	1	0	0	
Unit	**1 :** 1	**Alchl/Drgs:** 0	**Speed:** 60 MPH	**Dir:** W	**Veh Mnvr/Ped Actn:** 4	**Obj Strk:**										

All data presented in this report comes explicitly from the Traffic Engineering Accident Analysis System based upon va criteria provided by the report's creator. The onus is strictly upon the user of this report to exercise due diligence in in and further representing this data.

DocuSign Envelope ID: 5C03745C-4B01-4834-A65D-B77F558A4F46

North Carolina Department of Transportation
Traffic Engineering Accident Analysis System
Strip Analysis Report

Acc No	Crash ID	Milepost	Date	Accident Type	Total Damage	Injuries F	A	B	C	Condition R	L	W	Road Ch	Ci	Trfc Ctl Dv	Op
Unit	**2 :** 4	**Alchl/Drgs:**	0	**Speed:** 20 MPH	**Dir:** W	**Veh Mnvr/Ped Actn:**				4			**Obj Strk:**			
1231	**104178184**	25.038	10/10/2014 07:17	REAR END, SLOW OR STOP	$ 510	0	0	0	1	1	1	1	1	0	0	
Unit	**1 :** 14	**Alchl/Drgs:**	0	**Speed:** 60 MPH	**Dir:** W	**Veh Mnvr/Ped Actn:**				4			**Obj Strk:**			
Unit	**2 :** 4	**Alchl/Drgs:**	0	**Speed:** 60 MPH	**Dir:** W	**Veh Mnvr/Ped Actn:**				4			**Obj Strk:**			
1232	**104205976**	25.038	11/06/2014 18:00	SIDESWIPE, SAME DIRECTION	$ 1000	0	0	0	0	1	5	1	1	0	0	
Unit	**1 :** 2	**Alchl/Drgs:**	7	**Speed:** 60 MPH	**Dir:** N	**Veh Mnvr/Ped Actn:**				5			**Obj Strk:**			
Unit	**2 :** 4	**Alchl/Drgs:**	0	**Speed:** 60 MPH	**Dir:** N	**Veh Mnvr/Ped Actn:**				4			**Obj Strk:**			
1233	**104256172**	25.038	12/30/2014 18:01	REAR END, SLOW OR STOP	$ 1700	0	0	0	0	1	5	1	1	0	0	
Unit	**1 :** 4	**Alchl/Drgs:**	0	**Speed:** 50 MPH	**Dir:** N	**Veh Mnvr/Ped Actn:**				4			**Obj Strk:**			
Unit	**2 :** 1	**Alchl/Drgs:**	0	**Speed:** 55 MPH	**Dir:** N	**Veh Mnvr/Ped Actn:**				1			**Obj Strk:**			
1234	**104258806**	25.038	12/30/2014 18:11	REAR END, SLOW OR STOP	$ 1700	0	0	0	0	1	5	1	1	0	0	
Unit	**1 :** 2	**Alchl/Drgs:**	0	**Speed:** 55 MPH	**Dir:** N	**Veh Mnvr/Ped Actn:**				4			**Obj Strk:**			
Unit	**2 :** 2	**Alchl/Drgs:**	0	**Speed:** 50 MPH	**Dir:** N	**Veh Mnvr/Ped Actn:**				1			**Obj Strk:**			
1235	**104277820**	25.038	01/23/2015 05:53	MOVABLE OBJECT	$ 1750	0	0	1	0	2	5	3	5	0	0	
Unit	**1 :** 14	**Alchl/Drgs:**	0	**Speed:** 60 MPH	**Dir:** W	**Veh Mnvr/Ped Actn:**				4			**Obj Strk:**			
Unit	**2 :** 1	**Alchl/Drgs:**	0	**Speed:** 60 MPH	**Dir:** W	**Veh Mnvr/Ped Actn:**				4			**Obj Strk:**		18	
1236	**104316254**	25.038	03/04/2015 07:49	REAR END, SLOW OR STOP	$ 1100	0	0	0	0	1	1	2	3	0	0	
Unit	**1 :** 2	**Alchl/Drgs:**	0	**Speed:** 50 MPH	**Dir:** W	**Veh Mnvr/Ped Actn:**				4			**Obj Strk:**			
Unit	**2 :** 2	**Alchl/Drgs:**	0	**Speed:** 50 MPH	**Dir:** W	**Veh Mnvr/Ped Actn:**				11			**Obj Strk:**			
1237	**104341905**	25.038	04/07/2015 15:58	REAR END, SLOW OR STOP	$ 1900	0	0	0	0	2	1	3	1	0	0	
Unit	**1 :** 4	**Alchl/Drgs:**	0	**Speed:** 30 MPH	**Dir:** S	**Veh Mnvr/Ped Actn:**				4			**Obj Strk:**			
Unit	**2 :** 1	**Alchl/Drgs:**	0	**Speed:** 30 MPH	**Dir:** S	**Veh Mnvr/Ped Actn:**				1			**Obj Strk:**			
1238	**104348997**	25.038	04/11/2015 12:46	REAR END, SLOW OR STOP	$ 2200	0	0	0	0	1	1	1	3	0	0	
Unit	**1 :** 1	**Alchl/Drgs:**	0	**Speed:** 40 MPH	**Dir:** W	**Veh Mnvr/Ped Actn:**				4			**Obj Strk:**			
Unit	**2 :** 1	**Alchl/Drgs:**	0	**Speed:** 40 MPH	**Dir:** W	**Veh Mnvr/Ped Actn:**				1			**Obj Strk:**			
1239	**104440826**	25.038	07/17/2015 22:41	FIXED OBJECT	$ 2000	0	0	0	0	1	5	1	1	0	0	
Unit	**1 :** 1	**Alchl/Drgs:**	0	**Speed:** 50 MPH	**Dir:** S	**Veh Mnvr/Ped Actn:**				4			**Obj Strk:**		42	

DocuSign Envelope ID: 5C03745C-4B01-4834-A65D-B77F558A4F46

North Carolina Department of Transportation
Traffic Engineering Accident Analysis System
Strip Analysis Report

Acc No	Crash ID	Milepost	Date	Accident Type	Total Damage	Injuries F	A	B	C	Condition R	L	W	Road Ch	Ci	Trfc Ctl Dv	Op
1240	**104457501**	25.038	08/10/2015 21:12	SIDESWIPE, SAME DIRECTION	$ 1500	0	0	0	0	2	5	3	7	0	0	
Unit	**1 :** 1	**Alchl/Drgs:** 0	**Speed:** 60 MPH	**Dir:** N	**Veh Mnvr/Ped Actn:** 4	**Obj Strk:**										
Unit	**2 :** 32	**Alchl/Drgs:** 7	**Speed:** 55 MPH	**Dir:** N	**Veh Mnvr/Ped Actn:** 5	**Obj Strk:**										
1241	**104557220**	25.038	11/06/2015 17:34	REAR END, SLOW OR STOP	$ 4000	0	0	0	0	1	2	1	3	0	0	
Unit	**1 :** 1	**Alchl/Drgs:** 0	**Speed:** 50 MPH	**Dir:** S	**Veh Mnvr/Ped Actn:** 4	**Obj Strk:**										
Unit	**2 :** 1	**Alchl/Drgs:** 0	**Speed:** 0 MPH	**Dir:** S	**Veh Mnvr/Ped Actn:** 1	**Obj Strk:**										
1242	**104583362**	25.038	12/09/2015 10:40	FIXED OBJECT	$ 4700	0	0	0	0	1	1	1	7	0	0	
Unit	**1 :** 1	**Alchl/Drgs:** 0	**Speed:** 60 MPH	**Dir:** E	**Veh Mnvr/Ped Actn:** 4	**Obj Strk:** 44										
1243	**104602513**	25.038	12/27/2015 20:50	SIDESWIPE, SAME DIRECTION	$ 11200	0	0	0	1	1	5	1	7	0	0	
Unit	**1 :** 14	**Alchl/Drgs:** 0	**Speed:** 60 MPH	**Dir:** W	**Veh Mnvr/Ped Actn:** 5	**Obj Strk:**										
Unit	**2 :** 1	**Alchl/Drgs:** 0	**Speed:** 60 MPH	**Dir:** W	**Veh Mnvr/Ped Actn:** 4	**Obj Strk:** 59										
1244	**104659455**	25.038	02/26/2016 15:42	REAR END, SLOW OR STOP	$ 2600	0	0	0	0	1	1	1	1	0	0	
Unit	**1 :** 4	**Alchl/Drgs:** 0	**Speed:** 60 MPH	**Dir:** N	**Veh Mnvr/Ped Actn:** 4	**Obj Strk:**										
Unit	**2 :** 4	**Alchl/Drgs:** 0	**Speed:** 60 MPH	**Dir:** N	**Veh Mnvr/Ped Actn:** 1	**Obj Strk:**										
1245	**104680911**	25.038	03/18/2016 14:58	REAR END, SLOW OR STOP	$ 4200	0	0	0	0	1	1	1	1	0	0	
Unit	**1 :** 14	**Alchl/Drgs:** 0	**Speed:** 45 MPH	**Dir:** W	**Veh Mnvr/Ped Actn:** 4	**Obj Strk:**										
Unit	**2 :** 10	**Alchl/Drgs:** 0	**Speed:** 10 MPH	**Dir:** W	**Veh Mnvr/Ped Actn:** 11	**Obj Strk:**										
1246	**104743398**	25.038	05/24/2016 17:41	REAR END, SLOW OR STOP	$ 16500	0	0	0	0	1	1	1	3	0	0	
Unit	**1 :** 2	**Alchl/Drgs:** 0	**Speed:** 40 MPH	**Dir:** E	**Veh Mnvr/Ped Actn:** 1	**Obj Strk:**										
Unit	**2 :** 1	**Alchl/Drgs:** 2	**Speed:** 40 MPH	**Dir:** E	**Veh Mnvr/Ped Actn:** 1	**Obj Strk:**										
Unit	**3 :** 2	**Alchl/Drgs:** 0	**Speed:** 50 MPH	**Dir:** E	**Veh Mnvr/Ped Actn:** 4	**Obj Strk:**										
1247	**104776695**	25.038	06/26/2016 14:24	REAR END, SLOW OR STOP	$ 1000	0	0	0	0	1	1	1	1	0	0	
Unit	**1 :** 1	**Alchl/Drgs:** 0	**Speed:** 35 MPH	**Dir:** S	**Veh Mnvr/Ped Actn:** 4	**Obj Strk:**										
Unit	**2 :** 1	**Alchl/Drgs:** 0	**Speed:** 25 MPH	**Dir:** S	**Veh Mnvr/Ped Actn:** 11	**Obj Strk:**										
1248	**104780079**	25.038	07/01/2016 17:01	REAR END, SLOW OR STOP	$ 18500	0	0	0	5	1	1	1	3	0	0	
Unit	**1 :** 4	**Alchl/Drgs:** 0	**Speed:** 55 MPH	**Dir:** E	**Veh Mnvr/Ped Actn:** 1	**Obj Strk:**										
Unit	**2 :** 4	**Alchl/Drgs:** 0	**Speed:** 55 MPH	**Dir:** E	**Veh Mnvr/Ped Actn:** 1	**Obj Strk:**										
Unit	**3 :** 5	**Alchl/Drgs:** 0	**Speed:** 55 MPH	**Dir:** E	**Veh Mnvr/Ped Actn:** 1	**Obj Strk:**										
Unit	**4 :** 1	**Alchl/Drgs:** 0	**Speed:** 55 MPH	**Dir:** E	**Veh Mnvr/Ped Actn:** 4	**Obj Strk:**										

DocuSign Envelope ID: 5C03745C-4B01-4834-A65D-B77F558A4F46

North Carolina Department of Transportation
Traffic Engineering Accident Analysis System
Strip Analysis Report

Acc No	Crash ID	Milepost	Date	Accident Type	Total Damage	Injuries F	A	B	C	Condition R	L	W	Road Ch	Ci	Trfc Ctl Dv	Op
1249	**104785753**	25.038	07/07/2016 14:10	REAR END, SLOW OR STOP	$ 1300	0	0	0	0	1	1	2	3	0	0	
Unit	**1 :** 1	**Alchl/Drgs:** 0	**Speed:** 60 MPH	**Dir:** W	**Veh Mnvr/Ped Actn:** 4	**Obj Strk:**										
Unit	**2 :** 2	**Alchl/Drgs:** 0	**Speed:** 60 MPH	**Dir:** W	**Veh Mnvr/Ped Actn:** 11	**Obj Strk:**										
1250	**104785884**	25.038	07/08/2016 13:39	REAR END, SLOW OR STOP	$ 900	0	0	0	0	1	1	1	3	0	0	
Unit	**1 :** 4	**Alchl/Drgs:** 0	**Speed:** 40 MPH	**Dir:** N	**Veh Mnvr/Ped Actn:** 4	**Obj Strk:**										
Unit	**2 :** 1	**Alchl/Drgs:** 0	**Speed:** 40 MPH	**Dir:** N	**Veh Mnvr/Ped Actn:** 4	**Obj Strk:**										
1251	**104836891**	25.038	09/02/2016 14:38	FIXED OBJECT	$ 3000	0	0	0	0	1	1	2	1	0	0	
Unit	**1 :** 1	**Alchl/Drgs:** 0	**Speed:** 50 MPH	**Dir:** E	**Veh Mnvr/Ped Actn:** 4	**Obj Strk:** 44										
1252	**104866518**	25.038	10/02/2016 14:29	REAR END, SLOW OR STOP	$ 1500	0	0	0	0	1	1	1	1	0	0	
Unit	**1 :** 4	**Alchl/Drgs:** 0	**Speed:** 50 MPH	**Dir:** N	**Veh Mnvr/Ped Actn:** 4	**Obj Strk:**										
Unit	**2 :** 2	**Alchl/Drgs:** 0	**Speed:** 45 MPH	**Dir:** N	**Veh Mnvr/Ped Actn:** 11	**Obj Strk:**										
1253	**104877156**	25.038	10/10/2016 14:45	REAR END, SLOW OR STOP	$ 1000	0	0	0	0	1	1	1	3	0	0	
Unit	**1 :** 1	**Alchl/Drgs:** 0	**Speed:** 50 MPH	**Dir:** S	**Veh Mnvr/Ped Actn:** 4	**Obj Strk:**										
Unit	**2 :** 1	**Alchl/Drgs:** 0	**Speed:** 45 MPH	**Dir:** S	**Veh Mnvr/Ped Actn:** 11	**Obj Strk:**										
1254	**104904281**	25.038	11/05/2016 13:04	REAR END, SLOW OR STOP	$ 1900	0	0	0	0	1	1	1	1	0	0	
Unit	**1 :** 1	**Alchl/Drgs:** 0	**Speed:** 60 MPH	**Dir:** N	**Veh Mnvr/Ped Actn:** 4	**Obj Strk:**										
Unit	**2 :** 4	**Alchl/Drgs:** 0	**Speed:** 60 MPH	**Dir:** N	**Veh Mnvr/Ped Actn:** 11	**Obj Strk:**										
1255	**104951546**	25.038	12/16/2016 16:27	REAR END, SLOW OR STOP	$ 1000	0	0	0	0	1	1	2	1	0	0	
Unit	**1 :** 1	**Alchl/Drgs:** 0	**Speed:** 45 MPH	**Dir:** S	**Veh Mnvr/Ped Actn:** 4	**Obj Strk:**										
Unit	**2 :** 4	**Alchl/Drgs:** 0	**Speed:** 25 MPH	**Dir:** S	**Veh Mnvr/Ped Actn:** 1	**Obj Strk:**										
1256	**104955751**	25.038	12/21/2016 17:51	REAR END, SLOW OR STOP	$ 9000	0	0	0	0	1	5	1	3	0	0	
Unit	**1 :** 4	**Alchl/Drgs:** 0	**Speed:** 40 MPH	**Dir:** W	**Veh Mnvr/Ped Actn:** 11	**Obj Strk:**										
Unit	**2 :** 1	**Alchl/Drgs:** 0	**Speed:** 40 MPH	**Dir:** W	**Veh Mnvr/Ped Actn:** 4	**Obj Strk:**										
1257	**105069137**	25.038	04/13/2017 18:06	REAR END, SLOW OR STOP	$ 2400	0	0	0	0	1	1	1	3	0	0	
Unit	**1 :** 4	**Alchl/Drgs:** 0	**Speed:** 45 MPH	**Dir:** N	**Veh Mnvr/Ped Actn:** 4	**Obj Strk:**										
Unit	**2 :** 2	**Alchl/Drgs:** 0	**Speed:** 30 MPH	**Dir:** N	**Veh Mnvr/Ped Actn:** 1	**Obj Strk:**										
Unit	**3 :** 1	**Alchl/Drgs:** 0	**Speed:** 30 MPH	**Dir:** N	**Veh Mnvr/Ped Actn:** 1	**Obj Strk:**										

All data presented in this report comes explicitly from the Traffic Engineering Accident Analysis System based upon va criteria provided by the report's creator. The onus is strictly upon the user of this report to exercise due diligence in in and further representing this data.

DocuSign Envelope ID: 5C03745C-4B01-4834-A65D-B77F558A4F46

North Carolina Department of Transportation
Traffic Engineering Accident Analysis System
Strip Analysis Report

Acc No	Crash ID	Milepost	Date	Accident Type	Total Damage	Injuries F	A	B	C	Condition R	L	W	Road Ch	Ci	Trfc Ctl Dv	Op
1258	**105090465**	25.038	05/03/2017 14:43	REAR END, SLOW OR STOP	$ 1500	0	0	0	0	1	1	1	1	0	0	
Unit	**1 :** 4	**Alchl/Drgs:** 0	**Speed:** 60 MPH	**Dir:** E	**Veh Mnvr/Ped Actn:** 4	**Obj Strk:**										
Unit	**2 :** 4	**Alchl/Drgs:** 0	**Speed:** 60 MPH	**Dir:** E	**Veh Mnvr/Ped Actn:** 11	**Obj Strk:**										
1259	**105114150**	25.038	05/29/2017 15:35	REAR END, SLOW OR STOP	$ 13500	0	0	0	0	1	1	2	3	0	0	
Unit	**1 :** 1	**Alchl/Drgs:** 0	**Speed:** 60 MPH	**Dir:** E	**Veh Mnvr/Ped Actn:** 4	**Obj Strk:**										
Unit	**2 :** 4	**Alchl/Drgs:** 0	**Speed:** 60 MPH	**Dir:** E	**Veh Mnvr/Ped Actn:** 1	**Obj Strk:**										
Unit	**3 :** 2	**Alchl/Drgs:** 0	**Speed:** 60 MPH	**Dir:** E	**Veh Mnvr/Ped Actn:** 1	**Obj Strk:**										
1260	**105148084**	25.038	06/30/2017 13:52	REAR END, SLOW OR STOP	$ 2800	0	0	0	0	1	1	2	1	0	0	
Unit	**1 :** 1	**Alchl/Drgs:** 0	**Speed:** 60 MPH	**Dir:** S	**Veh Mnvr/Ped Actn:** 4	**Obj Strk:**										
Unit	**2 :** 2	**Alchl/Drgs:** 0	**Speed:** 55 MPH	**Dir:** S	**Veh Mnvr/Ped Actn:** 11	**Obj Strk:**										
1261	**105150165**	25.038	07/03/2017 21:31	FIXED OBJECT	$ 1000	0	0	0	0	1	5	1	1	0	0	
Unit	**1 :** 1	**Alchl/Drgs:** 3	**Speed:** 55 MPH	**Dir:** S	**Veh Mnvr/Ped Actn:** 4	**Obj Strk:** 44										
1262	**105210865**	25.038	09/04/2017 16:31	REAR END, SLOW OR STOP	$ 11500	0	0	0	0	1	1	1	3	0	0	
Unit	**1 :** 2	**Alchl/Drgs:** 0	**Speed:** 45 MPH	**Dir:** E	**Veh Mnvr/Ped Actn:** 1	**Obj Strk:**										
Unit	**2 :** 1	**Alchl/Drgs:** 0	**Speed:** 45 MPH	**Dir:** E	**Veh Mnvr/Ped Actn:** 1	**Obj Strk:**										
Unit	**3 :** 1	**Alchl/Drgs:** 0	**Speed:** 45 MPH	**Dir:** E	**Veh Mnvr/Ped Actn:** 1	**Obj Strk:**										
Unit	**4 :** 1	**Alchl/Drgs:** 0	**Speed:** 45 MPH	**Dir:** E	**Veh Mnvr/Ped Actn:** 4	**Obj Strk:**										
1263	**105414487**	25.038	03/16/2018 12:19	REAR END, SLOW OR STOP	$ 2800	0	0	0	0	1	1	1	1	0	0	
Unit	**1 :** 4	**Alchl/Drgs:** 0	**Speed:** 60 MPH	**Dir:** N	**Veh Mnvr/Ped Actn:** 4	**Obj Strk:**										
Unit	**2 :** 2	**Alchl/Drgs:** 0	**Speed:** 60 MPH	**Dir:** N	**Veh Mnvr/Ped Actn:** 11	**Obj Strk:**										
1264	**105456061**	25.038	04/23/2018 07:46	REAR END, SLOW OR STOP	$ 3200	0	0	0	0	2	1	3	1	0	0	
Unit	**1 :** 1	**Alchl/Drgs:** 0	**Speed:** 50 MPH	**Dir:** N	**Veh Mnvr/Ped Actn:** 4	**Obj Strk:**										
Unit	**2 :** 2	**Alchl/Drgs:** 0	**Speed:** 50 MPH	**Dir:** N	**Veh Mnvr/Ped Actn:** 1	**Obj Strk:**										
1265	**105477184**	25.038	05/11/2018 13:53	REAR END, SLOW OR STOP	$ 5500	0	0	0	0	1	1	1	3	0	0	
Unit	**1 :** 2	**Alchl/Drgs:** 0	**Speed:** 30 MPH	**Dir:** W	**Veh Mnvr/Ped Actn:** 1	**Obj Strk:**										
Unit	**2 :** 1	**Alchl/Drgs:** 0	**Speed:** 30 MPH	**Dir:** W	**Veh Mnvr/Ped Actn:** 4	**Obj Strk:**										
1266	**105534434**	25.038	07/08/2018 15:29	SIDESWIPE, SAME DIRECTION	$ 13000	0	0	0	0	1	1	1	3	0	0	
Unit	**1 :** 1	**Alchl/Drgs:** 0	**Speed:** 50 MPH	**Dir:** E	**Veh Mnvr/Ped Actn:** 4	**Obj Strk:**										
Unit	**2 :** 1	**Alchl/Drgs:** 0	**Speed:** 50 MPH	**Dir:** E	**Veh Mnvr/Ped Actn:** 4	**Obj Strk:**										

DocuSign Envelope ID: 5C03745C-4B01-4834-A65D-B77F558A4F46

North Carolina Department of Transportation
Traffic Engineering Accident Analysis System
Strip Analysis Report

Acc No	Crash ID	Milepost	Date	Accident Type	Total Damage	Injuries F	A	B	C	Condition R	L	W	Road Ch	Ci	Trfc Ctl Dv	Op
1267	**105554617**	25.038	07/27/2018 10:48	REAR END, SLOW OR STOP	$ 1900	0	0	0	0	1	1	1	1	0	0	
Unit	**1 :** 1	**Alchl/Drgs:** 0	**Speed:** 55 MPH	**Dir:** N	**Veh Mnvr/Ped Actn:** 4	**Obj Strk:**										
Unit	**2 :** 2	**Alchl/Drgs:** 0	**Speed:** 55 MPH	**Dir:** N	**Veh Mnvr/Ped Actn:** 11	**Obj Strk:**										
1268	**105569951**	25.038	08/12/2018 12:30	REAR END, SLOW OR STOP	$ 3200	0	0	0	0	1	1	1	1	0	0	
Unit	**1 :** 12	**Alchl/Drgs:** 0	**Speed:** 50 MPH	**Dir:** S	**Veh Mnvr/Ped Actn:** 4	**Obj Strk:**										
Unit	**2 :** 4	**Alchl/Drgs:** 0	**Speed:** 50 MPH	**Dir:** S	**Veh Mnvr/Ped Actn:** 11	**Obj Strk:**										
1269	**105630412**	25.038	10/08/2018 16:16	REAR END, SLOW OR STOP	$ 2500	0	0	0	0	1	1	1	1	0	0	
Unit	**1 :** 1	**Alchl/Drgs:** 0	**Speed:** 20 MPH	**Dir:** W	**Veh Mnvr/Ped Actn:** 4	**Obj Strk:**										
Unit	**2 :** 1	**Alchl/Drgs:** 0	**Speed:** 0 MPH	**Dir:** W	**Veh Mnvr/Ped Actn:** 1	**Obj Strk:**										
1270	**105641609**	25.038	10/19/2018 08:11	REAR END, SLOW OR STOP	$ 12000	0	0	0	0	1	1	1	1	0	0	
Unit	**1 :** 4	**Alchl/Drgs:** 0	**Speed:** 40 MPH	**Dir:** N	**Veh Mnvr/Ped Actn:** 4	**Obj Strk:**										
Unit	**2 :** 3	**Alchl/Drgs:** 0	**Speed:** 30 MPH	**Dir:** N	**Veh Mnvr/Ped Actn:** 4	**Obj Strk:**										
Unit	**3 :** 4	**Alchl/Drgs:** 0	**Speed:** 30 MPH	**Dir:** N	**Veh Mnvr/Ped Actn:** 4	**Obj Strk:**										
1271	**105670608**	25.038	11/09/2018 17:16	REAR END, SLOW OR STOP	$ 3000	0	0	0	0	1	2	2	3	0	0	
Unit	**1 :** 2	**Alchl/Drgs:** 0	**Speed:** 0 MPH	**Dir:** W	**Veh Mnvr/Ped Actn:** 1	**Obj Strk:**										
Unit	**2 :** 1	**Alchl/Drgs:** 0	**Speed:** 40 MPH	**Dir:** W	**Veh Mnvr/Ped Actn:** 4	**Obj Strk:**										
1272	**105711046**	25.038	12/13/2018 17:38	REAR END, SLOW OR STOP	$ 2900	0	0	0	0	1	2	1	1	0	0	
Unit	**1 :** 1	**Alchl/Drgs:** 0	**Speed:** 50 MPH	**Dir:** N	**Veh Mnvr/Ped Actn:** 4	**Obj Strk:**										
Unit	**2 :** 4	**Alchl/Drgs:** 0	**Speed:** 50 MPH	**Dir:** N	**Veh Mnvr/Ped Actn:** 11	**Obj Strk:**										
Unit	**3 :** 1	**Alchl/Drgs:** 0	**Speed:** 50 MPH	**Dir:** N	**Veh Mnvr/Ped Actn:** 1	**Obj Strk:**										
1273	**105714615**	25.038	12/17/2018 09:34	SIDESWIPE, SAME DIRECTION	$ 2300	0	0	0	0	1	1	1	3	0	0	
Unit	**1 :** 1	**Alchl/Drgs:** 7	**Speed:** 70 MPH	**Dir:** N	**Veh Mnvr/Ped Actn:** 4	**Obj Strk:**										
Unit	**2 :** 4	**Alchl/Drgs:** 0	**Speed:** 60 MPH	**Dir:** N	**Veh Mnvr/Ped Actn:** 4	**Obj Strk:**										
1274	**104004079**	25.055	03/16/2014 05:20	FIXED OBJECT	$ 9000	0	0	0	0	1	1	2	1	0	0	
Unit	**1 :** 1	**Alchl/Drgs:** 1	**Speed:** 65 MPH	**Dir:** S	**Veh Mnvr/Ped Actn:** 4	**Obj Strk:** 44										
1275	**104367970**	25.055	04/09/2015 15:26	SIDESWIPE, SAME DIRECTION	$ 2500	0	0	0	0	1	1	1	3	0	0	
Unit	**1 :** 4	**Alchl/Drgs:** 0	**Speed:** 60 MPH	**Dir:** E	**Veh Mnvr/Ped Actn:** 5	**Obj Strk:**										
Unit	**2 :** 2	**Alchl/Drgs:** 0	**Speed:** 60 MPH	**Dir:** E	**Veh Mnvr/Ped Actn:** 4	**Obj Strk:**										

DocuSign Envelope ID: 5C03745C-4B01-4834-A65D-B77F558A4F46

North Carolina Department of Transportation
Traffic Engineering Accident Analysis System
Strip Analysis Report

Acc No	Crash ID	Milepost	Date	Accident Type	Total Damage	Injuries F	A	B	C	Condition R	L	W	Road Ch	Ci	Trfc Ctl Dv	Op
1276	**104538237**	25.055	10/26/2015 11:26	REAR END, SLOW OR STOP	$ 10000	0	0	0	1	2	1	2	1	0	0	
Unit	**1 :** 2	**Alchl/Drgs:**	0	**Speed:**	55 MPH	**Dir:**	E	**Veh Mnvr/Ped Actn:**		4		**Obj Strk:**				
Unit	**2 :** 1	**Alchl/Drgs:**	0	**Speed:**	50 MPH	**Dir:**	E	**Veh Mnvr/Ped Actn:**		11		**Obj Strk:**				
Unit	**3 :** 4	**Alchl/Drgs:**	0	**Speed:**	60 MPH	**Dir:**	E	**Veh Mnvr/Ped Actn:**		4		**Obj Strk:**				
1277	**104538238**	25.055	10/26/2015 11:36	REAR END, SLOW OR STOP	$ 8100	0	0	0	0	2	1	3	1	0	0	
Unit	**1 :** 4	**Alchl/Drgs:**	0	**Speed:**	40 MPH	**Dir:**	E	**Veh Mnvr/Ped Actn:**		4		**Obj Strk:**				
Unit	**2 :** 1	**Alchl/Drgs:**	0	**Speed:**	30 MPH	**Dir:**	E	**Veh Mnvr/Ped Actn:**		11		**Obj Strk:**				
1278	**104637467**	25.055	02/05/2016 16:58	REAR END, SLOW OR STOP	$ 5000	0	0	0	0	1	1	1	1	0	0	
Unit	**1 :** 1	**Alchl/Drgs:**	0	**Speed:**	35 MPH	**Dir:**	W	**Veh Mnvr/Ped Actn:**		4		**Obj Strk:**				
Unit	**2 :** 1	**Alchl/Drgs:**	0	**Speed:**	35 MPH	**Dir:**	W	**Veh Mnvr/Ped Actn:**		11		**Obj Strk:**				
1279	**105528863**	25.055	06/15/2018 11:33	MOVABLE OBJECT	$ 900	0	0	0	0	1	1	1	1	0	0	
Unit	**1 :** 12	**Alchl/Drgs:**	0	**Speed:**	60 MPH	**Dir:**	E	**Veh Mnvr/Ped Actn:**		4		**Obj Strk:**				
Unit	**2 :** 4	**Alchl/Drgs:**	0	**Speed:**	60 MPH	**Dir:**	E	**Veh Mnvr/Ped Actn:**		4		**Obj Strk:**			18	
1280	**105635581**	25.055	10/13/2018 14:40	REAR END, SLOW OR STOP	$ 1600	0	0	0	0	1	1	1	1	0	0	
Unit	**1 :** 4	**Alchl/Drgs:**	0	**Speed:**	35 MPH	**Dir:**	E	**Veh Mnvr/Ped Actn:**		4		**Obj Strk:**				
Unit	**2 :** 2	**Alchl/Drgs:**	0	**Speed:**	25 MPH	**Dir:**	E	**Veh Mnvr/Ped Actn:**		11		**Obj Strk:**				
1281	**105469915**	25.100	05/06/2018 12:49	REAR END, SLOW OR STOP	$ 4500	0	0	0	0	1	1	2	3	0	0	
Unit	**1 :** 1	**Alchl/Drgs:**	0	**Speed:**	60 MPH	**Dir:**	E	**Veh Mnvr/Ped Actn:**		11		**Obj Strk:**				
Unit	**2 :** 4	**Alchl/Drgs:**	0	**Speed:**	60 MPH	**Dir:**	E	**Veh Mnvr/Ped Actn:**		11		**Obj Strk:**				
1282	**105627378**	25.110	10/05/2018 07:43	FIXED OBJECT	$ 7000	0	0	1	0	1	1	1	3	0	0	
Unit	**1 :** 11	**Alchl/Drgs:**	0	**Speed:**	30 MPH	**Dir:**	W	**Veh Mnvr/Ped Actn:**		4		**Obj Strk:**			59	
1283	**104437433**	25.118	07/16/2015 19:35	REAR END, SLOW OR STOP	$ 2600	0	0	0	0	1	1	1	3	0	0	
Unit	**1 :** 1	**Alchl/Drgs:**	0	**Speed:**	35 MPH	**Dir:**	W	**Veh Mnvr/Ped Actn:**		11		**Obj Strk:**				
Unit	**2 :** 4	**Alchl/Drgs:**	0	**Speed:**	30 MPH	**Dir:**	W	**Veh Mnvr/Ped Actn:**		11		**Obj Strk:**				
1284	**104032717**	25.119	04/11/2014 17:20	REAR END, SLOW OR STOP	$ 6000	0	0	0	0	1	1	1	1	0	0	
Unit	**1 :** 4	**Alchl/Drgs:**	0	**Speed:**	60 MPH	**Dir:**	E	**Veh Mnvr/Ped Actn:**		4		**Obj Strk:**				
Unit	**2 :** 4	**Alchl/Drgs:**	0	**Speed:**	60 MPH	**Dir:**	E	**Veh Mnvr/Ped Actn:**		1		**Obj Strk:**				

DocuSign Envelope ID: 5C03745C-4B01-4834-A65D-B77F558A4F46

North Carolina Department of Transportation
Traffic Engineering Accident Analysis System
Strip Analysis Report

Acc No	Crash ID	Milepost	Date	Accident Type	Total Damage	Injuries F	A	B	C	Condition R	L	W	Road Ch	Ci	Trfc Ctl Dv	Op
1285	**104741025**	25.138	05/21/2016 14:43	REAR END, SLOW OR STOP	$ 2500	0	0	0	0	1	1	2	5	0	0	
Unit	**1 :** 1	**Alchl/Drgs:** 0	**Speed:** 60 MPH	**Dir:** W	**Veh Mnvr/Ped Actn:** 1	**Obj Strk:**										
Unit	**2 :** 2	**Alchl/Drgs:** 0	**Speed:** 60 MPH	**Dir:** W	**Veh Mnvr/Ped Actn:** 1	**Obj Strk:**										
Unit	**3 :** 1	**Alchl/Drgs:** 7	**Speed:** 60 MPH	**Dir:** W	**Veh Mnvr/Ped Actn:** 4	**Obj Strk:**										
1286	**104747463**	25.138	05/27/2016 14:09	REAR END, SLOW OR STOP	$ 7700	0	0	0	2	1	1	2	5	0	0	
Unit	**1 :** 1	**Alchl/Drgs:** 0	**Speed:** 45 MPH	**Dir:** S	**Veh Mnvr/Ped Actn:** 4	**Obj Strk:**										
Unit	**2 :** 4	**Alchl/Drgs:** 0	**Speed:** 45 MPH	**Dir:** S	**Veh Mnvr/Ped Actn:** 1	**Obj Strk:**										
Unit	**3 :** 4	**Alchl/Drgs:** 0	**Speed:** 45 MPH	**Dir:** S	**Veh Mnvr/Ped Actn:** 1	**Obj Strk:**										
1287	**105644506**	25.138	10/10/2018 20:45	SIDESWIPE, SAME DIRECTION	$ 300	0	0	0	0	1	2	1	1	0	0	2
Unit	**1 :** 1	**Alchl/Drgs:** 7	**Speed:** 55 MPH	**Dir:** W	**Veh Mnvr/Ped Actn:** 4	**Obj Strk:**										
Unit	**2 :** 1	**Alchl/Drgs:** 0	**Speed:** 55 MPH	**Dir:** W	**Veh Mnvr/Ped Actn:** 4	**Obj Strk:**										
1288	**104043506**	25.155	04/26/2014 11:34	REAR END, SLOW OR STOP	$ 1500	0	0	0	1	1	1	1	3	0	0	
Unit	**1 :** 4	**Alchl/Drgs:** 0	**Speed:** 60 MPH	**Dir:** W	**Veh Mnvr/Ped Actn:** 4	**Obj Strk:**										
Unit	**2 :** 5	**Alchl/Drgs:** 0	**Speed:** 45 MPH	**Dir:** W	**Veh Mnvr/Ped Actn:** 1	**Obj Strk:**										
1289	**104566931**	25.155	11/27/2015 09:09	ANIMAL	$ 2500	0	0	0	0	1	1	1	3	0	0	
Unit	**1 :** 1	**Alchl/Drgs:** 0	**Speed:** 60 MPH	**Dir:** N	**Veh Mnvr/Ped Actn:** 4	**Obj Strk:** 17										
1290	**104904063**	25.155	11/03/2016 18:01	REAR END, SLOW OR STOP	$ 3000	0	0	0	0	1	1	1	1	0	0	
Unit	**1 :** 1	**Alchl/Drgs:** 7	**Speed:** 60 MPH	**Dir:** W	**Veh Mnvr/Ped Actn:** 4	**Obj Strk:**										
Unit	**2 :** 1	**Alchl/Drgs:** 0	**Speed:** 30 MPH	**Dir:** W	**Veh Mnvr/Ped Actn:** 11	**Obj Strk:**										
1291	**105464291**	25.155	04/29/2018 14:11	REAR END, SLOW OR STOP	$ 3500	0	0	0	0	1	1	1	3	0	0	
Unit	**1 :** 1	**Alchl/Drgs:** 0	**Speed:** 40 MPH	**Dir:** W	**Veh Mnvr/Ped Actn:** 4	**Obj Strk:**										
Unit	**2 :** 4	**Alchl/Drgs:** 0	**Speed:** 0 MPH	**Dir:** W	**Veh Mnvr/Ped Actn:** 11	**Obj Strk:**										
1292	**105498107**	25.155	06/01/2018 15:44	REAR END, SLOW OR STOP	$ 3500	0	0	0	0	1	1	1	3	0	0	
Unit	**1 :** 1	**Alchl/Drgs:** 0	**Speed:** 40 MPH	**Dir:** W	**Veh Mnvr/Ped Actn:** 4	**Obj Strk:**										
Unit	**2 :** 2	**Alchl/Drgs:** 0	**Speed:** 40 MPH	**Dir:** W	**Veh Mnvr/Ped Actn:** 11	**Obj Strk:**										
1293	**105600942**	25.155	09/11/2018 13:49	REAR END, SLOW OR STOP	$ 2000	0	0	0	1	2	1	3	1	0	0	
Unit	**1 :** 1	**Alchl/Drgs:** 0	**Speed:** 35 MPH	**Dir:** W	**Veh Mnvr/Ped Actn:** 4	**Obj Strk:**										
Unit	**2 :** 1	**Alchl/Drgs:** 0	**Speed:** 20 MPH	**Dir:** W	**Veh Mnvr/Ped Actn:** 11	**Obj Strk:**										

All data presented in this report comes explicitly from the Traffic Engineering Accident Analysis System based upon va criteria provided by the report's creator. The onus is strictly upon the user of this report to exercise due diligence in in and further representing this data.

DocuSign Envelope ID: 5C03745C-4B01-4834-A65D-B77F558A4F46

North Carolina Department of Transportation
Traffic Engineering Accident Analysis System
Strip Analysis Report

Acc No	Crash ID	Milepost	Date	Accident Type	Total Damage	Injuries F	A	B	C	Condition R	L	W	Road Ch	Ci	Trfc Ctl Dv	Op
1294	**104646903**	25.176	02/15/2016 21:52	FIXED OBJECT	$ 1400	0	0	0	0	4	4	6	7	0	0	
Unit	**1 :** 4	**Alchl/Drgs:** 0	**Speed:** 60 MPH	**Dir:** E	**Veh Mnvr/Ped Actn:** 4	**Obj Strk:** 44										
1295	**104890555**	25.185	10/21/2016 13:45	FIXED OBJECT	$ 2500	0	0	0	0	2	1	2	7	0	0	
Unit	**1 :** 1	**Alchl/Drgs:** 0	**Speed:** 40 MPH	**Dir:** E	**Veh Mnvr/Ped Actn:** 4	**Obj Strk:** 64										
1296	**104351028**	25.195	04/14/2015 19:11	SIDESWIPE, SAME DIRECTION	$ 5900	0	0	0	0	1	1	1	5	0	0	
Unit	**1 :** 1	**Alchl/Drgs:** 0	**Speed:** 60 MPH	**Dir:** N	**Veh Mnvr/Ped Actn:** 4	**Obj Strk:**										
Unit	**2 :** 1	**Alchl/Drgs:** 0	**Speed:** 60 MPH	**Dir:** N	**Veh Mnvr/Ped Actn:** 4	**Obj Strk:** 44										
1297	**103972509**	25.238	02/09/2014 15:27	SIDESWIPE, SAME DIRECTION	$ 2200	0	0	0	0	1	1	1	1	0	0	
Unit	**1 :** 12	**Alchl/Drgs:** 0	**Speed:** 55 MPH	**Dir:** E	**Veh Mnvr/Ped Actn:** 5	**Obj Strk:**										
Unit	**2 :** 4	**Alchl/Drgs:** 0	**Speed:** 60 MPH	**Dir:** E	**Veh Mnvr/Ped Actn:** 4	**Obj Strk:**										
1298	**104086815**	25.238	06/21/2014 14:30	REAR END, SLOW OR STOP	$ 6500	0	0	0	1	1	1	1	1	0	0	
Unit	**1 :** 10	**Alchl/Drgs:** 0	**Speed:** 45 MPH	**Dir:** W	**Veh Mnvr/Ped Actn:** 4	**Obj Strk:**										
Unit	**2 :** 1	**Alchl/Drgs:** 0	**Speed:** 45 MPH	**Dir:** W	**Veh Mnvr/Ped Actn:** 11	**Obj Strk:**										
1299	**104192003**	25.238	10/24/2014 17:20	REAR END, SLOW OR STOP	$ 2000	0	0	0	1	1	1	1	1	0	0	
Unit	**1 :** 1	**Alchl/Drgs:** 0	**Speed:** 60 MPH	**Dir:** W	**Veh Mnvr/Ped Actn:** 4	**Obj Strk:**										
Unit	**2 :** 1	**Alchl/Drgs:** 0	**Speed:** 60 MPH	**Dir:** W	**Veh Mnvr/Ped Actn:** 1	**Obj Strk:**										
1300	**104208436**	25.238	11/07/2014 13:32	REAR END, SLOW OR STOP	$ 30000	0	0	0	1	1	1	1	1	0	0	
Unit	**1 :** 1	**Alchl/Drgs:** 0	**Speed:** 60 MPH	**Dir:** W	**Veh Mnvr/Ped Actn:** 4	**Obj Strk:**										
Unit	**2 :** 4	**Alchl/Drgs:** 0	**Speed:** 60 MPH	**Dir:** W	**Veh Mnvr/Ped Actn:** 11	**Obj Strk:**										
1301	**104437524**	25.238	07/18/2015 10:52	REAR END, SLOW OR STOP	$ 4050	0	0	0	0	1	1	1	4	0	0	
Unit	**1 :** 1	**Alchl/Drgs:** 0	**Speed:** 20 MPH	**Dir:** W	**Veh Mnvr/Ped Actn:** 4	**Obj Strk:**										
Unit	**2 :** 5	**Alchl/Drgs:** 0	**Speed:** 20 MPH	**Dir:** W	**Veh Mnvr/Ped Actn:** 1	**Obj Strk:**										
Unit	**3 :** 1	**Alchl/Drgs:** 0	**Speed:** 20 MPH	**Dir:** W	**Veh Mnvr/Ped Actn:** 1	**Obj Strk:**										
Unit	**4 :** 4	**Alchl/Drgs:** 0	**Speed:** 20 MPH	**Dir:** W	**Veh Mnvr/Ped Actn:** 1	**Obj Strk:**										
1302	**104437522**	25.238	07/18/2015 12:33	SIDESWIPE, SAME DIRECTION	$ 5000	0	0	0	0	1	1	2	3	0	0	
Unit	**1 :** 1	**Alchl/Drgs:** 0	**Speed:** 50 MPH	**Dir:** E	**Veh Mnvr/Ped Actn:** 4	**Obj Strk:**										
Unit	**2 :** 1	**Alchl/Drgs:** 0	**Speed:** 55 MPH	**Dir:** E	**Veh Mnvr/Ped Actn:** 4	**Obj Strk:**										

All data presented in this report comes explicitly from the Traffic Engineering Accident Analysis System based upon va criteria provided by the report's creator. The onus is strictly upon the user of this report to exercise due diligence in in and further representing this data.

DocuSign Envelope ID: 5C03745C-4B01-4834-A65D-B77F558A4F46

North Carolina Department of Transportation
Traffic Engineering Accident Analysis System
Strip Analysis Report

Acc No	Crash ID	Milepost	Date	Accident Type	Total Damage	Injuries F	A	B	C	Condition R	L	W	Road Ch	Ci	Trfc Ctl Dv	Op
1303	**104599693**	25.238	12/19/2015 18:55	FIXED OBJECT	$ 14800	0	0	0	0	1	5	1	1	0	0	
Unit	**1 :** 4	**Alchl/Drgs:** 0	**Speed:** 60 MPH	**Dir:** W	**Veh Mnvr/Ped Actn:** 4	**Obj Strk:** 42										
1304	**104653767**	25.238	02/19/2016 16:03	REAR END, SLOW OR STOP	$ 4500	0	0	0	0	1	1	1	1	0	0	
Unit	**1 :** 1	**Alchl/Drgs:** 0	**Speed:** 45 MPH	**Dir:** N	**Veh Mnvr/Ped Actn:** 4	**Obj Strk:**										
Unit	**2 :** 1	**Alchl/Drgs:** 0	**Speed:** 0 MPH	**Dir:** N	**Veh Mnvr/Ped Actn:** 1	**Obj Strk:**										
Unit	**3 :** 1	**Alchl/Drgs:** 0	**Speed:** 0 MPH	**Dir:** N	**Veh Mnvr/Ped Actn:** 1	**Obj Strk:**										
1305	**104789877**	25.238	07/10/2016 15:06	REAR END, SLOW OR STOP	$ 4500	0	0	0	0	1	1	1	3	0	0	
Unit	**1 :** 4	**Alchl/Drgs:** 0	**Speed:** 60 MPH	**Dir:** W	**Veh Mnvr/Ped Actn:** 11	**Obj Strk:**										
Unit	**2 :** 1	**Alchl/Drgs:** 0	**Speed:** 60 MPH	**Dir:** W	**Veh Mnvr/Ped Actn:** 11	**Obj Strk:**										
1306	**104817464**	25.238	08/11/2016 19:40	ANIMAL	$ 1500	0	0	0	0	1	1	1	1	0	0	
Unit	**1 :** 1	**Alchl/Drgs:** 0	**Speed:** 60 MPH	**Dir:** E	**Veh Mnvr/Ped Actn:** 4	**Obj Strk:** 17										
1307	**104862496**	25.238	09/28/2016 13:59	FIXED OBJECT	$ 5000	0	0	0	0	1	1	1	1	0	0	
Unit	**1 :** 12	**Alchl/Drgs:** 0	**Speed:** 60 MPH	**Dir:** W	**Veh Mnvr/Ped Actn:** 4	**Obj Strk:**										
Unit	**2 :** 1	**Alchl/Drgs:** 0	**Speed:** 60 MPH	**Dir:** W	**Veh Mnvr/Ped Actn:** 4	**Obj Strk:** 44										
1308	**105502245**	25.238	06/05/2018 17:21	REAR END, SLOW OR STOP	$ 6100	0	0	0	0	1	1	1	3	0	0	
Unit	**1 :** 1	**Alchl/Drgs:** 0	**Speed:** 40 MPH	**Dir:** W	**Veh Mnvr/Ped Actn:** 1	**Obj Strk:**										
Unit	**2 :** 4	**Alchl/Drgs:** 0	**Speed:** 40 MPH	**Dir:** W	**Veh Mnvr/Ped Actn:** 1	**Obj Strk:**										
Unit	**3 :** 4	**Alchl/Drgs:** 0	**Speed:** 40 MPH	**Dir:** W	**Veh Mnvr/Ped Actn:** 4	**Obj Strk:**										
1309	**105534054**	25.238	07/06/2018 13:27	REAR END, SLOW OR STOP	$ 1800	0	0	0	1	1	1	2	1	0	0	
Unit	**1 :** 20	**Alchl/Drgs:** 0	**Speed:** 20 MPH	**Dir:** S	**Veh Mnvr/Ped Actn:** 4	**Obj Strk:**										
Unit	**2 :** 1	**Alchl/Drgs:** 0	**Speed:** 15 MPH	**Dir:** S	**Veh Mnvr/Ped Actn:** 11	**Obj Strk:**										
1310	**105706155**	25.238	12/11/2018 09:22	MOVABLE OBJECT	$ 350	0	0	0	0	1	1	1	1	0	0	
Unit	**1 :** 1	**Alchl/Drgs:** 0	**Speed:** 55 MPH	**Dir:** W	**Veh Mnvr/Ped Actn:** 6	**Obj Strk:** 18										
1311	**105723963**	25.238	12/26/2018 16:59	REAR END, SLOW OR STOP	$ 650	0	0	0	2	1	1	1	1	0	0	
Unit	**1 :** 1	**Alchl/Drgs:** 0	**Speed:** 40 MPH	**Dir:** W	**Veh Mnvr/Ped Actn:** 4	**Obj Strk:**										
Unit	**2 :** 3	**Alchl/Drgs:** 0	**Speed:** 40 MPH	**Dir:** W	**Veh Mnvr/Ped Actn:** 11	**Obj Strk:**										

DocuSign Envelope ID: 5C03745C-4B01-4834-A65D-B77F558A4F46

North Carolina Department of Transportation
Traffic Engineering Accident Analysis System
Strip Analysis Report

Acc No	Crash ID	Milepost	Date	Accident Type	Total Damage	Injuries F	A	B	C	Condition R	L	W	Road Ch	Ci	Trfc Ctl Dv	Op
1312	**104098455**	25.255	06/27/2014 16:24	SIDESWIPE, SAME DIRECTION	$ 3000	0	0	0	0	2	1	2	1	0	0	
Unit	**1 :** 2	**Alchl/Drgs:** 0	**Speed:** 20 MPH	**Dir:** S	**Veh Mnvr/Ped Actn:** 4	**Obj Strk:**										
Unit	**2 :** 2	**Alchl/Drgs:** 0	**Speed:** 15 MPH	**Dir:** S	**Veh Mnvr/Ped Actn:** 4	**Obj Strk:**										
1313	**104208462**	25.255	11/07/2014 19:28	REAR END, SLOW OR STOP	$ 5000	0	0	0	0	1	5	1	1	0	0	
Unit	**1 :** 1	**Alchl/Drgs:** 0	**Speed:** 55 MPH	**Dir:** N	**Veh Mnvr/Ped Actn:** 4	**Obj Strk:**										
Unit	**2 :** 1	**Alchl/Drgs:** 0	**Speed:** 55 MPH	**Dir:** N	**Veh Mnvr/Ped Actn:** 11	**Obj Strk:**										
1314	**104442442**	25.255	07/24/2015 14:44	REAR END, SLOW OR STOP	$ 55000	0	0	0	0	1	1	1	3	0	0	
Unit	**1 :** 25	**Alchl/Drgs:** 0	**Speed:** 50 MPH	**Dir:** N	**Veh Mnvr/Ped Actn:** 4	**Obj Strk:**										
Unit	**2 :** 2	**Alchl/Drgs:** 0	**Speed:** 50 MPH	**Dir:** N	**Veh Mnvr/Ped Actn:** 11	**Obj Strk:**										
1315	**104462780**	25.255	08/14/2015 13:35	REAR END, SLOW OR STOP	$ 8100	0	0	0	0	1	1	2	2	0	0	
Unit	**1 :** 4	**Alchl/Drgs:** 0	**Speed:** 60 MPH	**Dir:** W	**Veh Mnvr/Ped Actn:** 4	**Obj Strk:**										
Unit	**2 :** 1	**Alchl/Drgs:** 0	**Speed:** 50 MPH	**Dir:** W	**Veh Mnvr/Ped Actn:** 11	**Obj Strk:**										
Unit	**3 :** 1	**Alchl/Drgs:** 0	**Speed:** 50 MPH	**Dir:** W	**Veh Mnvr/Ped Actn:** 11	**Obj Strk:**										
1316	**104528562**	25.255	10/23/2015 13:27	REAR END, SLOW OR STOP	$ 5000	0	0	0	0	1	1	1	1	0	0	
Unit	**1 :** 11	**Alchl/Drgs:** 0	**Speed:** 60 MPH	**Dir:** N	**Veh Mnvr/Ped Actn:** 4	**Obj Strk:**										
Unit	**2 :** 14	**Alchl/Drgs:** 0	**Speed:** 55 MPH	**Dir:** N	**Veh Mnvr/Ped Actn:** 11	**Obj Strk:**										
Unit	**3 :** 1	**Alchl/Drgs:** 0	**Speed:** 55 MPH	**Dir:** N	**Veh Mnvr/Ped Actn:** 1	**Obj Strk:**										
1317	**104532344**	25.255	10/23/2015 13:28	REAR END, SLOW OR STOP	$ 2300	0	0	0	0	1	1	1	1	0	0	
Unit	**1 :** 4	**Alchl/Drgs:** 0	**Speed:** 55 MPH	**Dir:** N	**Veh Mnvr/Ped Actn:** 4	**Obj Strk:**										
Unit	**2 :** 1	**Alchl/Drgs:** 0	**Speed:** 60 MPH	**Dir:** N	**Veh Mnvr/Ped Actn:** 1	**Obj Strk:**										
1318	**104999385**	25.255	02/02/2017 19:42	REAR END, SLOW OR STOP	$ 2500	0	0	0	0	1	5	1	1	0	0	
Unit	**1 :** 4	**Alchl/Drgs:** 0	**Speed:** 60 MPH	**Dir:** E	**Veh Mnvr/Ped Actn:** 5	**Obj Strk:**										
Unit	**2 :** 1	**Alchl/Drgs:** 7	**Speed:** 60 MPH	**Dir:** E	**Veh Mnvr/Ped Actn:** 11	**Obj Strk:**										
1319	**105042170**	25.255	03/17/2017 16:40	REAR END, SLOW OR STOP	$ 0	0	0	0	0	1	1	1	1	0	0	
Unit	**1 :** 1	**Alchl/Drgs:** 0	**Speed:** 10 MPH	**Dir:** NW	**Veh Mnvr/Ped Actn:** 11	**Obj Strk:**										
Unit	**2 :** 1	**Alchl/Drgs:** 0	**Speed:** 10 MPH	**Dir:** W	**Veh Mnvr/Ped Actn:** 1	**Obj Strk:**										
1320	**105439570**	25.255	04/06/2018 16:30	REAR END, SLOW OR STOP	$ 2900	0	0	0	0	2	1	2	1	0	0	
Unit	**1 :** 1	**Alchl/Drgs:** 0	**Speed:** 60 MPH	**Dir:** S	**Veh Mnvr/Ped Actn:** 4	**Obj Strk:**										
Unit	**2 :** 1	**Alchl/Drgs:** 0	**Speed:** 60 MPH	**Dir:** S	**Veh Mnvr/Ped Actn:** 11	**Obj Strk:**										

DocuSign Envelope ID: 5C03745C-4B01-4834-A65D-B77F558A4F46

North Carolina Department of Transportation
Traffic Engineering Accident Analysis System
Strip Analysis Report

Acc No	Crash ID	Milepost	Date	Accident Type	Total Damage	Injuries F	A	B	C	Condition R	L	W	Road Ch	Ci	Trfc Ctl Dv	Op
1321	**105534075**	25.255	07/06/2018 15:26	REAR END, SLOW OR STOP	$ 1900	0	0	0	1	1	1	2	1	0	0	
Unit	**1 :** 1	**Alchl/Drgs:** 0	**Speed:** 45 MPH	**Dir:** N	**Veh Mnvr/Ped Actn:** 4	**Obj Strk:**										
Unit	**2 :** 4	**Alchl/Drgs:** 0	**Speed:** 45 MPH	**Dir:** N	**Veh Mnvr/Ped Actn:** 1	**Obj Strk:**										
1322	**105585794**	25.255	08/27/2018 20:20	REAR END, SLOW OR STOP	$ 2000	0	0	0	0	1	5	1	1	0	0	
Unit	**1 :** 1	**Alchl/Drgs:** 0	**Speed:** 25 MPH	**Dir:** E	**Veh Mnvr/Ped Actn:** 4	**Obj Strk:**										
Unit	**2 :** 1	**Alchl/Drgs:** 0	**Speed:** 20 MPH	**Dir:** E	**Veh Mnvr/Ped Actn:** 11	**Obj Strk:**										
1323	**104705721**	25.259	04/13/2016 17:32	REAR END, SLOW OR STOP	$ 800	0	0	0	0	1	1	2	1	0	0	
Unit	**1 :** 4	**Alchl/Drgs:** 0	**Speed:** 50 MPH	**Dir:** N	**Veh Mnvr/Ped Actn:** 11	**Obj Strk:**										
Unit	**2 :** 2	**Alchl/Drgs:** 0	**Speed:** 50 MPH	**Dir:** N	**Veh Mnvr/Ped Actn:** 4	**Obj Strk:**										
1324	**104718581**	25.259	04/29/2016 16:50	REAR END, SLOW OR STOP	$ 6000	0	0	0	0	1	1	1	1	0	0	
Unit	**1 :** 1	**Alchl/Drgs:** 0	**Speed:** 60 MPH	**Dir:** W	**Veh Mnvr/Ped Actn:** 4	**Obj Strk:**										
Unit	**2 :** 4	**Alchl/Drgs:** 0	**Speed:** 60 MPH	**Dir:** W	**Veh Mnvr/Ped Actn:** 11	**Obj Strk:**										
1325	**105227720**	25.259	09/21/2017 07:49	REAR END, SLOW OR STOP	$ 1800	0	0	0	0	1	1	1	1	0	0	
Unit	**1 :** 32	**Alchl/Drgs:** 7	**Speed:** 30 MPH	**Dir:** N	**Veh Mnvr/Ped Actn:** 4	**Obj Strk:**										
Unit	**2 :** 4	**Alchl/Drgs:** 0	**Speed:** 20 MPH	**Dir:** N	**Veh Mnvr/Ped Actn:** 11	**Obj Strk:**										
Unit	**3 :** 4	**Alchl/Drgs:** 0	**Speed:** 0 MPH	**Dir:** N	**Veh Mnvr/Ped Actn:** 1	**Obj Strk:**										
1326	**105337907**	25.259	12/31/2017 21:07	REAR END, SLOW OR STOP	$ 2000	0	0	0	0	4	5	2	1	1	0	
Unit	**1 :** 1	**Alchl/Drgs:** 0	**Speed:** 10 MPH	**Dir:** W	**Veh Mnvr/Ped Actn:** 1	**Obj Strk:**										
Unit	**2 :** 4	**Alchl/Drgs:** 0	**Speed:** 15 MPH	**Dir:** W	**Veh Mnvr/Ped Actn:** 4	**Obj Strk:**										
1327	**105510623**	25.259	06/13/2018 17:37	REAR END, SLOW OR STOP	$ 3000	0	0	0	0	2	1	3	1	0	0	
Unit	**1 :** 1	**Alchl/Drgs:** 0	**Speed:** 35 MPH	**Dir:** W	**Veh Mnvr/Ped Actn:** 4	**Obj Strk:**										
Unit	**2 :** 1	**Alchl/Drgs:** 0	**Speed:** 0 MPH	**Dir:** W	**Veh Mnvr/Ped Actn:** 1	**Obj Strk:**										
1328	**105265348**	25.309	10/23/2017 12:42	REAR END, SLOW OR STOP	$ 3500	0	0	0	0	2	1	2	1	0	0	
Unit	**1 :** 14	**Alchl/Drgs:** 0	**Speed:** 30 MPH	**Dir:** W	**Veh Mnvr/Ped Actn:** 4	**Obj Strk:**										
Unit	**2 :** 2	**Alchl/Drgs:** 0	**Speed:** 30 MPH	**Dir:** W	**Veh Mnvr/Ped Actn:** 11	**Obj Strk:**										
1329	**104331937**	25.310	03/25/2015 17:36	REAR END, SLOW OR STOP	$ 2750	0	0	0	2	1	1	2	3	0	0	
Unit	**1 :** 1	**Alchl/Drgs:** 0	**Speed:** 45 MPH	**Dir:** E	**Veh Mnvr/Ped Actn:** 11	**Obj Strk:**										
Unit	**2 :** 1	**Alchl/Drgs:** 0	**Speed:** 0 MPH	**Dir:** E	**Veh Mnvr/Ped Actn:** 1	**Obj Strk:**										

All data presented in this report comes explicitly from the Traffic Engineering Accident Analysis System based upon va criteria provided by the report's creator. The onus is strictly upon the user of this report to exercise due diligence in in and further representing this data.

DocuSign Envelope ID: 5C03745C-4B01-4834-A65D-B77F558A4F46

North Carolina Department of Transportation
Traffic Engineering Accident Analysis System
Strip Analysis Report

Acc No	Crash ID	Milepost	Date	Accident Type	Total Damage	Injuries F	A	B	C	Condition R	L	W	Road Ch	Ci	Trfc Ctl Dv	Op
Unit	**3 :** 1	**Alchl/Drgs:**	0	**Speed:** 0 MPH	**Dir:** E	**Veh Mnvr/Ped Actn:**				1			**Obj Strk:**			
1330	**104374399**	25.310	05/03/2015 06:12	REAR END, SLOW OR STOP	$ 4000	0	0	1	0	1	3	1	1	0	0	
Unit	**1 :** 32	**Alchl/Drgs:**	7	**Speed:** 60 MPH	**Dir:** E	**Veh Mnvr/Ped Actn:**				4			**Obj Strk:**			
Unit	**2 :** 1	**Alchl/Drgs:**	0	**Speed:** 45 MPH	**Dir:** E	**Veh Mnvr/Ped Actn:**				5			**Obj Strk:**		42	
1331	**104789876**	25.338	07/10/2016 14:42	REAR END, SLOW OR STOP	$ 1600	0	0	0	0	1	1	1	3	0	0	
Unit	**1 :** 1	**Alchl/Drgs:**	0	**Speed:** 40 MPH	**Dir:** E	**Veh Mnvr/Ped Actn:**				11			**Obj Strk:**			
Unit	**2 :** 1	**Alchl/Drgs:**	0	**Speed:** 40 MPH	**Dir:** E	**Veh Mnvr/Ped Actn:**				1			**Obj Strk:**			
1332	**104852925**	25.338	09/15/2016 16:41	REAR END, SLOW OR STOP	$ 11700	0	0	1	1	1	1	1	1	0	0	
Unit	**1 :** 4	**Alchl/Drgs:**	0	**Speed:** 50 MPH	**Dir:** W	**Veh Mnvr/Ped Actn:**				4			**Obj Strk:**			
Unit	**2 :** 4	**Alchl/Drgs:**	0	**Speed:** 0 MPH	**Dir:** W	**Veh Mnvr/Ped Actn:**				1			**Obj Strk:**			
Unit	**3 :** 1	**Alchl/Drgs:**	0	**Speed:** 0 MPH	**Dir:** W	**Veh Mnvr/Ped Actn:**				1			**Obj Strk:**			
Unit	**4 :** 4	**Alchl/Drgs:**	0	**Speed:** 0 MPH	**Dir:** W	**Veh Mnvr/Ped Actn:**				1			**Obj Strk:**			
1333	**104920030**	25.338	11/18/2016 15:49	REAR END, SLOW OR STOP	$ 500	0	0	0	0	1	1	1	3	0	0	
Unit	**1 :** 32	**Alchl/Drgs:**	7	**Speed:** 15 MPH	**Dir:** W	**Veh Mnvr/Ped Actn:**				11			**Obj Strk:**			
Unit	**2 :** 4	**Alchl/Drgs:**	0	**Speed:** 15 MPH	**Dir:** W	**Veh Mnvr/Ped Actn:**				1			**Obj Strk:**			
1334	**104954250**	25.338	12/19/2016 17:33	REAR END, SLOW OR STOP	$ 6000	0	0	0	0	1	2	1	1	0	0	
Unit	**1 :** 1	**Alchl/Drgs:**	0	**Speed:** 50 MPH	**Dir:** N	**Veh Mnvr/Ped Actn:**				4			**Obj Strk:**			
Unit	**2 :** 10	**Alchl/Drgs:**	0	**Speed:** 25 MPH	**Dir:** N	**Veh Mnvr/Ped Actn:**				4			**Obj Strk:**			
1335	**105256269**	25.338	10/17/2017 09:12	ANIMAL	$ 1500	0	0	0	0	1	1	1	1	0	0	
Unit	**1 :** 1	**Alchl/Drgs:**	0	**Speed:** 45 MPH	**Dir:** W	**Veh Mnvr/Ped Actn:**				4			**Obj Strk:**		17	
1336	**105420849**	25.338	03/21/2018 00:36	FIXED OBJECT	$ 5000	0	0	0	0	2	5	3	1	0	0	
Unit	**1 :** 1	**Alchl/Drgs:**	0	**Speed:** 55 MPH	**Dir:** E	**Veh Mnvr/Ped Actn:**				5			**Obj Strk:**		44	
1337	**105610085**	25.338	09/20/2018 08:52	REAR END, SLOW OR STOP	$ 5000	0	0	0	0	1	1	1	1	0	0	
Unit	**1 :** 4	**Alchl/Drgs:**	0	**Speed:** 60 MPH	**Dir:** W	**Veh Mnvr/Ped Actn:**				4			**Obj Strk:**			
Unit	**2 :** 4	**Alchl/Drgs:**	0	**Speed:** 60 MPH	**Dir:** W	**Veh Mnvr/Ped Actn:**				11			**Obj Strk:**			
1338	**104235159**	25.359	12/05/2014 12:16	REAR END, SLOW OR STOP	$ 7000	0	0	1	0	1	1	2	7	0	0	
Unit	**1 :** 4	**Alchl/Drgs:**	0	**Speed:** 55 MPH	**Dir:** W	**Veh Mnvr/Ped Actn:**				4			**Obj Strk:**			
Unit	**2 :** 1	**Alchl/Drgs:**	0	**Speed:** 55 MPH	**Dir:** W	**Veh Mnvr/Ped Actn:**				4			**Obj Strk:**			

DocuSign Envelope ID: 5C03745C-4B01-4834-A65D-B77F558A4F46

North Carolina Department of Transportation
Traffic Engineering Accident Analysis System
Strip Analysis Report

Acc No	Crash ID	Milepost	Date	Accident Type	Total Damage	Injuries F	A	B	C	Condition R	L	W	Road Ch	Ci	Trfc Ctl Dv	Op
1339	**104925664**	25.359	11/23/2016 18:50	REAR END, SLOW OR STOP	$ 4500	0	0	0	0	1	5	1	1	0	0	
Unit	**1 :** 2	**Alchl/Drgs:** 0	**Speed:** 55 MPH	**Dir:** E	**Veh Mnvr/Ped Actn:** 4	**Obj Strk:**										
Unit	**2 :** 2	**Alchl/Drgs:** 0	**Speed:** 55 MPH	**Dir:** E	**Veh Mnvr/Ped Actn:** 11	**Obj Strk:**										
1340	**105159255**	25.359	07/12/2017 17:03	REAR END, SLOW OR STOP	$ 6100	0	0	0	0	1	1	1	1	0	0	
Unit	**1 :** 4	**Alchl/Drgs:** 0	**Speed:** 35 MPH	**Dir:** W	**Veh Mnvr/Ped Actn:** 4	**Obj Strk:**										
Unit	**2 :** 1	**Alchl/Drgs:** 0	**Speed:** 35 MPH	**Dir:** W	**Veh Mnvr/Ped Actn:** 1	**Obj Strk:**										
Unit	**3 :** 1	**Alchl/Drgs:** 0	**Speed:** 35 MPH	**Dir:** W	**Veh Mnvr/Ped Actn:** 1	**Obj Strk:**										
1341	**105724070**	25.359	12/27/2018 13:20	REAR END, SLOW OR STOP	$ 15000	0	0	0	0	1	1	2	1	0	0	
Unit	**1 :** 1	**Alchl/Drgs:** 0	**Speed:** 60 MPH	**Dir:** W	**Veh Mnvr/Ped Actn:** 4	**Obj Strk:**										
Unit	**2 :** 4	**Alchl/Drgs:** 0	**Speed:** 60 MPH	**Dir:** W	**Veh Mnvr/Ped Actn:** 1	**Obj Strk:**										
Unit	**3 :** 4	**Alchl/Drgs:** 0	**Speed:** 60 MPH	**Dir:** W	**Veh Mnvr/Ped Actn:** 1	**Obj Strk:**										
1342	**104424222**	25.388	07/03/2015 13:45	REAR END, SLOW OR STOP	$ 800	0	0	0	0	1	1	2	1	0	0	
Unit	**1 :** 4	**Alchl/Drgs:** 0	**Speed:** 20 MPH	**Dir:** N	**Veh Mnvr/Ped Actn:** 1	**Obj Strk:**										
Unit	**2 :** 1	**Alchl/Drgs:** 0	**Speed:** 20 MPH	**Dir:** N	**Veh Mnvr/Ped Actn:** 4	**Obj Strk:**										
1343	**105622790**	25.388	09/27/2018 15:35	SIDESWIPE, SAME DIRECTION	$ 12000	0	0	0	0	1	1	2	7	0	0	
Unit	**1 :** 14	**Alchl/Drgs:** 0	**Speed:** 45 MPH	**Dir:** W	**Veh Mnvr/Ped Actn:** 4	**Obj Strk:**										
Unit	**2 :** 2	**Alchl/Drgs:** 0	**Speed:** 45 MPH	**Dir:** W	**Veh Mnvr/Ped Actn:** 5	**Obj Strk:**										
Unit	**3 :** 1	**Alchl/Drgs:** 0	**Speed:** 45 MPH	**Dir:** W	**Veh Mnvr/Ped Actn:** 11	**Obj Strk:**										
Unit	**4 :** 1	**Alchl/Drgs:** 0	**Speed:** 45 MPH	**Dir:** W	**Veh Mnvr/Ped Actn:** 11	**Obj Strk:**										
1344	**104053677**	25.438	05/05/2014 17:54	REAR END, SLOW OR STOP	$ 3000	0	0	0	0	1	1	1	1	0	0	
Unit	**1 :** 5	**Alchl/Drgs:** 0	**Speed:** 15 MPH	**Dir:** W	**Veh Mnvr/Ped Actn:** 4	**Obj Strk:**										
Unit	**2 :** 1	**Alchl/Drgs:** 0	**Speed:** 10 MPH	**Dir:** W	**Veh Mnvr/Ped Actn:** 11	**Obj Strk:**										
1345	**104437528**	25.438	07/19/2015 16:34	MOVABLE OBJECT	$ 1500	0	0	0	0	1	1	1	3	0	0	
Unit	**1 :** 1	**Alchl/Drgs:** 0	**Speed:** 60 MPH	**Dir:** W	**Veh Mnvr/Ped Actn:** 4	**Obj Strk:** 18										
Unit	**2 :** 1	**Alchl/Drgs:** 0	**Speed:** 60 MPH	**Dir:** W	**Veh Mnvr/Ped Actn:** 4	**Obj Strk:** 18										
1346	**104437527**	25.438	07/19/2015 17:31	FIXED OBJECT	$ 3500	0	0	0	0	1	1	1	3	0	0	
Unit	**1 :** 5	**Alchl/Drgs:** 0	**Speed:** 60 MPH	**Dir:** W	**Veh Mnvr/Ped Actn:** 4	**Obj Strk:** 58										

DocuSign Envelope ID: 5C03745C-4B01-4834-A65D-B77F558A4F46

North Carolina Department of Transportation
Traffic Engineering Accident Analysis System
Strip Analysis Report

Acc No	Crash ID	Milepost	Date	Accident Type	Total Damage	Injuries F	A	B	C	Condition R	L	W	Road Ch	Ci	Trfc Ctl Dv	Op
1347	**104504489**	25.438	09/29/2015 11:55	FIXED OBJECT	$ 4400	0	0	0	0	2	1	3	5	0	0	
Unit	**1 :** 1	**Alchl/Drgs:** 0	**Speed:** 60 MPH	**Dir:** E	**Veh Mnvr/Ped Actn:** 4	**Obj Strk:** 42										
1348	**104817601**	25.438	08/12/2016 13:08	REAR END, SLOW OR STOP	$ 12000	0	0	0	1	1	1	1	1	0	0	
Unit	**1 :** 5	**Alchl/Drgs:** 0	**Speed:** 60 MPH	**Dir:** W	**Veh Mnvr/Ped Actn:** 4	**Obj Strk:**										
Unit	**2 :** 1	**Alchl/Drgs:** 0	**Speed:** 60 MPH	**Dir:** W	**Veh Mnvr/Ped Actn:** 1	**Obj Strk:**										
1349	**105182837**	25.438	07/28/2017 13:52	REAR END, SLOW OR STOP	$ 7700	0	0	0	0	2	1	1	1	0	0	
Unit	**1 :** 2	**Alchl/Drgs:** 0	**Speed:** 60 MPH	**Dir:** E	**Veh Mnvr/Ped Actn:** 4	**Obj Strk:**										
Unit	**2 :** 4	**Alchl/Drgs:** 0	**Speed:** 20 MPH	**Dir:** E	**Veh Mnvr/Ped Actn:** 1	**Obj Strk:**										
1350	**104695850**	25.440	04/05/2016 15:22	SIDESWIPE, SAME DIRECTION	$ 1100	0	0	0	0	1	1	1	1	0	0	
Unit	**1 :** 14	**Alchl/Drgs:** 0	**Speed:** 55 MPH	**Dir:** N	**Veh Mnvr/Ped Actn:** 4	**Obj Strk:**										
Unit	**2 :** 1	**Alchl/Drgs:** 0	**Speed:** 55 MPH	**Dir:** N	**Veh Mnvr/Ped Actn:** 5	**Obj Strk:**										
1351	**104817471**	25.440	08/11/2016 15:54	REAR END, SLOW OR STOP	$ 15500	0	0	1	0	1	1	1	3	0	0	
Unit	**1 :** 5	**Alchl/Drgs:** 0	**Speed:** 60 MPH	**Dir:** W	**Veh Mnvr/Ped Actn:** 4	**Obj Strk:**										
Unit	**2 :** 4	**Alchl/Drgs:** 0	**Speed:** 60 MPH	**Dir:** W	**Veh Mnvr/Ped Actn:** 11	**Obj Strk:**										
Unit	**3 :** 4	**Alchl/Drgs:** 0	**Speed:** 60 MPH	**Dir:** W	**Veh Mnvr/Ped Actn:** 11	**Obj Strk:**										
1352	**104896167**	25.440	10/24/2016 08:34	REAR END, SLOW OR STOP	$ 2800	0	0	0	1	1	1	1	6	0	0	
Unit	**1 :** 3	**Alchl/Drgs:** 0	**Speed:** 50 MPH	**Dir:** W	**Veh Mnvr/Ped Actn:** 4	**Obj Strk:**										
Unit	**2 :** 1	**Alchl/Drgs:** 0	**Speed:** 50 MPH	**Dir:** W	**Veh Mnvr/Ped Actn:** 11	**Obj Strk:**										
1353	**105168499**	25.440	07/21/2017 19:13	REAR END, SLOW OR STOP	$ 3200	0	0	0	0	1	1	1	3	0	0	
Unit	**1 :** 1	**Alchl/Drgs:** 0	**Speed:** 35 MPH	**Dir:** W	**Veh Mnvr/Ped Actn:** 11	**Obj Strk:**										
Unit	**2 :** 4	**Alchl/Drgs:** 0	**Speed:** 10 MPH	**Dir:** W	**Veh Mnvr/Ped Actn:** 11	**Obj Strk:**										
1354	**105268933**	25.440	10/23/2017 12:41	FIXED OBJECT	$ 11000	0	0	0	2	2	1	2	1	0	0	
Unit	**1 :** 1	**Alchl/Drgs:** 0	**Speed:** 45 MPH	**Dir:** N	**Veh Mnvr/Ped Actn:** 4	**Obj Strk:** 44										
Unit	**2 :** 1	**Alchl/Drgs:** 0	**Speed:** 45 MPH	**Dir:** N	**Veh Mnvr/Ped Actn:** 4	**Obj Strk:**										
1355	**105616275**	25.440	09/26/2018 10:23	REAR END, SLOW OR STOP	$ 5000	0	0	0	0	1	1	1	3	0	0	
Unit	**1 :** 1	**Alchl/Drgs:** 0	**Speed:** 50 MPH	**Dir:** N	**Veh Mnvr/Ped Actn:** 4	**Obj Strk:**										
Unit	**2 :** 4	**Alchl/Drgs:** 0	**Speed:** 25 MPH	**Dir:** N	**Veh Mnvr/Ped Actn:** 4	**Obj Strk:**										

DocuSign Envelope ID: 5C03745C-4B01-4834-A65D-B77F558A4F46

North Carolina Department of Transportation
Traffic Engineering Accident Analysis System
Strip Analysis Report

Acc No	Crash ID	Milepost	Date	Accident Type	Total Damage	Injuries F	A	B	C	Condition R	L	W	Road Ch	Ci	Trfc Ctl Dv	Op
1356	**104852411**	25.459	09/09/2016 17:59	REAR END, SLOW OR STOP	$ 25000	0	0	1	0	1	1	1	1	0	0	
Unit	**1 :** 1	**Alchl/Drgs:** 0	**Speed:** 45 MPH	**Dir:** W	**Veh Mnvr/Ped Actn:** 4	**Obj Strk:**										
Unit	**2 :** 1	**Alchl/Drgs:** 0	**Speed:** 40 MPH	**Dir:** W	**Veh Mnvr/Ped Actn:** 11	**Obj Strk:**										
Unit	**3 :** 1	**Alchl/Drgs:** 0	**Speed:** 40 MPH	**Dir:** W	**Veh Mnvr/Ped Actn:** 11	**Obj Strk:**										
Unit	**4 :** 4	**Alchl/Drgs:** 0	**Speed:** 40 MPH	**Dir:** W	**Veh Mnvr/Ped Actn:** 1	**Obj Strk:**										
1357	**104873447**	25.459	10/07/2016 14:53	REAR END, SLOW OR STOP	$ 1800	0	0	0	0	2	1	3	1	0	0	
Unit	**1 :** 2	**Alchl/Drgs:** 0	**Speed:** 60 MPH	**Dir:** W	**Veh Mnvr/Ped Actn:** 4	**Obj Strk:**										
Unit	**2 :** 4	**Alchl/Drgs:** 0	**Speed:** 60 MPH	**Dir:** W	**Veh Mnvr/Ped Actn:** 11	**Obj Strk:**										
1358	**104079298**	25.465	06/11/2014 06:05	FIXED OBJECT	$ 4500	0	0	0	0	1	3	1	1	0	0	
Unit	**1 :** 1	**Alchl/Drgs:** 0	**Speed:** 55 MPH	**Dir:** E	**Veh Mnvr/Ped Actn:** 5	**Obj Strk:** 42										
1359	**104199636**	25.509	10/31/2014 08:09	REAR END, SLOW OR STOP	$ 3000	0	0	0	0	1	1	1	1	0	0	
Unit	**1 :** 3	**Alchl/Drgs:** 0	**Speed:** 60 MPH	**Dir:** W	**Veh Mnvr/Ped Actn:** 4	**Obj Strk:**										
Unit	**2 :** 4	**Alchl/Drgs:** 0	**Speed:** 55 MPH	**Dir:** W	**Veh Mnvr/Ped Actn:** 1	**Obj Strk:**										

Legend for Report Details:

Acc No - Accident Number
Injuries: F - Fatal, A - Class A, B - Class B, C - Class C
Condition: R - Road Surface, L - Ambient Light, W - Weather
Rd Ch - Road Character
Rd Ci - Roadway Contributing Circumstances
Trfc Ctl - Traffic Control: Dv - Device, Op - Operating
Alchl/Drgs - Alcohol Drugs Suspected
Veh Mnvr/Ped Actn - Vehicle Maneuver/Pedestrian Action
Obj Strk - Object Struck

All data presented in this report comes explicitly from the Traffic Engineering Accident Analysis System based upon va criteria provided by the report's creator. The onus is strictly upon the user of this report to exercise due diligence in in and further representing this data.

DocuSign Envelope ID: 5C03745C-4B01-4834-A65D-B77F558A4F46

Summary Statistics

High Level Crash Summary

Crash Type	Number of Crashes	Percent of Total
Total Crashes	1359	100.00
Fatal Crashes	6	0.44
Non-Fatal Injury Crashes	288	21.19
Total Injury Crashes	294	21.63
Property Damage Only Crashes	1065	78.37
Night Crashes	261	19.21
Wet Crashes	214	15.75
Alcohol/Drugs Involvement Crashes	23	1.69

Crash Severity Summary

Crash Type	Number of Crashes	Percent of Total
Total Crashes	1359	100.00
Fatal Crashes	6	0.44
Class A Crashes	1	0.07
Class B Crashes	59	4.34
Class C Crashes	228	16.78
Property Damage Only Crashes	1065	78.37

Vehicle Exposure Statistics

Annual ADT = 79600

Total Length = 5.827 (Miles) **9.378 (Kilometers)**

Total Vehicle Exposure = 846.95 (MVMT) **1363.04 (MVKMT)**

Crash Rate	Crashes Per 100 Million Vehicle Miles	Crashes Per 100 Million Vehicle Kilometers
Total Crash Rate	160.46	99.70
Fatal Crash Rate	0.71	0.44
Non Fatal Crash Rate	34.00	21.13
Night Crash Rate	30.82	19.15
Wet Crash Rate	25.27	15.70
EPDO Rate	473.86	294.45

All data presented in this report comes explicitly from the Traffic Engineering Accident Analysis System based upon va
criteria provided by the report's creator. The onus is strictly upon the user of this report to exercise due diligence in in
and further representing this data.

DocuSign Envelope ID: 5C03745C-4B01-4834-A65D-B77F558A4F46

Miscellaneous Statistics

Severity Index =	2.95
EPDO Crash Index =	4013.40
Estimated Property Damage Total = $	7252833.00

Accident Type Summary

Accident Type	Number of Crashes	Percent of Total
ANGLE	7	0.52
ANIMAL	24	1.77
BACKING UP	3	0.22
FIXED OBJECT	116	8.54
JACKKNIFE	2	0.15
MOVABLE OBJECT	31	2.28
OTHER COLLISION WITH VEHICLE	17	1.25
OTHER NON-COLLISION	7	0.52
OVERTURN/ROLLOVER	18	1.32
PARKED MOTOR VEHICLE	2	0.15
PEDESTRIAN	1	0.07
RAN OFF ROAD - LEFT	12	0.88
RAN OFF ROAD - RIGHT	11	0.81
RAN OFF ROAD - STRAIGHT	1	0.07
REAR END, SLOW OR STOP	932	68.58
REAR END, TURN	1	0.07
SIDESWIPE, OPPOSITE DIRECTION	3	0.22
SIDESWIPE, SAME DIRECTION	171	12.58

Injury Summary

Injury Type	Number of Injuries	Percent of Total
Fatal Injuries	6	1.34
Class A Injuries	2	0.45
Class B Injuries	75	16.74
Class C Injuries	365	81.47
Total Non-Fatal Injuries	442	98.66
Total Injuries	448	100.00

All data presented in this report comes explicitly from the Traffic Engineering Accident Analysis System based upon va
criteria provided by the report's creator. The onus is strictly upon the user of this report to exercise due diligence in in
and further representing this data.

DocuSign Envelope ID: 5C03745C-4B01-4834-A65D-B77F558A4F46

North Carolina Department of Transportation
Traffic Engineering Accident Analysis System
Strip Analysis Report

Monthly Summary

Month	Number of Crashes	Percent of Total
Jan	55	4.05
Feb	72	5.30
Mar	90	6.62
Apr	102	7.51
May	124	9.12
Jun	106	7.80
Jul	145	10.67
Aug	80	5.89
Sep	101	7.43
Oct	167	12.29
Nov	172	12.66
Dec	145	10.67

Daily Summary

Day	Number of Crashes	Percent of Total
Mon	179	13.17
Tue	153	11.26
Wed	186	13.69
Thu	222	16.34
Fri	334	24.58
Sat	146	10.74
Sun	139	10.23

All data presented in this report comes explicitly from the Traffic Engineering Accident Analysis System based upon va
criteria provided by the report's creator. The onus is strictly upon the user of this report to exercise due diligence in in
and further representing this data.

DocuSign Envelope ID: 5C03745C-4B01-4834-A65D-B77F558A4F46

Hourly Summary

Hour	Number of Crashes	Percent of Total
0000-0059	12	0.88
0100-0159	10	0.74
0200-0259	7	0.52
0300-0359	6	0.44
0400-0459	10	0.74
0500-0559	16	1.18
0600-0659	16	1.18
0700-0759	90	6.62
0800-0859	85	6.25
0900-0959	41	3.02
1000-1059	40	2.94
1100-1159	56	4.12
1200-1259	78	5.74
1300-1359	92	6.77
1400-1459	117	8.61
1500-1559	118	8.68
1600-1659	140	10.30
1700-1759	182	13.39
1800-1859	104	7.65
1900-1959	44	3.24
2000-2059	37	2.72
2100-2159	21	1.55
2200-2259	26	1.91
2300-2359	11	0.81

All data presented in this report comes explicitly from the Traffic Engineering Accident Analysis System based upon va
criteria provided by the report's creator. The onus is strictly upon the user of this report to exercise due diligence in in
and further representing this data.

DocuSign Envelope ID: 5C03745C-4B01-4834-A65D-B77F558A4F46

Light and Road Conditions Summary

Condition	Dry	Wet	Other	Total
Day	903	149	4	1056
Dark	194	62	5	261
Other	38	3	1	42
Total	1135	214	10	1359

Object Struck Summary

Object Type	Times Struck	Percent of Total
ANIMAL	24	7.87
BRIDGE RAIL FACE	11	3.61
CONTRUCTION BARRIER	3	0.98
DITCH	7	2.30
EMBANKMENT	26	8.52
GUARDRAIL END IN MEDIAN	2	0.66
GUARDRAIL END ON SHOULDER	6	1.97
GUARDRAIL FACE IN MEDIAN	98	32.13
GUARDRAIL FACE ON SHOULDER	40	13.11
MEDIAN BARRIER FACE	11	3.61
MOVABLE OBJECT	42	13.77
OFFICIAL HIGHWAY SIGN BREAKAWAY	1	0.33
OTHER FIXED OBJECT	3	0.98
PARKED MOTOR VEHICLE	10	3.28
PEDESTRIAN	5	1.64
SHOULDER BARRIER END	1	0.33
SHOULDER BARRIER FACE	12	3.93
TREE	3	0.98

Vehicle Type Summary

Vehicle Type	Number Involved	Percent of Total
COMMERCIAL BUS	2	0.07
EMS VEHICLE, AMBULANCE, RESCUE SQUAD	1	0.04
LIGHT TRUCK (MINI-VAN, PANEL)	26	0.92
MOTOR HOME/RECREATIONAL VEHICLE	6	0.21
MOTORCYCLE	20	0.71
PASSENGER CAR	1322	46.86
PEDESTRIAN	3	0.11
PICKUP	387	13.72

All data presented in this report comes explicitly from the Traffic Engineering Accident Analysis System based upon va
criteria provided by the report's creator. The onus is strictly upon the user of this report to exercise due diligence in in
and further representing this data.

DocuSign Envelope ID: 5C03745C-4B01-4834-A65D-B77F558A4F46

North Carolina Department of Transportation
Traffic Engineering Accident Analysis System
Strip Analysis Report

Vehicle Type	Number Involved	Percent of Total
POLICE	3	0.11
SCHOOL BUS	1	0.04
SINGLE UNIT TRUCK (2-AXLE, 6-TIRE)	39	1.38
SINGLE UNIT TRUCK (3 OR MORE AXLES)	19	0.67
SPORT UTILITY	698	24.74
TRACTOR/DOULBES	3	0.11
TRACTOR/SEMI-TRAILER	89	3.15
TRUCK/TRACTOR	3	0.11
TRUCK/TRAILER	39	1.38
UNKNOWN	45	1.60
UNKNOWN HEAVY TRUCK	4	0.14
VAN	111	3.93

All data presented in this report comes explicitly from the Traffic Engineering Accident Analysis System based upon va criteria provided by the report's creator. The onus is strictly upon the user of this report to exercise due diligence in in and further representing this data.

DocuSign Envelope ID: 5C03745C-4B01-4834-A65D-B77F558A4F46

Yearly Totals Summary

Accident Totals

Year	Total Accidents	Fatal Accidents	Injury Accidents	Property Damage Only Accidents
2014	169	0	45	124
2015	292	3	61	228
2016	277	1	64	212
2017	295	2	50	243
2018	326	0	68	258
Total	1359	6	288	1065

Injury Totals

Year	Fatal Injuries	Class A, B, or C Injuries
2014	0	61
2015	3	103
2016	1	97
2017	2	72
2018	0	109
Total	6	442

Miscellaneous Totals

Year	Property Damage	EPDO Index
2014	$ 879195	502.00
2015	$ 1548995	970.80
2016	$ 1461995	826.40
2017	$ 1617172	885.00
2018	$ 1745476	829.20
Total	$ 7252833	4013.40

Type of Accident Totals

Year	Left Turn	Right Turn	Rear End	Run Off Road & Fixed Object	Angle	Side Swipe	Other
2014	0	0	105	30	3	23	8
2015	0	0	187	34	3	44	24
2016	0	0	202	25	1	22	27
2017	0	0	206	27	0	40	22
2018	0	0	233	24	0	45	24

All data presented in this report comes explicitly from the Traffic Engineering Accident Analysis System based upon va
criteria provided by the report's creator. The onus is strictly upon the user of this report to exercise due diligence in in
and further representing this data.

DocuSign Envelope ID: 5C03745C-4B01-4834-A65D-B77F558A4F46

North Carolina Department of Transportation
Traffic Engineering Accident Analysis System
Strip Analysis Report

Year	Left Turn	Right Turn	Rear End	Run Off Road & Fixed Object	Angle	Side Swipe	Other
Total	0	0	933	140	7	174	105

All data presented in this report comes explicitly from the Traffic Engineering Accident Analysis System based upon va criteria provided by the report's creator. The onus is strictly upon the user of this report to exercise due diligence in in and further representing this data.

DocuSign Envelope ID: 5C03745C-4B01-4834-A65D-B77F558A4F46

Strip Diagram

Features	Milepost	Crash IDs
STRUCTURE: 100238 | STRUCTURE: 100235	19.69	104506926 | 104541717 | 104583161 | 104631932 |
| SR 3431 | POND		104663303 | 104671221 | 104893701 | 105030704 |
		105050170 | 105070692 | 105237111 | 105345839 |
		105399315 | 105499904 | 105506978
	19.70	
	19.71	105288555
	19.72	
	19.73	104557376 | 105295997
	19.74	
	19.75	
	19.76	104625238 | 104962990 | 104048150
	19.77	
	19.78	
	19.79	104865185 | 104977248 | 105345528
MILE MARKER 1	19.80	104651511
MILE MARKER 32	19.81	105494600
	19.82	
	19.83	
	19.84	
	19.85	104906548
	19.86	
	19.87	
	19.88	
	19.89	104959885 | 105108349 | 105309281 | 105572077
	19.90	
	19.91	104107765 | 104573036 | 104630869 | 105694135
	19.92	
	19.93	
	19.94	
	19.95	104018991 | 104121812 | 104276142 | 104417132 |
		104443717 | 104476589 | 104573095 | 104952480 |
		104986827 | 105150587 | 105183813 | 105185630 |
		105338071 | 105487205 | 105666881 | 105664705
	19.96	
	19.97	
	19.98	
	19.99	104628907 | 105056870
	20.00	
	20.01	104039300 | 104300749 | 104427996 | 104470018 |
		104475440 | 104563158 | 104986965 | 105074382 |
		105137320 | 105430866 | 105493400 | 105530802

All data presented in this report comes explicitly from the Traffic Engineering Accident Analysis System based upon va criteria provided by the report's creator. The onus is strictly upon the user of this report to exercise due diligence in in and further representing this data.

DocuSign Envelope ID: 5C03745C-4B01-4834-A65D-B77F558A4F46

Features	Milepost	Crash IDs
	20.02	
	20.03	
	20.04	
	20.05	
	20.06	
	20.07	
	20.08	
	20.09	
	20.10	
	20.11	
	20.12	
	20.13	
	20.14	104983657
	20.15	
	20.16	
	20.17	
	20.18	
	20.19	
	20.20	
	20.21	104531550 | 104712722 | 105094255 | 105337995
	20.22	
	20.23	
	20.24	105733979
	20.25	104961412 | 105104507 | 105337139
	20.26	104323990 | 104491977 | 105050994 | 105442337 | 105674168 | 104509268 | 105100855 | 105118886 | 105220040
	20.27	
	20.28	104855806
	20.29	
MILE MARKER 1.5	20.30	
	20.31	103953765 | 104027579 | 104316015 | 104356125 | 104765022 | 105307449 | 105577777
	20.32	
	20.33	
	20.34	
	20.35	
	20.36	
	20.37	
MILE MARKER 32.5	20.38	104504678
	20.39	104018845 | 105363040
	20.40	
	20.41	104035329 | 104104401 | 104429010 | 104469344 | 104659095 | 104837071 | 104814479 | 105026525 |

All data presented in this report comes explicitly from the Traffic Engineering Accident Analysis System based upon va criteria provided by the report's creator. The onus is strictly upon the user of this report to exercise due diligence in in and further representing this data.

DocuSign Envelope ID: 5C03745C-4B01-4834-A65D-B77F558A4F46

Features	Milepost	Crash IDs
		105309283 | 105573877
	20.42	
	20.43	104475473 | 104662823 | 105050159
	20.44	105159346
	20.45	104175096 | 104665621 | 105288409 | 104199124 | 105280988
	20.46	104148096
	20.47	104409765 | 104443688 | 104412833 | 104443693 | 104531339 | 104671863 | 104679942 | 105073313 | 104694383 | 104269047
	20.48	
	20.49	104622251
	20.50	104263590 | 104213918 | 104322637 | 104622248
NC 191 | EXIT 33 | BREVARD	20.51	104199126 | 104379473 | 104387470 | 104387489 | 104401135 | 104503191 | 104509312 | 104562612 | 104573105 | 104573104 | 104644636 | 104719431
	20.52	104422250
	20.53	104015765 | 104332499 | 104343347 | 104546567
	20.54	104112868
	20.55	104123520 | 104746685 | 104837487
	20.56	
	20.57	
	20.58	
	20.59	105162275
	20.60	104505649
	20.61	104099413 | 104162500 | 104223913 | 104413210 | 104411092 | 104587053 | 104590522 | 104847295 | 104906915 | 104922638 | 105101314 | 105221880 | 105325132 | 105373248 | 105604687 | 105610078 | 105679359 | 105716333 | 105716135
	20.62	
	20.63	
	20.64	
	20.65	105744242
	20.66	104032679 | 104052366 | 104527976 | 104586815 | 105143501
	20.67	
	20.68	104240107
	20.69	105029830
	20.70	
	20.71	104817752 | 104822590 | 105095189 | 105102421 | 105107528 | 105136541 | 105154943 | 105435240 |

DocuSign Envelope ID: 5C03745C-4B01-4834-A65D-B77F558A4F46

Features	Milepost	Crash IDs
		105711846
	20.72	
	20.73	
	20.74	
	20.75	105190852 | 105416618
MILE MARKER 33	20.76	104422032 | 105036849 | 105117247 | 105118420 | 105163305 | 105197891 | 105224804 | 105311373 | 105345417 | 105431338 | 105456253 | 105494341 | 105494320 | 104231080 | 104492385 | 105521765 | 105558247 | 105559256 | 104136647 | 104905821
	20.77	103988533 | 104817753 | 104919905 | 104921044 | 104952401 | 105092061 | 105378197 | 105484769
	20.78	
	20.79	
MILE MARKER 2	20.80	105220135
	20.81	104824023 | 104890420 | 104979456 | 105148393 | 105446057
STRUCTURE: 100226	20.82	104447055 | 104461252 | 105257693
	20.83	
	20.84	
	20.85	104832866
	20.86	104064736 | 104138591 | 104250798 | 104238637 | 104955624 | 105308098 | 105452089 | 105635767
	20.87	
	20.88	104792111 | 105245622
	20.89	
	20.90	
	20.91	104515648 | 104517133 | 104623617 | 105226623
	20.92	
	20.93	
	20.94	
	20.95	105169150 | 105231901 | 104614005
	20.96	104181523 | 104186075 | 104377735 | 104596671 | 104596672 | 104747777 | 105095207 | 104583395
	20.97	
	20.98	
	20.99	
	21.00	
	21.01	104245298 | 104351076 | 104420804 | 104526787 | 104593027 | 104672587 | 104730949 | 104750969 | 104974262 | 105014510 | 105188103 | 105206518 | 105329035 | 105351578 | 105586066 | 105608351 | 105674536

All data presented in this report comes explicitly from the Traffic Engineering Accident Analysis System based upon va criteria provided by the report's creator. The onus is strictly upon the user of this report to exercise due diligence in in and further representing this data.

DocuSign Envelope ID: 5C03745C-4B01-4834-A65D-B77F558A4F46

Features	Milepost	Crash IDs
	21.02	
	21.03	
	21.04	
	21.05	104954134
	21.06	104029990 | 104852395 | 104957423 | 105215454 | 105299213 | 105525813 | 104804057 | 105454216
	21.07	
	21.08	
	21.09	
	21.10	
	21.11	104046147 | 104257947 | 105224079 | 105492908 | 105708927
	21.12	
	21.13	
	21.14	105036910 | 105337343
	21.15	104257971 | 104396731 | 105685744
	21.16	104852478
	21.17	
	21.18	
	21.19	104605712
	21.20	
	21.21	104811041 | 105152018 | 105602234
	21.22	
	21.23	
	21.24	105696892
MILE MARKER 33.5	21.25	
	21.26	104298758 | 104413945 | 104486123 | 104588123 | 104657516 | 104866448 | 104904066 | 104942560 | 105181865 | 105181866 | 105254756 | 105286642 | 105334495 | 105407022 | 105492170 | 105542842 | 105583030 | 104359189 | 105139037 | 105286162 | 105378525 | 105600624
	21.27	
	21.28	
	21.29	
MILE MARKER 2.5	21.30	
	21.31	104789908 | 105009493 | 105337342
	21.32	
	21.33	
	21.34	104533380
	21.35	104378131 | 104705802 | 104718533 | 104718532 | 104768863
	21.36	104852477 | 104873129

All data presented in this report comes explicitly from the Traffic Engineering Accident Analysis System based upon va criteria provided by the report's creator. The onus is strictly upon the user of this report to exercise due diligence in in and further representing this data.

DocuSign Envelope ID: 5C03745C-4B01-4834-A65D-B77F558A4F46

Features	Milepost	Crash IDs
	21.37	
	21.38	
	21.39	105663214
	21.40	
	21.41	104251358 | 105013133 | 105058957 | 105168501 | 105670516
	21.42	
	21.43	
	21.44	
	21.45	104379865 | 104698255
	21.46	104736147 | 104016503 | 105307542
	21.47	
	21.48	
	21.49	
	21.50	
	21.51	104437445 | 104096261 | 104371345 | 104398836 | 104427949 | 104447193 | 104432457 | 104469142 | 104575916 | 104659776 | 104773105 | 104808925 | 104982374 | 104982375 | 105103562 | 105104532 | 105371461 | 105454097 | 105534191 | 105615722 | 105608350 | 105666322 | 105661349 | 105685921 | 105721473 | 104184652 | 105229072
	21.52	
	21.53	
	21.54	
	21.55	104463786 | 104589923 | 105354642 | 105670691 | 105670667
	21.56	104583399 | 104725437 | 104770686 | 104776676 | 105722680 | 104125400 | 104161492 | 104679236 | 104682098 | 104942471 | 105435798 | 105477428 | 105528876 | 105543912
	21.57	
	21.58	
	21.59	
	21.60	
	21.61	104931673 | 105113644 | 105245240 | 105286587 | 105646928
	21.62	
	21.63	104552710
	21.64	104328751 | 104359851
	21.65	104963752 | 104181522 | 105525814
	21.66	104648354 | 105529044 | 104372941 | 104382374 | 104375928 | 104443826 | 104955623 | 104961367 |

DocuSign Envelope ID: 5C03745C-4B01-4834-A65D-B77F558A4F46

Features	Milepost	Crash IDs
		105113441 | 105299939 | 105386179 | 105464459
	21.67	
	21.68	
SR 3482 | FERRY	21.69	
	21.70	
	21.71	104178460 | 104595054 | 104691704 | 104793416 |
		105148331 | 105369046 | 105534423
	21.72	105276884
	21.73	
	21.74	104455138
	21.75	105123585 | 105283873 | 105522100 | 104989533
MILE MARKER 34	21.76	104193294 | 104247352 | 104295017 | 104299152 |
		104364846 | 104590542 | 104590543 | 104593019 |
		104668372 | 104767734 | 104861176 | 104890809 |
		104897959 | 104919703 | 105193482 | 105206479 |
		105229409 | 105245552 | 105262934 | 105360367 |
		105296479 | 105351787 | 105400787 | 105486647 |
		105486648 | 105493691 | 105494148 | 105512791 |
		105559734 | 105635748 | 105658735 | 105688530 |
		105711361 | 104379860 | 104652200 | 104805360 |
		104812215 | 105299303 | 105430494 | 104531828 |
		104979518 | 105098274 | 105232187 | 105233425 |
		105462351
	21.77	105234571 | 105454562
	21.78	104522953
	21.79	105583045
MILE MARKER 3	21.80	104547555
	21.81	105152021 | 105485278
	21.82	
	21.83	
	21.84	
	21.85	
	21.86	105219476 | 104098221 | 104380209 | 104392008 |
		104415320 | 104424852 | 104691755 | 105115946 |
		105181496 | 105257710 | 105298940 | 105332225 |
		105477290 | 105723966
	21.87	
	21.88	104366530
	21.89	
	21.90	
	21.91	104709569
	21.92	104247356

DocuSign Envelope ID: 5C03745C-4B01-4834-A65D-B77F558A4F46

Features	Milepost	Crash IDs
	21.93	
	21.94	
	21.95	
	21.96	104480614 | 105245180 | 104235102 | 104453110 | 104705728 | 105149693 | 105386159 | 105414726 | 105433839 | 105542859 | 105547961 | 105695007 | 105261517 | 105262676
	21.97	
	21.98	
	21.99	
	22.00	105264113
	22.01	104433143 | 104447336 | 104472516 | 104478570 | 104547462 | 104600588 | 104672610 | 104763272 | 104921045 | 105088730 | 105220547 | 105347246 | 105454128 | 105512433 | 105528457 | 105604690 | 105608349 | 105628968
	22.02	
	22.03	
	22.04	
	22.05	104052408
	22.06	104289384 | 104286466
	22.07	
	22.08	
	22.09	
	22.10	
	22.11	
	22.12	
	22.13	
	22.14	104359835 | 105094236
	22.15	
	22.16	104529318 | 104522993 | 104528549 | 104538054 | 104560733 | 104905846 | 105416867 | 105414527 | 105560066 | 105626974 | 104404025
	22.17	
	22.18	104767726
	22.19	
	22.20	
	22.21	103955477 | 105307560 | 105505939
	22.22	104219764
	22.23	
	22.24	
	22.25	104720197
MILE MARKER 34.5	22.26	104199678 | 104412279 | 104097432 | 104174671 |

DocuSign Envelope ID: 5C03745C-4B01-4834-A65D-B77F558A4F46

Features	Milepost	Crash IDs
		104359022 | 104494345 | 104558579 | 104739035 |
		104785924 | 104805397 | 104842291 | 105057221 |
		105181864 | 105266967 | 105276872 | 105300413 |
		105528032 | 105542861 | 105635764 | 105635763 |
		103971471 | 104139069 | 104163986 | 104392423 |
		104384768 | 104458908 | 104603437 | 104811043 |
		104866450 | 104915061 | 104951543 | 105264094 |
		105300312 | 105332144 | 105332233 | 105627274 |
		105628909 | 105652754
	22.27	
	22.28	
	22.29	
MILE MARKER 3.5	22.30	
	22.31	104258209 | 105153253
	22.32	104633574
	22.33	
	22.34	
	22.35	
	22.36	104327178 | 104679788 | 104904078 | 105062910 |
		105541260 | 104225196 | 104224058 | 104224062 |
		104406628 | 104428885 | 105278259 | 105646936 |
		105646935
	22.37	
	22.38	
	22.39	
	22.40	
	22.41	104038402 | 104038788 | 104038787 | 104038768 |
		104612167 | 104932158 | 104910143
	22.42	
	22.43	
	22.44	
STRUCTURE: 100214 | STRUCTURE: 100211	22.45	103960599 | 104097030 | 104086822 | 104131410 |
		104133400 | 104168246 | 104211527 | 104258804 |
		104263775 | 104299935 | 104505658 | 104509797 |
		104505656 | 104519926 | 104522682 | 104614206 |
		104789950 | 104789949 | 104815326 | 104911740 |
		104921546 | 104948424 | 105402520 | 105417086 |
		105554853 | 105596929 | 105623538 | 105635383 |
		105688496
	22.46	104520262 | 104652095 | 104776439 | 104193275 |
		104593624 | 105375345
	22.47	
	22.48	

All data presented in this report comes explicitly from the Traffic Engineering Accident Analysis System based upon va criteria provided by the report's creator. The onus is strictly upon the user of this report to exercise due diligence in in and further representing this data.

DocuSign Envelope ID: 5C03745C-4B01-4834-A65D-B77F558A4F46

Features	Milepost	Crash IDs
	22.49	103956190
	22.50	
	22.51	104515718 | 104561081 | 104659548 | 104688884 | 104936771 | 104910033 | 104922673 | 105015780 | 105188520 | 105534108 | 105549175 | 105554759 | 105647211
	22.52	
	22.53	
	22.54	
	22.55	
	22.56	104335180 | 104363484 | 105145760 | 104341837 | 104371529 | 104374311 | 104711722 | 104843749 | 104900522 | 104905836 | 105596734 | 105658532
	22.57	
	22.58	
	22.59	
	22.60	
	22.61	104333258 | 104669120 | 104905834 | 105206519 | 105400922 | 105423229
	22.62	
	22.63	
	22.64	
	22.65	
	22.66	104817979 | 105002696 | 105686021 | 104038790 | 104075605 | 104097388 | 104101637 | 104101865 | 104219765 | 104336001 | 104424128 | 104524643 | 105070075 | 105070876 | 105123380 | 105181811 | 105209240 | 105332253 | 105674780 | 105725233
	22.67	104668177 | 105156064 | 105545923
	22.68	
	22.69	
	22.70	
	22.71	105095208 | 105104611 | 105575649
	22.72	
	22.73	104309496 | 105643487
	22.74	105059015
	22.75	105234575 | 104030334 | 104039648 | 104354472 | 104364609 | 104385136 | 104776677 | 105307608 | 105353736 | 105442742 | 105464321
MILE MARKER 35	22.76	104830263 | 104993882 | 105000750 | 105583029 | 104417087 | 104461382 | 104549841 | 104837488 | 104837481 | 105019534 | 105058838 | 105090860 | 105125889 | 105166638 | 105293192 | 105406767 |

All data presented in this report comes explicitly from the Traffic Engineering Accident Analysis System based upon va criteria provided by the report's creator. The onus is strictly upon the user of this report to exercise due diligence in in and further representing this data.

DocuSign Envelope ID: 5C03745C-4B01-4834-A65D-B77F558A4F46

North Carolina Department of Transportation
Traffic Engineering Accident Analysis System
Strip Analysis Report

Features	Milepost	Crash IDs
		105435702 | 105502079 | 105534386 | 105711294 |
		104101759 | 104280593 | 104382381 | 104396629 |
		104522722 | 104526658 | 104593038 | 104653784 |
		104731042 | 105147924 | 105389846 | 105520510 |
		105658531
	22.77	
	22.78	
	22.79	
MILE MARKER 4	22.80	
	22.81	104396935 | 104664273 | 104679805 | 105423221
	22.82	
	22.83	104781097
	22.84	
	22.85	105661589
	22.86	104873196 | 104101625 | 104789902 | 105090495 |
		105307424 | 105360599 | 105500015
	22.87	
	22.88	
	22.89	104203281
	22.90	
	22.91	
	22.92	
	22.93	
	22.94	
	22.95	104986816 | 105307428
	22.96	105667257 | 104942113 | 104987715 | 105299927 |
		105300417 | 105400548
	22.97	
	22.98	
	22.99	
	23.00	
	23.01	104295050 | 104616149 | 104805362 | 104866076 |
		104873554
	23.02	
	23.03	
	23.04	104865853 | 105541575
	23.05	
	23.06	104492418 | 105059014
	23.07	
	23.08	
	23.09	
	23.10	
	23.11	104307443 | 105246169

All data presented in this report comes explicitly from the Traffic Engineering Accident Analysis System based upon va
criteria provided by the report's creator. The onus is strictly upon the user of this report to exercise due diligence in in
and further representing this data.

DocuSign Envelope ID: 5C03745C-4B01-4834-A65D-B77F558A4F46

Features	Milepost	Crash IDs
	23.12	
	23.13	
	23.14	104022694 | 104128350 | 104323308 | 104359097 | 104725986 | 105243036 | 105253383 | 105338078 | 105666375
	23.15	
	23.16	105211995 | 105466740 | 105662053 | 104353097 | 105532603 | 104472236 | 104522138
	23.17	
	23.18	
	23.19	
	23.20	
	23.21	104355773 | 105635259 | 105635528
	23.22	
	23.23	105037715
	23.24	104890549
	23.25	104112207 | 104691980 | 104930341 | 104966285 | 105084968 | 105181343 | 105218054 | 105262591 | 105331916 | 105439572 | 105485193 | 105492847 | 105528330 | 105540953 | 105652379
MILE MARKER 35.5	23.26	104003572 | 104199690 | 104443691 | 104670956 | 103982666 | 104112204 | 104272159 | 104315338 | 104522979 | 104739044 | 104817480 | 105335421 | 105342311 | 105414785 | 105460579 | 105482482
	23.27	104428862
	23.28	104298462
	23.29	
MILE MARKER 4.5	23.30	
	23.31	
	23.32	
	23.33	
	23.34	104126429 | 105610647
	23.35	104232226 | 104680835 | 105687813
	23.36	104251483 | 104543736 | 104656340 | 104882535 | 105060370 | 105243820 | 105647143 | 104931671 | 105145752
	23.37	
	23.38	
	23.39	
	23.40	
	23.41	104139812
	23.42	
	23.43	

All data presented in this report comes explicitly from the Traffic Engineering Accident Analysis System based upon va criteria provided by the report's creator. The onus is strictly upon the user of this report to exercise due diligence in in and further representing this data.

DocuSign Envelope ID: 5C03745C-4B01-4834-A65D-B77F558A4F46

Features	Milepost	Crash IDs
	23.44	105290678
	23.45	104183809 | 105643901 | 105694672
	23.46	105723965
	23.47	
	23.48	
	23.49	
	23.50	
	23.51	
	23.52	105168643
	23.53	
	23.54	104614013 | 104989074 | 105292996
	23.55	
	23.56	104413419 | 105243829 | 105628981 | 104958112
	23.57	
	23.58	
	23.59	
	23.60	
	23.61	
	23.62	
	23.63	
	23.64	104097083 | 104250515 | 104368181 | 104453220 | 104720190 | 105009528 | 105086207 | 105326664 | 105329303 | 105400503 | 105721048
	23.65	
	23.66	103965585 | 104283292 | 104366512 | 104410865 | 104896228 | 104919888 | 104921521 | 105265152 | 105643489 | 105723961
	23.67	
	23.68	
	23.69	
	23.70	
	23.71	
	23.72	105688550
	23.73	
	23.74	
MILE MARKER 36	23.75	104181572 | 104186219 | 104203100 | 104279696 | 104336002 | 104427103 | 104427109 | 104436032 | 104547458 | 104836367 | 104937737 | 104960981 | 105104528 | 105253610 | 105353513 | 105353483 | 105534050 | 105546017 | 105560728 | 105674363
	23.76	105015768 | 105020339 | 105214814 | 105679464 | 105714868 | 104896105 | 105339728 | 105473655 | 105498350

All data presented in this report comes explicitly from the Traffic Engineering Accident Analysis System based upon va criteria provided by the report's creator. The onus is strictly upon the user of this report to exercise due diligence in in and further representing this data.

DocuSign Envelope ID: 5C03745C-4B01-4834-A65D-B77F558A4F46

Features	Milepost	Crash IDs
	23.77	105009496 | 105649575
	23.78	
	23.79	
MILE MARKER 5	23.80	
	23.81	105661947
	23.82	
	23.83	
	23.84	105242720 | 105559753 | 105658479
	23.85	104164017 | 104191950 | 104657577 | 104799420 | 105012643 | 105084131 | 105153753 | 105220554 | 105296647 | 105629199 | 105644115 | 105703563
	23.86	
	23.87	
	23.88	
	23.89	105107484
	23.90	
	23.91	
	23.92	
	23.93	
	23.94	104351077 | 104609780 | 105089160 | 105245268 | 104152881
	23.95	104812262 | 105103457 | 105534065
	23.96	
	23.97	
	23.98	
	23.99	
	24.00	104051501
	24.01	
	24.02	
	24.03	
	24.04	104396654 | 104396653 | 104518391 | 104748283 | 105532338 | 105528846 | 104335179
	24.05	
	24.06	105069398 | 105166533 | 105308233
	24.07	
BLUE RIDGE	24.08	
	24.09	
	24.10	
	24.11	
	24.12	
	24.13	
	24.14	103951439 | 104050857 | 104075600 | 104283284 | 104356097 | 104780072 | 104812120 | 104847370 | 105040271 | 105156086 | 105192256 | 105198430 |

All data presented in this report comes explicitly from the Traffic Engineering Accident Analysis System based upon va criteria provided by the report's creator. The onus is strictly upon the user of this report to exercise due diligence in in and further representing this data.

DocuSign Envelope ID: 5C03745C-4B01-4834-A65D-B77F558A4F46

Features	Milepost	Crash IDs
		105233499 | 105307784 | 105313740 | 105492381 |
		105528825 | 105562039 | 105570089 | 105585879 |
		105639951 | 105687010 | 105105545 | 105670583
	24.15	
	24.16	105229403
	24.17	
	24.18	
	24.19	
	24.20	
	24.21	
	24.22	
	24.23	
MILE MARKER 36.5	24.24	104725454 | 104098385 | 104566169 | 104961353 |
		105127501
	24.25	105229669 | 103968988 | 104182152 | 104182153 |
		104323226 | 104328101 | 104349913 | 104379974 |
		104413457 | 104446046 | 104482263 | 104572676 |
		104726350 | 104860616 | 104931925 | 104948427 |
		104961377 | 104973098 | 105168642 | 105172027 |
		105172026 | 105174995 | 105218216 | 105243031 |
		105286638 | 105351027 | 105535769 | 105538539 |
		105559621 | 105652171 | 105699478 | 105723126 |
		105727577
	24.26	
	24.27	
	24.28	
	24.29	
MILE MARKER 5.5	24.30	
	24.31	
	24.32	
	24.33	
	24.34	104335103 | 104553327 | 104910221 | 105553962 |
		105600889 | 104227458 | 105492297
	24.35	104278666 | 104566317 | 104566205 | 104565869 |
		104653801 | 104919860 | 105103453 | 105229570 |
		105262930 | 105423117
	24.36	
	24.37	
	24.38	
	24.39	
	24.40	
	24.41	
	24.42	

All data presented in this report comes explicitly from the Traffic Engineering Accident Analysis System based upon va criteria provided by the report's creator. The onus is strictly upon the user of this report to exercise due diligence in in and further representing this data.

DocuSign Envelope ID: 5C03745C-4B01-4834-A65D-B77F558A4F46

Features	Milepost	Crash IDs
	24.43	
	24.44	104066179 | 105528456 | 105528455 | 105447982 | 105447981
	24.45	104066156 | 104328051 | 104331947 | 104760512 | 104825111 | 105711436
	24.46	
	24.47	
	24.48	
	24.49	
	24.50	
	24.51	
	24.52	
STRUCTURE: 100158 | STRUCTURE: 100157	24.53	104890421 | 105344393
	24.54	104066225 | 104070679 | 104515803 | 104575474
	24.55	
	24.56	104184656 | 104344163 | 104442591 | 104616412 | 104760333 | 104877166 | 104910178 | 105110690 | 105322786 | 105322789 | 105329330 | 105412951 | 105602195 | 105686910
	24.57	
	24.58	
	24.59	
	24.60	
	24.61	
	24.62	
	24.63	
	24.64	104178491 | 104408068 | 104446028 | 104444337 | 104890601 | 104910201 | 104925633 | 105114557 | 105243075 | 105389802 | 105520658 | 105541329 | 105541701 | 105602226 | 105624233 | 105661099
	24.65	
	24.66	104000708 | 104099057 | 104099058 | 104112205 | 104142604 | 104214177 | 104421684 | 104538591 | 104538602 | 104553127 | 104808759 | 104880906 | 104935301 | 105037763 | 105066276 | 105213387 | 105286640 | 105386178 | 105512473 | 105528215 | 105549200 | 105561022 | 105720868
	24.67	
	24.68	104078919
	24.69	
	24.70	
	24.71	104006853
	24.72	

DocuSign Envelope ID: 5C03745C-4B01-4834-A65D-B77F558A4F46

Features	Milepost	Crash IDs
	24.73	
	24.74	104898017 | 105624677 | 104208606 | 104231979 | 104411865 | 104428905 | 105174511 | 105602231 | 105086815 | 105101344 | 105498142 | 105711207
MILE MARKER 37	24.75	105220469 | 105466523 | 104449022 | 104152883 | 104685025 | 104825030 | 104931694 | 104931693 | 105019372 | 105050251 | 105134946
	24.76	105063019 | 105640132 | 104896102 | 104937718 | 105048197 | 105296480 | 105554933 | 105276430 | 105125779 | 105660485
	24.77	105086953 | 105462720 | 104193293
	24.78	
	24.79	
MILE MARKER 6	24.80	
	24.81	104966411 | 105680892
	24.82	
	24.83	104366531 | 104785910 | 104890550 | 104935425 | 105040263 | 105347217
	24.84	104112993 | 104324853 | 104436121 | 104491186 | 104583566 | 104653739 | 104664367 | 104725439 | 104726351 | 104804901 | 104951060 | 105134605 | 105696652
	24.85	104070618 | 104097749 | 104173321 | 104215582 | 104344159 | 104371549 | 104414322 | 104491989 | 104522780 | 104538514 | 104566282 | 104691956 | 104739067 | 104786119 | 104873857 | 104960923 | 105113387 | 105113807 | 105280034 | 105284295 | 105441394 | 105486654 | 105528418 | 105538426 | 105649574 | 105660934 | 105717494
	24.86	105640088 | 105681005 | 105685743 | 105412949 | 105459177
	24.87	105168284 | 105583675
	24.88	104535881 | 104535880 | 104268102
	24.89	104209125 | 104235109 | 104572754 | 105417141 | 105652764 | 105266862
	24.90	
	24.91	104239726
	24.92	
	24.93	
	24.94	103987561 | 104080643 | 104208446 | 104437521 | 104474328 | 104599811 | 104688872 | 104961368 | 104961370 | 104962601 | 104993870 | 105245077

DocuSign Envelope ID: 5C03745C-4B01-4834-A65D-B77F558A4F46

Features	Milepost	Crash IDs
	24.95	104038786 | 104432466 | 104782292 | 104837528 | 104871185 | 104910015 | 105252953 | 105450710 | 105721890
	24.96	105685740 | 104942568 | 105492412 | 105492414
	24.97	
	24.98	
	24.99	104672710
	25.00	
	25.01	
	25.02	
	25.03	
	25.04	104082868 | 104178184 | 104205976 | 104256172 | 104258806 | 104277820 | 104316254 | 104341905 | 104348997 | 104440826 | 104457501 | 104557220 | 104583362 | 104602513 | 104659455 | 104680911 | 104743398 | 104776695 | 104780079 | 104785753 | 104785884 | 104836891 | 104866518 | 104877156 | 104904281 | 104951546 | 104955751 | 105069137 | 105090465 | 105114150 | 105148084 | 105150165 | 105210865 | 105414487 | 105456061 | 105477184 | 105534434 | 105554617 | 105569951 | 105630412 | 105641609 | 105670608 | 105711046 | 105714615
	25.05	
	25.06	104004079 | 104367970 | 104538237 | 104538238 | 104637467 | 105528863 | 105635581
	25.07	
	25.08	
	25.09	
	25.10	105469915
	25.11	105627378
	25.12	104437433 | 104032717
	25.13	
STRUCTURE: 100114 | STRUCTURE: 100113 | NC 146 | LONG SHOALS | EXIT 37	25.14	104741025 | 104747463 | 105644506
	25.15	
	25.16	104043506 | 104566931 | 104904063 | 105464291 | 105498107 | 105600942
	25.17	
	25.18	104646903 | 104890555
	25.19	104351028
	25.20	
	25.21	
	25.22	

DocuSign Envelope ID: 5C03745C-4B01-4834-A65D-B77F558A4F46

North Carolina Department of Transportation
Traffic Engineering Accident Analysis System
Strip Analysis Report

Features	Milepost	Crash IDs
	25.23	
	25.24	103972509 | 104086815 | 104192003 | 104208436 | 104437524 | 104437522 | 104599693 | 104653767 | 104789877 | 104817464 | 104862496 | 105502245 | 105534054 | 105706155 | 105723963
	25.25	104098455 | 104208462 | 104442442 | 104462780 | 104528562 | 104532344 | 104999385 | 105042170 | 105439570 | 105534075 | 105585794
	25.26	104705721 | 104718581 | 105227720 | 105337907 | 105510623
	25.27	
	25.28	
	25.29	
	25.30	
	25.31	105265348 | 104331937 | 104374399
	25.32	
	25.33	
	25.34	104789876 | 104852925 | 104920030 | 104954250 | 105256269 | 105420849 | 105610085
	25.35	
	25.36	104235159 | 104925664 | 105159255 | 105724070
	25.37	
	25.38	
	25.39	104424222 | 105622790
	25.40	
	25.41	
	25.42	
	25.43	
	25.44	104053677 | 104437528 | 104437527 | 104504489 | 104817601 | 105182837 | 104695850 | 104817471 | 104896167 | 105168499 | 105268933 | 105616275
	25.45	
	25.46	104852411 | 104873447
	25.47	104079298
	25.48	
	25.49	
	25.50	
	25.51	104199636
2000FT SOUTH NC146	25.52	

All data presented in this report comes explicitly from the Traffic Engineering Accident Analysis System based upon va criteria provided by the report's creator. The onus is strictly upon the user of this report to exercise due diligence in in and further representing this data.

DocuSign Envelope ID: 5C03745C-4B01-4834-A65D-B77F558A4F46

North Carolina Department of Transportation
Traffic Engineering Accident Analysis System
Strip Analysis Report

Study Criteria Summary

County: BUNCOMBE **City:** All and Rural
Date: 04/01/2016 **to** 03/31/2021 **Study:** 41000064325
Location: NC 146 (Long Shoals Rd) from SR 3501 (Clayton Rd) to Skyland Inn Dr/Schenck Pkwy

Report Details

Acc No	Crash ID	Milepost	Date	Accident Type	Total Damage	Injuries F	A	B	C	Condition R	L	W	Road Ch	Ci	Trfc Ctl Dv	Op
1	**106030093**	1.060	10/18/2019 15:11	FIXED OBJECT	$ 4000	0	0	1	0	1	1	1	5	0	13	1
Unit 1 : 4	**Alchl/Drgs:** 0	**Speed:** 35 MPH	**Dir:** S	**Veh Mnvr/Ped Actn:** 4	**Obj Strk:** 33											
2	**105220559**	1.061	09/11/2017 15:40	SIDESWIPE, SAME DIRECTION	$ 7000	0	0	0	0	2	1	3	3	0	3	1
Unit 1 : 10	**Alchl/Drgs:** 0	**Speed:** 45 MPH	**Dir:** E	**Veh Mnvr/Ped Actn:** 4	**Obj Strk:**											
Unit 2 : 4	**Alchl/Drgs:** 0	**Speed:** 45 MPH	**Dir:** E	**Veh Mnvr/Ped Actn:** 1	**Obj Strk:**											
3	**105605021**	1.063	09/15/2018 22:43	LEFT TURN, SAME ROADWAY	$ 5500	0	0	0	1	1	5	2	1	0	3	1
Unit 1 : 4	**Alchl/Drgs:** 0	**Speed:** 20 MPH	**Dir:** N	**Veh Mnvr/Ped Actn:** 8	**Obj Strk:**											
Unit 2 : 1	**Alchl/Drgs:** 0	**Speed:** 20 MPH	**Dir:** E	**Veh Mnvr/Ped Actn:** 8	**Obj Strk:**											
4	**105610477**	1.063	09/22/2018 09:01	REAR END, SLOW OR STOP	$ 1500	0	0	0	0	1	1	1	1	0	3	1
Unit 1 : 2	**Alchl/Drgs:** 0	**Speed:** 35 MPH	**Dir:** E	**Veh Mnvr/Ped Actn:** 11	**Obj Strk:**											
Unit 2 : 4	**Alchl/Drgs:** 0	**Speed:** 35 MPH	**Dir:** E	**Veh Mnvr/Ped Actn:** 1	**Obj Strk:**											
5	**105896203**	1.064	06/14/2019 12:05	REAR END, SLOW OR STOP	$ 300	0	0	0	0	1	1	1	3	0	3	1
Unit 1 : 1	**Alchl/Drgs:** 0	**Speed:** 15 MPH	**Dir:** NE	**Veh Mnvr/Ped Actn:** 4	**Obj Strk:**											
Unit 2 : 4	**Alchl/Drgs:** 0	**Speed:** 0 MPH	**Dir:** NE	**Veh Mnvr/Ped Actn:** 11	**Obj Strk:**											
6	**104998190**	1.069	02/03/2017 09:10	SIDESWIPE, SAME DIRECTION	$ 3500	0	0	0	0	1	1	1	3	0	3	1
Unit 1 : 1	**Alchl/Drgs:** 0	**Speed:** 10 MPH	**Dir:** SE	**Veh Mnvr/Ped Actn:** 8	**Obj Strk:**											
Unit 2 : 2	**Alchl/Drgs:** 0	**Speed:** 10 MPH	**Dir:** SE	**Veh Mnvr/Ped Actn:** 8	**Obj Strk:**											
7	**105250833**	1.069	10/10/2017 07:53	REAR END, SLOW OR STOP	$ 2000	0	0	0	0	2	1	1	3	0	3	1
Unit 1 : 4	**Alchl/Drgs:** 0	**Speed:** 45 MPH	**Dir:** S	**Veh Mnvr/Ped Actn:** 4	**Obj Strk:**											
Unit 2 : 2	**Alchl/Drgs:** 0	**Speed:** 45 MPH	**Dir:** S	**Veh Mnvr/Ped Actn:** 1	**Obj Strk:**											
8	**105273410**	1.069	10/31/2017 19:12	OTHER COLLISION WITH VEHICLE	$ 7000	0	0	0	3	1	5	1	3	0	3	1
Unit 1 : 1	**Alchl/Drgs:** 0	**Speed:** 5 MPH	**Dir:** E	**Veh Mnvr/Ped Actn:** 9	**Obj Strk:**											
Unit 2 : 1	**Alchl/Drgs:** 0	**Speed:** 35 MPH	**Dir:** N	**Veh Mnvr/Ped Actn:** 4	**Obj Strk:**											

DRAFT

DocuSign Envelope ID: 5C03745C-4B01-4834-A65D-B77F558A4F46

North Carolina Department of Transportation
Traffic Engineering Accident Analysis System
Strip Analysis Report

Acc No	Crash ID	Milepost	Date	Accident Type	Total Damage	Injuries F	A	B	C	Condition R	L	W	Road Ch	Ci	Trfc Ctl Dv	Op
9	**105721454**	1.069	12/23/2018 10:57	REAR END, SLOW OR STOP	$ 300	0	0	0	0	1	1	1	1	0	3	1
Unit 1 : 1	**Alchl/Drgs:** 0	**Speed:** 1 MPH	**Dir:** S	**Veh Mnvr/Ped Actn:** 4	**Obj Strk:**											
Unit 2 : 4	**Alchl/Drgs:** 0	**Speed:** 0 MPH	**Dir:** S	**Veh Mnvr/Ped Actn:** 1	**Obj Strk:**											
10	**105964144**	1.069	08/20/2019 14:27	REAR END, SLOW OR STOP	$ 950	0	0	0	0	1	1	2	3	0	3	1
Unit 1 : 10	**Alchl/Drgs:** 0	**Speed:** 0 MPH	**Dir:** S	**Veh Mnvr/Ped Actn:** 4	**Obj Strk:**											
Unit 2 : 1	**Alchl/Drgs:** 0	**Speed:** 0 MPH	**Dir:** S	**Veh Mnvr/Ped Actn:** 1	**Obj Strk:**											
11	**106276481**	1.069	07/13/2020 17:52	REAR END, SLOW OR STOP	$ 4000	0	0	0	0	1	1	1	3	0	13	1
Unit 1 : 4	**Alchl/Drgs:** 0	**Speed:** 40 MPH	**Dir:** N	**Veh Mnvr/Ped Actn:** 4	**Obj Strk:**											
Unit 2 : 4	**Alchl/Drgs:** 0	**Speed:** 35 MPH	**Dir:** N	**Veh Mnvr/Ped Actn:** 11	**Obj Strk:**											
12	**106313928**	1.069	08/20/2020 21:00	SIDESWIPE, SAME DIRECTION	$ 1100	0	0	0	0	1	5	2	3	0	3	1
Unit 1 : 1	**Alchl/Drgs:** 0	**Speed:** 10 MPH	**Dir:** E	**Veh Mnvr/Ped Actn:** 8	**Obj Strk:**											
Unit 2 : 4	**Alchl/Drgs:** 0	**Speed:** 10 MPH	**Dir:** E	**Veh Mnvr/Ped Actn:** 8	**Obj Strk:**											
13	**106346914**	1.069	09/24/2020 21:50	REAR END, SLOW OR STOP	$ 2500	0	0	0	0	2	5	3	1	0	3	1
Unit 1 : 1	**Alchl/Drgs:** 0	**Speed:** 20 MPH	**Dir:** S	**Veh Mnvr/Ped Actn:** 4	**Obj Strk:**											
Unit 2 : 1	**Alchl/Drgs:** 0	**Speed:** 0 MPH	**Dir:** S	**Veh Mnvr/Ped Actn:** 1	**Obj Strk:**											
14	**106447396**	1.069	12/24/2020 11:05	LEFT TURN, SAME ROADWAY	$ 7000	0	0	0	0	2	1	3	3	0	3	1
Unit 1 : 1	**Alchl/Drgs:** 0	**Speed:** 5 MPH	**Dir:** S	**Veh Mnvr/Ped Actn:** 8	**Obj Strk:**											
Unit 2 : 2	**Alchl/Drgs:** 0	**Speed:** 30 MPH	**Dir:** S	**Veh Mnvr/Ped Actn:** 8	**Obj Strk:**											
15	**106447126**	1.069	12/25/2020 18:13	SIDESWIPE, SAME DIRECTION	$ 5500	0	0	0	0	4	5	2	3	0	3	1
Unit 1 : 1	**Alchl/Drgs:** 0	**Speed:** 20 MPH	**Dir:** E	**Veh Mnvr/Ped Actn:** 11	**Obj Strk:**											
Unit 2 : 4	**Alchl/Drgs:** 0	**Speed:** 25 MPH	**Dir:** E	**Veh Mnvr/Ped Actn:** 11	**Obj Strk:**											
Unit 3 : 4	**Alchl/Drgs:** 0	**Speed:** 25 MPH	**Dir:** E	**Veh Mnvr/Ped Actn:** 11	**Obj Strk:**											
16	**105945530**	1.088	08/02/2019 11:26	FIXED OBJECT	$ 4900	0	0	0	2	1	1	2	3	0	3	1
Unit 1 : 2	**Alchl/Drgs:** 0	**Speed:** 20 MPH	**Dir:** E	**Veh Mnvr/Ped Actn:** 8	**Obj Strk:** 42											
17	**106504933**	1.107	03/03/2021 08:45	REAR END, SLOW OR STOP	$ 2500	0	0	0	0	1	1	1	3	0	0	
Unit 1 : 4	**Alchl/Drgs:** 0	**Speed:** 35 MPH	**Dir:** N	**Veh Mnvr/Ped Actn:** 4	**Obj Strk:**											
Unit 2 : 1	**Alchl/Drgs:** 0	**Speed:** 0 MPH	**Dir:** N	**Veh Mnvr/Ped Actn:** 1	**Obj Strk:**											

DRAFT

DocuSign Envelope ID: 5C03745C-4B01-4834-A65D-B77F558A4F46

North Carolina Department of Transportation
Traffic Engineering Accident Analysis System
Strip Analysis Report

Acc No	Crash ID	Milepost	Date	Accident Type	Total Damage	Injuries F	A	B	C	Condition R	L	W	Road Ch	Ci	Trfc Ctl Dv	Op
18	**106070149**	1.127	11/21/2019 18:09	ANIMAL	$ 2000	0	0	0	0	1	5	1	1	0	0	
Unit	**1 :** 4	**Alchl/Drgs:** 0	**Speed:** 35 MPH	**Dir:** S	**Veh Mnvr/Ped Actn:** 4	**Obj Strk:** 17										
19	**105370810**	1.169	01/30/2018 13:54	SIDESWIPE, SAME DIRECTION	$ 3100	0	0	0	0	1	1	1	3	0	0	
Unit	**1 :** 2	**Alchl/Drgs:** 0	**Speed:** 35 MPH	**Dir:** NE	**Veh Mnvr/Ped Actn:** 5	**Obj Strk:**										
Unit	**2 :** 4	**Alchl/Drgs:** 0	**Speed:** 40 MPH	**Dir:** NE	**Veh Mnvr/Ped Actn:** 4	**Obj Strk:**										
20	**106262662**	1.169	06/23/2020 12:20	SIDESWIPE, SAME DIRECTION	$ 55	0	0	0	0	2	1	2	3	0	0	
Unit	**1 :** 14	**Alchl/Drgs:** 0	**Speed:** 30 MPH	**Dir:** W	**Veh Mnvr/Ped Actn:** 5	**Obj Strk:**										
Unit	**2 :** 4	**Alchl/Drgs:** 0	**Speed:** 30 MPH	**Dir:** W	**Veh Mnvr/Ped Actn:** 4	**Obj Strk:**										
21	**105464460**	1.220	04/29/2018 10:51	RIGHT TURN, DIFFERENT ROADWAYS	$ 13500	0	0	0	5	1	1	1	3	0	0	
Unit	**1 :** 1	**Alchl/Drgs:** 0	**Speed:** 15 MPH	**Dir:** W	**Veh Mnvr/Ped Actn:** 12	**Obj Strk:**										
Unit	**2 :** 1	**Alchl/Drgs:** 0	**Speed:** 35 MPH	**Dir:** W	**Veh Mnvr/Ped Actn:** 4	**Obj Strk:**										
Unit	**3 :** 4	**Alchl/Drgs:** 0	**Speed:** 30 MPH	**Dir:** N	**Veh Mnvr/Ped Actn:** 4	**Obj Strk:**										
22	**106371585**	1.240	10/17/2020 19:43	ANIMAL	$ 1000	0	0	0	0	1	5	1	3	0	0	
Unit	**1 :** 4	**Alchl/Drgs:** 0	**Speed:** 35 MPH	**Dir:** W	**Veh Mnvr/Ped Actn:** 4	**Obj Strk:** 17										
23	**106453218**	1.340	12/31/2020 18:51	ANIMAL	$ 500	0	0	0	0	1	5	2	3	0	0	
Unit	**1 :** 2	**Alchl/Drgs:** 0	**Speed:** 45 MPH	**Dir:** E	**Veh Mnvr/Ped Actn:** 4	**Obj Strk:** 17										
24	**106498334**	1.340	02/24/2021 18:31	ANIMAL	$ 3000	0	0	0	0	1	2	1	1	0	0	
Unit	**1 :** 4	**Alchl/Drgs:** 0	**Speed:** 45 MPH	**Dir:** E	**Veh Mnvr/Ped Actn:** 4	**Obj Strk:** 17										
25	**105722958**	1.421	12/21/2018 07:26	OTHER COLLISION WITH VEHICLE	$ 3000	0	0	0	0	2	5	3	3	0	0	
Unit	**1 :** 1	**Alchl/Drgs:** 0	**Speed:** 45 MPH	**Dir:** W	**Veh Mnvr/Ped Actn:** 4	**Obj Strk:**										
Unit	**2 :** 1	**Alchl/Drgs:** 0	**Speed:** 45 MPH	**Dir:** W	**Veh Mnvr/Ped Actn:** 11	**Obj Strk:**										
26	**105905018**	1.421	06/23/2019 12:53	REAR END, SLOW OR STOP	$ 400	0	0	0	0	1	1	1	3	0	0	
Unit	**1 :** 1	**Alchl/Drgs:** 0	**Speed:** 10 MPH	**Dir:** E	**Veh Mnvr/Ped Actn:** 4	**Obj Strk:**										
Unit	**2 :** 1	**Alchl/Drgs:** 0	**Speed:** 10 MPH	**Dir:** E	**Veh Mnvr/Ped Actn:** 1	**Obj Strk:**										
27	**106057127**	1.421	10/29/2019 14:37	REAR END, SLOW OR STOP	$ 7000	0	0	0	0	1	1	1	1	0	0	2
Unit	**1 :** 1	**Alchl/Drgs:** 0	**Speed:** 25 MPH	**Dir:** E	**Veh Mnvr/Ped Actn:** 4	**Obj Strk:**										
Unit	**2 :** 10	**Alchl/Drgs:** 0	**Speed:** 25 MPH	**Dir:** E	**Veh Mnvr/Ped Actn:** 4	**Obj Strk:**										

DRAFT

DocuSign Envelope ID: 5C03745C-4B01-4834-A65D-B77F558A4F46

North Carolina Department of Transportation
Traffic Engineering Accident Analysis System
Strip Analysis Report

Acc No	Crash ID	Milepost	Date	Accident Type	Total Damage	Injuries F	A	B	C	Condition R	L	W	Road Ch	Ci	Trfc Ctl Dv	Op
28	**105296733**	1.427	11/20/2017 18:17	ANIMAL	$ 5000	0	0	0	0	1	5	1	3	0	0	
Unit	**1 :** 4	**Alchl/Drgs:** 0	**Speed:** 45 MPH	**Dir:** S	**Veh Mnvr/Ped Actn:** 4	**Obj Strk:** 17										
29	**105911004**	1.427	06/27/2019 17:09	BACKING UP	$ 1050	0	0	0	0	1	1	1	1	0	0	
Unit	**1 :** 14	**Alchl/Drgs:** 7	**Speed:** 0 MPH	**Dir:** W	**Veh Mnvr/Ped Actn:** 10	**Obj Strk:**										
Unit	**2 :** 1	**Alchl/Drgs:** 0	**Speed:** 45 MPH	**Dir:** W	**Veh Mnvr/Ped Actn:** 1	**Obj Strk:**										
30	**106420647**	1.427	11/29/2020 19:02	SIDESWIPE, SAME DIRECTION	$ 3500	0	0	0	0	1	5	1	3	0	0	
Unit	**1 :** 4	**Alchl/Drgs:** 0	**Speed:** 45 MPH	**Dir:** W	**Veh Mnvr/Ped Actn:** 5	**Obj Strk:**										
Unit	**2 :** 1	**Alchl/Drgs:** 0	**Speed:** 45 MPH	**Dir:** W	**Veh Mnvr/Ped Actn:** 4	**Obj Strk:**										
31	**106501490**	1.427	02/26/2021 12:45	FIXED OBJECT	$ 28000	0	1	0	1	2	1	3	3	0	0	
Unit	**1 :** 1	**Alchl/Drgs:** 0	**Speed:** 60 MPH	**Dir:** W	**Veh Mnvr/Ped Actn:** 5	**Obj Strk:**										
Unit	**2 :** 1	**Alchl/Drgs:** 0	**Speed:** 45 MPH	**Dir:** E	**Veh Mnvr/Ped Actn:** 4	**Obj Strk:**										
32	**104760111**	1.440	06/07/2016 07:43	SIDESWIPE, SAME DIRECTION	$ 2500	0	0	0	0	1	1	1	1	0	1	1
Unit	**1 :** 4	**Alchl/Drgs:** 7	**Speed:** 0 MPH	**Dir:** W	**Veh Mnvr/Ped Actn:** 6	**Obj Strk:**										
Unit	**2 :** 1	**Alchl/Drgs:** 0	**Speed:** 0 MPH	**Dir:** W	**Veh Mnvr/Ped Actn:** 1	**Obj Strk:**										
33	**105087751**	1.440	04/25/2017 10:23	REAR END, SLOW OR STOP	$ 2000	0	0	0	0	1	1	1	1	0	1	1
Unit	**1 :** 4	**Alchl/Drgs:** 0	**Speed:** 3 MPH	**Dir:** N	**Veh Mnvr/Ped Actn:** 4	**Obj Strk:**										
Unit	**2 :** 1	**Alchl/Drgs:** 0	**Speed:** 0 MPH	**Dir:** N	**Veh Mnvr/Ped Actn:** 1	**Obj Strk:**										
34	**105371522**	1.440	02/02/2018 17:00	LEFT TURN, SAME ROADWAY	$ 12000	0	0	0	0	1	1	1	1	0	0	
Unit	**1 :** 1	**Alchl/Drgs:** 0	**Speed:** 15 MPH	**Dir:** W	**Veh Mnvr/Ped Actn:** 8	**Obj Strk:** 37										
Unit	**2 :** 1	**Alchl/Drgs:** 0	**Speed:** 45 MPH	**Dir:** E	**Veh Mnvr/Ped Actn:** 4	**Obj Strk:**										
35	**105391842**	1.440	02/23/2018 14:03	LEFT TURN, DIFFERENT ROADWAYS	$ 3000	0	0	0	0	1	1	1	1	0	1	1
Unit	**1 :** 2	**Alchl/Drgs:** 0	**Speed:** 15 MPH	**Dir:** N	**Veh Mnvr/Ped Actn:** 8	**Obj Strk:**										
Unit	**2 :** 1	**Alchl/Drgs:** 0	**Speed:** 40 MPH	**Dir:** W	**Veh Mnvr/Ped Actn:** 4	**Obj Strk:**										
36	**105450583**	1.440	04/17/2018 17:25	REAR END, SLOW OR STOP	$ 4500	0	0	0	0	1	1	1	1	0	1	1
Unit	**1 :** 2	**Alchl/Drgs:** 0	**Speed:** 5 MPH	**Dir:** N	**Veh Mnvr/Ped Actn:** 12	**Obj Strk:**										
Unit	**2 :** 4	**Alchl/Drgs:** 0	**Speed:** 0 MPH	**Dir:** N	**Veh Mnvr/Ped Actn:** 1	**Obj Strk:**										

DRAFT

DocuSign Envelope ID: 5C03745C-4B01-4834-A65D-B77F558A4F46

North Carolina Department of Transportation
Traffic Engineering Accident Analysis System
Strip Analysis Report

Acc No	Crash ID	Milepost	Date	Accident Type	Total Damage	Injuries F	A	B	C	Condition R	L	W	Road Ch	Ci	Trfc Ctl Dv	Op
37	**105460598**	1.440	04/26/2018 10:07	REAR END, SLOW OR STOP	$ 1600	0	0	0	0	1	1	2	1	0	1	1
Unit	**1 :** 1	**Alchl/Drgs:** 0	**Speed:** 5 MPH	**Dir:** NE	**Veh Mnvr/Ped Actn:** 4	**Obj Strk:**										
Unit	**2 :** 1	**Alchl/Drgs:** 0	**Speed:** 5 MPH	**Dir:** NE	**Veh Mnvr/Ped Actn:** 1	**Obj Strk:**										
38	**105488769**	1.440	05/22/2018 09:04	REAR END, SLOW OR STOP	$ 1800	0	0	0	0	1	1	1	1	0	1	1
Unit	**1 :** 1	**Alchl/Drgs:** 0	**Speed:** 5 MPH	**Dir:** N	**Veh Mnvr/Ped Actn:** 4	**Obj Strk:**										
Unit	**2 :** 1	**Alchl/Drgs:** 0	**Speed:** 0 MPH	**Dir:** N	**Veh Mnvr/Ped Actn:** 1	**Obj Strk:**										
39	**105559735**	1.440	07/30/2018 07:54	REAR END, SLOW OR STOP	$ 600	0	0	0	0	1	1	1	1	0	1	1
Unit	**1 :** 2	**Alchl/Drgs:** 0	**Speed:** 4 MPH	**Dir:** N	**Veh Mnvr/Ped Actn:** 4	**Obj Strk:**										
Unit	**2 :** 1	**Alchl/Drgs:** 0	**Speed:** 0 MPH	**Dir:** N	**Veh Mnvr/Ped Actn:** 1	**Obj Strk:**										
40	**105777735**	1.440	02/17/2019 11:01	REAR END, SLOW OR STOP	$ 4800	0	0	0	1	1	1	2	1	0	1	1
Unit	**1 :** 4	**Alchl/Drgs:** 0	**Speed:** 10 MPH	**Dir:** N	**Veh Mnvr/Ped Actn:** 4	**Obj Strk:**										
Unit	**2 :** 1	**Alchl/Drgs:** 0	**Speed:** 0 MPH	**Dir:** N	**Veh Mnvr/Ped Actn:** 1	**Obj Strk:**										
41	**105804442**	1.440	03/15/2019 11:09	REAR END, SLOW OR STOP	$ 1100	0	0	0	0	2	1	3	1	0	1	1
Unit	**1 :** 1	**Alchl/Drgs:** 0	**Speed:** 5 MPH	**Dir:** N	**Veh Mnvr/Ped Actn:** 4	**Obj Strk:**										
Unit	**2 :** 3	**Alchl/Drgs:** 0	**Speed:** 0 MPH	**Dir:** N	**Veh Mnvr/Ped Actn:** 1	**Obj Strk:**										
42	**105822207**	1.440	04/03/2019 16:39	REAR END, SLOW OR STOP	$ 1500	0	0	0	0	1	1	1	1	0	1	1
Unit	**1 :** 4	**Alchl/Drgs:** 0	**Speed:** 0 MPH	**Dir:** N	**Veh Mnvr/Ped Actn:** 4	**Obj Strk:**										
Unit	**2 :** 4	**Alchl/Drgs:** 0	**Speed:** 0 MPH	**Dir:** N	**Veh Mnvr/Ped Actn:** 1	**Obj Strk:**										
43	**105844972**	1.440	04/27/2019 13:48	REAR END, SLOW OR STOP	$ 4500	0	0	0	0	1	1	1	5	0	0	
Unit	**1 :** 4	**Alchl/Drgs:** 0	**Speed:** 10 MPH	**Dir:** W	**Veh Mnvr/Ped Actn:** 4	**Obj Strk:**										
Unit	**2 :** 1	**Alchl/Drgs:** 0	**Speed:** 10 MPH	**Dir:** W	**Veh Mnvr/Ped Actn:** 1	**Obj Strk:**										
44	**105893938**	1.440	06/06/2019 07:41	REAR END, SLOW OR STOP	$ 800	0	0	0	0	1	1	2	5	0	1	1
Unit	**1 :** 1	**Alchl/Drgs:** 0	**Speed:** 0 MPH	**Dir:** N	**Veh Mnvr/Ped Actn:** 12	**Obj Strk:**										
Unit	**2 :** 1	**Alchl/Drgs:** 0	**Speed:** 0 MPH	**Dir:** N	**Veh Mnvr/Ped Actn:** 1	**Obj Strk:**										
45	**105992676**	1.440	09/17/2019 07:37	REAR END, SLOW OR STOP	$ 1100	0	0	0	0	1	1	1	1	0	1	1
Unit	**1 :** 1	**Alchl/Drgs:** 0	**Speed:** 5 MPH	**Dir:** N	**Veh Mnvr/Ped Actn:** 4	**Obj Strk:**										
Unit	**2 :** 1	**Alchl/Drgs:** 0	**Speed:** 0 MPH	**Dir:** N	**Veh Mnvr/Ped Actn:** 1	**Obj Strk:**										

DRAFT

DocuSign Envelope ID: 5C03745C-4B01-4834-A65D-B77F558A4F46

North Carolina Department of Transportation
Traffic Engineering Accident Analysis System
Strip Analysis Report

Acc No	Crash ID	Milepost	Date	Accident Type	Total Damage	Injuries F	A	B	C	Condition R	L	W	Road Ch	Ci	Trfc Ctl Dv	Op
46	**106001764**	1.440	09/25/2019 07:17	REAR END, SLOW OR STOP	$ 2000	0	0	0	0	1	1	1	1	0	1	1
Unit	**1 :** 4	**Alchl/Drgs:**	0	**Speed:** 35 MPH	**Dir:** N	**Veh Mnvr/Ped Actn:**			4			**Obj Strk:**				
Unit	**2 :** 4	**Alchl/Drgs:**	0	**Speed:** 35 MPH	**Dir:** N	**Veh Mnvr/Ped Actn:**			1			**Obj Strk:**				
47	**106030325**	1.440	10/19/2019 16:30	LEFT TURN, DIFFERENT ROADWAYS	$ 4300	0	0	0	0	2	1	3	1	0	1	1
Unit	**1 :** 4	**Alchl/Drgs:**	0	**Speed:** 15 MPH	**Dir:** N	**Veh Mnvr/Ped Actn:**			8			**Obj Strk:**				
Unit	**2 :** 2	**Alchl/Drgs:**	0	**Speed:** 35 MPH	**Dir:** W	**Veh Mnvr/Ped Actn:**			4			**Obj Strk:**				
48	**106035761**	1.440	10/23/2019 16:20	LEFT TURN, SAME ROADWAY	$ 19500	0	1	1	2	1	1	1	3	0	0	
Unit	**1 :** 1	**Alchl/Drgs:**	0	**Speed:** 40 MPH	**Dir:** E	**Veh Mnvr/Ped Actn:**			4			**Obj Strk:**				
Unit	**2 :** 1	**Alchl/Drgs:**	0	**Speed:** 30 MPH	**Dir:** W	**Veh Mnvr/Ped Actn:**			8			**Obj Strk:**	64			
49	**106102482**	1.440	12/20/2019 07:40	REAR END, SLOW OR STOP	$ 4200	0	0	0	0	1	1	1	1	0	1	1
Unit	**1 :** 1	**Alchl/Drgs:**	0	**Speed:** 10 MPH	**Dir:** N	**Veh Mnvr/Ped Actn:**			4			**Obj Strk:**				
Unit	**2 :** 2	**Alchl/Drgs:**	0	**Speed:** 10 MPH	**Dir:** N	**Veh Mnvr/Ped Actn:**			1			**Obj Strk:**				
50	**106174513**	1.440	02/29/2020 13:55	REAR END, SLOW OR STOP	$ 2600	0	0	0	0	1	1	1	3	0	0	
Unit	**1 :** 4	**Alchl/Drgs:**	0	**Speed:** 30 MPH	**Dir:** W	**Veh Mnvr/Ped Actn:**			4			**Obj Strk:**				
Unit	**2 :** 4	**Alchl/Drgs:**	0	**Speed:** 0 MPH	**Dir:** W	**Veh Mnvr/Ped Actn:**			1			**Obj Strk:**				
51	**106209413**	1.440	04/23/2020 15:28	REAR END, SLOW OR STOP	$ 1800	0	0	0	0	2	1	3	5	0	2	1
Unit	**1 :** 1	**Alchl/Drgs:**	0	**Speed:** 10 MPH	**Dir:** W	**Veh Mnvr/Ped Actn:**			4			**Obj Strk:**				
Unit	**2 :** 1	**Alchl/Drgs:**	0	**Speed:** 10 MPH	**Dir:** W	**Veh Mnvr/Ped Actn:**			1			**Obj Strk:**				
52	**106306062**	1.440	08/13/2020 13:13	REAR END, SLOW OR STOP	$ 900	0	0	0	0	1	1	1	5	0	0	
Unit	**1 :** 5	**Alchl/Drgs:**	0	**Speed:** 10 MPH	**Dir:** W	**Veh Mnvr/Ped Actn:**			4			**Obj Strk:**				
Unit	**2 :** 1	**Alchl/Drgs:**	0	**Speed:** 10 MPH	**Dir:** W	**Veh Mnvr/Ped Actn:**			1			**Obj Strk:**				
53	**106320859**	1.440	08/28/2020 13:47	REAR END, SLOW OR STOP	$ 1000	0	0	0	0	1	1	1	1	0	3	1
Unit	**1 :** 5	**Alchl/Drgs:**	0	**Speed:** 0 MPH	**Dir:** W	**Veh Mnvr/Ped Actn:**			11			**Obj Strk:**				
Unit	**2 :** 4	**Alchl/Drgs:**	0	**Speed:** 15 MPH	**Dir:** W	**Veh Mnvr/Ped Actn:**			4			**Obj Strk:**				
54	**106427743**	1.440	11/16/2020 13:43	REAR END, SLOW OR STOP	$ 2800	0	0	0	0	1	1	1	3	0	1	1
Unit	**1 :** 4	**Alchl/Drgs:**	0	**Speed:** 35 MPH	**Dir:** N	**Veh Mnvr/Ped Actn:**			4			**Obj Strk:**				
Unit	**2 :** 2	**Alchl/Drgs:**	0	**Speed:** 35 MPH	**Dir:** N	**Veh Mnvr/Ped Actn:**			1			**Obj Strk:**				

DRAFT

DocuSign Envelope ID: 5C03745C-4B01-4834-A65D-B77F558A4F46

North Carolina Department of Transportation
Traffic Engineering Accident Analysis System
Strip Analysis Report

Acc No	Crash ID	Milepost	Date	Accident Type	Total Damage	Injuries F	A	B	C	Condition R	L	W	Road Ch	Ci	Trfc Ctl Dv	Op
55	**106418082**	1.440	11/25/2020 12:58	REAR END, SLOW OR STOP	$ 1000	0	0	0	0	2	1	2	1	0	1	1
Unit	**1 :** 1	**Alchl/Drgs:** 0	**Speed:** 10 MPH	**Dir:** N	**Veh Mnvr/Ped Actn:** 11	**Obj Strk:**										
Unit	**2 :** 4	**Alchl/Drgs:** 0	**Speed:** 0 MPH	**Dir:** N	**Veh Mnvr/Ped Actn:** 1	**Obj Strk:**										
56	**106436592**	1.440	12/15/2020 07:53	LEFT TURN, DIFFERENT ROADWAYS	$ 4000	0	0	0	0	1	1	1	1	0	1	1
Unit	**1 :** 14	**Alchl/Drgs:** 0	**Speed:** 35 MPH	**Dir:** W	**Veh Mnvr/Ped Actn:** 4	**Obj Strk:**										
Unit	**2 :** 1	**Alchl/Drgs:** 0	**Speed:** 10 MPH	**Dir:** N	**Veh Mnvr/Ped Actn:** 8	**Obj Strk:**										
57	**106440840**	1.440	12/18/2020 20:20	REAR END, SLOW OR STOP	$ 3500	0	0	0	0	1	5	1	5	0	1	1
Unit	**1 :** 4	**Alchl/Drgs:** 0	**Speed:** 10 MPH	**Dir:** N	**Veh Mnvr/Ped Actn:** 4	**Obj Strk:**										
Unit	**2 :** 1	**Alchl/Drgs:** 0	**Speed:** 0 MPH	**Dir:** N	**Veh Mnvr/Ped Actn:** 1	**Obj Strk:**										
58	**106469794**	1.440	01/21/2021 11:50	REAR END, SLOW OR STOP	$ 2200	0	0	0	0	2	1	2	1	0	1	1
Unit	**1 :** 4	**Alchl/Drgs:** 0	**Speed:** 5 MPH	**Dir:** N	**Veh Mnvr/Ped Actn:** 4	**Obj Strk:**										
Unit	**2 :** 4	**Alchl/Drgs:** 0	**Speed:** 0 MPH	**Dir:** N	**Veh Mnvr/Ped Actn:** 1	**Obj Strk:**										
59	**105963437**	1.443	08/19/2019 11:40	REAR END, SLOW OR STOP	$ 2100	0	0	0	1	1	1	1	1	0	0	
Unit	**1 :** 1	**Alchl/Drgs:** 0	**Speed:** 40 MPH	**Dir:** W	**Veh Mnvr/Ped Actn:** 4	**Obj Strk:**										
Unit	**2 :** 1	**Alchl/Drgs:** 0	**Speed:** 0 MPH	**Dir:** W	**Veh Mnvr/Ped Actn:** 1	**Obj Strk:**										
60	**105391714**	1.444	02/23/2018 08:17	REAR END, SLOW OR STOP	$ 2750	0	0	0	0	1	1	2	1	0	0	
Unit	**1 :** 4	**Alchl/Drgs:** 0	**Speed:** 25 MPH	**Dir:** E	**Veh Mnvr/Ped Actn:** 4	**Obj Strk:**										
Unit	**2 :** 1	**Alchl/Drgs:** 0	**Speed:** 20 MPH	**Dir:** E	**Veh Mnvr/Ped Actn:** 1	**Obj Strk:**										
61	**105222532**	1.459	09/15/2017 17:36	SIDESWIPE, SAME DIRECTION	$ 5500	0	0	0	0	1	1	1	1	0	0	
Unit	**1 :** 2	**Alchl/Drgs:** 0	**Speed:** 55 MPH	**Dir:** W	**Veh Mnvr/Ped Actn:** 5	**Obj Strk:**										
Unit	**2 :** 1	**Alchl/Drgs:** 0	**Speed:** 45 MPH	**Dir:** W	**Veh Mnvr/Ped Actn:** 4	**Obj Strk:**										
62	**106196829**	1.459	03/25/2020 17:21	SIDESWIPE, SAME DIRECTION	$ 7500	0	0	0	0	1	1	1	1	0	0	
Unit	**1 :** 4	**Alchl/Drgs:** 0	**Speed:** 35 MPH	**Dir:** W	**Veh Mnvr/Ped Actn:** 5	**Obj Strk:**										
Unit	**2 :** 1	**Alchl/Drgs:** 0	**Speed:** 35 MPH	**Dir:** W	**Veh Mnvr/Ped Actn:** 4	**Obj Strk:**										
63	**106059871**	1.497	10/31/2019 15:35	REAR END, SLOW OR STOP	$ 1500	0	0	0	0	2	1	3	1	0	3	1
Unit	**1 :** 1	**Alchl/Drgs:** 0	**Speed:** 10 MPH	**Dir:** E	**Veh Mnvr/Ped Actn:** 4	**Obj Strk:**										
Unit	**2 :** 1	**Alchl/Drgs:** 0	**Speed:** 0 MPH	**Dir:** E	**Veh Mnvr/Ped Actn:** 1	**Obj Strk:**										

DRAFT

DocuSign Envelope ID: 5C03745C-4B01-4834-A65D-B77F558A4F46

North Carolina Department of Transportation
Traffic Engineering Accident Analysis System
Strip Analysis Report

Acc No	Crash ID	Milepost	Date	Accident Type	Total Damage	Injuries F	A	B	C	Condition R	L	W	Road Ch	Ci	Trfc Ctl Dv	Op
64	**104725761**	1.527	05/05/2016 07:17	REAR END, SLOW OR STOP	$ 600	0	0	0	2	1	1	1	1	0	3	1
Unit	**1 :** 1	**Alchl/Drgs:** 0	**Speed:** 45 MPH	**Dir:** E	**Veh Mnvr/Ped Actn:** 4	**Obj Strk:**										
Unit	**2 :** 1	**Alchl/Drgs:** 0	**Speed:** 0 MPH	**Dir:** E	**Veh Mnvr/Ped Actn:** 1	**Obj Strk:**										
65	**104926337**	1.527	11/26/2016 03:28	ANIMAL	$ 1500	0	0	0	0	1	5	1	3	0	0	
Unit	**1 :** 2	**Alchl/Drgs:** 0	**Speed:** 35 MPH	**Dir:** W	**Veh Mnvr/Ped Actn:** 4	**Obj Strk:** 17										
66	**105299278**	1.527	11/22/2017 15:03	SIDESWIPE, SAME DIRECTION	$ 7000	0	0	0	0	1	1	1	1	0	3	1
Unit	**1 :** 1	**Alchl/Drgs:** 0	**Speed:** 15 MPH	**Dir:** W	**Veh Mnvr/Ped Actn:** 5	**Obj Strk:**										
Unit	**2 :** 10	**Alchl/Drgs:** 0	**Speed:** 20 MPH	**Dir:** W	**Veh Mnvr/Ped Actn:** 4	**Obj Strk:**										
67	**105517372**	1.527	06/19/2018 02:17	FIXED OBJECT	$ 15000	0	0	0	0	1	5	1	1	0	0	
Unit	**1 :** 2	**Alchl/Drgs:** 7	**Speed:** 45 MPH	**Dir:** W	**Veh Mnvr/Ped Actn:** 4	**Obj Strk:** 50										
68	**105714903**	1.527	12/18/2018 17:35	REAR END, SLOW OR STOP	$ 3000	0	0	0	0	1	2	1	3	0	0	
Unit	**1 :** 1	**Alchl/Drgs:** 0	**Speed:** 30 MPH	**Dir:** S	**Veh Mnvr/Ped Actn:** 4	**Obj Strk:**										
Unit	**2 :** 1	**Alchl/Drgs:** 0	**Speed:** 35 MPH	**Dir:** S	**Veh Mnvr/Ped Actn:** 11	**Obj Strk:**										
69	**106174660**	1.527	03/01/2020 15:01	SIDESWIPE, SAME DIRECTION	$ 1300	0	0	0	0	1	1	1	1	0	0	
Unit	**1 :** 1	**Alchl/Drgs:** 0	**Speed:** 30 MPH	**Dir:** W	**Veh Mnvr/Ped Actn:** 5	**Obj Strk:**										
Unit	**2 :** 3	**Alchl/Drgs:** 0	**Speed:** 40 MPH	**Dir:** W	**Veh Mnvr/Ped Actn:** 6	**Obj Strk:**										
70	**106183331**	1.527	03/12/2020 09:58	SIDESWIPE, SAME DIRECTION	$ 5000	0	0	0	0	1	1	1	1	0	0	
Unit	**1 :** 5	**Alchl/Drgs:** 0	**Speed:** 30 MPH	**Dir:** W	**Veh Mnvr/Ped Actn:** 5	**Obj Strk:**										
Unit	**2 :** 2	**Alchl/Drgs:** 0	**Speed:** 45 MPH	**Dir:** W	**Veh Mnvr/Ped Actn:** 4	**Obj Strk:**										
71	**106218128**	1.527	05/04/2020 08:54	SIDESWIPE, SAME DIRECTION	$ 3000	0	0	0	0	1	1	1	1	0	0	
Unit	**1 :** 5	**Alchl/Drgs:** 0	**Speed:** 15 MPH	**Dir:** E	**Veh Mnvr/Ped Actn:** 5	**Obj Strk:**										
Unit	**2 :** 1	**Alchl/Drgs:** 0	**Speed:** 45 MPH	**Dir:** E	**Veh Mnvr/Ped Actn:** 4	**Obj Strk:**										
72	**106432377**	1.527	12/09/2020 13:29	SIDESWIPE, SAME DIRECTION	$ 2000	0	0	0	0	1	1	1	3	0	0	
Unit	**1 :** 2	**Alchl/Drgs:** 0	**Speed:** 45 MPH	**Dir:** W	**Veh Mnvr/Ped Actn:** 4	**Obj Strk:**										
Unit	**2 :** 11	**Alchl/Drgs:** 0	**Speed:** 35 MPH	**Dir:** W	**Veh Mnvr/Ped Actn:** 4	**Obj Strk:**										
73	**104920268**	1.589	11/19/2016 16:55	REAR END, SLOW OR STOP	$ 2000	0	0	0	0	1	1	1	1	0	3	1
Unit	**1 :** 1	**Alchl/Drgs:** 0	**Speed:** 35 MPH	**Dir:** N	**Veh Mnvr/Ped Actn:** 4	**Obj Strk:**										

DRAFT

DocuSign Envelope ID: 5C03745C-4B01-4834-A65D-B77F558A4F46

North Carolina Department of Transportation
Traffic Engineering Accident Analysis System
Strip Analysis Report

Acc No	Crash ID	Milepost	Date	Accident Type	Total Damage	Injuries F	A	B	C	Condition R	L	W	Road Ch	Ci	Trfc Ctl Dv	Op
Unit	**2 :** 1	**Alchl/Drgs:**	0	**Speed:** 0 MPH	**Dir:** N	**Veh Mnvr/Ped Actn:**				1			**Obj Strk:**			
74	**105172063**	1.589	07/24/2017 18:34	BACKING UP	$ 150	0	0	0	0	1	1	1	3	0	13	1
Unit	**1 :** 4	**Alchl/Drgs:**	0	**Speed:** 5 MPH	**Dir:** W	**Veh Mnvr/Ped Actn:**				10			**Obj Strk:**			
Unit	**2 :** 1	**Alchl/Drgs:**	0	**Speed:** 0 MPH	**Dir:** E	**Veh Mnvr/Ped Actn:**				1			**Obj Strk:**			
75	**105725457**	1.589	12/29/2018 15:12	REAR END, SLOW OR STOP	$ 11300	0	0	0	1	1	1	1	1	0	3	1
Unit	**1 :** 1	**Alchl/Drgs:**	0	**Speed:** 40 MPH	**Dir:** E	**Veh Mnvr/Ped Actn:**				4			**Obj Strk:**			
Unit	**2 :** 4	**Alchl/Drgs:**	0	**Speed:** 0 MPH	**Dir:** E	**Veh Mnvr/Ped Actn:**				1			**Obj Strk:**			
Unit	**3 :** 1	**Alchl/Drgs:**	0	**Speed:** 0 MPH	**Dir:** E	**Veh Mnvr/Ped Actn:**				1			**Obj Strk:**			
76	**106466190**	1.589	12/17/2020 13:51	SIDESWIPE, SAME DIRECTION	$ 4500	0	0	0	0	1	1	2	3	0	0	2
Unit	**1 :** 4	**Alchl/Drgs:**	0	**Speed:** 20 MPH	**Dir:** SE	**Veh Mnvr/Ped Actn:**				5			**Obj Strk:**			
Unit	**2 :** 4	**Alchl/Drgs:**	0	**Speed:** 45 MPH	**Dir:** SE	**Veh Mnvr/Ped Actn:**				4			**Obj Strk:**			
77	**104705823**	1.600	04/12/2016 13:19	RIGHT TURN, DIFFERENT ROADWAYS	$ 10000	0	0	0	0	1	1	1	1	0	2	1
Unit	**1 :** 14	**Alchl/Drgs:**	0	**Speed:** 10 MPH	**Dir:** W	**Veh Mnvr/Ped Actn:**				7			**Obj Strk:**			
Unit	**2 :** 14	**Alchl/Drgs:**	0	**Speed:** 35 MPH	**Dir:** W	**Veh Mnvr/Ped Actn:**				4			**Obj Strk:**			
78	**104799030**	1.600	07/21/2016 12:53	REAR END, SLOW OR STOP	$ 4300	0	0	0	0	1	1	1	3	0	3	1
Unit	**1 :** 1	**Alchl/Drgs:**	0	**Speed:** 15 MPH	**Dir:** S	**Veh Mnvr/Ped Actn:**				11			**Obj Strk:**			
Unit	**2 :** 1	**Alchl/Drgs:**	0	**Speed:** 0 MPH	**Dir:** S	**Veh Mnvr/Ped Actn:**				1			**Obj Strk:**			
79	**104823960**	1.600	08/17/2016 16:03	RIGHT TURN, DIFFERENT ROADWAYS	$ 4500	0	0	0	0	1	1	1	1	0	2	1
Unit	**1 :** 4	**Alchl/Drgs:**	0	**Speed:** 15 MPH	**Dir:** W	**Veh Mnvr/Ped Actn:**				7			**Obj Strk:**			
Unit	**2 :** 4	**Alchl/Drgs:**	0	**Speed:** 35 MPH	**Dir:** W	**Veh Mnvr/Ped Actn:**				4			**Obj Strk:**			
80	**104866435**	1.600	10/02/2016 08:59	RIGHT TURN, DIFFERENT ROADWAYS	$ 9500	0	0	0	0	1	1	1	3	0	2	1
Unit	**1 :** 1	**Alchl/Drgs:**	0	**Speed:** 0 MPH	**Dir:** E	**Veh Mnvr/Ped Actn:**				7			**Obj Strk:**			
Unit	**2 :** 5	**Alchl/Drgs:**	0	**Speed:** 40 MPH	**Dir:** S	**Veh Mnvr/Ped Actn:**				4			**Obj Strk:**			
81	**104881048**	1.600	10/14/2016 19:43	REAR END, TURN	$ 1100	0	0	0	0	1	1	1	3	0	1	1
Unit	**1 :** 1	**Alchl/Drgs:**	0	**Speed:** 5 MPH	**Dir:** S	**Veh Mnvr/Ped Actn:**				7			**Obj Strk:**			
Unit	**2 :** 4	**Alchl/Drgs:**	0	**Speed:** 5 MPH	**Dir:** S	**Veh Mnvr/Ped Actn:**				11			**Obj Strk:**			
82	**104987913**	1.600	01/25/2017 16:59	REAR END, SLOW OR STOP	$ 2000	0	0	0	0	1	1	1	7	0	2	1
Unit	**1 :** 4	**Alchl/Drgs:**	0	**Speed:** 35 MPH	**Dir:** E	**Veh Mnvr/Ped Actn:**				4			**Obj Strk:**			

DRAFT

DocuSign Envelope ID: 5C03745C-4B01-4834-A65D-B77F558A4F46

North Carolina Department of Transportation
Traffic Engineering Accident Analysis System
Strip Analysis Report

Acc No	Crash ID	Milepost	Date	Accident Type	Total Damage	Injuries F	A	B	C	Condition R	L	W	Road Ch	Ci	Trfc Ctl Dv	Op
Unit	**2 :** 1	**Alchl/Drgs:**	0	**Speed:** 35 MPH	**Dir:** E	**Veh Mnvr/Ped Actn:**				1			**Obj Strk:**			
83	**105004942**	1.600	02/09/2017 16:37	RIGHT TURN, DIFFERENT ROADWAYS	$ 1000	0	0	0	0	1	1	1	1	0	2	1
Unit	**1 :** 5	**Alchl/Drgs:**	0	**Speed:** 0 MPH	**Dir:** W	**Veh Mnvr/Ped Actn:**				7			**Obj Strk:**			
Unit	**2 :** 2	**Alchl/Drgs:**	0	**Speed:** 35 MPH	**Dir:** W	**Veh Mnvr/Ped Actn:**				4			**Obj Strk:**			
84	**105126214**	1.600	06/05/2017 11:29	RIGHT TURN, DIFFERENT ROADWAYS	$ 26500	0	0	0	0	1	1	2	3	0	2	1
Unit	**1 :** 14	**Alchl/Drgs:**	0	**Speed:** 0 MPH	**Dir:** SW	**Veh Mnvr/Ped Actn:**				8			**Obj Strk:**			
Unit	**2 :** 2	**Alchl/Drgs:**	0	**Speed:** 20 MPH	**Dir:** S	**Veh Mnvr/Ped Actn:**				4			**Obj Strk:**			
85	**105443702**	1.600	04/12/2018 07:07	RIGHT TURN, DIFFERENT ROADWAYS	$ 2300	0	0	0	0	1	1	1	1	0	3	1
Unit	**1 :** 2	**Alchl/Drgs:**	0	**Speed:** 20 MPH	**Dir:** W	**Veh Mnvr/Ped Actn:**				7			**Obj Strk:**			
Unit	**2 :** 1	**Alchl/Drgs:**	0	**Speed:** 40 MPH	**Dir:** W	**Veh Mnvr/Ped Actn:**				4			**Obj Strk:**			
86	**105484774**	1.600	05/18/2018 09:15	REAR END, SLOW OR STOP	$ 900	0	0	0	0	2	1	2	3	0	2	1
Unit	**1 :** 1	**Alchl/Drgs:**	0	**Speed:** 2 MPH	**Dir:** E	**Veh Mnvr/Ped Actn:**				4			**Obj Strk:**			
Unit	**2 :** 1	**Alchl/Drgs:**	0	**Speed:** 0 MPH	**Dir:** E	**Veh Mnvr/Ped Actn:**				1			**Obj Strk:**			
87	**105512365**	1.600	06/13/2018 18:16	RIGHT TURN, DIFFERENT ROADWAYS	$ 1100	0	0	0	0	1	1	1	3	0	2	1
Unit	**1 :** 2	**Alchl/Drgs:**	0	**Speed:** 25 MPH	**Dir:** W	**Veh Mnvr/Ped Actn:**				4			**Obj Strk:**			
Unit	**2 :** 14	**Alchl/Drgs:**	0	**Speed:** 15 MPH	**Dir:** E	**Veh Mnvr/Ped Actn:**				7			**Obj Strk:**			
88	**105676685**	1.600	11/16/2018 08:08	RIGHT TURN, DIFFERENT ROADWAYS	$ 4500	0	0	0	0	1	1	1	3	0	2	1
Unit	**1 :** 5	**Alchl/Drgs:**	0	**Speed:** 25 MPH	**Dir:** W	**Veh Mnvr/Ped Actn:**				4			**Obj Strk:**			
Unit	**2 :** 1	**Alchl/Drgs:**	0	**Speed:** 40 MPH	**Dir:** S	**Veh Mnvr/Ped Actn:**				7			**Obj Strk:**			
89	**105756834**	1.600	01/28/2019 09:00	REAR END, SLOW OR STOP	$ 5500	0	0	0	0	1	1	1	3	0	2	1
Unit	**1 :** 1	**Alchl/Drgs:**	0	**Speed:** 25 MPH	**Dir:** S	**Veh Mnvr/Ped Actn:**				4			**Obj Strk:**			
Unit	**2 :** 1	**Alchl/Drgs:**	0	**Speed:** 0 MPH	**Dir:** S	**Veh Mnvr/Ped Actn:**				1			**Obj Strk:**			
90	**105796843**	1.600	03/07/2019 15:59	SIDESWIPE, SAME DIRECTION	$ 3000	0	0	0	0	1	1	1	1	0	2	1
Unit	**1 :** 4	**Alchl/Drgs:**	0	**Speed:** 25 MPH	**Dir:** W	**Veh Mnvr/Ped Actn:**				5			**Obj Strk:**			
Unit	**2 :** 4	**Alchl/Drgs:**	0	**Speed:** 45 MPH	**Dir:** W	**Veh Mnvr/Ped Actn:**				4			**Obj Strk:**			
91	**105901332**	1.600	06/12/2019 09:18	RIGHT TURN, DIFFERENT ROADWAYS	$ 3100	0	0	0	0	1	1	1	3	0	2	1
Unit	**1 :** 10	**Alchl/Drgs:**	7	**Speed:** 20 MPH	**Dir:** S	**Veh Mnvr/Ped Actn:**				7			**Obj Strk:**			
Unit	**2 :** 1	**Alchl/Drgs:**	0	**Speed:** 35 MPH	**Dir:** W	**Veh Mnvr/Ped Actn:**				4			**Obj Strk:**			

DRAFT

DocuSign Envelope ID: 5C03745C-4B01-4834-A65D-B77F558A4F46

North Carolina Department of Transportation
Traffic Engineering Accident Analysis System
Strip Analysis Report

Acc No	Crash ID	Milepost	Date	Accident Type	Total Damage	Injuries F	A	B	C	Condition R	L	W	Road Ch	Ci	Trfc Ctl Dv	Op
92	**105945677**	1.600	08/03/2019 09:21	REAR END, SLOW OR STOP	$ 1300	0	0	0	0	1	1	1	3	0	2	1
Unit	**1 :** 2	**Alchl/Drgs:**	0	**Speed:** 60 MPH	**Dir:** S	**Veh Mnvr/Ped Actn:**			4		**Obj Strk:**					
Unit	**2 :** 4	**Alchl/Drgs:**	0	**Speed:** 60 MPH	**Dir:** S	**Veh Mnvr/Ped Actn:**			1		**Obj Strk:**					
93	**105957474**	1.600	08/12/2019 15:57	RIGHT TURN, DIFFERENT ROADWAYS	$ 1600	0	0	0	0	1	1	1	7	0	2	1
Unit	**1 :** 1	**Alchl/Drgs:**	0	**Speed:** 10 MPH	**Dir:** SE	**Veh Mnvr/Ped Actn:**			7		**Obj Strk:**					
Unit	**2 :** 1	**Alchl/Drgs:**	0	**Speed:** 35 MPH	**Dir:** S	**Veh Mnvr/Ped Actn:**			4		**Obj Strk:**					
94	**106005107**	1.600	09/26/2019 20:14	LEFT TURN, SAME ROADWAY	$ 11000	0	0	1	1	1	5	1	1	0	3	1
Unit	**1 :** 1	**Alchl/Drgs:**	0	**Speed:** 40 MPH	**Dir:** N	**Veh Mnvr/Ped Actn:**			4		**Obj Strk:**					
Unit	**2 :** 1	**Alchl/Drgs:**	0	**Speed:** 25 MPH	**Dir:** SE	**Veh Mnvr/Ped Actn:**			8		**Obj Strk:**					
95	**106028521**	1.600	10/17/2019 07:04	REAR END, SLOW OR STOP	$ 1900	0	0	0	0	1	3	1	3	0	2	1
Unit	**1 :** 1	**Alchl/Drgs:**	0	**Speed:** 55 MPH	**Dir:** S	**Veh Mnvr/Ped Actn:**			4		**Obj Strk:**					
Unit	**2 :** 2	**Alchl/Drgs:**	0	**Speed:** 55 MPH	**Dir:** S	**Veh Mnvr/Ped Actn:**			1		**Obj Strk:**					
96	**106243525**	1.600	06/04/2020 15:38	REAR END, TURN	$ 800	0	0	0	0	1	1	2	7	0	2	1
Unit	**1 :** 1	**Alchl/Drgs:**	0	**Speed:** 10 MPH	**Dir:** S	**Veh Mnvr/Ped Actn:**			4		**Obj Strk:**					
Unit	**2 :** 1	**Alchl/Drgs:**	0	**Speed:** 0 MPH	**Dir:** S	**Veh Mnvr/Ped Actn:**			1		**Obj Strk:**					
97	**106314004**	1.600	08/18/2020 17:11	REAR END, SLOW OR STOP	$ 2000	0	0	0	0	1	1	1	3	0	2	1
Unit	**1 :** 1	**Alchl/Drgs:**	0	**Speed:** 20 MPH	**Dir:** E	**Veh Mnvr/Ped Actn:**			4		**Obj Strk:**					
Unit	**2 :** 1	**Alchl/Drgs:**	0	**Speed:** 0 MPH	**Dir:** E	**Veh Mnvr/Ped Actn:**			1		**Obj Strk:**					
98	**105098102**	1.608	05/10/2017 14:18	REAR END, SLOW OR STOP	$ 23000	0	0	0	0	1	1	1	1	0	3	1
Unit	**1 :** 4	**Alchl/Drgs:**	1	**Speed:** 45 MPH	**Dir:** E	**Veh Mnvr/Ped Actn:**			4		**Obj Strk:**					
Unit	**2 :** 4	**Alchl/Drgs:**	0	**Speed:** 45 MPH	**Dir:** E	**Veh Mnvr/Ped Actn:**			1		**Obj Strk:**					
Unit	**3 :** 4	**Alchl/Drgs:**	0	**Speed:** 45 MPH	**Dir:** E	**Veh Mnvr/Ped Actn:**			1		**Obj Strk:**					
99	**106020177**	1.613	10/09/2019 11:40	FIXED OBJECT	$ 16000	0	0	1	0	1	1	2	1	0	0	
Unit	**1 :** 4	**Alchl/Drgs:**	0	**Speed:** 60 MPH	**Dir:** E	**Veh Mnvr/Ped Actn:**			4		**Obj Strk:**		50			
100	**105506096**	1.618	06/10/2018 10:29	SIDESWIPE, SAME DIRECTION	$ 3200	0	0	0	0	1	1	1	1	0	3	1
Unit	**1 :** 4	**Alchl/Drgs:**	0	**Speed:** 20 MPH	**Dir:** E	**Veh Mnvr/Ped Actn:**			8		**Obj Strk:**					
Unit	**2 :** 1	**Alchl/Drgs:**	0	**Speed:** 35 MPH	**Dir:** E	**Veh Mnvr/Ped Actn:**			8		**Obj Strk:**					

DRAFT

DocuSign Envelope ID: 5C03745C-4B01-4834-A65D-B77F558A4F46

North Carolina Department of Transportation
Traffic Engineering Accident Analysis System
Strip Analysis Report

Acc No	Crash ID	Milepost	Date	Accident Type	Total Damage	Injuries F	A	B	C	Condition R	L	W	Road Ch	Ci	Trfc Ctl Dv	Op
101	**106132408**	1.618	12/15/2019 13:02	REAR END, SLOW OR STOP	$ 2000	0	0	0	0	1	1	1	1	0	0	2
Unit 1 : 4	**Alchl/Drgs:** 0	**Speed:** 40 MPH	**Dir:** E	**Veh Mnvr/Ped Actn:** 4	**Obj Strk:**											
Unit 2 : 1	**Alchl/Drgs:** 0	**Speed:** 35 MPH	**Dir:** E	**Veh Mnvr/Ped Actn:** 4	**Obj Strk:**											
102	**106502040**	1.618	03/01/2021 08:04	HEAD ON	$ 10000	0	0	0	0	2	1	1	5	0	3	1
Unit 1 : 1	**Alchl/Drgs:** 7	**Speed:** 40 MPH	**Dir:** S	**Veh Mnvr/Ped Actn:** 8	**Obj Strk:**											
Unit 2 : 4	**Alchl/Drgs:** 0	**Speed:** 40 MPH	**Dir:** N	**Veh Mnvr/Ped Actn:** 4	**Obj Strk:**											
103	**105181580**	1.619	08/05/2017 09:24	OTHER COLLISION WITH VEHICLE	$ 7900	0	0	0	0	1	1	1	3	0	3	1
Unit 1 : 2	**Alchl/Drgs:** 0	**Speed:** 0 MPH	**Dir:** N	**Veh Mnvr/Ped Actn:** 12	**Obj Strk:**											
Unit 2 : 4	**Alchl/Drgs:** 0	**Speed:** 0 MPH	**Dir:** N	**Veh Mnvr/Ped Actn:** 1	**Obj Strk:**											
104	**105043612**	1.623	03/20/2017 12:09	SIDESWIPE, SAME DIRECTION	$ 4500	0	0	0	0	1	1	1	5	0	3	1
Unit 1 : 1	**Alchl/Drgs:** 0	**Speed:** 25 MPH	**Dir:** S	**Veh Mnvr/Ped Actn:** 5	**Obj Strk:**											
Unit 2 : 1	**Alchl/Drgs:** 0	**Speed:** 20 MPH	**Dir:** S	**Veh Mnvr/Ped Actn:** 4	**Obj Strk:**											
105	**106402751**	1.625	11/13/2020 04:52	FIXED OBJECT	$ 6000	0	0	0	0	1	5	1	5	0	3	1
Unit 1 : 4	**Alchl/Drgs:** 0	**Speed:** 35 MPH	**Dir:** N	**Veh Mnvr/Ped Actn:** 4	**Obj Strk:** 64											
106	**104701102**	1.627	04/11/2016 11:19	LEFT TURN, SAME ROADWAY	$ 2500	0	0	0	0	1	1	1	1	0	3	1
Unit 1 : 14	**Alchl/Drgs:** 0	**Speed:** 0 MPH	**Dir:** W	**Veh Mnvr/Ped Actn:** 8	**Obj Strk:**											
Unit 2 : 1	**Alchl/Drgs:** 0	**Speed:** 0 MPH	**Dir:** W	**Veh Mnvr/Ped Actn:** 8	**Obj Strk:**											
107	**104720209**	1.627	05/01/2016 16:32	SIDESWIPE, SAME DIRECTION	$ 4000	0	0	0	0	1	1	1	1	0	3	1
Unit 1 : 4	**Alchl/Drgs:** 0	**Speed:** 30 MPH	**Dir:** E	**Veh Mnvr/Ped Actn:** 5	**Obj Strk:**											
Unit 2 : 1	**Alchl/Drgs:** 0	**Speed:** 30 MPH	**Dir:** E	**Veh Mnvr/Ped Actn:** 4	**Obj Strk:**											
108	**104748280**	1.627	05/23/2016 17:35	REAR END, SLOW OR STOP	$ 8000	0	0	0	3	1	1	1	7	0	3	1
Unit 1 : 1	**Alchl/Drgs:** 0	**Speed:** 45 MPH	**Dir:** E	**Veh Mnvr/Ped Actn:** 4	**Obj Strk:**											
Unit 2 : 4	**Alchl/Drgs:** 0	**Speed:** 0 MPH	**Dir:** E	**Veh Mnvr/Ped Actn:** 1	**Obj Strk:**											
109	**104782267**	1.627	07/04/2016 18:03	FIXED OBJECT	$ 9200	0	0	0	0	1	1	1	5	0	0	
Unit 1 : 1	**Alchl/Drgs:** 0	**Speed:** 50 MPH	**Dir:** E	**Veh Mnvr/Ped Actn:** 7	**Obj Strk:** 55											
110	**104841193**	1.627	09/04/2016 00:56	REAR END, SLOW OR STOP	$ 17000	0	0	0	0	1	5	1	7	0	0	
Unit 1 : 2	**Alchl/Drgs:** 0	**Speed:** 55 MPH	**Dir:** E	**Veh Mnvr/Ped Actn:** 11	**Obj Strk:**											

DRAFT

All data presented in this report comes explicitly from the Traffic Engineering Accident Analysis System based upon va criteria provided by the report's creator. The onus is strictly upon the user of this report to exercise due diligence in in and further representing this data.

DocuSign Envelope ID: 5C03745C-4B01-4834-A65D-B77F558A4F46

North Carolina Department of Transportation
Traffic Engineering Accident Analysis System
Strip Analysis Report

Acc No	Crash ID	Milepost	Date	Accident Type	Total Damage	Injuries F	A	B	C	Condition R	L	W	Road Ch	Ci	Trfc Ctl Dv	Op
Unit	**2 :** 1	**Alchl/Drgs:**	0	**Speed:** 55 MPH	**Dir:** E	**Veh Mnvr/Ped Actn:**				11			**Obj Strk:**			
111	**104946085**	1.627	12/12/2016 20:32	LEFT TURN, DIFFERENT ROADWAYS	$ 3000	0	0	0	0	1	4	1	1	0	3	1
Unit	**1 :** 1	**Alchl/Drgs:**	0	**Speed:** 30 MPH	**Dir:** W	**Veh Mnvr/Ped Actn:**				4			**Obj Strk:**			
Unit	**2 :** 1	**Alchl/Drgs:**	0	**Speed:** 35 MPH	**Dir:** W	**Veh Mnvr/Ped Actn:**				4			**Obj Strk:**			
112	**105057165**	1.627	04/02/2017 09:21	REAR END, SLOW OR STOP	$ 2500	0	0	0	0	1	1	1	3	0	3	1
Unit	**1 :** 4	**Alchl/Drgs:**	0	**Speed:** 10 MPH	**Dir:** W	**Veh Mnvr/Ped Actn:**				4			**Obj Strk:**			
Unit	**2 :** 1	**Alchl/Drgs:**	0	**Speed:** 0 MPH	**Dir:** W	**Veh Mnvr/Ped Actn:**				1			**Obj Strk:**			
113	**105181734**	1.627	08/04/2017 19:43	SIDESWIPE, SAME DIRECTION	$ 3500	0	0	0	0	1	1	2	7	0	3	1
Unit	**1 :** 1	**Alchl/Drgs:**	0	**Speed:** 25 MPH	**Dir:** S	**Veh Mnvr/Ped Actn:**				4			**Obj Strk:**			
Unit	**2 :** 1	**Alchl/Drgs:**	0	**Speed:** 35 MPH	**Dir:** S	**Veh Mnvr/Ped Actn:**				4			**Obj Strk:**			
114	**105220454**	1.627	09/13/2017 18:31	SIDESWIPE, SAME DIRECTION	$ 1000	0	0	0	0	1	1	2	7	0	0	
Unit	**1 :** 14	**Alchl/Drgs:**	0	**Speed:** 25 MPH	**Dir:** NW	**Veh Mnvr/Ped Actn:**				5			**Obj Strk:**			
Unit	**2 :** 1	**Alchl/Drgs:**	0	**Speed:** 25 MPH	**Dir:** NW	**Veh Mnvr/Ped Actn:**				4			**Obj Strk:**			
115	**105348389**	1.627	01/11/2018 18:49	SIDESWIPE, SAME DIRECTION	$ 6000	0	0	0	0	2	5	3	7	0	3	1
Unit	**1 :** 1	**Alchl/Drgs:**	0	**Speed:** 30 MPH	**Dir:** W	**Veh Mnvr/Ped Actn:**				4			**Obj Strk:**			
Unit	**2 :** 2	**Alchl/Drgs:**	0	**Speed:** 30 MPH	**Dir:** W	**Veh Mnvr/Ped Actn:**				4			**Obj Strk:**			
116	**105427418**	1.627	03/27/2018 14:58	LEFT TURN, DIFFERENT ROADWAYS	$ 2700	0	0	0	0	1	1	2	3	0	3	1
Unit	**1 :** 1	**Alchl/Drgs:**	0	**Speed:** 0 MPH	**Dir:** NW	**Veh Mnvr/Ped Actn:**				8			**Obj Strk:**			
Unit	**2 :** 1	**Alchl/Drgs:**	0	**Speed:** 0 MPH	**Dir:** W	**Veh Mnvr/Ped Actn:**				4			**Obj Strk:**			
117	**105469835**	1.627	05/05/2018 13:05	REAR END, SLOW OR STOP	$ 5500	0	0	0	1	1	1	1	7	0	3	1
Unit	**1 :** 5	**Alchl/Drgs:**	0	**Speed:** 30 MPH	**Dir:** E	**Veh Mnvr/Ped Actn:**				4			**Obj Strk:**			
Unit	**2 :** 4	**Alchl/Drgs:**	0	**Speed:** 0 MPH	**Dir:** E	**Veh Mnvr/Ped Actn:**				1			**Obj Strk:**			
Unit	**3 :** 1	**Alchl/Drgs:**	0	**Speed:** 0 MPH	**Dir:** E	**Veh Mnvr/Ped Actn:**				1			**Obj Strk:**			
118	**105559657**	1.627	07/28/2018 20:04	LEFT TURN, DIFFERENT ROADWAYS	$ 2500	0	0	0	0	1	1	1	3	0	3	1
Unit	**1 :** 1	**Alchl/Drgs:**	0	**Speed:** 35 MPH	**Dir:** E	**Veh Mnvr/Ped Actn:**				8			**Obj Strk:**			
Unit	**2 :** 1	**Alchl/Drgs:**	0	**Speed:** 45 MPH	**Dir:** W	**Veh Mnvr/Ped Actn:**				4			**Obj Strk:**			
119	**105562046**	1.627	08/05/2018 15:59	HEAD ON	$ 10000	0	0	0	3	1	1	1	3	0	3	1
Unit	**1 :** 4	**Alchl/Drgs:**	0	**Speed:** 10 MPH	**Dir:** E	**Veh Mnvr/Ped Actn:**				8			**Obj Strk:**			

DRAFT

DocuSign Envelope ID: 5C03745C-4B01-4834-A65D-B77F558A4F46

North Carolina Department of Transportation
Traffic Engineering Accident Analysis System
Strip Analysis Report

Acc No	Crash ID	Milepost	Date	Accident Type	Total Damage	Injuries F	A	B	C	Condition R	L	W	Road Ch	Ci	Trfc Ctl Dv	Op
Unit	**2 :** 1	**Alchl/Drgs:**	0	**Speed:** 45 MPH	**Dir:** W	**Veh Mnvr/Ped Actn:**				4			**Obj Strk:**			
120	**105569733**	1.627	08/11/2018 14:49	REAR END, SLOW OR STOP	$ 5000	0	0	0	0	1	1	1	7	0	3	1
Unit	**1 :** 4	**Alchl/Drgs:**	0	**Speed:** 50 MPH	**Dir:** S	**Veh Mnvr/Ped Actn:**				4			**Obj Strk:**			
Unit	**2 :** 4	**Alchl/Drgs:**	0	**Speed:** 50 MPH	**Dir:** S	**Veh Mnvr/Ped Actn:**				1			**Obj Strk:**			
121	**105585889**	1.627	08/28/2018 08:51	REAR END, SLOW OR STOP	$ 1600	0	0	0	0	1	1	1	7	0	3	1
Unit	**1 :** 10	**Alchl/Drgs:**	0	**Speed:** 30 MPH	**Dir:** SE	**Veh Mnvr/Ped Actn:**				4			**Obj Strk:**			
Unit	**2 :** 2	**Alchl/Drgs:**	0	**Speed:** 20 MPH	**Dir:** SE	**Veh Mnvr/Ped Actn:**				1			**Obj Strk:**			
122	**105602034**	1.627	09/11/2018 12:44	LEFT TURN, SAME ROADWAY	$ 5000	0	0	0	0	2	1	3	7	0	3	1
Unit	**1 :** 1	**Alchl/Drgs:**	0	**Speed:** 20 MPH	**Dir:** SW	**Veh Mnvr/Ped Actn:**				8			**Obj Strk:**			
Unit	**2 :** 1	**Alchl/Drgs:**	0	**Speed:** 40 MPH	**Dir:** E	**Veh Mnvr/Ped Actn:**				4			**Obj Strk:**			
123	**105610550**	1.627	09/22/2018 16:07	SIDESWIPE, SAME DIRECTION	$ 2500	0	0	0	0	1	1	1	3	0	3	1
Unit	**1 :** 4	**Alchl/Drgs:**	0	**Speed:** 20 MPH	**Dir:** S	**Veh Mnvr/Ped Actn:**				8			**Obj Strk:**			
Unit	**2 :** 5	**Alchl/Drgs:**	0	**Speed:** 20 MPH	**Dir:** S	**Veh Mnvr/Ped Actn:**				8			**Obj Strk:**			
124	**105732770**	1.627	01/05/2019 17:31	SIDESWIPE, SAME DIRECTION	$ 2000	0	0	0	0	1	5	1	3	0	3	1
Unit	**1 :** 1	**Alchl/Drgs:**	0	**Speed:** 25 MPH	**Dir:** E	**Veh Mnvr/Ped Actn:**				5			**Obj Strk:**			
Unit	**2 :** 2	**Alchl/Drgs:**	0	**Speed:** 25 MPH	**Dir:** E	**Veh Mnvr/Ped Actn:**				4			**Obj Strk:**			
125	**105740746**	1.627	01/11/2019 20:24	REAR END, SLOW OR STOP	$ 6000	0	0	0	0	1	5	1	7	0	3	1
Unit	**1 :** 1	**Alchl/Drgs:**	0	**Speed:** 40 MPH	**Dir:** S	**Veh Mnvr/Ped Actn:**				4			**Obj Strk:**			
Unit	**2 :** 1	**Alchl/Drgs:**	0	**Speed:** 0 MPH	**Dir:** S	**Veh Mnvr/Ped Actn:**				1			**Obj Strk:**			
126	**105848172**	1.627	04/15/2019 17:31	RIGHT TURN, DIFFERENT ROADWAYS	$ 1700	0	0	0	0	1	1	1	1	0	2	1
Unit	**1 :** 1	**Alchl/Drgs:**	0	**Speed:** 10 MPH	**Dir:** W	**Veh Mnvr/Ped Actn:**				7			**Obj Strk:**			
Unit	**2 :** 1	**Alchl/Drgs:**	0	**Speed:** 35 MPH	**Dir:** W	**Veh Mnvr/Ped Actn:**				4			**Obj Strk:**			
127	**105844522**	1.627	04/26/2019 00:58	SIDESWIPE, SAME DIRECTION	$ 2800	0	0	0	0	2	5	3	7	0	0	
Unit	**1 :** 4	**Alchl/Drgs:**	0	**Speed:** 20 MPH	**Dir:** S	**Veh Mnvr/Ped Actn:**				5			**Obj Strk:**			
Unit	**2 :** 1	**Alchl/Drgs:**	0	**Speed:** 20 MPH	**Dir:** S	**Veh Mnvr/Ped Actn:**				4			**Obj Strk:**			
128	**105863582**	1.627	04/27/2019 21:34	HEAD ON	$ 10000	0	0	0	2	1	4	1	3	0	12	1
Unit	**1 :** 4	**Alchl/Drgs:**	0	**Speed:** 45 MPH	**Dir:** E	**Veh Mnvr/Ped Actn:**				4			**Obj Strk:**			
Unit	**2 :** 1	**Alchl/Drgs:**	0	**Speed:** 20 MPH	**Dir:** W	**Veh Mnvr/Ped Actn:**				8			**Obj Strk:**			

DRAFT

DocuSign Envelope ID: 5C03745C-4B01-4834-A65D-B77F558A4F46

North Carolina Department of Transportation
Traffic Engineering Accident Analysis System
Strip Analysis Report

Acc No	Crash ID	Milepost	Date	Accident Type	Total Damage	Injuries F	A	B	C	Condition R	L	W	Road Ch	Ci	Trfc Ctl Dv	Op
129	**105927869**	1.627	07/15/2019 04:25	FIXED OBJECT	$ 6000	0	0	0	1	1	5	2	3	0	3	1
Unit	**1 :** 4	**Alchl/Drgs:** 0	**Speed:** 45 MPH	**Dir:** W	**Veh Mnvr/Ped Actn:** 8	**Obj Strk:** 52										
130	**105930278**	1.627	07/19/2019 19:47	FIXED OBJECT	$ 3800	0	0	0	0	1	1	1	7	0	3	1
Unit	**1 :** 4	**Alchl/Drgs:** 0	**Speed:** 25 MPH	**Dir:** E	**Veh Mnvr/Ped Actn:** 4	**Obj Strk:** 64										
131	**105944080**	1.627	07/31/2019 12:02	SIDESWIPE, SAME DIRECTION	$ 6000	0	0	0	1	1	1	2	1	0	3	1
Unit	**1 :** 4	**Alchl/Drgs:** 0	**Speed:** 10 MPH	**Dir:** W	**Veh Mnvr/Ped Actn:** 8	**Obj Strk:**										
Unit	**2 :** 4	**Alchl/Drgs:** 0	**Speed:** 15 MPH	**Dir:** W	**Veh Mnvr/Ped Actn:** 8	**Obj Strk:**										
132	**106009622**	1.627	09/30/2019 08:31	REAR END, SLOW OR STOP	$ 14000	0	0	0	0	1	1	1	3	0	3	1
Unit	**1 :** 1	**Alchl/Drgs:** 0	**Speed:** 30 MPH	**Dir:** E	**Veh Mnvr/Ped Actn:** 4	**Obj Strk:**										
Unit	**2 :** 4	**Alchl/Drgs:** 0	**Speed:** 25 MPH	**Dir:** E	**Veh Mnvr/Ped Actn:** 1	**Obj Strk:**										
Unit	**3 :** 1	**Alchl/Drgs:** 0	**Speed:** 25 MPH	**Dir:** E	**Veh Mnvr/Ped Actn:** 1	**Obj Strk:**										
133	**106039411**	1.627	10/25/2019 15:04	REAR END, SLOW OR STOP	$ 5500	0	0	0	0	1	1	2	7	0	3	1
Unit	**1 :** 5	**Alchl/Drgs:** 0	**Speed:** 15 MPH	**Dir:** S	**Veh Mnvr/Ped Actn:** 4	**Obj Strk:**										
Unit	**2 :** 4	**Alchl/Drgs:** 0	**Speed:** 0 MPH	**Dir:** S	**Veh Mnvr/Ped Actn:** 1	**Obj Strk:**										
134	**106120929**	1.627	01/09/2020 17:19	REAR END, SLOW OR STOP	$ 2000	0	0	0	0	1	1	1	7	0	3	1
Unit	**1 :** 4	**Alchl/Drgs:** 0	**Speed:** 55 MPH	**Dir:** E	**Veh Mnvr/Ped Actn:** 1	**Obj Strk:**										
Unit	**2 :** 1	**Alchl/Drgs:** 0	**Speed:** 55 MPH	**Dir:** E	**Veh Mnvr/Ped Actn:** 4	**Obj Strk:**										
135	**106131251**	1.627	01/18/2020 20:10	LEFT TURN, SAME ROADWAY	$ 8500	0	0	0	0	1	4	1	3	0	3	1
Unit	**1 :** 1	**Alchl/Drgs:** 0	**Speed:** 0 MPH	**Dir:** E	**Veh Mnvr/Ped Actn:** 4	**Obj Strk:**										
Unit	**2 :** 4	**Alchl/Drgs:** 0	**Speed:** 0 MPH	**Dir:** W	**Veh Mnvr/Ped Actn:** 8	**Obj Strk:**										
Unit	**3 :** 1	**Alchl/Drgs:** 0	**Speed:** 0 MPH	**Dir:** W	**Veh Mnvr/Ped Actn:** 8	**Obj Strk:**										
136	**106146757**	1.627	01/31/2020 14:14	SIDESWIPE, SAME DIRECTION	$ 4000	0	0	0	0	2	1	3	5	0	3	1
Unit	**1 :** 5	**Alchl/Drgs:** 0	**Speed:** 15 MPH	**Dir:** W	**Veh Mnvr/Ped Actn:** 8	**Obj Strk:**										
Unit	**2 :** 2	**Alchl/Drgs:** 0	**Speed:** 15 MPH	**Dir:** W	**Veh Mnvr/Ped Actn:** 8	**Obj Strk:**										
137	**106154230**	1.627	02/11/2020 14:23	REAR END, SLOW OR STOP	$ 14400	0	0	1	1	2	1	2	7	0	3	1
Unit	**1 :** 10	**Alchl/Drgs:** 0	**Speed:** 40 MPH	**Dir:** NW	**Veh Mnvr/Ped Actn:** 4	**Obj Strk:**										
Unit	**2 :** 3	**Alchl/Drgs:** 0	**Speed:** 0 MPH	**Dir:** NW	**Veh Mnvr/Ped Actn:** 1	**Obj Strk:**										
Unit	**3 :** 2	**Alchl/Drgs:** 0	**Speed:** 0 MPH	**Dir:** NW	**Veh Mnvr/Ped Actn:** 1	**Obj Strk:**										

DRAFT

DocuSign Envelope ID: 5C03745C-4B01-4834-A65D-B77F558A4F46

North Carolina Department of Transportation
Traffic Engineering Accident Analysis System
Strip Analysis Report

Acc No	Crash ID	Milepost	Date	Accident Type	Total Damage	Injuries F	A	B	C	Condition R	L	W	Road Ch	Ci	Trfc Ctl Dv	Op
138	**106280101**	1.627	07/18/2020 15:49	REAR END, SLOW OR STOP	$ 5000	0	0	0	1	1	1	1	1	0	3	1
Unit	**1 :** 1	**Alchl/Drgs:** 0	**Speed:** 40 MPH	**Dir:** W	**Veh Mnvr/Ped Actn:** 4	**Obj Strk:**										
Unit	**2 :** 1	**Alchl/Drgs:** 0	**Speed:** 40 MPH	**Dir:** W	**Veh Mnvr/Ped Actn:** 1	**Obj Strk:**										
139	**106285134**	1.627	07/20/2020 20:53	RIGHT TURN, SAME ROADWAY	$ 4000	0	0	0	0	1	5	1	7	0	3	1
Unit	**1 :** 1	**Alchl/Drgs:** 0	**Speed:** 25 MPH	**Dir:** SE	**Veh Mnvr/Ped Actn:** 8	**Obj Strk:**										
Unit	**2 :** 1	**Alchl/Drgs:** 0	**Speed:** 15 MPH	**Dir:** NW	**Veh Mnvr/Ped Actn:** 8	**Obj Strk:**										
140	**106308661**	1.627	08/14/2020 12:45	LEFT TURN, DIFFERENT ROADWAYS	$ 2400	0	0	0	0	1	1	1	7	0	3	1
Unit	**1 :** 1	**Alchl/Drgs:** 0	**Speed:** 10 MPH	**Dir:** SE	**Veh Mnvr/Ped Actn:** 8	**Obj Strk:**										
Unit	**2 :** 4	**Alchl/Drgs:** 0	**Speed:** 10 MPH	**Dir:** W	**Veh Mnvr/Ped Actn:** 4	**Obj Strk:**										
141	**106338453**	1.627	09/14/2020 11:20	LEFT TURN, DIFFERENT ROADWAYS	$ 3000	0	0	0	0	1	1	1	3	0	3	1
Unit	**1 :** 1	**Alchl/Drgs:** 0	**Speed:** 50 MPH	**Dir:** S	**Veh Mnvr/Ped Actn:** 8	**Obj Strk:**										
Unit	**2 :** 10	**Alchl/Drgs:** 0	**Speed:** 45 MPH	**Dir:** W	**Veh Mnvr/Ped Actn:** 4	**Obj Strk:**										
142	**106364738**	1.627	10/10/2020 03:30	FIXED OBJECT	$ 5500	0	0	0	0	2	4	3	3	0	3	1
Unit	**1 :** 1	**Alchl/Drgs:** 7	**Speed:** 60 MPH	**Dir:** E	**Veh Mnvr/Ped Actn:** 4	**Obj Strk:** 37										
143	**106396371**	1.627	10/19/2020 10:45	SIDESWIPE, SAME DIRECTION	$ 1300	0	0	0	0	1	1	1	1	0	3	1
Unit	**1 :** 4	**Alchl/Drgs:** 0	**Speed:** 15 MPH	**Dir:** W	**Veh Mnvr/Ped Actn:** 4	**Obj Strk:**										
Unit	**2 :** 1	**Alchl/Drgs:** 0	**Speed:** 45 MPH	**Dir:** SW	**Veh Mnvr/Ped Actn:** 8	**Obj Strk:**										
144	**106428071**	1.627	12/05/2020 08:17	REAR END, SLOW OR STOP	$ 5000	0	0	0	0	1	1	1	1	0	3	1
Unit	**1 :** 1	**Alchl/Drgs:** 0	**Speed:** 35 MPH	**Dir:** E	**Veh Mnvr/Ped Actn:** 4	**Obj Strk:**										
Unit	**2 :** 2	**Alchl/Drgs:** 0	**Speed:** 0 MPH	**Dir:** E	**Veh Mnvr/Ped Actn:** 1	**Obj Strk:**										
145	**106497573**	1.627	12/28/2020 13:05	SIDESWIPE, SAME DIRECTION	$ 7000	0	0	0	0	1	1	2	1	0	3	1
Unit	**1 :** 10	**Alchl/Drgs:** 0	**Speed:** 20 MPH	**Dir:** S	**Veh Mnvr/Ped Actn:** 4	**Obj Strk:**										
Unit	**2 :** 31	**Alchl/Drgs:** 0	**Speed:** 20 MPH	**Dir:** S	**Veh Mnvr/Ped Actn:** 5	**Obj Strk:**										
146	**106430542**	1.630	12/07/2020 20:47	LEFT TURN, DIFFERENT ROADWAYS	$ 9500	0	0	2	1	1	5	1	3	0	12	1
Unit	**1 :** 1	**Alchl/Drgs:** 0	**Speed:** 55 MPH	**Dir:** S	**Veh Mnvr/Ped Actn:** 4	**Obj Strk:**										
Unit	**2 :** 1	**Alchl/Drgs:** 0	**Speed:** 55 MPH	**Dir:** N	**Veh Mnvr/Ped Actn:** 8	**Obj Strk:**										

DRAFT

All data presented in this report comes explicitly from the Traffic Engineering Accident Analysis System based upon va criteria provided by the report's creator. The onus is strictly upon the user of this report to exercise due diligence in in and further representing this data.

DocuSign Envelope ID: 5C03745C-4B01-4834-A65D-B77F558A4F46

North Carolina Department of Transportation
Traffic Engineering Accident Analysis System
Strip Analysis Report

Acc No	Crash ID	Milepost	Date	Accident Type	Total Damage	Injuries F	A	B	C	Condition R	L	W	Road Ch	Ci	Trfc Ctl Dv	Op
147	**106456618**	1.630	01/04/2021 18:16	SIDESWIPE, SAME DIRECTION	$ 2500	0	0	0	0	1	5	1	7	0	3	1
Unit	**1 :** 1	**Alchl/Drgs:** 0	**Speed:** 25 MPH	**Dir:** N	**Veh Mnvr/Ped Actn:** 8	**Obj Strk:**										
Unit	**2 :** 4	**Alchl/Drgs:** 0	**Speed:** 25 MPH	**Dir:** N	**Veh Mnvr/Ped Actn:** 8	**Obj Strk:**										
148	**106490153**	1.631	02/14/2021 12:14	REAR END, SLOW OR STOP	$ 4000	0	0	0	0	2	1	3	3	0	3	1
Unit	**1 :** 4	**Alchl/Drgs:** 0	**Speed:** 0 MPH	**Dir:** W	**Veh Mnvr/Ped Actn:** 4	**Obj Strk:**										
Unit	**2 :** 1	**Alchl/Drgs:** 0	**Speed:** 0 MPH	**Dir:** W	**Veh Mnvr/Ped Actn:** 1	**Obj Strk:**										
149	**105890169**	1.633	06/09/2019 12:58	REAR END, SLOW OR STOP	$ 1000	0	0	0	3	2	1	3	3	0	3	1
Unit	**1 :** 4	**Alchl/Drgs:** 0	**Speed:** 25 MPH	**Dir:** W	**Veh Mnvr/Ped Actn:** 1	**Obj Strk:**										
Unit	**2 :** 4	**Alchl/Drgs:** 0	**Speed:** 30 MPH	**Dir:** W	**Veh Mnvr/Ped Actn:** 4	**Obj Strk:**										
150	**104955644**	1.636	12/20/2016 19:43	BACKING UP	$ 2700	0	0	0	0	1	1	1	1	0	3	1
Unit	**1 :** 4	**Alchl/Drgs:** 0	**Speed:** 10 MPH	**Dir:** S	**Veh Mnvr/Ped Actn:** 10	**Obj Strk:**										
Unit	**2 :** 1	**Alchl/Drgs:** 0	**Speed:** 0 MPH	**Dir:** S	**Veh Mnvr/Ped Actn:** 1	**Obj Strk:**										
151	**106295862**	1.636	08/03/2020 14:00	OTHER COLLISION WITH VEHICLE	$ 270	0	0	0	0	2	1	3	3	0	0	
Unit	**1 :** 3	**Alchl/Drgs:** 0	**Speed:** 45 MPH	**Dir:** E	**Veh Mnvr/Ped Actn:** 16	**Obj Strk:**										
Unit	**2 :** 4	**Alchl/Drgs:** 0	**Speed:** 25 MPH	**Dir:** E	**Veh Mnvr/Ped Actn:** 16	**Obj Strk:**										
152	**105143563**	1.637	06/17/2017 08:36	REAR END, SLOW OR STOP	$ 3500	0	0	0	0	1	1	1	3	0	3	1
Unit	**1 :** 5	**Alchl/Drgs:** 0	**Speed:** 10 MPH	**Dir:** E	**Veh Mnvr/Ped Actn:** 11	**Obj Strk:**										
Unit	**2 :** 4	**Alchl/Drgs:** 0	**Speed:** 0 MPH	**Dir:** E	**Veh Mnvr/Ped Actn:** 1	**Obj Strk:**										
Unit	**3 :** 4	**Alchl/Drgs:** 0	**Speed:** 0 MPH	**Dir:** E	**Veh Mnvr/Ped Actn:** 1	**Obj Strk:**										
153	**105076428**	1.646	04/16/2017 13:17	REAR END, SLOW OR STOP	$ 3000	0	0	0	0	1	1	1	1	0		
Unit	**1 :** 1	**Alchl/Drgs:** 0	**Speed:** 15 MPH	**Dir:** E	**Veh Mnvr/Ped Actn:** 4	**Obj Strk:**										
Unit	**2 :** 2	**Alchl/Drgs:** 0	**Speed:** 0 MPH	**Dir:** E	**Veh Mnvr/Ped Actn:** 1	**Obj Strk:**										
154	**105530806**	1.646	06/25/2018 13:59	SIDESWIPE, SAME DIRECTION	$ 1500	0	0	0	0	1	1	2	3	0	14	1
Unit	**1 :** 4	**Alchl/Drgs:** 0	**Speed:** 25 MPH	**Dir:** E	**Veh Mnvr/Ped Actn:** 7	**Obj Strk:**										
Unit	**2 :** 1	**Alchl/Drgs:** 0	**Speed:** 30 MPH	**Dir:** E	**Veh Mnvr/Ped Actn:** 7	**Obj Strk:**										
155	**105542801**	1.646	07/16/2018 08:30	REAR END, SLOW OR STOP	$ 7000	0	0	0	1	1	1	2	7	0	3	1
Unit	**1 :** 4	**Alchl/Drgs:** 0	**Speed:** 0 MPH	**Dir:** S	**Veh Mnvr/Ped Actn:** 4	**Obj Strk:**										
Unit	**2 :** 2	**Alchl/Drgs:** 0	**Speed:** 2 MPH	**Dir:** S	**Veh Mnvr/Ped Actn:** 1	**Obj Strk:**										

DRAFT

DocuSign Envelope ID: 5C03745C-4B01-4834-A65D-B77F558A4F46

North Carolina Department of Transportation
Traffic Engineering Accident Analysis System
Strip Analysis Report

Acc No	Crash ID	Milepost	Date	Accident Type	Total Damage	Injuries F	A	B	C	Condition R	L	W	Road Ch	Ci	Trfc Ctl Dv	Op
156	**105790203**	1.655	02/28/2019 21:31	REAR END, SLOW OR STOP	$ 4000	0	0	0	0	2	4	1	3	0	0	
Unit	**1 :** 1	**Alchl/Drgs:** 0	**Speed:** 35 MPH	**Dir:** S	**Veh Mnvr/Ped Actn:** 4	**Obj Strk:**										
Unit	**2 :** 1	**Alchl/Drgs:** 0	**Speed:** 35 MPH	**Dir:** S	**Veh Mnvr/Ped Actn:** 1	**Obj Strk:**										
157	**105099811**	1.665	05/04/2017 13:41	SIDESWIPE, SAME DIRECTION	$ 5000	0	0	0	0	2	1	3	1	0		2
Unit	**1 :** 1	**Alchl/Drgs:** 0	**Speed:** 35 MPH	**Dir:** E	**Veh Mnvr/Ped Actn:** 5	**Obj Strk:**										
Unit	**2 :** 1	**Alchl/Drgs:** 0	**Speed:** 35 MPH	**Dir:** E	**Veh Mnvr/Ped Actn:** 4	**Obj Strk:**										
158	**105356937**	1.665	01/19/2018 13:20	SIDESWIPE, SAME DIRECTION	$ 2000	0	0	0	0	1	1	1	1	0	0	
Unit	**1 :** 1	**Alchl/Drgs:** 7	**Speed:** 40 MPH	**Dir:** N	**Veh Mnvr/Ped Actn:** 4	**Obj Strk:**										
Unit	**2 :** 1	**Alchl/Drgs:** 0	**Speed:** 40 MPH	**Dir:** N	**Veh Mnvr/Ped Actn:** 4	**Obj Strk:**										
159	**106469795**	1.665	01/21/2021 09:26	SIDESWIPE, SAME DIRECTION	$ 2000	0	0	0	0	2	1	2	1	0	0	
Unit	**1 :** 2	**Alchl/Drgs:** 0	**Speed:** 30 MPH	**Dir:** W	**Veh Mnvr/Ped Actn:** 5	**Obj Strk:**										
Unit	**2 :** 2	**Alchl/Drgs:** 0	**Speed:** 30 MPH	**Dir:** W	**Veh Mnvr/Ped Actn:** 4	**Obj Strk:**										
160	**104725476**	1.710	05/03/2016 20:43	LEFT TURN, SAME ROADWAY	$ 12000	0	0	0	1	1	5	2	3	0	3	1
Unit	**1 :** 1	**Alchl/Drgs:** 0	**Speed:** 35 MPH	**Dir:** E	**Veh Mnvr/Ped Actn:** 4	**Obj Strk:**										
Unit	**2 :** 1	**Alchl/Drgs:** 0	**Speed:** 30 MPH	**Dir:** W	**Veh Mnvr/Ped Actn:** 8	**Obj Strk:**										
161	**104785616**	1.710	07/05/2016 09:07	SIDESWIPE, SAME DIRECTION	$ 1700	0	0	0	0	1	1	1	3	0	3	1
Unit	**1 :** 1	**Alchl/Drgs:** 0	**Speed:** 5 MPH	**Dir:** W	**Veh Mnvr/Ped Actn:** 5	**Obj Strk:**										
Unit	**2 :** 1	**Alchl/Drgs:** 0	**Speed:** 20 MPH	**Dir:** W	**Veh Mnvr/Ped Actn:** 4	**Obj Strk:**										
162	**104810842**	1.710	08/01/2016 18:47	REAR END, SLOW OR STOP	$ 3000	0	0	0	0	1	1	1	1	0	2	1
Unit	**1 :** 4	**Alchl/Drgs:** 0	**Speed:** 10 MPH	**Dir:** E	**Veh Mnvr/Ped Actn:** 5	**Obj Strk:**										
Unit	**2 :** 1	**Alchl/Drgs:** 0	**Speed:** 5 MPH	**Dir:** E	**Veh Mnvr/Ped Actn:** 1	**Obj Strk:**										
163	**104853757**	1.710	09/19/2016 12:12	SIDESWIPE, SAME DIRECTION	$ 3200	0	0	0	0	1	1	1	1	0	0	
Unit	**1 :** 1	**Alchl/Drgs:** 0	**Speed:** 0 MPH	**Dir:** W	**Veh Mnvr/Ped Actn:** 5	**Obj Strk:**										
Unit	**2 :** 1	**Alchl/Drgs:** 0	**Speed:** 40 MPH	**Dir:** W	**Veh Mnvr/Ped Actn:** 4	**Obj Strk:**										
164	**104890555**	1.710	10/21/2016 13:45	FIXED OBJECT	$ 2500	0	0	0	0	2	1	2	7	0	0	
Unit	**1 :** 1	**Alchl/Drgs:** 0	**Speed:** 40 MPH	**Dir:** E	**Veh Mnvr/Ped Actn:** 4	**Obj Strk:** 64										

DRAFT

DocuSign Envelope ID: 5C03745C-4B01-4834-A65D-B77F558A4F46

North Carolina Department of Transportation
Traffic Engineering Accident Analysis System
Strip Analysis Report

Acc No	Crash ID	Milepost	Date	Accident Type	Total Damage	Injuries F	A	B	C	Condition R	L	W	Road Ch	Ci	Trfc Ctl Dv	Op
165	**104955764**	1.710	12/19/2016 13:32	REAR END, SLOW OR STOP	$ 4000	0	0	0	0	1	1	1	1	0	2	1
Unit	**1 :** 4	**Alchl/Drgs:** 0	**Speed:** 60 MPH	**Dir:** N	**Veh Mnvr/Ped Actn:** 4	**Obj Strk:**										
Unit	**2 :** 2	**Alchl/Drgs:** 0	**Speed:** 60 MPH	**Dir:** N	**Veh Mnvr/Ped Actn:** 1	**Obj Strk:**										
166	**105000975**	1.710	02/07/2017 06:27	REAR END, SLOW OR STOP	$ 2700	0	0	0	0	1	5	1	7	0	2	1
Unit	**1 :** 2	**Alchl/Drgs:** 0	**Speed:** 30 MPH	**Dir:** E	**Veh Mnvr/Ped Actn:** 4	**Obj Strk:**										
Unit	**2 :** 1	**Alchl/Drgs:** 0	**Speed:** 0 MPH	**Dir:** E	**Veh Mnvr/Ped Actn:** 1	**Obj Strk:**										
167	**105411391**	1.710	03/13/2018 17:40	REAR END, SLOW OR STOP	$ 1600	0	0	0	1	1	1	1	7	0	2	1
Unit	**1 :** 1	**Alchl/Drgs:** 0	**Speed:** 10 MPH	**Dir:** W	**Veh Mnvr/Ped Actn:** 4	**Obj Strk:**										
Unit	**2 :** 1	**Alchl/Drgs:** 0	**Speed:** 0 MPH	**Dir:** W	**Veh Mnvr/Ped Actn:** 1	**Obj Strk:**										
168	**105536869**	1.710	06/25/2018 05:58	LEFT TURN, SAME ROADWAY	$ 16000	0	0	0	0	1	3	1	3	0	3	1
Unit	**1 :** 1	**Alchl/Drgs:** 0	**Speed:** 35 MPH	**Dir:** E	**Veh Mnvr/Ped Actn:** 8	**Obj Strk:**										
Unit	**2 :** 5	**Alchl/Drgs:** 0	**Speed:** 35 MPH	**Dir:** W	**Veh Mnvr/Ped Actn:** 4	**Obj Strk:**										
169	**105543974**	1.710	07/17/2018 07:51	OVERTURN/ROLLOVER	$ 3000	0	0	0	1	1	1	1	7	0	0	
Unit	**1 :** 1	**Alchl/Drgs:** 0	**Speed:** 50 MPH	**Dir:** NW	**Veh Mnvr/Ped Actn:** 4	**Obj Strk:**										
170	**105804849**	1.710	03/17/2019 07:36	FIXED OBJECT	$ 4500	0	0	0	0	1	3	1	1	0	2	1
Unit	**1 :** 1	**Alchl/Drgs:** 0	**Speed:** 60 MPH	**Dir:** N	**Veh Mnvr/Ped Actn:** 4	**Obj Strk:** 64										
171	**105903344**	1.710	06/22/2019 17:10	REAR END, SLOW OR STOP	$ 1000	0	0	0	0	1	1	1	1	0	0	
Unit	**1 :** 4	**Alchl/Drgs:** 2	**Speed:** 10 MPH	**Dir:** W	**Veh Mnvr/Ped Actn:** 11	**Obj Strk:**										
Unit	**2 :** 1	**Alchl/Drgs:** 0	**Speed:** 10 MPH	**Dir:** W	**Veh Mnvr/Ped Actn:** 11	**Obj Strk:**										
172	**104874724**	1.717	10/03/2016 20:55	REAR END, SLOW OR STOP	$ 1500	0	0	0	0	1	5	1	1	0	3	1
Unit	**1 :** 1	**Alchl/Drgs:** 0	**Speed:** 10 MPH	**Dir:** W	**Veh Mnvr/Ped Actn:** 4	**Obj Strk:**										
Unit	**2 :** 1	**Alchl/Drgs:** 0	**Speed:** 0 MPH	**Dir:** W	**Veh Mnvr/Ped Actn:** 1	**Obj Strk:**										
173	**105475073**	1.717	05/10/2018 14:58	REAR END, SLOW OR STOP	$ 2200	0	0	0	0	1	1	1	3	0	0	
Unit	**1 :** 1	**Alchl/Drgs:** 0	**Speed:** 20 MPH	**Dir:** E	**Veh Mnvr/Ped Actn:** 4	**Obj Strk:**										
Unit	**2 :** 1	**Alchl/Drgs:** 0	**Speed:** 0 MPH	**Dir:** E	**Veh Mnvr/Ped Actn:** 1	**Obj Strk:**										
174	**105942360**	1.717	07/13/2019 19:45	REAR END, SLOW OR STOP	$ 5200	0	0	0	0	1	1	1	1	0	3	1
Unit	**1 :** 5	**Alchl/Drgs:** 0	**Speed:** 45 MPH	**Dir:** W	**Veh Mnvr/Ped Actn:** 4	**Obj Strk:**										

DRAFT

DocuSign Envelope ID: 5C03745C-4B01-4834-A65D-B77F558A4F46

North Carolina Department of Transportation
Traffic Engineering Accident Analysis System
Strip Analysis Report

Acc No	Crash ID	Milepost	Date	Accident Type	Total Damage	Injuries F	A	B	C	Condition R	L	W	Road Ch	Ci	Trfc Ctl Dv	Op
Unit	**2 :** 1	**Alchl/Drgs:**	0	**Speed:** 25 MPH	**Dir:** W	**Veh Mnvr/Ped Actn:**				11			**Obj Strk:**			
175	**106118564**	1.717	12/05/2019 18:03	REAR END, SLOW OR STOP	$ 5100	0	0	0	0	1	4	1	1	0	0	2
Unit	**1 :** 1	**Alchl/Drgs:**	0	**Speed:** 40 MPH	**Dir:** W	**Veh Mnvr/Ped Actn:**				5			**Obj Strk:**			
Unit	**2 :** 1	**Alchl/Drgs:**	0	**Speed:** 30 MPH	**Dir:** W	**Veh Mnvr/Ped Actn:**				4			**Obj Strk:**			
Unit	**3 :** 1	**Alchl/Drgs:**	0	**Speed:** 20 MPH	**Dir:** W	**Veh Mnvr/Ped Actn:**				4			**Obj Strk:**			
176	**106144945**	1.717	12/24/2019 20:50	REAR END, SLOW OR STOP	$ 1000	0	0	0	1	1	4	1	1	0	3	1
Unit	**1 :** 1	**Alchl/Drgs:**	0	**Speed:** 40 MPH	**Dir:** W	**Veh Mnvr/Ped Actn:**				4			**Obj Strk:**			
Unit	**2 :** 1	**Alchl/Drgs:**	0	**Speed:** 0 MPH	**Dir:** W	**Veh Mnvr/Ped Actn:**				1			**Obj Strk:**			
177	**104891904**	1.727	10/07/2016 21:00	SIDESWIPE, SAME DIRECTION	$ 670	0	0	0	0	1	5	1	7	0	3	1
Unit	**1 :** 4	**Alchl/Drgs:**	7	**Speed:** 30 MPH	**Dir:** W	**Veh Mnvr/Ped Actn:**				5			**Obj Strk:**			
Unit	**2 :** 1	**Alchl/Drgs:**	7	**Speed:** 25 MPH	**Dir:** W	**Veh Mnvr/Ped Actn:**				4			**Obj Strk:**			
178	**105497711**	1.727	05/28/2018 14:49	LEFT TURN, SAME ROADWAY	$ 5500	0	0	0	0	2	1	3	3	0	3	2
Unit	**1 :** 2	**Alchl/Drgs:**	0	**Speed:** 5 MPH	**Dir:** W	**Veh Mnvr/Ped Actn:**				9			**Obj Strk:**			
Unit	**2 :** 1	**Alchl/Drgs:**	0	**Speed:** 5 MPH	**Dir:** W	**Veh Mnvr/Ped Actn:**				8			**Obj Strk:**			
179	**106137358**	1.727	01/27/2020 00:57	ANIMAL	$ 1000	0	0	0	0	1	5	1	1	0	0	
Unit	**1 :** 31	**Alchl/Drgs:**	0	**Speed:** 45 MPH	**Dir:** W	**Veh Mnvr/Ped Actn:**				4			**Obj Strk:**		17	
180	**104957419**	1.741	12/22/2016 12:59	REAR END, SLOW OR STOP	$ 6000	0	0	0	0	1	1	1	1	0	13	1
Unit	**1 :** 2	**Alchl/Drgs:**	0	**Speed:** 45 MPH	**Dir:** E	**Veh Mnvr/Ped Actn:**				11			**Obj Strk:**			
Unit	**2 :** 2	**Alchl/Drgs:**	0	**Speed:** 45 MPH	**Dir:** E	**Veh Mnvr/Ped Actn:**				4			**Obj Strk:**			
181	**105250094**	1.741	10/02/2017 08:16	REAR END, SLOW OR STOP	$ 1000	0	0	0	0	1	1	1	3	0	0	
Unit	**1 :** 1	**Alchl/Drgs:**	0	**Speed:** 15 MPH	**Dir:** E	**Veh Mnvr/Ped Actn:**				4			**Obj Strk:**			
Unit	**2 :** 1	**Alchl/Drgs:**	0	**Speed:** 0 MPH	**Dir:** E	**Veh Mnvr/Ped Actn:**				1			**Obj Strk:**			
182	**105664754**	1.747	10/26/2018 15:53	REAR END, SLOW OR STOP	$ 1100	0	0	0	0	2	1	3	3	0	0	2
Unit	**1 :** 2	**Alchl/Drgs:**	7	**Speed:** 30 MPH	**Dir:** W	**Veh Mnvr/Ped Actn:**				4			**Obj Strk:**			
Unit	**2 :** 1	**Alchl/Drgs:**	0	**Speed:** 5 MPH	**Dir:** W	**Veh Mnvr/Ped Actn:**				11			**Obj Strk:**			
183	**105266413**	1.777	10/14/2017 17:37	REAR END, SLOW OR STOP	$ 2000	0	0	0	0	1	1	1	3	0	0	2
Unit	**1 :** 1	**Alchl/Drgs:**	0	**Speed:** 0 MPH	**Dir:** E	**Veh Mnvr/Ped Actn:**				1			**Obj Strk:**			
Unit	**2 :** 4	**Alchl/Drgs:**	0	**Speed:** 0 MPH	**Dir:** E	**Veh Mnvr/Ped Actn:**				1			**Obj Strk:**			

DRAFT

DocuSign Envelope ID: 5C03745C-4B01-4834-A65D-B77F558A4F46

North Carolina Department of Transportation
Traffic Engineering Accident Analysis System
Strip Analysis Report

Acc No	Crash ID	Milepost	Date	Accident Type	Total Damage	Injuries F	A	B	C	Condition R	L	W	Road Ch	Ci	Trfc Ctl Dv	Op
184	**105935665**	1.777	06/27/2019 11:43	SIDESWIPE, SAME DIRECTION	$ 6500	0	0	0	0	1	1	1	1	0	0	2
Unit	**1 :** 1	**Alchl/Drgs:** 0	**Speed:** 45 MPH	**Dir:** E	**Veh Mnvr/Ped Actn:** 5	**Obj Strk:**										
Unit	**2 :** 1	**Alchl/Drgs:** 0	**Speed:** 45 MPH	**Dir:** E	**Veh Mnvr/Ped Actn:** 4	**Obj Strk:**										
185	**106497233**	1.778	12/24/2020 20:02	REAR END, SLOW OR STOP	$ 1600	0	0	0	0	6	4	4	3	0		2
Unit	**1 :** 1	**Alchl/Drgs:** 0	**Speed:** 25 MPH	**Dir:** W	**Veh Mnvr/Ped Actn:** 4	**Obj Strk:**										
Unit	**2 :** 2	**Alchl/Drgs:** 0	**Speed:** 20 MPH	**Dir:** W	**Veh Mnvr/Ped Actn:** 11	**Obj Strk:**										
186	**106096263**	1.779	11/25/2019 06:33	REAR END, SLOW OR STOP	$ 1300	0	0	0	0	1	3	1	1	0	3	1
Unit	**1 :** 4	**Alchl/Drgs:** 0	**Speed:** 30 MPH	**Dir:** E	**Veh Mnvr/Ped Actn:** 11	**Obj Strk:**										
Unit	**2 :** 4	**Alchl/Drgs:** 0	**Speed:** 15 MPH	**Dir:** E	**Veh Mnvr/Ped Actn:** 11	**Obj Strk:**										
187	**106286443**	1.779	07/25/2020 10:01	REAR END, SLOW OR STOP	$ 1900	0	0	0	0	1	1	1	3	0	3	1
Unit	**1 :** 4	**Alchl/Drgs:** 0	**Speed:** 45 MPH	**Dir:** W	**Veh Mnvr/Ped Actn:** 4	**Obj Strk:**										
Unit	**2 :** 1	**Alchl/Drgs:** 0	**Speed:** 45 MPH	**Dir:** W	**Veh Mnvr/Ped Actn:** 1	**Obj Strk:**										
188	**104961567**	1.789	11/27/2016 15:02	SIDESWIPE, SAME DIRECTION	$ 2500	0	0	0	0	1	1	2	7	0		
Unit	**1 :** 1	**Alchl/Drgs:** 0	**Speed:** 35 MPH	**Dir:** W	**Veh Mnvr/Ped Actn:** 5	**Obj Strk:**										
Unit	**2 :** 1	**Alchl/Drgs:** 0	**Speed:** 3 MPH	**Dir:** W	**Veh Mnvr/Ped Actn:** 4	**Obj Strk:**										
189	**105475072**	1.798	05/10/2018 14:48	REAR END, SLOW OR STOP	$ 1600	0	0	0	0	1	1	1	3	0	3	1
Unit	**1 :** 1	**Alchl/Drgs:** 0	**Speed:** 45 MPH	**Dir:** E	**Veh Mnvr/Ped Actn:** 4	**Obj Strk:**										
Unit	**2 :** 1	**Alchl/Drgs:** 0	**Speed:** 45 MPH	**Dir:** E	**Veh Mnvr/Ped Actn:** 1	**Obj Strk:**										
190	**105900280**	1.798	06/01/2019 13:33	REAR END, SLOW OR STOP	$ 9000	0	0	0	0	1	1	1	1	0		2
Unit	**1 :** 1	**Alchl/Drgs:** 0	**Speed:** 30 MPH	**Dir:** E	**Veh Mnvr/Ped Actn:** 4	**Obj Strk:**										
Unit	**2 :** 1	**Alchl/Drgs:** 0	**Speed:** 0 MPH	**Dir:** E	**Veh Mnvr/Ped Actn:** 1	**Obj Strk:**										
Unit	**3 :** 1	**Alchl/Drgs:** 0	**Speed:** 0 MPH	**Dir:** E	**Veh Mnvr/Ped Actn:** 1	**Obj Strk:**										
191	**105923879**	1.798	06/19/2019 13:05	REAR END, SLOW OR STOP	$ 3000	0	0	0	0	1	1	1	1	0	0	2
Unit	**1 :** 1	**Alchl/Drgs:** 0	**Speed:** 15 MPH	**Dir:** W	**Veh Mnvr/Ped Actn:** 4	**Obj Strk:**										
Unit	**2 :** 4	**Alchl/Drgs:** 0	**Speed:** 5 MPH	**Dir:** W	**Veh Mnvr/Ped Actn:** 4	**Obj Strk:**										
192	**105976656**	1.798	08/22/2019 21:08	REAR END, SLOW OR STOP	$ 1250	0	0	0	0	2	4	3	1	0	0	1
Unit	**1 :** 2	**Alchl/Drgs:** 0	**Speed:** 45 MPH	**Dir:** W	**Veh Mnvr/Ped Actn:** 4	**Obj Strk:**										
Unit	**2 :** 1	**Alchl/Drgs:** 0	**Speed:** 3 MPH	**Dir:** W	**Veh Mnvr/Ped Actn:** 11	**Obj Strk:**										

DRAFT

DocuSign Envelope ID: 5C03745C-4B01-4834-A65D-B77F558A4F46

North Carolina Department of Transportation
Traffic Engineering Accident Analysis System
Strip Analysis Report

Acc No	Crash ID	Milepost	Date	Accident Type	Total Damage	Injuries F	A	B	C	Condition R	L	W	Road Ch	Ci	Trfc Ctl Dv	Op
193	**104750049**	1.815	05/15/2016 20:50	REAR END, SLOW OR STOP	$ 2200	0	0	0	0	1	4	2	1	0		2
Unit	**1 :** 1	**Alchl/Drgs:**	7	**Speed:** 15 MPH	**Dir:** W	**Veh Mnvr/Ped Actn:**			4		**Obj Strk:**					
Unit	**2 :** 1	**Alchl/Drgs:**	0	**Speed:** 15 MPH	**Dir:** W	**Veh Mnvr/Ped Actn:**			11		**Obj Strk:**					
194	**105213427**	1.815	08/26/2017 09:38	ANGLE	$ 13400	0	0	0	1	1	1	1	1	0	3	1
Unit	**1 :** 4	**Alchl/Drgs:**	0	**Speed:** 30 MPH	**Dir:** SW	**Veh Mnvr/Ped Actn:**			4		**Obj Strk:**					
Unit	**2 :** 4	**Alchl/Drgs:**	0	**Speed:** 10 MPH	**Dir:** SW	**Veh Mnvr/Ped Actn:**			7		**Obj Strk:**					
195	**106185525**	1.815	01/28/2020 13:01	REAR END, SLOW OR STOP	$ 2500	0	0	0	0	1	1	1	1	0	0	2
Unit	**1 :** 1	**Alchl/Drgs:**	0	**Speed:** 15 MPH	**Dir:** W	**Veh Mnvr/Ped Actn:**			4		**Obj Strk:**					
Unit	**2 :** 1	**Alchl/Drgs:**	0	**Speed:** 0 MPH	**Dir:** W	**Veh Mnvr/Ped Actn:**			1		**Obj Strk:**					
196	**104731960**	1.817	04/21/2016 08:23	ANGLE	$ 2000	0	0	0	1	1	1	1	3	0	3	1
Unit	**1 :** 4	**Alchl/Drgs:**	0	**Speed:** 15 MPH	**Dir:** N	**Veh Mnvr/Ped Actn:**			4		**Obj Strk:**					
Unit	**2 :** 1	**Alchl/Drgs:**	0	**Speed:** 15 MPH	**Dir:** E	**Veh Mnvr/Ped Actn:**			4		**Obj Strk:**					
197	**104764041**	1.817	05/26/2016 11:27	REAR END, SLOW OR STOP	$ 2000	0	0	0	0	1	1	2	3	0	3	1
Unit	**1 :** 2	**Alchl/Drgs:**	0	**Speed:** 10 MPH	**Dir:** W	**Veh Mnvr/Ped Actn:**			12		**Obj Strk:**					
Unit	**2 :** 1	**Alchl/Drgs:**	0	**Speed:** 0 MPH	**Dir:** W	**Veh Mnvr/Ped Actn:**			1		**Obj Strk:**					
Unit	**3 :** 32	**Alchl/Drgs:**	7	**Speed:** 0 MPH	**Dir:** W	**Veh Mnvr/Ped Actn:**			1		**Obj Strk:**					
198	**104783705**	1.817	06/11/2016 13:56	LEFT TURN, DIFFERENT ROADWAYS	$ 11000	0	0	0	0	1	1	1	1	0	3	1
Unit	**1 :** 4	**Alchl/Drgs:**	0	**Speed:** 10 MPH	**Dir:** N	**Veh Mnvr/Ped Actn:**			8		**Obj Strk:**					
Unit	**2 :** 1	**Alchl/Drgs:**	0	**Speed:** 15 MPH	**Dir:** S	**Veh Mnvr/Ped Actn:**			8		**Obj Strk:**					
199	**104796995**	1.817	06/27/2016 14:27	BACKING UP	$ 4000	0	0	0	0	1	1	2	3	0	3	1
Unit	**1 :** 4	**Alchl/Drgs:**	0	**Speed:** 5 MPH	**Dir:** S	**Veh Mnvr/Ped Actn:**			10		**Obj Strk:**					
Unit	**2 :** 1	**Alchl/Drgs:**	0	**Speed:** 0 MPH	**Dir:** S	**Veh Mnvr/Ped Actn:**			1		**Obj Strk:**					
200	**104850593**	1.817	08/13/2016 23:23	RAN OFF ROAD - LEFT	$ 8000	0	0	0	1	1	4	1	1	0	3	1
Unit	**1 :** 2	**Alchl/Drgs:**	0	**Speed:** 50 MPH	**Dir:** W	**Veh Mnvr/Ped Actn:**			4		**Obj Strk:**					
201	**104875871**	1.817	09/09/2016 11:57	LEFT TURN, SAME ROADWAY	$ 6000	0	0	0	0	1	1	1	3	0	3	1
Unit	**1 :** 1	**Alchl/Drgs:**	0	**Speed:** 30 MPH	**Dir:** N	**Veh Mnvr/Ped Actn:**			8		**Obj Strk:**					
Unit	**2 :** 4	**Alchl/Drgs:**	0	**Speed:** 40 MPH	**Dir:** W	**Veh Mnvr/Ped Actn:**			4		**Obj Strk:**					

DRAFT

DocuSign Envelope ID: 5C03745C-4B01-4834-A65D-B77F558A4F46

North Carolina Department of Transportation
Traffic Engineering Accident Analysis System
Strip Analysis Report

Acc No	Crash ID	Milepost	Date	Accident Type	Total Damage	Injuries F	A	B	C	Condition R	L	W	Road Ch	Ci	Trfc Ctl Dv	Op
202	**104881609**	1.817	09/20/2016 23:53	ANGLE	$ 9000	0	0	0	0	1	4	1	1	0	3	1
Unit	**1 :** 1	**Alchl/Drgs:** 0	**Speed:** 50 MPH	**Dir:** W	**Veh Mnvr/Ped Actn:** 4	**Obj Strk:**										
Unit	**2 :** 2	**Alchl/Drgs:** 0	**Speed:** 50 MPH	**Dir:** S	**Veh Mnvr/Ped Actn:** 4	**Obj Strk:**										
203	**104893156**	1.817	10/07/2016 23:20	REAR END, SLOW OR STOP	$ 500	0	0	0	1	2	4	3	1	0	3	1
Unit	**1 :** 32	**Alchl/Drgs:** 7	**Speed:** 5 MPH	**Dir:** E	**Veh Mnvr/Ped Actn:** 4	**Obj Strk:**										
Unit	**2 :** 1	**Alchl/Drgs:** 0	**Speed:** 5 MPH	**Dir:** E	**Veh Mnvr/Ped Actn:** 4	**Obj Strk:**										
204	**104946836**	1.817	11/17/2016 20:37	LEFT TURN, DIFFERENT ROADWAYS	$ 6500	0	0	0	0	1	4	1	3	0	3	1
Unit	**1 :** 2	**Alchl/Drgs:** 0	**Speed:** 35 MPH	**Dir:** W	**Veh Mnvr/Ped Actn:** 4	**Obj Strk:**										
Unit	**2 :** 1	**Alchl/Drgs:** 0	**Speed:** 5 MPH	**Dir:** S	**Veh Mnvr/Ped Actn:** 8	**Obj Strk:**										
205	**104992118**	1.817	12/17/2016 12:17	REAR END, SLOW OR STOP	$ 15000	0	0	0	3	1	1	1	1	0	3	1
Unit	**1 :** 1	**Alchl/Drgs:** 0	**Speed:** 20 MPH	**Dir:** W	**Veh Mnvr/Ped Actn:** 11	**Obj Strk:**										
Unit	**2 :** 1	**Alchl/Drgs:** 0	**Speed:** 0 MPH	**Dir:** W	**Veh Mnvr/Ped Actn:** 1	**Obj Strk:**										
206	**104990555**	1.817	12/17/2016 17:01	REAR END, SLOW OR STOP	$ 11000	0	0	0	0	1	1	1	1	0		
Unit	**1 :** 2	**Alchl/Drgs:** 0	**Speed:** 20 MPH	**Dir:** E	**Veh Mnvr/Ped Actn:** 11	**Obj Strk:**										
Unit	**2 :** 4	**Alchl/Drgs:** 0	**Speed:** 0 MPH	**Dir:** E	**Veh Mnvr/Ped Actn:** 1	**Obj Strk:**										
207	**105007375**	1.817	01/21/2017 18:46	SIDESWIPE, SAME DIRECTION	$ 3250	0	0	0	0	2	4	1	3	0	3	1
Unit	**1 :** 4	**Alchl/Drgs:** 0	**Speed:** 5 MPH	**Dir:** E	**Veh Mnvr/Ped Actn:** 5	**Obj Strk:**										
Unit	**2 :** 1	**Alchl/Drgs:** 0	**Speed:** 35 MPH	**Dir:** E	**Veh Mnvr/Ped Actn:** 4	**Obj Strk:**										
208	**105023845**	1.817	01/31/2017 09:01	SIDESWIPE, SAME DIRECTION	$ 4500	0	0	0	0	1	1	1	1	0	3	1
Unit	**1 :** 1	**Alchl/Drgs:** 0	**Speed:** 20 MPH	**Dir:** W	**Veh Mnvr/Ped Actn:** 4	**Obj Strk:**										
Unit	**2 :** 4	**Alchl/Drgs:** 0	**Speed:** 15 MPH	**Dir:** W	**Veh Mnvr/Ped Actn:** 7	**Obj Strk:**										
209	**105023908**	1.817	02/01/2017 20:43	SIDESWIPE, SAME DIRECTION	$ 3500	0	0	0	0	1	4	1	1	0	3	1
Unit	**1 :** 1	**Alchl/Drgs:** 0	**Speed:** 15 MPH	**Dir:** W	**Veh Mnvr/Ped Actn:** 7	**Obj Strk:**										
Unit	**2 :** 1	**Alchl/Drgs:** 0	**Speed:** 15 MPH	**Dir:** W	**Veh Mnvr/Ped Actn:** 8	**Obj Strk:**										
210	**105020662**	1.817	02/14/2017 18:38	REAR END, SLOW OR STOP	$ 1250	0	0	0	0	1	5	1	3	0	3	1
Unit	**1 :** 4	**Alchl/Drgs:** 0	**Speed:** 15 MPH	**Dir:** W	**Veh Mnvr/Ped Actn:** 4	**Obj Strk:**										
Unit	**2 :** 1	**Alchl/Drgs:** 0	**Speed:** 0 MPH	**Dir:** W	**Veh Mnvr/Ped Actn:** 1	**Obj Strk:**										
Unit	**3 :** 2	**Alchl/Drgs:** 0	**Speed:** 0 MPH	**Dir:** W	**Veh Mnvr/Ped Actn:** 1	**Obj Strk:**										

DRAFT

DocuSign Envelope ID: 5C03745C-4B01-4834-A65D-B77F558A4F46

North Carolina Department of Transportation
Traffic Engineering Accident Analysis System
Strip Analysis Report

Acc No	Crash ID	Milepost	Date	Accident Type	Total Damage	Injuries F	A	B	C	Condition R	L	W	Road Ch	Ci	Trfc Ctl Dv	Op
211	**105036909**	1.817	03/03/2017 21:49	OTHER COLLISION WITH VEHICLE	$ 4000	0	0	0	0	1	4	1	2	0	3	1
Unit	**1 :** 1	**Alchl/Drgs:** 0	**Speed:** 5 MPH	**Dir:** NW	**Veh Mnvr/Ped Actn:** 9	**Obj Strk:**										
Unit	**2 :** 1	**Alchl/Drgs:** 0	**Speed:** 25 MPH	**Dir:** W	**Veh Mnvr/Ped Actn:** 4	**Obj Strk:**										
212	**105076410**	1.817	04/06/2017 21:07	LEFT TURN, SAME ROADWAY	$ 6250	0	0	0	0	2	4	3	3	0	3	1
Unit	**1 :** 32	**Alchl/Drgs:** 7	**Speed:** 5 MPH	**Dir:** E	**Veh Mnvr/Ped Actn:** 8	**Obj Strk:**										
Unit	**2 :** 1	**Alchl/Drgs:** 0	**Speed:** 40 MPH	**Dir:** W	**Veh Mnvr/Ped Actn:** 4	**Obj Strk:**										
Unit	**3 :** 1	**Alchl/Drgs:** 0	**Speed:** 0 MPH	**Dir:** E	**Veh Mnvr/Ped Actn:** 1	**Obj Strk:**										
213	**105094636**	1.817	04/30/2017 11:57	REAR END, SLOW OR STOP	$ 2200	0	0	0	0	1	1	1	1	0		2
Unit	**1 :** 1	**Alchl/Drgs:** 0	**Speed:** 10 MPH	**Dir:** N	**Veh Mnvr/Ped Actn:** 12	**Obj Strk:**										
Unit	**2 :** 4	**Alchl/Drgs:** 0	**Speed:** 0 MPH	**Dir:** N	**Veh Mnvr/Ped Actn:** 1	**Obj Strk:**										
214	**105100783**	1.817	05/06/2017 13:17	REAR END, SLOW OR STOP	$ 1100	0	0	0	0	2	1	3	1	0	3	1
Unit	**1 :** 2	**Alchl/Drgs:** 0	**Speed:** 1 MPH	**Dir:** S	**Veh Mnvr/Ped Actn:** 11	**Obj Strk:**										
Unit	**2 :** 5	**Alchl/Drgs:** 0	**Speed:** 0 MPH	**Dir:** S	**Veh Mnvr/Ped Actn:** 1	**Obj Strk:**										
215	**105204011**	1.817	08/15/2017 11:14	REAR END, SLOW OR STOP	$ 6000	0	0	0	0	1	1	1	1	0	0	
Unit	**1 :** 4	**Alchl/Drgs:** 0	**Speed:** 30 MPH	**Dir:** E	**Veh Mnvr/Ped Actn:** 4	**Obj Strk:**										
Unit	**2 :** 5	**Alchl/Drgs:** 0	**Speed:** 5 MPH	**Dir:** E	**Veh Mnvr/Ped Actn:** 11	**Obj Strk:**										
216	**105212918**	1.817	08/27/2017 10:05	REAR END, SLOW OR STOP	$ 600	0	0	0	0	1	1	2	3	0	3	1
Unit	**1 :** 1	**Alchl/Drgs:** 0	**Speed:** 5 MPH	**Dir:** E	**Veh Mnvr/Ped Actn:** 12	**Obj Strk:**										
Unit	**2 :** 1	**Alchl/Drgs:** 0	**Speed:** 0 MPH	**Dir:** E	**Veh Mnvr/Ped Actn:** 1	**Obj Strk:**										
217	**105231841**	1.817	08/31/2017 20:35	RIGHT TURN, DIFFERENT ROADWAYS	$ 550	0	0	0	0	2	5	2	3	0	1	1
Unit	**1 :** 1	**Alchl/Drgs:** 7	**Speed:** 5 MPH	**Dir:** E	**Veh Mnvr/Ped Actn:** 12	**Obj Strk:**										
Unit	**2 :** 4	**Alchl/Drgs:** 0	**Speed:** 0 MPH	**Dir:** S	**Veh Mnvr/Ped Actn:** 1	**Obj Strk:**										
218	**105221800**	1.817	09/01/2017 22:50	BACKING UP	$ 800	0	0	0	0	1	4	1	3	0	3	1
Unit	**1 :** 4	**Alchl/Drgs:** 7	**Speed:** 3 MPH	**Dir:** E	**Veh Mnvr/Ped Actn:** 10	**Obj Strk:**										
Unit	**2 :** 1	**Alchl/Drgs:** 0	**Speed:** 0 MPH	**Dir:** W	**Veh Mnvr/Ped Actn:** 1	**Obj Strk:**										
219	**105239254**	1.817	09/21/2017 21:04	LEFT TURN, DIFFERENT ROADWAYS	$ 7000	0	0	0	0	1	4	1	1	0	3	1
Unit	**1 :** 1	**Alchl/Drgs:** 0	**Speed:** 40 MPH	**Dir:** W	**Veh Mnvr/Ped Actn:** 4	**Obj Strk:**										
Unit	**2 :** 5	**Alchl/Drgs:** 0	**Speed:** 10 MPH	**Dir:** S	**Veh Mnvr/Ped Actn:** 8	**Obj Strk:**										

DRAFT

DocuSign Envelope ID: 5C03745C-4B01-4834-A65D-B77F558A4F46

North Carolina Department of Transportation
Traffic Engineering Accident Analysis System
Strip Analysis Report

Acc No	Crash ID	Milepost	Date	Accident Type	Total Damage	Injuries F	A	B	C	Condition R	L	W	Road Ch	Ci	Trfc Ctl Dv	Op
220	**105296028**	1.817	11/09/2017 16:47	REAR END, SLOW OR STOP	$ 2020	0	0	0	0	1	1	1	1	0	0	
Unit 1 : 4	**Alchl/Drgs:** 0	**Speed:** 10 MPH	**Dir:** SE	**Veh Mnvr/Ped Actn:** 7	**Obj Strk:**											
Unit 2 : 4	**Alchl/Drgs:** 0	**Speed:** 0 MPH	**Dir:** S	**Veh Mnvr/Ped Actn:** 1	**Obj Strk:**											
221	**105309260**	1.817	11/11/2017 13:00	REAR END, SLOW OR STOP	$ 1400	0	0	0	0	1	1	1	2	0	3	1
Unit 1 : 2	**Alchl/Drgs:** 0	**Speed:** 10 MPH	**Dir:** S	**Veh Mnvr/Ped Actn:** 4	**Obj Strk:**											
Unit 2 : 1	**Alchl/Drgs:** 0	**Speed:** 0 MPH	**Dir:** S	**Veh Mnvr/Ped Actn:** 1	**Obj Strk:**											
222	**105311388**	1.817	11/12/2017 12:06	SIDESWIPE, SAME DIRECTION	$ 500	0	0	0	0	1	1	1	3	0	3	1
Unit 1 : 32	**Alchl/Drgs:** 7	**Speed:** 30 MPH	**Dir:** N	**Veh Mnvr/Ped Actn:** 8	**Obj Strk:**											
Unit 2 : 1	**Alchl/Drgs:** 0	**Speed:** 30 MPH	**Dir:** E	**Veh Mnvr/Ped Actn:** 8	**Obj Strk:**											
223	**105336674**	1.817	12/06/2017 10:34	ANGLE	$ 2000	0	0	0	0	1	1	2	3	0	3	1
Unit 1 : 1	**Alchl/Drgs:** 0	**Speed:** 15 MPH	**Dir:** E	**Veh Mnvr/Ped Actn:** 8	**Obj Strk:**											
Unit 2 : 1	**Alchl/Drgs:** 0	**Speed:** 35 MPH	**Dir:** W	**Veh Mnvr/Ped Actn:** 4	**Obj Strk:**											
224	**105360864**	1.817	12/31/2017 17:48	REAR END, SLOW OR STOP	$ 1500	0	0	0	0	4	4	6	3	0	3	1
Unit 1 : 1	**Alchl/Drgs:** 0	**Speed:** 20 MPH	**Dir:** N	**Veh Mnvr/Ped Actn:** 11	**Obj Strk:**											
Unit 2 : 1	**Alchl/Drgs:** 7	**Speed:** 5 MPH	**Dir:** N	**Veh Mnvr/Ped Actn:** 11	**Obj Strk:**											
Unit 3 : 32	**Alchl/Drgs:** 7	**Speed:** 10 MPH	**Dir:** N	**Veh Mnvr/Ped Actn:** 11	**Obj Strk:**											
225	**105363003**	1.817	01/05/2018 19:15	REAR END, SLOW OR STOP	$ 505	0	0	0	0	1	4	1	3	0	3	1
Unit 1 : 32	**Alchl/Drgs:** 0	**Speed:** 5 MPH	**Dir:** W	**Veh Mnvr/Ped Actn:** 11	**Obj Strk:**											
Unit 2 : 4	**Alchl/Drgs:** 0	**Speed:** 0 MPH	**Dir:** W	**Veh Mnvr/Ped Actn:** 1	**Obj Strk:**											
226	**105386978**	1.817	02/04/2018 17:34	ANGLE	$ 6000	0	0	0	0	1	1	1	3	0	0	
Unit 1 : 1	**Alchl/Drgs:** 0	**Speed:** 5 MPH	**Dir:** S	**Veh Mnvr/Ped Actn:** 7	**Obj Strk:**											
Unit 2 : 1	**Alchl/Drgs:** 0	**Speed:** 10 MPH	**Dir:** S	**Veh Mnvr/Ped Actn:** 4	**Obj Strk:**											
227	**105399284**	1.817	02/10/2018 17:22	RIGHT TURN, DIFFERENT ROADWAYS	$ 1600	0	0	0	0	2	2	3	1	0	3	1
Unit 1 : 1	**Alchl/Drgs:** 0	**Speed:** 10 MPH	**Dir:** S	**Veh Mnvr/Ped Actn:** 7	**Obj Strk:**											
Unit 2 : 1	**Alchl/Drgs:** 0	**Speed:** 35 MPH	**Dir:** W	**Veh Mnvr/Ped Actn:** 4	**Obj Strk:**											
228	**105403385**	1.817	02/11/2018 22:56	ANGLE	$ 3000	0	0	1	0	1	5	1	3	0	3	1
Unit 1 : 1	**Alchl/Drgs:** 7	**Speed:** 40 MPH	**Dir:** W	**Veh Mnvr/Ped Actn:** 16	**Obj Strk:**											
Unit 2 : 1	**Alchl/Drgs:** 0	**Speed:** 0 MPH	**Dir:** S	**Veh Mnvr/Ped Actn:** 1	**Obj Strk:**											

DRAFT

DocuSign Envelope ID: 5C03745C-4B01-4834-A65D-B77F558A4F46

North Carolina Department of Transportation
Traffic Engineering Accident Analysis System
Strip Analysis Report

Acc No	Crash ID	Milepost	Date	Accident Type	Total Damage	Injuries F	A	B	C	Condition R	L	W	Road Ch	Ci	Trfc Ctl Dv	Op
229	**105423779**	1.817	03/02/2018 07:28	LEFT TURN, DIFFERENT ROADWAYS	$ 9800	0	0	0	1	1	1	1	1	0	3	1
Unit	**1 :** 1	**Alchl/Drgs:** 0	**Speed:** 45 MPH	**Dir:** E	**Veh Mnvr/Ped Actn:** 4	**Obj Strk:**										
Unit	**2 :** 1	**Alchl/Drgs:** 0	**Speed:** 5 MPH	**Dir:** N	**Veh Mnvr/Ped Actn:** 8	**Obj Strk:**										
Unit	**3 :** 1	**Alchl/Drgs:** 0	**Speed:** 0 MPH	**Dir:** W	**Veh Mnvr/Ped Actn:** 1	**Obj Strk:** 18										
230	**105431341**	1.817	03/11/2018 21:34	LEFT TURN, SAME ROADWAY	$ 2000	0	0	0	0	2	4	3	2	0	3	1
Unit	**1 :** 4	**Alchl/Drgs:** 0	**Speed:** 10 MPH	**Dir:** W	**Veh Mnvr/Ped Actn:** 7	**Obj Strk:**										
Unit	**2 :** 2	**Alchl/Drgs:** 0	**Speed:** 10 MPH	**Dir:** SW	**Veh Mnvr/Ped Actn:** 8	**Obj Strk:**										
231	**105442498**	1.817	03/28/2018 13:25	REAR END, SLOW OR STOP	$ 0	0	0	0	1	1	1	1	3	0	3	1
Unit	**1 :** 1	**Alchl/Drgs:** 0	**Speed:** 10 MPH	**Dir:** W	**Veh Mnvr/Ped Actn:** 11	**Obj Strk:**										
Unit	**2 :** 2	**Alchl/Drgs:** 0	**Speed:** 0 MPH	**Dir:** W	**Veh Mnvr/Ped Actn:** 1	**Obj Strk:**										
232	**105494581**	1.817	05/16/2018 08:30	SIDESWIPE, SAME DIRECTION	$ 1000	0	0	0	0	2	1	3	3	0	0	2
Unit	**1 :** 32	**Alchl/Drgs:** 7	**Speed:** 20 MPH	**Dir:** N	**Veh Mnvr/Ped Actn:** 7	**Obj Strk:**										
Unit	**2 :** 4	**Alchl/Drgs:** 0	**Speed:** 20 MPH	**Dir:** N	**Veh Mnvr/Ped Actn:** 4	**Obj Strk:**										
233	**105500475**	1.817	05/28/2018 16:19	REAR END, SLOW OR STOP	$ 2500	0	0	0	0	2	1	3	3	0	3	1
Unit	**1 :** 4	**Alchl/Drgs:** 0	**Speed:** 20 MPH	**Dir:** S	**Veh Mnvr/Ped Actn:** 11	**Obj Strk:**										
Unit	**2 :** 1	**Alchl/Drgs:** 0	**Speed:** 0 MPH	**Dir:** S	**Veh Mnvr/Ped Actn:** 1	**Obj Strk:**										
234	**105500752**	1.817	05/30/2018 10:21	REAR END, SLOW OR STOP	$ 1500	0	0	0	0	2	1	3	3	0	3	1
Unit	**1 :** 4	**Alchl/Drgs:** 0	**Speed:** 0 MPH	**Dir:** S	**Veh Mnvr/Ped Actn:** 4	**Obj Strk:**										
Unit	**2 :** 10	**Alchl/Drgs:** 0	**Speed:** 5 MPH	**Dir:** S	**Veh Mnvr/Ped Actn:** 1	**Obj Strk:**										
235	**105523103**	1.817	06/14/2018 12:48	LEFT TURN, SAME ROADWAY	$ 14000	0	0	0	0	1	1	1	3	0	3	1
Unit	**1 :** 1	**Alchl/Drgs:** 0	**Speed:** 10 MPH	**Dir:** S	**Veh Mnvr/Ped Actn:** 8	**Obj Strk:**										
Unit	**2 :** 1	**Alchl/Drgs:** 0	**Speed:** 45 MPH	**Dir:** E	**Veh Mnvr/Ped Actn:** 4	**Obj Strk:**										
236	**105540507**	1.817	06/29/2018 18:59	SIDESWIPE, SAME DIRECTION	$ 1000	0	0	0	0	1	1	1	1	0	3	1
Unit	**1 :** 32	**Alchl/Drgs:** 7	**Speed:** 15 MPH	**Dir:** SE	**Veh Mnvr/Ped Actn:** 8	**Obj Strk:**										
Unit	**2 :** 1	**Alchl/Drgs:** 0	**Speed:** 15 MPH	**Dir:** SE	**Veh Mnvr/Ped Actn:** 8	**Obj Strk:**										
237	**105592886**	1.817	08/27/2018 10:48	REAR END, SLOW OR STOP	$ 7000	0	0	0	0	1	1	1	3	0	3	1
Unit	**1 :** 2	**Alchl/Drgs:** 0	**Speed:** 0 MPH	**Dir:** E	**Veh Mnvr/Ped Actn:** 1	**Obj Strk:**										
Unit	**2 :** 4	**Alchl/Drgs:** 0	**Speed:** 0 MPH	**Dir:** NE	**Veh Mnvr/Ped Actn:** 1	**Obj Strk:**										

DRAFT

DocuSign Envelope ID: 5C03745C-4B01-4834-A65D-B77F558A4F46

North Carolina Department of Transportation
Traffic Engineering Accident Analysis System
Strip Analysis Report

Acc No	Crash ID	Milepost	Date	Accident Type	Total Damage	Injuries F	A	B	C	Condition R	L	W	Road Ch	Ci	Trfc Ctl Dv	Op
238	**105619338**	1.817	09/12/2018 20:12	ANGLE	$ 1800	0	0	0	0	1	4	1	2	0	3	1
Unit	**1 :** 1	**Alchl/Drgs:** 0	**Speed:** 10 MPH	**Dir:** W	**Veh Mnvr/Ped Actn:** 12	**Obj Strk:**										
Unit	**2 :** 1	**Alchl/Drgs:** 0	**Speed:** 20 MPH	**Dir:** S	**Veh Mnvr/Ped Actn:** 4	**Obj Strk:**										
239	**105644663**	1.817	10/07/2018 18:49	SIDESWIPE, SAME DIRECTION	$ 1000	0	0	0	0	1	1	1	1	0	0	2
Unit	**1 :** 4	**Alchl/Drgs:** 0	**Speed:** 10 MPH	**Dir:** N	**Veh Mnvr/Ped Actn:** 5	**Obj Strk:**										
Unit	**2 :** 1	**Alchl/Drgs:** 0	**Speed:** 10 MPH	**Dir:** N	**Veh Mnvr/Ped Actn:** 4	**Obj Strk:**										
240	**105667019**	1.817	10/24/2018 15:22	SIDESWIPE, OPPOSITE DIRECTION	$ 3000	0	0	0	0	1	1	1	1	0	3	1
Unit	**1 :** 2	**Alchl/Drgs:** 0	**Speed:** 15 MPH	**Dir:** S	**Veh Mnvr/Ped Actn:** 4	**Obj Strk:**										
Unit	**2 :** 5	**Alchl/Drgs:** 0	**Speed:** 25 MPH	**Dir:** W	**Veh Mnvr/Ped Actn:** 4	**Obj Strk:**										
241	**105696039**	1.817	11/16/2018 21:56	RIGHT TURN, SAME ROADWAY	$ 1500	0	0	0	0	1	4	1	1	0	3	1
Unit	**1 :** 32	**Alchl/Drgs:** 7	**Speed:** 15 MPH	**Dir:** SE	**Veh Mnvr/Ped Actn:** 12	**Obj Strk:**										
Unit	**2 :** 1	**Alchl/Drgs:** 0	**Speed:** 45 MPH	**Dir:** SE	**Veh Mnvr/Ped Actn:** 4	**Obj Strk:**										
242	**105705768**	1.817	11/22/2018 17:21	LEFT TURN, SAME ROADWAY	$ 5000	0	0	0	0	1	2	1	4	0	3	1
Unit	**1 :** 1	**Alchl/Drgs:** 0	**Speed:** 15 MPH	**Dir:** W	**Veh Mnvr/Ped Actn:** 9	**Obj Strk:**										
Unit	**2 :** 4	**Alchl/Drgs:** 0	**Speed:** 10 MPH	**Dir:** W	**Veh Mnvr/Ped Actn:** 12	**Obj Strk:**										
243	**105733923**	1.817	12/08/2018 00:19	RIGHT TURN, DIFFERENT ROADWAYS	$ 1500	0	0	0	0	2	5	2	1	10	3	1
Unit	**1 :** 4	**Alchl/Drgs:** 0	**Speed:** 20 MPH	**Dir:** S	**Veh Mnvr/Ped Actn:** 7	**Obj Strk:**										
Unit	**2 :** 1	**Alchl/Drgs:** 0	**Speed:** 45 MPH	**Dir:** S	**Veh Mnvr/Ped Actn:** 4	**Obj Strk:**										
244	**105742687**	1.817	12/26/2018 19:35	ANGLE	$ 3000	0	0	0	0	1	4	1	1	0	3	1
Unit	**1 :** 1	**Alchl/Drgs:** 7	**Speed:** 10 MPH	**Dir:** E	**Veh Mnvr/Ped Actn:** 8	**Obj Strk:**										
Unit	**2 :** 1	**Alchl/Drgs:** 0	**Speed:** 45 MPH	**Dir:** W	**Veh Mnvr/Ped Actn:** 4	**Obj Strk:**										
245	**105742795**	1.817	12/29/2018 20:06	RIGHT TURN, DIFFERENT ROADWAYS	$ 7500	0	0	0	1	1	4	2	2	0	3	1
Unit	**1 :** 1	**Alchl/Drgs:** 0	**Speed:** 15 MPH	**Dir:** S	**Veh Mnvr/Ped Actn:** 7	**Obj Strk:**										
Unit	**2 :** 1	**Alchl/Drgs:** 0	**Speed:** 40 MPH	**Dir:** W	**Veh Mnvr/Ped Actn:** 4	**Obj Strk:**										
246	**105750934**	1.817	01/08/2019 17:35	REAR END, SLOW OR STOP	$ 4000	0	0	0	0	1	1	1	1	0	12	1
Unit	**1 :** 1	**Alchl/Drgs:** 0	**Speed:** 45 MPH	**Dir:** NW	**Veh Mnvr/Ped Actn:** 4	**Obj Strk:**										
Unit	**2 :** 4	**Alchl/Drgs:** 0	**Speed:** 0 MPH	**Dir:** NW	**Veh Mnvr/Ped Actn:** 1	**Obj Strk:**										

DRAFT

DocuSign Envelope ID: 5C03745C-4B01-4834-A65D-B77F558A4F46

North Carolina Department of Transportation
Traffic Engineering Accident Analysis System
Strip Analysis Report

Acc No	Crash ID	Milepost	Date	Accident Type	Total Damage	Injuries F	A	B	C	Condition R	L	W	Road Ch	Ci	Trfc Ctl Dv	Op
247	**105788352**	1.817	02/22/2019 20:22	LEFT TURN, SAME ROADWAY	$ 1250	0	0	0	0	2	4	2	3	0	3	1
Unit	**1 :** 1	**Alchl/Drgs:** 0	**Speed:** 15 MPH	**Dir:** E	**Veh Mnvr/Ped Actn:** 8	**Obj Strk:**										
Unit	**2 :** 1	**Alchl/Drgs:** 0	**Speed:** 45 MPH	**Dir:** W	**Veh Mnvr/Ped Actn:** 4	**Obj Strk:**										
248	**105810839**	1.817	03/15/2019 10:36	LEFT TURN, SAME ROADWAY	$ 17000	0	0	1	1	2	1	3	3	0	3	1
Unit	**1 :** 3	**Alchl/Drgs:** 0	**Speed:** 40 MPH	**Dir:** W	**Veh Mnvr/Ped Actn:** 8	**Obj Strk:**										
Unit	**2 :** 2	**Alchl/Drgs:** 0	**Speed:** 45 MPH	**Dir:** W	**Veh Mnvr/Ped Actn:** 4	**Obj Strk:**										
Unit	**3 :** 4	**Alchl/Drgs:** 0	**Speed:** 0 MPH	**Dir:** S	**Veh Mnvr/Ped Actn:** 1	**Obj Strk:**										
249	**105847919**	1.817	04/10/2019 18:11	LEFT TURN, SAME ROADWAY	$ 6000	0	0	0	0	1	1	1	1	0	3	1
Unit	**1 :** 4	**Alchl/Drgs:** 0	**Speed:** 10 MPH	**Dir:** E	**Veh Mnvr/Ped Actn:** 8	**Obj Strk:**										
Unit	**2 :** 4	**Alchl/Drgs:** 0	**Speed:** 45 MPH	**Dir:** W	**Veh Mnvr/Ped Actn:** 4	**Obj Strk:**										
250	**105846872**	1.817	04/10/2019 19:18	LEFT TURN, SAME ROADWAY	$ 4000	0	0	0	0	1	1	1	1	0	3	1
Unit	**1 :** 2	**Alchl/Drgs:** 0	**Speed:** 45 MPH	**Dir:** W	**Veh Mnvr/Ped Actn:** 4	**Obj Strk:**										
Unit	**2 :** 1	**Alchl/Drgs:** 0	**Speed:** 10 MPH	**Dir:** E	**Veh Mnvr/Ped Actn:** 8	**Obj Strk:**										
251	**105899278**	1.817	06/01/2019 13:24	REAR END, SLOW OR STOP	$ 500	0	0	0	0	1	1	1	3	0	3	1
Unit	**1 :** 32	**Alchl/Drgs:** 7	**Speed:** 5 MPH	**Dir:** E	**Veh Mnvr/Ped Actn:** 11	**Obj Strk:**										
Unit	**2 :** 4	**Alchl/Drgs:** 0	**Speed:** 5 MPH	**Dir:** E	**Veh Mnvr/Ped Actn:** 11	**Obj Strk:**										
Unit	**3 :** 4	**Alchl/Drgs:** 0	**Speed:** 5 MPH	**Dir:** E	**Veh Mnvr/Ped Actn:** 11	**Obj Strk:**										
252	**105965476**	1.817	08/11/2019 21:30	REAR END, SLOW OR STOP	$ 7500	0	0	0	0	1	4	1	1	0	12	1
Unit	**1 :** 1	**Alchl/Drgs:** 0	**Speed:** 20 MPH	**Dir:** W	**Veh Mnvr/Ped Actn:** 4	**Obj Strk:**										
Unit	**2 :** 1	**Alchl/Drgs:** 0	**Speed:** 15 MPH	**Dir:** W	**Veh Mnvr/Ped Actn:** 11	**Obj Strk:**										
253	**105988816**	1.817	08/30/2019 17:22	REAR END, SLOW OR STOP	$ 1600	0	0	0	0	1	1	1	3	0	0	2
Unit	**1 :** 2	**Alchl/Drgs:** 0	**Speed:** 15 MPH	**Dir:** S	**Veh Mnvr/Ped Actn:** 11	**Obj Strk:**										
Unit	**2 :** 1	**Alchl/Drgs:** 0	**Speed:** 0 MPH	**Dir:** S	**Veh Mnvr/Ped Actn:** 1	**Obj Strk:**										
254	**106008628**	1.817	09/19/2019 16:30	RIGHT TURN, DIFFERENT ROADWAYS	$ 1000	0	0	0	0	1	1	2	1	0	0	2
Unit	**1 :** 11	**Alchl/Drgs:** 0	**Speed:** 5 MPH	**Dir:** SE	**Veh Mnvr/Ped Actn:** 7	**Obj Strk:**										
Unit	**2 :** 4	**Alchl/Drgs:** 0	**Speed:** 0 MPH	**Dir:** S	**Veh Mnvr/Ped Actn:** 1	**Obj Strk:**										
255	**106011306**	1.817	09/26/2019 09:41	ANGLE	$ 3000	0	0	0	0	1	1	1	1	0	3	1
Unit	**1 :** 4	**Alchl/Drgs:** 0	**Speed:** 15 MPH	**Dir:** S	**Veh Mnvr/Ped Actn:** 12	**Obj Strk:**										
Unit	**2 :** 4	**Alchl/Drgs:** 0	**Speed:** 45 MPH	**Dir:** E	**Veh Mnvr/Ped Actn:** 4	**Obj Strk:**										

DRAFT

DocuSign Envelope ID: 5C03745C-4B01-4834-A65D-B77F558A4F46

North Carolina Department of Transportation
Traffic Engineering Accident Analysis System
Strip Analysis Report

Acc No	Crash ID	Milepost	Date	Accident Type	Total Damage	Injuries F	A	B	C	Condition R	L	W	Road Ch	Ci	Trfc Ctl Dv	Op
256	**106022563**	1.817	10/05/2019 20:25	LEFT TURN, DIFFERENT ROADWAYS	$ 5000	0	0	0	0	2	4	2	1	0	3	1
Unit	**1 :** 4	**Alchl/Drgs:** 0	**Speed:** 35 MPH	**Dir:** E	**Veh Mnvr/Ped Actn:** 8			**Obj Strk:**								
Unit	**2 :** 4	**Alchl/Drgs:** 0	**Speed:** 20 MPH	**Dir:** E	**Veh Mnvr/Ped Actn:** 8			**Obj Strk:**								
257	**106040031**	1.817	10/15/2019 20:07	LEFT TURN, DIFFERENT ROADWAYS	$ 15000	0	0	0	0	1	4	1	1	0	3	1
Unit	**1 :** 1	**Alchl/Drgs:** 0	**Speed:** 40 MPH	**Dir:** E	**Veh Mnvr/Ped Actn:** 8			**Obj Strk:**								
Unit	**2 :** 1	**Alchl/Drgs:** 0	**Speed:** 40 MPH	**Dir:** W	**Veh Mnvr/Ped Actn:** 4			**Obj Strk:**								
258	**106096208**	1.817	11/20/2019 16:29	OTHER COLLISION WITH VEHICLE	$ 4000	0	0	0	0	1	1	1	1	0	3	1
Unit	**1 :** 1	**Alchl/Drgs:** 0	**Speed:** 15 MPH	**Dir:** E	**Veh Mnvr/Ped Actn:** 9			**Obj Strk:**								
Unit	**2 :** 4	**Alchl/Drgs:** 0	**Speed:** 10 MPH	**Dir:** W	**Veh Mnvr/Ped Actn:** 7			**Obj Strk:**								
259	**106104639**	1.817	11/28/2019 16:11	ANGLE	$ 4000	0	0	0	0	1	1	1	1	0	3	1
Unit	**1 :** 1	**Alchl/Drgs:** 0	**Speed:** 5 MPH	**Dir:** S	**Veh Mnvr/Ped Actn:** 9			**Obj Strk:**								
Unit	**2 :** 1	**Alchl/Drgs:** 0	**Speed:** 5 MPH	**Dir:** E	**Veh Mnvr/Ped Actn:** 7			**Obj Strk:**								
260	**106144858**	1.817	12/27/2019 20:28	RIGHT TURN, DIFFERENT ROADWAYS	$ 2000	0	0	0	0	1	4	1	1	0	14	1
Unit	**1 :** 1	**Alchl/Drgs:** 0	**Speed:** 35 MPH	**Dir:** W	**Veh Mnvr/Ped Actn:** 7			**Obj Strk:**								
Unit	**2 :** 1	**Alchl/Drgs:** 0	**Speed:** 40 MPH	**Dir:** W	**Veh Mnvr/Ped Actn:** 8			**Obj Strk:**								
261	**106154984**	1.817	01/02/2020 06:46	LEFT TURN, SAME ROADWAY	$ 1700	0	0	0	0	1	4	1	1	0	3	1
Unit	**1 :** 1	**Alchl/Drgs:** 0	**Speed:** 10 MPH	**Dir:** E	**Veh Mnvr/Ped Actn:** 9			**Obj Strk:**								
Unit	**2 :** 4	**Alchl/Drgs:** 0	**Speed:** 30 MPH	**Dir:** W	**Veh Mnvr/Ped Actn:** 4			**Obj Strk:**								
262	**106196488**	1.817	02/09/2020 20:26	ANGLE	$ 8000	0	0	0	1	1	4	1	1	0	3	1
Unit	**1 :** 1	**Alchl/Drgs:** 1	**Speed:** 15 MPH	**Dir:** S	**Veh Mnvr/Ped Actn:** 4			**Obj Strk:**								
Unit	**2 :** 1	**Alchl/Drgs:** 0	**Speed:** 40 MPH	**Dir:** W	**Veh Mnvr/Ped Actn:** 4			**Obj Strk:**								
263	**106201453**	1.817	02/14/2020 16:55	RIGHT TURN, DIFFERENT ROADWAYS	$ 1700	0	0	0	0	1	1	1	1	0	0	2
Unit	**1 :** 2	**Alchl/Drgs:** 0	**Speed:** 5 MPH	**Dir:** W	**Veh Mnvr/Ped Actn:** 9			**Obj Strk:**								
Unit	**2 :** 2	**Alchl/Drgs:** 0	**Speed:** 15 MPH	**Dir:** W	**Veh Mnvr/Ped Actn:** 7			**Obj Strk:**								
264	**106221427**	1.817	03/06/2020 18:12	RAN OFF ROAD - RIGHT	$ 2000	0	0	0	0	1	1	2	3	0	0	2
Unit	**1 :** 1	**Alchl/Drgs:** 0	**Speed:** 10 MPH	**Dir:** N	**Veh Mnvr/Ped Actn:** 7			**Obj Strk:** 58								

DRAFT

DocuSign Envelope ID: 5C03745C-4B01-4834-A65D-B77F558A4F46

North Carolina Department of Transportation
Traffic Engineering Accident Analysis System
Strip Analysis Report

Acc No	Crash ID	Milepost	Date	Accident Type	Total Damage	Injuries F	A	B	C	Condition R	L	W	Road Ch	Ci	Trfc Ctl Dv	Op
265	**106352396**	1.817	08/26/2020 09:17	LEFT TURN, SAME ROADWAY	$ 2200	0	0	0	0	1	1	1	3	0	3	1
Unit	**1 :** 2	**Alchl/Drgs:** 0	**Speed:** 15 MPH	**Dir:** W	**Veh Mnvr/Ped Actn:** 8	**Obj Strk:**										
Unit	**2 :** 1	**Alchl/Drgs:** 0	**Speed:** 15 MPH	**Dir:** E	**Veh Mnvr/Ped Actn:** 4	**Obj Strk:**										
266	**106360045**	1.817	09/09/2020 17:01	LEFT TURN, DIFFERENT ROADWAYS	$ 5000	0	0	0	0	1	1	2	1	0	3	1
Unit	**1 :** 1	**Alchl/Drgs:** 0	**Speed:** 25 MPH	**Dir:** E	**Veh Mnvr/Ped Actn:** 4	**Obj Strk:**										
Unit	**2 :** 1	**Alchl/Drgs:** 0	**Speed:** 5 MPH	**Dir:** N	**Veh Mnvr/Ped Actn:** 8	**Obj Strk:**										
267	**106366374**	1.817	09/17/2020 13:39	RIGHT TURN, DIFFERENT ROADWAYS	$ 3500	0	0	0	0	2	1	3		0		
Unit	**1 :** 4	**Alchl/Drgs:** 0	**Speed:** 0 MPH	**Dir:** S	**Veh Mnvr/Ped Actn:** 7	**Obj Strk:**										
Unit	**2 :** 2	**Alchl/Drgs:** 0	**Speed:** 0 MPH	**Dir:** W	**Veh Mnvr/Ped Actn:** 4	**Obj Strk:**										
268	**106372516**	1.817	09/29/2020 12:25	LEFT TURN, SAME ROADWAY	$ 5000	0	0	0	2	2	1	3		0		
Unit	**1 :** 4	**Alchl/Drgs:** 0	**Speed:** 0 MPH	**Dir:** W	**Veh Mnvr/Ped Actn:** 8	**Obj Strk:**										
Unit	**2 :** 4	**Alchl/Drgs:** 0	**Speed:** 0 MPH	**Dir:** E	**Veh Mnvr/Ped Actn:** 4	**Obj Strk:**										
269	**106386324**	1.817	10/10/2020 06:26	LEFT TURN, DIFFERENT ROADWAYS	$ 5500	0	0	0	0	2	4	3	3	0	3	1
Unit	**1 :** 1	**Alchl/Drgs:** 0	**Speed:** 30 MPH	**Dir:** E	**Veh Mnvr/Ped Actn:** 4	**Obj Strk:**										
Unit	**2 :** 1	**Alchl/Drgs:** 0	**Speed:** 20 MPH	**Dir:** SE	**Veh Mnvr/Ped Actn:** 8	**Obj Strk:**										
270	**106500671**	1.817	01/19/2021 11:11	REAR END, SLOW OR STOP	$ 1500	0	0	0	0	1	1	1	1	0	3	1
Unit	**1 :** 11	**Alchl/Drgs:** 0	**Speed:** 5 MPH	**Dir:** N	**Veh Mnvr/Ped Actn:** 12	**Obj Strk:**										
Unit	**2 :** 4	**Alchl/Drgs:** 0	**Speed:** 0 MPH	**Dir:** N	**Veh Mnvr/Ped Actn:** 1	**Obj Strk:**										
271	**106514001**	1.817	01/21/2021 16:21	LEFT TURN, DIFFERENT ROADWAYS	$ 2500	0	0	0	0	1	1	1	1	0	3	1
Unit	**1 :** 32	**Alchl/Drgs:** 0	**Speed:** 45 MPH	**Dir:** E	**Veh Mnvr/Ped Actn:** 4	**Obj Strk:**										
Unit	**2 :** 4	**Alchl/Drgs:** 0	**Speed:** 20 MPH	**Dir:** E	**Veh Mnvr/Ped Actn:** 4	**Obj Strk:**										
272	**106516922**	1.817	01/28/2021 16:11	LEFT TURN, SAME ROADWAY	$ 3000	0	0	0	0	1	1	1	3	0	0	
Unit	**1 :** 1	**Alchl/Drgs:** 0	**Speed:** 10 MPH	**Dir:** N	**Veh Mnvr/Ped Actn:** 8	**Obj Strk:**										
Unit	**2 :** 1	**Alchl/Drgs:** 0	**Speed:** 20 MPH	**Dir:** S	**Veh Mnvr/Ped Actn:** 4	**Obj Strk:**										
273	**106524310**	1.817	02/11/2021 21:43	PEDESTRIAN	$ 0	0	0	0	1	1	4	1	1	0	3	1
Unit	**1 :** 1	**Alchl/Drgs:** 7	**Speed:** 5 MPH	**Dir:** S	**Veh Mnvr/Ped Actn:** 7	**Obj Strk:** 14										
Unit	**2 :** 24	**Alchl/Drgs:** 0	**Speed:** 0 MPH	**Dir:**	**Veh Mnvr/Ped Actn:**	**Obj Strk:** 14										

DRAFT

DocuSign Envelope ID: 5C03745C-4B01-4834-A65D-B77F558A4F46

North Carolina Department of Transportation
Traffic Engineering Accident Analysis System
Strip Analysis Report

Acc No	Crash ID	Milepost	Date	Accident Type	Total Damage	Injuries F	A	B	C	Condition R	L	W	Road Ch	Ci	Trfc Ctl Dv	Op
274	**105296041**	1.822	11/07/2017 16:49	REAR END, SLOW OR STOP	$ 2650	0	0	0	0	1	1	2	1	0		2
Unit 1 : 1	**Alchl/Drgs:** 0	**Speed:** 35 MPH	**Dir:** E	**Veh Mnvr/Ped Actn:** 11	**Obj Strk:**											
Unit 2 : 1	**Alchl/Drgs:** 0	**Speed:** 0 MPH	**Dir:** E	**Veh Mnvr/Ped Actn:** 1	**Obj Strk:**											
Unit 3 : 1	**Alchl/Drgs:** 0	**Speed:** 0 MPH	**Dir:** E	**Veh Mnvr/Ped Actn:** 1	**Obj Strk:**											
275	**104714353**	1.826	04/04/2016 18:48	REAR END, SLOW OR STOP	$ 4800	0	0	0	1	1	1	1	3	0	3	1
Unit 1 : 1	**Alchl/Drgs:** 0	**Speed:** 25 MPH	**Dir:** W	**Veh Mnvr/Ped Actn:** 4	**Obj Strk:**											
Unit 2 : 1	**Alchl/Drgs:** 0	**Speed:** 0 MPH	**Dir:** W	**Veh Mnvr/Ped Actn:** 1	**Obj Strk:**											
276	**105056925**	1.834	03/23/2017 11:46	REAR END, SLOW OR STOP	$ 1000	0	0	0	0	1	1	1	3	0		2
Unit 1 : 1	**Alchl/Drgs:** 7	**Speed:** 35 MPH	**Dir:** W	**Veh Mnvr/Ped Actn:** 11	**Obj Strk:**											
Unit 2 : 4	**Alchl/Drgs:** 0	**Speed:** 15 MPH	**Dir:** W	**Veh Mnvr/Ped Actn:** 11	**Obj Strk:**											
277	**106026561**	1.834	10/08/2019 15:19	SIDESWIPE, SAME DIRECTION	$ 5000	0	0	0	0	2	1	2	3	0	0	2
Unit 1 : 1	**Alchl/Drgs:** 0	**Speed:** 45 MPH	**Dir:** W	**Veh Mnvr/Ped Actn:** 5	**Obj Strk:**											
Unit 2 : 1	**Alchl/Drgs:** 0	**Speed:** 45 MPH	**Dir:** W	**Veh Mnvr/Ped Actn:** 4	**Obj Strk:**											
278	**104852052**	1.836	08/23/2016 07:31	RIGHT TURN, DIFFERENT ROADWAYS	$ 2000	0	0	0	2	1	1	1	1	0	3	1
Unit 1 : 1	**Alchl/Drgs:** 0	**Speed:** 15 MPH	**Dir:** W	**Veh Mnvr/Ped Actn:** 7	**Obj Strk:**											
Unit 2 : 5	**Alchl/Drgs:** 0	**Speed:** 35 MPH	**Dir:** W	**Veh Mnvr/Ped Actn:** 4	**Obj Strk:**											
279	**106546343**	1.836	03/11/2021 17:08	REAR END, SLOW OR STOP	$ 1500	0	0	0	0	1	1	1	3	0		
Unit 1 : 1	**Alchl/Drgs:** 0	**Speed:** 15 MPH	**Dir:** E	**Veh Mnvr/Ped Actn:** 4	**Obj Strk:**											
Unit 2 : 4	**Alchl/Drgs:** 0	**Speed:** 10 MPH	**Dir:** W	**Veh Mnvr/Ped Actn:** 4	**Obj Strk:**											
280	**104986846**	1.837	12/17/2016 16:11	REAR END, SLOW OR STOP	$ 1000	0	0	0	0	1	1	1	1	0		
Unit 1 : 4	**Alchl/Drgs:** 0	**Speed:** 15 MPH	**Dir:** E	**Veh Mnvr/Ped Actn:** 11	**Obj Strk:**											
Unit 2 : 1	**Alchl/Drgs:** 0	**Speed:** 0 MPH	**Dir:** E	**Veh Mnvr/Ped Actn:** 1	**Obj Strk:**											

Legend for Report Details:

Acc No - Accident Number
Injuries: F - Fatal, A - Class A, B - Class B, C - Class C
Condition: R - Road Surface, L - Ambient Light, W - Weather
Rd Ch - Road Character
Rd Ci - Roadway Contributing Circumstances
Trfc Ctl - Traffic Control: Dv - Device, Op - Operating
Alchl/Drgs - Alcohol Drugs Suspected
Veh Mnvr/Ped Actn - Vehicle Maneuver/Pedestrian Action
Obj Strk - Object Struck

DRAFT

DocuSign Envelope ID: 5C03745C-4B01-4834-A65D-B77F558A4F46

Summary Statistics

High Level Crash Summary

Crash Type	Number of Crashes	Percent of Total
Total Crashes	280	100.00
Fatal Crashes	0	0.00
Non-Fatal Injury Crashes	43	15.36
Total Injury Crashes	43	15.36
Property Damage Only Crashes	237	84.64
Night Crashes	70	25.00
Wet Crashes	49	17.50
Alcohol/Drugs Involvement Crashes	3	1.07

Crash Severity Summary

Crash Type	Number of Crashes	Percent of Total
Total Crashes	280	100.00
Fatal Crashes	0	0.00
Class A Crashes	2	0.71
Class B Crashes	7	2.50
Class C Crashes	34	12.14
Property Damage Only Crashes	237	84.64

Vehicle Exposure Statistics

Annual ADT = 24700

Total Length = 0.804 (Miles) **1.294 (Kilometers)**

Total Vehicle Exposure = 36.26 (MVMT) **58.36 (MVKMT)**

Crash Rate	Crashes Per 100 Million Vehicle Miles	Crashes Per 100 Million Vehicle Kilometers
Total Crash Rate	772.15	479.79
Fatal Crash Rate	0.00	0.00
Non Fatal Crash Rate	118.58	73.68
Night Crash Rate	193.04	119.95
Wet Crash Rate	135.13	83.96
EPDO Rate	2026.91	1259.46

DRAFT

All data presented in this report comes explicitly from the Traffic Engineering Accident Analysis System based upon va
criteria provided by the report's creator. The onus is strictly upon the user of this report to exercise due diligence in in
and further representing this data.

DocuSign Envelope ID: 5C03745C-4B01-4834-A65D-B77F558A4F46

Miscellaneous Statistics

Severity Index =	2.62
EPDO Crash Index =	735.00
Estimated Property Damage Total = $	1195070.00

Accident Type Summary

Accident Type	Number of Crashes	Percent of Total
ANGLE	11	3.93
ANIMAL	7	2.50
BACKING UP	5	1.79
FIXED OBJECT	12	4.29
HEAD ON	3	1.07
LEFT TURN, DIFFERENT ROADWAYS	18	6.43
LEFT TURN, SAME ROADWAY	24	8.57
OTHER COLLISION WITH VEHICLE	6	2.14
OVERTURN/ROLLOVER	1	0.36
PEDESTRIAN	1	0.36
RAN OFF ROAD - LEFT	1	0.36
RAN OFF ROAD - RIGHT	1	0.36
REAR END, SLOW OR STOP	116	41.43
REAR END, TURN	2	0.71
RIGHT TURN, DIFFERENT ROADWAYS	21	7.50
RIGHT TURN, SAME ROADWAY	2	0.71
SIDESWIPE, OPPOSITE DIRECTION	1	0.36
SIDESWIPE, SAME DIRECTION	48	17.14

Injury Summary

Injury Type	Number of Injuries	Percent of Total
Fatal Injuries	0	0.00
Class A Injuries	2	2.82
Class B Injuries	9	12.68
Class C Injuries	60	84.51
Total Non-Fatal Injuries	71	100.00
Total Injuries	71	100.00

DRAFT

All data presented in this report comes explicitly from the Traffic Engineering Accident Analysis System based upon va
criteria provided by the report's creator. The onus is strictly upon the user of this report to exercise due diligence in in
and further representing this data.

DocuSign Envelope ID: 5C03745C-4B01-4834-A65D-B77F558A4F46

Monthly Summary

Month	Number of Crashes	Percent of Total
Jan	23	8.21
Feb	22	7.86
Mar	19	6.79
Apr	21	7.50
May	19	6.79
Jun	25	8.93
Jul	16	5.71
Aug	29	10.36
Sep	25	8.93
Oct	28	10.00
Nov	21	7.50
Dec	32	11.43

Daily Summary

Day	Number of Crashes	Percent of Total
Mon	42	15.00
Tue	39	13.93
Wed	31	11.07
Thu	53	18.93
Fri	44	15.71
Sat	42	15.00
Sun	29	10.36

DRAFT

All data presented in this report comes explicitly from the Traffic Engineering Accident Analysis System based upon va
criteria provided by the report's creator. The onus is strictly upon the user of this report to exercise due diligence in in
and further representing this data.

DocuSign Envelope ID: 5C03745C-4B01-4834-A65D-B77F558A4F46

Hourly Summary

Hour	Number of Crashes	Percent of Total
0000-0059	4	1.43
0100-0159	0	0.00
0200-0259	1	0.36
0300-0359	2	0.71
0400-0459	2	0.71
0500-0559	1	0.36
0600-0659	4	1.43
0700-0759	16	5.71
0800-0859	14	5.00
0900-0959	16	5.71
1000-1059	12	4.29
1100-1159	17	6.07
1200-1259	18	6.43
1300-1359	27	9.64
1400-1459	13	4.64
1500-1559	17	6.07
1600-1659	19	6.79
1700-1759	24	8.57
1800-1859	20	7.14
1900-1959	11	3.93
2000-2059	23	8.21
2100-2159	13	4.64
2200-2259	3	1.07
2300-2359	3	1.07

DRAFT

All data presented in this report comes explicitly from the Traffic Engineering Accident Analysis System based upon va
criteria provided by the report's creator. The onus is strictly upon the user of this report to exercise due diligence in in
and further representing this data.

DocuSign Envelope ID: 5C03745C-4B01-4834-A65D-B77F558A4F46

Light and Road Conditions Summary

Condition	Dry	Wet	Other	Total
Day	170	32	0	202
Dark	51	16	3	70
Other	7	1	0	8
Total	228	49	3	280

Object Struck Summary

Object Type	Times Struck	Percent of Total
ANIMAL	7	29.17
BRIDGE RAIL FACE	2	8.33
DITCH	1	4.17
GUARDRAIL FACE ON SHOULDER	1	4.17
MOVABLE OBJECT	1	4.17
OFFICIAL HIGHWAY SIGN NON-BREAKAWAY	2	8.33
OTHER FIXED OBJECT	5	20.83
PEDESTRIAN	2	8.33
PIER ON SHOULDER OF UNDERPASS	1	4.17
TRAFFIC ISLAND CURB OR MEDIAN	1	4.17
TREE	1	4.17

Vehicle Type Summary

Vehicle Type	Number Involved	Percent of Total
LIGHT TRUCK (MINI-VAN, PANEL)	5	0.90
PASSENGER CAR	289	51.79
PEDESTRIAN	1	0.18
PICKUP	63	11.29
POLICE	2	0.36
SINGLE UNIT TRUCK (2-AXLE, 6-TIRE)	10	1.79
SINGLE UNIT TRUCK (3 OR MORE AXLES)	3	0.54
SPORT UTILITY	146	26.16
TRACTOR/SEMI-TRAILER	9	1.61
UNKNOWN	11	1.97
VAN	19	3.41

DRAFT

All data presented in this report comes explicitly from the Traffic Engineering Accident Analysis System based upon va
criteria provided by the report's creator. The onus is strictly upon the user of this report to exercise due diligence in in
and further representing this data.

DocuSign Envelope ID: 5C03745C-4B01-4834-A65D-B77F558A4F46

Yearly Totals Summary

Accident Totals

Year	Total Accidents	Fatal Accidents	Injury Accidents	Property Damage Only Accidents
2016	41	0	9	32
2017	45	0	2	43
2018	61	0	12	49
2019	67	0	13	54
2020	53	0	5	48
2021	13	0	2	11
Total	280	0	43	237

Injury Totals

Year	Fatal Injuries	Class A, B, or C Injuries
2016	0	15
2017	0	4
2018	0	18
2019	0	22
2020	0	9
2021	0	3
Total	0	71

Miscellaneous Totals

Year	Property Damage	EPDO Index
2016	$ 204470	107.60
2017	$ 193720	59.80
2018	$ 250955	149.80
2019	$ 294900	231.60
2020	$ 188325	90.00
2021	$ 62700	96.20
Total	$ 1195070	735.00

Type of Accident Totals

Year	Left Turn	Right Turn	Rear End	Run Off Road & Fixed Object	Angle	Side Swipe	Other
2016	6	4	17	3	2	6	3
2017	2	3	20	0	2	12	6

DRAFT

All data presented in this report comes explicitly from the Traffic Engineering Accident Analysis System based upon va
criteria provided by the report's creator. The onus is strictly upon the user of this report to exercise due diligence in in
and further representing this data.

DocuSign Envelope ID: 5C03745C-4B01-4834-A65D-B77F558A4F46

North Carolina Department of Transportation
Traffic Engineering Accident Analysis System
Strip Analysis Report

Year	Left Turn	Right Turn	Rear End	Run Off Road & Fixed Object	Angle	Side Swipe	Other
2018	12	8	23	1	4	10	3
2019	9	5	35	6	2	6	4
2020	11	3	18	3	1	13	4
2021	2	0	5	1	0	2	3
Total	42	23	118	14	11	49	23

DRAFT

All data presented in this report comes explicitly from the Traffic Engineering Accident Analysis System based upon va criteria provided by the report's creator. The onus is strictly upon the user of this report to exercise due diligence in in and further representing this data.

DocuSign Envelope ID: 5C03745C-4B01-4834-A65D-B77F558A4F46

Strip Diagram

Features	Milepost	Crash IDs
	1.04	
	1.05	
	1.06	106030093 | 105220559 | 105605021 | 105610477 | 105896203
SR 3501 | CLAYTON	1.07	104998190 | 105250833 | 105273410 | 105721454 | 105964144 | 106276481 | 106313928 | 106346914 | 106447396 | 106447126
	1.08	
	1.09	105945530
NC 146 WB COUPLET	1.10	
	1.11	106504933
	1.12	
	1.13	106070149
	1.14	
	1.15	
	1.16	
	1.17	105370810 | 106262662
	1.18	
	1.19	
	1.20	
	1.21	
	1.22	105464460
	1.23	
	1.24	106371585
	1.25	
	1.26	
	1.27	
	1.28	
	1.29	
	1.30	
	1.31	
	1.32	
	1.33	
	1.34	106453218 | 106498334
	1.35	
	1.36	
	1.37	
	1.38	
	1.39	
	1.40	
	1.41	
	1.42	105722958 | 105905018 | 106057127

DRAFT

All data presented in this report comes explicitly from the Traffic Engineering Accident Analysis System based upon va criteria provided by the report's creator. The onus is strictly upon the user of this report to exercise due diligence in in and further representing this data.

DocuSign Envelope ID: 5C03745C-4B01-4834-A65D-B77F558A4F46

North Carolina Department of Transportation
Traffic Engineering Accident Analysis System
Strip Analysis Report

Features	Milepost	Crash IDs
	1.43	105296733 | 105911004 | 106420647 | 106501490
SR 3498 | LEDBETTER	1.44	104760111 | 105087751 | 105371522 | 105391842 | 105450583 | 105460598 | 105488769 | 105559735 | 105777735 | 105804442 | 105822207 | 105844972 | 105893938 | 105992676 | 106001764 | 106030325 | 106035761 | 106102482 | 106174513 | 106209413 | 106306062 | 106320859 | 106427743 | 106418082 | 106436592 | 106440840 | 106469794 | 105963437 | 105391714
	1.45	
	1.46	105222532 | 106196829
	1.47	
	1.48	
	1.49	
	1.50	106059871
	1.51	
	1.52	
	1.53	104725761 | 104926337 | 105299278 | 105517372 | 105714903 | 106174660 | 106183331 | 106218128 | 106432377
	1.54	
Structure:100053	1.55	
	1.56	
	1.57	
	1.58	
	1.59	104920268 | 105172063 | 105725457 | 106466190
	1.60	104705823 | 104799030 | 104823960 | 104866435 | 104881048 | 104987913 | 105004942 | 105126214 | 105443702 | 105484774 | 105512365 | 105676685 | 105756834 | 105796843 | 105901332 | 105945677 | 105957474 | 106005107 | 106028521 | 106243525 | 106314004
	1.61	105098102 | 106020177
	1.62	105506096 | 106132408 | 106502040 | 105181580 | 105043612 | 106402751
I 26	1.63	104701102 | 104720209 | 104748280 | 104782267 | 104841193 | 104946085 | 105057165 | 105181734 | 105220454 | 105348389 | 105427418 | 105469835 | 105559657 | 105562046 | 105569733 | 105585889 | 105602034 | 105610550 | 105732770 | 105740746 | 105848172 | 105844522 | 105863582 | 105927869 | 105930278 | 105944080 | 106009622 | 106039411 |

DRAFT

All data presented in this report comes explicitly from the Traffic Engineering Accident Analysis System based upon va criteria provided by the report's creator. The onus is strictly upon the user of this report to exercise due diligence in in and further representing this data.

DocuSign Envelope ID: 5C03745C-4B01-4834-A65D-B77F558A4F46

North Carolina Department of Transportation
Traffic Engineering Accident Analysis System
Strip Analysis Report

Features	Milepost	Crash IDs
		106120929 | 106131251 | 106146757 | 106154230 |
		106280101 | 106285134 | 106308661 | 106338453 |
		106364738 | 106396371 | 106428071 | 106497573 |
		106430542 | 106456618 | 106490153 | 105890169
I 26 WB COUPLET	1.64	104955644 | 106295862 | 105143563
	1.65	105076428 | 105530806 | 105542801 | 105790203
	1.66	105099811 | 105356937 | 106469795
	1.67	
	1.68	
	1.69	
	1.70	
	1.71	104725476 | 104785616 | 104810842 | 104853757 |
		104890555 | 104955764 | 105000975 | 105411391 |
		105536869 | 105543974 | 105804849 | 105903344
	1.72	104874724 | 105475073 | 105942360 | 106118564 |
		106144945
	1.73	104891904 | 105497711 | 106137358
	1.74	104957419 | 105250094
	1.75	105664754
	1.76	
	1.77	
	1.78	105266413 | 105935665 | 106497233 | 106096263 |
		106286443
	1.79	104961567
	1.80	105475072 | 105900280 | 105923879 | 105976656
ML-ASHEVILLE | NC 146 WB COUPLET	1.81	
SCHENCK | SKYLAND INN	1.82	104750049 | 105213427 | 106185525 | 104731960 |
		104764041 | 104783705 | 104796995 | 104850593 |
		104875871 | 104881609 | 104893156 | 104946836 |
		104992118 | 104990555 | 105007375 | 105023845 |
		105023908 | 105020662 | 105036909 | 105076410 |
		105094636 | 105100783 | 105204011 | 105212918 |
		105231841 | 105221800 | 105239254 | 105296028 |
		105309260 | 105311388 | 105336674 | 105360864 |
		105363003 | 105386978 | 105399284 | 105403385 |
		105423779 | 105431341 | 105442498 | 105494581 |
		105500475 | 105500752 | 105523103 | 105540507 |
		105592886 | 105619338 | 105644663 | 105667019 |
		105696039 | 105705768 | 105733923 | 105742687 |
		105742795 | 105750934 | 105788352 | 105810839 |
		105847919 | 105846872 | 105899278 | 105965476 |
		105988816 | 106008628 | 106011306 | 106022563 |

DRAFT

All data presented in this report comes explicitly from the Traffic Engineering Accident Analysis System based upon va
criteria provided by the report's creator. The onus is strictly upon the user of this report to exercise due diligence in in
and further representing this data.

DocuSign Envelope ID: 5C03745C-4B01-4834-A65D-B77F558A4F46

North Carolina Department of Transportation
Traffic Engineering Accident Analysis System
Strip Analysis Report

Features	Milepost	Crash IDs
		106040031 | 106096208 | 106104639 | 106144858 |
		106154984 | 106196488 | 106201453 | 106221427 |
		106352396 | 106360045 | 106366374 | 106372516 |
		106386324 | 106500671 | 106514001 | 106516922 |
		106524310 | 105296041
	1.83	104714353 | 105056925 | 106026561
	1.84	104852052 | 106546343 | 104986846
	1.85	

DRAFT

All data presented in this report comes explicitly from the Traffic Engineering Accident Analysis System based upon va
criteria provided by the report's creator. The onus is strictly upon the user of this report to exercise due diligence in in
and further representing this data.

DocuSign Envelope ID: 5C03745C-4B01-4834-A65D-B77F558A4F46

North Carolina Department of Transportation
Traffic Engineering Accident Analysis System
Strip Analysis Report

Study Criteria Summary

County: BUNCOMBE **City:** All and Rural
Date: 04/01/2016 **to** 03/31/2021 **Study:** 41000064326
Location: NC 191 (Brevard Road) from Hampton Inn Suites/Petco Driveway(Wedgefield BLVD)* to Pine Lane/New I-26 westbound ramp*

Report Details

Acc No	Crash ID	Milepost	Date	Accident Type	Total Damage	Injuries F	A	B	C	Condition R	L	W	Road Ch	Ci	Trfc Ctl Dv	Op
1	**104943643**	7.615	10/06/2016 16:40	REAR END, SLOW OR STOP	$ 501	0	0	0	1	1	1	1	1	0		
Unit 1 : 1	**Alchl/Drgs:** 7	**Speed:** 5 MPH	**Dir:** N	**Veh Mnvr/Ped Actn:** 4	**Obj Strk:**											
Unit 2 : 1	**Alchl/Drgs:** 0	**Speed:** 0 MPH	**Dir:** N	**Veh Mnvr/Ped Actn:** 1	**Obj Strk:**											
2	**104796249**	7.629	07/08/2016 11:09	SIDESWIPE, SAME DIRECTION	$ 1500	0	0	0	0	1	1	2	1	0	0	
Unit 1 : 1	**Alchl/Drgs:** 0	**Speed:** 25 MPH	**Dir:** S	**Veh Mnvr/Ped Actn:** 4	**Obj Strk:**											
Unit 2 : 4	**Alchl/Drgs:** 0	**Speed:** 25 MPH	**Dir:** S	**Veh Mnvr/Ped Actn:** 4	**Obj Strk:**											
3	**105021574**	7.629	02/16/2017 17:33	SIDESWIPE, SAME DIRECTION	$ 6500	0	0	0	0	1	1	1	1	0		
Unit 1 : 4	**Alchl/Drgs:** 0	**Speed:** 5 MPH	**Dir:** W	**Veh Mnvr/Ped Actn:** 5	**Obj Strk:**											
Unit 2 : 4	**Alchl/Drgs:** 0	**Speed:** 5 MPH	**Dir:** W	**Veh Mnvr/Ped Actn:** 4	**Obj Strk:**											
4	**105742830**	7.634	12/28/2018 10:12	REAR END, SLOW OR STOP	$ 2500	0	0	0	0	1	1	1	1	0	12	1
Unit 1 : 1	**Alchl/Drgs:** 0	**Speed:** 20 MPH	**Dir:** NE	**Veh Mnvr/Ped Actn:** 11	**Obj Strk:**											
Unit 2 : 1	**Alchl/Drgs:** 0	**Speed:** 5 MPH	**Dir:** NE	**Veh Mnvr/Ped Actn:** 11	**Obj Strk:**											
5	**104749720**	7.638	05/14/2016 22:52	OTHER NON-COLLISION	$ 2000	0	0	0	0	1	4	1	3	0	3	1
Unit 1 : 1	**Alchl/Drgs:** 0	**Speed:** 35 MPH	**Dir:** S	**Veh Mnvr/Ped Actn:** 4	**Obj Strk:**											
Unit 2 : 1	**Alchl/Drgs:** 0	**Speed:** 10 MPH	**Dir:** S	**Veh Mnvr/Ped Actn:** 8	**Obj Strk:**											
6	**104771930**	7.638	06/07/2016 09:50	SIDESWIPE, SAME DIRECTION	$ 3500	0	0	0	0	1	1	1	1	0	3	1
Unit 1 : 5	**Alchl/Drgs:** 0	**Speed:** 20 MPH	**Dir:** W	**Veh Mnvr/Ped Actn:** 5	**Obj Strk:**											
Unit 2 : 4	**Alchl/Drgs:** 0	**Speed:** 20 MPH	**Dir:** W	**Veh Mnvr/Ped Actn:** 4	**Obj Strk:**											
7	**104810503**	7.638	07/14/2016 17:35	ANGLE	$ 5000	0	0	0	0	1	1	2	1	0	3	2
Unit 1 : 1	**Alchl/Drgs:** 0	**Speed:** 30 MPH	**Dir:** NE	**Veh Mnvr/Ped Actn:** 4	**Obj Strk:**											
Unit 2 : 4	**Alchl/Drgs:** 0	**Speed:** 15 MPH	**Dir:** S	**Veh Mnvr/Ped Actn:** 8	**Obj Strk:**											
8	**104844534**	7.638	08/10/2016 10:21	ANGLE	$ 2200	0	0	0	1	2	1	2	1	0	3	1
Unit 1 : 1	**Alchl/Drgs:** 0	**Speed:** 45 MPH	**Dir:** W	**Veh Mnvr/Ped Actn:** 4	**Obj Strk:**											

DRAFT

All data presented in this report comes explicitly from the Traffic Engineering Accident Analysis System based upon va criteria provided by the report's creator. The onus is strictly upon the user of this report to exercise due diligence in in and further representing this data.

DocuSign Envelope ID: 5C03745C-4B01-4834-A65D-B77F558A4F46

North Carolina Department of Transportation
Traffic Engineering Accident Analysis System
Strip Analysis Report

Acc No	Crash ID	Milepost	Date	Accident Type	Total Damage	Injuries F	A	B	C	Condition R	L	W	Road Ch	Ci	Trfc Ctl Dv	Op
Unit	**2 :** 5	**Alchl/Drgs:**	0	**Speed:** 10 MPH	**Dir:** S	**Veh Mnvr/Ped Actn:**				8			**Obj Strk:**			
9	**104844051**	7.638	08/13/2016 14:19	SIDESWIPE, SAME DIRECTION	$ 2250	0	0	0	0	1	1	2	1	0	3	1
Unit	**1 :** 4	**Alchl/Drgs:**	0	**Speed:** 35 MPH	**Dir:** W	**Veh Mnvr/Ped Actn:**				4			**Obj Strk:**			
Unit	**2 :** 4	**Alchl/Drgs:**	0	**Speed:** 5 MPH	**Dir:** W	**Veh Mnvr/Ped Actn:**				8			**Obj Strk:**			
10	**104859428**	7.638	08/27/2016 17:07	SIDESWIPE, SAME DIRECTION	$ 8000	0	0	0	2	1	1	1	1	0	3	1
Unit	**1 :** 1	**Alchl/Drgs:**	0	**Speed:** 15 MPH	**Dir:** S	**Veh Mnvr/Ped Actn:**				8			**Obj Strk:**			
Unit	**2 :** 4	**Alchl/Drgs:**	0	**Speed:** 45 MPH	**Dir:** E	**Veh Mnvr/Ped Actn:**				4			**Obj Strk:**			
11	**104943628**	7.638	11/11/2016 18:50	LEFT TURN, SAME ROADWAY	$ 1600	0	0	0	0	1	4	1	1	0	3	1
Unit	**1 :** 4	**Alchl/Drgs:**	0	**Speed:** 15 MPH	**Dir:** S	**Veh Mnvr/Ped Actn:**				8			**Obj Strk:**			
Unit	**2 :** 2	**Alchl/Drgs:**	0	**Speed:** 15 MPH	**Dir:** N	**Veh Mnvr/Ped Actn:**				4			**Obj Strk:**			
12	**104960107**	7.638	11/28/2016 22:12	REAR END, SLOW OR STOP	$ 400	0	0	0	1	2	4	3	2	0		1
Unit	**1 :** 2	**Alchl/Drgs:**	0	**Speed:** 35 MPH	**Dir:** E	**Veh Mnvr/Ped Actn:**				4			**Obj Strk:**			
Unit	**2 :** 26	**Alchl/Drgs:**	0	**Speed:** 0 MPH	**Dir:**	**Veh Mnvr/Ped Actn:**							**Obj Strk:**			
13	**104981118**	7.638	12/19/2016 23:03	LEFT TURN, SAME ROADWAY	$ 4800	0	0	0	0	1	4	1	1	0	3	1
Unit	**1 :** 2	**Alchl/Drgs:**	0	**Speed:** 15 MPH	**Dir:** W	**Veh Mnvr/Ped Actn:**				8			**Obj Strk:**			
Unit	**2 :** 1	**Alchl/Drgs:**	0	**Speed:** 35 MPH	**Dir:** S	**Veh Mnvr/Ped Actn:**				4			**Obj Strk:**			
14	**105043206**	7.638	03/12/2017 19:48	LEFT TURN, SAME ROADWAY	$ 11500	0	0	0	0	1	2	1	1	0	3	1
Unit	**1 :** 1	**Alchl/Drgs:**	0	**Speed:** 7 MPH	**Dir:** N	**Veh Mnvr/Ped Actn:**				9			**Obj Strk:**			
Unit	**2 :** 1	**Alchl/Drgs:**	0	**Speed:** 20 MPH	**Dir:** W	**Veh Mnvr/Ped Actn:**				4			**Obj Strk:**			
15	**105190282**	7.638	08/03/2017 20:53	LEFT TURN, SAME ROADWAY	$ 14500	0	0	0	0	1	4	1	1	0	3	1
Unit	**1 :** 1	**Alchl/Drgs:**	0	**Speed:** 10 MPH	**Dir:** SE	**Veh Mnvr/Ped Actn:**				8			**Obj Strk:**			
Unit	**2 :** 1	**Alchl/Drgs:**	0	**Speed:** 40 MPH	**Dir:** E	**Veh Mnvr/Ped Actn:**				4			**Obj Strk:**			
16	**105212220**	7.638	08/29/2017 15:06	REAR END, SLOW OR STOP	$ 8250	0	0	0	0	1	1	1	1	0	3	1
Unit	**1 :** 1	**Alchl/Drgs:**	0	**Speed:** 25 MPH	**Dir:** W	**Veh Mnvr/Ped Actn:**				4			**Obj Strk:**			
Unit	**2 :** 1	**Alchl/Drgs:**	0	**Speed:** 0 MPH	**Dir:** W	**Veh Mnvr/Ped Actn:**				1			**Obj Strk:**			
17	**105224772**	7.638	09/09/2017 13:25	SIDESWIPE, SAME DIRECTION	$ 4000	0	0	0	0	1	1	2	1	0	3	1
Unit	**1 :** 4	**Alchl/Drgs:**	0	**Speed:** 10 MPH	**Dir:** N	**Veh Mnvr/Ped Actn:**				5			**Obj Strk:**			
Unit	**2 :** 1	**Alchl/Drgs:**	0	**Speed:** 15 MPH	**Dir:** N	**Veh Mnvr/Ped Actn:**				4			**Obj Strk:**			

DRAFT

DocuSign Envelope ID: 5C03745C-4B01-4834-A65D-B77F558A4F46

North Carolina Department of Transportation
Traffic Engineering Accident Analysis System
Strip Analysis Report

Acc No	Crash ID	Milepost	Date	Accident Type	Total Damage	Injuries F	A	B	C	Condition R	L	W	Road Ch	Ci	Trfc Ctl Dv	Op
18	**105266341**	7.638	10/13/2017 20:54	LEFT TURN, SAME ROADWAY	$ 9000	0	0	0	1	1	4	1	1	4	3	1
Unit 1 : 1	**Alchl/Drgs:** 0	**Speed:** 40 MPH	**Dir:** W	**Veh Mnvr/Ped Actn:** 4	**Obj Strk:**											
Unit 2 : 2	**Alchl/Drgs:** 0	**Speed:** 20 MPH	**Dir:** E	**Veh Mnvr/Ped Actn:** 8	**Obj Strk:**											
19	**105281583**	7.638	10/30/2017 17:22	REAR END, SLOW OR STOP	$ 1000	0	0	0	0	1	1	1		0		
Unit 1 : 1	**Alchl/Drgs:** 0	**Speed:** 0 MPH	**Dir:** N	**Veh Mnvr/Ped Actn:** 4	**Obj Strk:**											
Unit 2 : 1	**Alchl/Drgs:** 0	**Speed:** 0 MPH	**Dir:** N	**Veh Mnvr/Ped Actn:** 1	**Obj Strk:**											
20	**105321455**	7.638	11/29/2017 13:47	REAR END, TURN	$ 1500	0	0	0	1	1	1	1	3	0	3	1
Unit 1 : 4	**Alchl/Drgs:** 0	**Speed:** 15 MPH	**Dir:** S	**Veh Mnvr/Ped Actn:** 12	**Obj Strk:**											
Unit 2 : 1	**Alchl/Drgs:** 0	**Speed:** 15 MPH	**Dir:** S	**Veh Mnvr/Ped Actn:** 12	**Obj Strk:**											
21	**105403312**	7.638	02/18/2018 08:55	LEFT TURN, DIFFERENT ROADWAYS	$ 2000	0	0	0	0	1	1	1	1	0	3	1
Unit 1 : 32	**Alchl/Drgs:** 7	**Speed:** 40 MPH	**Dir:** N	**Veh Mnvr/Ped Actn:** 4	**Obj Strk:**											
Unit 2 : 1	**Alchl/Drgs:** 0	**Speed:** 20 MPH	**Dir:** W	**Veh Mnvr/Ped Actn:** 8	**Obj Strk:**											
22	**105486898**	7.638	05/09/2018 20:23	SIDESWIPE, SAME DIRECTION	$ 2500	0	0	0	0	1	2	1	3	0	3	1
Unit 1 : 1	**Alchl/Drgs:** 0	**Speed:** 20 MPH	**Dir:** W	**Veh Mnvr/Ped Actn:** 5	**Obj Strk:**											
Unit 2 : 2	**Alchl/Drgs:** 0	**Speed:** 20 MPH	**Dir:** W	**Veh Mnvr/Ped Actn:** 4	**Obj Strk:**											
23	**105493562**	7.638	05/17/2018 17:02	SIDESWIPE, SAME DIRECTION	$ 2500	0	0	0	0	2	2	3	1	0	3	1
Unit 1 : 1	**Alchl/Drgs:** 0	**Speed:** 10 MPH	**Dir:** NW	**Veh Mnvr/Ped Actn:** 8	**Obj Strk:**											
Unit 2 : 1	**Alchl/Drgs:** 0	**Speed:** 10 MPH	**Dir:** NW	**Veh Mnvr/Ped Actn:** 8	**Obj Strk:**											
24	**105534707**	7.638	06/23/2018 07:50	ANGLE	$ 5000	0	0	0	0	1	1	1	1	0	3	1
Unit 1 : 4	**Alchl/Drgs:** 0	**Speed:** 20 MPH	**Dir:** N	**Veh Mnvr/Ped Actn:** 4	**Obj Strk:**											
Unit 2 : 1	**Alchl/Drgs:** 0	**Speed:** 20 MPH	**Dir:** SE	**Veh Mnvr/Ped Actn:** 4	**Obj Strk:**											
25	**105538974**	7.638	06/30/2018 20:59	ANGLE	$ 4000	0	0	0	0	1	4	1	1	0	3	2
Unit 1 : 1	**Alchl/Drgs:** 0	**Speed:** 15 MPH	**Dir:** SW	**Veh Mnvr/Ped Actn:** 4	**Obj Strk:**											
Unit 2 : 4	**Alchl/Drgs:** 0	**Speed:** 20 MPH	**Dir:** SW	**Veh Mnvr/Ped Actn:** 8	**Obj Strk:**											
26	**105573460**	7.638	07/29/2018 11:39	OTHER NON-COLLISION	$ 2000	0	0	0	1	1	1	1	1	0	12	1
Unit 1 : 20	**Alchl/Drgs:** 0	**Speed:** 15 MPH	**Dir:** E	**Veh Mnvr/Ped Actn:** 4	**Obj Strk:** 18											

DRAFT

DocuSign Envelope ID: 5C03745C-4B01-4834-A65D-B77F558A4F46

North Carolina Department of Transportation
Traffic Engineering Accident Analysis System
Strip Analysis Report

Acc No	Crash ID	Milepost	Date	Accident Type	Total Damage	Injuries F	A	B	C	Condition R	L	W	Road Ch	Ci	Trfc Ctl Dv	Op
27	**105597509**	7.638	08/24/2018 17:38	REAR END, SLOW OR STOP	$ 2500	0	0	0	0	1	1	1	3	0	3	2
Unit	**1 :** 2	**Alchl/Drgs:** 0	**Speed:** 20 MPH	**Dir:** N	**Veh Mnvr/Ped Actn:** 11	**Obj Strk:**										
Unit	**2 :** 5	**Alchl/Drgs:** 0	**Speed:** 0 MPH	**Dir:** N	**Veh Mnvr/Ped Actn:** 1	**Obj Strk:**										
28	**105606881**	7.638	09/09/2018 12:46	ANGLE	$ 7500	0	0	0	2	1	1	1	1	0	3	1
Unit	**1 :** 5	**Alchl/Drgs:** 0	**Speed:** 10 MPH	**Dir:** S	**Veh Mnvr/Ped Actn:** 8	**Obj Strk:**										
Unit	**2 :** 4	**Alchl/Drgs:** 0	**Speed:** 40 MPH	**Dir:** E	**Veh Mnvr/Ped Actn:** 4	**Obj Strk:**										
29	**105738890**	7.638	12/19/2018 12:32	ANGLE	$ 5500	0	0	0	1	1	1	1	1	0	3	1
Unit	**1 :** 1	**Alchl/Drgs:** 0	**Speed:** 45 MPH	**Dir:** E	**Veh Mnvr/Ped Actn:** 4	**Obj Strk:**										
Unit	**2 :** 1	**Alchl/Drgs:** 0	**Speed:** 20 MPH	**Dir:** S	**Veh Mnvr/Ped Actn:** 4	**Obj Strk:**										
30	**105795056**	7.638	03/01/2019 13:06	SIDESWIPE, SAME DIRECTION	$ 2500	0	0	0	0	2	1	3	1	0	3	1
Unit	**1 :** 1	**Alchl/Drgs:** 0	**Speed:** 10 MPH	**Dir:** N	**Veh Mnvr/Ped Actn:** 5	**Obj Strk:**										
Unit	**2 :** 2	**Alchl/Drgs:** 0	**Speed:** 5 MPH	**Dir:** N	**Veh Mnvr/Ped Actn:** 4	**Obj Strk:**										
31	**105814600**	7.638	03/18/2019 17:24	LEFT TURN, DIFFERENT ROADWAYS	$ 8500	0	0	0	1	1	1	1	1	0	3	1
Unit	**1 :** 1	**Alchl/Drgs:** 7	**Speed:** 35 MPH	**Dir:** NE	**Veh Mnvr/Ped Actn:** 4	**Obj Strk:**										
Unit	**2 :** 4	**Alchl/Drgs:** 0	**Speed:** 4 MPH	**Dir:** NW	**Veh Mnvr/Ped Actn:** 8	**Obj Strk:**										
32	**105828427**	7.638	03/29/2019 11:23	SIDESWIPE, SAME DIRECTION	$ 1600	0	0	0	0	1	1	1	1	0	0	
Unit	**1 :** 10	**Alchl/Drgs:** 0	**Speed:** 15 MPH	**Dir:** NE	**Veh Mnvr/Ped Actn:** 4	**Obj Strk:**										
Unit	**2 :** 1	**Alchl/Drgs:** 0	**Speed:** 10 MPH	**Dir:** NE	**Veh Mnvr/Ped Actn:** 5	**Obj Strk:**										
33	**105931020**	7.638	06/25/2019 14:31	REAR END, SLOW OR STOP	$ 2000	0	0	0	0	1	1	1	1	0	3	1
Unit	**1 :** 32	**Alchl/Drgs:** 7	**Speed:** 10 MPH	**Dir:** E	**Veh Mnvr/Ped Actn:** 4	**Obj Strk:**										
Unit	**2 :** 4	**Alchl/Drgs:** 0	**Speed:** 5 MPH	**Dir:** E	**Veh Mnvr/Ped Actn:** 11	**Obj Strk:**										
34	**105946175**	7.638	07/18/2019 17:25	REAR END, SLOW OR STOP	$ 1100	0	0	0	0	1	1	1	1	0	3	1
Unit	**1 :** 14	**Alchl/Drgs:** 0	**Speed:** 3 MPH	**Dir:** S	**Veh Mnvr/Ped Actn:** 4	**Obj Strk:**										
Unit	**2 :** 1	**Alchl/Drgs:** 0	**Speed:** 0 MPH	**Dir:** S	**Veh Mnvr/Ped Actn:** 1	**Obj Strk:**										
35	**105947469**	7.638	07/23/2019 15:11	REAR END, SLOW OR STOP	$ 4000	0	0	0	0	2	1	1	2	7	3	2
Unit	**1 :** 1	**Alchl/Drgs:** 0	**Speed:** 5 MPH	**Dir:** E	**Veh Mnvr/Ped Actn:** 11	**Obj Strk:**										
Unit	**2 :** 1	**Alchl/Drgs:** 0	**Speed:** 1 MPH	**Dir:** E	**Veh Mnvr/Ped Actn:** 11	**Obj Strk:**										

DRAFT

DocuSign Envelope ID: 5C03745C-4B01-4834-A65D-B77F558A4F46

North Carolina Department of Transportation
Traffic Engineering Accident Analysis System
Strip Analysis Report

Acc No	Crash ID	Milepost	Date	Accident Type	Total Damage	Injuries F	A	B	C	Condition R	L	W	Road Ch	Ci	Trfc Ctl Dv	Op
36	**105949549**	7.638	07/27/2019 13:23	SIDESWIPE, SAME DIRECTION	$ 4001	0	0	1	0	1	1	1	3	0	0	
Unit	**1 :** 1	**Alchl/Drgs:** 0	**Speed:** 40 MPH	**Dir:** N	**Veh Mnvr/Ped Actn:** 5	**Obj Strk:**										
Unit	**2 :** 1	**Alchl/Drgs:** 0	**Speed:** 40 MPH	**Dir:** N	**Veh Mnvr/Ped Actn:** 4	**Obj Strk:** 18										
37	**105976692**	7.638	08/21/2019 19:09	SIDESWIPE, SAME DIRECTION	$ 3000	0	0	0	0	1	1	1	1	0	3	1
Unit	**1 :** 1	**Alchl/Drgs:** 0	**Speed:** 15 MPH	**Dir:** S	**Veh Mnvr/Ped Actn:** 5	**Obj Strk:**										
Unit	**2 :** 1	**Alchl/Drgs:** 0	**Speed:** 15 MPH	**Dir:** S	**Veh Mnvr/Ped Actn:** 4	**Obj Strk:**										
38	**105988810**	7.638	09/03/2019 13:41	SIDESWIPE, SAME DIRECTION	$ 4000	0	0	0	0	1	1	1	1	0	3	1
Unit	**1 :** 1	**Alchl/Drgs:** 0	**Speed:** 10 MPH	**Dir:** N	**Veh Mnvr/Ped Actn:** 5	**Obj Strk:**										
Unit	**2 :** 1	**Alchl/Drgs:** 0	**Speed:** 5 MPH	**Dir:** N	**Veh Mnvr/Ped Actn:** 4	**Obj Strk:**										
39	**106144405**	7.638	12/14/2019 16:07	REAR END, SLOW OR STOP	$ 4000	0	0	0	0	1	1	1	1	0	3	1
Unit	**1 :** 1	**Alchl/Drgs:** 0	**Speed:** 3 MPH	**Dir:** E	**Veh Mnvr/Ped Actn:** 11	**Obj Strk:**										
Unit	**2 :** 1	**Alchl/Drgs:** 0	**Speed:** 0 MPH	**Dir:** E	**Veh Mnvr/Ped Actn:** 1	**Obj Strk:**										
40	**106237418**	7.638	02/15/2020 19:14	REAR END, SLOW OR STOP	$ 10500	0	0	0	0	1	4	1	1	0	3	1
Unit	**1 :** 32	**Alchl/Drgs:** 7	**Speed:** 35 MPH	**Dir:** N	**Veh Mnvr/Ped Actn:** 4	**Obj Strk:**										
Unit	**2 :** 1	**Alchl/Drgs:** 0	**Speed:** 0 MPH	**Dir:** N	**Veh Mnvr/Ped Actn:** 1	**Obj Strk:**										
Unit	**3 :** 1	**Alchl/Drgs:** 0	**Speed:** 0 MPH	**Dir:** N	**Veh Mnvr/Ped Actn:** 1	**Obj Strk:**										
41	**106202285**	7.638	02/15/2020 20:21	REAR END, SLOW OR STOP	$ 2000	0	0	0	0	1	4	1	7	0	3	1
Unit	**1 :** 32	**Alchl/Drgs:** 7	**Speed:** 10 MPH	**Dir:** NE	**Veh Mnvr/Ped Actn:** 4	**Obj Strk:**										
Unit	**2 :** 1	**Alchl/Drgs:** 0	**Speed:** 0 MPH	**Dir:** N	**Veh Mnvr/Ped Actn:** 1	**Obj Strk:**										
42	**106216959**	7.638	03/06/2020 06:41	LEFT TURN, DIFFERENT ROADWAYS	$ 11000	0	0	0	0	1	1	1	1	0	3	1
Unit	**1 :** 1	**Alchl/Drgs:** 0	**Speed:** 45 MPH	**Dir:** N	**Veh Mnvr/Ped Actn:** 4	**Obj Strk:**										
Unit	**2 :** 1	**Alchl/Drgs:** 0	**Speed:** 10 MPH	**Dir:** S	**Veh Mnvr/Ped Actn:** 8	**Obj Strk:**										
43	**106252064**	7.638	04/24/2020 12:05	LEFT TURN, DIFFERENT ROADWAYS	$ 3000	0	0	0	0	1	1	2	1	0	3	1
Unit	**1 :** 1	**Alchl/Drgs:** 0	**Speed:** 0 MPH	**Dir:** S	**Veh Mnvr/Ped Actn:** 4	**Obj Strk:**										
Unit	**2 :** 1	**Alchl/Drgs:** 0	**Speed:** 0 MPH	**Dir:** S	**Veh Mnvr/Ped Actn:** 8	**Obj Strk:**										
44	**106289824**	7.638	06/05/2020 12:26	REAR END, SLOW OR STOP	$ 2000	0	0	0	0	1	1	1	1	0	3	1
Unit	**1 :** 1	**Alchl/Drgs:** 0	**Speed:** 15 MPH	**Dir:** N	**Veh Mnvr/Ped Actn:** 4	**Obj Strk:**										
Unit	**2 :** 1	**Alchl/Drgs:** 0	**Speed:** 0 MPH	**Dir:** N	**Veh Mnvr/Ped Actn:** 1	**Obj Strk:**										

DRAFT

DocuSign Envelope ID: 5C03745C-4B01-4834-A65D-B77F558A4F46

North Carolina Department of Transportation
Traffic Engineering Accident Analysis System
Strip Analysis Report

Acc No	Crash ID	Milepost	Date	Accident Type	Total Damage	Injuries F	A	B	C	Condition R	L	W	Road Ch	Ci	Trfc Ctl Dv	Op
45	**106305284**	7.638	06/24/2020 02:00	REAR END, SLOW OR STOP	$ 1000	0	0	0	0	1	4	1	1	0	3	1
Unit	**1 :** 32	**Alchl/Drgs:** 0	**Speed:** 50 MPH	**Dir:** W	**Veh Mnvr/Ped Actn:** 5	**Obj Strk:**										
Unit	**2 :** 1	**Alchl/Drgs:** 0	**Speed:** 50 MPH	**Dir:** W	**Veh Mnvr/Ped Actn:** 4	**Obj Strk:**										
46	**106307791**	7.638	06/29/2020 21:11	ANGLE	$ 8000	0	0	0	2	1	4	1		0		
Unit	**1 :** 1	**Alchl/Drgs:** 0	**Speed:** 0 MPH	**Dir:** N	**Veh Mnvr/Ped Actn:** 4	**Obj Strk:**										
Unit	**2 :** 1	**Alchl/Drgs:** 0	**Speed:** 0 MPH	**Dir:** S	**Veh Mnvr/Ped Actn:** 8	**Obj Strk:**										
47	**106318954**	7.638	07/18/2020 14:04	REAR END, SLOW OR STOP	$ 3000	0	0	0	0	1	1	2	3	0	3	1
Unit	**1 :** 5	**Alchl/Drgs:** 0	**Speed:** 5 MPH	**Dir:** E	**Veh Mnvr/Ped Actn:** 12	**Obj Strk:**										
Unit	**2 :** 4	**Alchl/Drgs:** 0	**Speed:** 0 MPH	**Dir:** E	**Veh Mnvr/Ped Actn:** 1	**Obj Strk:**										
48	**106402005**	7.638	10/29/2020 20:17	LEFT TURN, DIFFERENT ROADWAYS	$ 12000	0	0	0	2	1	4	1	3	0	3	1
Unit	**1 :** 4	**Alchl/Drgs:** 0	**Speed:** 35 MPH	**Dir:** NW	**Veh Mnvr/Ped Actn:** 4	**Obj Strk:**										
Unit	**2 :** 1	**Alchl/Drgs:** 0	**Speed:** 15 MPH	**Dir:** NW	**Veh Mnvr/Ped Actn:** 8	**Obj Strk:**										
Unit	**3 :** 4	**Alchl/Drgs:** 0	**Speed:** 15 MPH	**Dir:** NW	**Veh Mnvr/Ped Actn:** 8	**Obj Strk:**										
49	**106434350**	7.638	11/24/2020 16:35	SIDESWIPE, SAME DIRECTION	$ 5000	0	0	0	0	1	1	1	3	0	0	
Unit	**1 :** 1	**Alchl/Drgs:** 0	**Speed:** 30 MPH	**Dir:** S	**Veh Mnvr/Ped Actn:** 5	**Obj Strk:**										
Unit	**2 :** 1	**Alchl/Drgs:** 0	**Speed:** 35 MPH	**Dir:** S	**Veh Mnvr/Ped Actn:** 4	**Obj Strk:**										
50	**106542915**	7.638	03/03/2021 19:10	RIGHT TURN, DIFFERENT ROADWAYS	$ 1100	0	0	0	0	1	2	1	1	0	3	1
Unit	**1 :** 1	**Alchl/Drgs:** 7	**Speed:** 20 MPH	**Dir:** W	**Veh Mnvr/Ped Actn:** 7	**Obj Strk:**										
Unit	**2 :** 4	**Alchl/Drgs:** 0	**Speed:** 0 MPH	**Dir:** E	**Veh Mnvr/Ped Actn:** 1	**Obj Strk:**										
51	**106569231**	7.638	03/31/2021 17:43	ANGLE	$ 300	0	0	0	0	2	2	2	1	0	3	1
Unit	**1 :** 32	**Alchl/Drgs:** 7	**Speed:** 30 MPH	**Dir:** N	**Veh Mnvr/Ped Actn:** 4	**Obj Strk:**										
Unit	**2 :** 4	**Alchl/Drgs:** 0	**Speed:** 20 MPH	**Dir:** W	**Veh Mnvr/Ped Actn:** 8	**Obj Strk:**										
52	**105760912**	7.647	01/26/2019 08:36	REAR END, SLOW OR STOP	$ 3000	0	0	0	0	1	1	1	1	0	0	
Unit	**1 :** 1	**Alchl/Drgs:** 0	**Speed:** 15 MPH	**Dir:** SW	**Veh Mnvr/Ped Actn:** 11	**Obj Strk:**										
Unit	**2 :** 1	**Alchl/Drgs:** 0	**Speed:** 5 MPH	**Dir:** SW	**Veh Mnvr/Ped Actn:** 11	**Obj Strk:**										
53	**105852329**	7.647	04/16/2019 12:42	REAR END, SLOW OR STOP	$ 3000	0	0	0	0	1	1	1	1	0		
Unit	**1 :** 1	**Alchl/Drgs:** 0	**Speed:** 25 MPH	**Dir:** W	**Veh Mnvr/Ped Actn:** 11	**Obj Strk:**										
Unit	**2 :** 1	**Alchl/Drgs:** 0	**Speed:** 24 MPH	**Dir:** W	**Veh Mnvr/Ped Actn:** 11	**Obj Strk:**										

DRAFT

DocuSign Envelope ID: 5C03745C-4B01-4834-A65D-B77F558A4F46

North Carolina Department of Transportation
Traffic Engineering Accident Analysis System
Strip Analysis Report

Acc No	Crash ID	Milepost	Date	Accident Type	Total Damage	Injuries F	A	B	C	Condition R	L	W	Road Ch	Ci	Trfc Ctl Dv	Op
54	**106386935**	7.677	10/12/2020 20:21	SIDESWIPE, SAME DIRECTION	$ 2000	0	0	0	0	1	4	1	1	0	0	
Unit 1 : 4	**Alchl/Drgs:** 0	**Speed:** 45 MPH	**Dir:** SW	**Veh Mnvr/Ped Actn:** 5	**Obj Strk:**											
Unit 2 : 1	**Alchl/Drgs:** 0	**Speed:** 45 MPH	**Dir:** SW	**Veh Mnvr/Ped Actn:** 4	**Obj Strk:**											
55	**105143601**	7.716	06/17/2017 17:01	REAR END, SLOW OR STOP	$ 2300	0	0	0	2	1	1	1	1	0	3	1
Unit 1 : 2	**Alchl/Drgs:** 0	**Speed:** 30 MPH	**Dir:** E	**Veh Mnvr/Ped Actn:** 11	**Obj Strk:**											
Unit 2 : 1	**Alchl/Drgs:** 0	**Speed:** 25 MPH	**Dir:** E	**Veh Mnvr/Ped Actn:** 11	**Obj Strk:**											
56	**105183803**	7.716	08/01/2017 23:34	OTHER NON-COLLISION	$ 1500	0	0	0	0	1	1	1	1	0	0	2
Unit 1 : 4	**Alchl/Drgs:** 0	**Speed:** 45 MPH	**Dir:** N	**Veh Mnvr/Ped Actn:** 4	**Obj Strk:**											
57	**105538983**	7.716	07/02/2018 14:05	SIDESWIPE, SAME DIRECTION	$ 1700	0	0	0	0	1	1	1	1	0	0	
Unit 1 : 4	**Alchl/Drgs:** 0	**Speed:** 30 MPH	**Dir:** NE	**Veh Mnvr/Ped Actn:** 5	**Obj Strk:**											
Unit 2 : 1	**Alchl/Drgs:** 0	**Speed:** 40 MPH	**Dir:** NE	**Veh Mnvr/Ped Actn:** 4	**Obj Strk:**											
58	**105717194**	7.716	11/29/2018 16:15	SIDESWIPE, SAME DIRECTION	$ 500	0	0	0	0	1	1	1	1	4	0	2
Unit 1 : 32	**Alchl/Drgs:** 7	**Speed:** 10 MPH	**Dir:** E	**Veh Mnvr/Ped Actn:** 4	**Obj Strk:**											
Unit 2 : 1	**Alchl/Drgs:** 0	**Speed:** 5 MPH	**Dir:** E	**Veh Mnvr/Ped Actn:** 4	**Obj Strk:**											
59	**105806127**	7.716	03/09/2019 18:20	REAR END, SLOW OR STOP	$ 1500	0	0	0	0	2	4	3	6	0	0	2
Unit 1 : 5	**Alchl/Drgs:** 0	**Speed:** 35 MPH	**Dir:** N	**Veh Mnvr/Ped Actn:** 4	**Obj Strk:**											
Unit 2 : 1	**Alchl/Drgs:** 0	**Speed:** 0 MPH	**Dir:** N	**Veh Mnvr/Ped Actn:** 1	**Obj Strk:**											
60	**106236910**	7.716	03/18/2020 05:33	FIXED OBJECT	$ 2000	0	0	0	0	1	5	1	1	0	0	2
Unit 1 : 2	**Alchl/Drgs:** 0	**Speed:** 5 MPH	**Dir:** N	**Veh Mnvr/Ped Actn:** 16	**Obj Strk:** 64											
61	**106232497**	7.716	05/21/2020 12:08	REAR END, SLOW OR STOP	$ 4300	0	0	0	0	1	1	2	3	0	14	1
Unit 1 : 4	**Alchl/Drgs:** 0	**Speed:** 25 MPH	**Dir:** NE	**Veh Mnvr/Ped Actn:** 5	**Obj Strk:**											
Unit 2 : 2	**Alchl/Drgs:** 0	**Speed:** 10 MPH	**Dir:** NE	**Veh Mnvr/Ped Actn:** 1	**Obj Strk:**											
62	**106288841**	7.716	06/05/2020 11:24	REAR END, SLOW OR STOP	$ 2300	0	0	0	0	1	1	2	1	0	0	2
Unit 1 : 4	**Alchl/Drgs:** 0	**Speed:** 20 MPH	**Dir:** W	**Veh Mnvr/Ped Actn:** 4	**Obj Strk:**											
Unit 2 : 4	**Alchl/Drgs:** 0	**Speed:** 0 MPH	**Dir:** W	**Veh Mnvr/Ped Actn:** 11	**Obj Strk:**											
63	**106398659**	7.716	10/20/2020 10:24	REAR END, SLOW OR STOP	$ 1500	0	0	0	1	1	1	1	3	0	0	1
Unit 1 : 1	**Alchl/Drgs:** 0	**Speed:** 5 MPH	**Dir:** E	**Veh Mnvr/Ped Actn:** 11	**Obj Strk:**											

DRAFT

DocuSign Envelope ID: 5C03745C-4B01-4834-A65D-B77F558A4F46

North Carolina Department of Transportation
Traffic Engineering Accident Analysis System
Strip Analysis Report

Acc No	Crash ID	Milepost	Date	Accident Type	Total Damage	Injuries F	A	B	C	Condition R	L	W	Road Ch	Ci	Trfc Ctl Dv	Op
Unit	**2 :** 1	**Alchl/Drgs:**	0	**Speed:** 0 MPH	**Dir:** E	**Veh Mnvr/Ped Actn:**				4			**Obj Strk:**			
64	**106516917**	7.716	01/28/2021 16:53	SIDESWIPE, SAME DIRECTION	$ 600	0	0	0	0	1	1	1	1	0		
Unit	**1 :** 32	**Alchl/Drgs:**	7	**Speed:** 35 MPH	**Dir:** E	**Veh Mnvr/Ped Actn:**				5			**Obj Strk:**			
Unit	**2 :** 2	**Alchl/Drgs:**	0	**Speed:** 30 MPH	**Dir:** E	**Veh Mnvr/Ped Actn:**				4			**Obj Strk:**			
65	**105518029**	7.738	06/11/2018 14:55	REAR END, SLOW OR STOP	$ 3000	0	0	0	0	1	1	1	1	0	0	2
Unit	**1 :** 2	**Alchl/Drgs:**	0	**Speed:** 20 MPH	**Dir:** S	**Veh Mnvr/Ped Actn:**				4			**Obj Strk:**			
Unit	**2 :** 1	**Alchl/Drgs:**	0	**Speed:** 20 MPH	**Dir:** S	**Veh Mnvr/Ped Actn:**				4			**Obj Strk:**			
66	**106180032**	7.790	01/23/2020 14:54	REAR END, SLOW OR STOP	$ 2000	0	0	0	0	1	1	1	1	0		2
Unit	**1 :** 1	**Alchl/Drgs:**	0	**Speed:** 15 MPH	**Dir:** N	**Veh Mnvr/Ped Actn:**				4			**Obj Strk:**			
Unit	**2 :** 1	**Alchl/Drgs:**	0	**Speed:** 0 MPH	**Dir:** N	**Veh Mnvr/Ped Actn:**				4			**Obj Strk:**			
67	**104717692**	7.806	04/04/2016 09:50	REAR END, SLOW OR STOP	$ 1300	0	0	0	0	1	1	1	1	0	2	1
Unit	**1 :** 2	**Alchl/Drgs:**	0	**Speed:** 10 MPH	**Dir:** S	**Veh Mnvr/Ped Actn:**				7			**Obj Strk:**			
Unit	**2 :** 1	**Alchl/Drgs:**	0	**Speed:** 0 MPH	**Dir:** S	**Veh Mnvr/Ped Actn:**				7			**Obj Strk:**			
68	**104777758**	7.806	06/11/2016 15:20	REAR END, SLOW OR STOP	$ 1575	0	0	0	0	1	1	1	1	0	2	1
Unit	**1 :** 2	**Alchl/Drgs:**	0	**Speed:** 5 MPH	**Dir:** S	**Veh Mnvr/Ped Actn:**				4			**Obj Strk:**			
Unit	**2 :** 1	**Alchl/Drgs:**	0	**Speed:** 5 MPH	**Dir:** S	**Veh Mnvr/Ped Actn:**				11			**Obj Strk:**			
69	**104839588**	7.806	08/04/2016 15:38	REAR END, SLOW OR STOP	$ 1000	0	0	0	1	1	1	2	1	0	3	1
Unit	**1 :** 1	**Alchl/Drgs:**	0	**Speed:** 15 MPH	**Dir:** NW	**Veh Mnvr/Ped Actn:**				1			**Obj Strk:**			
Unit	**2 :** 4	**Alchl/Drgs:**	0	**Speed:** 0 MPH	**Dir:** NW	**Veh Mnvr/Ped Actn:**				1			**Obj Strk:**			
70	**104851233**	7.806	08/17/2016 14:13	REAR END, SLOW OR STOP	$ 2000	0	0	0	0	1	1	1	5	0	12	1
Unit	**1 :** 1	**Alchl/Drgs:**	0	**Speed:** 10 MPH	**Dir:** S	**Veh Mnvr/Ped Actn:**				4			**Obj Strk:**			
Unit	**2 :** 1	**Alchl/Drgs:**	0	**Speed:** 0 MPH	**Dir:** S	**Veh Mnvr/Ped Actn:**				1			**Obj Strk:**			
71	**105079541**	7.806	09/15/2016 19:59	REAR END, SLOW OR STOP	$ 1000	0	0	0	0	1	4	1	1	0	3	1
Unit	**1 :** 4	**Alchl/Drgs:**	0	**Speed:** 15 MPH	**Dir:** W	**Veh Mnvr/Ped Actn:**				11			**Obj Strk:**			
Unit	**2 :** 1	**Alchl/Drgs:**	0	**Speed:** 5 MPH	**Dir:** W	**Veh Mnvr/Ped Actn:**				11			**Obj Strk:**			
72	**105073037**	7.806	04/07/2017 16:17	REAR END, SLOW OR STOP	$ 2500	0	0	0	0	1	1	1	1	0		
Unit	**1 :** 1	**Alchl/Drgs:**	0	**Speed:** 45 MPH	**Dir:** S	**Veh Mnvr/Ped Actn:**				4			**Obj Strk:**			
Unit	**2 :** 4	**Alchl/Drgs:**	0	**Speed:** 0 MPH	**Dir:** S	**Veh Mnvr/Ped Actn:**				1			**Obj Strk:**			

DRAFT

DocuSign Envelope ID: 5C03745C-4B01-4834-A65D-B77F558A4F46

North Carolina Department of Transportation
Traffic Engineering Accident Analysis System
Strip Analysis Report

Acc No	Crash ID	Milepost	Date	Accident Type	Total Damage	Injuries F	A	B	C	Condition R	L	W	Road Ch	Ci	Trfc Ctl Dv	Op
73	**105073038**	7.806	04/07/2017 16:23	REAR END, SLOW OR STOP	$ 3200	0	0	0	0	1	1	1	1	0	0	
Unit 1 : 4	**Alchl/Drgs:** 0	**Speed:** 30 MPH	**Dir:** S	**Veh Mnvr/Ped Actn:** 4	**Obj Strk:**											
Unit 2 : 4	**Alchl/Drgs:** 0	**Speed:** 5 MPH	**Dir:** S	**Veh Mnvr/Ped Actn:** 4	**Obj Strk:**											
Unit 3 : 4	**Alchl/Drgs:** 0	**Speed:** 0 MPH	**Dir:** S	**Veh Mnvr/Ped Actn:** 1	**Obj Strk:**											
74	**105076031**	7.806	04/13/2017 13:09	REAR END, SLOW OR STOP	$ 4000	0	0	0	0	1	1	1	1	0		
Unit 1 : 32	**Alchl/Drgs:** 7	**Speed:** 10 MPH	**Dir:** N	**Veh Mnvr/Ped Actn:** 5	**Obj Strk:**											
Unit 2 : 1	**Alchl/Drgs:** 0	**Speed:** 10 MPH	**Dir:** N	**Veh Mnvr/Ped Actn:** 4	**Obj Strk:**											
75	**105080019**	7.806	04/19/2017 06:19	SIDESWIPE, SAME DIRECTION	$ 1500	0	0	0	0	2	3	3	1	0	3	1
Unit 1 : 10	**Alchl/Drgs:** 7	**Speed:** 20 MPH	**Dir:** S	**Veh Mnvr/Ped Actn:** 5	**Obj Strk:**											
Unit 2 : 1	**Alchl/Drgs:** 0	**Speed:** 15 MPH	**Dir:** S	**Veh Mnvr/Ped Actn:** 4	**Obj Strk:**											
76	**105109966**	7.806	05/16/2017 17:12	REAR END, SLOW OR STOP	$ 6000	0	0	1	0	1	1	1	3	0	2	1
Unit 1 : 2	**Alchl/Drgs:** 0	**Speed:** 35 MPH	**Dir:** S	**Veh Mnvr/Ped Actn:** 11	**Obj Strk:**											
Unit 2 : 1	**Alchl/Drgs:** 0	**Speed:** 0 MPH	**Dir:** S	**Veh Mnvr/Ped Actn:** 1	**Obj Strk:**											
77	**105271218**	7.806	10/18/2017 23:21	SIDESWIPE, SAME DIRECTION	$ 1950	0	0	0	0	1	4	1	1	0	3	1
Unit 1 : 1	**Alchl/Drgs:** 0	**Speed:** 35 MPH	**Dir:** NE	**Veh Mnvr/Ped Actn:** 4	**Obj Strk:**											
Unit 2 : 1	**Alchl/Drgs:** 0	**Speed:** 15 MPH	**Dir:** E	**Veh Mnvr/Ped Actn:** 8	**Obj Strk:**											
78	**105309256**	7.806	11/19/2017 12:45	REAR END, SLOW OR STOP	$ 5000	0	0	0	0	1	1	1	1	0	2	1
Unit 1 : 4	**Alchl/Drgs:** 0	**Speed:** 5 MPH	**Dir:** S	**Veh Mnvr/Ped Actn:** 12	**Obj Strk:**											
Unit 2 : 1	**Alchl/Drgs:** 0	**Speed:** 2 MPH	**Dir:** S	**Veh Mnvr/Ped Actn:** 11	**Obj Strk:**											
79	**105364034**	7.806	01/05/2018 08:25	REAR END, SLOW OR STOP	$ 1000	0	0	0	0	1	1	1	1	0	2	1
Unit 1 : 4	**Alchl/Drgs:** 0	**Speed:** 5 MPH	**Dir:** SE	**Veh Mnvr/Ped Actn:** 4	**Obj Strk:**											
Unit 2 : 5	**Alchl/Drgs:** 0	**Speed:** 0 MPH	**Dir:** SE	**Veh Mnvr/Ped Actn:** 1	**Obj Strk:**											
80	**105399272**	7.806	02/06/2018 17:13	REAR END, SLOW OR STOP	$ 1000	0	0	0	1	1	1	1		0		
Unit 1 : 4	**Alchl/Drgs:** 0	**Speed:** 0 MPH	**Dir:** W	**Veh Mnvr/Ped Actn:** 10	**Obj Strk:**											
Unit 2 : 2	**Alchl/Drgs:** 0	**Speed:** 0 MPH	**Dir:** E	**Veh Mnvr/Ped Actn:** 8	**Obj Strk:**											
81	**105431344**	7.806	03/08/2018 17:06	FIXED OBJECT	$ 1500	0	0	0	0	1	1	2	1	0	3	2
Unit 1 : 1	**Alchl/Drgs:** 0	**Speed:** 10 MPH	**Dir:** SW	**Veh Mnvr/Ped Actn:** 5	**Obj Strk:** 41											

DRAFT

DocuSign Envelope ID: 5C03745C-4B01-4834-A65D-B77F558A4F46

North Carolina Department of Transportation
Traffic Engineering Accident Analysis System
Strip Analysis Report

Acc No	Crash ID	Milepost	Date	Accident Type	Total Damage	Injuries F	A	B	C	Condition R	L	W	Road Ch	Ci	Trfc Ctl Dv	Op
82	**105435297**	7.806	03/16/2018 08:07	REAR END, SLOW OR STOP	$ 1450	0	0	0	0	1	1	1	1	0	2	1
Unit	**1 :** 5	**Alchl/Drgs:**	0	**Speed:** 10 MPH	**Dir:** SE	**Veh Mnvr/Ped Actn:**			4			**Obj Strk:**				
Unit	**2 :** 1	**Alchl/Drgs:**	0	**Speed:** 0 MPH	**Dir:** SE	**Veh Mnvr/Ped Actn:**			1			**Obj Strk:**				
83	**105504851**	7.806	06/01/2018 15:19	BACKING UP	$ 18000	0	0	0	0	1	1	1	3	0	3	1
Unit	**1 :** 5	**Alchl/Drgs:**	7	**Speed:** 5 MPH	**Dir:** W	**Veh Mnvr/Ped Actn:**			10			**Obj Strk:**				
Unit	**2 :** 1	**Alchl/Drgs:**	0	**Speed:** 0 MPH	**Dir:** W	**Veh Mnvr/Ped Actn:**			1			**Obj Strk:**				
84	**105543338**	7.806	06/25/2018 12:39	REAR END, SLOW OR STOP	$ 3000	0	0	0	0	1	1	1	1	0	0	
Unit	**1 :** 2	**Alchl/Drgs:**	7	**Speed:** 15 MPH	**Dir:** S	**Veh Mnvr/Ped Actn:**			4			**Obj Strk:**				
Unit	**2 :** 5	**Alchl/Drgs:**	0	**Speed:** 0 MPH	**Dir:** S	**Veh Mnvr/Ped Actn:**			1			**Obj Strk:**				
85	**105556257**	7.806	07/20/2018 18:06	REAR END, SLOW OR STOP	$ 1600	0	0	0	1	1	1	1	1	0	2	1
Unit	**1 :** 1	**Alchl/Drgs:**	0	**Speed:** 5 MPH	**Dir:** S	**Veh Mnvr/Ped Actn:**			4			**Obj Strk:**				
Unit	**2 :** 1	**Alchl/Drgs:**	0	**Speed:** 0 MPH	**Dir:** S	**Veh Mnvr/Ped Actn:**			1			**Obj Strk:**				
86	**105628023**	7.806	09/28/2018 21:32	LEFT TURN, SAME ROADWAY	$ 2500	0	0	0	0	1	4	1	1	0	3	1
Unit	**1 :** 1	**Alchl/Drgs:**	0	**Speed:** 35 MPH	**Dir:** NE	**Veh Mnvr/Ped Actn:**			8			**Obj Strk:**				
Unit	**2 :** 1	**Alchl/Drgs:**	0	**Speed:** 40 MPH	**Dir:** SW	**Veh Mnvr/Ped Actn:**			4			**Obj Strk:**				
87	**105705792**	7.806	11/20/2018 10:39	LEFT TURN, DIFFERENT ROADWAYS	$ 9000	0	0	0	1	1	1	1	1	0	3	1
Unit	**1 :** 4	**Alchl/Drgs:**	0	**Speed:** 10 MPH	**Dir:** SW	**Veh Mnvr/Ped Actn:**			8			**Obj Strk:**				
Unit	**2 :** 1	**Alchl/Drgs:**	0	**Speed:** 20 MPH	**Dir:** E	**Veh Mnvr/Ped Actn:**			4			**Obj Strk:**				
88	**105748606**	7.806	01/10/2019 17:51	REAR END, SLOW OR STOP	$ 1100	0	0	0	0	1	1	1	3	0		
Unit	**1 :** 2	**Alchl/Drgs:**	0	**Speed:** 10 MPH	**Dir:** W	**Veh Mnvr/Ped Actn:**			4			**Obj Strk:**				
Unit	**2 :** 1	**Alchl/Drgs:**	0	**Speed:** 0 MPH	**Dir:** W	**Veh Mnvr/Ped Actn:**			1			**Obj Strk:**				
89	**105758411**	7.806	01/19/2019 17:24	REAR END, SLOW OR STOP	$ 2000	0	0	0	0	2	1	3	1	0	3	1
Unit	**1 :** 32	**Alchl/Drgs:**	7	**Speed:** 15 MPH	**Dir:** SW	**Veh Mnvr/Ped Actn:**			11			**Obj Strk:**				
Unit	**2 :** 1	**Alchl/Drgs:**	0	**Speed:** 0 MPH	**Dir:** SW	**Veh Mnvr/Ped Actn:**			1			**Obj Strk:**				
90	**105814605**	7.806	03/13/2019 17:48	MOVABLE OBJECT	$ 11000	0	0	0	0	1	1	1	7	0	3	1
Unit	**1 :** 14	**Alchl/Drgs:**	0	**Speed:** 10 MPH	**Dir:** S	**Veh Mnvr/Ped Actn:**			7			**Obj Strk:**	18			

DRAFT

DocuSign Envelope ID: 5C03745C-4B01-4834-A65D-B77F558A4F46

North Carolina Department of Transportation
Traffic Engineering Accident Analysis System
Strip Analysis Report

Acc No	Crash ID	Milepost	Date	Accident Type	Total Damage	Injuries F	A	B	C	Condition R	L	W	Road Ch	Ci	Trfc Ctl Dv	Op
91	**105888743**	7.806	05/20/2019 07:33	REAR END, SLOW OR STOP	$ 2000	0	0	0	0	1	1	1	1	0	0	2
Unit	**1 :** 1	**Alchl/Drgs:** 0	**Speed:** 35 MPH	**Dir:** W	**Veh Mnvr/Ped Actn:** 5	**Obj Strk:**										
Unit	**2 :** 1	**Alchl/Drgs:** 0	**Speed:** 10 MPH	**Dir:** W	**Veh Mnvr/Ped Actn:** 11	**Obj Strk:**										
92	**105910260**	7.806	06/09/2019 18:14	REAR END, SLOW OR STOP	$ 4000	0	0	0	2	2	1	3	3	0	3	1
Unit	**1 :** 1	**Alchl/Drgs:** 0	**Speed:** 0 MPH	**Dir:** NE	**Veh Mnvr/Ped Actn:** 1	**Obj Strk:**										
Unit	**2 :** 1	**Alchl/Drgs:** 0	**Speed:** 0 MPH	**Dir:** NE	**Veh Mnvr/Ped Actn:** 1	**Obj Strk:**										
Unit	**3 :** 4	**Alchl/Drgs:** 0	**Speed:** 0 MPH	**Dir:** NE	**Veh Mnvr/Ped Actn:** 1	**Obj Strk:**										
93	**105946146**	7.806	07/18/2019 07:51	REAR END, SLOW OR STOP	$ 1850	0	0	0	0	1	1	1	1	0	3	1
Unit	**1 :** 1	**Alchl/Drgs:** 0	**Speed:** 5 MPH	**Dir:** E	**Veh Mnvr/Ped Actn:** 11	**Obj Strk:**										
Unit	**2 :** 1	**Alchl/Drgs:** 0	**Speed:** 0 MPH	**Dir:** E	**Veh Mnvr/Ped Actn:** 1	**Obj Strk:**										
94	**105959201**	7.806	08/09/2019 07:21	REAR END, SLOW OR STOP	$ 1500	0	0	0	0	1	1	1	1	0	0	
Unit	**1 :** 5	**Alchl/Drgs:** 0	**Speed:** 10 MPH	**Dir:** S	**Veh Mnvr/Ped Actn:** 4	**Obj Strk:**										
Unit	**2 :** 1	**Alchl/Drgs:** 0	**Speed:** 9 MPH	**Dir:** S	**Veh Mnvr/Ped Actn:** 11	**Obj Strk:**										
95	**106098963**	7.806	11/20/2019 06:58	LEFT TURN, DIFFERENT ROADWAYS	$ 100	0	0	0	0	1	1	2	3	0	3	1
Unit	**1 :** 1	**Alchl/Drgs:** 7	**Speed:** 5 MPH	**Dir:** E	**Veh Mnvr/Ped Actn:** 8	**Obj Strk:**										
Unit	**2 :** 1	**Alchl/Drgs:** 0	**Speed:** 0 MPH	**Dir:** W	**Veh Mnvr/Ped Actn:** 1	**Obj Strk:**										
96	**106144941**	7.806	12/27/2019 14:37	REAR END, SLOW OR STOP	$ 1200	0	0	0	0	1	1	2	3	0	3	1
Unit	**1 :** 1	**Alchl/Drgs:** 0	**Speed:** 15 MPH	**Dir:** S	**Veh Mnvr/Ped Actn:** 11	**Obj Strk:**										
Unit	**2 :** 4	**Alchl/Drgs:** 0	**Speed:** 0 MPH	**Dir:** S	**Veh Mnvr/Ped Actn:** 1	**Obj Strk:**										
97	**106259438**	7.806	06/17/2020 13:11	SIDESWIPE, SAME DIRECTION	$ 2600	0	0	0	0	1	1	2	1	0	3	1
Unit	**1 :** 12	**Alchl/Drgs:** 0	**Speed:** 0 MPH	**Dir:** W	**Veh Mnvr/Ped Actn:** 8	**Obj Strk:**										
Unit	**2 :** 1	**Alchl/Drgs:** 0	**Speed:** 0 MPH	**Dir:** W	**Veh Mnvr/Ped Actn:** 8	**Obj Strk:**										
98	**106389089**	7.806	10/19/2020 17:57	REAR END, SLOW OR STOP	$ 1500	0	0	0	0	1	1	1		0		
Unit	**1 :** 1	**Alchl/Drgs:** 0	**Speed:** 15 MPH	**Dir:** E	**Veh Mnvr/Ped Actn:** 7	**Obj Strk:**										
Unit	**2 :** 4	**Alchl/Drgs:** 0	**Speed:** 0 MPH	**Dir:** E	**Veh Mnvr/Ped Actn:** 1	**Obj Strk:**										
99	**106516796**	7.806	02/01/2021 15:36	REAR END, SLOW OR STOP	$ 1000	0	0	0	0	1	1	2		0		
Unit	**1 :** 2	**Alchl/Drgs:** 0	**Speed:** 0 MPH	**Dir:** S	**Veh Mnvr/Ped Actn:** 4	**Obj Strk:**										
Unit	**2 :** 1	**Alchl/Drgs:** 0	**Speed:** 0 MPH	**Dir:** S	**Veh Mnvr/Ped Actn:** 1	**Obj Strk:**										

DRAFT

DocuSign Envelope ID: 5C03745C-4B01-4834-A65D-B77F558A4F46

North Carolina Department of Transportation
Traffic Engineering Accident Analysis System
Strip Analysis Report

Acc No	Crash ID	Milepost	Date	Accident Type	Total Damage	Injuries F	A	B	C	Condition R	L	W	Road Ch	Ci	Trfc Ctl Dv	Op
100	**106154523**	7.816	12/05/2019 17:24	REAR END, SLOW OR STOP	$ 6000	0	0	0	0	1	2	1	1	0	0	
Unit	**1 :** 1	**Alchl/Drgs:** 0	**Speed:** 30 MPH	**Dir:** N	**Veh Mnvr/Ped Actn:** 11	**Obj Strk:**										
Unit	**2 :** 4	**Alchl/Drgs:** 0	**Speed:** 0 MPH	**Dir:** N	**Veh Mnvr/Ped Actn:** 1	**Obj Strk:**										
101	**105370324**	7.966	01/11/2018 07:34	REAR END, SLOW OR STOP	$ 2750	0	0	0	0	2	1	3	1	0	0	
Unit	**1 :** 4	**Alchl/Drgs:** 0	**Speed:** 45 MPH	**Dir:** N	**Veh Mnvr/Ped Actn:** 4	**Obj Strk:**										
Unit	**2 :** 1	**Alchl/Drgs:** 0	**Speed:** 0 MPH	**Dir:** N	**Veh Mnvr/Ped Actn:** 1	**Obj Strk:**										
Unit	**3 :** 1	**Alchl/Drgs:** 0	**Speed:** 0 MPH	**Dir:** N	**Veh Mnvr/Ped Actn:** 1	**Obj Strk:**										
102	**104818642**	7.974	07/17/2016 14:08	REAR END, SLOW OR STOP	$ 2900	0	0	0	2	1	1	1	1	0	0	1
Unit	**1 :** 1	**Alchl/Drgs:** 0	**Speed:** 30 MPH	**Dir:** S	**Veh Mnvr/Ped Actn:** 4	**Obj Strk:**										
Unit	**2 :** 1	**Alchl/Drgs:** 0	**Speed:** 0 MPH	**Dir:** S	**Veh Mnvr/Ped Actn:** 1	**Obj Strk:**										
103	**105597466**	8.000	08/24/2018 13:47	LEFT TURN, SAME ROADWAY	$ 1700	0	0	0	0	1	1	1	1	0	0	1
Unit	**1 :** 1	**Alchl/Drgs:** 0	**Speed:** 5 MPH	**Dir:** S	**Veh Mnvr/Ped Actn:** 9	**Obj Strk:**										
Unit	**2 :** 1	**Alchl/Drgs:** 0	**Speed:** 45 MPH	**Dir:** S	**Veh Mnvr/Ped Actn:** 4	**Obj Strk:**										
104	**104850576**	8.031	08/19/2016 12:50	ANGLE	$ 3500	0	0	0	0	1	1	1	1	0	1	1
Unit	**1 :** 4	**Alchl/Drgs:** 0	**Speed:** 5 MPH	**Dir:** SE	**Veh Mnvr/Ped Actn:** 8	**Obj Strk:**										
Unit	**2 :** 4	**Alchl/Drgs:** 0	**Speed:** 45 MPH	**Dir:** SW	**Veh Mnvr/Ped Actn:** 4	**Obj Strk:**										
105	**105695562**	8.031	11/18/2018 02:12	ANIMAL	$ 5000	0	0	0	0	1	4	1	1	0		2
Unit	**1 :** 1	**Alchl/Drgs:** 0	**Speed:** 35 MPH	**Dir:** S	**Veh Mnvr/Ped Actn:** 4	**Obj Strk:** 17										
106	**105963555**	8.031	08/12/2019 15:20	REAR END, SLOW OR STOP	$ 2000	0	0	0	0	1	1	1	1	0	3	1
Unit	**1 :** 11	**Alchl/Drgs:** 0	**Speed:** 15 MPH	**Dir:** W	**Veh Mnvr/Ped Actn:** 11	**Obj Strk:**										
Unit	**2 :** 1	**Alchl/Drgs:** 0	**Speed:** 10 MPH	**Dir:** W	**Veh Mnvr/Ped Actn:** 11	**Obj Strk:**										
107	**106172573**	8.031	01/20/2020 09:58	REAR END, SLOW OR STOP	$ 1800	0	0	0	0	1	1	1	1	0	3	1
Unit	**1 :** 1	**Alchl/Drgs:** 0	**Speed:** 10 MPH	**Dir:** W	**Veh Mnvr/Ped Actn:** 4	**Obj Strk:**										
Unit	**2 :** 1	**Alchl/Drgs:** 0	**Speed:** 0 MPH	**Dir:** W	**Veh Mnvr/Ped Actn:** 1	**Obj Strk:**										
108	**106187211**	8.031	01/28/2020 09:38	ANGLE	$ 15000	0	0	0	2	2	1	1	1	0	3	1
Unit	**1 :** 1	**Alchl/Drgs:** 0	**Speed:** 45 MPH	**Dir:** N	**Veh Mnvr/Ped Actn:** 4	**Obj Strk:**										
Unit	**2 :** 1	**Alchl/Drgs:** 0	**Speed:** 45 MPH	**Dir:** S	**Veh Mnvr/Ped Actn:** 4	**Obj Strk:**										

DRAFT

DocuSign Envelope ID: 5C03745C-4B01-4834-A65D-B77F558A4F46

North Carolina Department of Transportation
Traffic Engineering Accident Analysis System
Strip Analysis Report

Acc No	Crash ID	Milepost	Date	Accident Type	Total Damage	Injuries F	A	B	C	Condition R	L	W	Road Ch	Ci	Trfc Ctl Dv	Op
109	**106187514**	8.031	01/30/2020 11:40	LEFT TURN, DIFFERENT ROADWAYS	$ 9000	0	0	0	1	1	1	1	1	0	3	1
Unit	**1 :** 1	**Alchl/Drgs:** 0	**Speed:** 40 MPH	**Dir:** S	**Veh Mnvr/Ped Actn:** 4	**Obj Strk:**										
Unit	**2 :** 1	**Alchl/Drgs:** 0	**Speed:** 10 MPH	**Dir:** E	**Veh Mnvr/Ped Actn:** 1	**Obj Strk:**										
110	**106201448**	8.031	02/15/2020 13:10	REAR END, SLOW OR STOP	$ 2000	0	0	0	0	1	1	1	5	0	3	1
Unit	**1 :** 2	**Alchl/Drgs:** 0	**Speed:** 5 MPH	**Dir:** W	**Veh Mnvr/Ped Actn:** 4	**Obj Strk:**										
Unit	**2 :** 4	**Alchl/Drgs:** 0	**Speed:** 0 MPH	**Dir:** W	**Veh Mnvr/Ped Actn:** 1	**Obj Strk:**										
111	**106211888**	8.031	02/28/2020 08:40	REAR END, SLOW OR STOP	$ 3000	0	0	0	1	1	1	1	1	0	3	1
Unit	**1 :** 4	**Alchl/Drgs:** 0	**Speed:** 25 MPH	**Dir:** N	**Veh Mnvr/Ped Actn:** 11	**Obj Strk:**										
Unit	**2 :** 4	**Alchl/Drgs:** 0	**Speed:** 25 MPH	**Dir:** N	**Veh Mnvr/Ped Actn:** 11	**Obj Strk:**										
112	**106211889**	8.031	02/29/2020 07:25	REAR END, SLOW OR STOP	$ 4000	0	0	0	1	1	1	1	1	0	3	1
Unit	**1 :** 4	**Alchl/Drgs:** 0	**Speed:** 25 MPH	**Dir:** N	**Veh Mnvr/Ped Actn:** 11	**Obj Strk:**										
Unit	**2 :** 4	**Alchl/Drgs:** 0	**Speed:** 25 MPH	**Dir:** N	**Veh Mnvr/Ped Actn:** 11	**Obj Strk:**										
113	**106240646**	8.031	03/24/2020 16:49	REAR END, SLOW OR STOP	$ 9000	0	0	0	1	2	1	2	1	0	3	1
Unit	**1 :** 1	**Alchl/Drgs:** 7	**Speed:** 35 MPH	**Dir:** E	**Veh Mnvr/Ped Actn:** 4	**Obj Strk:**										
Unit	**2 :** 1	**Alchl/Drgs:** 0	**Speed:** 0 MPH	**Dir:** E	**Veh Mnvr/Ped Actn:** 1	**Obj Strk:**										
114	**106289814**	8.031	06/04/2020 07:22	SIDESWIPE, SAME DIRECTION	$ 8000	0	0	0	2	1	1	1	1	0	3	1
Unit	**1 :** 4	**Alchl/Drgs:** 0	**Speed:** 0 MPH	**Dir:** N	**Veh Mnvr/Ped Actn:** 9	**Obj Strk:**										
Unit	**2 :** 2	**Alchl/Drgs:** 0	**Speed:** 0 MPH	**Dir:** N	**Veh Mnvr/Ped Actn:** 4	**Obj Strk:**										
115	**106293988**	8.031	06/13/2020 16:16	REAR END, SLOW OR STOP	$ 13000	0	0	0	0	1	1	1	1	0	3	1
Unit	**1 :** 1	**Alchl/Drgs:** 0	**Speed:** 45 MPH	**Dir:** N	**Veh Mnvr/Ped Actn:** 11	**Obj Strk:**										
Unit	**2 :** 1	**Alchl/Drgs:** 0	**Speed:** 0 MPH	**Dir:** N	**Veh Mnvr/Ped Actn:** 1	**Obj Strk:**										
116	**106317992**	8.031	07/18/2020 11:29	SIDESWIPE, SAME DIRECTION	$ 4000	0	0	0	0	1	1	1	1	0	0	2
Unit	**1 :** 4	**Alchl/Drgs:** 0	**Speed:** 2 MPH	**Dir:** N	**Veh Mnvr/Ped Actn:** 5	**Obj Strk:**										
Unit	**2 :** 1	**Alchl/Drgs:** 0	**Speed:** 45 MPH	**Dir:** N	**Veh Mnvr/Ped Actn:** 4	**Obj Strk:**										
117	**106498949**	8.031	01/11/2021 16:58	SIDESWIPE, SAME DIRECTION	$ 3000	0	0	0	0	2	1	2	1	0	0	2
Unit	**1 :** 1	**Alchl/Drgs:** 0	**Speed:** 30 MPH	**Dir:** W	**Veh Mnvr/Ped Actn:** 4	**Obj Strk:**										
Unit	**2 :** 2	**Alchl/Drgs:** 0	**Speed:** 40 MPH	**Dir:** W	**Veh Mnvr/Ped Actn:** 4	**Obj Strk:**										

DRAFT

DocuSign Envelope ID: 5C03745C-4B01-4834-A65D-B77F558A4F46

North Carolina Department of Transportation
Traffic Engineering Accident Analysis System
Strip Analysis Report

Acc No	Crash ID	Milepost	Date	Accident Type	Total Damage	Injuries F	A	B	C	Condition R	L	W	Road Ch	Ci	Trfc Ctl Dv	Op
118	**106526536**	8.031	02/16/2021 12:27	ANGLE	$ 6000	0	0	0	1	1	1	2	7	0	0	
Unit 1 :	10	**Alchl/Drgs:**	0	**Speed:**	0 MPH	**Dir:**	S	**Veh Mnvr/Ped Actn:**	4		**Obj Strk:**	59				
Unit 2 :	5	**Alchl/Drgs:**	0	**Speed:**	0 MPH	**Dir:**	W	**Veh Mnvr/Ped Actn:**	4		**Obj Strk:**					
119	**106569955**	8.031	03/24/2021 15:36	SIDESWIPE, SAME DIRECTION	$ 3800	0	0	0	1	1	1	1	1	0	3	1
Unit 1 :	1	**Alchl/Drgs:**	0	**Speed:**	5 MPH	**Dir:**	N	**Veh Mnvr/Ped Actn:**	9		**Obj Strk:**					
Unit 2 :	1	**Alchl/Drgs:**	0	**Speed:**	25 MPH	**Dir:**	N	**Veh Mnvr/Ped Actn:**	8		**Obj Strk:**					

Legend for Report Details:

Acc No - Accident Number
Injuries: F - Fatal, A - Class A, B - Class B, C - Class C
Condition: R - Road Surface, L - Ambient Light, W - Weather
Rd Ch - Road Character
Rd Ci - Roadway Contributing Circumstances
Trfc Ctl - Traffic Control: Dv - Device, Op - Operating
Alchl/Drgs - Alcohol Drugs Suspected
Veh Mnvr/Ped Actn - Vehicle Maneuver/Pedestrian Action
Obj Strk - Object Struck

DRAFT

All data presented in this report comes explicitly from the Traffic Engineering Accident Analysis System based upon va criteria provided by the report's creator. The onus is strictly upon the user of this report to exercise due diligence in in and further representing this data.

DocuSign Envelope ID: 5C03745C-4B01-4834-A65D-B77F558A4F46

Summary Statistics

High Level Crash Summary

Crash Type	Number of Crashes	Percent of Total
Total Crashes	119	100.00
Fatal Crashes	0	0.00
Non-Fatal Injury Crashes	30	25.21
Total Injury Crashes	30	25.21
Property Damage Only Crashes	89	74.79
Night Crashes	19	15.97
Wet Crashes	14	11.76
Alcohol/Drugs Involvement Crashes	0	0.00

Crash Severity Summary

Crash Type	Number of Crashes	Percent of Total
Total Crashes	119	100.00
Fatal Crashes	0	0.00
Class A Crashes	0	0.00
Class B Crashes	2	1.68
Class C Crashes	28	23.53
Property Damage Only Crashes	89	74.79

Vehicle Exposure Statistics

Annual ADT = 19200

Total Length = 0.449 (Miles) **0.723 (Kilometers)**

Total Vehicle Exposure = 15.74 (MVMT) **25.33 (MVKMT)**

Crash Rate	Crashes Per 100 Million Vehicle Miles	Crashes Per 100 Million Vehicle Kilometers
Total Crash Rate	755.96	469.73
Fatal Crash Rate	0.00	0.00
Non Fatal Crash Rate	190.58	118.42
Night Crash Rate	120.70	75.00
Wet Crash Rate	88.94	55.26
EPDO Rate	2166.24	1346.04

DRAFT

All data presented in this report comes explicitly from the Traffic Engineering Accident Analysis System based upon va
criteria provided by the report's creator. The onus is strictly upon the user of this report to exercise due diligence in in
and further representing this data.

DocuSign Envelope ID: 5C03745C-4B01-4834-A65D-B77F558A4F46

Miscellaneous Statistics

Severity Index =	2.87
EPDO Crash Index =	341.00
Estimated Property Damage Total = $	454177.00

Accident Type Summary

Accident Type	Number of Crashes	Percent of Total
ANGLE	11	9.24
ANIMAL	1	0.84
BACKING UP	1	0.84
FIXED OBJECT	2	1.68
LEFT TURN, DIFFERENT ROADWAYS	8	6.72
LEFT TURN, SAME ROADWAY	7	5.88
MOVABLE OBJECT	1	0.84
OTHER NON-COLLISION	3	2.52
REAR END, SLOW OR STOP	58	48.74
REAR END, TURN	1	0.84
RIGHT TURN, DIFFERENT ROADWAYS	1	0.84
SIDESWIPE, SAME DIRECTION	25	21.01

Injury Summary

Injury Type	Number of Injuries	Percent of Total
Fatal Injuries	0	0.00
Class A Injuries	0	0.00
Class B Injuries	2	5.13
Class C Injuries	37	94.87
Total Non-Fatal Injuries	39	100.00
Total Injuries	39	100.00

DRAFT

All data presented in this report comes explicitly from the Traffic Engineering Accident Analysis System based upon va
criteria provided by the report's creator. The onus is strictly upon the user of this report to exercise due diligence in in
and further representing this data.

DocuSign Envelope ID: 5C03745C-4B01-4834-A65D-B77F558A4F46

Monthly Summary

Month	Number of Crashes	Percent of Total
Jan	11	9.24
Feb	10	8.40
Mar	14	11.76
Apr	7	5.88
May	6	5.04
Jun	17	14.29
Jul	12	10.08
Aug	14	11.76
Sep	5	4.20
Oct	8	6.72
Nov	9	7.56
Dec	6	5.04

Daily Summary

Day	Number of Crashes	Percent of Total
Mon	16	13.45
Tue	15	12.61
Wed	16	13.45
Thu	21	17.65
Fri	23	19.33
Sat	20	16.81
Sun	8	6.72

DRAFT

All data presented in this report comes explicitly from the Traffic Engineering Accident Analysis System based upon va
criteria provided by the report's creator. The onus is strictly upon the user of this report to exercise due diligence in in
and further representing this data.

DocuSign Envelope ID: 5C03745C-4B01-4834-A65D-B77F558A4F46

Hourly Summary

Hour	Number of Crashes	Percent of Total
0000-0059	0	0.00
0100-0159	0	0.00
0200-0259	2	1.68
0300-0359	0	0.00
0400-0459	0	0.00
0500-0559	1	0.84
0600-0659	3	2.52
0700-0759	7	5.88
0800-0859	5	4.20
0900-0959	4	3.36
1000-1059	4	3.36
1100-1159	6	5.04
1200-1259	10	8.40
1300-1359	9	7.56
1400-1459	9	7.56
1500-1559	8	6.72
1600-1659	10	8.40
1700-1759	18	15.13
1800-1859	4	3.36
1900-1959	5	4.20
2000-2059	7	5.88
2100-2159	2	1.68
2200-2259	2	1.68
2300-2359	3	2.52

DRAFT

All data presented in this report comes explicitly from the Traffic Engineering Accident Analysis System based upon va
criteria provided by the report's creator. The onus is strictly upon the user of this report to exercise due diligence in in
and further representing this data.

DocuSign Envelope ID: 5C03745C-4B01-4834-A65D-B77F558A4F46

Light and Road Conditions Summary

Condition	Dry	Wet	Other	Total
Day	84	9	0	93
Dark	17	2	0	19
Other	4	3	0	7
Total	105	14	0	119

Object Struck Summary

Object Type	Times Struck	Percent of Total
ANIMAL	1	14.29
EMBANKMENT	1	14.29
GUARDRAIL END ON SHOULDER	1	14.29
MOVABLE OBJECT	3	42.86
OTHER FIXED OBJECT	1	14.29

Vehicle Type Summary

Vehicle Type	Number Involved	Percent of Total
MOTORCYCLE	1	0.42
OTHER	1	0.42
PASSENGER CAR	133	56.12
PICKUP	22	9.28
SINGLE UNIT TRUCK (2-AXLE, 6-TIRE)	3	1.27
SINGLE UNIT TRUCK (3 OR MORE AXLES)	1	0.42
SPORT UTILITY	51	21.52
TRACTOR/SEMI-TRAILER	2	0.84
TRUCK/TRAILER	1	0.42
UNKNOWN	10	4.22
VAN	12	5.06

DRAFT

All data presented in this report comes explicitly from the Traffic Engineering Accident Analysis System based upon va
criteria provided by the report's creator. The onus is strictly upon the user of this report to exercise due diligence in in
and further representing this data.

DocuSign Envelope ID: 5C03745C-4B01-4834-A65D-B77F558A4F46

Yearly Totals Summary

Accident Totals

Year	Total Accidents	Fatal Accidents	Injury Accidents	Property Damage Only Accidents
2016	18	0	6	12
2017	17	0	4	13
2018	25	0	6	19
2019	24	0	3	21
2020	28	0	9	19
2021	7	0	2	5
Total	119	0	30	89

Injury Totals

Year	Fatal Injuries	Class A, B, or C Injuries
2016	0	8
2017	0	5
2018	0	7
2019	0	4
2020	0	13
2021	0	2
Total	0	39

Miscellaneous Totals

Year	Property Damage	EPDO Index
2016	$ 45026	62.40
2017	$ 84200	46.60
2018	$ 89700	69.40
2019	$ 74951	46.20
2020	$ 144500	94.60
2021	$ 15800	21.80
Total	$ 454177	341.00

Type of Accident Totals

Year	Left Turn	Right Turn	Rear End	Run Off Road & Fixed Object	Angle	Side Swipe	Other
2016	2	0	8	0	3	4	1
2017	3	0	9	0	0	4	1

DRAFT

All data presented in this report comes explicitly from the Traffic Engineering Accident Analysis System based upon va
criteria provided by the report's creator. The onus is strictly upon the user of this report to exercise due diligence in in
and further representing this data.

DocuSign Envelope ID: 5C03745C-4B01-4834-A65D-B77F558A4F46

North Carolina Department of Transportation
Traffic Engineering Accident Analysis System
Strip Analysis Report

Year	Left Turn	Right Turn	Rear End	Run Off Road & Fixed Object	Angle	Side Swipe	Other
2018	4	0	9	1	4	4	3
2019	2	0	16	0	0	5	1
2020	4	0	16	1	2	5	0
2021	0	1	1	0	2	3	0
Total	15	1	59	2	11	25	6

DRAFT

All data presented in this report comes explicitly from the Traffic Engineering Accident Analysis System based upon va criteria provided by the report's creator. The onus is strictly upon the user of this report to exercise due diligence in in and further representing this data.

DocuSign Envelope ID: 5C03745C-4B01-4834-A65D-B77F558A4F46

Strip Diagram

Features	Milepost	Crash IDs
150FT SW ROCKYRIDGE	7.61	104943643
	7.62	
	7.63	104796249 | 105021574 | 105742830
SR 3428 | SR 3429 | RAMP | ROCKY RIDGE	7.64	104749720 | 104771930 | 104810503 | 104844534 |
| WEDGEFIELD		104844051 | 104859428 | 104943628 | 104960107 |
		104981118 | 105043206 | 105190282 | 105212220 |
		105224772 | 105266341 | 105281583 | 105321455 |
		105403312 | 105486898 | 105493562 | 105534707 |
		105538974 | 105573460 | 105597509 | 105606881 |
		105738890 | 105795056 | 105814600 | 105828427 |
		105931020 | 105946175 | 105947469 | 105949549 |
		105976692 | 105988810 | 106144405 | 106237418 |
		106202285 | 106216959 | 106252064 | 106289824 |
		106305284 | 106307791 | 106318954 | 106402005 |
		106434350 | 106542915 | 106569231
	7.65	105760912 | 105852329
	7.66	
	7.67	
	7.68	106386935
	7.69	
	7.70	
	7.71	
I 26 | US 74 | STRUCTURE: 100171	7.72	105143601 | 105183803 | 105538983 | 105717194 |
		105806127 | 106236910 | 106232497 | 106288841 |
		106398659 | 106516917
I 26 WB COUPLET | US 74 WB COUPLET	7.73	
	7.74	105518029
	7.75	
	7.76	
	7.77	
	7.78	
	7.79	106180032
	7.80	
RAMP	7.81	104717692 | 104777758 | 104839588 | 104851233 |
		105079541 | 105073037 | 105073038 | 105076031 |
		105080019 | 105109966 | 105271218 | 105309256 |
		105364034 | 105399272 | 105431344 | 105435297 |
		105504851 | 105543338 | 105556257 | 105628023 |
		105705792 | 105748606 | 105758411 | 105814605 |
		105888743 | 105910260 | 105946146 | 105959201 |

DRAFT

DocuSign Envelope ID: 5C03745C-4B01-4834-A65D-B77F558A4F46

North Carolina Department of Transportation
Traffic Engineering Accident Analysis System
Strip Analysis Report

Features	Milepost	Crash IDs
		106098963 | 106144941 | 106259438 | 106389089 |
		106516796
	7.82	106154523
	7.83	
	7.84	
	7.85	
	7.86	
	7.87	
	7.88	
	7.89	
	7.90	
	7.91	
	7.92	
	7.93	
	7.94	
	7.95	
	7.96	
	7.97	105370324 | 104818642
	7.98	
	7.99	
	8.00	105597466
	8.01	
SR 3558	8.02	
PINE | NEW I26 RAMP	8.03	104850576 | 105695562 | 105963555 | 106172573 |
		106187211 | 106187514 | 106201448 | 106211888 |
		106211889 | 106240646 | 106289814 | 106293988 |
		106317992 | 106498949 | 106526536 | 106569955
	8.04	
	8.05	
150FT NE NEWI26RAMP	8.06	

DRAFT

All data presented in this report comes explicitly from the Traffic Engineering Accident Analysis System based upon va
criteria provided by the report's creator. The onus is strictly upon the user of this report to exercise due diligence in in
and further representing this data.

DocuSign Envelope ID: 5C03745C-4B01-4834-A65D-B77F558A4F46

North Carolina Department of Transportation
Traffic Engineering Accident Analysis System
Intersection Analysis Report

Study Criteria Summary

County: BUNCOMBE **City:** All and Rural
Date: 4/1/2016 **to** 3/31/2021 **Study:** 41000064491
Location: NC 191 (Brevard Rd.) at SR 3501 (Clayton Rd.)

Report Details

Acc No	Crash ID	Date	Accident Type	Total Damage	Injuries F	A	B	C	Condition R	L	W	Road Ch	Ci	Trfc Ctl Dv	Op
1	**104697914**	04/06/2016 16:30	REAR END, SLOW OR STOP	$ 3300	0	0	0	2	1	1	2	7	0	0	
Unit 1 : 4	**Alchl/Drgs:** 0	**Speed:** 0 MPH	**Dir:** S	**Veh Mnvr / Ped Actn:** 12	**Obj Strk:**										
Unit 2 : 4	**Alchl/Drgs:** 0	**Speed:** 0 MPH	**Dir:** S	**Veh Mnvr / Ped Actn:** 12	**Obj Strk:**										
2	**104776436**	06/23/2016 13:39	RIGHT TURN, DIFFERENT ROADWAYS	$ 1300	0	0	0	0	1	1	1	3	0	13	1
Unit 1 : 1	**Alchl/Drgs:** 1	**Speed:** 45 MPH	**Dir:** N	**Veh Mnvr / Ped Actn:** 7	**Obj Strk:**										
Unit 2 : 2	**Alchl/Drgs:** 0	**Speed:** 45 MPH	**Dir:** W	**Veh Mnvr / Ped Actn:** 1	**Obj Strk:**										
3	**104785864**	07/08/2016 12:06	REAR END, SLOW OR STOP	$ 2500	0	0	0	0	1	1	1	7	0	13	1
Unit 1 : 11	**Alchl/Drgs:** 0	**Speed:** 35 MPH	**Dir:** S	**Veh Mnvr / Ped Actn:** 4	**Obj Strk:**										
Unit 2 : 4	**Alchl/Drgs:** 0	**Speed:** 0 MPH	**Dir:** S	**Veh Mnvr / Ped Actn:** 1	**Obj Strk:**										
4	**104837332**	08/30/2016 08:23	REAR END, SLOW OR STOP	$ 1900	0	0	0	0	1	1	1	3	0	1	1
Unit 1 : 1	**Alchl/Drgs:** 0	**Speed:** 5 MPH	**Dir:** W	**Veh Mnvr / Ped Actn:** 4	**Obj Strk:**										
Unit 2 : 1	**Alchl/Drgs:** 0	**Speed:** 0 MPH	**Dir:** W	**Veh Mnvr / Ped Actn:** 1	**Obj Strk:**										
5	**104919389**	11/04/2016 16:25	LEFT TURN, DIFFERENT ROADWAYS	$ 1500	0	0	0	0	1	1	1	1	0	1	1
Unit 1 : 2	**Alchl/Drgs:** 0	**Speed:** 10 MPH	**Dir:** N	**Veh Mnvr / Ped Actn:** 8	**Obj Strk:**										
Unit 2 : 2	**Alchl/Drgs:** 0	**Speed:** 10 MPH	**Dir:** S	**Veh Mnvr / Ped Actn:** 7	**Obj Strk:**										
6	**104919964**	11/17/2016 07:50	REAR END, SLOW OR STOP	$ 25	0	0	0	0	1	1	1	3	0	1	1
Unit 1 : 1	**Alchl/Drgs:** 0	**Speed:** 0 MPH	**Dir:** W	**Veh Mnvr / Ped Actn:** 12	**Obj Strk:**										
Unit 2 : 1	**Alchl/Drgs:** 0	**Speed:** 0 MPH	**Dir:** W	**Veh Mnvr / Ped Actn:** 1	**Obj Strk:**										
7	**104919962**	11/17/2016 14:51	REAR END, SLOW OR STOP	$ 1300	0	0	0	0	1	1	1	7	0	13	1
Unit 1 : 1	**Alchl/Drgs:** 0	**Speed:** 45 MPH	**Dir:** S	**Veh Mnvr / Ped Actn:** 4	**Obj Strk:**										
Unit 2 : 1	**Alchl/Drgs:** 0	**Speed:** 0 MPH	**Dir:** S	**Veh Mnvr / Ped Actn:** 1	**Obj Strk:**										
8	**105005061**	02/10/2017 15:50	REAR END, SLOW OR STOP	$ 1400	0	0	0	0	1	1	1	7	0	13	1
Unit 1 : 1	**Alchl/Drgs:** 0	**Speed:** 35 MPH	**Dir:** S	**Veh Mnvr / Ped Actn:** 1	**Obj Strk:**										

DRAFT

All data presented in this report comes explicitly from the Traffic Engineering Accident Analysis System based upon various input criteria provided by the report's creator. The onus is strictly upon the user of this report to exercise due diligence in interpreting and further representing this data.

DocuSign Envelope ID: 5C03745C-4B01-4834-A65D-B77F558A4F46

North Carolina Department of Transportation
Traffic Engineering Accident Analysis System
Intersection Analysis Report

Acc No	Crash ID	Date	Accident Type	Total Damage	Injuries F	A	B	C	Condition R	L	W	Road Ch	Ci	Trfc Ctl Dv	Op
Unit	**2 :** 2	**Alchl/Drgs:** 0	**Speed:** 40 MPH	**Dir:** S	**Veh Mnvr / Ped Actn:** 4			**Obj Strk:**							
9	**105018327**	02/22/2017 12:36	REAR END, SLOW OR STOP	$ 8000	0	0	0	0	2	1	2	7	0	13	1
Unit	**1 :** 1	**Alchl/Drgs:** 0	**Speed:** 45 MPH	**Dir:** S	**Veh Mnvr / Ped Actn:** 4			**Obj Strk:**							
Unit	**2 :** 1	**Alchl/Drgs:** 0	**Speed:** 15 MPH	**Dir:** S	**Veh Mnvr / Ped Actn:** 1			**Obj Strk:**							
10	**105066413**	04/11/2017 12:43	REAR END, SLOW OR STOP	$ 1200	0	0	0	0	1	1	1	7	0	1	1
Unit	**1 :** 2	**Alchl/Drgs:** 0	**Speed:** 5 MPH	**Dir:** W	**Veh Mnvr / Ped Actn:** 4			**Obj Strk:**							
Unit	**2 :** 1	**Alchl/Drgs:** 0	**Speed:** 5 MPH	**Dir:** W	**Veh Mnvr / Ped Actn:** 1			**Obj Strk:**							
11	**105133505**	06/15/2017 16:54	REAR END, SLOW OR STOP	$ 4300	0	0	0	0	1	1	1	3	0	13	1
Unit	**1 :** 1	**Alchl/Drgs:** 0	**Speed:** 25 MPH	**Dir:** S	**Veh Mnvr / Ped Actn:** 4			**Obj Strk:**							
Unit	**2 :** 4	**Alchl/Drgs:** 0	**Speed:** 25 MPH	**Dir:** S	**Veh Mnvr / Ped Actn:** 1			**Obj Strk:**							
12	**105134692**	06/16/2017 09:45	REAR END, SLOW OR STOP	$ 1150	0	0	0	0	1	1	1	3	0	1	1
Unit	**1 :** 1	**Alchl/Drgs:** 0	**Speed:** 10 MPH	**Dir:** W	**Veh Mnvr / Ped Actn:** 4			**Obj Strk:**							
Unit	**2 :** 4	**Alchl/Drgs:** 0	**Speed:** 10 MPH	**Dir:** W	**Veh Mnvr / Ped Actn:** 1			**Obj Strk:**							
13	**105140267**	06/17/2017 23:51	ANIMAL	$ 1500	0	0	0	0	1	5	1	5	0	13	1
Unit	**1 :** 1	**Alchl/Drgs:** 0	**Speed:** 45 MPH	**Dir:** N	**Veh Mnvr / Ped Actn:** 4			**Obj Strk:** 17							
14	**105145723**	06/27/2017 18:13	RIGHT TURN, SAME ROADWAY	$ 1500	0	0	0	0	1	1	1	7	0	13	1
Unit	**1 :** 1	**Alchl/Drgs:** 0	**Speed:** 45 MPH	**Dir:** N	**Veh Mnvr / Ped Actn:** 4			**Obj Strk:**							
Unit	**2 :** 1	**Alchl/Drgs:** 0	**Speed:** 45 MPH	**Dir:** N	**Veh Mnvr / Ped Actn:** 7			**Obj Strk:**							
15	**105201187**	08/24/2017 16:17	OTHER COLLISION WITH VEHICLE	$ 11000	0	0	0	0	1	1	1	1	0	1	1
Unit	**1 :** 1	**Alchl/Drgs:** 0	**Speed:** 45 MPH	**Dir:** N	**Veh Mnvr / Ped Actn:** 4			**Obj Strk:**							
Unit	**2 :** 1	**Alchl/Drgs:** 0	**Speed:** 0 MPH	**Dir:** W	**Veh Mnvr / Ped Actn:** 1			**Obj Strk:**							
16	**105215499**	09/09/2017 12:42	RIGHT TURN, DIFFERENT ROADWAYS	$ 11800	0	0	1	1	1	1	1	7	0	1	1
Unit	**1 :** 3	**Alchl/Drgs:** 0	**Speed:** 0 MPH	**Dir:** NW	**Veh Mnvr / Ped Actn:** 7			**Obj Strk:** 34							
Unit	**2 :** 4	**Alchl/Drgs:** 0	**Speed:** 40 MPH	**Dir:** N	**Veh Mnvr / Ped Actn:** 4			**Obj Strk:**							
17	**105229468**	09/22/2017 06:12	ANGLE	$ 7100	0	0	0	2	1	5	1	5	0	1	1
Unit	**1 :** 1	**Alchl/Drgs:** 0	**Speed:** 40 MPH	**Dir:** W	**Veh Mnvr / Ped Actn:** 4			**Obj Strk:**							
Unit	**2 :** 2	**Alchl/Drgs:** 0	**Speed:** 45 MPH	**Dir:** S	**Veh Mnvr / Ped Actn:** 4			**Obj Strk:**							

DRAFT

All data presented in this report comes explicitly from the Traffic Engineering Accident Analysis System based upon various input criteria provided by the report's creator. The onus is strictly upon the user of this report to exercise due diligence in interpreting and further representing this data.

DocuSign Envelope ID: 5C03745C-4B01-4834-A65D-B77F558A4F46

North Carolina Department of Transportation
Traffic Engineering Accident Analysis System
Intersection Analysis Report

Acc No	Crash ID	Date	Accident Type	Total Damage	Injuries F	A	B	C	Condition R	L	W	Road Ch	Ci	Trfc Ctl Dv	Op
18	**105327982**	12/19/2017 11:51	RIGHT TURN, DIFFERENT ROADWAYS	$ 400	0	0	0	0	1	1	1	7	0	1	1
Unit	**1 : 4**	**Alchl/Drgs:** 0	**Speed:** 0 MPH	**Dir:** NW	**Veh Mnvr / Ped Actn:** 7		**Obj Strk:**								
Unit	**2 : 1**	**Alchl/Drgs:** 0	**Speed:** 30 MPH	**Dir:** N	**Veh Mnvr / Ped Actn:** 11		**Obj Strk:**								
19	**105351576**	01/12/2018 16:22	REAR END, SLOW OR STOP	$ 1300	0	0	0	0	2	1	3	3	0	13	1
Unit	**1 : 4**	**Alchl/Drgs:** 0	**Speed:** 10 MPH	**Dir:** N	**Veh Mnvr / Ped Actn:** 4		**Obj Strk:**								
Unit	**2 : 1**	**Alchl/Drgs:** 0	**Speed:** 5 MPH	**Dir:** N	**Veh Mnvr / Ped Actn:** 1		**Obj Strk:**								
20	**105489216**	05/23/2018 07:32	OTHER COLLISION WITH VEHICLE	$ 1100	0	0	0	0	1	1	1	3	0	1	1
Unit	**1 : 2**	**Alchl/Drgs:** 0	**Speed:** 0 MPH	**Dir:** S	**Veh Mnvr / Ped Actn:** 1		**Obj Strk:**								
Unit	**2 : 5**	**Alchl/Drgs:** 0	**Speed:** 5 MPH	**Dir:** S	**Veh Mnvr / Ped Actn:** 7		**Obj Strk:**								
21	**105503642**	06/07/2018 15:54	REAR END, SLOW OR STOP	$ 800	0	0	0	0	1	1	1	5	0	13	1
Unit	**1 : 1**	**Alchl/Drgs:** 0	**Speed:** 25 MPH	**Dir:** S	**Veh Mnvr / Ped Actn:** 4		**Obj Strk:**								
Unit	**2 : 1**	**Alchl/Drgs:** 0	**Speed:** 20 MPH	**Dir:** S	**Veh Mnvr / Ped Actn:** 11		**Obj Strk:**								
22	**105591865**	09/01/2018 12:52	REAR END, SLOW OR STOP	$ 7500	0	0	0	1	1	1	1	7	0	13	1
Unit	**1 : 4**	**Alchl/Drgs:** 0	**Speed:** 45 MPH	**Dir:** S	**Veh Mnvr / Ped Actn:** 11		**Obj Strk:**								
Unit	**2 : 1**	**Alchl/Drgs:** 0	**Speed:** 45 MPH	**Dir:** S	**Veh Mnvr / Ped Actn:** 1		**Obj Strk:**								
Unit	**3 : 4**	**Alchl/Drgs:** 0	**Speed:** 45 MPH	**Dir:** S	**Veh Mnvr / Ped Actn:** 1		**Obj Strk:**								
23	**105616052**	09/25/2018 18:04	REAR END, SLOW OR STOP	$ 2000	0	0	0	0	1	1	2	5	0	13	1
Unit	**1 : 2**	**Alchl/Drgs:** 0	**Speed:** 45 MPH	**Dir:** S	**Veh Mnvr / Ped Actn:** 4		**Obj Strk:**								
Unit	**2 : 4**	**Alchl/Drgs:** 0	**Speed:** 0 MPH	**Dir:** S	**Veh Mnvr / Ped Actn:** 1		**Obj Strk:**								
24	**105655653**	10/29/2018 16:56	REAR END, SLOW OR STOP	$ 1000	0	0	0	0	1	1	1	1	0	1	1
Unit	**1 : 1**	**Alchl/Drgs:** 0	**Speed:** 10 MPH	**Dir:** W	**Veh Mnvr / Ped Actn:** 4		**Obj Strk:**								
Unit	**2 : 1**	**Alchl/Drgs:** 0	**Speed:** 0 MPH	**Dir:** W	**Veh Mnvr / Ped Actn:** 1		**Obj Strk:**								
25	**105661508**	11/03/2018 14:18	REAR END, SLOW OR STOP	$ 4500	0	0	0	0	1	1	1	1	0	13	1
Unit	**1 : 1**	**Alchl/Drgs:** 0	**Speed:** 20 MPH	**Dir:** W	**Veh Mnvr / Ped Actn:** 4		**Obj Strk:**								
Unit	**2 : 4**	**Alchl/Drgs:** 0	**Speed:** 0 MPH	**Dir:** W	**Veh Mnvr / Ped Actn:** 1		**Obj Strk:**								
26	**105740971**	01/12/2019 20:50	FIXED OBJECT	$ 2150	0	0	0	0	2	5	3	5	0	13	1
Unit	**1 : 5**	**Alchl/Drgs:** 0	**Speed:** 35 MPH	**Dir:** S	**Veh Mnvr / Ped Actn:** 4		**Obj Strk:** 61								

DRAFT

All data presented in this report comes explicitly from the Traffic Engineering Accident Analysis System based upon various input criteria provided by the report's creator. The onus is strictly upon the user of this report to exercise due diligence in interpreting and further representing this data.

DocuSign Envelope ID: 5C03745C-4B01-4834-A65D-B77F558A4F46

North Carolina Department of Transportation
Traffic Engineering Accident Analysis System
Intersection Analysis Report

Acc No	Crash ID	Date	Accident Type	Total Damage	Injuries F	A	B	C	Condition R	L	W	Road Ch	Ci	Trfc Ctl Dv	Op
27	**105776348**	02/16/2019 11:14	FIXED OBJECT	$ 3200	0	0	0	0	1	1	1	3	0	13	1
Unit	**1 : 1**	**Alchl/Drgs:** 0	**Speed:** 45 MPH	**Dir:** E	**Veh Mnvr / Ped Actn:** 8			**Obj Strk:** 33							
28	**105778800**	02/19/2019 07:52	LEFT TURN, DIFFERENT ROADWAYS	$ 16000	0	0	0	3	1	1	1	7	0	1	1
Unit	**1 : 4**	**Alchl/Drgs:** 0	**Speed:** 20 MPH	**Dir:** W	**Veh Mnvr / Ped Actn:** 8			**Obj Strk:**							
Unit	**2 : 4**	**Alchl/Drgs:** 0	**Speed:** 45 MPH	**Dir:** N	**Veh Mnvr / Ped Actn:** 4			**Obj Strk:**							
29	**105781758**	02/22/2019 17:07	REAR END, TURN	$ 1000	0	0	0	0	2	1	3	3	0	1	1
Unit	**1 : 1**	**Alchl/Drgs:** 0	**Speed:** 10 MPH	**Dir:** W	**Veh Mnvr / Ped Actn:** 1			**Obj Strk:**							
Unit	**2 : 1**	**Alchl/Drgs:** 0	**Speed:** 10 MPH	**Dir:** W	**Veh Mnvr / Ped Actn:** 4			**Obj Strk:**							
30	**105838648**	04/18/2019 21:06	FIXED OBJECT	$ 1000	0	0	0	1	1	5	1	5	0	1	1
Unit	**1 : 2**	**Alchl/Drgs:** 0	**Speed:** 45 MPH	**Dir:** W	**Veh Mnvr / Ped Actn:** 4			**Obj Strk:** 59							
31	**105844275**	04/24/2019 15:25	RIGHT TURN, DIFFERENT ROADWAYS	$ 1200	0	0	0	0	1	1	1	5	0	1	1
Unit	**1 : 4**	**Alchl/Drgs:** 0	**Speed:** 45 MPH	**Dir:** N	**Veh Mnvr / Ped Actn:** 7			**Obj Strk:**							
Unit	**2 : 5**	**Alchl/Drgs:** 0	**Speed:** 45 MPH	**Dir:** W	**Veh Mnvr / Ped Actn:** 1			**Obj Strk:**							
32	**105864135**	05/14/2019 16:03	REAR END, SLOW OR STOP	$ 13000	0	0	0	0	1	1	1	7	0	13	1
Unit	**1 : 5**	**Alchl/Drgs:** 0	**Speed:** 45 MPH	**Dir:** S	**Veh Mnvr / Ped Actn:** 4			**Obj Strk:**							
Unit	**2 : 2**	**Alchl/Drgs:** 0	**Speed:** 0 MPH	**Dir:** S	**Veh Mnvr / Ped Actn:** 1			**Obj Strk:**							
33	**105930252**	07/19/2019 12:31	REAR END, SLOW OR STOP	$ 3000	0	0	0	0	1	1	1	3	0	1	1
Unit	**1 : 1**	**Alchl/Drgs:** 0	**Speed:** 5 MPH	**Dir:** W	**Veh Mnvr / Ped Actn:** 4			**Obj Strk:**							
Unit	**2 : 4**	**Alchl/Drgs:** 0	**Speed:** 5 MPH	**Dir:** W	**Veh Mnvr / Ped Actn:** 1			**Obj Strk:**							
34	**105936376**	07/25/2019 14:58	REAR END, SLOW OR STOP	$ 2000	0	0	0	0	1	1	1	3	0	1	1
Unit	**1 : 4**	**Alchl/Drgs:** 0	**Speed:** 5 MPH	**Dir:** W	**Veh Mnvr / Ped Actn:** 4			**Obj Strk:**							
Unit	**2 : 1**	**Alchl/Drgs:** 0	**Speed:** 5 MPH	**Dir:** W	**Veh Mnvr / Ped Actn:** 1			**Obj Strk:**							
35	**105967946**	08/23/2019 07:50	RIGHT TURN, DIFFERENT ROADWAYS	$ 1300	0	0	0	0	2	1	3	1	0	1	1
Unit	**1 : 2**	**Alchl/Drgs:** 0	**Speed:** 5 MPH	**Dir:** E	**Veh Mnvr / Ped Actn:** 7			**Obj Strk:**							
Unit	**2 : 1**	**Alchl/Drgs:** 0	**Speed:** 0 MPH	**Dir:** W	**Veh Mnvr / Ped Actn:** 1			**Obj Strk:**							
36	**106071681**	11/22/2019 17:33	REAR END, SLOW OR STOP	$ 100	0	0	0	0	2	5	3	1	0	13	1
Unit	**1 : 1**	**Alchl/Drgs:** 0	**Speed:** 5 MPH	**Dir:** W	**Veh Mnvr / Ped Actn:** 4			**Obj Strk:**							

DRAFT

DocuSign Envelope ID: 5C03745C-4B01-4834-A65D-B77F558A4F46

North Carolina Department of Transportation
Traffic Engineering Accident Analysis System
Intersection Analysis Report

Acc No	Crash ID	Date	Accident Type	Total Damage	Injuries F	A	B	C	Condition R	L	W	Road Ch	Ci	Trfc Ctl Dv	Op
Unit	**2 :** 1	**Alchl/Drgs:** 0	**Speed:** 0 MPH	**Dir:** W	**Veh Mnvr / Ped Actn:**				1		**Obj Strk:**				
37	**106080274**	11/27/2019 14:00	LEFT TURN, SAME ROADWAY	$ 12000	0	0	1	0	1	1	1	5	0	13	1
Unit	**1 :** 21	**Alchl/Drgs:** 0	**Speed:** 15 MPH	**Dir:** S	**Veh Mnvr / Ped Actn:**				8		**Obj Strk:**				
Unit	**2 :** 4	**Alchl/Drgs:** 0	**Speed:** 35 MPH	**Dir:** N	**Veh Mnvr / Ped Actn:**				4		**Obj Strk:**				
38	**106078050**	11/29/2019 12:41	REAR END, SLOW OR STOP	$ 5000	0	0	0	1	1	1	1	1	0	1	1
Unit	**1 :** 1	**Alchl/Drgs:** 0	**Speed:** 0 MPH	**Dir:** S	**Veh Mnvr / Ped Actn:**				4		**Obj Strk:**				
Unit	**2 :** 4	**Alchl/Drgs:** 0	**Speed:** 0 MPH	**Dir:** S	**Veh Mnvr / Ped Actn:**				1		**Obj Strk:**				
39	**106114921**	01/03/2020 16:00	REAR END, SLOW OR STOP	$ 2000	0	0	0	0	2	1	3	3	0	1	1
Unit	**1 :** 2	**Alchl/Drgs:** 0	**Speed:** 10 MPH	**Dir:** W	**Veh Mnvr / Ped Actn:**				4		**Obj Strk:**				
Unit	**2 :** 5	**Alchl/Drgs:** 0	**Speed:** 0 MPH	**Dir:** W	**Veh Mnvr / Ped Actn:**				1		**Obj Strk:**				
40	**106138991**	01/28/2020 06:59	FIXED OBJECT	$ 1800	0	0	0	0	4	3	1	7	0	13	1
Unit	**1 :** 2	**Alchl/Drgs:** 0	**Speed:** 40 MPH	**Dir:** N	**Veh Mnvr / Ped Actn:**				4		**Obj Strk:**		58		
41	**106217985**	05/03/2020 15:31	REAR END, SLOW OR STOP	$ 1200	0	0	0	0	1	1	1	3	0	1	1
Unit	**1 :** 4	**Alchl/Drgs:** 0	**Speed:** 45 MPH	**Dir:** W	**Veh Mnvr / Ped Actn:**				11		**Obj Strk:**				
Unit	**2 :** 1	**Alchl/Drgs:** 0	**Speed:** 0 MPH	**Dir:** W	**Veh Mnvr / Ped Actn:**				1		**Obj Strk:**				
42	**106249099**	06/11/2020 16:26	REAR END, SLOW OR STOP	$ 2500	0	0	0	0	1	1	1	1	0	13	1
Unit	**1 :** 4	**Alchl/Drgs:** 0	**Speed:** 35 MPH	**Dir:** W	**Veh Mnvr / Ped Actn:**				4		**Obj Strk:**				
Unit	**2 :** 5	**Alchl/Drgs:** 0	**Speed:** 0 MPH	**Dir:** W	**Veh Mnvr / Ped Actn:**				1		**Obj Strk:**				
43	**106316421**	08/24/2020 16:43	LEFT TURN, DIFFERENT ROADWAYS	$ 11000	0	0	0	0	2	1	1	7	0	1	1
Unit	**1 :** 1	**Alchl/Drgs:** 0	**Speed:** 15 MPH	**Dir:** W	**Veh Mnvr / Ped Actn:**				8		**Obj Strk:**		59		
Unit	**2 :** 2	**Alchl/Drgs:** 0	**Speed:** 45 MPH	**Dir:** N	**Veh Mnvr / Ped Actn:**				4		**Obj Strk:**				
44	**106388406**	10/30/2020 16:19	REAR END, SLOW OR STOP	$ 1000	0	0	0	1	1	1	1	5	0	13	1
Unit	**1 :** 4	**Alchl/Drgs:** 0	**Speed:** 25 MPH	**Dir:** N	**Veh Mnvr / Ped Actn:**				4		**Obj Strk:**				
Unit	**2 :** 4	**Alchl/Drgs:** 0	**Speed:** 25 MPH	**Dir:** N	**Veh Mnvr / Ped Actn:**				11		**Obj Strk:**				
45	**106416164**	11/21/2020 13:59	REAR END, SLOW OR STOP	$ 1800	0	0	0	0	1	1	1	1	0	1	1
Unit	**1 :** 4	**Alchl/Drgs:** 7	**Speed:** 25 MPH	**Dir:** W	**Veh Mnvr / Ped Actn:**				4		**Obj Strk:**				
Unit	**2 :** 4	**Alchl/Drgs:** 0	**Speed:** 0 MPH	**Dir:** W	**Veh Mnvr / Ped Actn:**				1		**Obj Strk:**				

DRAFT

All data presented in this report comes explicitly from the Traffic Engineering Accident Analysis System based upon various input criteria provided by the report's creator. The onus is strictly upon the user of this report to exercise due diligence in interpreting and further representing this data.

DocuSign Envelope ID: 5C03745C-4B01-4834-A65D-B77F558A4F46

North Carolina Department of Transportation
Traffic Engineering Accident Analysis System
Intersection Analysis Report

Acc No	Crash ID	Date	Accident Type	Total Damage	Injuries F	A	B	C	Condition R	L	W	Road Ch	Ci	Trfc Ctl Dv	Op
46	**106416731**	11/21/2020 20:07	FIXED OBJECT	$ 6000	0	0	0	0	1	5	1	1	0	13	1
Unit	**1 :** 1	**Alchl/Drgs:** 0	**Speed:** 50 MPH	**Dir:** E	**Veh Mnvr / Ped Actn:** 8			**Obj Strk:** 33							
47	**106425671**	12/02/2020 13:19	REAR END, SLOW OR STOP	$ 10000	0	0	0	0	1	1	1	5	0	13	1
Unit	**1 :** 4	**Alchl/Drgs:** 0	**Speed:** 40 MPH	**Dir:** S	**Veh Mnvr / Ped Actn:** 4			**Obj Strk:**							
Unit	**2 :** 1	**Alchl/Drgs:** 0	**Speed:** 40 MPH	**Dir:** S	**Veh Mnvr / Ped Actn:** 11			**Obj Strk:**							
48	**106469908**	01/20/2021 15:18	REAR END, SLOW OR STOP	$ 5000	0	0	0	0	1	1	1	1	0	13	1
Unit	**1 :** 4	**Alchl/Drgs:** 0	**Speed:** 45 MPH	**Dir:** N	**Veh Mnvr / Ped Actn:** 4			**Obj Strk:**							
Unit	**2 :** 1	**Alchl/Drgs:** 0	**Speed:** 45 MPH	**Dir:** N	**Veh Mnvr / Ped Actn:** 1			**Obj Strk:**							
49	**106480793**	02/03/2021 19:17	FIXED OBJECT	$ 1500	0	0	0	0	1	5	1	1	0	1	1
Unit	**1 :** 2	**Alchl/Drgs:** 0	**Speed:** 40 MPH	**Dir:** W	**Veh Mnvr / Ped Actn:** 7			**Obj Strk:** 59							
50	**106519224**	03/17/2021 19:15	REAR END, SLOW OR STOP	$ 3600	0	0	0	0	1	1	2	1	0	13	1
Unit	**1 :** 2	**Alchl/Drgs:** 0	**Speed:** 45 MPH	**Dir:** S	**Veh Mnvr / Ped Actn:** 4			**Obj Strk:**							
Unit	**2 :** 1	**Alchl/Drgs:** 0	**Speed:** 0 MPH	**Dir:** S	**Veh Mnvr / Ped Actn:** 1			**Obj Strk:**							

Legend for Report Details:

Acc No - Accident Number
Injuries: F - Fatal, A - Class A, B - Class B, C - Class C
Condition: R - Road Surface, L - Ambient Light, W - Weather
Rd Ch - Road Character
Rd Ci - Roadway Contributing Circumstances
Trfc Ctl - Traffic Control: Dv - Device, Op - Operating
Alchl/Drgs - Alcohol Drugs Suspected
Veh Mnvr/Ped Actn - Vehicle Maneuver/Pedestrian Action
Obj Strk - Object Struck

DRAFT

All data presented in this report comes explicitly from the Traffic Engineering Accident Analysis System based upon various input criteria provided by the report's creator. The onus is strictly upon the user of this report to exercise due diligence in interpreting and further representing this data.

DocuSign Envelope ID: 5C03745C-4B01-4834-A65D-B77F558A4F46

Summary Statistics

High Level Crash Summary

Crash Type	Number of Crashes	Percent of Total
Total Crashes	50	100.00
Fatal Crashes	0	0.00
Non-Fatal Injury Crashes	9	18.00
Total Injury Crashes	9	18.00
Property Damage Only Crashes	41	82.00
Night Crashes	7	14.00
Wet Crashes	8	16.00
Alcohol/Drugs Involvement Crashes	1	2.00

Crash Severity Summary

Crash Type	Number of Crashes	Percent of Total
Total Crashes	50	100.00
Fatal Crashes	0	0.00
Class A Crashes	0	0.00
Class B Crashes	2	4.00
Class C Crashes	7	14.00
Property Damage Only Crashes	41	82.00

Vehicle Exposure Statistics

Annual ADT = 17400

Total Vehicle Exposure = 31.77 (MEV)

Crash Rate	Crashes Per 100 Million Vehicles Entered
Total Crash Rate	157.37
Fatal Crash Rate	0.00
Non Fatal Crash Rate	28.33
Night Crash Rate	22.03
Wet Crash Rate	25.18
EPDO Rate	366.99

DRAFT

All data presented in this report comes explicitly from the Traffic Engineering Accident Analysis System based upon various input criteria provided by the report's creator. The onus is strictly upon the user of this report to exercise due diligence in interpreting and further representing this data.

DocuSign Envelope ID: 5C03745C-4B01-4834-A65D-B77F558A4F46

Miscellaneous Statistics

Severity Index =	2.33
EPDO Crash Index =	116.60
Estimated Property Damage Total = $	187725.00

Accident Type Summary

Accident Type	Number of Crashes	Percent of Total
ANGLE	1	2.00
ANIMAL	1	2.00
FIXED OBJECT	6	12.00
LEFT TURN, DIFFERENT ROADWAYS	3	6.00
LEFT TURN, SAME ROADWAY	1	2.00
OTHER COLLISION WITH VEHICLE	2	4.00
REAR END, SLOW OR STOP	29	58.00
REAR END, TURN	1	2.00
RIGHT TURN, DIFFERENT ROADWAYS	5	10.00
RIGHT TURN, SAME ROADWAY	1	2.00

Injury Summary

Injury Type	Number of Injuries	Percent of Total
Fatal Injuries	0	0.00
Class A Injuries	0	0.00
Class B Injuries	2	14.29
Class C Injuries	12	85.71
Total Non-Fatal Injuries	14	100.00
Total Injuries	14	100.00

DRAFT

All data presented in this report comes explicitly from the Traffic Engineering Accident Analysis System based upon various input criteria provided by the report's creator. The onus is strictly upon the user of this report to exercise due diligence in interpreting and further representing this data.

DocuSign Envelope ID: 5C03745C-4B01-4834-A65D-B77F558A4F46

Monthly Summary

Month	Number of Crashes	Percent of Total
Jan	5	10.00
Feb	6	12.00
Mar	1	2.00
Apr	4	8.00
May	3	6.00
Jun	7	14.00
Jul	3	6.00
Aug	4	8.00
Sep	4	8.00
Oct	2	4.00
Nov	9	18.00
Dec	2	4.00

Daily Summary

Day	Number of Crashes	Percent of Total
Mon	2	4.00
Tue	8	16.00
Wed	9	18.00
Thu	9	18.00
Fri	13	26.00
Sat	8	16.00
Sun	1	2.00

DRAFT

All data presented in this report comes explicitly from the Traffic Engineering Accident Analysis System based upon various input criteria provided by the report's creator. The onus is strictly upon the user of this report to exercise due diligence in interpreting and further representing this data.

DocuSign Envelope ID: 5C03745C-4B01-4834-A65D-B77F558A4F46

Hourly Summary

Hour	Number of Crashes	Percent of Total
0000-0059	0	0.00
0100-0159	0	0.00
0200-0259	0	0.00
0300-0359	0	0.00
0400-0459	0	0.00
0500-0559	0	0.00
0600-0659	2	4.00
0700-0759	4	8.00
0800-0859	1	2.00
0900-0959	1	2.00
1000-1059	0	0.00
1100-1159	2	4.00
1200-1259	7	14.00
1300-1359	3	6.00
1400-1459	4	8.00
1500-1559	5	10.00
1600-1659	11	22.00
1700-1759	2	4.00
1800-1859	2	4.00
1900-1959	2	4.00
2000-2059	2	4.00
2100-2159	1	2.00
2200-2259	0	0.00
2300-2359	1	2.00

DRAFT

All data presented in this report comes explicitly from the Traffic Engineering Accident Analysis System based upon various input criteria provided by the report's creator. The onus is strictly upon the user of this report to exercise due diligence in interpreting and further representing this data.

DocuSign Envelope ID: 5C03745C-4B01-4834-A65D-B77F558A4F46

Light and Road Conditions Summary

Condition	Dry	Wet	Other	Total
Day	36	6	0	42
Dark	5	2	0	7
Other	0	0	1	1
Total	41	8	1	50

Object Struck Summary

Object Type	Times Struck	Percent of Total
ANIMAL	1	11.11
DITCH	1	11.11
EMBANKMENT	3	33.33
FENCE OR FENCE POST	1	11.11
TREE	2	22.22
UTILITY POLE	1	11.11

Vehicle Type Summary

Vehicle Type	Number Involved	Percent of Total
LIGHT TRUCK (MINI-VAN, PANEL)	1	1.06
MOPED	1	1.06
PASSENGER CAR	42	44.68
PICKUP	16	17.02
SINGLE UNIT TRUCK (3 OR MORE AXLES)	1	1.06
SPORT UTILITY	27	28.72
VAN	6	6.38

DRAFT

All data presented in this report comes explicitly from the Traffic Engineering Accident Analysis System based upon various input criteria provided by the report's creator. The onus is strictly upon the user of this report to exercise due diligence in interpreting and further representing this data.

DocuSign Envelope ID: 5C03745C-4B01-4834-A65D-B77F558A4F46

Yearly Totals Summary

Accident Totals

Year	Total Accidents	Fatal Accidents	Injury Accidents	Property Damage Only Accidents
2016	7	0	1	6
2017	11	0	2	9
2018	7	0	1	6
2019	13	0	4	9
2020	9	0	1	8
2021	3	0	0	3
Total	50	0	9	41

Injury Totals

Year	Fatal Injuries	Class A, B, or C Injuries
2016	0	2
2017	0	4
2018	0	1
2019	0	6
2020	0	1
2021	0	0
Total	0	14

Miscellaneous Totals

Year	Property Damage	EPDO Index
2016	$ 11825	14.40
2017	$ 49350	25.80
2018	$ 18200	14.40
2019	$ 60950	42.60
2020	$ 37300	16.40
2021	$ 10100	3.00
Total	$ 187725	116.60

Type of Accident Totals

Year	Left Turn	Right Turn	Rear End	Run Off Road & Fixed Object	Angle	Side Swipe	Other
2016	1	1	5	0	0	0	0
2017	0	3	5	0	1	0	2

DRAFT

All data presented in this report comes explicitly from the Traffic Engineering Accident Analysis System based upon various input criteria provided by the report's creator. The onus is strictly upon the user of this report to exercise due diligence in interpreting and further representing this data.

DocuSign Envelope ID: 5C03745C-4B01-4834-A65D-B77F558A4F46

North Carolina Department of Transportation
Traffic Engineering Accident Analysis System
Intersection Analysis Report

Year	Left Turn	Right Turn	Rear End	Run Off Road & Fixed Object	Angle	Side Swipe	Other
2018	0	0	6	0	0	0	1
2019	2	2	6	3	0	0	0
2020	1	0	6	2	0	0	0
2021	0	0	2	1	0	0	0
Total	4	6	30	6	1	0	3

DRAFT

All data presented in this report comes explicitly from the Traffic Engineering Accident Analysis System based upon various input criteria provided by the report's creator. The onus is strictly upon the user of this report to exercise due diligence in interpreting and further representing this data.

DocuSign Envelope ID: 5C03745C-4B01-4834-A65D-B77F558A4F46

Appendix I – FREEVAL Issue

Three Oaks staff noted a discrepancy in the Density Based level of service (LOS) reported by FREEVAL and the Total Density in passenger cars per mile per lane (pc/mi/ln) for individual freeway segments. According to the Highway Capacity Manual (6th Edition), level of service analysis is performed for both the overall freeway facility and freeway components of all segments in the defined facility. While the overall freeway level of service is based on the weighted average density for the facility, for segment components, LOS E is defined as having a density (pc/mi/ln) greater than 35 but not greater than 45. However, the Total Density reported by FREEVAL in the 2045 Build (4:30 – 4:45 PM interval) for segments 4-6, 8-10, and 12-13 is above 35 yet only segments 5, 9, and 13 are reported as LOS E.

The issue was discussed with Thomas Chase at the Institute of Transportation Research and Education (ITRE), as ITRE maintains and provides support for FREEVAL. Thomas offered two potential explanations. One, that since the calculation of LOS for ramp merges and diverges is based on the 2 lanes closest to the ramp, and I-26 has 4 lanes per direction, there may be an interim step not being displayed correctly, and the density reported is an average across all 4 lanes. This explanation seemed logical, since the LOS reported for the basic segments matches the reported density while the inconsistency occurs on ramp merges, and diverges. If this were the case, then the LOS reported would be correct.

The second possibility is that there is an error in the calculations and the correct LOS is not being shown. If this is the case, there are 8 segments experiencing LOS E conditions in the 2045 Build (4:30 - 4:45 PM interval) rather than 2 with all other time periods operating at LOS D or better.

ITRE is currently researching the issue to see if a FREEVAL update needs to be circulated. However, the resolution to this issue will likely not be available before the submittal of this IAR.

Since the I-4400/I-4700 project was designed for the year 2040 and was to operate at LOS D or better, this analysis was reproduced for 2040 volumes. A straight-line interpolation was performed on the 2021 and 2045 volumes to obtain a 2040 volume. The segment was reanalyzed for 2040 to compare to the results from the I-4400/I-4700 IAR (the Design Year of that study was 2040). In 2040, all segments have a density of less than 35 pc/mi/ln. So, no matter what the resolution is to the FREEVAL reporting issue, all Build segments in this IAR are expected to operate at LOS D or better in the year 2040.

DocuSign Envelope ID: 5C03745C-4B01-4834-A65D-B77F558A4F46

2045 Build Eastbound PM Analysis (Total Density in pc/mi/ln)

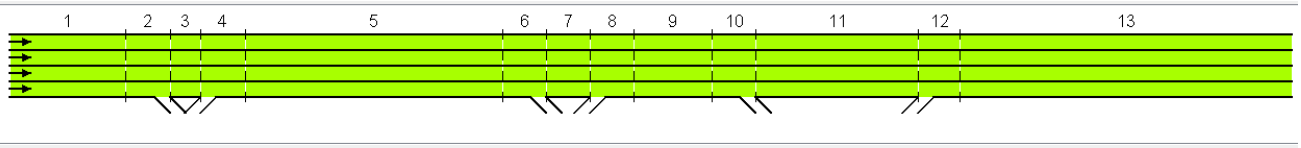

Analysis Period	Seg. 1	Seg. 2	Seg. 3	Seg. 4	Seg. 5	Seg. 6	Seg. 7	Seg. 8	Seg. 9	Seg. 10	Seg. 11	Seg. 12	Seg. 13
#1 15:30 - 15:45	21.6	22.1	20.3	23.6	21.7	22.2	20.6	23.4	21.6	22.0	18.9	22.6	20.8
#2 15:45 - 16:00	19.8	20.3	18.5	22.0	20.3	20.8	18.9	21.7	20.0	20.6	15.7	19.0	17.6
#3 16:00 - 16:15	19.3	19.7	18.2	22.5	20.6	21.1	19.6	22.8	21.0	21.5	18.0	21.6	19.9
#4 16:15 - 16:30	26.9	26.9	25.5	30.1	28.7	28.7	26.8	30.3	29.0	29.0	28.2	33.1	32.8
#5 16:30 - 16:45	33.9	33.9	31.2	36.3	36.3	36.3	33.0	37.3	37.3	37.3	27.6	35.2	35.2
#6 16:45 - 17:00	32.9	32.9	29.7	34.8	34.8	34.8	31.2	34.9	34.9	34.9	24.8	31.5	30.5
#7 17:00 - 17:15	25.2	25.4	23.3	28.6	26.9	26.9	24.9	29.0	27.4	27.4	21.8	27.5	25.7
#8 17:15 - 17:30	25.9	26.0	23.5	27.9	26.1	26.1	24.1	27.9	26.1	26.2	21.7	27.7	25.8
#9 17:30 - 17:45	24.9	25.1	23.1	27.3	25.5	25.6	23.8	27.6	25.8	26.0	21.4	27.6	25.8
#10 17:45 - 18:00	25.6	25.7	23.7	28.6	26.9	26.9	25.0	29.0	27.4	27.4	22.3	28.5	26.8
#11 18:00 - 18:15	21.4	21.9	20.2	23.7	21.8	22.3	20.7	24.1	22.2	22.6	19.6	25.2	23.3
#12 18:15 - 18:30	21.2	21.7	19.6	23.6	21.7	22.2	20.4	23.9	22.0	22.5	19.1	24.6	22.6

2045 Build Eastbound PM Analysis (Level of Service)

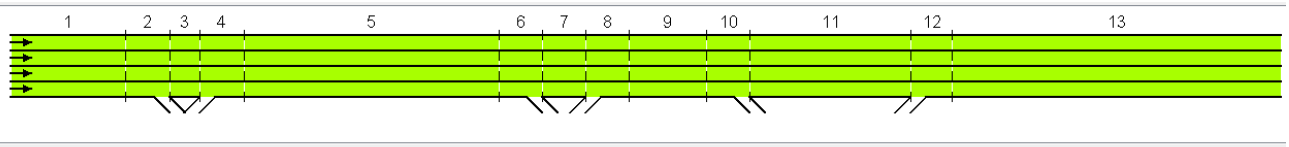

Analysis Period	Seg. 1	Seg. 2	Seg. 3	Seg. 4	Seg. 5	Seg. 6	Seg. 7	Seg. 8	Seg. 9	Seg. 10	Seg. 11	Seg. 12	Seg. 13
#1 15:30 - 15:45	C	C	C	C	C	C	C	C	C	C	C	C	C
#2 15:45 - 16:00	C	C	C	C	C	C	C	B	C	C	B	B	B
#3 16:00 - 16:15	C	B	C	C	C	C	C	C	C	C	B	C	C
#4 16:15 - 16:30	D	C	C	C	D	C	D	C	D	C	D	D	D
#5 16:30 - 16:45	D	D	D	D	E	D	D	D	E	D	D	D	E
#6 16:45 - 17:00	D	D	D	D	D	D	D	D	D	D	C	D	D
#7 17:00 - 17:15	C	C	C	C	D	C	C	C	D	C	C	C	C
#8 17:15 - 17:30	C	C	C	C	D	C	C	C	D	C	C	C	C
#9 17:30 - 17:45	C	C	C	C	C	C	C	C	C	C	C	C	C
#10 17:45 - 18:00	C	C	C	C	D	C	C	C	D	C	C	C	D
#11 18:00 - 18:15	C	C	C	C	C	C	C	C	C	C	C	C	C
#12 18:15 - 18:30	C	C	C	C	C	C	C	C	C	C	C	C	C

2040 Build Eastbound PM Analysis (Total Density in pc/mi/ln)

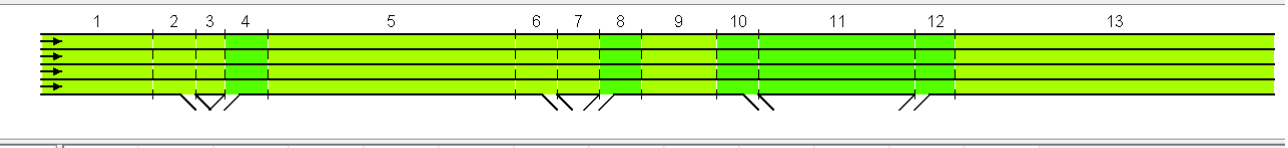

Analysis Period	Seg. 1	Seg. 2	Seg. 3	Seg. 4	Seg. 5	Seg. 6	Seg. 7	Seg. 8	Seg. 9	Seg. 10	Seg. 11	Seg. 12	Seg. 13
#1 15:30 - 15:45	20.1	20.6	18.9	21.8	20.1	20.5	19.1	21.7	20.0	20.4	17.6	21.0	19.4
#2 15:45 - 16:00	18.5	18.9	17.2	20.4	18.8	19.2	17.6	20.1	18.6	19.1	14.6	17.6	16.4
#3 16:00 - 16:15	18.0	18.4	16.9	20.8	19.1	19.6	18.2	21.1	19.4	19.9	16.7	20.1	18.6
#4 16:15 - 16:30	24.6	24.7	23.4	27.7	26.0	26.0	24.4	28.0	26.2	26.4	20.6	25.5	23.6
#5 16:30 - 16:45	30.2	30.2	28.0	32.5	31.9	31.9	29.5	33.0	32.7	32.7	25.1	32.2	31.3
#6 16:45 - 17:00	29.4	29.4	26.8	31.6	30.8	30.8	28.0	31.7	30.8	30.8	22.8	29.2	27.5
#7 17:00 - 17:15	23.2	23.6	21.4	26.4	24.5	24.7	22.8	26.7	24.8	25.2	20.1	25.5	23.5
#8 17:15 - 17:30	23.8	24.2	21.6	25.7	23.8	24.2	22.1	25.7	23.8	24.2	20.1	25.6	23.7
#9 17:30 - 17:45	22.9	23.3	21.3	25.2	23.3	23.7	21.9	25.5	23.6	24.0	19.8	25.6	23.6
#10 17:45 - 18:00	23.5	23.9	21.8	26.4	24.5	24.7	22.9	26.8	24.9	25.2	20.6	26.4	24.4
#11 18:00 - 18:15	19.9	20.4	18.8	21.9	20.2	20.6	19.3	22.3	20.5	20.9	18.2	23.4	21.5
#12 18:15 - 18:30	19.7	20.2	18.2	21.8	20.0	20.5	18.9	22.1	20.3	20.8	17.8	22.8	20.9

DocuSign Envelope ID: 5C03745C-4B01-4834-A65D-B77F558A4F46

2040 Build Eastbound PM Analysis (Level of Service)

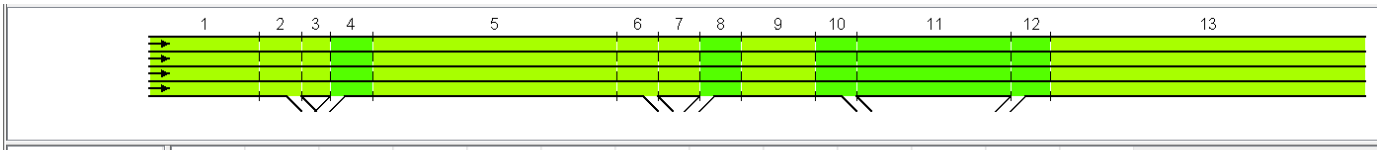

Analysis Period	Seg. 1	Seg. 2	Seg. 3	Seg. 4	Seg. 5	Seg. 6	Seg. 7	Seg. 8	Seg. 9	Seg. 10	Seg. 11	Seg. 12	Seg. 13
#1 15:30 - 15:45	C	C	C	B	C	C	C	B	C	B	B	B	C
#2 15:45 - 16:00	C	B	B	B	C	B	B	B	C	B	B	B	B
#3 16:00 - 16:15	C	B	B	C	C	B	C	B	C	B	B	B	C
#4 16:15 - 16:30	C	C	C	C	C	C	C	C	D	C	C	C	C
#5 16:30 - 16:45	D	D	D	D	D	D	D	D	D	C	C	D	D
#6 16:45 - 17:00	D	D	D	C	D	D	D	C	D	C	C	C	D
#7 17:00 - 17:15	C	C	C	C	C	C	C	C	C	C	C	C	C
#8 17:15 - 17:30	C	C	C	C	C	C	C	C	C	C	C	C	C
#9 17:30 - 17:45	C	C	C	C	C	C	C	C	C	C	C	C	C
#10 17:45 - 18:00	C	C	C	C	C	C	C	C	C	C	C	C	C
#11 18:00 - 18:15	C	C	C	C	C	C	C	C	C	B	C	C	C
#12 18:15 - 18:30	C	C	C	C	C	C	C	C	C	B	B	C	C

DocuSign Envelope ID: 5C03745C-4B01-4834-A65D-B77F558A4F46

Appendix J – FREEVAL-Result Contours

DocuSign Envelope ID: 5C03745C-4B01-4834-A65D-B77F558A4F46

2021 No-Build

2021 No-Build AM Peak Density and Level of Service - Eastbound

Density (pc/mi/ln)

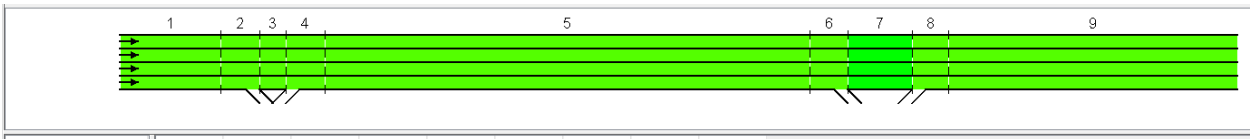

Analysis Period	Seg. 1	Seg. 2	Seg. 3	Seg. 4	Seg. 5	Seg. 6	Seg. 7	Seg. 8	Seg. 9
#1 6:30 - 6:45	12.9	13.2	11.5	12.9	12.2	12.2	10.3	12.0	11.3
#2 6:45 - 7:00	11.9	12.1	10.4	12.0	11.3	11.6	8.2	9.7	9.2
#3 7:00 - 7:15	11.6	11.8	10.3	12.3	11.6	11.6	9.4	11.1	10.5
#4 7:15 - 7:30	15.4	15.7	14.3	16.6	15.5	15.8	11.8	14.1	13.2
#5 7:30 - 7:45	17.9	18.4	16.3	19.1	17.7	18.1	13.8	17.3	16.1
#6 7:45 - 8:00	17.6	18.1	15.6	18.4	17.1	17.6	12.5	15.6	14.6
#7 8:00 - 8:15	14.7	15.1	12.9	15.4	14.4	14.6	11.2	13.7	12.9
#8 8:15 - 8:30	15.0	15.4	12.8	14.9	13.9	14.0	11.3	14.0	13.1
#9 8:30 - 8:45	14.5	14.9	12.9	14.9	13.9	14.0	11.3	14.1	13.2
#10 8:45 - 9:00	14.9	15.2	13.2	15.5	14.5	14.6	11.6	14.3	13.4
#11 9:00 - 9:15	12.8	13.0	11.5	13.0	12.3	12.3	10.4	13.0	12.2
#12 9:15 - 9:30	12.6	13.0	11.0	12.7	12.0	12.0	10.0	12.5	11.7

LOS

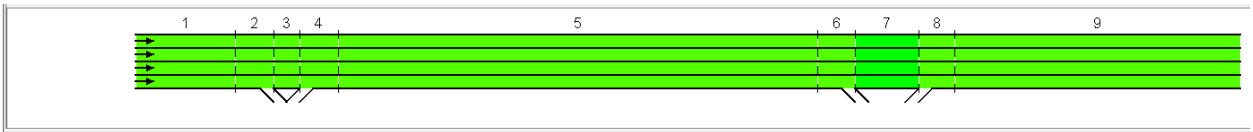

Analysis Period	Seg. 1	Seg. 2	Seg. 3	Seg. 4	Seg. 5	Seg. 6	Seg. 7	Seg. 8	Seg. 9
#1 6:30 - 6:45	B	B	B	B	B	B	A	B	B
#2 6:45 - 7:00	B	B	A	B	B	B	A	B	A
#3 7:00 - 7:15	B	B	A	B	B	B	A	B	A
#4 7:15 - 7:30	B	B	B	B	B	B	B	B	B
#5 7:30 - 7:45	B	B	B	B	B	B	B	B	B
#6 7:45 - 8:00	B	B	B	B	B	B	B	B	B
#7 8:00 - 8:15	B	B	B	B	B	B	B	B	B
#8 8:15 - 8:30	B	B	B	B	B	B	B	B	B
#9 8:30 - 8:45	B	B	B	B	B	B	B	B	B
#10 8:45 - 9:00	B	B	B	B	B	B	B	B	B
#11 9:00 - 9:15	B	B	B	B	B	B	A	B	B
#12 9:15 - 9:30	B	B	A	B	B	B	A	B	B

2021 No-Build AM Peak Density and Level of Service - Westbound

Density (pc/mi/ln)

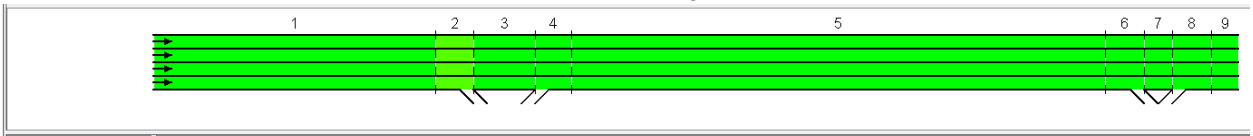

Analysis Period	Seg. 1	Seg. 2	Seg. 3	Seg. 4	Seg. 5	Seg. 6	Seg. 7	Seg. 8	Seg. 9
#1 6:30 - 6:45	9.3	9.6	7.4	8.9	8.4	8.6	7.4	8.3	7.9
#2 6:45 - 7:00	11.0	11.4	8.7	10.5	9.9	10.1	8.6	10.0	9.4
#3 7:00 - 7:15	11.2	11.7	8.5	11.4	10.7	10.9	9.5	11.1	10.5
#4 7:15 - 7:30	14.5	15.1	11.6	15.2	14.2	14.5	12.7	14.9	13.9
#5 7:30 - 7:45	16.1	16.8	12.6	16.3	15.2	15.6	13.5	16.1	15.0
#6 7:45 - 8:00	17.5	18.4	13.5	17.1	15.9	16.3	14.0	16.7	15.6
#7 8:00 - 8:15	15.1	15.9	11.5	14.7	13.8	14.0	12.3	14.6	13.7
#8 8:15 - 8:30	13.9	14.5	11.2	14.3	13.4	13.6	12.2	14.4	13.5
#9 8:30 - 8:45	13.7	14.2	10.9	13.7	12.9	13.1	11.7	14.0	13.1
#10 8:45 - 9:00	12.5	13.0	9.8	12.3	11.6	11.8	10.6	13.0	12.2
#11 9:00 - 9:15	11.9	12.3	9.7	11.9	11.2	11.4	10.3	12.1	11.4
#12 9:15 - 9:30	11.6	12.0	9.6	11.8	11.1	11.3	10.2	12.2	11.5

DocuSign Envelope ID: 5C03745C-4B01-4834-A65D-B77F558A4F46

LOS

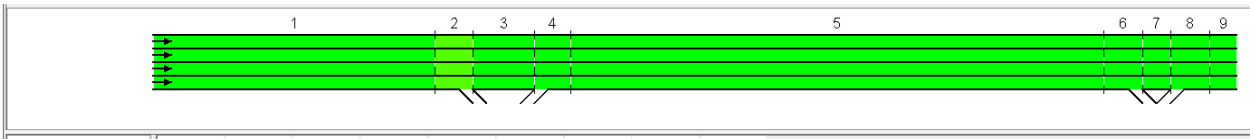

Analysis Period	Seg. 1	Seg. 2	Seg. 3	Seg. 4	Seg. 5	Seg. 6	Seg. 7	Seg. 8	Seg. 9
#1 6:30 - 6:45	A	B	A	A	A	A	A	A	A
#2 6:45 - 7:00	B	B	A	B	A	B	A	B	A
#3 7:00 - 7:15	B	B	A	B	A	B	A	B	A
#4 7:15 - 7:30	B	B	B	B	B	B	B	B	B
#5 7:30 - 7:45	B	C	B	B	B	B	B	B	B
#6 7:45 - 8:00	B	C	B	B	B	B	B	B	B
#7 8:00 - 8:15	B	C	B	B	B	B	B	B	B
#8 8:15 - 8:30	B	B	B	B	B	B	B	B	B
#9 8:30 - 8:45	B	B	A	B	B	B	B	B	B
#10 8:45 - 9:00	B	B	A	B	B	B	A	B	B
#11 9:00 - 9:15	B	B	A	B	B	B	A	B	B
#12 9:15 - 9:30	B	B	A	B	B	B	A	B	B

2021 No-Build PM Peak Density and Level of Service - Eastbound

Density (pc/mi/ln)

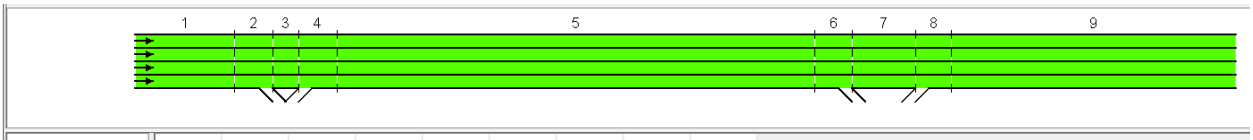

Analysis Period	Seg. 1	Seg. 2	Seg. 3	Seg. 4	Seg. 5	Seg. 6	Seg. 7	Seg. 8	Seg. 9
#1 15:30 - 15:45	15.3	15.7	13.8	17.0	15.8	16.0	13.1	17.0	15.8
#2 15:45 - 16:00	18.6	19.1	16.5	19.7	18.2	18.6	14.7	19.1	17.6
#3 16:00 - 16:15	17.7	18.3	15.6	18.8	17.5	17.8	14.5	18.5	17.2
#4 16:15 - 16:30	18.4	19.0	16.3	19.0	17.6	18.0	13.8	18.0	16.7
#5 16:30 - 16:45	17.1	17.5	15.2	18.1	16.8	17.2	13.2	16.7	15.5
#6 16:45 - 17:00	17.1	17.5	15.3	18.3	17.0	17.3	14.0	18.7	17.3
#7 17:00 - 17:15	18.1	18.7	16.0	19.5	18.1	18.4	15.3	19.9	18.4
#8 17:15 - 17:30	20.0	20.5	18.2	21.9	20.2	20.7	16.7	21.8	20.0
#9 17:30 - 17:45	17.4	17.9	15.7	18.8	17.4	17.8	14.4	18.6	17.2
#10 17:45 - 18:00	16.7	17.1	14.6	16.9	15.8	16.0	12.5	16.2	15.1
#11 18:00 - 18:15	13.8	14.1	12.3	14.4	13.5	13.6	11.4	14.7	13.7
#12 18:15 - 18:30	14.1	14.4	12.5	14.4	13.5	13.6	11.0	14.1	13.2

LOS

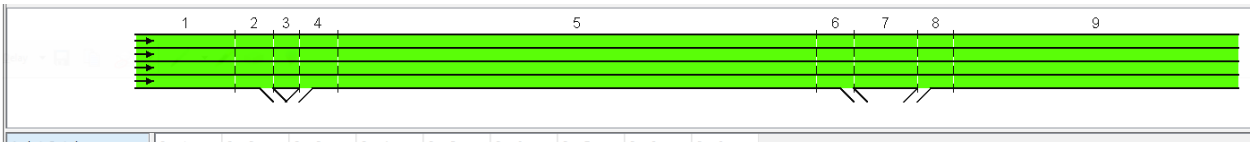

Analysis Period	Seg. 1	Seg. 2	Seg. 3	Seg. 4	Seg. 5	Seg. 6	Seg. 7	Seg. 8	Seg. 9
#1 15:30 - 15:45	B	B	B	B	B	B	B	B	B
#2 15:45 - 16:00	C	C	B	B	C	B	B	B	B
#3 16:00 - 16:15	B	B	B	B	B	B	B	B	B
#4 16:15 - 16:30	C	C	B	B	B	B	B	B	B
#5 16:30 - 16:45	B	B	B	B	B	B	B	B	B
#6 16:45 - 17:00	B	B	B	B	B	B	B	B	B
#7 17:00 - 17:15	C	B	B	B	C	B	B	C	C
#8 17:15 - 17:30	C	C	C	C	C	B	B	C	C
#9 17:30 - 17:45	B	B	B	B	B	B	B	B	B
#10 17:45 - 18:00	B	B	B	B	B	B	B	B	B
#11 18:00 - 18:15	B	B	B	B	B	B	B	B	B
#12 18:15 - 18:30	B	B	B	B	B	B	B	B	B

DocuSign Envelope ID: 5C03745C-4B01-4834-A65D-B77F558A4F46

2021 No-Build PM Peak Density and Level of Service - Westbound

Density (pc/mi/ln)

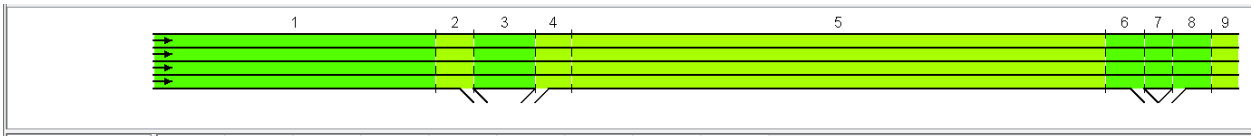

Analysis Period	Seg. 1	Seg. 2	Seg. 3	Seg. 4	Seg. 5	Seg. 6	Seg. 7	Seg. 8	Seg. 9
#1 15:30 - 15:45	16.9	17.5	14.5	19.5	18.0	18.5	16.5	20.1	18.5
#2 15:45 - 16:00	17.4	18.0	14.8	19.2	17.8	18.3	16.2	19.5	18.0
#3 16:00 - 16:15	16.1	16.7	13.7	18.3	17.0	17.4	15.7	19.2	17.8
#4 16:15 - 16:30	17.2	17.9	14.2	17.9	16.7	17.0	15.3	19.0	17.6
#5 16:30 - 16:45	15.1	15.6	12.7	17.2	15.9	16.2	14.7	17.4	16.2
#6 16:45 - 17:00	15.8	16.3	13.6	17.0	15.8	16.2	14.2	17.2	16.0
#7 17:00 - 17:15	16.1	16.6	13.5	18.6	17.2	17.6	15.3	18.7	17.4
#8 17:15 - 17:30	16.0	16.6	13.2	18.1	16.8	17.2	15.0	18.5	17.2
#9 17:30 - 17:45	15.0	15.5	12.6	16.6	15.5	15.8	14.1	17.4	16.2
#10 17:45 - 18:00	14.6	15.0	12.3	16.8	15.6	15.9	14.6	17.5	16.3
#11 18:00 - 18:15	13.6	14.1	11.1	15.1	14.1	14.3	13.0	15.8	14.7
#12 18:15 - 18:30	13.5	13.8	11.7	14.3	13.4	13.6	12.4	14.7	13.8

LOS

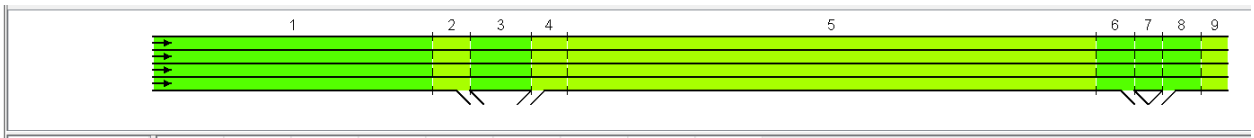

Analysis Period	Seg. 1	Seg. 2	Seg. 3	Seg. 4	Seg. 5	Seg. 6	Seg. 7	Seg. 8	Seg. 9
#1 15:30 - 15:45	B	C	B	C	C	B	B	B	C
#2 15:45 - 16:00	B	C	B	B	B	B	B	B	C
#3 16:00 - 16:15	B	C	B	B	B	B	B	B	B
#4 16:15 - 16:30	B	C	B	B	B	B	B	B	B
#5 16:30 - 16:45	B	B	B	B	B	B	B	B	B
#6 16:45 - 17:00	B	C	B	B	B	B	B	B	B
#7 17:00 - 17:15	B	C	B	B	B	B	B	B	B
#8 17:15 - 17:30	B	C	B	B	B	B	B	B	B
#9 17:30 - 17:45	B	B	B	B	B	B	B	B	B
#10 17:45 - 18:00	B	B	B	B	B	B	B	B	B
#11 18:00 - 18:15	B	B	B	B	B	B	B	B	B
#12 18:15 - 18:30	B	B	B	B	B	B	B	B	B

DocuSign Envelope ID: 5C03745C-4B01-4834-A65D-B77F558A4F46

2021 Build

2021 Build AM Peak Density and Level of Service - Eastbound

Density (pc/mi/ln)

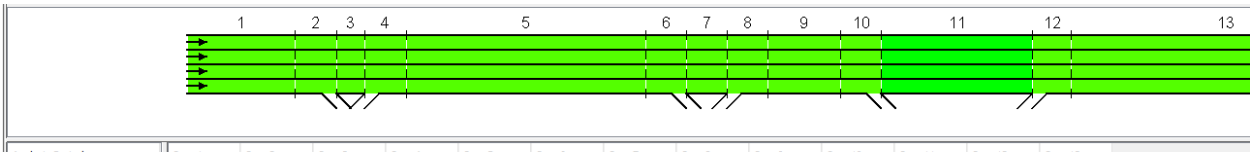

Analysis Period	Seg. 1	Seg. 2	Seg. 3	Seg. 4	Seg. 5	Seg. 6	Seg. 7	Seg. 8	Seg. 9	Seg. 10	Seg. 11	Seg. 12	Seg. 13
#1 6:30 - 6:45	13.1	13.3	11.9	13.3	12.5	12.6	11.8	12.9	12.1	12.2	10.2	11.8	11.1
#2 6:45 - 7:00	12.0	12.3	10.9	12.3	11.6	16.4	14.4	16.1	14.8	11.4	7.8	9.3	8.8
#3 7:00 - 7:15	11.7	11.9	10.7	12.5	11.8	16.6	14.8	16.7	15.4	11.6	9.3	10.9	10.3
#4 7:15 - 7:30	15.6	15.9	14.7	16.8	15.7	22.2	19.8	22.6	20.5	15.7	11.5	13.7	12.9
#5 7:30 - 7:45	18.2	18.6	16.8	19.4	18.0	25.5	22.9	26.2	23.9	18.1	13.6	17.0	15.8
#6 7:45 - 8:00	17.9	18.3	16.2	18.8	17.4	24.8	21.8	24.9	22.7	17.5	12.1	15.1	14.1
#7 8:00 - 8:15	14.9	15.2	13.4	15.7	14.7	20.8	18.3	20.9	19.1	14.6	10.9	13.4	12.6
#8 8:15 - 8:30	15.2	15.6	13.4	15.3	14.3	20.3	17.8	20.2	18.5	14.0	11.1	13.7	12.8
#9 8:30 - 8:45	14.7	15.0	13.4	15.2	14.3	20.2	17.9	20.3	18.6	14.1	11.1	13.9	13.0
#10 8:45 - 9:00	15.1	15.4	13.7	15.8	14.8	20.9	18.5	21.1	19.3	14.6	11.4	14.1	13.2
#11 9:00 - 9:15	13.0	13.2	11.9	13.3	12.5	17.7	15.9	17.9	16.5	12.4	10.4	13.0	12.2
#12 9:15 - 9:30	12.8	13.1	11.4	13.1	12.3	17.4	15.4	17.4	16.0	12.0	9.9	12.4	11.6

LOS

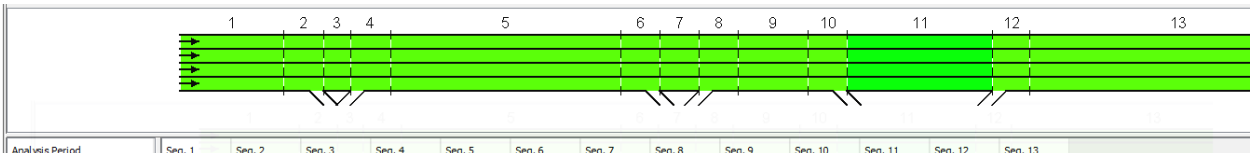

Analysis Period	Seg. 1	Seg. 2	Seg. 3	Seg. 4	Seg. 5	Seg. 6	Seg. 7	Seg. 8	Seg. 9	Seg. 10	Seg. 11	Seg. 12	Seg. 13
#1 6:30 - 6:45	B	B	B	B	B	B	B	B	B	B	A	B	B
#2 6:45 - 7:00	B	B	A	B	B	B	B	B	B	B	A	B	A
#3 7:00 - 7:15	B	B	A	B	B	B	B	B	B	B	A	B	A
#4 7:15 - 7:30	B	B	B	B	B	C	C	C	C	B	B	B	B
#5 7:30 - 7:45	C	B	B	B	B	C	C	C	C	B	B	B	B
#6 7:45 - 8:00	B	B	B	B	B	C	C	C	C	B	B	B	B
#7 8:00 - 8:15	B	B	B	B	B	C	C	B	C	B	A	B	B
#8 8:15 - 8:30	B	B	B	B	B	C	B	B	C	B	B	B	B
#9 8:30 - 8:45	B	B	B	B	B	C	B	B	C	B	B	B	B
#10 8:45 - 9:00	B	B	B	B	B	C	C	C	C	B	B	B	B
#11 9:00 - 9:15	B	B	B	B	B	B	B	B	B	B	A	B	B
#12 9:15 - 9:30	B	B	B	B	B	B	B	B	B	B	A	B	B

2021 Build AM Peak Density and Level of Service - Westbound

Density (pc/mi/ln)

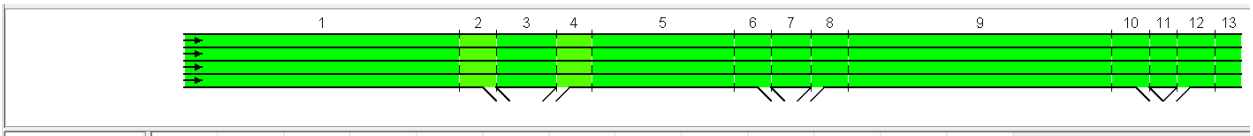

Analysis Period	Seg. 1	Seg. 2	Seg. 3	Seg. 4	Seg. 5	Seg. 6	Seg. 7	Seg. 8	Seg. 9	Seg. 10	Seg. 11	Seg. 12	Seg. 13
#1 6:30 - 6:45	9.4	9.7	7.5	9.1	8.6	8.7	8.0	8.7	8.3	8.4	7.4	8.1	7.8
#2 6:45 - 7:00	11.1	11.5	8.8	10.7	10.1	14.3	12.5	14.0	13.0	9.9	8.6	9.7	9.2
#3 7:00 - 7:15	11.3	11.8	8.6	11.7	11.0	15.5	13.6	15.5	14.3	10.9	9.6	11.0	10.4
#4 7:15 - 7:30	14.6	15.2	11.7	15.5	14.5	20.5	18.2	20.8	19.0	14.5	12.9	14.8	13.9
#5 7:30 - 7:45	16.2	16.9	12.8	16.7	15.5	22.0	19.4	22.3	20.3	15.5	13.7	15.9	14.9
#6 7:45 - 8:00	17.6	18.5	13.7	17.5	16.2	23.0	20.2	23.2	21.1	16.1	14.0	16.4	15.3
#7 8:00 - 8:15	15.2	16.0	11.7	15.0	14.0	19.9	17.5	20.0	18.2	13.9	12.4	14.4	13.5
#8 8:15 - 8:30	14.0	14.6	11.4	14.6	13.6	19.3	17.2	19.7	18.0	13.7	12.4	14.4	13.5
#9 8:30 - 8:45	13.8	14.3	11.0	14.0	13.1	18.5	16.5	18.8	17.2	13.1	11.9	13.9	13.0
#10 8:45 - 9:00	12.6	13.1	10.0	12.6	11.8	16.7	14.9	17.0	15.6	11.9	10.9	12.9	12.1
#11 9:00 - 9:15	12.0	12.4	9.8	12.1	11.4	16.1	14.4	16.3	15.0	11.4	10.4	12.0	11.4
#12 9:15 - 9:30	11.7	12.1	9.7	12.0	11.3	16.0	14.4	16.3	15.0	11.4	10.4	12.2	11.5

DocuSign Envelope ID: 5C03745C-4B01-4834-A65D-B77F558A4F46

LOS

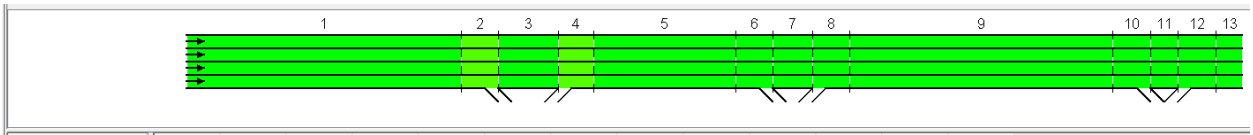

Analysis Period	Seg. 1	Seg. 2	Seg. 3	Seg. 4	Seg. 5	Seg. 6	Seg. 7	Seg. 8	Seg. 9	Seg. 10	Seg. 11	Seg. 12	Seg. 13
#1 6:30 - 6:45	A	B	A	B	A	A	A	A	A	A	A	A	A
#2 6:45 - 7:00	B	B	A	B	A	B	B	B	B	B	A	B	A
#3 7:00 - 7:15	B	B	A	B	A	B	B	B	B	B	A	B	A
#4 7:15 - 7:30	B	B	B	B	B	C	C	B	C	B	B	B	B
#5 7:30 - 7:45	B	C	B	B	B	C	C	C	C	B	B	B	B
#6 7:45 - 8:00	B	C	B	B	B	C	C	C	C	B	B	B	B
#7 8:00 - 8:15	B	C	B	B	B	C	B	B	C	B	B	B	B
#8 8:15 - 8:30	B	B	B	B	B	C	B	B	B	B	B	B	B
#9 8:30 - 8:45	B	B	B	B	B	B	B	B	B	B	B	B	B
#10 8:45 - 9:00	B	B	A	B	B	B	B	B	B	B	A	B	B
#11 9:00 - 9:15	B	B	A	B	B	B	B	B	B	B	A	B	B
#12 9:15 - 9:30	B	B	A	B	B	B	B	B	B	B	A	B	B

2021 Build PM Peak Density and Level of Service - Eastbound

Density (pc/mi/ln)



Analysis Period	Seg. 1	Seg. 2	Seg. 3	Seg. 4	Seg. 5	Seg. 6	Seg. 7	Seg. 8	Seg. 9	Seg. 10	Seg. 11	Seg. 12	Seg. 13
#1 15:30 - 15:45	14.6	14.9	13.5	15.3	14.3	14.4	13.8	15.2	14.3	14.3	12.7	15.0	14.1
#2 15:45 - 16:00	13.5	13.7	12.3	14.2	13.3	13.5	12.7	14.1	13.3	13.4	10.5	12.7	11.9
#3 16:00 - 16:15	13.1	13.3	12.1	14.5	13.6	13.7	13.1	14.7	13.8	13.9	11.9	14.3	13.4
#4 16:15 - 16:30	17.5	17.8	16.6	19.4	17.9	18.2	17.3	19.5	18.1	18.5	14.9	18.3	17.0
#5 16:30 - 16:45	20.4	20.9	19.0	22.4	20.6	21.1	19.8	22.8	21.0	21.5	17.6	22.7	20.9
#6 16:45 - 17:00	20.0	20.6	18.3	21.8	20.0	20.5	19.1	21.9	20.1	20.7	16.2	20.7	19.1
#7 17:00 - 17:15	16.7	17.1	15.2	18.3	16.9	17.2	16.2	18.5	17.2	17.5	14.4	18.1	16.8
#8 17:15 - 17:30	17.0	17.5	15.3	17.8	16.5	16.8	15.7	17.8	16.6	16.8	14.3	18.2	16.9
#9 17:30 - 17:45	16.5	16.8	15.2	17.5	16.3	16.5	15.7	17.8	16.5	16.7	14.2	18.3	16.9
#10 17:45 - 18:00	16.9	17.3	15.5	18.3	17.0	17.3	16.3	18.6	17.2	17.5	14.7	18.7	17.4
#11 18:00 - 18:15	14.5	14.7	13.4	15.3	14.4	14.5	13.9	15.6	14.6	14.7	13.0	16.7	15.6
#12 18:15 - 18:30	14.4	14.7	13.0	15.1	14.2	14.3	13.6	15.4	14.4	14.4	12.6	16.2	15.1

LOS

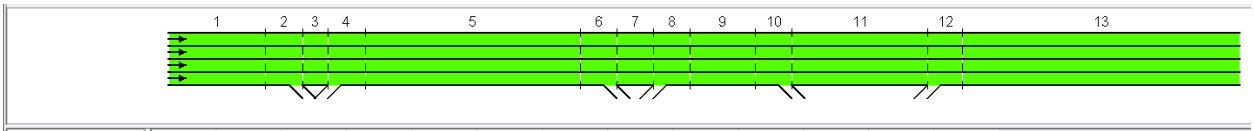

Analysis Period	Seg. 1	Seg. 2	Seg. 3	Seg. 4	Seg. 5	Seg. 6	Seg. 7	Seg. 8	Seg. 9	Seg. 10	Seg. 11	Seg. 12	Seg. 13
#1 15:30 - 15:45	B	B	B	B	B	B	B	B	B	B	B	B	B
#2 15:45 - 16:00	B	B	B	B	B	B	B	B	B	B	A	B	B
#3 16:00 - 16:15	B	B	B	B	B	B	B	B	B	B	B	B	B
#4 16:15 - 16:30	B	B	B	B	B	B	B	B	C	B	B	B	B
#5 16:30 - 16:45	C	C	C	C	C	C	C	C	C	C	B	C	C
#6 16:45 - 17:00	C	C	C	C	C	C	C	B	C	B	B	C	C
#7 17:00 - 17:15	B	B	B	B	B	B	B	B	B	B	B	B	B
#8 17:15 - 17:30	B	B	B	B	B	B	B	B	B	B	B	B	B
#9 17:30 - 17:45	B	B	B	B	B	B	B	B	B	B	B	B	B
#10 17:45 - 18:00	B	B	B	B	B	B	B	B	B	B	B	B	B
#11 18:00 - 18:15	B	B	B	B	B	B	B	B	B	B	B	B	B
#12 18:15 - 18:30	B	B	B	B	B	B	B	B	B	B	B	B	B

DocuSign Envelope ID: 5C03745C-4B01-4834-A65D-B77F558A4F46

2021 Build PM Peak Density and Level of Service - Westbound

Density (pc/mi/ln)

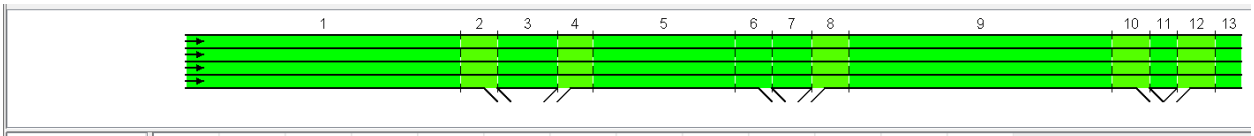

Analysis Period	Seg. 1	Seg. 2	Seg. 3	Seg. 4	Seg. 5	Seg. 6	Seg. 7	Seg. 8	Seg. 9	Seg. 10	Seg. 11	Seg. 12	Seg. 13
#1 15:30 - 15:45	9.3	9.6	7.9	9.9	9.4	9.5	8.9	9.8	9.3	9.5	8.5	9.6	9.1
#2 15:45 - 16:00	11.0	11.3	9.3	11.7	11.0	11.1	10.5	11.7	11.0	11.2	9.9	11.5	10.9
#3 16:00 - 16:15	11.2	11.6	9.2	13.3	12.4	12.5	11.8	13.5	12.6	12.8	11.6	13.6	12.7
#4 16:15 - 16:30	14.5	15.0	12.3	17.4	16.2	16.4	15.5	17.7	16.5	16.8	15.2	17.9	16.7
#5 16:30 - 16:45	16.1	16.6	13.5	18.7	17.3	17.6	16.5	19.0	17.6	18.0	16.1	19.4	18.0
#6 16:45 - 17:00	17.5	18.2	14.5	19.5	18.0	18.4	17.2	19.7	18.2	18.7	16.6	20.0	18.5
#7 17:00 - 17:15	15.1	15.7	12.4	16.9	15.7	15.9	15.0	17.1	15.9	16.2	14.7	17.5	16.3
#8 17:15 - 17:30	13.9	14.3	11.9	16.2	15.1	15.2	14.5	16.5	15.4	15.7	14.4	17.2	16.0
#9 17:30 - 17:45	13.7	14.1	11.6	15.5	14.5	14.6	13.9	15.9	14.8	15.0	13.8	16.7	15.5
#10 17:45 - 18:00	12.5	12.9	10.5	14.0	13.1	13.2	12.6	14.4	13.5	13.7	12.7	15.5	14.5
#11 18:00 - 18:15	11.9	12.2	10.2	13.3	12.5	12.6	12.0	13.6	12.8	12.9	12.0	14.3	13.4
#12 18:15 - 18:30	11.6	11.9	10.1	13.2	12.3	12.4	11.9	13.5	12.7	12.9	11.9	14.4	13.5

LOS

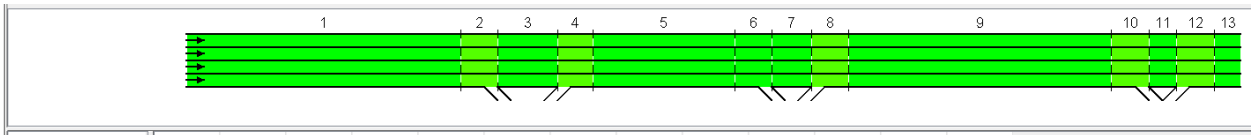

Analysis Period	Seg. 1	Seg. 2	Seg. 3	Seg. 4	Seg. 5	Seg. 6	Seg. 7	Seg. 8	Seg. 9	Seg. 10	Seg. 11	Seg. 12	Seg. 13
#1 15:30 - 15:45	A	B	A	B	A	A	A	B	A	B	A	B	A
#2 15:45 - 16:00	B	B	A	B	B	B	A	B	B	B	A	B	A
#3 16:00 - 16:15	B	B	A	B	B	B	B	B	B	B	B	B	B
#4 16:15 - 16:30	B	B	B	B	B	B	B	B	B	B	B	B	B
#5 16:30 - 16:45	B	C	B	C	B	B	B	B	B	B	B	B	B
#6 16:45 - 17:00	B	C	B	C	C	B	B	B	C	B	B	B	C
#7 17:00 - 17:15	B	C	B	B	B	B	B	B	B	B	B	B	B
#8 17:15 - 17:30	B	B	B	B	B	B	B	B	B	B	B	B	B
#9 17:30 - 17:45	B	B	B	B	B	B	B	B	B	B	B	B	B
#10 17:45 - 18:00	B	B	A	B	B	B	B	B	B	B	B	B	B
#11 18:00 - 18:15	B	B	A	B	B	B	B	B	B	B	B	B	B
#12 18:15 - 18:30	B	B	A	B	B	B	B	B	B	B	B	B	B

DocuSign Envelope ID: 5C03745C-4B01-4834-A65D-B77F558A4F46

2021 Build (Left Entrance/Exit for HE-0001 Westbound Ramps)

2021 Build (Left Entrance/Exit) AM Peak Density and Level of Service - Eastbound

This scenario has the same results as 2021 Build as there is no change in the eastbound direction.

2021 Build (Left Entrance/Exit) AM Peak Density and Level of Service - Westbound

It is worth noting that this scenario has minimal differences from the 2021 Build.

Density (pc/mi/ln)

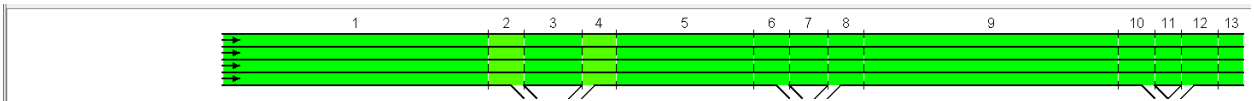

Analysis Period	Seg. 1	Seg. 2	Seg. 3	Seg. 4	Seg. 5	Seg. 6	Seg. 7	Seg. 8	Seg. 9	Seg. 10	Seg. 11	Seg. 12	Seg. 13
#1 6:30 - 6:45	9.4	9.7	7.5	9.1	8.6	8.8	8.0	8.7	8.3	8.4	7.4	8.1	7.8
#2 6:45 - 7:00	11.1	11.5	8.8	10.7	10.1	14.4	12.5	14.1	13.0	9.9	8.6	9.7	9.2
#3 7:00 - 7:15	11.3	11.8	8.6	11.7	11.0	15.6	13.6	15.5	14.3	10.9	9.6	11.0	10.4
#4 7:15 - 7:30	14.6	15.2	11.7	15.5	14.5	20.6	18.2	20.9	19.0	14.5	12.9	14.8	13.9
#5 7:30 - 7:45	16.2	16.9	12.8	16.7	15.5	22.1	19.4	22.4	20.3	15.5	13.7	15.9	14.9
#6 7:45 - 8:00	17.6	18.5	13.7	17.5	16.2	23.1	20.2	23.3	21.1	16.1	14.0	16.4	15.3
#7 8:00 - 8:15	15.2	16.0	11.7	15.0	14.0	19.9	17.5	20.0	18.2	13.9	12.4	14.4	13.5
#8 8:15 - 8:30	14.0	14.6	11.4	14.6	13.6	19.4	17.2	19.7	18.0	13.7	12.4	14.4	13.5
#9 8:30 - 8:45	13.8	14.3	11.0	14.0	13.1	18.6	16.5	18.9	17.2	13.1	11.9	13.9	13.0
#10 8:45 - 9:00	12.6	13.1	10.0	12.6	11.8	16.8	14.9	17.1	15.6	11.9	10.9	12.9	12.1
#11 9:00 - 9:15	12.0	12.4	9.8	12.1	11.4	16.2	14.4	16.4	15.0	11.4	10.4	12.0	11.4
#12 9:15 - 9:30	11.7	12.1	9.7	12.0	11.3	16.1	14.4	16.3	15.0	11.4	10.4	12.2	11.5

LOS

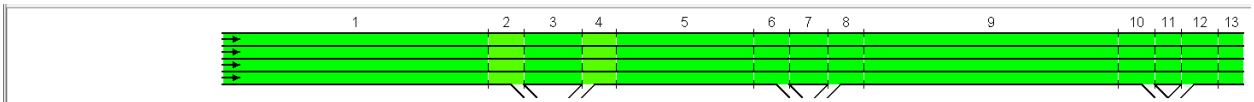

Analysis Period	Seg. 1	Seg. 2	Seg. 3	Seg. 4	Seg. 5	Seg. 6	Seg. 7	Seg. 8	Seg. 9	Seg. 10	Seg. 11	Seg. 12	Seg. 13
#1 6:30 - 6:45	A	B	A	B	A	A	A	A	A	A	A	A	A
#2 6:45 - 7:00	B	B	A	B	A	B	B	B	B	B	A	B	A
#3 7:00 - 7:15	B	B	A	B	A	B	B	B	B	B	A	B	A
#4 7:15 - 7:30	B	B	B	B	B	C	C	C	C	B	B	B	B
#5 7:30 - 7:45	B	C	B	B	B	C	C	C	C	B	B	B	B
#6 7:45 - 8:00	B	C	B	B	B	C	C	C	C	B	B	B	B
#7 8:00 - 8:15	B	C	B	B	B	C	B	C	C	B	B	B	B
#8 8:15 - 8:30	B	B	B	B	B	C	B	C	B	B	B	B	B
#9 8:30 - 8:45	B	B	B	B	B	C	B	B	B	B	B	B	B
#10 8:45 - 9:00	B	B	A	B	B	B	B	B	B	B	A	B	B
#11 9:00 - 9:15	B	B	A	B	B	B	B	B	B	B	A	B	B
#12 9:15 - 9:30	B	B	A	B	B	B	B	B	B	B	A	B	B

DocuSign Envelope ID: 5C03745C-4B01-4834-A65D-B77F558A4F46

2021 Build (Left Entrance/Exit) PM Peak Density and Level of Service - Eastbound

This scenario has the same results as 2021 Build as there is no change in the eastbound direction.

2021 Build (Left Entrance/Exit) PM Peak Density and Level of Service - Westbound

Density (pc/mi/ln)

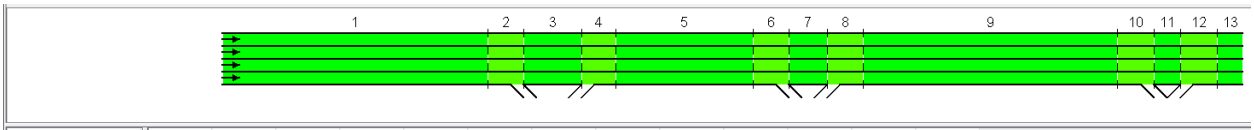

Analysis Period	Seg. 1	Seg. 2	Seg. 3	Seg. 4	Seg. 5	Seg. 6	Seg. 7	Seg. 8	Seg. 9	Seg. 10	Seg. 11	Seg. 12	Seg. 13
#1 15:30 - 15:45	9.3	9.6	7.9	9.9	9.4	9.5	8.9	9.8	9.3	9.5	8.5	9.6	9.1
#2 15:45 - 16:00	11.0	11.3	9.3	11.7	11.0	11.2	10.5	11.7	11.0	11.2	9.9	11.5	10.9
#3 16:00 - 16:15	11.2	11.6	9.2	13.3	12.4	12.6	11.8	13.5	12.6	12.8	11.6	13.6	12.7
#4 16:15 - 16:30	14.5	15.0	12.3	17.4	16.2	16.5	15.5	17.7	16.5	16.8	15.2	17.9	16.7
#5 16:30 - 16:45	16.1	16.6	13.5	18.7	17.3	17.7	16.5	19.0	17.6	18.0	16.1	19.4	18.0
#6 16:45 - 17:00	17.5	18.2	14.5	19.5	18.0	18.5	17.2	19.7	18.2	18.7	16.6	20.0	18.5
#7 17:00 - 17:15	15.1	15.7	12.4	16.9	15.7	16.0	15.0	17.1	15.9	16.2	14.7	17.5	16.3
#8 17:15 - 17:30	13.9	14.3	11.9	16.2	15.1	15.3	14.5	16.5	15.4	15.7	14.4	17.2	16.0
#9 17:30 - 17:45	13.7	14.1	11.6	15.5	14.5	14.7	13.9	15.9	14.8	15.0	13.8	16.7	15.5
#10 17:45 - 18:00	12.5	12.9	10.5	14.0	13.1	13.3	12.6	14.4	13.5	13.7	12.7	15.5	14.5
#11 18:00 - 18:15	11.9	12.2	10.2	13.3	12.5	12.7	12.0	13.6	12.8	12.9	12.0	14.3	13.4
#12 18:15 - 18:30	11.6	11.9	10.1	13.2	12.3	12.5	11.9	13.5	12.7	12.9	11.9	14.4	13.5

LOS

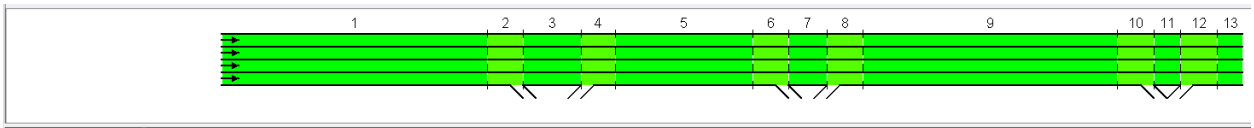

Analysis Period	Seg. 1	Seg. 2	Seg. 3	Seg. 4	Seg. 5	Seg. 6	Seg. 7	Seg. 8	Seg. 9	Seg. 10	Seg. 11	Seg. 12	Seg. 13
#1 15:30 - 15:45	A	B	A	B	A	B	A	B	A	B	A	B	A
#2 15:45 - 16:00	B	B	A	B	B	B	A	B	B	B	A	B	A
#3 16:00 - 16:15	B	B	A	B	B	B	B	B	B	B	B	B	B
#4 16:15 - 16:30	B	B	B	B	B	B	B	B	B	B	B	B	B
#5 16:30 - 16:45	B	C	B	C	B	B	B	B	B	B	B	B	B
#6 16:45 - 17:00	B	C	B	C	C	C	B	B	C	B	B	B	C
#7 17:00 - 17:15	B	C	B	B	B	B	B	B	B	B	B	B	B
#8 17:15 - 17:30	B	B	B	B	B	B	B	B	B	B	B	B	B
#9 17:30 - 17:45	B	B	B	B	B	B	B	B	B	B	B	B	B
#10 17:45 - 18:00	B	B	A	B	B	B	B	B	B	B	B	B	B
#11 18:00 - 18:15	B	B	A	B	B	B	B	B	B	B	B	B	B
#12 18:15 - 18:30	B	B	A	B	B	B	B	B	B	B	B	B	B

DocuSign Envelope ID: 5C03745C-4B01-4834-A65D-B77F558A4F46

2040 Build

2040 Build AM Peak Density and Level of Service - Eastbound

Density (pc/mi/ln)



Analysis Period	Seg. 1	Seg. 2	Seg. 3	Seg. 4	Seg. 5	Seg. 6	Seg. 7	Seg. 8	Seg. 9	Seg. 10	Seg. 11	Seg. 12	Seg. 13
#1 6:30 - 6:45	17.9	18.3	16.7	19.0	17.6	17.9	16.4	18.3	17.0	17.2	14.1	16.4	15.3
#2 6:45 - 7:00	16.5	16.8	15.2	17.6	16.4	16.8	14.9	16.7	15.5	16.1	10.7	12.7	12.0
#3 7:00 - 7:15	16.1	16.4	15.0	17.9	16.6	16.9	15.4	17.5	16.3	16.6	13.0	15.3	14.3
#4 7:15 - 7:30	21.5	22.0	20.5	24.0	22.1	22.6	20.5	23.4	21.5	22.4	15.8	19.0	17.6
#5 7:30 - 7:45	25.7	25.8	23.9	27.9	26.2	26.2	23.8	27.3	25.5	26.0	18.9	23.7	21.8
#6 7:45 - 8:00	25.2	25.4	23.0	27.1	25.3	25.6	22.6	26.0	24.1	25.1	16.8	20.9	19.2
#7 8:00 - 8:15	20.5	21.0	18.9	22.6	20.8	21.4	19.0	22.0	20.2	21.0	15.3	18.7	17.4
#8 8:15 - 8:30	20.9	21.5	19.0	22.1	20.4	21.0	18.6	21.2	19.6	20.1	15.6	19.2	17.8
#9 8:30 - 8:45	20.2	20.8	18.8	21.8	20.1	20.6	18.6	21.2	19.6	20.1	15.5	19.3	17.8
#10 8:45 - 9:00	20.7	21.3	19.2	22.7	20.9	21.5	19.2	22.1	20.4	21.1	15.9	19.7	18.2
#11 9:00 - 9:15	17.8	18.2	16.6	19.0	17.6	18.0	16.5	18.7	17.4	17.7	14.6	18.1	16.8
#12 9:15 - 9:30	17.6	18.0	16.1	18.8	17.4	17.8	16.0	18.3	17.0	17.3	13.9	17.3	16.1

LOS

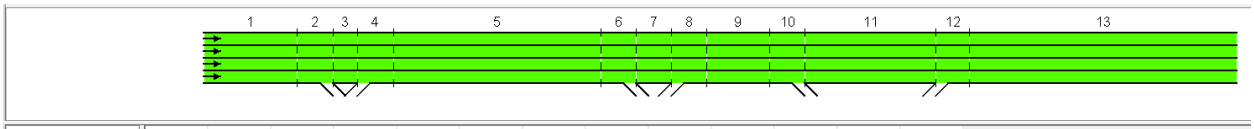

Analysis Period	Seg. 1	Seg. 2	Seg. 3	Seg. 4	Seg. 5	Seg. 6	Seg. 7	Seg. 8	Seg. 9	Seg. 10	Seg. 11	Seg. 12	Seg. 13
#1 6:30 - 6:45	B	B	B	B	B	B	B	B	B	B	B	B	B
#2 6:45 - 7:00	B	B	B	B	B	B	B	B	B	B	A	B	B
#3 7:00 - 7:15	B	B	B	B	B	B	B	B	B	B	B	B	B
#4 7:15 - 7:30	C	C	C	C	C	C	C	C	C	C	B	B	B
#5 7:30 - 7:45	C	C	C	C	D	C	C	C	C	C	C	C	C
#6 7:45 - 8:00	C	C	C	C	C	C	C	C	C	C	B	C	C
#7 8:00 - 8:15	C	C	C	C	C	C	C	C	C	C	B	B	B
#8 8:15 - 8:30	C	C	C	C	C	C	C	B	C	B	B	B	B
#9 8:30 - 8:45	C	C	C	B	C	C	C	B	C	B	B	B	B
#10 8:45 - 9:00	C	C	C	C	C	C	C	C	C	C	B	B	C
#11 9:00 - 9:15	B	B	B	B	B	B	B	B	B	B	B	B	B
#12 9:15 - 9:30	B	B	B	B	B	B	B	B	B	B	B	B	B

2040 Build AM Peak Density and Level of Service - Westbound

Density (pc/mi/ln)

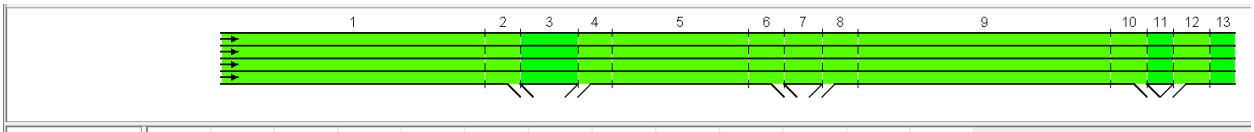

Analysis Period	Seg. 1	Seg. 2	Seg. 3	Seg. 4	Seg. 5	Seg. 6	Seg. 7	Seg. 8	Seg. 9	Seg. 10	Seg. 11	Seg. 12	Seg. 13
#1 6:30 - 6:45	12.8	13.3	10.5	12.8	12.0	12.2	11.1	12.3	11.6	11.8	10.2	11.2	10.6
#2 6:45 - 7:00	15.2	15.8	12.3	15.1	14.1	14.4	12.9	14.5	13.6	14.0	11.9	13.4	12.6
#3 7:00 - 7:15	15.4	16.1	12.0	16.6	15.4	15.7	14.2	16.3	15.2	15.6	13.6	15.4	14.4
#4 7:15 - 7:30	20.0	20.9	16.3	22.2	20.4	20.9	18.9	22.0	20.2	20.9	18.1	20.7	19.1
#5 7:30 - 7:45	22.3	23.4	17.8	23.9	21.9	22.5	20.1	23.5	21.6	22.3	19.2	22.3	20.5
#6 7:45 - 8:00	24.6	25.6	19.1	25.0	23.1	23.6	20.9	24.4	22.5	23.2	19.7	22.9	21.0
#7 8:00 - 8:15	20.9	22.1	16.3	21.5	19.7	20.3	18.2	21.1	19.4	20.0	17.5	20.1	18.6
#8 8:15 - 8:30	19.2	20.0	15.8	20.7	19.1	19.6	17.9	20.7	19.1	19.6	17.5	20.1	18.6
#9 8:30 - 8:45	18.8	19.7	15.3	19.9	18.4	18.8	17.1	19.8	18.3	18.8	16.8	19.4	17.9
#10 8:45 - 9:00	17.2	17.9	13.9	17.8	16.6	16.9	15.5	17.9	16.7	17.0	15.4	17.9	16.7
#11 9:00 - 9:15	16.4	17.0	13.6	17.1	16.0	16.2	15.0	17.1	15.9	16.2	14.7	16.8	15.6
#12 9:15 - 9:30	16.0	16.5	13.5	17.0	15.8	16.1	14.9	17.1	15.9	16.2	14.7	16.9	15.8

DocuSign Envelope ID: 5C03745C-4B01-4834-A65D-B77F558A4F46

LOS

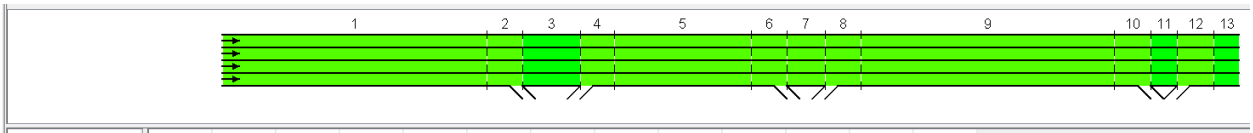

Analysis Period	Seg. 1	Seg. 2	Seg. 3	Seg. 4	Seg. 5	Seg. 6	Seg. 7	Seg. 8	Seg. 9	Seg. 10	Seg. 11	Seg. 12	Seg. 13
#1 6:30 - 6:45	B	B	A	B	B	B	B	B	B	B	A	B	A
#2 6:45 - 7:00	B	C	B	B	B	B	B	B	B	B	B	B	B
#3 7:00 - 7:15	B	C	B	B	B	B	B	B	B	B	B	B	B
#4 7:15 - 7:30	C	C	B	C	C	C	C	C	C	C	C	B	C
#5 7:30 - 7:45	C	D	B	C	C	C	C	C	C	C	C	C	C
#6 7:45 - 8:00	C	D	C	C	C	C	C	C	C	C	C	C	C
#7 8:00 - 8:15	C	D	B	C	C	C	C	B	C	C	B	B	C
#8 8:15 - 8:30	C	C	B	C	C	B	B	B	C	C	B	B	C
#9 8:30 - 8:45	C	C	B	C	C	B	B	B	C	B	B	B	B
#10 8:45 - 9:00	B	C	B	B	B	B	B	B	B	B	B	B	B
#11 9:00 - 9:15	B	C	B	B	B	B	B	B	B	B	B	B	B
#12 9:15 - 9:30	B	C	B	B	B	B	B	B	B	B	B	B	B

2040 Build PM Peak Density and Level of Service - Eastbound

Density (pc/mi/ln)



Analysis Period	Seg. 1	Seg. 2	Seg. 3	Seg. 4	Seg. 5	Seg. 6	Seg. 7	Seg. 8	Seg. 9	Seg. 10	Seg. 11	Seg. 12	Seg. 13
#1 15:30 - 15:45	20.1	20.6	18.9	21.8	20.1	20.5	19.1	21.7	20.0	20.4	17.6	21.0	19.4
#2 15:45 - 16:00	18.5	18.9	17.2	20.4	18.8	19.2	17.6	20.1	18.6	19.1	14.6	17.6	16.4
#3 16:00 - 16:15	18.0	18.4	16.9	20.8	19.1	19.6	18.2	21.1	19.4	19.9	16.7	20.1	18.6
#4 16:15 - 16:30	24.6	24.7	23.4	27.7	26.0	26.0	24.4	28.0	26.2	26.4	20.6	25.5	23.6
#5 16:30 - 16:45	30.2	30.2	28.0	32.5	31.9	31.9	29.5	33.0	32.7	32.7	25.1	32.2	31.3
#6 16:45 - 17:00	29.4	29.4	26.8	31.6	30.8	30.8	28.0	31.7	30.8	30.8	22.8	29.2	27.5
#7 17:00 - 17:15	23.2	23.6	21.4	26.4	24.5	24.7	22.8	26.7	24.8	25.2	20.1	25.5	23.5
#8 17:15 - 17:30	23.8	24.2	21.6	25.7	23.8	24.2	22.1	25.7	23.8	24.2	20.1	25.6	23.7
#9 17:30 - 17:45	22.9	23.3	21.3	25.2	23.3	23.7	21.9	25.5	23.6	24.0	19.8	25.6	23.6
#10 17:45 - 18:00	23.5	23.9	21.8	26.4	24.5	24.7	22.9	26.8	24.9	25.2	20.6	26.4	24.4
#11 18:00 - 18:15	19.9	20.4	18.8	21.9	20.2	20.6	19.3	22.3	20.5	20.9	18.2	23.4	21.5
#12 18:15 - 18:30	19.7	20.2	18.2	21.8	20.0	20.5	18.9	22.1	20.3	20.8	17.8	22.8	20.9

LOS

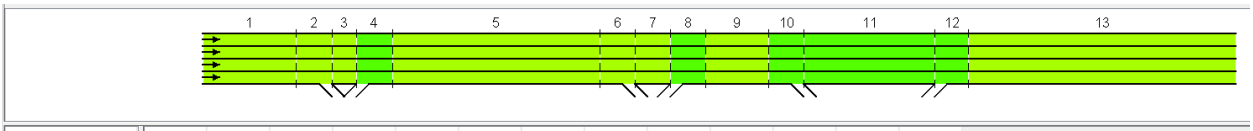

Analysis Period	Seg. 1	Seg. 2	Seg. 3	Seg. 4	Seg. 5	Seg. 6	Seg. 7	Seg. 8	Seg. 9	Seg. 10	Seg. 11	Seg. 12	Seg. 13
#1 15:30 - 15:45	C	C	C	B	C	C	C	B	C	B	B	B	C
#2 15:45 - 16:00	C	B	B	B	C	B	B	B	C	B	B	B	B
#3 16:00 - 16:15	C	B	B	C	C	B	C	B	C	B	B	B	C
#4 16:15 - 16:30	C	C	C	C	C	C	C	C	D	C	C	C	C
#5 16:30 - 16:45	D	D	D	D	D	D	D	D	D	C	C	D	D
#6 16:45 - 17:00	D	D	D	C	D	D	D	C	D	C	C	C	D
#7 17:00 - 17:15	C	C	C	C	C	C	C	C	C	C	C	C	C
#8 17:15 - 17:30	C	C	C	C	C	C	C	C	C	C	C	C	C
#9 17:30 - 17:45	C	C	C	C	C	C	C	C	C	C	C	C	C
#10 17:45 - 18:00	C	C	C	C	C	C	C	C	C	C	C	C	C
#11 18:00 - 18:15	C	C	C	C	C	C	C	C	C	B	C	C	C
#12 18:15 - 18:30	C	C	C	C	C	C	C	C	C	B	B	C	C

DocuSign Envelope ID: 5C03745C-4B01-4834-A65D-B77F558A4F46

2040 Build PM Peak Density and Level of Service - Westbound

Density (pc/mi/ln)

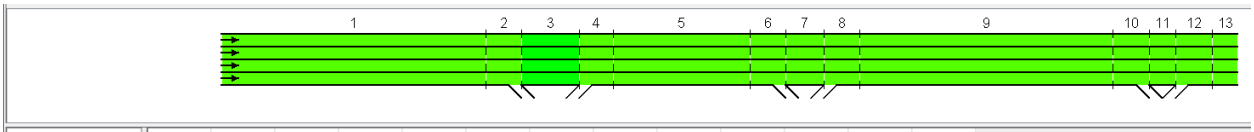

Analysis Period	Seg. 1	Seg. 2	Seg. 3	Seg. 4	Seg. 5	Seg. 6	Seg. 7	Seg. 8	Seg. 9	Seg. 10	Seg. 11	Seg. 12	Seg. 13
#1 15:30 - 15:45	12.7	13.1	11.0	14.0	13.1	13.3	12.3	14.0	13.1	13.4	11.8	13.2	12.4
#2 15:45 - 16:00	15.1	15.5	12.9	16.6	15.4	15.7	14.4	16.6	15.5	15.9	13.8	15.9	14.8
#3 16:00 - 16:15	15.3	15.8	12.8	19.0	17.5	17.8	16.5	19.5	18.0	18.5	16.5	19.0	17.7
#4 16:15 - 16:30	19.8	20.6	17.1	25.1	23.0	23.4	21.6	25.8	23.9	24.3	21.6	25.2	23.3
#5 16:30 - 16:45	22.1	23.0	18.8	27.0	24.9	25.1	23.2	27.7	25.9	26.1	23.1	27.3	25.4
#6 16:45 - 17:00	24.4	25.2	20.2	28.3	26.3	26.3	24.2	28.7	27.1	27.1	23.7	28.0	26.2
#7 17:00 - 17:15	20.7	21.7	17.3	24.3	22.3	22.7	20.8	24.8	22.9	23.4	20.8	24.5	22.6
#8 17:15 - 17:30	19.0	19.7	16.5	23.1	21.2	21.7	20.1	24.0	22.1	22.6	20.4	24.0	22.2
#9 17:30 - 17:45	18.7	19.4	16.1	22.1	20.3	20.8	19.3	23.0	21.1	21.7	19.6	23.3	21.4
#10 17:45 - 18:00	17.1	17.6	14.6	19.9	18.3	18.7	17.4	20.9	19.2	19.7	18.0	21.6	19.9
#11 18:00 - 18:15	16.3	16.8	14.2	18.9	17.5	17.8	16.6	19.6	18.1	18.5	16.9	19.8	18.3
#12 18:15 - 18:30	15.9	16.3	14.0	18.6	17.3	17.5	16.5	19.5	18.0	18.4	16.8	19.9	18.4

LOS

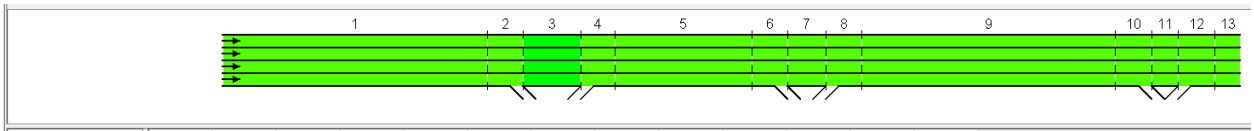

Analysis Period	Seg. 1	Seg. 2	Seg. 3	Seg. 4	Seg. 5	Seg. 6	Seg. 7	Seg. 8	Seg. 9	Seg. 10	Seg. 11	Seg. 12	Seg. 13
#1 15:30 - 15:45	B	B	A	B	B	B	B	B	B	B	B	B	B
#2 15:45 - 16:00	B	B	B	B	B	B	B	B	B	B	B	B	B
#3 16:00 - 16:15	B	C	B	C	B	B	B	B	C	B	B	B	B
#4 16:15 - 16:30	C	C	B	C	C	C	C	C	C	C	C	C	C
#5 16:30 - 16:45	C	C	C	C	C	C	C	C	C	C	C	C	C
#6 16:45 - 17:00	C	D	C	D	D	C	C	C	D	D	C	C	D
#7 17:00 - 17:15	C	C	B	C	C	C	C	C	C	C	C	C	C
#8 17:15 - 17:30	C	C	B	C	C	C	C	C	C	C	C	C	C
#9 17:30 - 17:45	C	C	B	C	C	C	C	C	C	C	C	C	C
#10 17:45 - 18:00	B	C	B	C	C	B	B	B	C	C	B	C	C
#11 18:00 - 18:15	B	C	B	B	B	B	B	B	C	B	B	B	C
#12 18:15 - 18:30	B	B	B	B	B	B	B	B	C	B	B	B	C

DocuSign Envelope ID: 5C03745C-4B01-4834-A65D-B77F558A4F46

2040 Build (Left Entrance/Exit for HE-0001 Westbound Ramps)

2040 Build (Left Entrance/Exit) AM Peak Density and Level of Service - Eastbound

This scenario has the same results as 2040 Build as there is no change in the eastbound direction.

2040 Build (Left Entrance/Exit) AM Peak Density and Level of Service - Westbound

Density (pc/mi/ln)

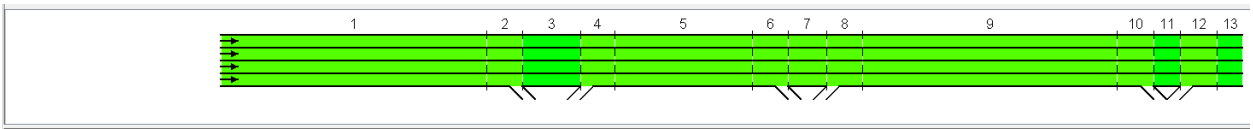

Analysis Period	Seg. 1	Seg. 2	Seg. 3	Seg. 4	Seg. 5	Seg. 6	Seg. 7	Seg. 8	Seg. 9	Seg. 10	Seg. 11	Seg. 12	Seg. 13
#1 6:30 - 6:45	12.8	13.3	10.5	12.8	12.0	12.2	11.1	12.3	11.6	11.8	10.2	11.2	10.6
#2 6:45 - 7:00	15.2	15.8	12.3	15.1	14.1	14.4	12.9	14.5	13.6	14.0	11.9	13.4	12.6
#3 7:00 - 7:15	15.4	16.1	12.0	16.6	15.4	15.7	14.2	16.3	15.2	15.6	13.6	15.4	14.4
#4 7:15 - 7:30	20.0	20.9	16.3	22.2	20.4	20.9	18.9	22.0	20.2	20.9	18.1	20.7	19.1
#5 7:30 - 7:45	22.3	23.4	17.8	23.9	21.9	22.5	20.1	23.5	21.6	22.3	19.2	22.3	20.5
#6 7:45 - 8:00	24.6	25.6	19.1	25.0	23.1	23.6	20.9	24.4	22.5	23.2	19.7	22.9	21.0
#7 8:00 - 8:15	20.9	22.1	16.3	21.5	19.7	20.3	18.2	21.1	19.4	20.0	17.5	20.1	18.6
#8 8:15 - 8:30	19.2	20.0	15.8	20.7	19.1	19.6	17.9	20.7	19.1	19.6	17.5	20.1	18.6
#9 8:30 - 8:45	18.8	19.7	15.3	19.9	18.4	18.8	17.1	19.8	18.3	18.8	16.8	19.4	17.9
#10 8:45 - 9:00	17.2	17.9	13.9	17.8	16.6	16.9	15.5	17.9	16.7	17.0	15.4	17.9	16.7
#11 9:00 - 9:15	16.4	17.0	13.6	17.1	16.0	16.2	15.0	17.1	15.9	16.2	14.7	16.8	15.6
#12 9:15 - 9:30	16.0	16.5	13.5	17.0	15.8	16.1	14.9	17.1	15.9	16.2	14.7	16.9	15.8

LOS

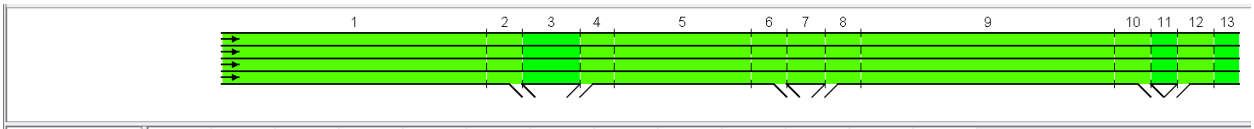

Analysis Period	Seg. 1	Seg. 2	Seg. 3	Seg. 4	Seg. 5	Seg. 6	Seg. 7	Seg. 8	Seg. 9	Seg. 10	Seg. 11	Seg. 12	Seg. 13
#1 6:30 - 6:45	B	B	A	B	B	B	B	B	B	B	A	B	A
#2 6:45 - 7:00	B	C	B	B	B	B	B	B	B	B	B	B	B
#3 7:00 - 7:15	B	C	B	B	B	B	B	B	B	B	B	B	B
#4 7:15 - 7:30	C	C	B	C	C	C	C	C	C	C	C	B	C
#5 7:30 - 7:45	C	D	B	C	C	C	C	C	C	C	C	C	C
#6 7:45 - 8:00	C	D	C	C	C	C	C	C	C	C	C	C	C
#7 8:00 - 8:15	C	D	B	C	C	C	C	B	C	C	B	B	C
#8 8:15 - 8:30	C	C	B	C	C	B	B	B	C	C	B	B	C
#9 8:30 - 8:45	C	C	B	C	C	B	B	B	C	B	B	B	B
#10 8:45 - 9:00	B	C	B	B	B	B	B	B	B	B	B	B	B
#11 9:00 - 9:15	B	C	B	B	B	B	B	B	B	B	B	B	B
#12 9:15 - 9:30	B	C	B	B	B	B	B	B	B	B	B	B	B

2040 Build (Left Entrance/Exit) PM Peak Density and Level of Service - Eastbound

This scenario has the same results as 2040 Build as there is no change in the eastbound direction.

DocuSign Envelope ID: 5C03745C-4B01-4834-A65D-B77F558A4F46

2040 Build (Left Entrance/Exit) PM Peak Density and Level of Service - Westbound

Density (pc/mi/ln)

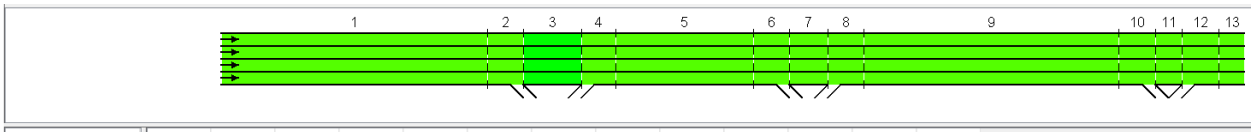

Analysis Period	Seg. 1	Seg. 2	Seg. 3	Seg. 4	Seg. 5	Seg. 6	Seg. 7	Seg. 8	Seg. 9	Seg. 10	Seg. 11	Seg. 12	Seg. 13
#1 15:30 - 15:45	12.7	13.1	11.0	14.0	13.1	13.3	12.3	14.0	13.1	13.4	11.8	13.2	12.4
#2 15:45 - 16:00	15.1	15.5	12.9	16.6	15.4	15.7	14.4	16.6	15.5	15.9	13.8	15.9	14.8
#3 16:00 - 16:15	15.3	15.8	12.8	19.0	17.5	17.8	16.5	19.5	18.0	18.5	16.5	19.0	17.7
#4 16:15 - 16:30	19.8	20.6	17.1	25.1	23.0	23.4	21.6	25.8	23.9	24.3	21.6	25.2	23.3
#5 16:30 - 16:45	22.1	23.0	18.8	27.0	24.9	25.1	23.2	27.7	25.9	26.1	23.1	27.3	25.4
#6 16:45 - 17:00	24.4	25.2	20.2	28.3	26.3	26.3	24.2	28.7	27.1	27.1	23.7	28.0	26.2
#7 17:00 - 17:15	20.7	21.7	17.3	24.3	22.3	22.7	20.8	24.8	22.9	23.4	20.8	24.5	22.6
#8 17:15 - 17:30	19.0	19.7	16.5	23.1	21.2	21.7	20.1	24.0	22.1	22.6	20.4	24.0	22.2
#9 17:30 - 17:45	18.7	19.4	16.1	22.1	20.3	20.8	19.3	23.0	21.1	21.7	19.6	23.3	21.4
#10 17:45 - 18:00	17.1	17.6	14.6	19.9	18.3	18.7	17.4	20.9	19.2	19.7	18.0	21.6	19.9
#11 18:00 - 18:15	16.3	16.8	14.2	18.9	17.5	17.8	16.6	19.6	18.1	18.5	16.9	19.8	18.3
#12 18:15 - 18:30	15.9	16.3	14.0	18.6	17.3	17.5	16.5	19.5	18.0	18.4	16.8	19.9	18.4

LOS



Analysis Period	Seg. 1	Seg. 2	Seg. 3	Seg. 4	Seg. 5	Seg. 6	Seg. 7	Seg. 8	Seg. 9	Seg. 10	Seg. 11	Seg. 12	Seg. 13
#1 15:30 - 15:45	B	B	A	B	B	B	B	B	B	B	B	B	B
#2 15:45 - 16:00	B	B	B	B	B	B	B	B	B	B	B	B	B
#3 16:00 - 16:15	B	C	B	C	B	B	B	B	C	B	B	B	B
#4 16:15 - 16:30	C	C	B	C	C	C	C	C	C	C	C	C	C
#5 16:30 - 16:45	C	C	C	C	C	C	C	C	C	C	C	C	C
#6 16:45 - 17:00	C	D	C	D	D	C	C	C	D	D	C	C	D
#7 17:00 - 17:15	C	C	B	C	C	C	C	C	C	C	C	C	C
#8 17:15 - 17:30	C	C	B	C	C	C	C	C	C	C	C	C	C
#9 17:30 - 17:45	C	C	B	C	C	C	C	C	C	C	C	C	C
#10 17:45 - 18:00	B	C	B	C	C	B	B	B	C	C	B	C	C
#11 18:00 - 18:15	B	C	B	B	B	B	B	B	C	B	B	B	C
#12 18:15 - 18:30	B	B	B	B	B	B	B	B	C	B	B	B	C

DocuSign Envelope ID: 5C03745C-4B01-4834-A65D-B77F558A4F46

2045 No-Build

2045 No-Build AM Peak Density and Level of Service - Eastbound

Density (pc/mi/ln)

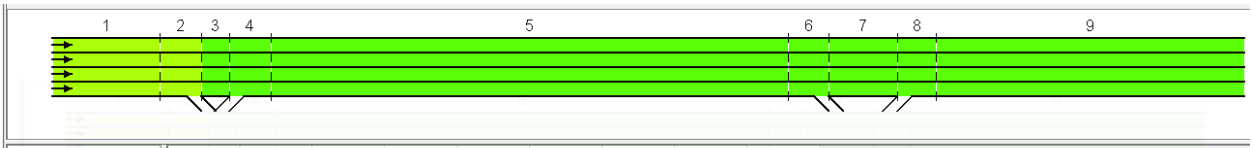

Analysis Period	Seg. 1	Seg. 2	Seg. 3	Seg. 4	Seg. 5	Seg. 6	Seg. 7	Seg. 8	Seg. 9
#1 6:30 - 6:45	19.1	19.7	16.9	19.3	17.9	18.2	15.1	17.8	16.6
#2 6:45 - 7:00	17.6	18.1	15.3	17.9	16.6	17.2	12.0	14.3	13.4
#3 7:00 - 7:15	17.1	17.6	15.2	18.3	17.0	17.3	13.8	16.4	15.3
#4 7:15 - 7:30	23.1	23.6	21.1	24.9	23.0	23.8	17.3	21.1	19.4
#5 7:30 - 7:45	28.0	28.0	24.5	28.8	27.1	27.3	20.3	26.0	24.1
#6 7:45 - 8:00	27.3	27.4	23.2	27.6	25.9	26.5	18.3	23.3	21.4
#7 8:00 - 8:15	21.9	22.6	18.9	23.0	21.1	21.9	16.3	20.4	18.8
#8 8:15 - 8:30	22.4	23.2	18.8	22.1	20.4	21.0	16.5	20.7	19.1
#9 8:30 - 8:45	21.6	22.3	19.0	22.2	20.4	21.0	16.5	20.9	19.3
#10 8:45 - 9:00	22.2	22.9	19.3	23.1	21.3	21.9	16.9	21.3	19.6
#11 9:00 - 9:15	18.9	19.5	16.9	19.4	18.0	18.3	15.3	19.4	17.9
#12 9:15 - 9:30	18.7	19.4	16.1	18.9	17.5	17.8	14.6	18.5	17.1

LOS

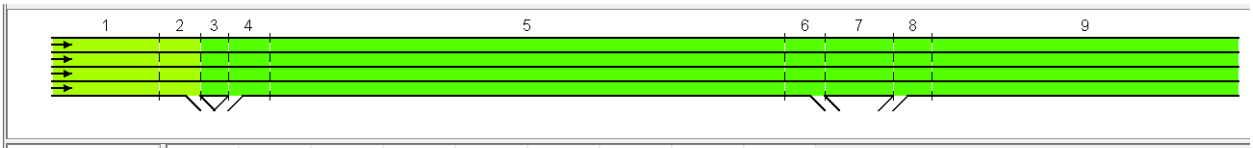

Analysis Period	Seg. 1	Seg. 2	Seg. 3	Seg. 4	Seg. 5	Seg. 6	Seg. 7	Seg. 8	Seg. 9
#1 6:30 - 6:45	C	C	B	B	B	B	B	B	B
#2 6:45 - 7:00	B	B	B	B	B	B	B	B	B
#3 7:00 - 7:15	B	B	B	B	B	B	B	B	B
#4 7:15 - 7:30	C	C	C	C	C	C	B	C	C
#5 7:30 - 7:45	D	D	C	C	D	C	C	C	C
#6 7:45 - 8:00	D	D	C	C	C	C	C	C	C
#7 8:00 - 8:15	C	C	C	C	C	C	B	C	C
#8 8:15 - 8:30	C	C	C	C	C	B	B	C	C
#9 8:30 - 8:45	C	C	C	C	C	B	B	C	C
#10 8:45 - 9:00	C	C	C	C	C	C	B	C	C
#11 9:00 - 9:15	C	C	B	B	B	B	B	B	B
#12 9:15 - 9:30	C	C	B	B	B	B	B	B	B

2045 No-Build AM Peak Density and Level of Service - Westbound

Density (pc/mi/ln)

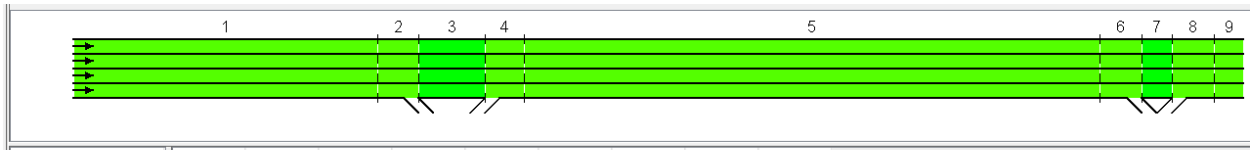

Analysis Period	Seg. 1	Seg. 2	Seg. 3	Seg. 4	Seg. 5	Seg. 6	Seg. 7	Seg. 8	Seg. 9
#1 6:30 - 6:45	13.6	14.2	10.9	13.1	12.4	12.6	10.9	12.4	11.7
#2 6:45 - 7:00	16.1	16.8	12.8	15.5	14.5	14.9	12.7	14.9	13.9
#3 7:00 - 7:15	16.4	17.2	12.4	16.9	15.7	16.1	14.0	16.6	15.5
#4 7:15 - 7:30	21.3	22.4	16.9	22.7	20.9	21.5	18.6	22.4	20.6
#5 7:30 - 7:45	23.9	25.0	18.5	24.4	22.5	23.2	19.9	24.4	22.4
#6 7:45 - 8:00	26.6	27.4	19.7	25.6	23.7	24.3	20.6	25.3	23.4
#7 8:00 - 8:15	22.3	23.6	16.8	21.9	20.2	20.8	18.1	22.0	20.2
#8 8:15 - 8:30	20.4	21.4	16.4	21.3	19.6	20.2	18.0	21.7	20.0
#9 8:30 - 8:45	20.0	21.1	15.9	20.4	18.8	19.3	17.2	21.0	19.4
#10 8:45 - 9:00	18.2	19.1	14.4	18.3	17.0	17.4	15.6	19.5	18.0
#11 9:00 - 9:15	17.4	18.2	14.1	17.7	16.4	16.7	15.1	18.2	16.9
#12 9:15 - 9:30	17.0	17.6	14.0	17.5	16.3	16.6	15.0	18.4	17.0

DocuSign Envelope ID: 5C03745C-4B01-4834-A65D-B77F558A4F46

LOS

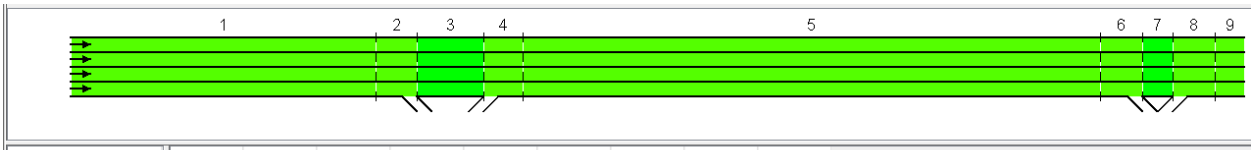

Analysis Period	Seg. 1	Seg. 2	Seg. 3	Seg. 4	Seg. 5	Seg. 6	Seg. 7	Seg. 8	Seg. 9
#1 6:30 - 6:45	B	B	A	B	B	B	A	B	B
#2 6:45 - 7:00	B	C	B	B	B	B	B	B	B
#3 7:00 - 7:15	B	C	B	B	B	B	B	B	B
#4 7:15 - 7:30	C	D	B	C	C	C	C	C	C
#5 7:30 - 7:45	C	D	C	C	C	C	C	C	C
#6 7:45 - 8:00	D	D	C	C	C	C	C	C	C
#7 8:00 - 8:15	C	D	B	C	C	C	C	C	C
#8 8:15 - 8:30	C	C	B	C	C	C	B	C	C
#9 8:30 - 8:45	C	C	B	C	C	C	B	C	C
#10 8:45 - 9:00	C	C	B	B	B	B	B	B	C
#11 9:00 - 9:15	B	C	B	B	B	B	B	B	B
#12 9:15 - 9:30	B	C	B	B	B	B	B	B	B

2045 No-Build PM Peak Density and Level of Service - Eastbound

Density (pc/mi/ln)

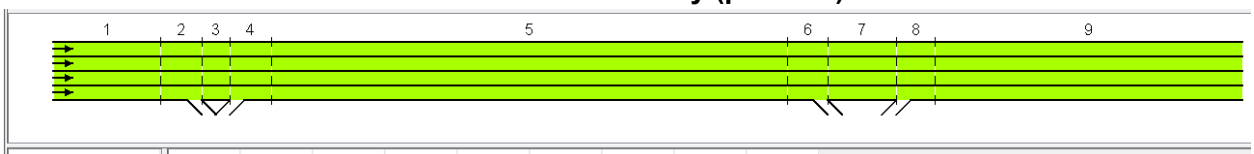

Analysis Period	Seg. 1	Seg. 2	Seg. 3	Seg. 4	Seg. 5	Seg. 6	Seg. 7	Seg. 8	Seg. 9
#1 15:30 - 15:45	23.0	23.6	20.2	25.4	23.5	24.0	19.2	25.5	23.5
#2 15:45 - 16:00	29.5	29.5	24.9	29.7	28.3	28.3	21.5	28.8	27.0
#3 16:00 - 16:15	27.6	27.6	23.2	28.3	26.6	26.7	21.2	27.8	26.0
#4 16:15 - 16:30	29.1	29.1	24.4	28.6	26.9	27.1	20.3	27.0	25.1
#5 16:30 - 16:45	26.2	26.5	22.5	27.3	25.4	25.9	19.3	25.0	23.0
#6 16:45 - 17:00	26.2	26.4	22.6	27.5	25.7	25.9	20.5	28.1	26.2
#7 17:00 - 17:15	28.4	28.4	23.8	29.4	27.9	27.9	22.6	30.1	28.5
#8 17:15 - 17:30	33.1	33.1	28.4	33.4	33.2	33.2	25.1	33.3	32.7
#9 17:30 - 17:45	26.9	27.0	23.5	28.3	26.6	26.7	21.1	28.0	26.1
#10 17:45 - 18:00	25.4	25.9	21.5	25.4	23.4	24.1	18.3	24.3	22.3
#11 18:00 - 18:15	20.4	21.1	18.1	21.5	19.8	20.3	16.7	21.9	20.1
#12 18:15 - 18:30	20.9	21.6	18.4	21.5	19.8	20.3	16.2	21.0	19.3

LOS

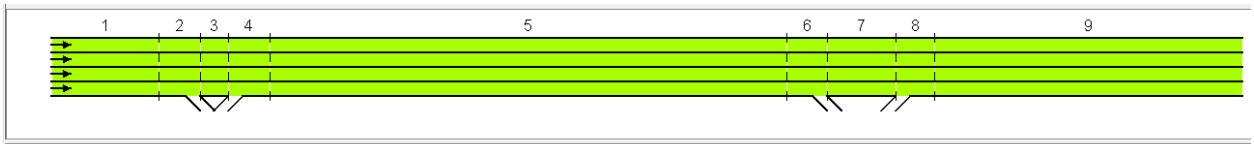

Analysis Period	Seg. 1	Seg. 2	Seg. 3	Seg. 4	Seg. 5	Seg. 6	Seg. 7	Seg. 8	Seg. 9
#1 15:30 - 15:45	C	C	C	C	C	C	C	C	C
#2 15:45 - 16:00	D	D	C	C	D	C	C	C	D
#3 16:00 - 16:15	D	D	C	C	D	C	C	C	C
#4 16:15 - 16:30	D	D	C	C	D	C	C	C	C
#5 16:30 - 16:45	D	C	C	C	C	C	C	C	C
#6 16:45 - 17:00	D	C	C	C	C	C	C	C	D
#7 17:00 - 17:15	D	D	C	C	D	C	C	D	D
#8 17:15 - 17:30	D	D	D	D	D	C	C	D	D
#9 17:30 - 17:45	D	D	C	C	D	C	C	C	D
#10 17:45 - 18:00	C	C	C	C	C	C	C	C	C
#11 18:00 - 18:15	C	C	C	C	C	B	B	C	C
#12 18:15 - 18:30	C	C	C	B	C	B	B	C	C

DocuSign Envelope ID: 5C03745C-4B01-4834-A65D-B77F558A4F46

2045 No-Build PM Peak Density and Level of Service - Westbound

Density (pc/mi/ln)

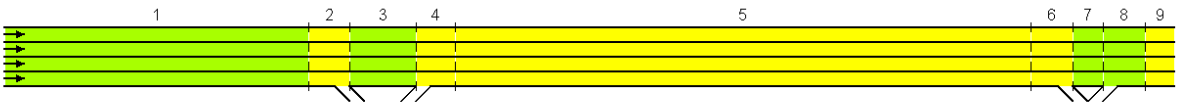

Analysis Period	Seg. 1	Seg. 2	Seg. 3	Seg. 4	Seg. 5	Seg. 6	Seg. 7	Seg. 8	Seg. 9
#1 15:30 - 15:45	25.6	26.1	21.3	29.5	27.8	27.8	24.8	30.7	29.4
#2 15:45 - 16:00	26.4	26.8	21.8	29.1	27.4	27.4	24.3	29.7	28.2
#3 16:00 - 16:15	24.1	24.8	20.1	27.6	25.7	25.8	23.4	29.4	27.8
#4 16:15 - 16:30	26.1	26.7	20.8	26.9	25.0	25.3	22.6	29.0	27.3
#5 16:30 - 16:45	22.2	23.1	18.5	25.8	23.7	24.2	21.7	26.3	24.4
#6 16:45 - 17:00	23.5	24.2	19.8	25.4	23.5	24.0	20.9	26.1	24.2
#7 17:00 - 17:15	24.0	24.8	19.7	28.0	26.0	26.3	22.6	28.6	26.9
#8 17:15 - 17:30	23.8	24.7	19.4	27.3	25.3	25.7	22.1	28.2	26.5
#9 17:30 - 17:45	22.2	23.1	18.5	24.9	23.0	23.5	20.7	26.5	24.6
#10 17:45 - 18:00	21.4	22.3	18.0	25.2	23.2	23.6	21.5	26.5	24.7
#11 18:00 - 18:15	19.9	20.9	16.2	22.6	20.7	21.3	19.1	23.8	21.9
#12 18:15 - 18:30	19.7	20.5	17.0	21.3	19.6	20.1	18.2	22.1	20.4

LOS

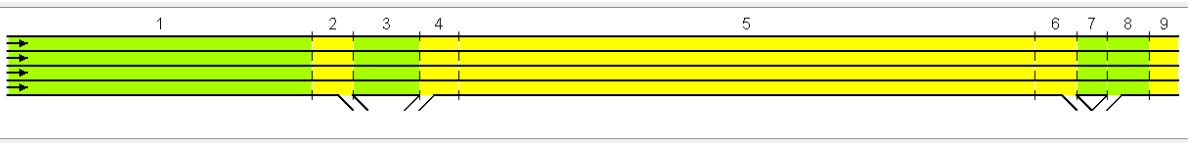

Analysis Period	Seg. 1	Seg. 2	Seg. 3	Seg. 4	Seg. 5	Seg. 6	Seg. 7	Seg. 8	Seg. 9
#1 15:30 - 15:45	C	D	C	D	D	D	C	C	D
#2 15:45 - 16:00	D	D	C	C	D	D	C	C	D
#3 16:00 - 16:15	C	D	C	C	C	C	C	C	D
#4 16:15 - 16:30	D	D	C	C	C	C	C	C	D
#5 16:30 - 16:45	C	D	C	C	C	C	C	C	C
#6 16:45 - 17:00	C	D	C	C	C	C	C	C	C
#7 17:00 - 17:15	C	D	C	D	D	C	C	C	D
#8 17:15 - 17:30	C	D	C	C	C	C	C	C	D
#9 17:30 - 17:45	C	D	C	C	C	C	C	C	C
#10 17:45 - 18:00	C	C	C	C	C	C	C	C	C
#11 18:00 - 18:15	C	C	B	C	C	C	C	C	C
#12 18:15 - 18:30	C	C	B	C	C	C	C	C	C

DocuSign Envelope ID: 5C03745C-4B01-4834-A65D-B77F558A4F46

2045 Build

2045 Build AM Peak Density and Level of Service - Eastbound

Density (pc/mi/ln)

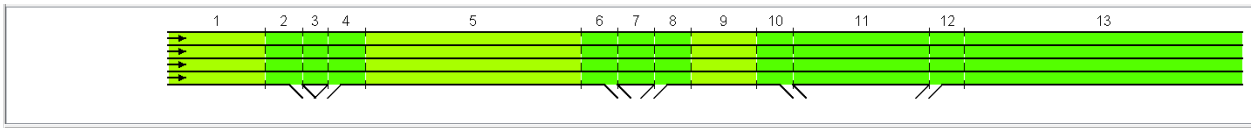

Analysis Period	Seg. 1	Seg. 2	Seg. 3	Seg. 4	Seg. 5	Seg. 6	Seg. 7	Seg. 8	Seg. 9	Seg. 10	Seg. 11	Seg. 12	Seg. 13
#1 6:30 - 6:45	19.2	19.7	18.0	20.5	18.9	19.4	17.6	19.7	18.2	18.6	15.2	17.7	16.4
#2 6:45 - 7:00	17.7	18.1	16.4	19.0	17.7	18.1	15.9	18.0	16.7	17.4	11.5	13.6	12.8
#3 7:00 - 7:15	17.2	17.6	16.1	19.3	17.9	18.3	16.6	18.9	17.6	17.9	14.0	16.4	15.3
#4 7:15 - 7:30	23.3	23.6	22.1	26.0	24.1	24.4	22.1	25.2	23.3	24.2	16.9	20.3	18.8
#5 7:30 - 7:45	28.3	28.3	26.2	30.3	29.0	29.0	26.0	29.6	28.1	28.2	20.3	25.5	23.6
#6 7:45 - 8:00	27.6	27.6	25.1	29.4	27.9	27.9	24.6	28.2	26.4	27.2	18.0	22.4	20.6
#7 8:00 - 8:15	22.0	22.6	20.3	24.5	22.6	23.2	20.4	23.8	21.9	22.7	16.4	20.1	18.6
#8 8:15 - 8:30	22.6	23.1	20.4	24.0	22.1	22.7	19.9	23.0	21.1	21.8	16.7	20.6	19.0
#9 8:30 - 8:45	21.8	22.3	20.2	23.6	21.7	22.3	19.9	22.9	21.1	21.8	16.7	20.7	19.1
#10 8:45 - 9:00	22.3	22.8	20.7	24.6	22.7	23.2	20.7	24.0	22.1	22.8	17.1	21.2	19.5
#11 9:00 - 9:15	18.7	19.1	17.5	20.1	18.6	19.0	17.3	19.8	18.3	18.7	15.3	19.0	17.6
#12 9:15 - 9:30	18.9	19.3	17.3	20.3	18.8	19.3	17.2	19.8	18.3	18.7	15.0	18.6	17.3

LOS

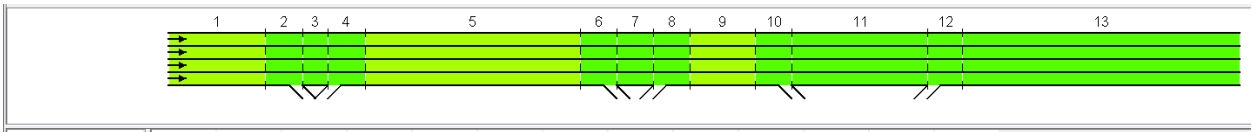

Analysis Period	Seg. 1	Seg. 2	Seg. 3	Seg. 4	Seg. 5	Seg. 6	Seg. 7	Seg. 8	Seg. 9	Seg. 10	Seg. 11	Seg. 12	Seg. 13
#1 6:30 - 6:45	C	B	B	B	C	B	B	B	C	B	B	B	B
#2 6:45 - 7:00	B	B	B	B	B	B	B	B	B	B	B	B	B
#3 7:00 - 7:15	B	B	B	B	B	B	B	B	B	B	B	B	B
#4 7:15 - 7:30	C	C	C	C	C	C	C	C	C	C	B	B	C
#5 7:30 - 7:45	D	C	D	C	D	D	D	C	D	C	C	C	C
#6 7:45 - 8:00	D	C	C	C	D	D	C	C	D	D	B	C	C
#7 8:00 - 8:15	C	C	C	C	C	C	C	C	C	C	B	B	C
#8 8:15 - 8:30	C	C	C	C	C	C	C	C	C	C	B	C	C
#9 8:30 - 8:45	C	C	C	C	C	C	C	C	C	C	B	C	C
#10 8:45 - 9:00	C	C	C	C	C	C	C	C	C	C	B	C	C
#11 9:00 - 9:15	C	B	B	B	C	B	B	B	C	B	B	B	B
#12 9:15 - 9:30	C	B	B	B	C	C	B	B	C	B	B	B	B

2045 Build AM Peak Density and Level of Service - Westbound

Density (pc/mi/ln)

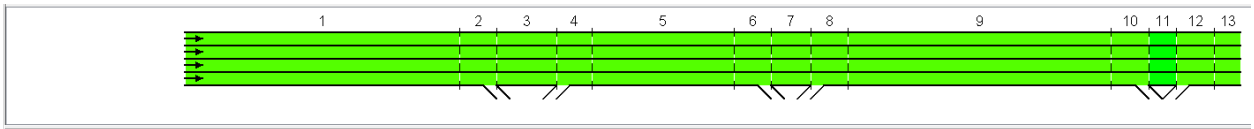

Analysis Period	Seg. 1	Seg. 2	Seg. 3	Seg. 4	Seg. 5	Seg. 6	Seg. 7	Seg. 8	Seg. 9	Seg. 10	Seg. 11	Seg. 12	Seg. 13
#1 6:30 - 6:45	13.7	14.2	11.2	13.8	12.9	13.1	11.9	13.2	12.5	12.7	10.9	12.0	11.4
#2 6:45 - 7:00	16.2	16.9	13.2	16.3	15.2	15.5	13.9	15.7	14.7	15.1	12.8	14.3	13.4
#3 7:00 - 7:15	16.5	17.3	12.9	17.9	16.6	17.0	15.2	17.7	16.4	16.9	14.7	16.6	15.5
#4 7:15 - 7:30	21.5	22.5	17.5	24.0	22.0	22.6	20.3	23.8	21.9	22.6	19.5	22.3	20.6
#5 7:30 - 7:45	24.2	25.1	19.1	25.8	23.8	24.3	21.7	25.5	23.6	24.2	20.7	24.0	22.1
#6 7:45 - 8:00	26.9	27.5	20.5	27.1	25.2	25.5	22.6	26.5	24.6	25.1	21.2	24.6	22.7
#7 8:00 - 8:15	22.5	23.7	17.5	23.2	21.3	21.9	19.5	22.8	21.0	21.6	18.8	21.6	19.9
#8 8:15 - 8:30	20.5	21.5	16.9	22.4	20.6	21.1	19.2	22.4	20.6	21.2	18.8	21.6	19.9
#9 8:30 - 8:45	20.2	21.2	16.5	21.4	19.7	20.2	18.4	21.4	19.7	20.3	18.1	20.8	19.2
#10 8:45 - 9:00	18.4	19.2	14.9	19.3	17.8	18.2	16.6	19.4	18.0	18.4	16.6	19.3	17.9
#11 9:00 - 9:15	17.6	18.3	14.6	18.5	17.2	17.5	16.1	18.5	17.2	17.5	15.8	18.0	16.7
#12 9:15 - 9:30	17.1	17.7	14.5	18.3	17.0	17.3	16.0	18.5	17.1	17.5	15.8	18.2	16.9

DocuSign Envelope ID: 5C03745C-4B01-4834-A65D-B77F558A4F46

LOS

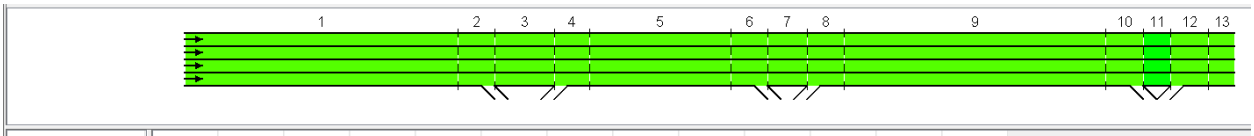

Analysis Period	Seg. 1	Seg. 2	Seg. 3	Seg. 4	Seg. 5	Seg. 6	Seg. 7	Seg. 8	Seg. 9	Seg. 10	Seg. 11	Seg. 12	Seg. 13
#1 6:30 - 6:45	B	B	B	B	B	B	B	B	B	B	A	B	B
#2 6:45 - 7:00	B	C	B	B	B	B	B	B	B	B	B	B	B
#3 7:00 - 7:15	B	C	B	B	B	B	B	B	B	B	B	B	B
#4 7:15 - 7:30	C	C	B	C	C	C	C	C	C	C	C	C	C
#5 7:30 - 7:45	C	D	C	C	C	C	C	C	C	C	C	C	C
#6 7:45 - 8:00	D	D	C	C	C	C	C	C	C	C	C	C	C
#7 8:00 - 8:15	C	D	B	C	C	C	C	C	C	C	C	B	C
#8 8:15 - 8:30	C	C	B	C	C	C	C	C	C	C	C	B	C
#9 8:30 - 8:45	C	C	B	C	C	C	C	B	C	C	C	B	C
#10 8:45 - 9:00	C	C	B	B	B	B	B	B	B	B	B	B	B
#11 9:00 - 9:15	B	C	B	B	B	B	B	B	B	B	B	B	B
#12 9:15 - 9:30	B	C	B	B	B	B	B	B	B	B	B	B	B

2045 Build PM Peak Density and Level of Service - Eastbound

Density (pc/mi/ln)

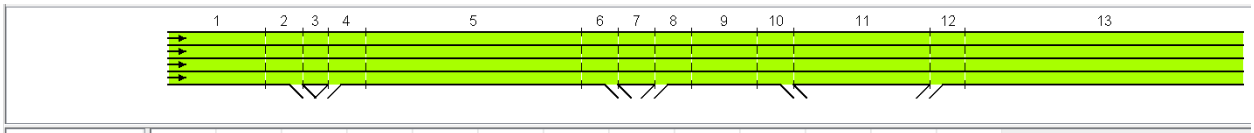

Analysis Period	Seg. 1	Seg. 2	Seg. 3	Seg. 4	Seg. 5	Seg. 6	Seg. 7	Seg. 8	Seg. 9	Seg. 10	Seg. 11	Seg. 12	Seg. 13
#1 15:30 - 15:45	21.6	22.1	20.3	23.6	21.7	22.2	20.4	23.4	21.6	22.0	18.9	22.6	20.8
#2 15:45 - 16:00	19.8	20.3	18.5	22.0	20.3	20.8	18.8	21.7	20.0	20.6	15.7	18.9	17.5
#3 16:00 - 16:15	19.3	19.7	18.2	22.5	20.6	21.1	19.5	22.9	21.0	21.5	18.0	21.7	20.0
#4 16:15 - 16:30	26.9	26.9	25.5	30.1	28.7	28.7	26.6	30.3	29.0	29.0	22.3	27.5	25.7
#5 16:30 - 16:45	33.9	33.9	31.2	36.3	36.3	36.3	32.7	37.4	37.4	37.4	27.7	35.3	35.3
#6 16:45 - 17:00	32.9	32.9	29.7	34.8	34.8	34.8	30.8	34.9	34.9	34.9	24.8	31.5	30.5
#7 17:00 - 17:15	25.2	25.4	23.3	28.6	26.9	26.9	24.7	29.0	27.4	27.4	21.8	27.6	25.7
#8 17:15 - 17:30	25.9	26.0	23.5	27.9	26.1	26.1	23.9	27.9	26.1	26.2	21.7	27.7	25.8
#9 17:30 - 17:45	24.9	25.1	23.1	27.3	25.5	25.6	23.6	27.6	25.8	26.0	21.4	27.7	25.8
#10 17:45 - 18:00	25.6	25.7	23.7	28.6	26.9	26.9	24.8	29.1	27.5	27.5	22.4	28.5	26.8
#11 18:00 - 18:15	21.4	21.9	20.2	23.7	21.8	22.3	20.6	24.2	22.3	22.7	19.6	25.3	23.3
#12 18:15 - 18:30	21.2	21.7	19.6	23.6	21.7	22.2	20.2	23.9	22.0	22.5	19.2	24.6	22.7

LOS

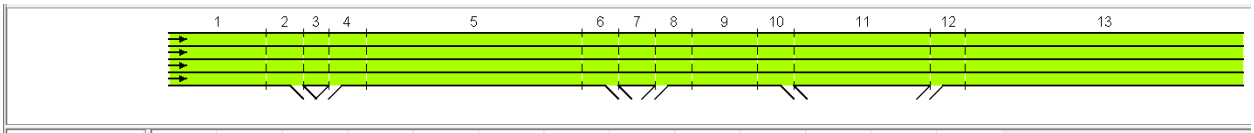

Analysis Period	Seg. 1	Seg. 2	Seg. 3	Seg. 4	Seg. 5	Seg. 6	Seg. 7	Seg. 8	Seg. 9	Seg. 10	Seg. 11	Seg. 12	Seg. 13
#1 15:30 - 15:45	C	C	C	C	C	C	C	C	C	C	C	C	C
#2 15:45 - 16:00	C	C	C	C	C	C	C	B	C	C	B	B	B
#3 16:00 - 16:15	C	B	C	C	C	C	C	C	C	C	C	C	C
#4 16:15 - 16:30	D	C	C	C	D	C	D	C	D	C	C	C	C
#5 16:30 - 16:45	D	D	D	D	E	D	D	D	E	D	D	D	E
#6 16:45 - 17:00	D	D	D	D	D	D	D	D	D	D	C	D	D
#7 17:00 - 17:15	C	C	C	C	D	C	C	C	D	C	C	C	C
#8 17:15 - 17:30	C	C	C	C	D	C	C	C	D	C	C	C	C
#9 17:30 - 17:45	C	C	C	C	C	C	C	C	C	C	C	C	C
#10 17:45 - 18:00	C	C	C	C	D	C	C	C	D	C	C	C	D
#11 18:00 - 18:15	C	C	C	C	C	C	C	C	C	C	C	C	C
#12 18:15 - 18:30	C	C	C	C	C	C	C	C	C	C	C	C	C

DocuSign Envelope ID: 5C03745C-4B01-4834-A65D-B77F558A4F46

2045 Build PM Peak Density and Level of Service - Westbound

Density (pc/mi/ln)

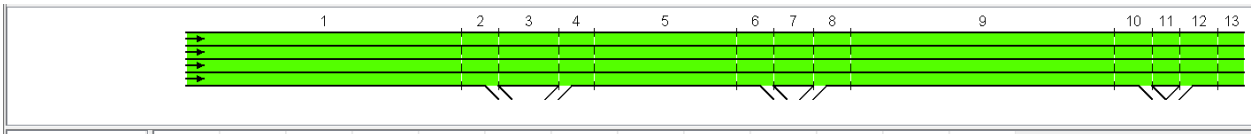

Analysis Period	Seg. 1	Seg. 2	Seg. 3	Seg. 4	Seg. 5	Seg. 6	Seg. 7	Seg. 8	Seg. 9	Seg. 10	Seg. 11	Seg. 12	Seg. 13
#1 15:30 - 15:45	13.6	14.0	11.8	15.1	14.1	14.3	13.2	15.1	14.1	14.4	12.6	14.1	13.3
#2 15:45 - 16:00	16.1	16.6	13.9	17.9	16.6	16.9	15.5	17.9	16.7	17.1	14.8	17.0	15.8
#3 16:00 - 16:15	16.4	17.0	13.7	20.5	18.8	19.3	17.7	21.1	19.5	20.0	17.8	20.5	18.9
#4 16:15 - 16:30	21.3	22.1	18.3	27.3	25.1	25.3	23.4	28.0	26.3	26.4	23.5	27.2	25.4
#5 16:30 - 16:45	24.0	24.7	20.1	29.3	27.4	27.4	25.2	30.1	28.7	28.7	25.3	29.4	27.9
#6 16:45 - 17:00	26.7	27.0	21.8	30.7	29.2	29.2	26.5	31.2	30.1	30.1	26.0	30.2	28.9
#7 17:00 - 17:15	22.3	23.2	18.6	26.3	24.3	24.6	22.5	26.9	25.1	25.3	22.6	26.5	24.6
#8 17:15 - 17:30	20.4	21.2	17.7	25.1	23.0	23.4	21.7	26.0	24.1	24.4	22.1	25.9	24.0
#9 17:30 - 17:45	20.0	20.8	17.3	24.0	22.0	22.4	20.7	24.9	23.0	23.5	21.2	25.1	23.1
#10 17:45 - 18:00	18.3	18.9	15.7	21.5	19.7	20.2	18.7	22.6	20.8	21.3	19.4	23.3	21.4
#11 18:00 - 18:15	17.4	18.0	15.2	20.4	18.8	19.2	17.9	21.2	19.5	20.0	18.2	21.3	19.6
#12 18:15 - 18:30	17.0	17.5	15.0	20.1	18.5	18.9	17.7	21.1	19.4	19.9	18.1	21.4	19.7

LOS

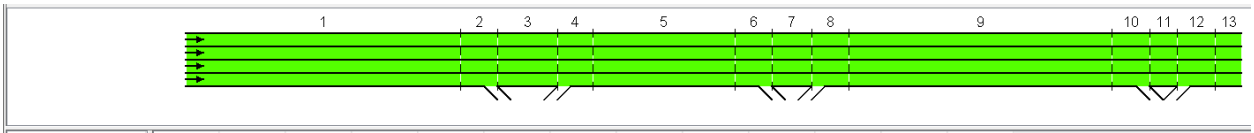

Analysis Period	Seg. 1	Seg. 2	Seg. 3	Seg. 4	Seg. 5	Seg. 6	Seg. 7	Seg. 8	Seg. 9	Seg. 10	Seg. 11	Seg. 12	Seg. 13
#1 15:30 - 15:45	B	B	B	B	B	B	B	B	B	B	B	B	B
#2 15:45 - 16:00	B	C	B	B	B	B	B	B	B	B	B	B	B
#3 16:00 - 16:15	B	C	B	C	C	B	B	C	C	C	B	B	C
#4 16:15 - 16:30	C	C	C	D	C	C	C	C	D	C	C	C	C
#5 16:30 - 16:45	C	D	C	D	D	C	C	C	D	D	C	C	D
#6 16:45 - 17:00	D	D	C	D	D	D	D	C	D	D	C	C	D
#7 17:00 - 17:15	C	D	C	C	C	C	C	C	C	C	C	C	C
#8 17:15 - 17:30	C	C	B	C	C	C	C	C	C	C	C	C	C
#9 17:30 - 17:45	C	C	B	C	C	C	C	C	C	C	C	C	C
#10 17:45 - 18:00	C	C	B	C	C	C	C	C	C	C	C	C	C
#11 18:00 - 18:15	B	C	B	C	C	B	B	B	C	C	C	B	C
#12 18:15 - 18:30	B	C	B	C	C	B	B	C	C	C	C	B	C

DocuSign Envelope ID: 5C03745C-4B01-4834-A65D-B77F558A4F46

2045 Build (Left Entrance/Exit for HE-0001 Westbound Ramps)

2045 Build (Left Entrance/Exit) AM Peak Density and Level of Service - Eastbound

This scenario has the same results as 2045 Build as there is no change in the eastbound direction.

2045 Build (Left Entrance/Exit) AM Peak Density and Level of Service - Westbound

Density (pc/mi/ln)

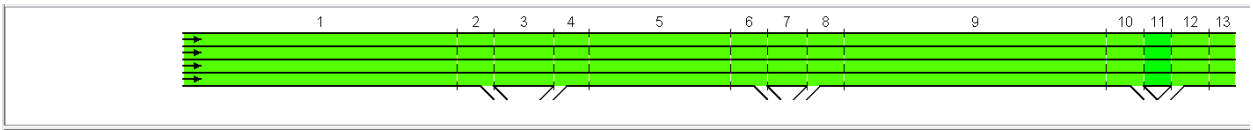

Analysis Period	Seg. 1	Seg. 2	Seg. 3	Seg. 4	Seg. 5	Seg. 6	Seg. 7	Seg. 8	Seg. 9	Seg. 10	Seg. 11	Seg. 12	Seg. 13
#1 6:30 - 6:45	13.7	14.2	11.2	13.8	12.9	13.2	11.9	13.2	12.5	12.7	10.9	12.0	11.4
#2 6:45 - 7:00	16.2	16.9	13.2	16.3	15.2	15.6	13.9	15.7	14.7	15.1	12.8	14.3	13.4
#3 7:00 - 7:15	16.5	17.3	12.9	17.9	16.6	17.1	15.2	17.7	16.4	16.9	14.7	16.6	15.5
#4 7:15 - 7:30	21.5	22.5	17.5	24.0	22.0	22.7	20.3	23.8	21.9	22.6	19.5	22.3	20.6
#5 7:30 - 7:45	24.2	25.1	19.1	25.8	23.8	24.4	21.7	25.5	23.6	24.2	20.7	24.0	22.1
#6 7:45 - 8:00	26.9	27.5	20.5	27.1	25.2	25.6	22.6	26.5	24.6	25.1	21.2	24.6	22.7
#7 8:00 - 8:15	22.5	23.7	17.5	23.2	21.3	22.0	19.5	22.8	21.0	21.6	18.8	21.6	19.9
#8 8:15 - 8:30	20.5	21.5	16.9	22.4	20.6	21.2	19.2	22.4	20.6	21.2	18.8	21.6	19.9
#9 8:30 - 8:45	20.2	21.2	16.5	21.4	19.7	20.4	18.4	21.4	19.7	20.3	18.1	20.8	19.2
#10 8:45 - 9:00	18.4	19.2	14.9	19.3	17.8	18.3	16.6	19.4	18.0	18.4	16.6	19.3	17.9
#11 9:00 - 9:15	17.6	18.3	14.6	18.5	17.2	17.6	16.1	18.5	17.2	17.5	15.8	18.0	16.7
#12 9:15 - 9:30	17.1	17.7	14.5	18.3	17.0	17.4	16.0	18.3	17.0	17.4	15.7	18.0	16.7

LOS

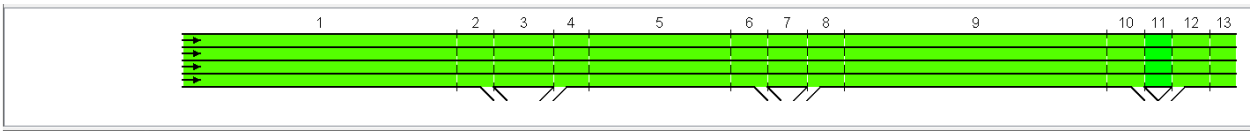

Analysis Period	Seg. 1	Seg. 2	Seg. 3	Seg. 4	Seg. 5	Seg. 6	Seg. 7	Seg. 8	Seg. 9	Seg. 10	Seg. 11	Seg. 12	Seg. 13
#1 6:30 - 6:45	B	B	B	B	B	B	B	B	B	B	A	B	B
#2 6:45 - 7:00	B	C	B	B	B	B	B	B	B	B	B	B	B
#3 7:00 - 7:15	B	C	B	B	B	B	B	B	B	B	B	B	B
#4 7:15 - 7:30	C	C	B	C	C	C	C	C	C	C	C	C	C
#5 7:30 - 7:45	C	D	C	C	C	C	C	C	C	C	C	C	C
#6 7:45 - 8:00	D	D	C	C	C	D	C	C	C	C	C	C	C
#7 8:00 - 8:15	C	D	B	C	C	C	C	C	C	C	C	B	C
#8 8:15 - 8:30	C	C	B	C	C	C	C	C	C	C	C	B	C
#9 8:30 - 8:45	C	C	B	C	C	C	C	B	C	C	C	B	C
#10 8:45 - 9:00	C	C	B	B	B	C	B	B	B	B	B	B	B
#11 9:00 - 9:15	B	C	B	B	B	B	B	B	B	B	B	B	B
#12 9:15 - 9:30	B	C	B	B	B	B	B	B	B	B	B	B	B

2045 Build (Left Entrance/Exit) PM Peak Density and Level of Service - Eastbound

This scenario has the same results as 2045 Build as there is no change in the eastbound direction.

DocuSign Envelope ID: 5C03745C-4B01-4834-A65D-B77F558A4F46

2045 Build (Left Entrance/Exit) PM Peak Density and Level of Service - Westbound

Density (pc/mi/ln)

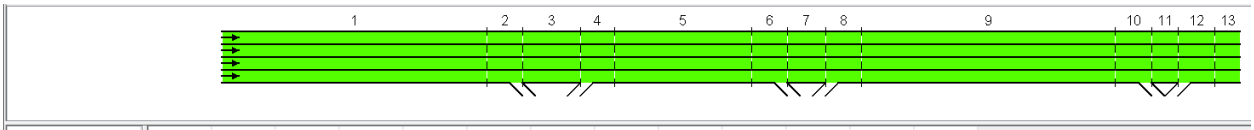

Analysis Period	Seg. 1	Seg. 2	Seg. 3	Seg. 4	Seg. 5	Seg. 6	Seg. 7	Seg. 8	Seg. 9	Seg. 10	Seg. 11	Seg. 12	Seg. 13
#1 15:30 - 15:45	13.6	14.0	11.8	15.1	14.1	14.4	13.2	15.1	14.1	14.4	12.6	14.1	13.3
#2 15:45 - 16:00	16.1	16.6	13.9	17.9	16.6	17.0	15.5	17.9	16.7	17.1	14.8	17.0	15.8
#3 16:00 - 16:15	16.4	17.0	13.7	20.5	18.8	19.4	17.7	21.1	19.5	20.0	17.8	20.5	18.9
#4 16:15 - 16:30	21.3	22.1	18.3	27.3	25.1	25.4	23.4	28.0	26.3	26.4	23.5	27.2	25.4
#5 16:30 - 16:45	24.0	24.7	20.1	29.3	27.4	27.4	25.2	30.1	28.7	28.7	25.3	29.4	27.9
#6 16:45 - 17:00	26.7	27.0	21.8	30.7	29.2	29.2	26.5	31.2	30.1	30.1	26.0	30.2	28.9
#7 17:00 - 17:15	22.3	23.2	18.6	26.3	24.3	24.7	22.5	26.9	25.1	25.3	22.6	26.5	24.6
#8 17:15 - 17:30	20.4	21.2	17.7	25.1	23.0	23.5	21.7	26.0	24.1	24.4	22.1	25.9	24.0
#9 17:30 - 17:45	20.0	20.8	17.3	24.0	22.0	22.6	20.7	24.9	23.0	23.5	21.2	25.1	23.1
#10 17:45 - 18:00	18.3	18.9	15.7	21.5	19.7	20.3	18.7	22.6	20.8	21.3	19.4	23.3	21.4
#11 18:00 - 18:15	17.4	18.0	15.2	20.4	18.8	19.3	17.9	21.2	19.5	20.0	18.2	21.3	19.6
#12 18:15 - 18:30	17.0	17.5	15.0	20.1	18.5	19.0	17.7	21.1	19.4	19.9	18.1	21.4	19.7

LOS

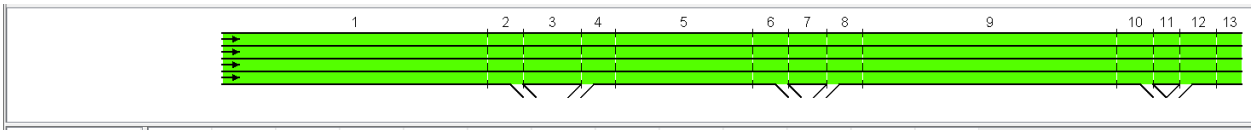

Analysis Period	Seg. 1	Seg. 2	Seg. 3	Seg. 4	Seg. 5	Seg. 6	Seg. 7	Seg. 8	Seg. 9	Seg. 10	Seg. 11	Seg. 12	Seg. 13
#1 15:30 - 15:45	B	B	B	B	B	B	B	B	B	B	B	B	B
#2 15:45 - 16:00	B	C	B	B	B	B	B	B	B	B	B	B	B
#3 16:00 - 16:15	B	C	B	C	C	C	B	C	C	C	B	B	C
#4 16:15 - 16:30	C	C	C	D	C	C	C	C	D	C	C	C	C
#5 16:30 - 16:45	C	D	C	D	D	D	C	C	D	D	C	C	D
#6 16:45 - 17:00	D	D	C	D	D	D	D	C	D	D	C	C	D
#7 17:00 - 17:15	C	D	C	C	C	C	C	C	C	C	C	C	C
#8 17:15 - 17:30	C	C	B	C	C	C	C	C	C	C	C	C	C
#9 17:30 - 17:45	C	C	B	C	C	C	C	C	C	C	C	C	C
#10 17:45 - 18:00	C	C	B	C	C	C	C	C	C	C	C	C	C
#11 18:00 - 18:15	B	C	B	C	C	C	B	B	C	C	C	B	C
#12 18:15 - 18:30	B	C	B	C	C	C	B	C	C	C	C	B	C

DocuSign Envelope ID: 5C03745C-4B01-4834-A65D-B77F558A4F46

Appendix K – SIDRA

DocuSign Envelope ID: 5C03745C-4B01-4834-A65D-B77F558A4F46

SITE LAYOUT

Site: 18 [18 - AM - Blue Ridge Parkway Access at Pratt & Whitney Access & Biltmore Park West Access]

AM - Blue Ridge Parkway Access at Pratt & Whitney Access & Biltmore Park West Access
Site Category: (None)
Roundabout

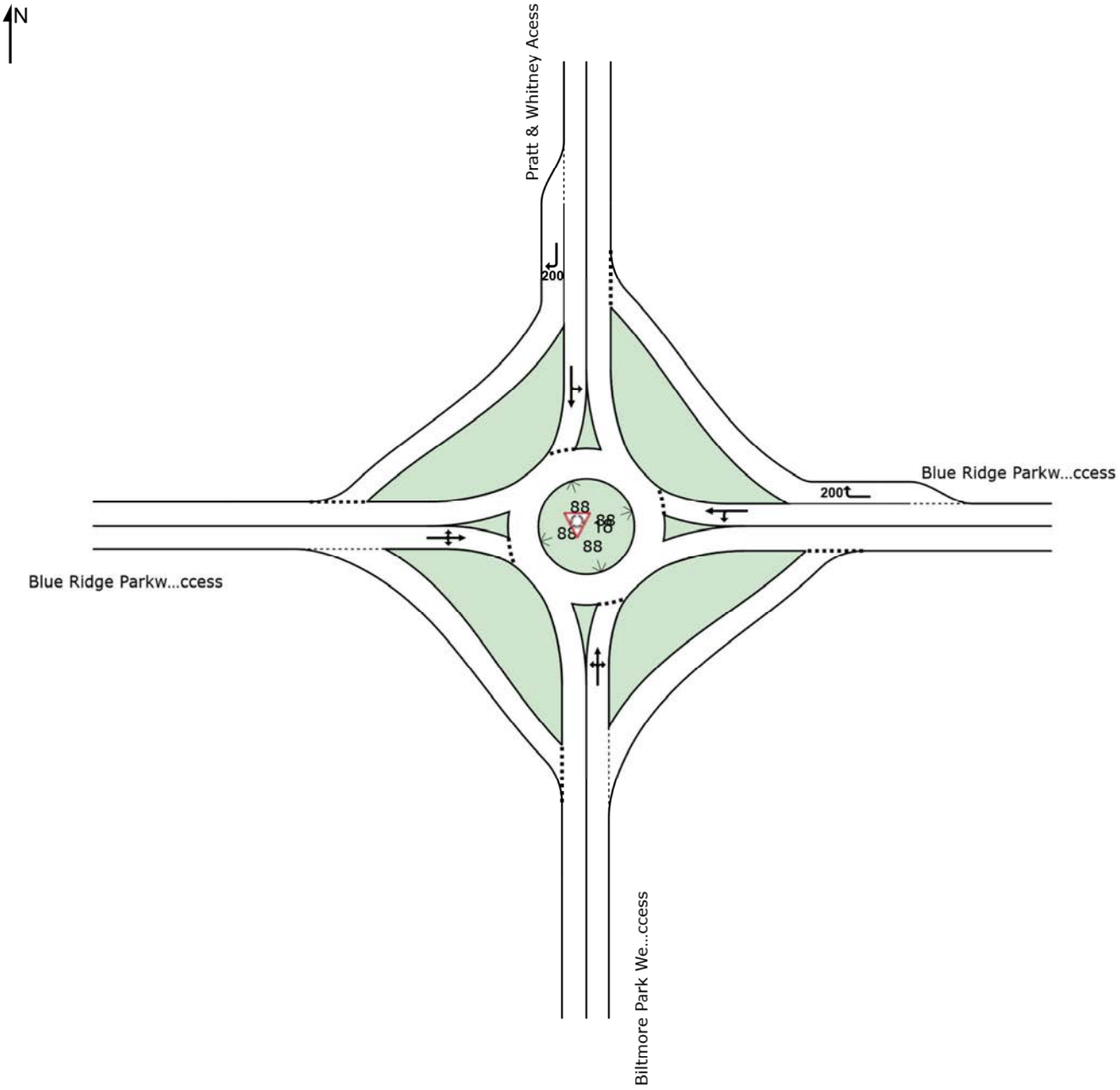

DocuSign Envelope ID: 5C03745C-4B01-4834-A65D-B77F558A4F46

MOVEMENT SUMMARY

Site: 18 [18 - AM - Blue Ridge Parkway Access at Pratt & Whitney Access & Biltmore Park West Access]

AM - Blue Ridge Parkway Access at Pratt & Whitney Access & Biltmore Park West Access
Site Category: (None)
Roundabout

Movement Performance - Vehicles

Mov ID	Turn	Demand Flows Total veh/h	HV %	Deg. Satn v/c	Average Delay sec	Level of Service	95% Back of Queue Vehicles veh	Distance ft	Prop. Queued	Effective Stop Rate	Aver. No. Cycles	Average Speed mph
South: Biltmore Park West Access												
3	L2	73	3.0	0.425	12.3	LOS B	2.3	59.4	0.71	0.81	0.92	26.4
8	T1	60	3.0	0.425	12.3	LOS B	2.3	59.4	0.71	0.81	0.92	22.4
18	R2	147	3.0	0.425	10.9	LOS B	2.3	59.4	0.71	0.81	0.92	26.0
Approach		280	3.0	0.425	11.6	LOS B	2.3	59.4	0.71	0.81	0.92	25.2
East: Blue Ridge Parkway Access												
1	L2	243	5.0	0.579	11.7	LOS B	5.2	133.9	0.67	0.74	0.99	27.0
6	T1	309	5.0	0.579	11.7	LOS B	5.2	133.9	0.67	0.74	0.99	32.2
16	R2	489	5.0	0.478	9.1	LOS A	2.6	67.3	0.56	0.46	0.56	27.2
Approach		1041	5.0	0.579	10.5	LOS B	5.2	133.9	0.62	0.61	0.79	28.5
North: Pratt & Whitney Acess												
7	L2	206	4.0	0.328	8.7	LOS A	1.4	35.5	0.63	0.63	0.64	26.3
4	T1	41	4.0	0.328	8.7	LOS A	1.4	35.5	0.63	0.63	0.64	22.5
14	R2	90	4.0	0.095	4.7	LOS A	0.4	9.3	0.44	0.35	0.44	28.5
Approach		337	4.0	0.328	7.7	LOS A	1.4	35.5	0.58	0.56	0.58	26.3
West: Blue Ridge Parkway Access												
5	L2	234	5.0	0.877	31.5	LOS D	19.1	497.7	0.98	1.55	2.64	22.0
2	T1	341	5.0	0.877	31.5	LOS D	19.1	497.7	0.98	1.55	2.64	25.3
12	R2	134	5.0	0.877	30.6	LOS D	19.1	497.7	0.98	1.55	2.64	21.3
Approach		710	5.0	0.877	31.4	LOS D	19.1	497.7	0.98	1.55	2.64	23.3
All Vehicles		2368	4.6	0.877	16.5	LOS C	19.1	497.7	0.73	0.91	1.33	26.1

Site Level of Service (LOS) Method: Delay & v/c (HCM 6). Site LOS Method is specified in the Parameter Settings dialog (Site tab).
Roundabout LOS Method: Same as Sign Control.
Vehicle movement LOS values are based on average delay and v/c ratio (degree of saturation) per movement.
LOS F will result if v/c > 1 irrespective of movement delay value (does not apply for approaches and intersection).
Intersection and Approach LOS values are based on average delay for all movements (v/c not used as specified in HCM 6).
Roundabout Capacity Model: US HCM 6.
HCM Delay Formula option is used. Control Delay does not include Geometric Delay since Exclude Geometric Delay option applies.
Gap-Acceptance Capacity: Traditional M1.
HV (%) values are calculated for All Movement Classes of All Heavy Vehicle Model Designation.

DocuSign Envelope ID: 5C03745C-4B01-4834-A65D-B77F558A4F46

MOVEMENT SUMMARY

Site: 18 [18 - PM - Blue Ridge Parkway Access at Pratt & Whitney Access & Biltmore Park West Access]

PM - Blue Ridge Parkway Access at Pratt & Whitney Access & Biltmore Park West Access
Site Category: (None)
Roundabout

Movement Performance - Vehicles

Mov ID	Turn	Demand Flows Total veh/h	HV %	Deg. Satn v/c	Average Delay sec	Level of Service	95% Back of Queue Vehicles veh	Distance ft	Prop. Queued	Effective Stop Rate	Aver. No. Cycles	Average Speed mph
South: Biltmore Park West Access												
3	L2	133	3.0	0.790	31.6	LOS D	7.8	200.9	0.90	1.46	2.14	21.4
8	T1	44	3.0	0.790	31.6	LOS D	7.8	200.9	0.90	1.46	2.14	18.7
18	R2	251	3.0	0.790	30.8	LOS D	7.8	200.9	0.90	1.46	2.14	21.2
Approach		429	3.0	0.790	31.1	LOS D	7.8	200.9	0.90	1.46	2.14	21.0
East: Blue Ridge Parkway Access												
1	L2	161	5.0	0.589	11.3	LOS B	5.4	140.9	0.63	0.62	0.85	27.4
6	T1	447	5.0	0.589	11.3	LOS B	5.4	140.9	0.63	0.62	0.85	32.8
16	R2	287	5.0	0.245	5.3	LOS A	1.1	28.8	0.32	0.20	0.32	28.6
Approach		894	5.0	0.589	9.4	LOS A	5.4	140.9	0.53	0.49	0.68	30.3
North: Pratt & Whitney Acess												
7	L2	438	4.0	0.714	21.1	LOS C	6.6	169.3	0.84	1.27	1.74	23.0
4	T1	43	4.0	0.714	21.1	LOS C	6.6	169.3	0.84	1.27	1.74	20.0
14	R2	203	4.0	0.259	7.5	LOS A	1.0	26.9	0.59	0.58	0.59	27.5
Approach		684	4.0	0.714	17.0	LOS C	6.6	169.3	0.76	1.06	1.40	23.9
West: Blue Ridge Parkway Access												
5	L2	109	5.0	0.778	24.9	LOS C	9.8	255.5	0.84	1.17	1.91	23.7
2	T1	363	5.0	0.778	24.9	LOS C	9.8	255.5	0.84	1.17	1.91	27.6
12	R2	70	5.0	0.778	22.9	LOS C	9.8	255.5	0.84	1.17	1.91	22.8
Approach		542	5.0	0.778	24.7	LOS C	9.8	255.5	0.84	1.17	1.91	26.0
All Vehicles		2550	4.4	0.790	18.3	LOS C	9.8	255.5	0.72	0.95	1.38	25.6

Site Level of Service (LOS) Method: Delay & v/c (HCM 6). Site LOS Method is specified in the Parameter Settings dialog (Site tab).
Roundabout LOS Method: Same as Sign Control.
Vehicle movement LOS values are based on average delay and v/c ratio (degree of saturation) per movement.
LOS F will result if v/c > 1 irrespective of movement delay value (does not apply for approaches and intersection).
Intersection and Approach LOS values are based on average delay for all movements (v/c not used as specified in HCM 6).
Roundabout Capacity Model: US HCM 6.
HCM Delay Formula option is used. Control Delay does not include Geometric Delay since Exclude Geometric Delay option applies.
Gap-Acceptance Capacity: Traditional M1.
HV (%) values are calculated for All Movement Classes of All Heavy Vehicle Model Designation.

DocuSign Envelope ID: 5C03745C-4B01-4834-A65D-B77F558A4F46

Appendix L – 2021 Existing Synchro Results

Note that the report describes the directions of I-26 as they are signed (eastbound and westbound) while the Synchro files use ordinal direction of the ramps in the description. For clarification, southeast-bound ramps enter or exit from eastbound I-26 while northwest-bound ramps enter or exit from I-26 westbound.

DocuSign Envelope ID: 5C03745C-4B01-4834-A65D-B77F558A4F46

2021 Existing AM

DocuSign Envelope ID: 5C03745C-4B01-4834-A65D-B77F558A4F46

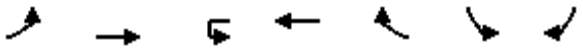

Lane Group	EBL	EBT	WBU	WBT	WBR	SBL	SBR
Lane Configurations							
Traffic Volume (vph)	49	947	0	1041	71	91	69
Future Volume (vph)	49	947	0	1041	71	91	69
Ideal Flow (vphpl)	1900	1900	1900	1900	1900	1900	1900
Storage Length (ft)	150		150		175	0	175
Storage Lanes	1		1		1	1	1
Taper Length (ft)	25		25			25	
Lane Util. Factor	1.00	0.95	1.00	0.95	1.00	1.00	1.00
Frt					0.850		0.850
Flt Protected	0.950					0.950	
Satd. Flow (prot)	1703	3406	1792	3406	1524	1703	1524
Flt Permitted	0.213					0.950	
Satd. Flow (perm)	382	3406	1792	3406	1524	1703	1524
Right Turn on Red					No		No
Satd. Flow (RTOR)							
Link Speed (mph)		45		45		25	
Link Distance (ft)		1606		558		1108	
Travel Time (s)		24.3		8.5		30.2	
Peak Hour Factor	0.90	0.90	0.90	0.90	0.90	0.90	0.90
Heavy Vehicles (%)	6%	6%	6%	6%	6%	6%	6%
Adj. Flow (vph)	54	1052	0	1157	79	101	77
Shared Lane Traffic (%)							
Lane Group Flow (vph)	54	1052	0	1157	79	101	77
Enter Blocked Intersection	No	No	No	No	No	No	No
Lane Alignment	Left	Left	R NA	Left	Right	Left	Right
Median Width(ft)		12		12		12	
Link Offset(ft)		0		0		0	
Crosswalk Width(ft)		16		16		16	
Two way Left Turn Lane							
Headway Factor	1.00	1.00	1.00	1.00	1.00	1.00	1.00
Turning Speed (mph)	15		9		9	15	9
Number of Detectors	1	2	1	2	1	1	1
Detector Template	Left	Thru	Left	Thru	Right	Left	Right
Leading Detector (ft)	20	100	20	100	20	20	20
Trailing Detector (ft)	0	0	0	0	0	0	0
Detector 1 Position(ft)	0	0	0	0	0	0	0
Detector 1 Size(ft)	20	6	20	6	20	20	20
Detector 1 Type	Cl+Ex	Cl+Ex	Cl+Ex	Cl+Ex	Cl+Ex	Cl+Ex	Cl+Ex
Detector 1 Channel							
Detector 1 Extend (s)	0.0	0.0	0.0	0.0	0.0	0.0	0.0
Detector 1 Queue (s)	0.0	0.0	0.0	0.0	0.0	0.0	0.0
Detector 1 Delay (s)	0.0	0.0	0.0	0.0	0.0	0.0	0.0
Detector 2 Position(ft)		94		94			
Detector 2 Size(ft)		6		6			
Detector 2 Type		Cl+Ex		Cl+Ex			
Detector 2 Channel							
Detector 2 Extend (s)		0.0		0.0			
Turn Type	D.P+P	NA	D.P+P	NA	pm+ov	Prot	pm+ov
Protected Phases	5	2	1	6	4	4	5

DocuSign Envelope ID: 5C03745C-4B01-4834-A65D-B77F558A4F46

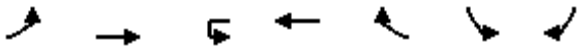

Lane Group	EBL	EBT	WBU	WBT	WBR	SBL	SBR
Permitted Phases	6		2		6		4
Detector Phase	5	2	1	6	4	4	5
Switch Phase							
Minimum Initial (s)	7.0	12.0	7.0	12.0	7.0	7.0	7.0
Minimum Split (s)	13.1	18.8	11.9	35.8	36.5	36.5	13.1
Total Split (s)	20.0	95.0	20.0	95.0	35.0	35.0	20.0
Total Split (%)	13.3%	63.3%	13.3%	63.3%	23.3%	23.3%	13.3%
Maximum Green (s)	13.9	88.2	15.1	88.2	28.5	28.5	13.9
Yellow Time (s)	3.0	4.9	3.0	4.9	3.0	3.0	3.0
All-Red Time (s)	3.1	1.9	1.9	1.9	3.5	3.5	3.1
Lost Time Adjust (s)	-1.1	-1.8	0.1	-1.8	-1.8	-1.5	-1.1
Total Lost Time (s)	5.0	5.0	5.0	5.0	4.7	5.0	5.0
Lead/Lag	Lead	Lag	Lead	Lag			Lead
Lead-Lag Optimize?	Yes	Yes	Yes	Yes			Yes
Vehicle Extension (s)	2.0	6.0	2.0	6.0	2.0	2.0	2.0
Minimum Gap (s)	0.2	3.0	0.2	3.0	0.2	0.2	0.2
Time Before Reduce (s)	0.0	15.0	0.0	15.0	0.0	0.0	0.0
Time To Reduce (s)	0.0	30.0	0.0	30.0	0.0	0.0	0.0
Recall Mode	None	C-Max	None	C-Max	None	None	None
Walk Time (s)				7.0	7.0	7.0	
Flash Dont Walk (s)				22.0	23.0	23.0	
Pedestrian Calls (#/hr)				0	0	0	
Act Effct Green (s)	120.2	125.2		112.1	132.2	14.8	27.9
Actuated g/C Ratio	0.80	0.83		0.75	0.88	0.10	0.19
v/c Ratio	0.14	0.37		0.45	0.06	0.60	0.27
Control Delay	3.5	3.6		11.6	2.8	79.0	53.8
Queue Delay	0.0	0.0		0.2	0.0	0.0	0.0
Total Delay	3.5	3.6		11.8	2.8	79.0	53.8
LOS	A	A		B	A	E	D
Approach Delay		3.6		11.2		68.1	
Approach LOS		A		B		E	
Queue Length 50th (ft)	7	104		268	20	96	65
Queue Length 95th (ft)	18	161		302	28	156	112
Internal Link Dist (ft)		1526		478		1028	
Turn Bay Length (ft)	150				175		175
Base Capacity (vph)	450	2842		2545	1491	340	353
Starvation Cap Reductn	0	0		613	0	0	0
Spillback Cap Reductn	0	0		0	0	0	0
Storage Cap Reductn	0	0		0	0	0	0
Reduced v/c Ratio	0.12	0.37		0.60	0.05	0.30	0.22

Intersection Summary	
Area Type:	Other
Cycle Length: 150	
Actuated Cycle Length: 150	
Offset: 131 (87%), Referenced to phase 2:EBWB and 6:EBWB, Start of Green	
Natural Cycle: 90	
Control Type: Actuated-Coordinated	
Maximum v/c Ratio: 0.60	

DocuSign Envelope ID: 5C03745C-4B01-4834-A65D-B77F558A4F46

Intersection Signal Delay: 11.9	Intersection LOS: B
Intersection Capacity Utilization 52.9%	ICU Level of Service A
Analysis Period (min) 15	

Splits and Phases: 1: NC 191 (Brevard Rd) & Commercial Access

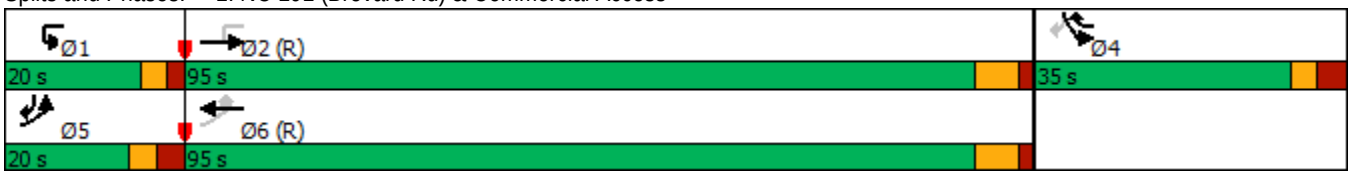

DocuSign Envelope ID: 5C03745C-4B01-4834-A65D-B77F558A4F46

Lane Group	EBT	EBR	WBL	WBT	NBL	NBR
Lane Configurations						
Traffic Volume (vph)	869	169	126	734	378	47
Future Volume (vph)	869	169	126	734	378	47
Ideal Flow (vphpl)	1900	1900	1900	1900	1900	1900
Grade (%)	-1%			-1%	0%	
Storage Length (ft)		225	200		0	0
Storage Lanes		1	1		2	1
Taper Length (ft)			25		25	
Lane Util. Factor	0.95	1.00	1.00	0.95	0.97	1.00
Frt		0.850				0.850
Flt Protected			0.950		0.950	
Satd. Flow (prot)	3423	1449	1620	3423	3303	1524
Flt Permitted			0.242		0.950	
Satd. Flow (perm)	3423	1449	413	3423	3303	1524
Right Turn on Red		No				Yes
Satd. Flow (RTOR)						50
Link Speed (mph)	45			45	45	
Link Distance (ft)	558			1204	323	
Travel Time (s)	8.5			18.2	4.9	
Peak Hour Factor	0.90	0.90	0.90	0.90	0.90	0.90
Heavy Vehicles (%)	6%	12%	12%	6%	6%	6%
Adj. Flow (vph)	966	188	140	816	420	52
Shared Lane Traffic (%)						
Lane Group Flow (vph)	966	188	140	816	420	52
Enter Blocked Intersection	No	No	No	No	No	No
Lane Alignment	Left	Right	Left	Left	Left	Right
Median Width(ft)	12			12	40	
Link Offset(ft)	0			0	0	
Crosswalk Width(ft)	16			16	16	
Two way Left Turn Lane						
Headway Factor	0.99	0.99	0.99	0.99	1.00	1.00
Turning Speed (mph)		9	15		15	9
Number of Detectors	2	1	1	2	1	1
Detector Template	Thru	Right	Left	Thru	Left	Right
Leading Detector (ft)	100	20	20	100	20	20
Trailing Detector (ft)	0	0	0	0	0	0
Detector 1 Position(ft)	0	0	0	0	0	0
Detector 1 Size(ft)	6	20	20	6	20	20
Detector 1 Type	Cl+Ex	Cl+Ex	Cl+Ex	Cl+Ex	Cl+Ex	Cl+Ex
Detector 1 Channel						
Detector 1 Extend (s)	0.0	0.0	0.0	0.0	0.0	0.0
Detector 1 Queue (s)	0.0	0.0	0.0	0.0	0.0	0.0
Detector 1 Delay (s)	0.0	0.0	0.0	0.0	0.0	0.0
Detector 2 Position(ft)	94			94		
Detector 2 Size(ft)	6			6		
Detector 2 Type	Cl+Ex			Cl+Ex		
Detector 2 Channel						
Detector 2 Extend (s)	0.0			0.0		
Turn Type	NA	pm+ov	D.P+P	NA	Prot	pm+ov

DocuSign Envelope ID: 5C03745C-4B01-4834-A65D-B77F558A4F46



Lane Group	EBT	EBR	WBL	WBT	NBL	NBR
Protected Phases	2	4	1	6	4	1
Permitted Phases		2	2			4
Detector Phase	2	4	1	6	4	1
Switch Phase						
Minimum Initial (s)	12.0	7.0	10.0	12.0	7.0	10.0
Minimum Split (s)	18.0	13.9	16.3	18.6	13.9	16.3
Total Split (s)	68.0	52.0	30.0	98.0	52.0	30.0
Total Split (%)	45.3%	34.7%	20.0%	65.3%	34.7%	20.0%
Maximum Green (s)	62.0	45.1	23.7	91.4	45.1	23.7
Yellow Time (s)	4.4	3.0	3.0	4.7	3.0	3.0
All-Red Time (s)	1.6	3.9	3.3	1.9	3.9	3.3
Lost Time Adjust (s)	-1.0	-1.9	-1.3	-1.6	-1.9	-1.9
Total Lost Time (s)	5.0	5.0	5.0	5.0	5.0	4.4
Lead/Lag	Lag		Lead			Lead
Lead-Lag Optimize?	Yes		Yes			Yes
Vehicle Extension (s)	6.0	5.0	2.5	6.0	5.0	2.5
Minimum Gap (s)	3.0	0.2	0.2	3.0	0.2	0.2
Time Before Reduce (s)	15.0	0.0	0.0	15.0	0.0	0.0
Time To Reduce (s)	30.0	0.0	0.0	30.0	0.0	0.0
Recall Mode	C-Max	None	None	C-Max	None	None
Act Effct Green (s)	93.5	127.9	105.6	110.6	29.4	47.1
Actuated g/C Ratio	0.62	0.85	0.70	0.74	0.20	0.31
v/c Ratio	0.45	0.15	0.36	0.32	0.65	0.10
Control Delay	17.7	3.3	5.2	2.5	60.0	8.8
Queue Delay	0.2	0.0	0.0	0.0	0.0	0.0
Total Delay	17.9	3.3	5.2	2.5	60.0	8.8
LOS	B	A	A	A	E	A
Approach Delay	15.5			2.9	54.4	
Approach LOS	B			A	D	
Queue Length 50th (ft)	276	30	21	30	197	1
Queue Length 95th (ft)	387	68	28	44	241	30
Internal Link Dist (ft)	478			1124	243	
Turn Bay Length (ft)		225	200			
Base Capacity (vph)	2133	1399	505	2524	1034	639
Starvation Cap Reductn	433	0	0	0	0	0
Spillback Cap Reductn	0	0	0	44	0	0
Storage Cap Reductn	0	0	0	0	0	0
Reduced v/c Ratio	0.57	0.13	0.28	0.33	0.41	0.08

Intersection Summary			
Area Type:	Other		
Cycle Length: 150			
Actuated Cycle Length: 150			
Offset: 15 (10%), Referenced to phase 2:EBWB and 6:WBT, Start of Green			
Natural Cycle: 60			
Control Type: Actuated-Coordinated			
Maximum v/c Ratio: 0.65			
Intersection Signal Delay: 17.9		Intersection LOS: B	
Intersection Capacity Utilization 55.6%		ICU Level of Service B	

DocuSign Envelope ID: 5C03745C-4B01-4834-A65D-B77F558A4F46

Analysis Period (min) 15

Splits and Phases: 2: I-26 SEB Ramps & NC 191 (Brevard Rd)



DocuSign Envelope ID: 5C03745C-4B01-4834-A65D-B77F558A4F46

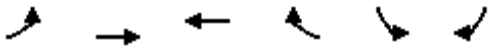

Lane Group	EBL	EBT	WBT	WBR	SBL	SBR
Lane Configurations						
Traffic Volume (vph)	278	638	653	31	174	207
Future Volume (vph)	278	638	653	31	174	207
Ideal Flow (vphpl)	1900	1900	1900	1900	1900	1900
Grade (%)		2%	-2%		2%	
Storage Length (ft)	625			200	0	400
Storage Lanes	2			1	2	1
Taper Length (ft)	25				25	
Lane Util. Factor	0.97	0.95	0.95	1.00	0.97	1.00
Frt				0.850		0.850
Flt Protected	0.950				0.950	
Satd. Flow (prot)	3095	3340	3408	1456	3240	1494
Flt Permitted	0.950				0.950	
Satd. Flow (perm)	3095	3340	3408	1456	3240	1494
Right Turn on Red				No		No
Satd. Flow (RTOR)						
Link Speed (mph)		45	45		45	
Link Distance (ft)		802	1565		860	
Travel Time (s)		12.2	23.7		13.0	
Peak Hour Factor	0.90	0.90	0.90	0.90	0.90	0.90
Heavy Vehicles (%)	12%	7%	7%	12%	7%	7%
Adj. Flow (vph)	309	709	726	34	193	230
Shared Lane Traffic (%)						
Lane Group Flow (vph)	309	709	726	34	193	230
Enter Blocked Intersection	No	No	No	No	No	No
Lane Alignment	Left	Left	Left	Right	Left	Right
Median Width(ft)		24	12		36	
Link Offset(ft)		0	0		0	
Crosswalk Width(ft)		16	16		16	
Two way Left Turn Lane						
Headway Factor	1.01	1.01	0.99	0.99	1.01	1.01
Turning Speed (mph)	15			9	15	9
Number of Detectors	1	2	2	1	1	1
Detector Template	Left	Thru	Thru	Right	Left	Right
Leading Detector (ft)	20	100	100	20	20	20
Trailing Detector (ft)	0	0	0	0	0	0
Detector 1 Position(ft)	0	0	0	0	0	0
Detector 1 Size(ft)	20	6	6	20	20	20
Detector 1 Type	Cl+Ex	Cl+Ex	Cl+Ex	Cl+Ex	Cl+Ex	Cl+Ex
Detector 1 Channel						
Detector 1 Extend (s)	0.0	0.0	0.0	0.0	0.0	0.0
Detector 1 Queue (s)	0.0	0.0	0.0	0.0	0.0	0.0
Detector 1 Delay (s)	0.0	0.0	0.0	0.0	0.0	0.0
Detector 2 Position(ft)		94	94			
Detector 2 Size(ft)		6	6			
Detector 2 Type		Cl+Ex	Cl+Ex			
Detector 2 Channel						
Detector 2 Extend (s)		0.0	0.0			
Turn Type	Prot	NA	NA	pm+ov	Prot	pm+ov

DocuSign Envelope ID: 5C03745C-4B01-4834-A65D-B77F558A4F46

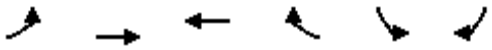

Lane Group	EBL	EBT	WBT	WBR	SBL	SBR
Protected Phases	5	2	6	4	4	5
Permitted Phases				6		4
Detector Phase	5	2	6	4	4	5
Switch Phase						
Minimum Initial (s)	7.0	12.0	12.0	7.0	7.0	7.0
Minimum Split (s)	14.0	19.0	25.0	25.0	25.0	14.0
Total Split (s)	42.0	116.0	74.0	34.0	34.0	42.0
Total Split (%)	28.0%	77.3%	49.3%	22.7%	22.7%	28.0%
Maximum Green (s)	35.0	109.0	67.0	27.0	27.0	35.0
Yellow Time (s)	5.0	5.0	5.0	5.0	5.0	5.0
All-Red Time (s)	2.0	2.0	2.0	2.0	2.0	2.0
Lost Time Adjust (s)	-2.0	-2.0	-2.0	-2.0	-2.0	-2.0
Total Lost Time (s)	5.0	5.0	5.0	5.0	5.0	5.0
Lead/Lag	Lag		Lead			Lag
Lead-Lag Optimize?	Yes		Yes			Yes
Vehicle Extension (s)	3.0	3.0	3.0	3.0	3.0	3.0
Minimum Gap (s)	0.2	3.0	3.0	0.2	0.2	0.2
Time Before Reduce (s)	0.0	15.0	15.0	0.0	0.0	0.0
Time To Reduce (s)	0.0	30.0	30.0	0.0	0.0	0.0
Recall Mode	None	C-Max	C-Max	None	None	None
Walk Time (s)			7.0	7.0	7.0	
Flash Dont Walk (s)			11.0	11.0	11.0	
Pedestrian Calls (#/hr)			0	0	0	
Act Effct Green (s)	37.0	123.7	81.7	103.0	16.3	58.3
Actuated g/C Ratio	0.25	0.82	0.54	0.69	0.11	0.39
v/c Ratio	0.40	0.26	0.39	0.03	0.55	0.40
Control Delay	31.1	2.9	20.9	7.7	69.1	35.1
Queue Delay	0.0	0.0	0.0	0.0	0.0	0.0
Total Delay	31.1	2.9	20.9	7.7	69.1	35.1
LOS	C	A	C	A	E	D
Approach Delay		11.5	20.3		50.6	
Approach LOS		B	C		D	
Queue Length 50th (ft)	104	60	210	10	93	162
Queue Length 95th (ft)	61	83	273	22	132	229
Internal Link Dist (ft)		722	1485		780	
Turn Bay Length (ft)	625			200		400
Base Capacity (vph)	763	2755	1857	999	626	580
Starvation Cap Reductn	0	0	0	0	0	0
Spillback Cap Reductn	0	0	0	0	0	0
Storage Cap Reductn	0	0	0	0	0	0
Reduced v/c Ratio	0.40	0.26	0.39	0.03	0.31	0.40

Intersection Summary	
Area Type:	Other
Cycle Length: 150	
Actuated Cycle Length: 150	
Offset: 101 (67%), Referenced to phase 2:EBT and 6:WBT, Start of Green	
Natural Cycle: 65	
Control Type: Actuated-Coordinated	

DocuSign Envelope ID: 5C03745C-4B01-4834-A65D-B77F558A4F46

Maximum v/c Ratio: 0.55	
Intersection Signal Delay: 22.0	Intersection LOS: C
Intersection Capacity Utilization 44.3%	ICU Level of Service A
Analysis Period (min) 15	

Splits and Phases: 3: NC 191 (Brevard Rd) & I-26 NWB Ramps

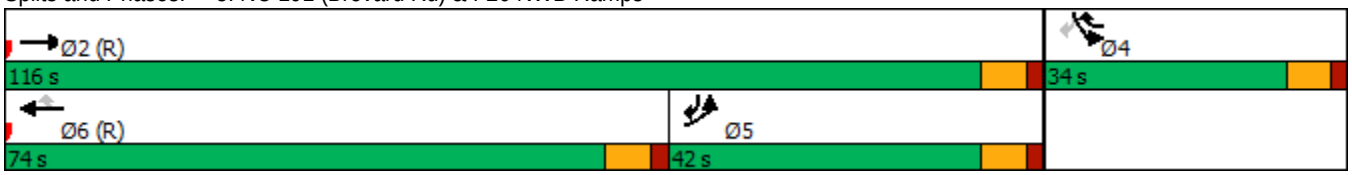

DocuSign Envelope ID: 5C03745C-4B01-4834-A65D-B77F558A4F46

Intersection	
Int Delay, s/veh	2.3

Movement	EBL	EBR	NBL	NBT	SBT	SBR
Lane Configurations						
Traffic Vol, veh/h	43	18	21	82	116	63
Future Vol, veh/h	43	18	21	82	116	63
Conflicting Peds, #/hr	0	0	0	0	0	0
Sign Control	Stop	Stop	Free	Free	Free	Free
RT Channelized	-	None	-	None	-	None
Storage Length	75	0	275	-	-	-
Veh in Median Storage, #	0	-	-	0	0	-
Grade, %	0	-	-	0	3	-
Peak Hour Factor	90	90	90	90	90	90
Heavy Vehicles, %	2	2	2	2	2	2
Mvmt Flow	48	20	23	91	129	70

Major/Minor	Minor2		Major1		Major2	
Conflicting Flow All	301	164	199	0	-	0
Stage 1	164	-	-	-	-	-
Stage 2	137	-	-	-	-	-
Critical Hdwy	6.42	6.22	4.12	-	-	-
Critical Hdwy Stg 1	5.42	-	-	-	-	-
Critical Hdwy Stg 2	5.42	-	-	-	-	-
Follow-up Hdwy	3.518	3.318	2.218	-	-	-
Pot Cap-1 Maneuver	691	881	1373	-	-	-
Stage 1	865	-	-	-	-	-
Stage 2	890	-	-	-	-	-
Platoon blocked, %				-	-	-
Mov Cap-1 Maneuver	679	881	1373	-	-	-
Mov Cap-2 Maneuver	679	-	-	-	-	-
Stage 1	850	-	-	-	-	-
Stage 2	890	-	-	-	-	-

Approach	EB	NB	SB
HCM Control Delay, s	10.3	1.6	0
HCM LOS	B		

Minor Lane/Major Mvmt	NBL	NBT	EBLn1	EBLn2	SBT	SBR
Capacity (veh/h)	1373	-	679	881	-	-
HCM Lane V/C Ratio	0.017	-	0.07	0.023	-	-
HCM Control Delay (s)	7.7	-	10.7	9.2	-	-
HCM Lane LOS	A	-	B	A	-	-
HCM 95th %tile Q(veh)	0.1	-	0.2	0.1	-	-

DocuSign Envelope ID: 5C03745C-4B01-4834-A65D-B77F558A4F46

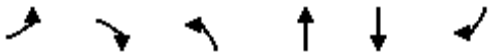

Lane Group	EBL	EBR	NBL	NBT	SBT	SBR
Lane Configurations						
Traffic Volume (vph)	87	38	59	653	578	120
Future Volume (vph)	87	38	59	653	578	120
Ideal Flow (vphpl)	1900	1900	1900	1900	1900	1900
Grade (%)	3%			2%	-7%	
Storage Length (ft)	0	0	150			0
Storage Lanes	1	1	1			1
Taper Length (ft)	25		25			
Lane Util. Factor	1.00	1.00	1.00	1.00	1.00	1.00
Frt		0.850				0.850
Flt Protected	0.950		0.950			
Satd. Flow (prot)	1743	1560	1686	1775	1873	1592
Flt Permitted	0.950		0.370			
Satd. Flow (perm)	1743	1560	657	1775	1873	1592
Right Turn on Red		No				Yes
Satd. Flow (RTOR)						55
Link Speed (mph)	35			45	45	
Link Distance (ft)	248			1589	1600	
Travel Time (s)	4.8			24.1	24.2	
Peak Hour Factor	0.90	0.90	0.90	0.90	0.90	0.90
Heavy Vehicles (%)	2%	2%	6%	6%	5%	5%
Adj. Flow (vph)	97	42	66	726	642	133
Shared Lane Traffic (%)						
Lane Group Flow (vph)	97	42	66	726	642	133
Enter Blocked Intersection	No	No	No	No	No	No
Lane Alignment	L NA	Right	Left	L NA	Left	Right
Median Width(ft)	12			12	7	
Link Offset(ft)	0			0	0	
Crosswalk Width(ft)	16			16	16	
Two way Left Turn Lane						
Headway Factor	1.02	1.02	1.01	1.01	0.96	0.96
Turning Speed (mph)	15	9	15			9
Number of Detectors	1	1	1	2	2	1
Detector Template	Left	Right	Left	Thru	Thru	Right
Leading Detector (ft)	20	20	20	100	100	20
Trailing Detector (ft)	0	0	0	0	0	0
Detector 1 Position(ft)	0	0	0	0	0	0
Detector 1 Size(ft)	20	20	20	6	6	20
Detector 1 Type	Cl+Ex	Cl+Ex	Cl+Ex	Cl+Ex	Cl+Ex	Cl+Ex
Detector 1 Channel						
Detector 1 Extend (s)	0.0	0.0	0.0	0.0	0.0	0.0
Detector 1 Queue (s)	0.0	0.0	0.0	0.0	0.0	0.0
Detector 1 Delay (s)	0.0	0.0	0.0	0.0	0.0	0.0
Detector 2 Position(ft)				94	94	
Detector 2 Size(ft)				6	6	
Detector 2 Type				Cl+Ex	Cl+Ex	
Detector 2 Channel						
Detector 2 Extend (s)				0.0	0.0	
Turn Type	Prot	pm+ov	D.P+P	NA	NA	Free

DocuSign Envelope ID: 5C03745C-4B01-4834-A65D-B77F558A4F46

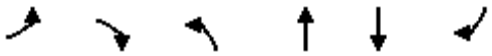

Lane Group	EBL	EBR	NBL	NBT	SBT	SBR
Protected Phases	4	5	5	2	6	
Permitted Phases		4	6			Free
Detector Phase	4	5	5	2	6	
Switch Phase						
Minimum Initial (s)	7.0	7.0	7.0	12.0	12.0	
Minimum Split (s)	12.3	11.4	11.4	18.4	18.4	
Total Split (s)	40.0	28.0	28.0	110.0	82.0	
Total Split (%)	26.7%	18.7%	18.7%	73.3%	54.7%	
Maximum Green (s)	34.7	23.6	23.6	103.6	75.6	
Yellow Time (s)	3.0	3.0	3.0	5.2	5.2	
All-Red Time (s)	2.3	1.4	1.4	1.2	1.2	
Lost Time Adjust (s)	-0.3	0.6	0.6	-1.4	-1.4	
Total Lost Time (s)	5.0	5.0	5.0	5.0	5.0	
Lead/Lag		Lead	Lead		Lag	
Lead-Lag Optimize?		Yes	Yes		Yes	
Vehicle Extension (s)	3.0	1.5	1.5	6.0	6.0	
Minimum Gap (s)	0.2	0.2	0.2	3.0	3.0	
Time Before Reduce (s)	0.0	0.0	0.0	15.0	15.0	
Time To Reduce (s)	0.0	0.0	0.0	30.0	30.0	
Recall Mode	None	None	None	C-Max	C-Max	
Act Effct Green (s)	14.0	25.4	122.0	126.0	116.9	150.0
Actuated g/C Ratio	0.09	0.17	0.81	0.84	0.78	1.00
v/c Ratio	0.60	0.16	0.11	0.49	0.44	0.08
Control Delay	79.6	53.1	2.9	4.8	7.5	0.1
Queue Delay	0.0	0.0	0.0	0.0	0.0	0.0
Total Delay	79.6	53.1	2.9	4.8	7.5	0.1
LOS	E	D	A	A	A	A
Approach Delay	71.6			4.7	6.2	
Approach LOS	E			A	A	
Queue Length 50th (ft)	93	36	9	154	200	0
Queue Length 95th (ft)	151	71	21	264	309	0
Internal Link Dist (ft)	168			1509	1520	
Turn Bay Length (ft)			150			
Base Capacity (vph)	406	436	709	1490	1459	1592
Starvation Cap Reductn	0	0	0	0	0	0
Spillback Cap Reductn	0	0	0	0	0	0
Storage Cap Reductn	0	0	0	0	0	0
Reduced v/c Ratio	0.24	0.10	0.09	0.49	0.44	0.08

Intersection Summary			
Area Type:	Other		
Cycle Length: 150			
Actuated Cycle Length: 150			
Offset: 146 (97%), Referenced to phase 2:NBT and 6:NBSB, Start of Green			
Natural Cycle: 60			
Control Type: Actuated-Coordinated			
Maximum v/c Ratio: 0.60			
Intersection Signal Delay: 10.8		Intersection LOS: B	
Intersection Capacity Utilization 54.6%		ICU Level of Service A	

DocuSign Envelope ID: 5C03745C-4B01-4834-A65D-B77F558A4F46

Analysis Period (min) 15

Splits and Phases: 5: NC 191 (Brevard Rd) & Blue Ridge Pkwy Access

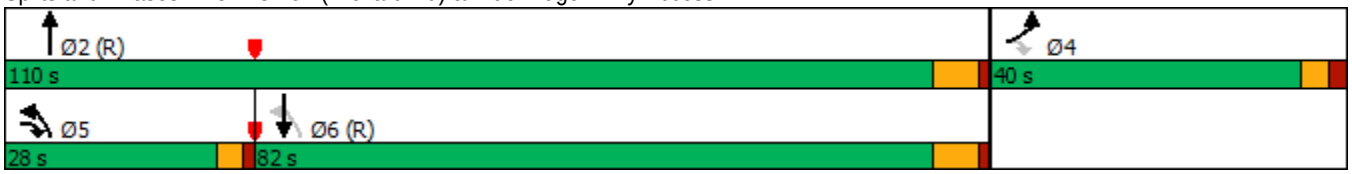

DocuSign Envelope ID: 5C03745C-4B01-4834-A65D-B77F558A4F46

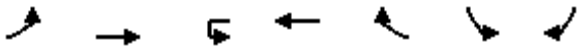

Lane Group	EBL	EBT	WBU	WBT	WBR	SBL	SBR
Lane Configurations							
Traffic Volume (vph)	19	480	0	504	312	396	26
Future Volume (vph)	19	480	0	504	312	396	26
Ideal Flow (vphpl)	1900	1900	1900	1900	1900	1900	1900
Grade (%)		-9%		5%		-9%	
Storage Length (ft)	500		350		0	0	400
Storage Lanes	1		1		1	2	1
Taper Length (ft)	25		25			25	
Lane Util. Factor	1.00	1.00	1.00	1.00	1.00	0.97	1.00
Frt					0.850		0.850
Flt Protected	0.950					0.950	
Satd. Flow (prot)	1715	1805	1715	1715	1458	3485	1607
Flt Permitted	0.363					0.950	
Satd. Flow (perm)	655	1805	1715	1715	1458	3485	1607
Right Turn on Red					No		No
Satd. Flow (RTOR)							
Link Speed (mph)		35		35		45	
Link Distance (ft)		1579		1808		1089	
Travel Time (s)		30.8		35.2		16.5	
Peak Hour Factor	0.90	0.90	0.90	0.90	0.90	0.90	0.90
Heavy Vehicles (%)	10%	10%	8%	8%	8%	5%	5%
Adj. Flow (vph)	21	533	0	560	347	440	29
Shared Lane Traffic (%)							
Lane Group Flow (vph)	21	533	0	560	347	440	29
Enter Blocked Intersection	No	No	No	No	No	No	No
Lane Alignment	Left	Left	R NA	Left	Right	Left	Right
Median Width(ft)		12		12		24	
Link Offset(ft)		0		0		0	
Crosswalk Width(ft)		16		16		16	
Two way Left Turn Lane							
Headway Factor	0.94	0.94	1.03	1.03	1.03	0.94	0.94
Turning Speed (mph)	15		9		9	15	9
Number of Detectors	1	2	1	2	1	1	1
Detector Template	Left	Thru	Left	Thru	Right	Left	Right
Leading Detector (ft)	20	100	20	100	20	20	20
Trailing Detector (ft)	0	0	0	0	0	0	0
Detector 1 Position(ft)	0	0	0	0	0	0	0
Detector 1 Size(ft)	20	6	20	6	20	20	20
Detector 1 Type	Cl+Ex	Cl+Ex	Cl+Ex	Cl+Ex	Cl+Ex	Cl+Ex	Cl+Ex
Detector 1 Channel							
Detector 1 Extend (s)	0.0	0.0	0.0	0.0	0.0	0.0	0.0
Detector 1 Queue (s)	0.0	0.0	0.0	0.0	0.0	0.0	0.0
Detector 1 Delay (s)	0.0	0.0	0.0	0.0	0.0	0.0	0.0
Detector 2 Position(ft)		94		94			
Detector 2 Size(ft)		6		6			
Detector 2 Type		Cl+Ex		Cl+Ex			
Detector 2 Channel							
Detector 2 Extend (s)		0.0		0.0			
Turn Type	D.P+P	NA	D.P+P	NA	pm+ov	Prot	pm+ov

DocuSign Envelope ID: 5C03745C-4B01-4834-A65D-B77F558A4F46

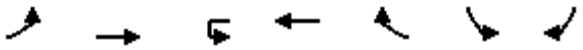

Lane Group	EBL	EBT	WBU	WBT	WBR	SBL	SBR
Protected Phases	5	2	1	6	4	4	5
Permitted Phases	6		2		6		4
Detector Phase	5	2	1	6	4	4	5
Switch Phase							
Minimum Initial (s)	7.0	10.0	7.0	10.0	7.0	7.0	7.0
Minimum Split (s)	13.7	17.3	13.3	17.3	13.8	13.8	13.7
Total Split (s)	15.0	75.0	15.0	75.0	30.0	30.0	15.0
Total Split (%)	12.5%	62.5%	12.5%	62.5%	25.0%	25.0%	12.5%
Maximum Green (s)	8.3	67.7	8.7	67.7	23.2	23.2	8.3
Yellow Time (s)	3.3	4.6	3.0	4.6	3.3	3.3	3.3
All-Red Time (s)	3.4	2.7	3.3	2.7	3.5	3.5	3.4
Lost Time Adjust (s)	-1.7	-2.3	-1.3	-2.3	-2.3	-1.8	-1.8
Total Lost Time (s)	5.0	5.0	5.0	5.0	4.5	5.0	4.9
Lead/Lag	Lead	Lead	Lag	Lag			Lead
Lead-Lag Optimize?	Yes	Yes	Yes	Yes			Yes
Vehicle Extension (s)	2.0	3.0	2.0	3.0	3.0	3.0	2.0
Recall Mode	None	C-Max	None	C-Max	None	None	None
Act Effct Green (s)	84.0	88.0		77.0	105.4	22.0	35.8
Actuated g/C Ratio	0.70	0.73		0.64	0.88	0.18	0.30
v/c Ratio	0.04	0.40		0.51	0.27	0.69	0.06
Control Delay	5.3	7.5		15.6	3.3	51.5	29.2
Queue Delay	0.0	0.0		0.0	0.0	0.0	0.0
Total Delay	5.3	7.5		15.6	3.3	51.5	29.2
LOS	A	A		B	A	D	C
Approach Delay		7.4		10.9		50.1	
Approach LOS		A		B		D	
Queue Length 50th (ft)	4	141		238	67	164	16
Queue Length 95th (ft)	12	213		469	102	215	38
Internal Link Dist (ft)		1499		1728		1009	
Turn Bay Length (ft)	500						400
Base Capacity (vph)	552	1323		1100	1298	726	497
Starvation Cap Reductn	0	0		0	0	0	0
Spillback Cap Reductn	0	0		0	0	0	0
Storage Cap Reductn	0	0		0	0	0	0
Reduced v/c Ratio	0.04	0.40		0.51	0.27	0.61	0.06

Intersection Summary			
Area Type:	Other		
Cycle Length: 120			
Actuated Cycle Length: 120			
Offset: 106 (88%), Referenced to phase 2:EBWB and 6:EBWB, Start of Green			
Natural Cycle: 60			
Control Type: Actuated-Coordinated			
Maximum v/c Ratio: 0.69			
Intersection Signal Delay: 19.4		Intersection LOS: B	
Intersection Capacity Utilization 46.2%		ICU Level of Service A	
Analysis Period (min) 15			

DocuSign Envelope ID: 5C03745C-4B01-4834-A65D-B77F558A4F46

Splits and Phases: 8: NC 146 (Long Shoals Rd) & Clayton Rd

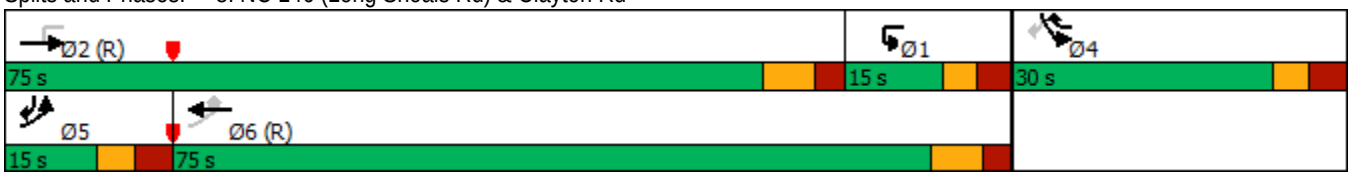

DocuSign Envelope ID: 5C03745C-4B01-4834-A65D-B77F558A4F46

Intersection	
Int Delay, s/veh	4.8

Movement	EBU	EBT	EBR	WBL	WBT	NBL	NBR
Lane Configurations							
Traffic Vol, veh/h	0	829	10	135	833	20	308
Future Vol, veh/h	0	829	10	135	833	20	308
Conflicting Peds, #/hr	0	0	0	0	0	0	0
Sign Control	Free	Free	Free	Free	Free	Stop	Stop
RT Channelized	-	-	None	-	None	-	Stop
Storage Length	325	-	-	325	-	200	0
Veh in Median Storage, #	-	0	-	-	0	0	-
Grade, %	-	0	-	-	0	0	-
Peak Hour Factor	90	90	90	90	90	90	90
Heavy Vehicles, %	8	8	8	8	8	3	3
Mvmt Flow	0	921	11	150	926	22	342

Major/Minor	Major1			Major2		Minor1	
Conflicting Flow All	926	0	0	932	0	1690	466
Stage 1	-	-	-	-	-	927	-
Stage 2	-	-	-	-	-	763	-
Critical Hdwy	6.56	-	-	4.26	-	6.86	6.96
Critical Hdwy Stg 1	-	-	-	-	-	5.86	-
Critical Hdwy Stg 2	-	-	-	-	-	5.86	-
Follow-up Hdwy	2.58	-	-	2.28	-	3.53	3.33
Pot Cap-1 Maneuver	353	-	-	694	-	83	541
Stage 1	-	-	-	-	-	343	-
Stage 2	-	-	-	-	-	418	-
Platoon blocked, %		-	-		-		
Mov Cap-1 Maneuver	353	-	-	694	-	65	541
Mov Cap-2 Maneuver	-	-	-	-	-	65	-
Stage 1	-	-	-	-	-	343	-
Stage 2	-	-	-	-	-	328	-

Approach	EB	WB	NB
HCM Control Delay, s	0	1.6	26.3
HCM LOS			D

Minor Lane/Major Mvmt	NBLn1	NBLn2	EBU	EBT	EBR	WBL	WBT
Capacity (veh/h)	65	541	353	-	-	694	-
HCM Lane V/C Ratio	0.342	0.633	-	-	-	0.216	-
HCM Control Delay (s)	86.8	22.4	0	-	-	11.6	-
HCM Lane LOS	F	C	A	-	-	B	-
HCM 95th %tile Q(veh)	1.3	4.4	0	-	-	0.8	-

DocuSign Envelope ID: 5C03745C-4B01-4834-A65D-B77F558A4F46

Lane Group	EBL	EBT	EBR2	WBL	WBT	SEL	SER2	NWL
Lane Configurations								
Traffic Volume (vph)	148	811	178	272	542	712	186	240
Future Volume (vph)	148	811	178	272	542	712	186	240
Ideal Flow (vphpl)	1900	1900	1900	1900	1900	1900	1900	1900
Grade (%)		3%			-7%			
Storage Length (ft)	475			0		0		0
Storage Lanes	2			2		2		2
Taper Length (ft)	25			25		25		25
Lane Util. Factor	0.97	0.95	1.00	0.97	0.95	0.97	1.00	0.97
Frt			0.850				0.850	
Flt Protected	0.950			0.950		0.950		0.950
Satd. Flow (prot)	3080	3292	1420	3236	3593	3434	1525	3291
Flt Permitted	0.950			0.950		0.950		0.950
Satd. Flow (perm)	3080	3292	1420	3236	3593	3434	1525	3291
Right Turn on Red			Yes				Yes	
Satd. Flow (RTOR)			285				285	
Link Speed (mph)		45			45			
Link Distance (ft)		1000			418			
Travel Time (s)		15.2			6.3			
Peak Hour Factor	0.90	0.90	0.90	0.90	0.90	0.90	0.90	0.90
Heavy Vehicles (%)	12%	8%	12%	12%	4%	4%	8%	8%
Adj. Flow (vph)	164	901	198	302	602	791	207	267
Shared Lane Traffic (%)								
Lane Group Flow (vph)	164	901	198	302	602	791	207	267
Enter Blocked Intersection	No	No	No	No	No	No	No	No
Lane Alignment	Left	Left	Right	Left	Left	Left	Right	Left
Median Width(ft)		24			24			
Link Offset(ft)		0			0			
Crosswalk Width(ft)		16			16			
Two way Left Turn Lane								
Headway Factor	1.02	1.02	1.02	0.96	0.96	0.97	0.97	0.98
Turning Speed (mph)	15		9	15		15	9	15
Number of Detectors	1	2	1	1	2	1	1	1
Detector Template	Left	Thru	Right	Left	Thru	Left	Right	Left
Leading Detector (ft)	20	100	20	20	100	20	20	20
Trailing Detector (ft)	0	0	0	0	0	0	0	0
Detector 1 Position(ft)	0	0	0	0	0	0	0	0
Detector 1 Size(ft)	20	6	20	20	6	20	20	20
Detector 1 Type	Cl+Ex	Cl+Ex	Cl+Ex	Cl+Ex	Cl+Ex	Cl+Ex	Cl+Ex	Cl+Ex
Detector 1 Channel								
Detector 1 Extend (s)	0.0	0.0	0.0	0.0	0.0	0.0	0.0	0.0
Detector 1 Queue (s)	0.0	0.0	0.0	0.0	0.0	0.0	0.0	0.0
Detector 1 Delay (s)	0.0	0.0	0.0	0.0	0.0	0.0	0.0	0.0
Detector 2 Position(ft)		94			94			
Detector 2 Size(ft)		6			6			
Detector 2 Type		Cl+Ex			Cl+Ex			
Detector 2 Channel								
Detector 2 Extend (s)		0.0			0.0			
Turn Type	Prot	NA	Free	Prot	NA	Prot	Free	Prot

DocuSign Envelope ID: 5C03745C-4B01-4834-A65D-B77F558A4F46

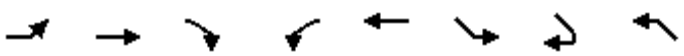

Lane Group	EBL	EBT	EBR2	WBL	WBT	SEL	SER2	NWL
Protected Phases	5	2		1	6	4		8
Permitted Phases			Free				Free	
Detector Phase	5	2		1	6	4		8
Switch Phase								
Minimum Initial (s)	7.0	12.0		7.0	12.0	7.0		7.0
Minimum Split (s)	15.3	21.0		14.5	21.0	15.0		15.0
Total Split (s)	17.0	60.0		31.0	74.0	29.0		29.0
Total Split (%)	14.2%	50.0%		25.8%	61.7%	24.2%		24.2%
Maximum Green (s)	8.7	51.0		23.5	65.0	21.0		21.0
Yellow Time (s)	3.1	5.2		3.6	5.2	3.5		3.5
All-Red Time (s)	5.2	3.8		3.9	3.8	4.5		4.5
Lost Time Adjust (s)	-3.3	-4.0		-2.5	-4.0	-3.0		-3.0
Total Lost Time (s)	5.0	5.0		5.0	5.0	5.0		5.0
Lead/Lag	Lead	Lead		Lag	Lag			
Lead-Lag Optimize?	Yes	Yes		Yes	Yes			
Vehicle Extension (s)	2.0	6.0		2.0	6.0	2.0		2.0
Minimum Gap (s)	0.2	3.0		0.2	3.0	0.2		0.2
Time Before Reduce (s)	0.0	15.0		0.0	15.0	0.0		0.0
Time To Reduce (s)	0.0	30.0		0.0	30.0	0.0		0.0
Recall Mode	None	C-Max		None	C-Max	None		None
Act Effct Green (s)	11.9	55.0	120.0	26.0	69.1	24.0	120.0	24.0
Actuated g/C Ratio	0.10	0.46	1.00	0.22	0.58	0.20	1.00	0.20
v/c Ratio	0.54	0.60	0.14	0.43	0.29	1.15	0.14	0.41
Control Delay	55.0	19.0	0.2	28.4	6.7	127.9	0.2	44.0
Queue Delay	0.0	8.3	0.0	0.0	0.3	1.1	0.0	0.0
Total Delay	55.0	27.3	0.2	28.4	7.0	129.0	0.2	44.0
LOS	D	C	A	C	A	F	A	D
Approach Delay		26.6			14.2			
Approach LOS		C			B			
Queue Length 50th (ft)	50	276	0	104	63	~371	0	93
Queue Length 95th (ft)	87	331	0	129	77	#495	0	135
Internal Link Dist (ft)		920			338			
Turn Bay Length (ft)	475							
Base Capacity (vph)	308	1508	1420	701	2067	686	1525	658
Starvation Cap Reductn	0	0	0	0	848	0	0	0
Spillback Cap Reductn	0	567	0	0	0	98	0	0
Storage Cap Reductn	0	0	0	0	0	0	0	0
Reduced v/c Ratio	0.53	0.96	0.14	0.43	0.49	1.35	0.14	0.41

Intersection Summary			
Area Type:	Other		
Cycle Length: 120			
Actuated Cycle Length: 120			
Offset: 0 (0%), Referenced to phase 2:EBT and 6:WBT, Start of Green, Master Intersection			
Natural Cycle: 140			
Control Type: Actuated-Coordinated			
Maximum v/c Ratio: 1.15			
Intersection Signal Delay: 46.7		Intersection LOS: D	
Intersection Capacity Utilization 63.0%		ICU Level of Service B	

DocuSign Envelope ID: 5C03745C-4B01-4834-A65D-B77F558A4F46

Analysis Period (min) 15

~ Volume exceeds capacity, queue is theoretically infinite.
Queue shown is maximum after two cycles.

95th percentile volume exceeds capacity, queue may be longer.
Queue shown is maximum after two cycles.

Splits and Phases: 10: I-26 Ramp & NC 146 (Long Shoals Rd)

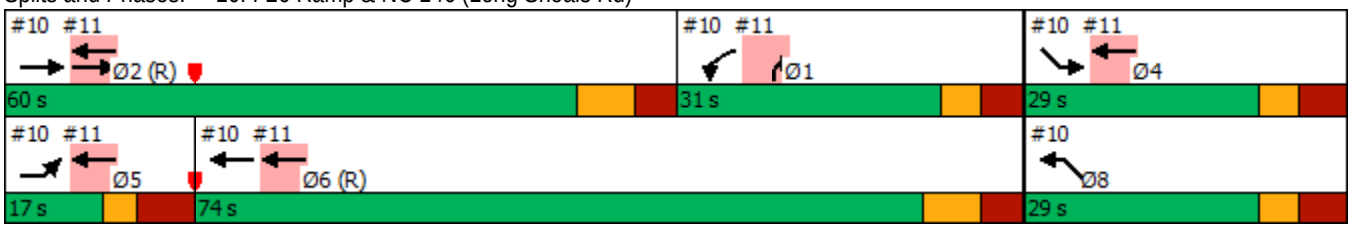

DocuSign Envelope ID: 5C03745C-4B01-4834-A65D-B77F558A4F46

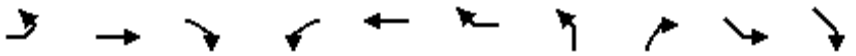

Lane Group	EBL	EBT	EBR	WBL	WBT	WBR	NBL	NBR	SEL	SER	Ø4	Ø5
Lane Configurations		↑↑			↑↑	↱		↱↱				
Traffic Volume (vph)	0	1523	0	0	814	379	0	548	0	0		
Future Volume (vph)	0	1523	0	0	814	379	0	548	0	0		
Ideal Flow (vphpl)	1900	1900	1900	1900	1900	1900	1900	1900	1900	1900		
Storage Length (ft)	0		0	0		275	0	0	0	0		
Storage Lanes	0		0	0		1	0	2	0	0		
Taper Length (ft)	25			25			25		25			
Lane Util. Factor	1.00	0.95	1.00	1.00	0.95	1.00	1.00	0.88	1.00	1.00		
Frt						0.850		0.850				
Flt Protected												
Satd. Flow (prot)	0	3471	0	0	3471	1442	0	2733	0	0		
Flt Permitted												
Satd. Flow (perm)	0	3471	0	0	3471	1442	0	2733	0	0		
Right Turn on Red			No			No		No				
Satd. Flow (RTOR)												
Link Speed (mph)		45			45		45		45			
Link Distance (ft)		418			593		396		464			
Travel Time (s)		6.3			9.0		6.0		7.0			
Peak Hour Factor	0.90	0.90	0.90	0.90	0.90	0.90	0.90	0.90	0.90	0.90		
Heavy Vehicles (%)	2%	4%	2%	2%	4%	12%	2%	4%	2%	2%		
Adj. Flow (vph)	0	1692	0	0	904	421	0	609	0	0		
Shared Lane Traffic (%)												
Lane Group Flow (vph)	0	1692	0	0	904	421	0	609	0	0		
Enter Blocked Intersection	No	No	No	No	No	No	No	No	No	No		
Lane Alignment	Left	L NA	Right	Left	Right	Right	Left	R NA	Left	Right		
Median Width(ft)		0			24		0		0			
Link Offset(ft)		0			0		0		0			
Crosswalk Width(ft)		16			16		16		16			
Two way Left Turn Lane												
Headway Factor	1.00	1.00	1.00	1.00	1.00	1.00	1.00	1.00	1.00	1.00		
Turning Speed (mph)	15		9	15		9	15	9	15	9		
Number of Detectors		2			2	1		1				
Detector Template		Thru			Thru	Right		Right				
Leading Detector (ft)		100			100	20		20				
Trailing Detector (ft)		0			0	0		0				
Detector 1 Position(ft)		0			0	0		0				
Detector 1 Size(ft)		6			6	20		20				
Detector 1 Type		Cl+Ex			Cl+Ex	Cl+Ex		Cl+Ex				
Detector 1 Channel												
Detector 1 Extend (s)		0.0			0.0	0.0		0.0				
Detector 1 Queue (s)		0.0			0.0	0.0		0.0				
Detector 1 Delay (s)		0.0			0.0	0.0		0.0				
Detector 2 Position(ft)		94			94							
Detector 2 Size(ft)		6			6							
Detector 2 Type		Cl+Ex			Cl+Ex							
Detector 2 Channel												
Detector 2 Extend (s)		0.0			0.0							
Turn Type		NA			NA	Free		Prot				
Protected Phases		2			2 4 5 6			1			4	5

DocuSign Envelope ID: 5C03745C-4B01-4834-A65D-B77F558A4F46

Lane Group	Ø6	Ø8
Lane Configurations		
Traffic Volume (vph)		
Future Volume (vph)		
Ideal Flow (vphpl)		
Storage Length (ft)		
Storage Lanes		
Taper Length (ft)		
Lane Util. Factor		
Frt		
Flt Protected		
Satd. Flow (prot)		
Flt Permitted		
Satd. Flow (perm)		
Right Turn on Red		
Satd. Flow (RTOR)		
Link Speed (mph)		
Link Distance (ft)		
Travel Time (s)		
Peak Hour Factor		
Heavy Vehicles (%)		
Adj. Flow (vph)		
Shared Lane Traffic (%)		
Lane Group Flow (vph)		
Enter Blocked Intersection		
Lane Alignment		
Median Width(ft)		
Link Offset(ft)		
Crosswalk Width(ft)		
Two way Left Turn Lane		
Headway Factor		
Turning Speed (mph)		
Number of Detectors		
Detector Template		
Leading Detector (ft)		
Trailing Detector (ft)		
Detector 1 Position(ft)		
Detector 1 Size(ft)		
Detector 1 Type		
Detector 1 Channel		
Detector 1 Extend (s)		
Detector 1 Queue (s)		
Detector 1 Delay (s)		
Detector 2 Position(ft)		
Detector 2 Size(ft)		
Detector 2 Type		
Detector 2 Channel		
Detector 2 Extend (s)		
Turn Type		
Protected Phases	6	8

DocuSign Envelope ID: 5C03745C-4B01-4834-A65D-B77F558A4F46

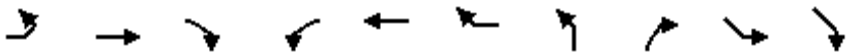

Lane Group	EBL	EBT	EBR	WBL	WBT	WBR	NBL	NBR	SEL	SER	Ø4	Ø5
Permitted Phases						Free						
Detector Phase		2			2 4 5 6			1				
Switch Phase												
Minimum Initial (s)		12.0						7.0			7.0	7.0
Minimum Split (s)		21.0						14.5			15.0	15.3
Total Split (s)		60.0						31.0			29.0	17.0
Total Split (%)		50.0%						25.8%			24%	14%
Maximum Green (s)		51.0						23.5			21.0	8.7
Yellow Time (s)		5.2						3.6			3.5	3.1
All-Red Time (s)		3.8						3.9			4.5	5.2
Lost Time Adjust (s)		0.0						0.0				
Total Lost Time (s)		9.0						7.5				
Lead/Lag		Lead						Lag				Lead
Lead-Lag Optimize?		Yes						Yes				Yes
Vehicle Extension (s)		6.0						2.0			2.0	2.0
Minimum Gap (s)		3.0						0.2			0.2	0.2
Time Before Reduce (s)		15.0						0.0			0.0	0.0
Time To Reduce (s)		30.0						0.0			0.0	0.0
Recall Mode		C-Max						None			None	None
Act Effct Green (s)		51.0			120.0	120.0		23.5				
Actuated g/C Ratio		0.42			1.00	1.00		0.20				
v/c Ratio		1.15			0.26	0.29		1.14				
Control Delay		93.8			0.1	0.4		126.7				
Queue Delay		0.1			0.0	0.0		0.0				
Total Delay		93.9			0.1	0.4		126.7				
LOS		F			A	A		F				
Approach Delay		93.9			0.2		126.7					
Approach LOS		F			A		F					
Queue Length 50th (ft)		~824			0	0		~312				
Queue Length 95th (ft)		m#807			0	0		#439				
Internal Link Dist (ft)		338			513		316		384			
Turn Bay Length (ft)						275						
Base Capacity (vph)		1475			3471	1442		535				
Starvation Cap Reductn		47			0	0		0				
Spillback Cap Reductn		21			0	0		0				
Storage Cap Reductn		0			0	0		0				
Reduced v/c Ratio		1.18			0.26	0.29		1.14				

Intersection Summary			
Area Type:	Other		
Cycle Length: 120			
Actuated Cycle Length: 120			
Offset: 0 (0%), Referenced to phase 2:EBT and 6:WBT, Start of Green, Master Intersection			
Natural Cycle: 140			
Control Type: Actuated-Coordinated			
Maximum v/c Ratio: 1.15			
Intersection Signal Delay: 65.2		Intersection LOS: E	
Intersection Capacity Utilization 75.0%		ICU Level of Service D	
Analysis Period (min) 15			

DocuSign Envelope ID: 5C03745C-4B01-4834-A65D-B77F558A4F46

Lane Group	Ø6	Ø8
Permitted Phases		
Detector Phase		
Switch Phase		
Minimum Initial (s)	12.0	7.0
Minimum Split (s)	21.0	15.0
Total Split (s)	74.0	29.0
Total Split (%)	62%	24%
Maximum Green (s)	65.0	21.0
Yellow Time (s)	5.2	3.5
All-Red Time (s)	3.8	4.5
Lost Time Adjust (s)		
Total Lost Time (s)		
Lead/Lag	Lag	
Lead-Lag Optimize?	Yes	
Vehicle Extension (s)	6.0	2.0
Minimum Gap (s)	3.0	0.2
Time Before Reduce (s)	15.0	0.0
Time To Reduce (s)	30.0	0.0
Recall Mode	C-Max	None
Act Effct Green (s)		
Actuated g/C Ratio		
v/c Ratio		
Control Delay		
Queue Delay		
Total Delay		
LOS		
Approach Delay		
Approach LOS		
Queue Length 50th (ft)		
Queue Length 95th (ft)		
Internal Link Dist (ft)		
Turn Bay Length (ft)		
Base Capacity (vph)		
Starvation Cap Reductn		
Spillback Cap Reductn		
Storage Cap Reductn		
Reduced v/c Ratio		

Intersection Summary

DocuSign Envelope ID: 5C03745C-4B01-4834-A65D-B77F558A4F46

~ Volume exceeds capacity, queue is theoretically infinite.
Queue shown is maximum after two cycles.
95th percentile volume exceeds capacity, queue may be longer.
Queue shown is maximum after two cycles.
m Volume for 95th percentile queue is metered by upstream signal.

Splits and Phases: 11: I-26 NWB Ramp & NC 146 (Long Shoals Rd)

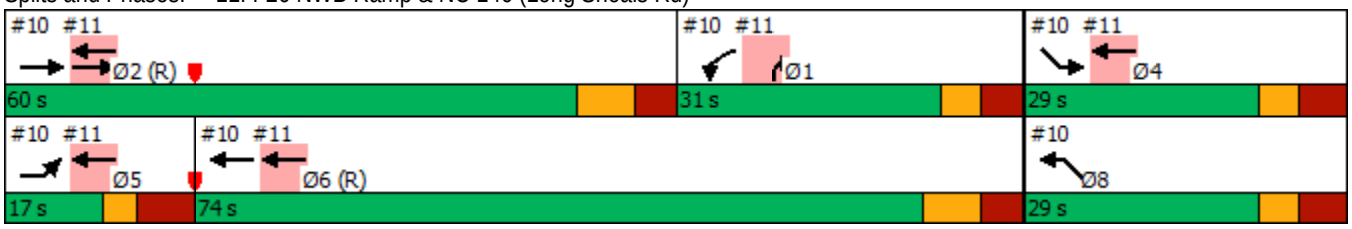

DocuSign Envelope ID: 5C03745C-4B01-4834-A65D-B77F558A4F46

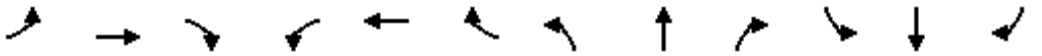

Lane Group	EBL	EBT	EBR	WBL	WBT	WBR	NBL	NBT	NBR	SBL	SBT	SBR
Lane Configurations												
Traffic Volume (vph)	462	1487	122	20	893	220	45	15	12	198	23	255
Future Volume (vph)	462	1487	122	20	893	220	45	15	12	198	23	255
Ideal Flow (vphpl)	1900	1900	1900	1900	1900	1900	1900	1900	1900	1900	1900	1900
Grade (%)		6%			-6%			11%			7%	
Storage Length (ft)	350		400	250		225	0		0	450		0
Storage Lanes	2		1	1		1	0		0	1		1
Taper Length (ft)	25			25			25			25		
Lane Util. Factor	0.97	0.95	1.00	1.00	0.95	1.00	1.00	1.00	1.00	0.95	0.95	1.00
Frt			0.850			0.850		0.978				0.850
Flt Protected	0.950			0.950				0.970		0.950	0.962	
Satd. Flow (prot)	3266	3367	1506	1788	3575	1599	0	1622	0	1561	1581	1470
Flt Permitted	0.950			0.064				0.970		0.950	0.962	
Satd. Flow (perm)	3266	3367	1506	120	3575	1599	0	1622	0	1561	1581	1470
Right Turn on Red			No			No			No			No
Satd. Flow (RTOR)												
Link Speed (mph)		45			45			25			25	
Link Distance (ft)		593			1582			722			992	
Travel Time (s)		9.0			24.0			19.7			27.1	
Peak Hour Factor	0.90	0.90	0.90	0.90	0.90	0.90	0.90	0.90	0.90	0.90	0.90	0.90
Heavy Vehicles (%)	4%	4%	4%	4%	4%	4%	5%	5%	5%	6%	6%	6%
Adj. Flow (vph)	513	1652	136	22	992	244	50	17	13	220	26	283
Shared Lane Traffic (%)										44%		
Lane Group Flow (vph)	513	1652	136	22	992	244	0	80	0	123	123	283
Enter Blocked Intersection	No	No	No	No	No	No	No	No	No	No	No	No
Lane Alignment	Left	Left	Right	Left	Left	Right	Left	Left	Right	Left	Left	Right
Median Width(ft)		24			24			0			12	
Link Offset(ft)		0			0			0			0	
Crosswalk Width(ft)		16			16			16			16	
Two way Left Turn Lane												
Headway Factor	1.04	1.04	1.04	0.96	0.96	0.96	1.08	1.08	1.08	1.05	1.05	1.05
Turning Speed (mph)	15		9	15		9	15		9	15		9
Number of Detectors	1	2	1	1	2	1	1	2		1	2	1
Detector Template	Left	Thru	Right	Left	Thru	Right	Left	Thru		Left	Thru	Right
Leading Detector (ft)	20	100	20	20	100	20	20	100		20	100	20
Trailing Detector (ft)	0	0	0	0	0	0	0	0		0	0	0
Detector 1 Position(ft)	0	0	0	0	0	0	0	0		0	0	0
Detector 1 Size(ft)	20	6	20	20	6	20	20	6		20	6	20
Detector 1 Type	Cl+Ex	Cl+Ex	Cl+Ex	Cl+Ex	Cl+Ex	Cl+Ex	Cl+Ex	Cl+Ex		Cl+Ex	Cl+Ex	Cl+Ex
Detector 1 Channel												
Detector 1 Extend (s)	0.0	0.0	0.0	0.0	0.0	0.0	0.0	0.0		0.0	0.0	0.0
Detector 1 Queue (s)	0.0	0.0	0.0	0.0	0.0	0.0	0.0	0.0		0.0	0.0	0.0
Detector 1 Delay (s)	0.0	0.0	0.0	0.0	0.0	0.0	0.0	0.0		0.0	0.0	0.0
Detector 2 Position(ft)		94			94			94			94	
Detector 2 Size(ft)		6			6			6			6	
Detector 2 Type		Cl+Ex			Cl+Ex			Cl+Ex			Cl+Ex	
Detector 2 Channel												
Detector 2 Extend (s)		0.0			0.0			0.0			0.0	
Turn Type	Prot	NA	pm+ov	D.P+P	NA	pm+ov	Split	NA		Split	NA	pm+ov

DocuSign Envelope ID: 5C03745C-4B01-4834-A65D-B77F558A4F46

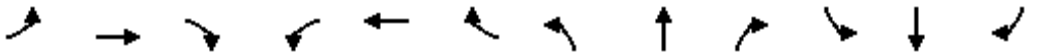

Lane Group	EBL	EBT	EBR	WBL	WBT	WBR	NBL	NBT	NBR	SBL	SBT	SBR
Protected Phases	5	2	4	1	6	3	4	4		3	3	5
Permitted Phases			2	2		6						3
Detector Phase	5	2	4	1	6	3	4	4		3	3	5
Switch Phase												
Minimum Initial (s)	7.0	12.0	7.0	7.0	12.0	7.0	7.0	7.0		7.0	7.0	7.0
Minimum Split (s)	13.3	20.7	39.3	13.3	32.6	13.4	39.3	39.3		13.4	13.4	13.3
Total Split (s)	32.0	72.0	15.0	14.0	54.0	19.0	15.0	15.0		19.0	19.0	32.0
Total Split (%)	26.7%	60.0%	12.5%	11.7%	45.0%	15.8%	12.5%	12.5%		15.8%	15.8%	26.7%
Maximum Green (s)	25.7	66.3	8.7	7.7	47.4	12.6	8.7	8.7		12.6	12.6	25.7
Yellow Time (s)	3.0	4.1	3.0	3.1	5.1	3.0	3.0	3.0		3.0	3.0	3.0
All-Red Time (s)	3.3	1.6	3.3	3.2	1.5	3.4	3.3	3.3		3.4	3.4	3.3
Lost Time Adjust (s)	-1.3	-0.7	-1.3	-1.3	-1.6	-1.4		-1.3		-1.4	-1.4	-1.3
Total Lost Time (s)	5.0	5.0	5.0	5.0	5.0	5.0		5.0		5.0	5.0	5.0
Lead/Lag	Lead	Lead	Lead	Lag	Lag	Lag	Lead	Lead		Lag	Lag	Lead
Lead-Lag Optimize?												
Vehicle Extension (s)	3.0	6.0	3.0	2.0	6.0	3.0	3.0	3.0		3.0	3.0	3.0
Minimum Gap (s)	0.2	3.0	0.2	0.2	3.0	0.2	0.2	0.2		0.2	0.2	0.2
Time Before Reduce (s)	0.0	20.0	0.0	0.0	20.0	0.0	0.0	0.0		0.0	0.0	0.0
Time To Reduce (s)	0.0	30.0	0.0	0.0	30.0	0.0	0.0	0.0		0.0	0.0	0.0
Recall Mode	None	C-Max	None	None	C-Max	None	None	None		None	None	None
Walk Time (s)		7.0	7.0		7.0		7.0	7.0				
Flash Dont Walk (s)		8.0	26.0		19.0		26.0	26.0				
Pedestrian Calls (#/hr)		0	0		0		0	0				
Act Effct Green (s)	24.5	73.6	85.3	79.0	52.5	65.8		9.7		13.3	13.3	42.8
Actuated g/C Ratio	0.20	0.61	0.71	0.66	0.44	0.55		0.08		0.11	0.11	0.36
v/c Ratio	0.77	0.80	0.13	0.11	0.63	0.28		0.62		0.71	0.70	0.54
Control Delay	61.9	10.2	1.4	11.1	29.3	9.1		73.6		73.8	72.9	34.5
Queue Delay	0.0	0.9	0.0	0.0	0.0	0.0		0.0		0.0	0.0	0.0
Total Delay	61.9	11.1	1.4	11.1	29.3	9.1		73.6		73.8	72.9	34.5
LOS	E	B	A	B	C	A		E		E	E	C
Approach Delay		21.8			25.1			73.6			52.5	
Approach LOS		C			C			E			D	
Queue Length 50th (ft)	188	192	6	5	321	60		61		97	97	168
Queue Length 95th (ft)	m161	m167	m5	14	401	95		#125		#186	#184	253
Internal Link Dist (ft)		513			1502			642			912	
Turn Bay Length (ft)	350		400	250		225				450		
Base Capacity (vph)	734	2065	1074	204	1564	886		135		182	184	555
Starvation Cap Reductn	0	176	0	0	0	0		0		0	0	0
Spillback Cap Reductn	0	0	0	0	0	0		0		0	0	0
Storage Cap Reductn	0	0	0	0	0	0		0		0	0	0
Reduced v/c Ratio	0.70	0.87	0.13	0.11	0.63	0.28		0.59		0.68	0.67	0.51

Intersection Summary	
Area Type:	Other
Cycle Length: 120	
Actuated Cycle Length: 120	
Offset: 8 (7%), Referenced to phase 2:EBWB and 6:WBT, Start of Green	
Natural Cycle: 140	
Control Type: Actuated-Coordinated	

DocuSign Envelope ID: 5C03745C-4B01-4834-A65D-B77F558A4F46

Maximum v/c Ratio: 0.80	
Intersection Signal Delay: 27.7	Intersection LOS: C
Intersection Capacity Utilization 70.1%	ICU Level of Service C
Analysis Period (min) 15	

\# 95th percentile volume exceeds capacity, queue may be longer.
Queue shown is maximum after two cycles.
m Volume for 95th percentile queue is metered by upstream signal.

Splits and Phases: 12: Skyland Inn Dr/Schenck Pkwy & NC 146 (Long Shoals Rd)

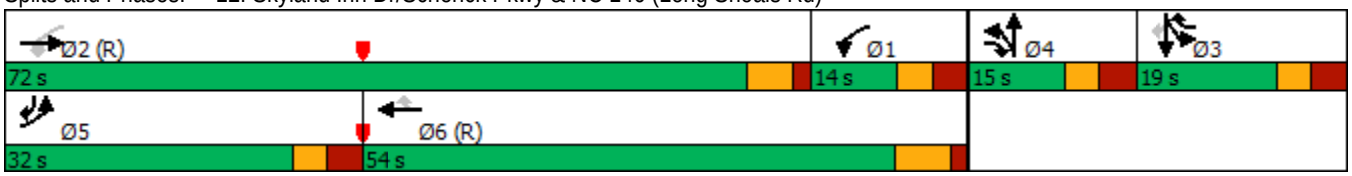

DocuSign Envelope ID: 5C03745C-4B01-4834-A65D-B77F558A4F46

2021 Existing PM

DocuSign Envelope ID: 5C03745C-4B01-4834-A65D-B77F558A4F46

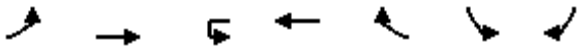

Lane Group	EBL	EBT	WBU	WBT	WBR	SBL	SBR
Lane Configurations							
Traffic Volume (vph)	73	1344	0	1096	84	84	59
Future Volume (vph)	73	1344	0	1096	84	84	59
Ideal Flow (vphpl)	1900	1900	1900	1900	1900	1900	1900
Storage Length (ft)	150		150		175	0	175
Storage Lanes	1		1		1	1	1
Taper Length (ft)	25		25			25	
Lane Util. Factor	1.00	0.95	1.00	0.95	1.00	1.00	1.00
Frt					0.850		0.850
Flt Protected	0.950					0.950	
Satd. Flow (prot)	1703	3406	1792	3406	1524	1703	1524
Flt Permitted	0.198					0.950	
Satd. Flow (perm)	355	3406	1792	3406	1524	1703	1524
Right Turn on Red					No		No
Satd. Flow (RTOR)							
Link Speed (mph)		45		45		25	
Link Distance (ft)		1606		558		1108	
Travel Time (s)		24.3		8.5		30.2	
Peak Hour Factor	0.90	0.90	0.90	0.90	0.90	0.90	0.90
Heavy Vehicles (%)	6%	6%	6%	6%	6%	6%	6%
Adj. Flow (vph)	81	1493	0	1218	93	93	66
Shared Lane Traffic (%)							
Lane Group Flow (vph)	81	1493	0	1218	93	93	66
Enter Blocked Intersection	No	No	No	No	No	No	No
Lane Alignment	Left	Left	R NA	Left	Right	Left	Right
Median Width(ft)		12		12		12	
Link Offset(ft)		0		0		0	
Crosswalk Width(ft)		16		16		16	
Two way Left Turn Lane							
Headway Factor	1.00	1.00	1.00	1.00	1.00	1.00	1.00
Turning Speed (mph)	15		9		9	15	9
Number of Detectors	1	2	1	2	1	1	1
Detector Template	Left	Thru	Left	Thru	Right	Left	Right
Leading Detector (ft)	20	100	20	100	20	20	20
Trailing Detector (ft)	0	0	0	0	0	0	0
Detector 1 Position(ft)	0	0	0	0	0	0	0
Detector 1 Size(ft)	20	6	20	6	20	20	20
Detector 1 Type	Cl+Ex	Cl+Ex	Cl+Ex	Cl+Ex	Cl+Ex	Cl+Ex	Cl+Ex
Detector 1 Channel							
Detector 1 Extend (s)	0.0	0.0	0.0	0.0	0.0	0.0	0.0
Detector 1 Queue (s)	0.0	0.0	0.0	0.0	0.0	0.0	0.0
Detector 1 Delay (s)	0.0	0.0	0.0	0.0	0.0	0.0	0.0
Detector 2 Position(ft)		94		94			
Detector 2 Size(ft)		6		6			
Detector 2 Type		Cl+Ex		Cl+Ex			
Detector 2 Channel							
Detector 2 Extend (s)		0.0		0.0			
Turn Type	D.P+P	NA	D.P+P	NA	pm+ov	Prot	pm+ov
Protected Phases	5	2	1	6	4	4	5

DocuSign Envelope ID: 5C03745C-4B01-4834-A65D-B77F558A4F46

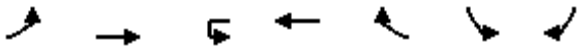

Lane Group	EBL	EBT	WBU	WBT	WBR	SBL	SBR
Permitted Phases	6		2		6		4
Detector Phase	5	2	1	6	4	4	5
Switch Phase							
Minimum Initial (s)	7.0	12.0	7.0	12.0	7.0	7.0	7.0
Minimum Split (s)	13.1	18.8	11.9	35.8	36.5	36.5	13.1
Total Split (s)	24.0	98.0	24.0	98.0	28.0	28.0	24.0
Total Split (%)	16.0%	65.3%	16.0%	65.3%	18.7%	18.7%	16.0%
Maximum Green (s)	17.9	91.2	19.1	91.2	21.5	21.5	17.9
Yellow Time (s)	3.0	4.9	3.0	4.9	3.0	3.0	3.0
All-Red Time (s)	3.1	1.9	1.9	1.9	3.5	3.5	3.1
Lost Time Adjust (s)	-1.1	-1.8	0.1	-1.8	-1.8	-1.5	-1.1
Total Lost Time (s)	5.0	5.0	5.0	5.0	4.7	5.0	5.0
Lead/Lag	Lead	Lag	Lead	Lag			Lead
Lead-Lag Optimize?	Yes	Yes	Yes	Yes			Yes
Vehicle Extension (s)	2.0	6.0	2.0	6.0	2.0	2.0	2.0
Minimum Gap (s)	0.2	3.0	0.2	3.0	0.2	0.2	0.2
Time Before Reduce (s)	0.0	15.0	0.0	15.0	0.0	0.0	0.0
Time To Reduce (s)	0.0	30.0	0.0	30.0	0.0	0.0	0.0
Recall Mode	None	C-Max	None	C-Max	None	None	None
Walk Time (s)				7.0	7.0	7.0	
Flash Dont Walk (s)				22.0	23.0	23.0	
Pedestrian Calls (#/hr)				0	0	0	
Act Effct Green (s)	120.9	125.9		112.8	132.2	14.1	27.2
Actuated g/C Ratio	0.81	0.84		0.75	0.88	0.09	0.18
v/c Ratio	0.23	0.52		0.48	0.07	0.58	0.24
Control Delay	4.0	4.5		7.9	2.4	79.0	53.6
Queue Delay	0.0	0.1		0.2	0.0	0.0	0.0
Total Delay	4.0	4.5		8.1	2.4	79.0	53.6
LOS	A	A		A	A	E	D
Approach Delay		4.5		7.7		68.5	
Approach LOS		A		A		E	
Queue Length 50th (ft)	11	176		255	17	89	56
Queue Length 95th (ft)	25	265		282	30	147	99
Internal Link Dist (ft)		1526		478		1028	
Turn Bay Length (ft)	150				175		175
Base Capacity (vph)	468	2859		2562	1433	261	386
Starvation Cap Reductn	0	0		536	0	0	0
Spillback Cap Reductn	0	239		0	0	0	0
Storage Cap Reductn	0	0		0	0	0	0
Reduced v/c Ratio	0.17	0.57		0.60	0.06	0.36	0.17

Intersection Summary	
Area Type:	Other
Cycle Length: 150	
Actuated Cycle Length: 150	
Offset: 2 (1%), Referenced to phase 2:EBWB and 6:EBWB, Start of Green	
Natural Cycle: 90	
Control Type: Actuated-Coordinated	
Maximum v/c Ratio: 0.58	

DocuSign Envelope ID: 5C03745C-4B01-4834-A65D-B77F558A4F46

Intersection Signal Delay: 9.2	Intersection LOS: A
Intersection Capacity Utilization 61.3%	ICU Level of Service B
Analysis Period (min) 15	

Splits and Phases: 1: NC 191 (Brevard Rd) & Commercial Access

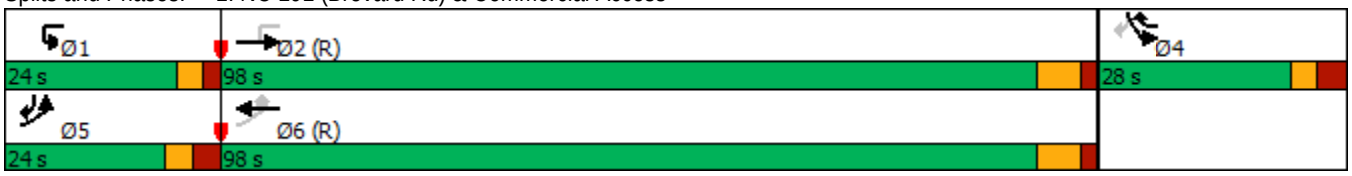

DocuSign Envelope ID: 5C03745C-4B01-4834-A65D-B77F558A4F46

Lane Group	EBT	EBR	WBL	WBT	NBL	NBR
Lane Configurations						
Traffic Volume (vph)	1160	268	152	794	386	42
Future Volume (vph)	1160	268	152	794	386	42
Ideal Flow (vphpl)	1900	1900	1900	1900	1900	1900
Grade (%)	-1%			-1%	0%	
Storage Length (ft)		225	200		0	0
Storage Lanes		1	1		2	1
Taper Length (ft)			25		25	
Lane Util. Factor	0.95	1.00	1.00	0.95	0.97	1.00
Frt		0.850				0.850
Flt Protected			0.950		0.950	
Satd. Flow (prot)	3423	1449	1620	3423	3303	1524
Flt Permitted			0.133		0.950	
Satd. Flow (perm)	3423	1449	227	3423	3303	1524
Right Turn on Red		No				Yes
Satd. Flow (RTOR)						11
Link Speed (mph)	45			45	45	
Link Distance (ft)	558			1204	323	
Travel Time (s)	8.5			18.2	4.9	
Peak Hour Factor	0.90	0.90	0.90	0.90	0.90	0.90
Heavy Vehicles (%)	6%	12%	12%	6%	6%	6%
Adj. Flow (vph)	1289	298	169	882	429	47
Shared Lane Traffic (%)						
Lane Group Flow (vph)	1289	298	169	882	429	47
Enter Blocked Intersection	No	No	No	No	No	No
Lane Alignment	Left	Right	Left	Left	Left	Right
Median Width(ft)	12			12	40	
Link Offset(ft)	0			0	0	
Crosswalk Width(ft)	16			16	16	
Two way Left Turn Lane						
Headway Factor	0.99	0.99	0.99	0.99	1.00	1.00
Turning Speed (mph)		9	15		15	9
Number of Detectors	2	1	1	2	1	1
Detector Template	Thru	Right	Left	Thru	Left	Right
Leading Detector (ft)	100	20	20	100	20	20
Trailing Detector (ft)	0	0	0	0	0	0
Detector 1 Position(ft)	0	0	0	0	0	0
Detector 1 Size(ft)	6	20	20	6	20	20
Detector 1 Type	Cl+Ex	Cl+Ex	Cl+Ex	Cl+Ex	Cl+Ex	Cl+Ex
Detector 1 Channel						
Detector 1 Extend (s)	0.0	0.0	0.0	0.0	0.0	0.0
Detector 1 Queue (s)	0.0	0.0	0.0	0.0	0.0	0.0
Detector 1 Delay (s)	0.0	0.0	0.0	0.0	0.0	0.0
Detector 2 Position(ft)	94			94		
Detector 2 Size(ft)	6			6		
Detector 2 Type	Cl+Ex			Cl+Ex		
Detector 2 Channel						
Detector 2 Extend (s)	0.0			0.0		
Turn Type	NA	pm+ov	D.P+P	NA	Prot	pm+ov

DocuSign Envelope ID: 5C03745C-4B01-4834-A65D-B77F558A4F46



Lane Group	EBT	EBR	WBL	WBT	NBL	NBR
Protected Phases	2	4	1	6	4	1
Permitted Phases		2	2			4
Detector Phase	2	4	1	6	4	1
Switch Phase						
Minimum Initial (s)	12.0	7.0	10.0	12.0	7.0	10.0
Minimum Split (s)	18.0	13.9	16.3	18.6	13.9	16.3
Total Split (s)	63.0	52.0	35.0	98.0	52.0	35.0
Total Split (%)	42.0%	34.7%	23.3%	65.3%	34.7%	23.3%
Maximum Green (s)	57.0	45.1	28.7	91.4	45.1	28.7
Yellow Time (s)	4.4	3.0	3.0	4.7	3.0	3.0
All-Red Time (s)	1.6	3.9	3.3	1.9	3.9	3.3
Lost Time Adjust (s)	-1.0	-1.9	-1.3	-1.6	-1.9	-1.9
Total Lost Time (s)	5.0	5.0	5.0	5.0	5.0	4.4
Lead/Lag	Lag		Lead			Lead
Lead-Lag Optimize?	Yes		Yes			Yes
Vehicle Extension (s)	6.0	5.0	2.5	6.0	5.0	2.5
Minimum Gap (s)	3.0	0.2	0.2	3.0	0.2	0.2
Time Before Reduce (s)	15.0	0.0	0.0	15.0	0.0	0.0
Time To Reduce (s)	30.0	0.0	0.0	30.0	0.0	0.0
Recall Mode	C-Max	None	None	C-Max	None	None
Act Effct Green (s)	86.8	122.2	104.6	109.6	30.4	53.8
Actuated g/C Ratio	0.58	0.81	0.70	0.73	0.20	0.36
v/c Ratio	0.65	0.25	0.52	0.35	0.64	0.08
Control Delay	25.1	6.3	48.1	6.8	58.9	22.3
Queue Delay	0.3	0.0	0.0	0.0	0.0	0.0
Total Delay	25.4	6.3	48.1	6.8	58.9	22.3
LOS	C	A	D	A	E	C
Approach Delay	21.8			13.4	55.2	
Approach LOS	C			B	E	
Queue Length 50th (ft)	459	74	81	124	200	23
Queue Length 95th (ft)	654	156	163	148	243	45
Internal Link Dist (ft)	478			1124	243	
Turn Bay Length (ft)		225	200			
Base Capacity (vph)	1979	1336	444	2500	1034	676
Starvation Cap Reductn	191	0	0	0	0	0
Spillback Cap Reductn	0	0	0	0	0	0
Storage Cap Reductn	0	0	0	0	0	0
Reduced v/c Ratio	0.72	0.22	0.38	0.35	0.41	0.07

Intersection Summary			
Area Type:	Other		
Cycle Length: 150			
Actuated Cycle Length: 150			
Offset: 46 (31%), Referenced to phase 2:EBWB and 6:WBT, Start of Green			
Natural Cycle: 65			
Control Type: Actuated-Coordinated			
Maximum v/c Ratio: 0.65			
Intersection Signal Delay: 24.1		Intersection LOS: C	
Intersection Capacity Utilization 64.0%		ICU Level of Service B	

DocuSign Envelope ID: 5C03745C-4B01-4834-A65D-B77F558A4F46

Analysis Period (min) 15

Splits and Phases: 2: I-26 SEB Ramps & NC 191 (Brevard Rd)

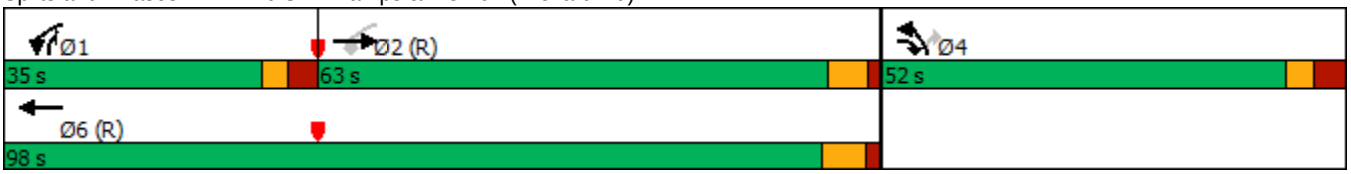

DocuSign Envelope ID: 5C03745C-4B01-4834-A65D-B77F558A4F46

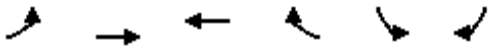

Lane Group	EBL	EBT	WBT	WBR	SBL	SBR
Lane Configurations						
Traffic Volume (vph)	422	780	726	36	160	220
Future Volume (vph)	422	780	726	36	160	220
Ideal Flow (vphpl)	1900	1900	1900	1900	1900	1900
Grade (%)		2%	-2%		2%	
Storage Length (ft)	625			200	0	400
Storage Lanes	2			1	2	1
Taper Length (ft)	25				25	
Lane Util. Factor	0.97	0.95	0.95	1.00	0.97	1.00
Frt				0.850		0.850
Flt Protected	0.950				0.950	
Satd. Flow (prot)	3095	3340	3408	1456	3240	1494
Flt Permitted	0.950				0.950	
Satd. Flow (perm)	3095	3340	3408	1456	3240	1494
Right Turn on Red				No		No
Satd. Flow (RTOR)						
Link Speed (mph)		45	45		45	
Link Distance (ft)		802	1565		860	
Travel Time (s)		12.2	23.7		13.0	
Peak Hour Factor	0.90	0.90	0.90	0.90	0.90	0.90
Heavy Vehicles (%)	12%	7%	7%	12%	7%	7%
Adj. Flow (vph)	469	867	807	40	178	244
Shared Lane Traffic (%)						
Lane Group Flow (vph)	469	867	807	40	178	244
Enter Blocked Intersection	No	No	No	No	No	No
Lane Alignment	Left	Left	Left	Right	Left	Right
Median Width(ft)		24	12		36	
Link Offset(ft)		0	0		0	
Crosswalk Width(ft)		16	16		16	
Two way Left Turn Lane						
Headway Factor	1.01	1.01	0.99	0.99	1.01	1.01
Turning Speed (mph)	15			9	15	9
Number of Detectors	1	2	2	1	1	1
Detector Template	Left	Thru	Thru	Right	Left	Right
Leading Detector (ft)	20	100	100	20	20	20
Trailing Detector (ft)	0	0	0	0	0	0
Detector 1 Position(ft)	0	0	0	0	0	0
Detector 1 Size(ft)	20	6	6	20	20	20
Detector 1 Type	Cl+Ex	Cl+Ex	Cl+Ex	Cl+Ex	Cl+Ex	Cl+Ex
Detector 1 Channel						
Detector 1 Extend (s)	0.0	0.0	0.0	0.0	0.0	0.0
Detector 1 Queue (s)	0.0	0.0	0.0	0.0	0.0	0.0
Detector 1 Delay (s)	0.0	0.0	0.0	0.0	0.0	0.0
Detector 2 Position(ft)		94	94			
Detector 2 Size(ft)		6	6			
Detector 2 Type		Cl+Ex	Cl+Ex			
Detector 2 Channel						
Detector 2 Extend (s)		0.0	0.0			
Turn Type	Prot	NA	NA	pm+ov	Prot	pm+ov

DocuSign Envelope ID: 5C03745C-4B01-4834-A65D-B77F558A4F46

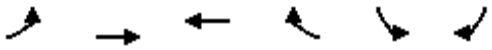

Lane Group	EBL	EBT	WBT	WBR	SBL	SBR
Protected Phases	5	2	6	4	4	5
Permitted Phases				6		4
Detector Phase	5	2	6	4	4	5
Switch Phase						
Minimum Initial (s)	7.0	12.0	12.0	7.0	7.0	7.0
Minimum Split (s)	14.0	19.0	25.0	25.0	25.0	14.0
Total Split (s)	50.0	120.0	70.0	30.0	30.0	50.0
Total Split (%)	33.3%	80.0%	46.7%	20.0%	20.0%	33.3%
Maximum Green (s)	43.0	113.0	63.0	23.0	23.0	43.0
Yellow Time (s)	5.0	5.0	5.0	5.0	5.0	5.0
All-Red Time (s)	2.0	2.0	2.0	2.0	2.0	2.0
Lost Time Adjust (s)	-2.0	-2.0	-2.0	-2.0	-2.0	-2.0
Total Lost Time (s)	5.0	5.0	5.0	5.0	5.0	5.0
Lead/Lag	Lag		Lead			Lag
Lead-Lag Optimize?	Yes		Yes			Yes
Vehicle Extension (s)	3.0	3.0	3.0	3.0	3.0	3.0
Minimum Gap (s)	0.2	3.0	3.0	0.2	0.2	0.2
Time Before Reduce (s)	0.0	15.0	15.0	0.0	0.0	0.0
Time To Reduce (s)	0.0	30.0	30.0	0.0	0.0	0.0
Recall Mode	None	C-Max	C-Max	None	None	None
Walk Time (s)			7.0	7.0	7.0	
Flash Dont Walk (s)			11.0	11.0	11.0	
Pedestrian Calls (#/hr)			0	0	0	
Act Effct Green (s)	45.0	124.4	74.4	95.0	15.6	65.6
Actuated g/C Ratio	0.30	0.83	0.50	0.63	0.10	0.44
v/c Ratio	0.51	0.31	0.48	0.04	0.53	0.37
Control Delay	21.2	0.8	26.5	10.6	69.2	30.0
Queue Delay	0.0	0.0	0.0	0.0	0.0	0.0
Total Delay	21.2	0.8	26.5	10.6	69.2	30.0
LOS	C	A	C	B	E	C
Approach Delay		8.0	25.7		46.5	
Approach LOS		A	C		D	
Queue Length 50th (ft)	200	15	268	14	86	159
Queue Length 95th (ft)	170	18	344	30	124	222
Internal Link Dist (ft)		722	1485		780	
Turn Bay Length (ft)	625			200		400
Base Capacity (vph)	928	2770	1691	922	540	653
Starvation Cap Reductn	0	0	0	0	0	0
Spillback Cap Reductn	0	0	0	0	0	0
Storage Cap Reductn	0	0	0	0	0	0
Reduced v/c Ratio	0.51	0.31	0.48	0.04	0.33	0.37

Intersection Summary	
Area Type:	Other
Cycle Length: 150	
Actuated Cycle Length: 150	
Offset: 19 (13%), Referenced to phase 2:EBT and 6:WBT, Start of Green	
Natural Cycle: 65	
Control Type: Actuated-Coordinated	

DocuSign Envelope ID: 5C03745C-4B01-4834-A65D-B77F558A4F46

Maximum v/c Ratio: 0.53	
Intersection Signal Delay: 20.0	Intersection LOS: B
Intersection Capacity Utilization 50.4%	ICU Level of Service A
Analysis Period (min) 15	

Splits and Phases: 3: NC 191 (Brevard Rd) & I-26 NWB Ramps

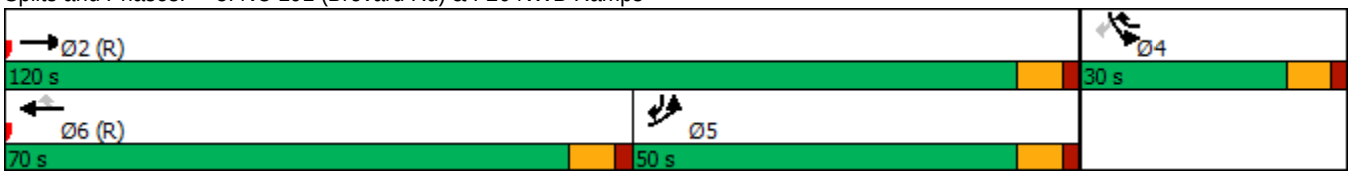

DocuSign Envelope ID: 5C03745C-4B01-4834-A65D-B77F558A4F46

Intersection	
Int Delay, s/veh	2.4

Movement	EBL	EBR	NBL	NBT	SBT	SBR
Lane Configurations						
Traffic Vol, veh/h	72	16	13	178	129	43
Future Vol, veh/h	72	16	13	178	129	43
Conflicting Peds, #/hr	0	0	0	0	0	0
Sign Control	Stop	Stop	Free	Free	Free	Free
RT Channelized	-	None	-	None	-	None
Storage Length	75	0	275	-	-	-
Veh in Median Storage, #	0	-	-	0	0	-
Grade, %	0	-	-	0	3	-
Peak Hour Factor	90	90	90	90	90	90
Heavy Vehicles, %	2	2	2	2	2	2
Mvmt Flow	80	18	14	198	143	48

Major/Minor	Minor2		Major1		Major2	
Conflicting Flow All	393	167	191	0	-	0
Stage 1	167	-	-	-	-	-
Stage 2	226	-	-	-	-	-
Critical Hdwy	6.42	6.22	4.12	-	-	-
Critical Hdwy Stg 1	5.42	-	-	-	-	-
Critical Hdwy Stg 2	5.42	-	-	-	-	-
Follow-up Hdwy	3.518	3.318	2.218	-	-	-
Pot Cap-1 Maneuver	611	877	1383	-	-	-
Stage 1	863	-	-	-	-	-
Stage 2	812	-	-	-	-	-
Platoon blocked, %				-	-	-
Mov Cap-1 Maneuver	605	877	1383	-	-	-
Mov Cap-2 Maneuver	605	-	-	-	-	-
Stage 1	854	-	-	-	-	-
Stage 2	812	-	-	-	-	-

Approach	EB	NB	SB
HCM Control Delay, s	11.4	0.5	0
HCM LOS	B		

Minor Lane/Major Mvmt	NBL	NBT	EBLn1	EBLn2	SBT	SBR
Capacity (veh/h)	1383	-	605	877	-	-
HCM Lane V/C Ratio	0.01	-	0.132	0.02	-	-
HCM Control Delay (s)	7.6	-	11.9	9.2	-	-
HCM Lane LOS	A	-	B	A	-	-
HCM 95th %tile Q(veh)	0	-	0.5	0.1	-	-

DocuSign Envelope ID: 5C03745C-4B01-4834-A65D-B77F558A4F46

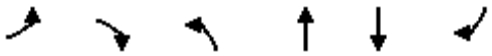

Lane Group	EBL	EBR	NBL	NBT	SBT	SBR
Lane Configurations						
Traffic Volume (vph)	176	74	63	905	662	109
Future Volume (vph)	176	74	63	905	662	109
Ideal Flow (vphpl)	1900	1900	1900	1900	1900	1900
Grade (%)	3%			2%	-7%	
Storage Length (ft)	0	0	150			0
Storage Lanes	1	1	1			1
Taper Length (ft)	25		25			
Lane Util. Factor	1.00	1.00	1.00	1.00	1.00	1.00
Frt		0.850				0.850
Flt Protected	0.950		0.950			
Satd. Flow (prot)	1743	1560	1686	1775	1873	1592
Flt Permitted	0.950		0.296			
Satd. Flow (perm)	1743	1560	525	1775	1873	1592
Right Turn on Red		No				Yes
Satd. Flow (RTOR)						43
Link Speed (mph)	35			45	45	
Link Distance (ft)	248			1589	1600	
Travel Time (s)	4.8			24.1	24.2	
Peak Hour Factor	0.90	0.90	0.90	0.90	0.90	0.90
Heavy Vehicles (%)	2%	2%	6%	6%	5%	5%
Adj. Flow (vph)	196	82	70	1006	736	121
Shared Lane Traffic (%)						
Lane Group Flow (vph)	196	82	70	1006	736	121
Enter Blocked Intersection	No	No	No	No	No	No
Lane Alignment	L NA	Right	Left	L NA	Left	Right
Median Width(ft)	12			12	7	
Link Offset(ft)	0			0	0	
Crosswalk Width(ft)	16			16	16	
Two way Left Turn Lane						
Headway Factor	1.02	1.02	1.01	1.01	0.96	0.96
Turning Speed (mph)	15	9	15			9
Number of Detectors	1	1	1	2	2	1
Detector Template	Left	Right	Left	Thru	Thru	Right
Leading Detector (ft)	20	20	20	100	100	20
Trailing Detector (ft)	0	0	0	0	0	0
Detector 1 Position(ft)	0	0	0	0	0	0
Detector 1 Size(ft)	20	20	20	6	6	20
Detector 1 Type	Cl+Ex	Cl+Ex	Cl+Ex	Cl+Ex	Cl+Ex	Cl+Ex
Detector 1 Channel						
Detector 1 Extend (s)	0.0	0.0	0.0	0.0	0.0	0.0
Detector 1 Queue (s)	0.0	0.0	0.0	0.0	0.0	0.0
Detector 1 Delay (s)	0.0	0.0	0.0	0.0	0.0	0.0
Detector 2 Position(ft)				94	94	
Detector 2 Size(ft)				6	6	
Detector 2 Type				Cl+Ex	Cl+Ex	
Detector 2 Channel						
Detector 2 Extend (s)				0.0	0.0	
Turn Type	Prot	pm+ov	D.P+P	NA	NA	Free

DocuSign Envelope ID: 5C03745C-4B01-4834-A65D-B77F558A4F46

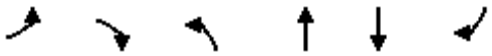

Lane Group	EBL	EBR	NBL	NBT	SBT	SBR
Protected Phases	4	5	5	2	6	
Permitted Phases		4	6			Free
Detector Phase	4	5	5	2	6	
Switch Phase						
Minimum Initial (s)	7.0	7.0	7.0	12.0	12.0	
Minimum Split (s)	12.3	11.4	11.4	18.4	18.4	
Total Split (s)	30.0	25.0	25.0	120.0	95.0	
Total Split (%)	20.0%	16.7%	16.7%	80.0%	63.3%	
Maximum Green (s)	24.7	20.6	20.6	113.6	88.6	
Yellow Time (s)	3.0	3.0	3.0	5.2	5.2	
All-Red Time (s)	2.3	1.4	1.4	1.2	1.2	
Lost Time Adjust (s)	-0.3	0.6	0.6	-1.4	-1.4	
Total Lost Time (s)	5.0	5.0	5.0	5.0	5.0	
Lead/Lag		Lead	Lead		Lag	
Lead-Lag Optimize?		Yes	Yes		Yes	
Vehicle Extension (s)	3.0	1.5	1.5	6.0	6.0	
Minimum Gap (s)	0.2	0.2	0.2	3.0	3.0	
Time Before Reduce (s)	0.0	0.0	0.0	15.0	15.0	
Time To Reduce (s)	0.0	0.0	0.0	30.0	30.0	
Recall Mode	None	None	None	C-Max	C-Max	
Act Effct Green (s)	21.3	32.7	113.7	118.7	107.3	150.0
Actuated g/C Ratio	0.14	0.22	0.76	0.79	0.72	1.00
v/c Ratio	0.79	0.24	0.16	0.72	0.55	0.08
Control Delay	84.3	49.3	4.8	11.8	12.4	0.1
Queue Delay	0.0	0.0	0.0	0.0	0.0	0.0
Total Delay	84.3	49.3	4.8	11.8	12.4	0.1
LOS	F	D	A	B	B	A
Approach Delay	74.0			11.3	10.7	
Approach LOS	E			B	B	
Queue Length 50th (ft)	187	66	13	424	318	0
Queue Length 95th (ft)	274	115	27	636	446	0
Internal Link Dist (ft)	168			1509	1520	
Turn Bay Length (ft)			150			
Base Capacity (vph)	290	481	570	1404	1339	1592
Starvation Cap Reductn	0	0	0	0	0	0
Spillback Cap Reductn	0	0	0	0	0	0
Storage Cap Reductn	0	0	0	0	0	0
Reduced v/c Ratio	0.68	0.17	0.12	0.72	0.55	0.08

Intersection Summary			
Area Type:	Other		
Cycle Length: 150			
Actuated Cycle Length: 150			
Offset: 38 (25%), Referenced to phase 2:NBT and 6:NBSB, Start of Green			
Natural Cycle: 60			
Control Type: Actuated-Coordinated			
Maximum v/c Ratio: 0.79			
Intersection Signal Delay: 19.0		Intersection LOS: B	
Intersection Capacity Utilization 65.7%		ICU Level of Service C	

DocuSign Envelope ID: 5C03745C-4B01-4834-A65D-B77F558A4F46

Analysis Period (min) 15

Splits and Phases: 5: NC 191 (Brevard Rd) & Blue Ridge Pkwy



DocuSign Envelope ID: 5C03745C-4B01-4834-A65D-B77F558A4F46

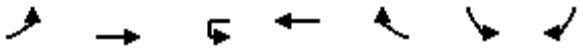

Lane Group	EBL	EBT	WBU	WBT	WBR	SBL	SBR
Lane Configurations							
Traffic Volume (vph)	29	450	0	503	407	364	29
Future Volume (vph)	29	450	0	503	407	364	29
Ideal Flow (vphpl)	1900	1900	1900	1900	1900	1900	1900
Grade (%)		-9%		5%		-9%	
Storage Length (ft)	500		350		0	0	400
Storage Lanes	1		1		1	2	1
Taper Length (ft)	25		25			25	
Lane Util. Factor	1.00	1.00	1.00	1.00	1.00	0.97	1.00
Frt					0.850		0.850
Flt Protected	0.950					0.950	
Satd. Flow (prot)	1715	1805	1715	1715	1458	3485	1607
Flt Permitted	0.365					0.950	
Satd. Flow (perm)	659	1805	1715	1715	1458	3485	1607
Right Turn on Red					No		No
Satd. Flow (RTOR)							
Link Speed (mph)		35		35		45	
Link Distance (ft)		1579		1808		1089	
Travel Time (s)		30.8		35.2		16.5	
Peak Hour Factor	0.90	0.90	0.90	0.90	0.90	0.90	0.90
Heavy Vehicles (%)	10%	10%	8%	8%	8%	5%	5%
Adj. Flow (vph)	32	500	0	559	452	404	32
Shared Lane Traffic (%)							
Lane Group Flow (vph)	32	500	0	559	452	404	32
Enter Blocked Intersection	No	No	No	No	No	No	No
Lane Alignment	Left	Left	R NA	Left	Right	Left	Right
Median Width(ft)		12		12		24	
Link Offset(ft)		0		0		0	
Crosswalk Width(ft)		16		16		16	
Two way Left Turn Lane							
Headway Factor	0.94	0.94	1.03	1.03	1.03	0.94	0.94
Turning Speed (mph)	15		9		9	15	9
Number of Detectors	1	2	1	2	1	1	1
Detector Template	Left	Thru	Left	Thru	Right	Left	Right
Leading Detector (ft)	20	100	20	100	20	20	20
Trailing Detector (ft)	0	0	0	0	0	0	0
Detector 1 Position(ft)	0	0	0	0	0	0	0
Detector 1 Size(ft)	20	6	20	6	20	20	20
Detector 1 Type	Cl+Ex	Cl+Ex	Cl+Ex	Cl+Ex	Cl+Ex	Cl+Ex	Cl+Ex
Detector 1 Channel							
Detector 1 Extend (s)	0.0	0.0	0.0	0.0	0.0	0.0	0.0
Detector 1 Queue (s)	0.0	0.0	0.0	0.0	0.0	0.0	0.0
Detector 1 Delay (s)	0.0	0.0	0.0	0.0	0.0	0.0	0.0
Detector 2 Position(ft)		94		94			
Detector 2 Size(ft)		6		6			
Detector 2 Type		Cl+Ex		Cl+Ex			
Detector 2 Channel							
Detector 2 Extend (s)		0.0		0.0			
Turn Type	D.P+P	NA	D.P+P	NA	pm+ov	Prot	pm+ov

DocuSign Envelope ID: 5C03745C-4B01-4834-A65D-B77F558A4F46

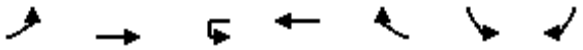

Lane Group	EBL	EBT	WBU	WBT	WBR	SBL	SBR
Protected Phases	5	2	1	6	4	4	5
Permitted Phases	6		2		6		4
Detector Phase	5	2	1	6	4	4	5
Switch Phase							
Minimum Initial (s)	7.0	10.0	7.0	10.0	7.0	7.0	7.0
Minimum Split (s)	13.7	17.3	13.3	17.3	13.8	13.8	13.7
Total Split (s)	15.0	70.0	15.0	70.0	35.0	35.0	15.0
Total Split (%)	12.5%	58.3%	12.5%	58.3%	29.2%	29.2%	12.5%
Maximum Green (s)	8.3	62.7	8.7	62.7	28.2	28.2	8.3
Yellow Time (s)	3.3	4.6	3.0	4.6	3.3	3.3	3.3
All-Red Time (s)	3.4	2.7	3.3	2.7	3.5	3.5	3.4
Lost Time Adjust (s)	-1.7	-2.3	-1.3	-2.3	-2.3	-1.8	-1.8
Total Lost Time (s)	5.0	5.0	5.0	5.0	4.5	5.0	4.9
Lead/Lag	Lead	Lead	Lag	Lag			Lead
Lead-Lag Optimize?	Yes	Yes	Yes	Yes			Yes
Vehicle Extension (s)	2.0	3.0	2.0	3.0	3.0	3.0	2.0
Recall Mode	None	C-Max	None	C-Max	None	None	None
Act Effct Green (s)	84.2	88.2		77.2	105.4	21.8	35.6
Actuated g/C Ratio	0.70	0.74		0.64	0.88	0.18	0.30
v/c Ratio	0.06	0.38		0.51	0.35	0.64	0.07
Control Delay	5.5	7.3		17.2	3.4	49.8	29.0
Queue Delay	0.0	0.0		0.0	0.0	0.0	0.0
Total Delay	5.5	7.3		17.2	3.4	49.8	29.0
LOS	A	A		B	A	D	C
Approach Delay		7.2		11.1		48.3	
Approach LOS		A		B		D	
Queue Length 50th (ft)	6	124		268	86	151	18
Queue Length 95th (ft)	17	211		471	113	192	40
Internal Link Dist (ft)		1499		1728		1009	
Turn Bay Length (ft)	500						400
Base Capacity (vph)	556	1326		1103	1347	871	494
Starvation Cap Reductn	0	0		0	0	0	0
Spillback Cap Reductn	0	0		0	0	0	0
Storage Cap Reductn	0	0		0	0	0	0
Reduced v/c Ratio	0.06	0.38		0.51	0.34	0.46	0.06

Intersection Summary			
Area Type:	Other		
Cycle Length: 120			
Actuated Cycle Length: 120			
Offset: 111 (93%), Referenced to phase 2:EBWB and 6:EBWB, Start of Green			
Natural Cycle: 60			
Control Type: Actuated-Coordinated			
Maximum v/c Ratio: 0.64			
Intersection Signal Delay: 18.2		Intersection LOS: B	
Intersection Capacity Utilization 45.2%		ICU Level of Service A	
Analysis Period (min) 15			

DocuSign Envelope ID: 5C03745C-4B01-4834-A65D-B77F558A4F46

Splits and Phases: 8: NC 146 (Long Shoals Rd) & Clayton Rd

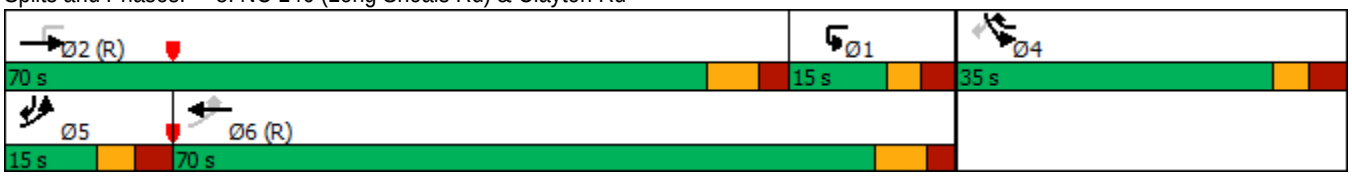

DocuSign Envelope ID: 5C03745C-4B01-4834-A65D-B77F558A4F46

Intersection	
Int Delay, s/veh	4.9

Movement	EBU	EBT	EBR	WBL	WBT	NBL	NBR
Lane Configurations							
Traffic Vol, veh/h	0	820	19	313	798	11	177
Future Vol, veh/h	0	820	19	313	798	11	177
Conflicting Peds, #/hr	0	0	0	0	0	0	0
Sign Control	Free	Free	Free	Free	Free	Stop	Stop
RT Channelized	-	-	None	-	None	-	Stop
Storage Length	325	-	-	325	-	200	0
Veh in Median Storage, #	-	0	-	-	0	0	-
Grade, %	-	0	-	-	0	0	-
Peak Hour Factor	90	90	90	90	90	90	90
Heavy Vehicles, %	8	8	8	8	8	3	3
Mvmt Flow	0	911	21	348	887	12	197

Major/Minor	Major1			Major2		Minor1	
Conflicting Flow All	887	0	0	932	0	2062	466
Stage 1	-	-	-	-	-	922	-
Stage 2	-	-	-	-	-	1140	-
Critical Hdwy	6.56	-	-	4.26	-	6.86	6.96
Critical Hdwy Stg 1	-	-	-	-	-	5.86	-
Critical Hdwy Stg 2	-	-	-	-	-	5.86	-
Follow-up Hdwy	2.58	-	-	2.28	-	3.53	3.33
Pot Cap-1 Maneuver	375	-	-	694	-	47	541
Stage 1	-	-	-	-	-	345	-
Stage 2	-	-	-	-	-	265	-
Platoon blocked, %		-	-		-		
Mov Cap-1 Maneuver	375	-	-	694	-	23	541
Mov Cap-2 Maneuver	-	-	-	-	-	23	-
Stage 1	-	-	-	-	-	345	-
Stage 2	-	-	-	-	-	132	-

Approach	EB	WB	NB
HCM Control Delay, s	0	4.3	30.7
HCM LOS			D

Minor Lane/Major Mvmt	NBLn1	NBLn2	EBU	EBT	EBR	WBL	WBT
Capacity (veh/h)	23	541	375	-	-	694	-
HCM Lane V/C Ratio	0.531	0.364	-	-	-	0.501	-
HCM Control Delay (s)	276.4	15.4	0	-	-	15.3	-
HCM Lane LOS	F	C	A	-	-	C	-
HCM 95th %tile Q(veh)	1.6	1.6	0	-	-	2.8	-

DocuSign Envelope ID: 5C03745C-4B01-4834-A65D-B77F558A4F46

Lane Group	EBL	EBT	EBR2	WBL	WBT	SEL	SER2	NWL
Lane Configurations								
Traffic Volume (vph)	168	610	219	438	700	552	190	221
Future Volume (vph)	168	610	219	438	700	552	190	221
Ideal Flow (vphpl)	1900	1900	1900	1900	1900	1900	1900	1900
Grade (%)		3%			-7%			
Storage Length (ft)	475			0		0		0
Storage Lanes	2			2		2		2
Taper Length (ft)	25			25		25		25
Lane Util. Factor	0.97	0.95	1.00	0.97	0.95	0.97	1.00	0.97
Frt			0.850				0.850	
Flt Protected	0.950			0.950		0.950		0.950
Satd. Flow (prot)	3080	3292	1420	3236	3593	3434	1525	3291
Flt Permitted	0.950			0.950		0.950		0.950
Satd. Flow (perm)	3080	3292	1420	3236	3593	3434	1525	3291
Right Turn on Red			Yes				Yes	
Satd. Flow (RTOR)			285				285	
Link Speed (mph)		45			45			
Link Distance (ft)		1000			418			
Travel Time (s)		15.2			6.3			
Peak Hour Factor	0.90	0.90	0.90	0.90	0.90	0.90	0.90	0.90
Heavy Vehicles (%)	12%	8%	12%	12%	4%	4%	8%	8%
Adj. Flow (vph)	187	678	243	487	778	613	211	246
Shared Lane Traffic (%)								
Lane Group Flow (vph)	187	678	243	487	778	613	211	246
Enter Blocked Intersection	No	No	No	No	No	No	No	No
Lane Alignment	Left	Left	Right	Left	Left	Left	Right	Left
Median Width(ft)		24			24			
Link Offset(ft)		0			0			
Crosswalk Width(ft)		16			16			
Two way Left Turn Lane								
Headway Factor	1.02	1.02	1.02	0.96	0.96	0.97	0.97	0.98
Turning Speed (mph)	15		9	15		15	9	15
Number of Detectors	1	2	1	1	2	1	1	1
Detector Template	Left	Thru	Right	Left	Thru	Left	Right	Left
Leading Detector (ft)	20	100	20	20	100	20	20	20
Trailing Detector (ft)	0	0	0	0	0	0	0	0
Detector 1 Position(ft)	0	0	0	0	0	0	0	0
Detector 1 Size(ft)	20	6	20	20	6	20	20	20
Detector 1 Type	Cl+Ex	Cl+Ex	Cl+Ex	Cl+Ex	Cl+Ex	Cl+Ex	Cl+Ex	Cl+Ex
Detector 1 Channel								
Detector 1 Extend (s)	0.0	0.0	0.0	0.0	0.0	0.0	0.0	0.0
Detector 1 Queue (s)	0.0	0.0	0.0	0.0	0.0	0.0	0.0	0.0
Detector 1 Delay (s)	0.0	0.0	0.0	0.0	0.0	0.0	0.0	0.0
Detector 2 Position(ft)		94			94			
Detector 2 Size(ft)		6			6			
Detector 2 Type		Cl+Ex			Cl+Ex			
Detector 2 Channel								
Detector 2 Extend (s)		0.0			0.0			
Turn Type	Prot	NA	Free	Prot	NA	Prot	Free	Prot

DocuSign Envelope ID: 5C03745C-4B01-4834-A65D-B77F558A4F46

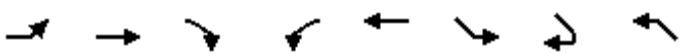

Lane Group	EBL	EBT	EBR2	WBL	WBT	SEL	SER2	NWL
Protected Phases	5	2		1	6	4		8
Permitted Phases			Free				Free	
Detector Phase	5	2		1	6	4		8
Switch Phase								
Minimum Initial (s)	7.0	12.0		7.0	12.0	7.0		7.0
Minimum Split (s)	15.3	21.0		14.5	21.0	15.0		15.0
Total Split (s)	18.0	60.0		30.0	72.0	30.0		30.0
Total Split (%)	15.0%	50.0%		25.0%	60.0%	25.0%		25.0%
Maximum Green (s)	9.7	51.0		22.5	63.0	22.0		22.0
Yellow Time (s)	3.1	5.2		3.6	5.2	3.5		3.5
All-Red Time (s)	5.2	3.8		3.9	3.8	4.5		4.5
Lost Time Adjust (s)	-3.3	-4.0		-2.5	-4.0	-3.0		-3.0
Total Lost Time (s)	5.0	5.0		5.0	5.0	5.0		5.0
Lead/Lag	Lead	Lead		Lag	Lag			
Lead-Lag Optimize?	Yes	Yes		Yes	Yes			
Vehicle Extension (s)	2.0	6.0		2.0	6.0	2.0		2.0
Minimum Gap (s)	0.2	3.0		0.2	3.0	0.2		0.2
Time Before Reduce (s)	0.0	15.0		0.0	15.0	0.0		0.0
Time To Reduce (s)	0.0	30.0		0.0	30.0	0.0		0.0
Recall Mode	None	C-Max		None	C-Max	None		None
Act Effct Green (s)	13.0	55.0	120.0	25.0	67.0	25.0	120.0	25.0
Actuated g/C Ratio	0.11	0.46	1.00	0.21	0.56	0.21	1.00	0.21
v/c Ratio	0.56	0.45	0.17	0.72	0.39	0.86	0.14	0.36
Control Delay	52.4	15.5	0.3	36.6	9.2	58.8	0.2	42.4
Queue Delay	0.0	0.7	0.0	0.0	0.4	0.8	0.0	0.0
Total Delay	52.4	16.2	0.3	36.6	9.6	59.7	0.2	42.4
LOS	D	B	A	D	A	E	A	D
Approach Delay		18.8			20.0			
Approach LOS		B			B			
Queue Length 50th (ft)	55	122	0	148	85	237	0	84
Queue Length 95th (ft)	93	173	0	220	137	#327	0	124
Internal Link Dist (ft)		920			338			
Turn Bay Length (ft)	475							
Base Capacity (vph)	333	1508	1420	674	2006	715	1525	685
Starvation Cap Reductn	0	0	0	0	686	0	0	0
Spillback Cap Reductn	0	481	0	0	0	17	0	0
Storage Cap Reductn	0	0	0	0	0	0	0	0
Reduced v/c Ratio	0.56	0.66	0.17	0.72	0.59	0.88	0.14	0.36

Intersection Summary			
Area Type:	Other		
Cycle Length: 120			
Actuated Cycle Length: 120			
Offset: 0 (0%), Referenced to phase 2:EBT and 6:WBT, Start of Green, Master Intersection			
Natural Cycle: 90			
Control Type: Actuated-Coordinated			
Maximum v/c Ratio: 0.88			
Intersection Signal Delay: 27.1		Intersection LOS: C	
Intersection Capacity Utilization 57.6%		ICU Level of Service B	

DocuSign Envelope ID: 5C03745C-4B01-4834-A65D-B77F558A4F46

Analysis Period (min) 15

\# 95th percentile volume exceeds capacity, queue may be longer.

Queue shown is maximum after two cycles.

Splits and Phases: 10: I-26 Ramp & NC 146 (Long Shoals Rd)

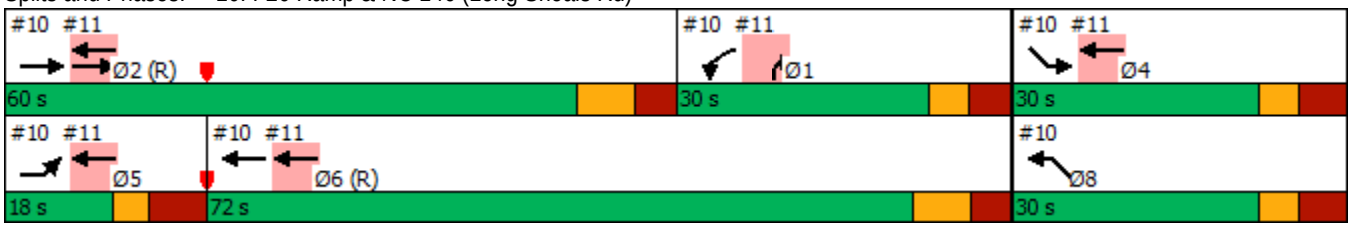

DocuSign Envelope ID: 5C03745C-4B01-4834-A65D-B77F558A4F46

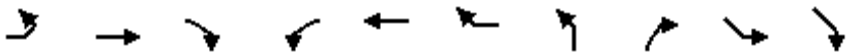

Lane Group	EBL	EBT	EBR	WBL	WBT	WBR	NBL	NBR	SEL	SER	Ø4	Ø5
Lane Configurations												
Traffic Volume (vph)	0	1162	0	0	1138	562	0	385	0	0		
Future Volume (vph)	0	1162	0	0	1138	562	0	385	0	0		
Ideal Flow (vphpl)	1900	1900	1900	1900	1900	1900	1900	1900	1900	1900		
Storage Length (ft)	0		0	0		275	0	0	0	0		
Storage Lanes	0		0	0		1	0	2	0	0		
Taper Length (ft)	25			25			25		25			
Lane Util. Factor	1.00	0.95	1.00	1.00	0.95	1.00	1.00	0.88	1.00	1.00		
Frt						0.850		0.850				
Flt Protected												
Satd. Flow (prot)	0	3471	0	0	3471	1442	0	2733	0	0		
Flt Permitted												
Satd. Flow (perm)	0	3471	0	0	3471	1442	0	2733	0	0		
Right Turn on Red			No			No		No				
Satd. Flow (RTOR)												
Link Speed (mph)		45			45		45		45			
Link Distance (ft)		418			593		396		464			
Travel Time (s)		6.3			9.0		6.0		7.0			
Peak Hour Factor	0.90	0.90	0.90	0.90	0.90	0.90	0.90	0.90	0.90	0.90		
Heavy Vehicles (%)	2%	4%	2%	2%	4%	12%	2%	4%	2%	2%		
Adj. Flow (vph)	0	1291	0	0	1264	624	0	428	0	0		
Shared Lane Traffic (%)												
Lane Group Flow (vph)	0	1291	0	0	1264	624	0	428	0	0		
Enter Blocked Intersection	No	No	No	No	No	No	No	No	No	No		
Lane Alignment	Left	L NA	Right	Left	Right	Right	Left	R NA	Left	Right		
Median Width(ft)		0			24		0		0			
Link Offset(ft)		0			0		0		0			
Crosswalk Width(ft)		16			16		16		16			
Two way Left Turn Lane												
Headway Factor	1.00	1.00	1.00	1.00	1.00	1.00	1.00	1.00	1.00	1.00		
Turning Speed (mph)	15		9	15		9	15	9	15	9		
Number of Detectors		2			2	1		1				
Detector Template		Thru			Thru	Right		Right				
Leading Detector (ft)		100			100	20		20				
Trailing Detector (ft)		0			0	0		0				
Detector 1 Position(ft)		0			0	0		0				
Detector 1 Size(ft)		6			6	20		20				
Detector 1 Type		Cl+Ex			Cl+Ex	Cl+Ex		Cl+Ex				
Detector 1 Channel												
Detector 1 Extend (s)		0.0			0.0	0.0		0.0				
Detector 1 Queue (s)		0.0			0.0	0.0		0.0				
Detector 1 Delay (s)		0.0			0.0	0.0		0.0				
Detector 2 Position(ft)		94			94							
Detector 2 Size(ft)		6			6							
Detector 2 Type		Cl+Ex			Cl+Ex							
Detector 2 Channel												
Detector 2 Extend (s)		0.0			0.0							
Turn Type		NA			NA	Free		Prot				
Protected Phases		2			2 4 5 6			1			4	5

DocuSign Envelope ID: 5C03745C-4B01-4834-A65D-B77F558A4F46

Lane Group	Ø6	Ø8
Lane Configurations		
Traffic Volume (vph)		
Future Volume (vph)		
Ideal Flow (vphpl)		
Storage Length (ft)		
Storage Lanes		
Taper Length (ft)		
Lane Util. Factor		
Frt		
Flt Protected		
Satd. Flow (prot)		
Flt Permitted		
Satd. Flow (perm)		
Right Turn on Red		
Satd. Flow (RTOR)		
Link Speed (mph)		
Link Distance (ft)		
Travel Time (s)		
Peak Hour Factor		
Heavy Vehicles (%)		
Adj. Flow (vph)		
Shared Lane Traffic (%)		
Lane Group Flow (vph)		
Enter Blocked Intersection		
Lane Alignment		
Median Width(ft)		
Link Offset(ft)		
Crosswalk Width(ft)		
Two way Left Turn Lane		
Headway Factor		
Turning Speed (mph)		
Number of Detectors		
Detector Template		
Leading Detector (ft)		
Trailing Detector (ft)		
Detector 1 Position(ft)		
Detector 1 Size(ft)		
Detector 1 Type		
Detector 1 Channel		
Detector 1 Extend (s)		
Detector 1 Queue (s)		
Detector 1 Delay (s)		
Detector 2 Position(ft)		
Detector 2 Size(ft)		
Detector 2 Type		
Detector 2 Channel		
Detector 2 Extend (s)		
Turn Type		
Protected Phases	6	8

DocuSign Envelope ID: 5C03745C-4B01-4834-A65D-B77F558A4F46

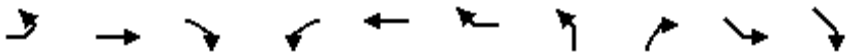

Lane Group	EBL	EBT	EBR	WBL	WBT	WBR	NBL	NBR	SEL	SER	Ø4	Ø5
Permitted Phases						Free						
Detector Phase		2			2 4 5 6			1				
Switch Phase												
Minimum Initial (s)		12.0						7.0			7.0	7.0
Minimum Split (s)		21.0						14.5			15.0	15.3
Total Split (s)		60.0						30.0			30.0	18.0
Total Split (%)		50.0%						25.0%			25%	15%
Maximum Green (s)		51.0						22.5			22.0	9.7
Yellow Time (s)		5.2						3.6			3.5	3.1
All-Red Time (s)		3.8						3.9			4.5	5.2
Lost Time Adjust (s)		0.0						0.0				
Total Lost Time (s)		9.0						7.5				
Lead/Lag		Lead						Lag				Lead
Lead-Lag Optimize?		Yes						Yes				Yes
Vehicle Extension (s)		6.0						2.0			2.0	2.0
Minimum Gap (s)		3.0						0.2			0.2	0.2
Time Before Reduce (s)		15.0						0.0			0.0	0.0
Time To Reduce (s)		30.0						0.0			0.0	0.0
Recall Mode		C-Max						None			None	None
Act Effct Green (s)		51.0			120.0	120.0		22.5				
Actuated g/C Ratio		0.42			1.00	1.00		0.19				
v/c Ratio		0.88			0.36	0.43		0.84				
Control Delay		27.2			0.1	0.4		62.4				
Queue Delay		3.3			0.0	0.0		0.0				
Total Delay		30.5			0.1	0.4		62.4				
LOS		C			A	A		E				
Approach Delay		30.5			0.2		62.4					
Approach LOS		C			A		E					
Queue Length 50th (ft)		505			0	0		183				
Queue Length 95th (ft)		599			m0	m0		#271				
Internal Link Dist (ft)		338			513		316		384			
Turn Bay Length (ft)						275						
Base Capacity (vph)		1475			3471	1442		512				
Starvation Cap Reductn		113			0	0		0				
Spillback Cap Reductn		0			0	0		0				
Storage Cap Reductn		0			0	0		0				
Reduced v/c Ratio		0.95			0.36	0.43		0.84				

Intersection Summary			
Area Type:	Other		
Cycle Length: 120			
Actuated Cycle Length: 120			
Offset: 0 (0%), Referenced to phase 2:EBT and 6:WBT, Start of Green, Master Intersection			
Natural Cycle: 90			
Control Type: Actuated-Coordinated			
Maximum v/c Ratio: 0.88			
Intersection Signal Delay: 18.4		Intersection LOS: B	
Intersection Capacity Utilization 59.3%		ICU Level of Service B	
Analysis Period (min) 15			

DocuSign Envelope ID: 5C03745C-4B01-4834-A65D-B77F558A4F46

Lane Group	Ø6	Ø8
Permitted Phases		
Detector Phase		
Switch Phase		
Minimum Initial (s)	12.0	7.0
Minimum Split (s)	21.0	15.0
Total Split (s)	72.0	30.0
Total Split (%)	60%	25%
Maximum Green (s)	63.0	22.0
Yellow Time (s)	5.2	3.5
All-Red Time (s)	3.8	4.5
Lost Time Adjust (s)		
Total Lost Time (s)		
Lead/Lag	Lag	
Lead-Lag Optimize?	Yes	
Vehicle Extension (s)	6.0	2.0
Minimum Gap (s)	3.0	0.2
Time Before Reduce (s)	15.0	0.0
Time To Reduce (s)	30.0	0.0
Recall Mode	C-Max	None
Act Effct Green (s)		
Actuated g/C Ratio		
v/c Ratio		
Control Delay		
Queue Delay		
Total Delay		
LOS		
Approach Delay		
Approach LOS		
Queue Length 50th (ft)		
Queue Length 95th (ft)		
Internal Link Dist (ft)		
Turn Bay Length (ft)		
Base Capacity (vph)		
Starvation Cap Reductn		
Spillback Cap Reductn		
Storage Cap Reductn		
Reduced v/c Ratio		

Intersection Summary

DocuSign Envelope ID: 5C03745C-4B01-4834-A65D-B77F558A4F46

95th percentile volume exceeds capacity, queue may be longer.
Queue shown is maximum after two cycles.
m Volume for 95th percentile queue is metered by upstream signal.

Splits and Phases: 11: I-26 NWB Ramp & NC 146 (Long Shoals Rd)

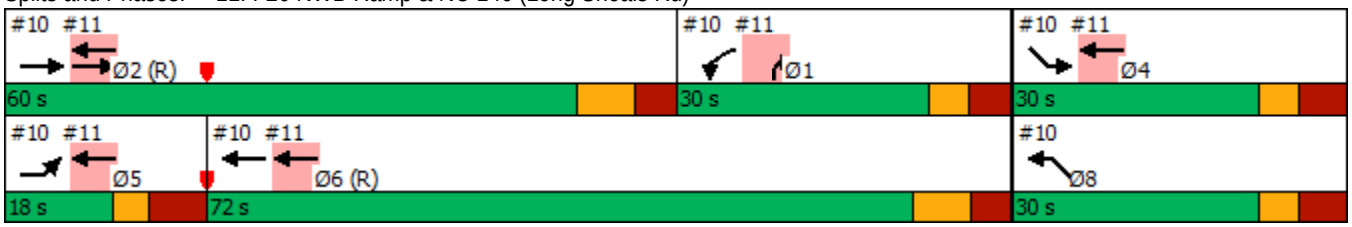

DocuSign Envelope ID: 5C03745C-4B01-4834-A65D-B77F558A4F46

Lane Group	EBL	EBT	EBR	WBL	WBT	WBR	NBL	NBT	NBR	SBL	SBT	SBR
Lane Configurations												
Traffic Volume (vph)	377	1110	60	14	1159	255	75	22	16	283	22	466
Future Volume (vph)	377	1110	60	14	1159	255	75	22	16	283	22	466
Ideal Flow (vphpl)	1900	1900	1900	1900	1900	1900	1900	1900	1900	1900	1900	1900
Grade (%)		6%			-6%			11%			7%	
Storage Length (ft)	350		400	250		225	0		0	450		0
Storage Lanes	2		1	1		1	0		0	1		1
Taper Length (ft)	25			25			25			25		
Lane Util. Factor	0.97	0.95	1.00	1.00	0.95	1.00	1.00	1.00	1.00	0.95	0.95	1.00
Frt			0.850			0.850		0.981				0.850
Flt Protected	0.950			0.950				0.968		0.950	0.959	
Satd. Flow (prot)	3266	3367	1506	1788	3575	1599	0	1624	0	1561	1576	1470
Flt Permitted	0.950			0.151				0.968		0.950	0.959	
Satd. Flow (perm)	3266	3367	1506	284	3575	1599	0	1624	0	1561	1576	1470
Right Turn on Red			No			No			No			No
Satd. Flow (RTOR)												
Link Speed (mph)		45			45			25			25	
Link Distance (ft)		593			1582			722			992	
Travel Time (s)		9.0			24.0			19.7			27.1	
Peak Hour Factor	0.90	0.90	0.90	0.90	0.90	0.90	0.90	0.90	0.90	0.90	0.90	0.90
Heavy Vehicles (%)	4%	4%	4%	4%	4%	4%	5%	5%	5%	6%	6%	6%
Adj. Flow (vph)	419	1233	67	16	1288	283	83	24	18	314	24	518
Shared Lane Traffic (%)										46%		
Lane Group Flow (vph)	419	1233	67	16	1288	283	0	125	0	170	168	518
Enter Blocked Intersection	No	No	No	No	No	No	No	No	No	No	No	No
Lane Alignment	Left	Left	Right	Left	Left	Right	Left	Left	Right	Left	Left	Right
Median Width(ft)		24			24			0			12	
Link Offset(ft)		0			0			0			0	
Crosswalk Width(ft)		16			16			16			16	
Two way Left Turn Lane												
Headway Factor	1.04	1.04	1.04	0.96	0.96	0.96	1.08	1.08	1.08	1.05	1.05	1.05
Turning Speed (mph)	15		9	15		9	15		9	15		9
Number of Detectors	1	2	1	1	2	1	1	2		1	2	1
Detector Template	Left	Thru	Right	Left	Thru	Right	Left	Thru		Left	Thru	Right
Leading Detector (ft)	20	100	20	20	100	20	20	100		20	100	20
Trailing Detector (ft)	0	0	0	0	0	0	0	0		0	0	0
Detector 1 Position(ft)	0	0	0	0	0	0	0	0		0	0	0
Detector 1 Size(ft)	20	6	20	20	6	20	20	6		20	6	20
Detector 1 Type	Cl+Ex	Cl+Ex	Cl+Ex	Cl+Ex	Cl+Ex	Cl+Ex	Cl+Ex	Cl+Ex		Cl+Ex	Cl+Ex	Cl+Ex
Detector 1 Channel												
Detector 1 Extend (s)	0.0	0.0	0.0	0.0	0.0	0.0	0.0	0.0		0.0	0.0	0.0
Detector 1 Queue (s)	0.0	0.0	0.0	0.0	0.0	0.0	0.0	0.0		0.0	0.0	0.0
Detector 1 Delay (s)	0.0	0.0	0.0	0.0	0.0	0.0	0.0	0.0		0.0	0.0	0.0
Detector 2 Position(ft)		94			94			94			94	
Detector 2 Size(ft)		6			6			6			6	
Detector 2 Type		Cl+Ex			Cl+Ex			Cl+Ex			Cl+Ex	
Detector 2 Channel												
Detector 2 Extend (s)		0.0			0.0			0.0			0.0	
Turn Type	Prot	NA	pm+ov	D.P+P	NA	pm+ov	Split	NA		Split	NA	pm+ov

DocuSign Envelope ID: 5C03745C-4B01-4834-A65D-B77F558A4F46

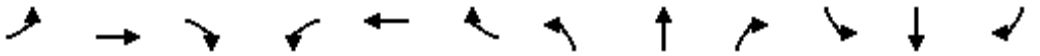

Lane Group	EBL	EBT	EBR	WBL	WBT	WBR	NBL	NBT	NBR	SBL	SBT	SBR
Protected Phases	5	2	4	1	6	3	4	4		3	3	5
Permitted Phases			2	2		6						3
Detector Phase	5	2	4	1	6	3	4	4		3	3	5
Switch Phase												
Minimum Initial (s)	7.0	12.0	7.0	7.0	12.0	7.0	7.0	7.0		7.0	7.0	7.0
Minimum Split (s)	13.3	20.7	39.3	13.3	32.6	13.4	39.3	39.3		13.4	13.4	13.3
Total Split (s)	30.0	70.0	16.0	14.0	54.0	20.0	16.0	16.0		20.0	20.0	30.0
Total Split (%)	25.0%	58.3%	13.3%	11.7%	45.0%	16.7%	13.3%	13.3%		16.7%	16.7%	25.0%
Maximum Green (s)	23.7	64.3	9.7	7.7	47.4	13.6	9.7	9.7		13.6	13.6	23.7
Yellow Time (s)	3.0	4.1	3.0	3.1	5.1	3.0	3.0	3.0		3.0	3.0	3.0
All-Red Time (s)	3.3	1.6	3.3	3.2	1.5	3.4	3.3	3.3		3.4	3.4	3.3
Lost Time Adjust (s)	-1.3	-0.7	-1.3	-1.3	-1.6	-1.4		-1.3		-1.4	-1.4	-1.3
Total Lost Time (s)	5.0	5.0	5.0	5.0	5.0	5.0		5.0		5.0	5.0	5.0
Lead/Lag	Lead	Lead	Lead	Lag	Lag	Lag	Lead	Lead		Lag	Lag	Lead
Lead-Lag Optimize?												
Vehicle Extension (s)	3.0	6.0	3.0	2.0	6.0	3.0	3.0	3.0		3.0	3.0	3.0
Minimum Gap (s)	0.2	3.0	0.2	0.2	3.0	0.2	0.2	0.2		0.2	0.2	0.2
Time Before Reduce (s)	0.0	20.0	0.0	0.0	20.0	0.0	0.0	0.0		0.0	0.0	0.0
Time To Reduce (s)	0.0	30.0	0.0	0.0	30.0	0.0	0.0	0.0		0.0	0.0	0.0
Recall Mode	None	C-Max	None	None	C-Max	None	None	None		None	None	None
Walk Time (s)		7.0	7.0		7.0		7.0	7.0				
Flash Dont Walk (s)		8.0	26.0		19.0		26.0	26.0				
Pedestrian Calls (#/hr)		0	0		0		0	0				
Act Effct Green (s)	25.0	73.4	87.4	77.0	49.0	64.0		11.0		15.0	15.0	45.0
Actuated g/C Ratio	0.21	0.61	0.73	0.64	0.41	0.53		0.09		0.12	0.12	0.38
v/c Ratio	0.62	0.60	0.06	0.06	0.88	0.33		0.84		0.88	0.86	0.94
Control Delay	55.5	8.0	1.0	8.4	41.4	9.7		95.8		90.7	87.4	63.1
Queue Delay	0.0	0.6	0.0	0.0	0.0	0.0		0.0		0.0	0.0	0.0
Total Delay	55.5	8.6	1.0	8.4	41.4	9.7		95.8		90.7	87.4	63.1
LOS	E	A	A	A	D	A		F		F	F	E
Approach Delay		19.7			35.4			95.8			73.4	
Approach LOS		B			D			F			E	
Queue Length 50th (ft)	131	63	0	4	477	69		97		137	135	384
Queue Length 95th (ft)	m159	152	m7	12	580	105		#207		#272	#268	#605
Internal Link Dist (ft)		513			1502			642			912	
Turn Bay Length (ft)	350		400	250		225				450		
Base Capacity (vph)	681	2060	1097	294	1459	852		148		195	197	551
Starvation Cap Reductn	0	418	0	0	0	0		0		0	0	0
Spillback Cap Reductn	0	0	0	0	0	0		0		0	0	0
Storage Cap Reductn	0	0	0	0	0	0		0		0	0	0
Reduced v/c Ratio	0.62	0.75	0.06	0.05	0.88	0.33		0.84		0.87	0.85	0.94

Intersection Summary	
Area Type:	Other
Cycle Length: 120	
Actuated Cycle Length: 120	
Offset: 12 (10%), Referenced to phase 2:EBWB and 6:WBT, Start of Green	
Natural Cycle: 150	
Control Type: Actuated-Coordinated	

DocuSign Envelope ID: 5C03745C-4B01-4834-A65D-B77F558A4F46

Maximum v/c Ratio: 0.94	
Intersection Signal Delay: 38.4	Intersection LOS: D
Intersection Capacity Utilization 79.7%	ICU Level of Service D
Analysis Period (min) 15	

\# 95th percentile volume exceeds capacity, queue may be longer.
Queue shown is maximum after two cycles.
m Volume for 95th percentile queue is metered by upstream signal.

Splits and Phases: 12: Skyland Inn Dr/Schenck Pkwy & NC 146 (Long Shoals Rd)

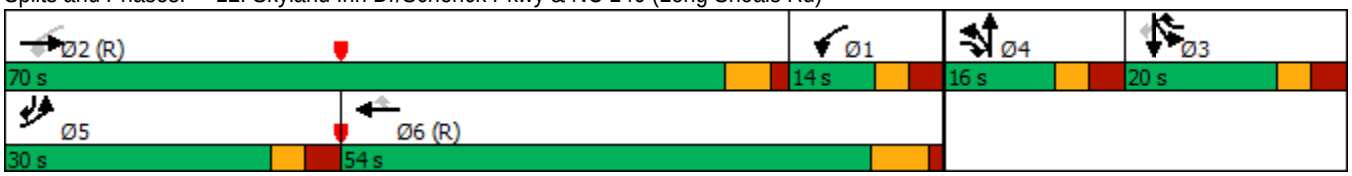

DocuSign Envelope ID: 5C03745C-4B01-4834-A65D-B77F558A4F46

Appendix M – 2045 No-Build Synchro Results

Note that the report describes the directions of I-26 as they are signed (eastbound and westbound) while the Synchro files use ordinal direction of the ramps in the description. For clarification, southeast-bound ramps enter or exit from eastbound I-26 while northwest-bound ramps enter or exit from I-26 westbound.

DocuSign Envelope ID: 5C03745C-4B01-4834-A65D-B77F558A4F46

2045 No-Build - AM

DocuSign Envelope ID: 5C03745C-4B01-4834-A65D-B77F558A4F46

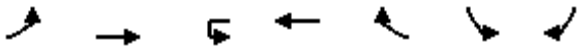

Lane Group	EBL	EBT	WBU	WBT	WBR	SBL	SBR
Lane Configurations							
Traffic Volume (vph)	66	1464	0	1601	87	111	93
Future Volume (vph)	66	1464	0	1601	87	111	93
Ideal Flow (vphpl)	1900	1900	1900	1900	1900	1900	1900
Storage Length (ft)	150		150		175	0	175
Storage Lanes	1		1		1	1	1
Taper Length (ft)	25		25			25	
Lane Util. Factor	1.00	0.95	1.00	0.95	1.00	1.00	1.00
Frt					0.850		0.850
Flt Protected	0.950					0.950	
Satd. Flow (prot)	1703	3406	1792	3406	1524	1703	1524
Flt Permitted	0.950					0.950	
Satd. Flow (perm)	1703	3406	1792	3406	1524	1703	1524
Right Turn on Red					No		No
Satd. Flow (RTOR)							
Link Speed (mph)		45		45		25	
Link Distance (ft)		1606		558		1108	
Travel Time (s)		24.3		8.5		30.2	
Peak Hour Factor	0.90	0.90	0.90	0.90	0.90	0.90	0.90
Heavy Vehicles (%)	6%	6%	6%	6%	6%	6%	6%
Adj. Flow (vph)	73	1627	0	1779	97	123	103
Shared Lane Traffic (%)							
Lane Group Flow (vph)	73	1627	0	1779	97	123	103
Enter Blocked Intersection	No	No	No	No	No	No	No
Lane Alignment	Left	Left	R NA	Left	Right	Left	Right
Median Width(ft)		12		12		12	
Link Offset(ft)		0		0		0	
Crosswalk Width(ft)		16		16		16	
Two way Left Turn Lane							
Headway Factor	1.00	1.00	1.00	1.00	1.00	1.00	1.00
Turning Speed (mph)	15		9		9	15	9
Number of Detectors	1	2	1	2	1	1	1
Detector Template	Left	Thru	Left	Thru	Right	Left	Right
Leading Detector (ft)	20	100	20	100	20	20	20
Trailing Detector (ft)	0	0	0	0	0	0	0
Detector 1 Position(ft)	0	0	0	0	0	0	0
Detector 1 Size(ft)	20	6	20	6	20	20	20
Detector 1 Type	Cl+Ex	Cl+Ex	Cl+Ex	Cl+Ex	Cl+Ex	Cl+Ex	Cl+Ex
Detector 1 Channel							
Detector 1 Extend (s)	0.0	0.0	0.0	0.0	0.0	0.0	0.0
Detector 1 Queue (s)	0.0	0.0	0.0	0.0	0.0	0.0	0.0
Detector 1 Delay (s)	0.0	0.0	0.0	0.0	0.0	0.0	0.0
Detector 2 Position(ft)		94		94			
Detector 2 Size(ft)		6		6			
Detector 2 Type		Cl+Ex		Cl+Ex			
Detector 2 Channel							
Detector 2 Extend (s)		0.0		0.0			
Turn Type	Prot	NA	Prot	NA	pm+ov	Prot	pm+ov
Protected Phases	5	2	1	6	4	4	5

DocuSign Envelope ID: 5C03745C-4B01-4834-A65D-B77F558A4F46

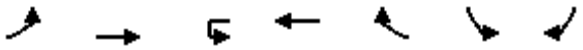

Lane Group	EBL	EBT	WBU	WBT	WBR	SBL	SBR
Permitted Phases					6		4
Detector Phase	5	2	1	6	4	4	5
Switch Phase							
Minimum Initial (s)	7.0	12.0	7.0	12.0	7.0	7.0	7.0
Minimum Split (s)	13.1	18.8	11.9	35.8	36.5	36.5	13.1
Total Split (s)	14.0	71.0	12.0	69.0	37.0	37.0	14.0
Total Split (%)	11.7%	59.2%	10.0%	57.5%	30.8%	30.8%	11.7%
Maximum Green (s)	7.9	64.2	7.1	62.2	30.5	30.5	7.9
Yellow Time (s)	3.0	4.9	3.0	4.9	3.0	3.0	3.0
All-Red Time (s)	3.1	1.9	1.9	1.9	3.5	3.5	3.1
Lost Time Adjust (s)	-1.1	-1.8	0.1	-1.8	-1.8	-1.5	-1.1
Total Lost Time (s)	5.0	5.0	5.0	5.0	4.7	5.0	5.0
Lead/Lag	Lag	Lead	Lag	Lead			Lag
Lead-Lag Optimize?	Yes	Yes	Yes	Yes			Yes
Vehicle Extension (s)	2.0	6.0	2.0	6.0	2.0	2.0	2.0
Minimum Gap (s)	0.2	3.0	0.2	3.0	0.2	0.2	0.2
Time Before Reduce (s)	0.0	15.0	0.0	15.0	0.0	0.0	0.0
Time To Reduce (s)	0.0	30.0	0.0	30.0	0.0	0.0	0.0
Recall Mode	None	C-Max	None	C-Max	None	None	None
Walk Time (s)				7.0	7.0	7.0	
Flash Dont Walk (s)				22.0	23.0	23.0	
Pedestrian Calls (#/hr)				0	0	0	
Act Effct Green (s)	8.8	95.4		81.6	101.5	14.6	28.4
Actuated g/C Ratio	0.07	0.80		0.68	0.85	0.12	0.24
v/c Ratio	0.59	0.60		0.77	0.08	0.59	0.29
Control Delay	73.1	6.4		13.1	1.5	61.1	38.5
Queue Delay	0.0	0.1		0.7	0.0	0.0	0.0
Total Delay	73.1	6.5		13.8	1.5	61.1	38.5
LOS	E	A		B	A	E	D
Approach Delay		9.3		13.1		50.8	
Approach LOS		A		B		D	
Queue Length 50th (ft)	56	212		240	5	92	66
Queue Length 95th (ft)	#115	332		464	m14	149	110
Internal Link Dist (ft)		1526		478		1028	
Turn Bay Length (ft)	150				175		175
Base Capacity (vph)	127	2708		2316	1288	454	350
Starvation Cap Reductn	0	0		226	0	0	0
Spillback Cap Reductn	0	150		0	0	0	0
Storage Cap Reductn	0	0		0	0	0	0
Reduced v/c Ratio	0.57	0.64		0.85	0.08	0.27	0.29

Intersection Summary	
Area Type:	Other
Cycle Length: 120	
Actuated Cycle Length: 120	
Offset: 19 (16%), Referenced to phase 2:EBT and 6:WBT, Start of Green	
Natural Cycle: 110	
Control Type: Actuated-Coordinated	
Maximum v/c Ratio: 0.77	

DocuSign Envelope ID: 5C03745C-4B01-4834-A65D-B77F558A4F46

Intersection Signal Delay: 13.7	Intersection LOS: B
Intersection Capacity Utilization 68.7%	ICU Level of Service C
Analysis Period (min) 15	

\# 95th percentile volume exceeds capacity, queue may be longer.
Queue shown is maximum after two cycles.
m Volume for 95th percentile queue is metered by upstream signal.

Splits and Phases: 1: NC 191 (Brevard Rd) & Commercial Access

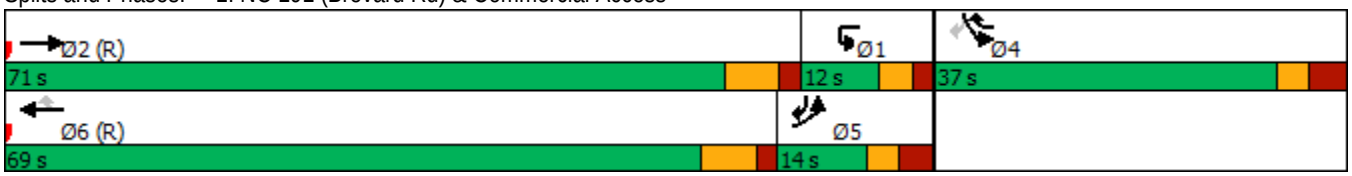

DocuSign Envelope ID: 5C03745C-4B01-4834-A65D-B77F558A4F46

Lane Group	EBT	EBR	WBL	WBT	NBL	NBR
Lane Configurations						
Traffic Volume (vph)	1334	241	181	1092	596	74
Future Volume (vph)	1334	241	181	1092	596	74
Ideal Flow (vphpl)	1900	1900	1900	1900	1900	1900
Grade (%)	-1%			-1%	0%	
Storage Length (ft)		225	200		0	0
Storage Lanes		1	1		2	1
Taper Length (ft)			25		25	
Lane Util. Factor	0.95	1.00	1.00	0.95	0.97	1.00
Frt		0.850				0.850
Flt Protected			0.950		0.950	
Satd. Flow (prot)	3423	1449	1620	3423	3303	1524
Flt Permitted			0.950		0.950	
Satd. Flow (perm)	3423	1449	1620	3423	3303	1524
Right Turn on Red		No				Yes
Satd. Flow (RTOR)						17
Link Speed (mph)	45			45	45	
Link Distance (ft)	558			1204	323	
Travel Time (s)	8.5			18.2	4.9	
Peak Hour Factor	0.90	0.90	0.90	0.90	0.90	0.90
Heavy Vehicles (%)	6%	12%	12%	6%	6%	6%
Adj. Flow (vph)	1482	268	201	1213	662	82
Shared Lane Traffic (%)						
Lane Group Flow (vph)	1482	268	201	1213	662	82
Enter Blocked Intersection	No	No	No	No	No	No
Lane Alignment	Left	Right	Left	Left	Left	Right
Median Width(ft)	12			12	40	
Link Offset(ft)	0			0	0	
Crosswalk Width(ft)	16			16	16	
Two way Left Turn Lane						
Headway Factor	0.99	0.99	0.99	0.99	1.00	1.00
Turning Speed (mph)		9	15		15	9
Number of Detectors	2	1	1	2	1	1
Detector Template	Thru	Right	Left	Thru	Left	Right
Leading Detector (ft)	100	20	20	100	20	20
Trailing Detector (ft)	0	0	0	0	0	0
Detector 1 Position(ft)	0	0	0	0	0	0
Detector 1 Size(ft)	6	20	20	6	20	20
Detector 1 Type	Cl+Ex	Cl+Ex	Cl+Ex	Cl+Ex	Cl+Ex	Cl+Ex
Detector 1 Channel						
Detector 1 Extend (s)	0.0	0.0	0.0	0.0	0.0	0.0
Detector 1 Queue (s)	0.0	0.0	0.0	0.0	0.0	0.0
Detector 1 Delay (s)	0.0	0.0	0.0	0.0	0.0	0.0
Detector 2 Position(ft)	94			94		
Detector 2 Size(ft)	6			6		
Detector 2 Type	Cl+Ex			Cl+Ex		
Detector 2 Channel						
Detector 2 Extend (s)	0.0			0.0		
Turn Type	NA	pm+ov	Prot	NA	Prot	pm+ov

DocuSign Envelope ID: 5C03745C-4B01-4834-A65D-B77F558A4F46



Lane Group	EBT	EBR	WBL	WBT	NBL	NBR
Protected Phases	2	4	1	6	4	1
Permitted Phases		2				4
Detector Phase	2	4	1	6	4	1
Switch Phase						
Minimum Initial (s)	12.0	7.0	10.0	12.0	7.0	10.0
Minimum Split (s)	18.0	13.9	16.3	18.6	13.9	16.3
Total Split (s)	63.0	33.0	24.0	87.0	33.0	24.0
Total Split (%)	52.5%	27.5%	20.0%	72.5%	27.5%	20.0%
Maximum Green (s)	57.0	26.1	17.7	80.4	26.1	17.7
Yellow Time (s)	4.4	3.0	3.0	4.7	3.0	3.0
All-Red Time (s)	1.6	3.9	3.3	1.9	3.9	3.3
Lost Time Adjust (s)	-1.0	-1.9	-1.3	-1.6	-1.9	-1.9
Total Lost Time (s)	5.0	5.0	5.0	5.0	5.0	4.4
Lead/Lag	Lag		Lead			Lead
Lead-Lag Optimize?	Yes		Yes			Yes
Vehicle Extension (s)	6.0	5.0	2.5	6.0	5.0	2.5
Minimum Gap (s)	3.0	0.2	0.2	3.0	0.2	0.2
Time Before Reduce (s)	15.0	0.0	0.0	15.0	0.0	0.0
Time To Reduce (s)	30.0	0.0	0.0	30.0	0.0	0.0
Recall Mode	C-Max	None	None	C-Max	None	None
Act Effct Green (s)	59.0	92.0	18.0	82.0	28.0	51.6
Actuated g/C Ratio	0.49	0.77	0.15	0.68	0.23	0.43
v/c Ratio	0.88	0.24	0.83	0.52	0.86	0.12
Control Delay	29.6	4.0	76.6	8.5	56.6	16.4
Queue Delay	1.5	0.0	0.0	0.0	0.0	0.0
Total Delay	31.0	4.0	76.6	8.6	56.6	16.4
LOS	C	A	E	A	E	B
Approach Delay	26.9			18.2	52.1	
Approach LOS	C			B	D	
Queue Length 50th (ft)	391	42	168	157	254	29
Queue Length 95th (ft)	415	59	#280	252	#348	61
Internal Link Dist (ft)	478			1124	243	
Turn Bay Length (ft)		225	200			
Base Capacity (vph)	1682	1110	256	2339	770	677
Starvation Cap Reductn	80	0	0	0	0	0
Spillback Cap Reductn	0	0	0	79	0	0
Storage Cap Reductn	0	0	0	0	0	0
Reduced v/c Ratio	0.93	0.24	0.79	0.54	0.86	0.12

Intersection Summary			
Area Type:	Other		
Cycle Length: 120			
Actuated Cycle Length: 120			
Offset: 110 (92%), Referenced to phase 2:EBT and 6:WBT, Start of Green			
Natural Cycle: 90			
Control Type: Actuated-Coordinated			
Maximum v/c Ratio: 0.88			
Intersection Signal Delay: 28.6		Intersection LOS: C	
Intersection Capacity Utilization 76.4%		ICU Level of Service D	

DocuSign Envelope ID: 5C03745C-4B01-4834-A65D-B77F558A4F46

Analysis Period (min) 15

\# 95th percentile volume exceeds capacity, queue may be longer.

Queue shown is maximum after two cycles.

Splits and Phases: 2: I-26 SEB Ramps & NC 191 (Brevard Rd)

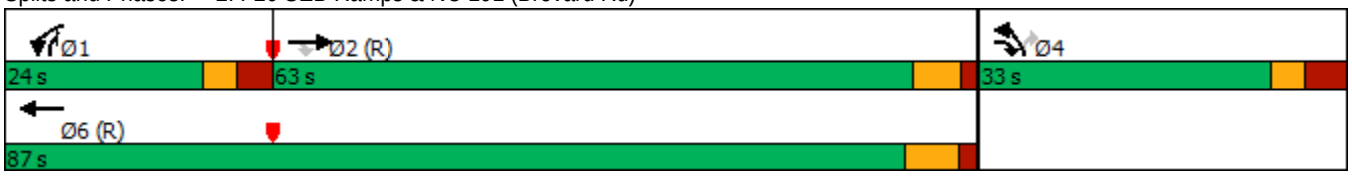

DocuSign Envelope ID: 5C03745C-4B01-4834-A65D-B77F558A4F46

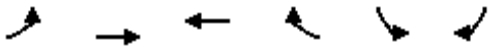

Lane Group	EBL	EBT	WBT	WBR	SBL	SBR
Lane Configurations						
Traffic Volume (vph)	439	969	978	48	249	295
Future Volume (vph)	439	969	978	48	249	295
Ideal Flow (vphpl)	1900	1900	1900	1900	1900	1900
Grade (%)		2%	-2%		2%	
Storage Length (ft)	625			200	0	400
Storage Lanes	2			1	2	1
Taper Length (ft)	25				25	
Lane Util. Factor	0.97	0.95	0.95	1.00	0.97	1.00
Frt				0.850		0.850
Flt Protected	0.950				0.950	
Satd. Flow (prot)	3095	3340	3408	1456	3240	1494
Flt Permitted	0.950				0.950	
Satd. Flow (perm)	3095	3340	3408	1456	3240	1494
Right Turn on Red				No		No
Satd. Flow (RTOR)						
Link Speed (mph)		45	45		45	
Link Distance (ft)		802	1565		860	
Travel Time (s)		12.2	23.7		13.0	
Peak Hour Factor	0.90	0.90	0.90	0.90	0.90	0.90
Heavy Vehicles (%)	12%	7%	7%	12%	7%	7%
Adj. Flow (vph)	488	1077	1087	53	277	328
Shared Lane Traffic (%)						
Lane Group Flow (vph)	488	1077	1087	53	277	328
Enter Blocked Intersection	No	No	No	No	No	No
Lane Alignment	Left	Left	Left	Right	Left	Right
Median Width(ft)		24	12		36	
Link Offset(ft)		0	0		0	
Crosswalk Width(ft)		16	16		16	
Two way Left Turn Lane						
Headway Factor	1.01	1.01	0.99	0.99	1.01	1.01
Turning Speed (mph)	15			9	15	9
Number of Detectors	1	2	2	1	1	1
Detector Template	Left	Thru	Thru	Right	Left	Right
Leading Detector (ft)	20	100	100	20	20	20
Trailing Detector (ft)	0	0	0	0	0	0
Detector 1 Position(ft)	0	0	0	0	0	0
Detector 1 Size(ft)	20	6	6	20	20	20
Detector 1 Type	Cl+Ex	Cl+Ex	Cl+Ex	Cl+Ex	Cl+Ex	Cl+Ex
Detector 1 Channel						
Detector 1 Extend (s)	0.0	0.0	0.0	0.0	0.0	0.0
Detector 1 Queue (s)	0.0	0.0	0.0	0.0	0.0	0.0
Detector 1 Delay (s)	0.0	0.0	0.0	0.0	0.0	0.0
Detector 2 Position(ft)		94	94			
Detector 2 Size(ft)		6	6			
Detector 2 Type		Cl+Ex	Cl+Ex			
Detector 2 Channel						
Detector 2 Extend (s)		0.0	0.0			
Turn Type	Prot	NA	NA	pm+ov	Prot	pm+ov

DocuSign Envelope ID: 5C03745C-4B01-4834-A65D-B77F558A4F46

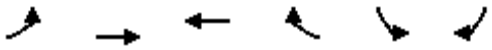

Lane Group	EBL	EBT	WBT	WBR	SBL	SBR
Protected Phases	5	2	6	4	4	5
Permitted Phases				6		4
Detector Phase	5	2	6	4	4	5
Switch Phase						
Minimum Initial (s)	7.0	12.0	12.0	7.0	7.0	7.0
Minimum Split (s)	14.0	19.0	25.0	25.0	25.0	14.0
Total Split (s)	34.0	95.0	61.0	25.0	25.0	34.0
Total Split (%)	28.3%	79.2%	50.8%	20.8%	20.8%	28.3%
Maximum Green (s)	27.0	88.0	54.0	18.0	18.0	27.0
Yellow Time (s)	5.0	5.0	5.0	5.0	5.0	5.0
All-Red Time (s)	2.0	2.0	2.0	2.0	2.0	2.0
Lost Time Adjust (s)	-2.0	-2.0	-2.0	-2.0	-2.0	-2.0
Total Lost Time (s)	5.0	5.0	5.0	5.0	5.0	5.0
Lead/Lag	Lag		Lead			Lag
Lead-Lag Optimize?	Yes		Yes			Yes
Vehicle Extension (s)	3.0	3.0	3.0	3.0	3.0	3.0
Minimum Gap (s)	0.2	3.0	3.0	0.2	0.2	0.2
Time Before Reduce (s)	0.0	15.0	15.0	0.0	0.0	0.0
Time To Reduce (s)	0.0	30.0	30.0	0.0	0.0	0.0
Recall Mode	None	C-Max	C-Max	None	None	None
Walk Time (s)			7.0	7.0	7.0	
Flash Dont Walk (s)			11.0	11.0	11.0	
Pedestrian Calls (#/hr)			0	0	0	
Act Effct Green (s)	29.0	92.9	58.9	81.0	17.1	51.1
Actuated g/C Ratio	0.24	0.77	0.49	0.68	0.14	0.43
v/c Ratio	0.65	0.42	0.65	0.05	0.60	0.52
Control Delay	15.5	1.2	25.6	6.8	53.6	28.4
Queue Delay	0.0	0.0	0.0	0.0	0.0	0.0
Total Delay	15.5	1.2	25.6	6.8	53.6	28.4
LOS	B	A	C	A	D	C
Approach Delay		5.7	24.7		39.9	
Approach LOS		A	C		D	
Queue Length 50th (ft)	144	23	324	13	104	182
Queue Length 95th (ft)	m150	m31	416	26	146	262
Internal Link Dist (ft)		722	1485		780	
Turn Bay Length (ft)	625			200		400
Base Capacity (vph)	747	2585	1672	964	540	636
Starvation Cap Reductn	0	0	0	0	0	0
Spillback Cap Reductn	0	0	0	0	0	0
Storage Cap Reductn	0	0	0	0	0	0
Reduced v/c Ratio	0.65	0.42	0.65	0.05	0.51	0.52

Intersection Summary	
Area Type:	Other
Cycle Length: 120	
Actuated Cycle Length: 120	
Offset: 108 (90%), Referenced to phase 2:EBT and 6:WBT, Start of Green	
Natural Cycle: 75	
Control Type: Actuated-Coordinated	

DocuSign Envelope ID: 5C03745C-4B01-4834-A65D-B77F558A4F46

Maximum v/c Ratio: 0.65	
Intersection Signal Delay: 18.5	Intersection LOS: B
Intersection Capacity Utilization 59.2%	ICU Level of Service B
Analysis Period (min) 15	

m Volume for 95th percentile queue is metered by upstream signal.

Splits and Phases: 3: NC 191 (Brevard Rd) & I-26 NWB Ramps

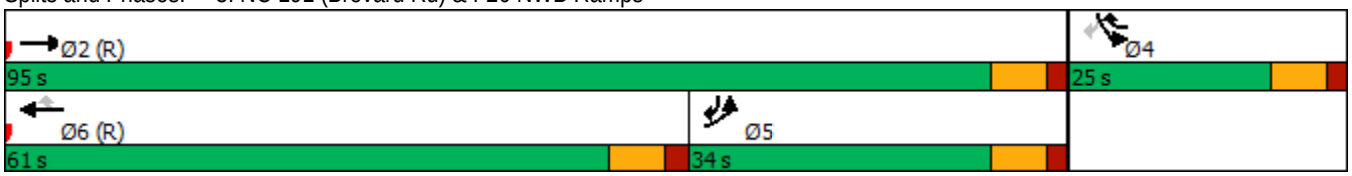

DocuSign Envelope ID: 5C03745C-4B01-4834-A65D-B77F558A4F46

Intersection	
Int Delay, s/veh	2.2

Movement	EBL	EBR	NBL	NBT	SBT	SBR
Lane Configurations						
Traffic Vol, veh/h	56	19	22	132	154	83
Future Vol, veh/h	56	19	22	132	154	83
Conflicting Peds, #/hr	0	0	0	0	0	0
Sign Control	Stop	Stop	Free	Free	Free	Free
RT Channelized	-	None	-	None	-	None
Storage Length	75	0	275	-	-	-
Veh in Median Storage, #	0	-	-	0	0	-
Grade, %	0	-	-	0	3	-
Peak Hour Factor	90	90	90	90	90	90
Heavy Vehicles, %	2	2	2	2	2	2
Mvmt Flow	62	21	24	147	171	92

Major/Minor	Minor2		Major1		Major2	
Conflicting Flow All	412	217	263	0	-	0
Stage 1	217	-	-	-	-	-
Stage 2	195	-	-	-	-	-
Critical Hdwy	6.42	6.22	4.12	-	-	-
Critical Hdwy Stg 1	5.42	-	-	-	-	-
Critical Hdwy Stg 2	5.42	-	-	-	-	-
Follow-up Hdwy	3.518	3.318	2.218	-	-	-
Pot Cap-1 Maneuver	596	823	1301	-	-	-
Stage 1	819	-	-	-	-	-
Stage 2	838	-	-	-	-	-
Platoon blocked, %				-	-	-
Mov Cap-1 Maneuver	585	823	1301	-	-	-
Mov Cap-2 Maneuver	585	-	-	-	-	-
Stage 1	804	-	-	-	-	-
Stage 2	838	-	-	-	-	-

Approach	EB	NB	SB
HCM Control Delay, s	11.3	1.1	0
HCM LOS	B		

Minor Lane/Major Mvmt	NBL	NBT	EBLn1	EBLn2	SBT	SBR
Capacity (veh/h)	1301	-	585	823	-	-
HCM Lane V/C Ratio	0.019	-	0.106	0.026	-	-
HCM Control Delay (s)	7.8	-	11.9	9.5	-	-
HCM Lane LOS	A	-	B	A	-	-
HCM 95th %tile Q(veh)	0.1	-	0.4	0.1	-	-

DocuSign Envelope ID: 5C03745C-4B01-4834-A65D-B77F558A4F46

Lane Group	EBL	EBT	EBR	WBL	WBT	WBR	NBL	NBT	NBR	SBL	SBT	SBR
Lane Configurations												
Traffic Volume (vph)	75	65	48	184	58	285	76	723	326	436	625	103
Future Volume (vph)	75	65	48	184	58	285	76	723	326	436	625	103
Ideal Flow (vphpl)	1900	1900	1900	1900	1900	1900	1900	1900	1900	1900	1900	1900
Grade (%)		3%			0%			2%			-7%	
Storage Length (ft)	0		0	300		0	150		250	250		0
Storage Lanes	1		0	1		1	1		1	2		0
Taper Length (ft)	25			25			25			25		
Lane Util. Factor	1.00	0.95	0.95	1.00	0.95	0.95	1.00	0.95	1.00	0.97	0.95	0.95
Frt		0.936			0.899	0.850			0.850		0.979	
Flt Protected	0.950			0.950			0.950			0.950		
Satd. Flow (prot)	1743	3263	0	1736	1560	1475	1686	3372	1508	3452	3484	0
Flt Permitted	0.950			0.950			0.950			0.950		
Satd. Flow (perm)	1743	3263	0	1736	1560	1475	1686	3372	1508	3452	3484	0
Right Turn on Red			No			No			No			No
Satd. Flow (RTOR)												
Link Speed (mph)		35			35			45			45	
Link Distance (ft)		248			1201			1589			1600	
Travel Time (s)		4.8			23.4			24.1			24.2	
Peak Hour Factor	0.90	0.90	0.90	0.90	0.90	0.90	0.90	0.90	0.90	0.90	0.90	0.90
Heavy Vehicles (%)	2%	2%	2%	4%	4%	4%	6%	6%	6%	5%	5%	5%
Adj. Flow (vph)	83	72	53	204	64	317	84	803	362	484	694	114
Shared Lane Traffic (%)						41%						
Lane Group Flow (vph)	83	125	0	204	194	187	84	803	362	484	808	0
Enter Blocked Intersection	No	No	No	No	No	No	No	No	No	No	No	No
Lane Alignment	L NA	Left	Right	Left	Left	Left	Left	L NA	Right	Left	Left	Right
Median Width(ft)		12			12			24			24	
Link Offset(ft)		0			0			0			0	
Crosswalk Width(ft)		16			16			16			16	
Two way Left Turn Lane												
Headway Factor	1.02	1.02	1.02	1.00	1.00	1.00	1.01	1.01	1.01	0.96	0.96	0.96
Turning Speed (mph)	15		9	15		9	15		9	15		9
Number of Detectors	1	2		1	2	1	1	2	1	1	2	
Detector Template	Left	Thru		Left	Thru	Right	Left	Thru	Right	Left	Thru	
Leading Detector (ft)	20	100		20	100	20	20	100	20	20	100	
Trailing Detector (ft)	0	0		0	0	0	0	0	0	0	0	
Detector 1 Position(ft)	0	0		0	0	0	0	0	0	0	0	
Detector 1 Size(ft)	20	6		20	6	20	20	6	20	20	6	
Detector 1 Type	Cl+Ex	Cl+Ex		Cl+Ex	Cl+Ex	Cl+Ex	Cl+Ex	Cl+Ex	Cl+Ex	Cl+Ex	Cl+Ex	
Detector 1 Channel												
Detector 1 Extend (s)	0.0	0.0		0.0	0.0	0.0	0.0	0.0	0.0	0.0	0.0	
Detector 1 Queue (s)	0.0	0.0		0.0	0.0	0.0	0.0	0.0	0.0	0.0	0.0	
Detector 1 Delay (s)	0.0	0.0		0.0	0.0	0.0	0.0	0.0	0.0	0.0	0.0	
Detector 2 Position(ft)		94			94			94			94	
Detector 2 Size(ft)		6			6			6			6	
Detector 2 Type		Cl+Ex			Cl+Ex			Cl+Ex			Cl+Ex	
Detector 2 Channel												
Detector 2 Extend (s)		0.0			0.0			0.0			0.0	
Turn Type	Prot	NA		Prot	NA	Perm	Prot	NA	pm+ov	Prot	NA	

DocuSign Envelope ID: 5C03745C-4B01-4834-A65D-B77F558A4F46

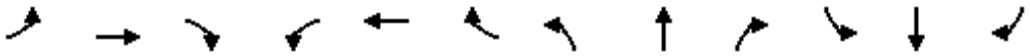

Lane Group	EBL	EBT	EBR	WBL	WBT	WBR	NBL	NBT	NBR	SBL	SBT	SBR
Protected Phases	7	4		3	8		5	2	3	1	6	
Permitted Phases						8			2			
Detector Phase	7	4		3	8	8	5	2	3	1	6	
Switch Phase												
Minimum Initial (s)	7.0	7.0		7.0	7.0	7.0	7.0	12.0	7.0	7.0	12.0	
Minimum Split (s)	14.0	14.0		14.0	14.0	14.0	14.0	19.0	14.0	14.0	19.0	
Total Split (s)	17.0	19.0		28.0	30.0	30.0	17.0	44.0	28.0	29.0	56.0	
Total Split (%)	14.2%	15.8%		23.3%	25.0%	25.0%	14.2%	36.7%	23.3%	24.2%	46.7%	
Maximum Green (s)	10.0	12.0		21.0	23.0	23.0	10.0	37.0	21.0	22.0	49.0	
Yellow Time (s)	5.0	5.0		5.0	5.0	5.0	5.0	5.0	5.0	5.0	5.0	
All-Red Time (s)	2.0	2.0		2.0	2.0	2.0	2.0	2.0	2.0	2.0	2.0	
Lost Time Adjust (s)	-2.0	-2.0		-2.0	-2.0	-2.0	-2.0	-2.0	-2.0	-2.0	-2.0	
Total Lost Time (s)	5.0	5.0		5.0	5.0	5.0	5.0	5.0	5.0	5.0	5.0	
Lead/Lag	Lead	Lag		Lead	Lag	Lag	Lead	Lag	Lead	Lead	Lag	
Lead-Lag Optimize?	Yes	Yes		Yes	Yes	Yes	Yes	Yes	Yes	Yes	Yes	
Vehicle Extension (s)	3.0	3.0		3.0	3.0	3.0	3.0	3.0	3.0	3.0	3.0	
Minimum Gap (s)	3.0	3.0		3.0	3.0	3.0	3.0	3.0	3.0	3.0	3.0	
Time Before Reduce (s)	0.0	0.0		0.0	0.0	0.0	0.0	15.0	0.0	0.0	15.0	
Time To Reduce (s)	0.0	0.0		0.0	0.0	0.0	0.0	30.0	0.0	0.0	30.0	
Recall Mode	None	None		None	None	None	None	Min	None	None	Min	
Act Effct Green (s)	11.2	12.3		18.9	23.7	23.7	11.3	32.7	56.8	21.1	46.3	
Actuated g/C Ratio	0.11	0.12		0.18	0.22	0.22	0.11	0.31	0.54	0.20	0.44	
v/c Ratio	0.45	0.33		0.66	0.55	0.56	0.47	0.77	0.45	0.70	0.53	
Control Delay	57.0	48.5		53.1	47.1	48.0	57.9	39.3	17.1	47.0	24.9	
Queue Delay	0.0	0.0		0.0	0.0	0.0	0.0	0.0	0.0	0.0	0.0	
Total Delay	57.0	48.5		53.1	47.1	48.0	57.9	39.3	17.1	47.0	24.9	
LOS	E	D		D	D	D	E	D	B	D	C	
Approach Delay		51.9			49.5			34.1			33.2	
Approach LOS		D			D			C			C	
Queue Length 50th (ft)	57	44		137	135	131	57	271	149	166	228	
Queue Length 95th (ft)	115	78		229	229	224	117	363	230	240	304	
Internal Link Dist (ft)		168			1121			1509			1520	
Turn Bay Length (ft)				300			150		250	250		
Base Capacity (vph)	203	443		387	384	363	196	1277	877	804	1725	
Starvation Cap Reductn	0	0		0	0	0	0	0	0	0	0	
Spillback Cap Reductn	0	0		0	0	0	0	0	0	0	0	
Storage Cap Reductn	0	0		0	0	0	0	0	0	0	0	
Reduced v/c Ratio	0.41	0.28		0.53	0.51	0.52	0.43	0.63	0.41	0.60	0.47	

Intersection Summary			
Area Type:	Other		
Cycle Length: 120			
Actuated Cycle Length: 105.5			
Natural Cycle: 70			
Control Type: Actuated-Uncoordinated			
Maximum v/c Ratio: 0.77			
Intersection Signal Delay: 37.5		Intersection LOS: D	
Intersection Capacity Utilization 65.1%		ICU Level of Service C	
Analysis Period (min) 15			

DocuSign Envelope ID: 5C03745C-4B01-4834-A65D-B77F558A4F46

Splits and Phases: 5: NC 191 (Brevard Rd) & Blue Ridge Pkwy Access

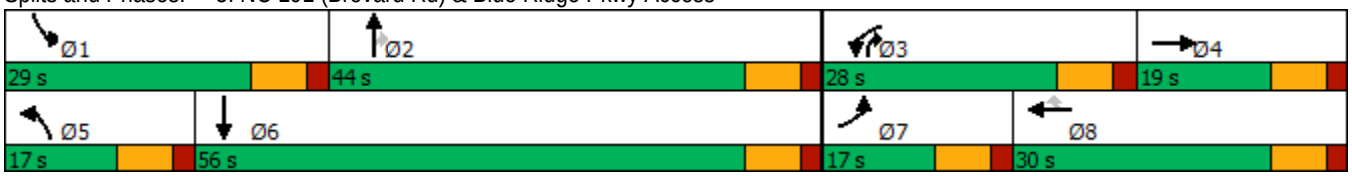

DocuSign Envelope ID: 5C03745C-4B01-4834-A65D-B77F558A4F46

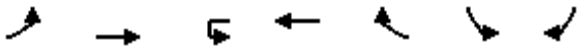

Lane Group	EBL	EBT	WBU	WBT	WBR	SBL	SBR
Lane Configurations							
Traffic Volume (vph)	41	672	0	707	530	668	54
Future Volume (vph)	41	672	0	707	530	668	54
Ideal Flow (vphpl)	1900	1900	1900	1900	1900	1900	1900
Grade (%)		-9%		5%		-9%	
Storage Length (ft)	500		350		0	0	400
Storage Lanes	1		1		1	2	1
Taper Length (ft)	25		25			25	
Lane Util. Factor	1.00	1.00	1.00	1.00	1.00	0.97	1.00
Frt					0.850		0.850
Flt Protected	0.950					0.950	
Satd. Flow (prot)	1715	1805	1715	1715	1458	3485	1607
Flt Permitted	0.950					0.950	
Satd. Flow (perm)	1715	1805	1715	1715	1458	3485	1607
Right Turn on Red					No		No
Satd. Flow (RTOR)							
Link Speed (mph)		35		35		45	
Link Distance (ft)		1579		1808		1089	
Travel Time (s)		30.8		35.2		16.5	
Peak Hour Factor	0.90	0.90	0.90	0.90	0.90	0.90	0.90
Heavy Vehicles (%)	10%	10%	8%	8%	8%	5%	5%
Adj. Flow (vph)	46	747	0	786	589	742	60
Shared Lane Traffic (%)							
Lane Group Flow (vph)	46	747	0	786	589	742	60
Enter Blocked Intersection	No	No	No	No	No	No	No
Lane Alignment	Left	Left	R NA	Left	Right	Left	Right
Median Width(ft)		12		12		24	
Link Offset(ft)		0		0		0	
Crosswalk Width(ft)		16		16		16	
Two way Left Turn Lane							
Headway Factor	0.94	0.94	1.03	1.03	1.03	0.94	0.94
Turning Speed (mph)	15		9		9	15	9
Number of Detectors	1	2	1	2	1	1	1
Detector Template	Left	Thru	Left	Thru	Right	Left	Right
Leading Detector (ft)	20	100	20	100	20	20	20
Trailing Detector (ft)	0	0	0	0	0	0	0
Detector 1 Position(ft)	0	0	0	0	0	0	0
Detector 1 Size(ft)	20	6	20	6	20	20	20
Detector 1 Type	Cl+Ex	Cl+Ex	Cl+Ex	Cl+Ex	Cl+Ex	Cl+Ex	Cl+Ex
Detector 1 Channel							
Detector 1 Extend (s)	0.0	0.0	0.0	0.0	0.0	0.0	0.0
Detector 1 Queue (s)	0.0	0.0	0.0	0.0	0.0	0.0	0.0
Detector 1 Delay (s)	0.0	0.0	0.0	0.0	0.0	0.0	0.0
Detector 2 Position(ft)		94		94			
Detector 2 Size(ft)		6		6			
Detector 2 Type		Cl+Ex		Cl+Ex			
Detector 2 Channel							
Detector 2 Extend (s)		0.0		0.0			
Turn Type	Prot	NA	Prot	NA	pm+ov	Prot	pm+ov

DocuSign Envelope ID: 5C03745C-4B01-4834-A65D-B77F558A4F46

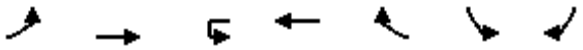

Lane Group	EBL	EBT	WBU	WBT	WBR	SBL	SBR
Protected Phases	5	2	1	6	4	4	5
Permitted Phases					6		4
Detector Phase	5	2	1	6	4	4	5
Switch Phase							
Minimum Initial (s)	7.0	10.0	7.0	10.0	7.0	7.0	7.0
Minimum Split (s)	13.7	17.3	13.3	17.3	13.8	13.8	13.7
Total Split (s)	14.0	91.7	13.3	91.0	45.0	45.0	14.0
Total Split (%)	9.3%	61.1%	8.9%	60.7%	30.0%	30.0%	9.3%
Maximum Green (s)	7.3	84.4	7.0	83.7	38.2	38.2	7.3
Yellow Time (s)	3.3	4.6	3.0	4.6	3.3	3.3	3.3
All-Red Time (s)	3.4	2.7	3.3	2.7	3.5	3.5	3.4
Lost Time Adjust (s)	-1.7	-2.3	-1.3	-2.3	-2.3	-1.8	-1.8
Total Lost Time (s)	5.0	5.0	5.0	5.0	4.5	5.0	4.9
Lead/Lag	Lead	Lead	Lag	Lag			Lead
Lead-Lag Optimize?	Yes	Yes	Yes	Yes			Yes
Vehicle Extension (s)	2.0	3.0	2.0	3.0	3.0	3.0	2.0
Recall Mode	None	C-Max	None	C-Max	None	None	None
Act Effct Green (s)	8.9	102.0		90.9	135.3	38.0	52.0
Actuated g/C Ratio	0.06	0.68		0.61	0.90	0.25	0.35
v/c Ratio	0.46	0.61		0.76	0.45	0.84	0.11
Control Delay	83.1	16.1		21.1	2.9	62.7	33.1
Queue Delay	0.0	0.0		0.0	0.0	0.0	0.0
Total Delay	83.1	16.1		21.1	2.9	62.7	33.1
LOS	F	B		C	A	E	C
Approach Delay		20.0		13.3		60.5	
Approach LOS		C		B		E	
Queue Length 50th (ft)	44	390		486	52	351	39
Queue Length 95th (ft)	90	514		699	101	429	74
Internal Link Dist (ft)		1499		1728		1009	
Turn Bay Length (ft)	500						400
Base Capacity (vph)	102	1227		1039	1320	929	557
Starvation Cap Reductn	0	0		0	0	0	0
Spillback Cap Reductn	0	0		0	0	0	0
Storage Cap Reductn	0	0		0	0	0	0
Reduced v/c Ratio	0.45	0.61		0.76	0.45	0.80	0.11

Intersection Summary			
Area Type:	Other		
Cycle Length: 150			
Actuated Cycle Length: 150			
Offset: 46 (31%), Referenced to phase 2:EBT and 6:WBT, Start of Green			
Natural Cycle: 90			
Control Type: Actuated-Coordinated			
Maximum v/c Ratio: 0.84			
Intersection Signal Delay: 27.8		Intersection LOS: C	
Intersection Capacity Utilization 64.6%		ICU Level of Service C	
Analysis Period (min) 15			

DocuSign Envelope ID: 5C03745C-4B01-4834-A65D-B77F558A4F46

Splits and Phases: 8: NC 146 (Long Shoals Rd) & Clayton Rd

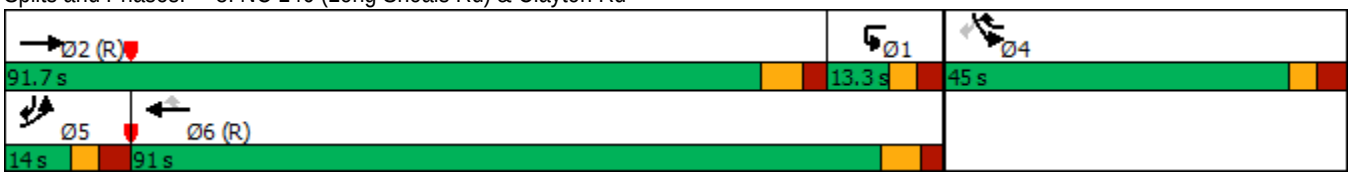

DocuSign Envelope ID: 5C03745C-4B01-4834-A65D-B77F558A4F46

Intersection	
Int Delay, s/veh	82.4

Movement	EBU	EBT	EBR	WBL	WBT	NBL	NBR
Lane Configurations							
Traffic Vol, veh/h	0	1245	26	211	1258	53	478
Future Vol, veh/h	0	1245	26	211	1258	53	478
Conflicting Peds, #/hr	0	0	0	0	0	0	0
Sign Control	Free	Free	Free	Free	Free	Stop	Stop
RT Channelized	-	-	None	-	None	-	Stop
Storage Length	325	-	-	325	-	200	0
Veh in Median Storage, #	-	0	-	-	0	0	-
Grade, %	-	0	-	-	0	0	-
Peak Hour Factor	90	90	90	90	90	90	90
Heavy Vehicles, %	8	8	8	8	8	3	3
Mvmt Flow	0	1383	29	234	1398	59	531

Major/Minor	Major1			Major2		Minor1	
Conflicting Flow All	1398	0	0	1412	0	2565	706
Stage 1	-	-	-	-	-	1398	-
Stage 2	-	-	-	-	-	1167	-
Critical Hdwy	6.56	-	-	4.26	-	6.86	6.96
Critical Hdwy Stg 1	-	-	-	-	-	5.86	-
Critical Hdwy Stg 2	-	-	-	-	-	5.86	-
Follow-up Hdwy	2.58	-	-	2.28	-	3.53	3.33
Pot Cap-1 Maneuver	173	-	-	449	-	~ 21	~ 376
Stage 1	-	-	-	-	-	192	-
Stage 2	-	-	-	-	-	256	-
Platoon blocked, %		-	-		-		
Mov Cap-1 Maneuver	173	-	-	449	-	~ 10	~ 376
Mov Cap-2 Maneuver	-	-	-	-	-	~ 10	-
Stage 1	-	-	-	-	-	192	-
Stage 2	-	-	-	-	-	123	-

Approach	EB	WB	NB
HCM Control Delay, s	0	3.1	$ 498.8
HCM LOS			F

Minor Lane/Major Mvmt	NBLn1	NBLn2	EBU	EBT	EBR	WBL	WBT
Capacity (veh/h)	10	376	173	-	-	449	-
HCM Lane V/C Ratio	5.889	1.413	-	-	-	0.522	-
HCM Control Delay (s)	$ 2936.1	228.6	0	-	-	21.4	-
HCM Lane LOS	F	F	A	-	-	C	-
HCM 95th %tile Q(veh)	8.7	26.8	0	-	-	3	-

Notes			
~: Volume exceeds capacity	$: Delay exceeds 300s	+: Computation Not Defined	*: All major volume in platoon

DocuSign Envelope ID: 5C03745C-4B01-4834-A65D-B77F558A4F46

Lane Group	EBL	EBT	EBR2	WBL	WBT	SEL	SER2	NWL
Lane Configurations								
Traffic Volume (vph)	230	1219	274	389	812	1033	288	369
Future Volume (vph)	230	1219	274	389	812	1033	288	369
Ideal Flow (vphpl)	1900	1900	1900	1900	1900	1900	1900	1900
Grade (%)		3%			-7%			
Storage Length (ft)	475			0		0		0
Storage Lanes	2			2		2		2
Taper Length (ft)	25			25		25		25
Lane Util. Factor	0.97	0.95	1.00	0.97	0.95	0.97	1.00	0.97
Frt			0.850				0.850	
Flt Protected	0.950			0.950		0.950		0.950
Satd. Flow (prot)	3080	3292	1420	3236	3593	3434	1525	3291
Flt Permitted	0.950			0.950		0.950		0.950
Satd. Flow (perm)	3080	3292	1420	3236	3593	3434	1525	3291
Right Turn on Red			Yes				Yes	
Satd. Flow (RTOR)			228				228	
Link Speed (mph)		45			45			
Link Distance (ft)		1000			418			
Travel Time (s)		15.2			6.3			
Peak Hour Factor	0.90	0.90	0.90	0.90	0.90	0.90	0.90	0.90
Heavy Vehicles (%)	12%	8%	12%	12%	4%	4%	8%	8%
Adj. Flow (vph)	256	1354	304	432	902	1148	320	410
Shared Lane Traffic (%)								
Lane Group Flow (vph)	256	1354	304	432	902	1148	320	410
Enter Blocked Intersection	No	No	No	No	No	No	No	No
Lane Alignment	Left	Left	Right	Left	Left	Left	Right	Left
Median Width(ft)		24			24			
Link Offset(ft)		0			0			
Crosswalk Width(ft)		16			16			
Two way Left Turn Lane								
Headway Factor	1.02	1.02	1.02	0.96	0.96	0.97	0.97	0.98
Turning Speed (mph)	15		9	15		15	9	15
Number of Detectors	1	2	1	1	2	1	1	1
Detector Template	Left	Thru	Right	Left	Thru	Left	Right	Left
Leading Detector (ft)	20	100	20	20	100	20	20	20
Trailing Detector (ft)	0	0	0	0	0	0	0	0
Detector 1 Position(ft)	0	0	0	0	0	0	0	0
Detector 1 Size(ft)	20	6	20	20	6	20	20	20
Detector 1 Type	Cl+Ex	Cl+Ex	Cl+Ex	Cl+Ex	Cl+Ex	Cl+Ex	Cl+Ex	Cl+Ex
Detector 1 Channel								
Detector 1 Extend (s)	0.0	0.0	0.0	0.0	0.0	0.0	0.0	0.0
Detector 1 Queue (s)	0.0	0.0	0.0	0.0	0.0	0.0	0.0	0.0
Detector 1 Delay (s)	0.0	0.0	0.0	0.0	0.0	0.0	0.0	0.0
Detector 2 Position(ft)		94			94			
Detector 2 Size(ft)		6			6			
Detector 2 Type		Cl+Ex			Cl+Ex			
Detector 2 Channel								
Detector 2 Extend (s)		0.0			0.0			
Turn Type	Prot	NA	Free	Prot	NA	Prot	Free	Prot

DocuSign Envelope ID: 5C03745C-4B01-4834-A65D-B77F558A4F46

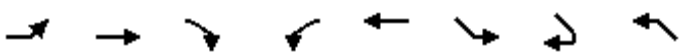

Lane Group	EBL	EBT	EBR2	WBL	WBT	SEL	SER2	NWL
Protected Phases	5	2		1	6	4		8
Permitted Phases			Free				Free	
Detector Phase	5	2		1	6	4		8
Switch Phase								
Minimum Initial (s)	7.0	12.0		7.0	12.0	7.0		7.0
Minimum Split (s)	15.3	21.0		14.5	21.0	15.0		15.0
Total Split (s)	24.7	76.0		37.0	88.3	37.0		37.0
Total Split (%)	16.5%	50.7%		24.7%	58.9%	24.7%		24.7%
Maximum Green (s)	16.4	67.0		29.5	79.3	29.0		29.0
Yellow Time (s)	3.1	5.2		3.6	5.2	3.5		3.5
All-Red Time (s)	5.2	3.8		3.9	3.8	4.5		4.5
Lost Time Adjust (s)	-3.3	-4.0		-2.5	-4.0	-3.0		-3.0
Total Lost Time (s)	5.0	5.0		5.0	5.0	5.0		5.0
Lead/Lag	Lag	Lead		Lag	Lead			
Lead-Lag Optimize?	Yes	Yes		Yes	Yes			
Vehicle Extension (s)	2.0	6.0		2.0	6.0	2.0		2.0
Minimum Gap (s)	0.2	3.0		0.2	3.0	0.2		0.2
Time Before Reduce (s)	0.0	15.0		0.0	15.0	0.0		0.0
Time To Reduce (s)	0.0	30.0		0.0	30.0	0.0		0.0
Recall Mode	None	C-Max		None	C-Max	None		None
Act Effct Green (s)	19.7	71.0	150.0	32.0	83.3	32.0	150.0	32.0
Actuated g/C Ratio	0.13	0.47	1.00	0.21	0.56	0.21	1.00	0.21
v/c Ratio	0.63	0.87	0.21	0.63	0.45	1.57	0.21	0.58
Control Delay	61.6	35.0	0.3	46.7	10.7	300.2	0.3	56.9
Queue Delay	0.0	47.6	0.0	0.0	0.7	7.1	0.0	0.0
Total Delay	61.6	82.7	0.3	46.7	11.3	307.3	0.3	56.9
LOS	E	F	A	D	B	F	A	E
Approach Delay		66.8			22.8			
Approach LOS		E			C			
Queue Length 50th (ft)	122	417	0	208	123	~817	0	187
Queue Length 95th (ft)	m168	551	m0	271	132	#954	0	245
Internal Link Dist (ft)		920			338			
Turn Bay Length (ft)	475							
Base Capacity (vph)	404	1558	1420	690	1995	732	1525	702
Starvation Cap Reductn	0	0	0	0	675	0	0	0
Spillback Cap Reductn	0	454	0	0	0	413	0	0
Storage Cap Reductn	0	0	0	0	0	0	0	0
Reduced v/c Ratio	0.63	1.23	0.21	0.63	0.68	3.60	0.21	0.58

Intersection Summary			
Area Type:	Other		
Cycle Length: 150			
Actuated Cycle Length: 150			
Offset: 0 (0%), Referenced to phase 2:EBT and 6:WBT, Start of Green, Master Intersection			
Natural Cycle: 150			
Control Type: Actuated-Coordinated			
Maximum v/c Ratio: 1.62			
Intersection Signal Delay: 104.3		Intersection LOS: F	
Intersection Capacity Utilization 86.8%		ICU Level of Service E	

DocuSign Envelope ID: 5C03745C-4B01-4834-A65D-B77F558A4F46

Analysis Period (min) 15

~ Volume exceeds capacity, queue is theoretically infinite.
Queue shown is maximum after two cycles.

95th percentile volume exceeds capacity, queue may be longer.
Queue shown is maximum after two cycles.

m Volume for 95th percentile queue is metered by upstream signal.

Splits and Phases: 10: I-26 Ramp & NC 146 (Long Shoals Rd)

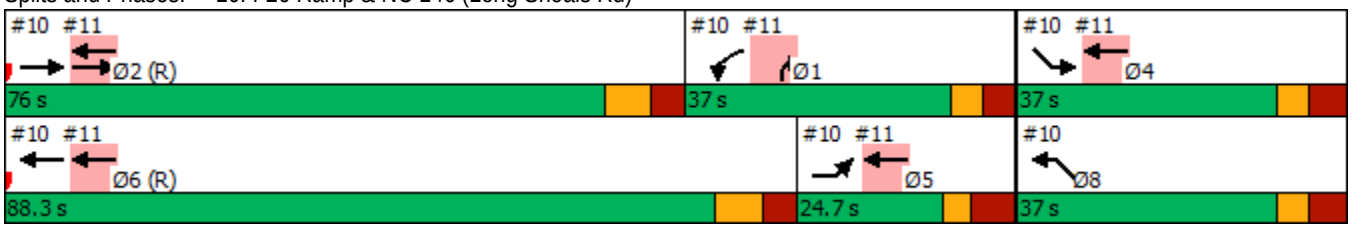

DocuSign Envelope ID: 5C03745C-4B01-4834-A65D-B77F558A4F46

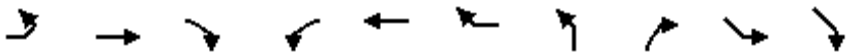

Lane Group	EBL	EBT	EBR	WBL	WBT	WBR	NBL	NBR	SEL	SER	Ø4	Ø5
Lane Configurations												
Traffic Volume (vph)	0	2252	0	0	1201	548	0	785	0	0		
Future Volume (vph)	0	2252	0	0	1201	548	0	785	0	0		
Ideal Flow (vphpl)	1900	1900	1900	1900	1900	1900	1900	1900	1900	1900		
Storage Length (ft)	0		0	0		275	0	0	0	0		
Storage Lanes	0		0	0		1	0	2	0	0		
Taper Length (ft)	25			25			25		25			
Lane Util. Factor	1.00	0.95	1.00	1.00	0.95	1.00	1.00	0.88	1.00	1.00		
Frt						0.850		0.850				
Flt Protected												
Satd. Flow (prot)	0	3471	0	0	3471	1442	0	2733	0	0		
Flt Permitted												
Satd. Flow (perm)	0	3471	0	0	3471	1442	0	2733	0	0		
Right Turn on Red			No			No		No				
Satd. Flow (RTOR)												
Link Speed (mph)		45			45		45		45			
Link Distance (ft)		418			593		396		464			
Travel Time (s)		6.3			9.0		6.0		7.0			
Peak Hour Factor	0.90	0.90	0.90	0.90	0.90	0.90	0.90	0.90	0.90	0.90		
Heavy Vehicles (%)	2%	4%	2%	2%	4%	12%	2%	4%	2%	2%		
Adj. Flow (vph)	0	2502	0	0	1334	609	0	872	0	0		
Shared Lane Traffic (%)												
Lane Group Flow (vph)	0	2502	0	0	1334	609	0	872	0	0		
Enter Blocked Intersection	No	No	No	No	No	No	No	No	No	No		
Lane Alignment	Left	L NA	Right	Left	Right	Right	Left	R NA	Left	Right		
Median Width(ft)		0			24		0		0			
Link Offset(ft)		0			0		0		0			
Crosswalk Width(ft)		16			16		16		16			
Two way Left Turn Lane												
Headway Factor	1.00	1.00	1.00	1.00	1.00	1.00	1.00	1.00	1.00	1.00		
Turning Speed (mph)	15		9	15		9	15	9	15	9		
Number of Detectors		2			2	1		1				
Detector Template		Thru			Thru	Right		Right				
Leading Detector (ft)		100			100	20		20				
Trailing Detector (ft)		0			0	0		0				
Detector 1 Position(ft)		0			0	0		0				
Detector 1 Size(ft)		6			6	20		20				
Detector 1 Type		Cl+Ex			Cl+Ex	Cl+Ex		Cl+Ex				
Detector 1 Channel												
Detector 1 Extend (s)		0.0			0.0	0.0		0.0				
Detector 1 Queue (s)		0.0			0.0	0.0		0.0				
Detector 1 Delay (s)		0.0			0.0	0.0		0.0				
Detector 2 Position(ft)		94			94							
Detector 2 Size(ft)		6			6							
Detector 2 Type		Cl+Ex			Cl+Ex							
Detector 2 Channel												
Detector 2 Extend (s)		0.0			0.0							
Turn Type		NA			NA	Free		Prot				
Protected Phases		2			2 4 5 6			1			4	5

DocuSign Envelope ID: 5C03745C-4B01-4834-A65D-B77F558A4F46

Lane Group	Ø6	Ø8
Lane Configurations		
Traffic Volume (vph)		
Future Volume (vph)		
Ideal Flow (vphpl)		
Storage Length (ft)		
Storage Lanes		
Taper Length (ft)		
Lane Util. Factor		
Frt		
Flt Protected		
Satd. Flow (prot)		
Flt Permitted		
Satd. Flow (perm)		
Right Turn on Red		
Satd. Flow (RTOR)		
Link Speed (mph)		
Link Distance (ft)		
Travel Time (s)		
Peak Hour Factor		
Heavy Vehicles (%)		
Adj. Flow (vph)		
Shared Lane Traffic (%)		
Lane Group Flow (vph)		
Enter Blocked Intersection		
Lane Alignment		
Median Width(ft)		
Link Offset(ft)		
Crosswalk Width(ft)		
Two way Left Turn Lane		
Headway Factor		
Turning Speed (mph)		
Number of Detectors		
Detector Template		
Leading Detector (ft)		
Trailing Detector (ft)		
Detector 1 Position(ft)		
Detector 1 Size(ft)		
Detector 1 Type		
Detector 1 Channel		
Detector 1 Extend (s)		
Detector 1 Queue (s)		
Detector 1 Delay (s)		
Detector 2 Position(ft)		
Detector 2 Size(ft)		
Detector 2 Type		
Detector 2 Channel		
Detector 2 Extend (s)		
Turn Type		
Protected Phases	6	8

DocuSign Envelope ID: 5C03745C-4B01-4834-A65D-B77F558A4F46

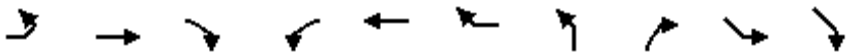

Lane Group	EBL	EBT	EBR	WBL	WBT	WBR	NBL	NBR	SEL	SER	Ø4	Ø5
Permitted Phases						Free						
Detector Phase		2			2 4 5 6			1				
Switch Phase												
Minimum Initial (s)		12.0						7.0			7.0	7.0
Minimum Split (s)		21.0						14.5			15.0	15.3
Total Split (s)		76.0						37.0			37.0	24.7
Total Split (%)		50.7%						24.7%			25%	16%
Maximum Green (s)		67.0						29.5			29.0	16.4
Yellow Time (s)		5.2						3.6			3.5	3.1
All-Red Time (s)		3.8						3.9			4.5	5.2
Lost Time Adjust (s)		0.0						0.0				
Total Lost Time (s)		9.0						7.5				
Lead/Lag		Lead						Lag				Lag
Lead-Lag Optimize?		Yes						Yes				Yes
Vehicle Extension (s)		6.0						2.0			2.0	2.0
Minimum Gap (s)		3.0						0.2			0.2	0.2
Time Before Reduce (s)		15.0						0.0			0.0	0.0
Time To Reduce (s)		30.0						0.0			0.0	0.0
Recall Mode		C-Max						None			None	None
Act Effct Green (s)		67.0			150.0	150.0		29.5				
Actuated g/C Ratio		0.45			1.00	1.00		0.20				
v/c Ratio		1.61			0.38	0.42		1.62				
Control Delay		300.6			0.1	0.3		326.2				
Queue Delay		1.4			0.0	0.0		2.1				
Total Delay		302.0			0.1	0.3		328.3				
LOS		F			A	A		F				
Approach Delay		302.0			0.2		328.3					
Approach LOS		F			A		F					
Queue Length 50th (ft)		~1864			0	0		~695				
Queue Length 95th (ft)		m#1470			m0	m0		#841				
Internal Link Dist (ft)		338			513		316		384			
Turn Bay Length (ft)						275						
Base Capacity (vph)		1550			3471	1442		537				
Starvation Cap Reductn		59			0	0		0				
Spillback Cap Reductn		461			0	0		114				
Storage Cap Reductn		0			0	0		0				
Reduced v/c Ratio		2.30			0.38	0.42		2.06				

Intersection Summary			
Area Type:	Other		
Cycle Length: 150			
Actuated Cycle Length: 150			
Offset: 0 (0%), Referenced to phase 2:EBT and 6:WBT, Start of Green, Master Intersection			
Natural Cycle: 150			
Control Type: Actuated-Coordinated			
Maximum v/c Ratio: 1.62			
Intersection Signal Delay: 196.0		Intersection LOS: F	
Intersection Capacity Utilization 103.5%		ICU Level of Service G	
Analysis Period (min) 15			

DocuSign Envelope ID: 5C03745C-4B01-4834-A65D-B77F558A4F46

Lane Group	Ø6	Ø8
Permitted Phases		
Detector Phase		
Switch Phase		
Minimum Initial (s)	12.0	7.0
Minimum Split (s)	21.0	15.0
Total Split (s)	88.3	37.0
Total Split (%)	59%	25%
Maximum Green (s)	79.3	29.0
Yellow Time (s)	5.2	3.5
All-Red Time (s)	3.8	4.5
Lost Time Adjust (s)		
Total Lost Time (s)		
Lead/Lag	Lead	
Lead-Lag Optimize?	Yes	
Vehicle Extension (s)	6.0	2.0
Minimum Gap (s)	3.0	0.2
Time Before Reduce (s)	15.0	0.0
Time To Reduce (s)	30.0	0.0
Recall Mode	C-Max	None
Act Effct Green (s)		
Actuated g/C Ratio		
v/c Ratio		
Control Delay		
Queue Delay		
Total Delay		
LOS		
Approach Delay		
Approach LOS		
Queue Length 50th (ft)		
Queue Length 95th (ft)		
Internal Link Dist (ft)		
Turn Bay Length (ft)		
Base Capacity (vph)		
Starvation Cap Reductn		
Spillback Cap Reductn		
Storage Cap Reductn		
Reduced v/c Ratio		

Intersection Summary

DocuSign Envelope ID: 5C03745C-4B01-4834-A65D-B77F558A4F46

~ Volume exceeds capacity, queue is theoretically infinite.
Queue shown is maximum after two cycles.

95th percentile volume exceeds capacity, queue may be longer.
Queue shown is maximum after two cycles.

m Volume for 95th percentile queue is metered by upstream signal.

Splits and Phases: 11: I-26 NWB Ramp & NC 146 (Long Shoals Rd)

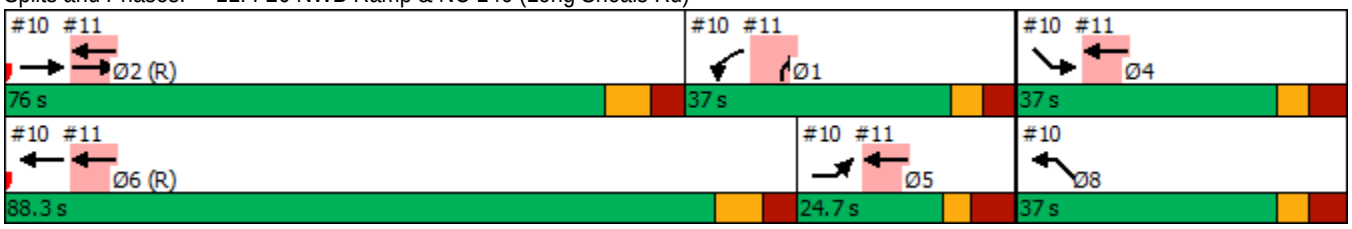

DocuSign Envelope ID: 5C03745C-4B01-4834-A65D-B77F558A4F46

Lane Group	EBL	EBT	EBR	WBL	WBT	WBR	NBL	NBT	NBR	SBL	SBT	SBR
Lane Configurations												
Traffic Volume (vph)	856	2039	142	26	1222	391	51	27	15	357	43	476
Future Volume (vph)	856	2039	142	26	1222	391	51	27	15	357	43	476
Ideal Flow (vphpl)	1900	1900	1900	1900	1900	1900	1900	1900	1900	1900	1900	1900
Grade (%)		6%			-6%			11%			7%	
Storage Length (ft)	350		400	250		225	0		0	450		0
Storage Lanes	2		1	1		1	0		0	1		1
Taper Length (ft)	25			25			25			25		
Lane Util. Factor	0.97	0.95	1.00	1.00	0.95	1.00	1.00	1.00	1.00	0.95	0.95	1.00
Frt			0.850			0.850		0.978				0.850
Flt Protected	0.950			0.950				0.973		0.950	0.962	
Satd. Flow (prot)	3266	3367	1506	1788	3575	1599	0	1627	0	1561	1581	1470
Flt Permitted	0.950			0.950				0.973		0.950	0.962	
Satd. Flow (perm)	3266	3367	1506	1788	3575	1599	0	1627	0	1561	1581	1470
Right Turn on Red			No			No			No			No
Satd. Flow (RTOR)												
Link Speed (mph)		45			45			25			25	
Link Distance (ft)		593			1582			722			992	
Travel Time (s)		9.0			24.0			19.7			27.1	
Peak Hour Factor	0.90	0.90	0.90	0.90	0.90	0.90	0.90	0.90	0.90	0.90	0.90	0.90
Heavy Vehicles (%)	4%	4%	4%	4%	4%	4%	5%	5%	5%	6%	6%	6%
Adj. Flow (vph)	951	2266	158	29	1358	434	57	30	17	397	48	529
Shared Lane Traffic (%)										44%		
Lane Group Flow (vph)	951	2266	158	29	1358	434	0	104	0	222	223	529
Enter Blocked Intersection	No	No	No	No	No	No	No	No	No	No	No	No
Lane Alignment	Left	Left	Right	Left	Left	Right	Left	Left	Right	Left	Left	Right
Median Width(ft)		24			24			0			12	
Link Offset(ft)		0			0			0			0	
Crosswalk Width(ft)		16			16			16			16	
Two way Left Turn Lane												
Headway Factor	1.04	1.04	1.04	0.96	0.96	0.96	1.08	1.08	1.08	1.05	1.05	1.05
Turning Speed (mph)	15		9	15		9	15		9	15		9
Number of Detectors	1	2	1	1	2	1	1	2		1	2	1
Detector Template	Left	Thru	Right	Left	Thru	Right	Left	Thru		Left	Thru	Right
Leading Detector (ft)	20	100	20	20	100	20	20	100		20	100	20
Trailing Detector (ft)	0	0	0	0	0	0	0	0		0	0	0
Detector 1 Position(ft)	0	0	0	0	0	0	0	0		0	0	0
Detector 1 Size(ft)	20	6	20	20	6	20	20	6		20	6	20
Detector 1 Type	Cl+Ex	Cl+Ex	Cl+Ex	Cl+Ex	Cl+Ex	Cl+Ex	Cl+Ex	Cl+Ex		Cl+Ex	Cl+Ex	Cl+Ex
Detector 1 Channel												
Detector 1 Extend (s)	0.0	0.0	0.0	0.0	0.0	0.0	0.0	0.0		0.0	0.0	0.0
Detector 1 Queue (s)	0.0	0.0	0.0	0.0	0.0	0.0	0.0	0.0		0.0	0.0	0.0
Detector 1 Delay (s)	0.0	0.0	0.0	0.0	0.0	0.0	0.0	0.0		0.0	0.0	0.0
Detector 2 Position(ft)		94			94			94			94	
Detector 2 Size(ft)		6			6			6			6	
Detector 2 Type		Cl+Ex			Cl+Ex			Cl+Ex			Cl+Ex	
Detector 2 Channel												
Detector 2 Extend (s)		0.0			0.0			0.0			0.0	
Turn Type	Prot	NA	pm+ov	Prot	NA	pm+ov	Split	NA		Split	NA	pm+ov

DocuSign Envelope ID: 5C03745C-4B01-4834-A65D-B77F558A4F46

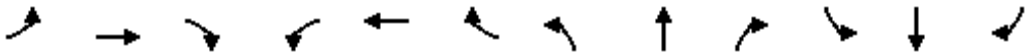

Lane Group	EBL	EBT	EBR	WBL	WBT	WBR	NBL	NBT	NBR	SBL	SBT	SBR
Protected Phases	5	2	4	1	6	3	4	4		3	3	5
Permitted Phases			2			6						3
Detector Phase	5	2	4	1	6	3	4	4		3	3	5
Switch Phase												
Minimum Initial (s)	7.0	12.0	7.0	7.0	12.0	7.0	7.0	7.0		7.0	7.0	7.0
Minimum Split (s)	13.3	20.7	39.3	13.3	32.6	13.4	39.3	39.3		13.4	13.4	13.3
Total Split (s)	47.0	96.0	15.0	14.0	63.0	25.0	15.0	15.0		25.0	25.0	47.0
Total Split (%)	31.3%	64.0%	10.0%	9.3%	42.0%	16.7%	10.0%	10.0%		16.7%	16.7%	31.3%
Maximum Green (s)	40.7	90.3	8.7	7.7	56.4	18.6	8.7	8.7		18.6	18.6	40.7
Yellow Time (s)	3.0	4.1	3.0	3.1	5.1	3.0	3.0	3.0		3.0	3.0	3.0
All-Red Time (s)	3.3	1.6	3.3	3.2	1.5	3.4	3.3	3.3		3.4	3.4	3.3
Lost Time Adjust (s)	-1.3	-0.7	-1.3	-1.3	-1.6	-1.4		-1.3		-1.4	-1.4	-1.3
Total Lost Time (s)	5.0	5.0	5.0	5.0	5.0	5.0		5.0		5.0	5.0	5.0
Lead/Lag	Lag	Lag	Lead	Lead	Lead	Lag	Lead	Lead		Lag	Lag	Lag
Lead-Lag Optimize?	Yes	Yes	Yes	Yes	Yes	Yes	Yes	Yes		Yes	Yes	Yes
Vehicle Extension (s)	3.0	6.0	3.0	2.0	6.0	3.0	3.0	3.0		3.0	3.0	3.0
Minimum Gap (s)	0.2	3.0	0.2	0.2	3.0	0.2	0.2	0.2		0.2	0.2	0.2
Time Before Reduce (s)	0.0	20.0	0.0	0.0	20.0	0.0	0.0	0.0		0.0	0.0	0.0
Time To Reduce (s)	0.0	30.0	0.0	0.0	30.0	0.0	0.0	0.0		0.0	0.0	0.0
Recall Mode	None	C-Max	None	None	C-Max	None	None	None		None	None	None
Walk Time (s)		7.0	7.0		7.0		7.0	7.0				
Flash Dont Walk (s)		8.0	26.0		19.0		26.0	26.0				
Pedestrian Calls (#/hr)		0	0		0		0	0				
Act Effct Green (s)	42.0	96.7	111.7	8.6	58.0	83.0		10.0		20.0	20.0	62.0
Actuated g/C Ratio	0.28	0.64	0.74	0.06	0.39	0.55		0.07		0.13	0.13	0.41
v/c Ratio	1.04	1.04	0.14	0.28	0.98	0.49		0.96		1.07	1.06	0.87
Control Delay	58.0	33.3	1.0	75.1	65.6	22.9		145.0		140.9	139.3	43.6
Queue Delay	0.0	24.0	0.0	0.0	0.0	0.0		0.0		0.0	0.0	0.0
Total Delay	58.0	57.3	1.0	75.1	65.6	22.9		145.0		140.9	139.3	43.6
LOS	E	E	A	E	E	C		F		F	F	D
Approach Delay		54.9			55.6			145.0			87.7	
Approach LOS		D			E			F			F	
Queue Length 50th (ft)	~512	~1314	16	28	688	252		103		~251	~251	356
Queue Length 95th (ft)	m239	m231	m10	63	#852	347		#229		#435	#434	#485
Internal Link Dist (ft)		513			1502			642			912	
Turn Bay Length (ft)	350		400	250		225				450		
Base Capacity (vph)	914	2171	1121	107	1382	884		108		208	210	607
Starvation Cap Reductn	0	578	0	0	0	0		0		0	0	0
Spillback Cap Reductn	0	0	0	0	0	0		0		0	0	0
Storage Cap Reductn	0	0	0	0	0	0		0		0	0	0
Reduced v/c Ratio	1.04	1.42	0.14	0.27	0.98	0.49		0.96		1.07	1.06	0.87

Intersection Summary	
Area Type:	Other
Cycle Length: 150	
Actuated Cycle Length: 150	
Offset: 23 (15%), Referenced to phase 2:EBT and 6:WBT, Start of Green	
Natural Cycle: 150	
Control Type: Actuated-Coordinated	

DocuSign Envelope ID: 5C03745C-4B01-4834-A65D-B77F558A4F46

Maximum v/c Ratio: 1.07	
Intersection Signal Delay: 61.7	Intersection LOS: E
Intersection Capacity Utilization 91.6%	ICU Level of Service F
Analysis Period (min) 15	

~ Volume exceeds capacity, queue is theoretically infinite.
Queue shown is maximum after two cycles.

95th percentile volume exceeds capacity, queue may be longer.
Queue shown is maximum after two cycles.

m Volume for 95th percentile queue is metered by upstream signal.

Splits and Phases: 12: Skyland Inn Dr/Schenck Pkwy & NC 146 (Long Shoals Rd)

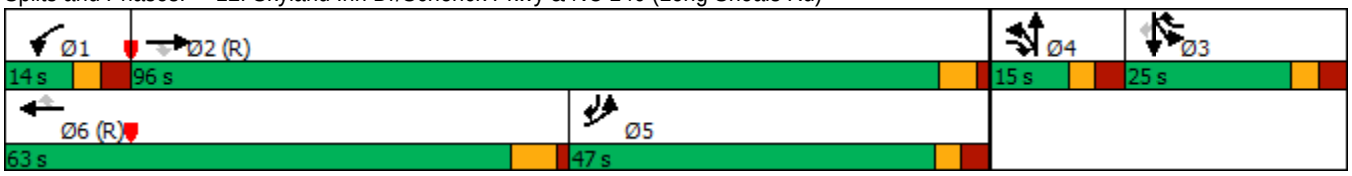

DocuSign Envelope ID: 5C03745C-4B01-4834-A65D-B77F558A4F46

2045 No-Build - PM

DocuSign Envelope ID: 5C03745C-4B01-4834-A65D-B77F558A4F46

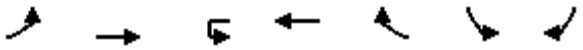

Lane Group	EBL	EBT	WBU	WBT	WBR	SBL	SBR
Lane Configurations							
Traffic Volume (vph)	99	2065	0	1690	101	101	81
Future Volume (vph)	99	2065	0	1690	101	101	81
Ideal Flow (vphpl)	1900	1900	1900	1900	1900	1900	1900
Storage Length (ft)	150		150		175	0	175
Storage Lanes	1		1		1	1	1
Taper Length (ft)	25		25			25	
Lane Util. Factor	1.00	0.95	1.00	0.95	1.00	1.00	1.00
Frt					0.850		0.850
Flt Protected	0.950					0.950	
Satd. Flow (prot)	1703	3406	1792	3406	1524	1703	1524
Flt Permitted	0.950					0.950	
Satd. Flow (perm)	1703	3406	1792	3406	1524	1703	1524
Right Turn on Red					No		No
Satd. Flow (RTOR)							
Link Speed (mph)		45		45		25	
Link Distance (ft)		1606		558		1108	
Travel Time (s)		24.3		8.5		30.2	
Peak Hour Factor	0.90	0.90	0.90	0.90	0.90	0.90	0.90
Heavy Vehicles (%)	6%	6%	6%	6%	6%	6%	6%
Adj. Flow (vph)	110	2294	0	1878	112	112	90
Shared Lane Traffic (%)							
Lane Group Flow (vph)	110	2294	0	1878	112	112	90
Enter Blocked Intersection	No	No	No	No	No	No	No
Lane Alignment	Left	Left	R NA	Left	Right	Left	Right
Median Width(ft)		12		12		12	
Link Offset(ft)		0		0		0	
Crosswalk Width(ft)		16		16		16	
Two way Left Turn Lane							
Headway Factor	1.00	1.00	1.00	1.00	1.00	1.00	1.00
Turning Speed (mph)	15		9		9	15	9
Number of Detectors	1	2	1	2	1	1	1
Detector Template	Left	Thru	Left	Thru	Right	Left	Right
Leading Detector (ft)	20	100	20	100	20	20	20
Trailing Detector (ft)	0	0	0	0	0	0	0
Detector 1 Position(ft)	0	0	0	0	0	0	0
Detector 1 Size(ft)	20	6	20	6	20	20	20
Detector 1 Type	Cl+Ex	Cl+Ex	Cl+Ex	Cl+Ex	Cl+Ex	Cl+Ex	Cl+Ex
Detector 1 Channel							
Detector 1 Extend (s)	0.0	0.0	0.0	0.0	0.0	0.0	0.0
Detector 1 Queue (s)	0.0	0.0	0.0	0.0	0.0	0.0	0.0
Detector 1 Delay (s)	0.0	0.0	0.0	0.0	0.0	0.0	0.0
Detector 2 Position(ft)		94		94			
Detector 2 Size(ft)		6		6			
Detector 2 Type		Cl+Ex		Cl+Ex			
Detector 2 Channel							
Detector 2 Extend (s)		0.0		0.0			
Turn Type	Prot	NA	Prot	NA	pm+ov	Prot	pm+ov
Protected Phases	5	2	1	6	4	4	5

DocuSign Envelope ID: 5C03745C-4B01-4834-A65D-B77F558A4F46

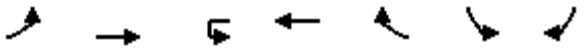

Lane Group	EBL	EBT	WBU	WBT	WBR	SBL	SBR
Permitted Phases					6		4
Detector Phase	5	2	1	6	4	4	5
Switch Phase							
Minimum Initial (s)	7.0	12.0	7.0	12.0	7.0	7.0	7.0
Minimum Split (s)	13.1	18.8	11.9	35.8	36.5	36.5	13.1
Total Split (s)	14.0	81.0	12.0	79.0	37.0	37.0	14.0
Total Split (%)	10.8%	62.3%	9.2%	60.8%	28.5%	28.5%	10.8%
Maximum Green (s)	7.9	74.2	7.1	72.2	30.5	30.5	7.9
Yellow Time (s)	3.0	4.9	3.0	4.9	3.0	3.0	3.0
All-Red Time (s)	3.1	1.9	1.9	1.9	3.5	3.5	3.1
Lost Time Adjust (s)	-1.1	-1.8	0.1	-1.8	-1.8	-1.5	-1.1
Total Lost Time (s)	5.0	5.0	5.0	5.0	4.7	5.0	5.0
Lead/Lag	Lag	Lag	Lead	Lead			Lag
Lead-Lag Optimize?	Yes	Yes	Yes	Yes			Yes
Vehicle Extension (s)	2.0	6.0	2.0	6.0	2.0	2.0	2.0
Minimum Gap (s)	0.2	3.0	0.2	3.0	0.2	0.2	0.2
Time Before Reduce (s)	0.0	15.0	0.0	15.0	0.0	0.0	0.0
Time To Reduce (s)	0.0	30.0	0.0	30.0	0.0	0.0	0.0
Recall Mode	None	C-Max	None	C-Max	None	None	None
Walk Time (s)				7.0	7.0	7.0	
Flash Dont Walk (s)				22.0	23.0	23.0	
Pedestrian Calls (#/hr)				0	0	0	
Act Effct Green (s)	9.0	105.5		91.5	111.3	14.5	28.5
Actuated g/C Ratio	0.07	0.81		0.70	0.86	0.11	0.22
v/c Ratio	0.94	0.83		0.78	0.09	0.59	0.27
Control Delay	128.3	11.4		8.7	1.9	67.2	43.2
Queue Delay	0.0	4.9		2.0	0.0	9.0	0.0
Total Delay	128.3	16.3		10.8	1.9	76.2	43.2
LOS	F	B		B	A	E	D
Approach Delay		21.5		10.3		61.5	
Approach LOS		C		B		E	
Queue Length 50th (ft)	94	475		122	10	91	63
Queue Length 95th (ft)	#214	750		m367	m24	149	108
Internal Link Dist (ft)		1526		478		1028	
Turn Bay Length (ft)	150				175		175
Base Capacity (vph)	117	2765		2398	1304	419	333
Starvation Cap Reductn	0	0		356	0	0	0
Spillback Cap Reductn	0	412		0	0	268	0
Storage Cap Reductn	0	0		0	0	0	0
Reduced v/c Ratio	0.94	0.97		0.92	0.09	0.74	0.27

Intersection Summary	
Area Type:	Other
Cycle Length: 130	
Actuated Cycle Length: 130	
Offset: 60 (46%), Referenced to phase 2:EBT and 6:WBT, Start of Green	
Natural Cycle: 150	
Control Type: Actuated-Coordinated	
Maximum v/c Ratio: 0.94	

DocuSign Envelope ID: 5C03745C-4B01-4834-A65D-B77F558A4F46

Intersection Signal Delay: 18.4	Intersection LOS: B
Intersection Capacity Utilization 81.2%	ICU Level of Service D
Analysis Period (min) 15	

\# 95th percentile volume exceeds capacity, queue may be longer.
Queue shown is maximum after two cycles.
m Volume for 95th percentile queue is metered by upstream signal.

Splits and Phases: 1: NC 191 (Brevard Rd) & Commercial Access

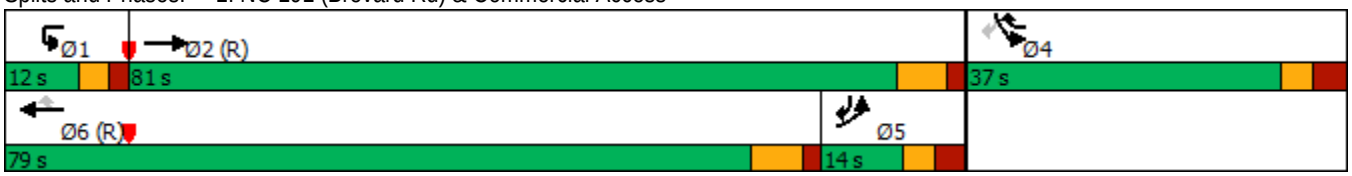

DocuSign Envelope ID: 5C03745C-4B01-4834-A65D-B77F558A4F46

Lane Group	EBT	EBR	WBL	WBT	NBL	NBR
Lane Configurations						
Traffic Volume (vph)	1782	384	218	1182	609	65
Future Volume (vph)	1782	384	218	1182	609	65
Ideal Flow (vphpl)	1900	1900	1900	1900	1900	1900
Grade (%)	-1%			-1%	0%	
Storage Length (ft)		225	200		0	0
Storage Lanes		1	1		2	1
Taper Length (ft)			25		25	
Lane Util. Factor	0.95	1.00	1.00	0.95	0.97	1.00
Frt		0.850				0.850
Flt Protected			0.950		0.950	
Satd. Flow (prot)	3423	1449	1620	3423	3303	1524
Flt Permitted			0.950		0.950	
Satd. Flow (perm)	3423	1449	1620	3423	3303	1524
Right Turn on Red		No				Yes
Satd. Flow (RTOR)						7
Link Speed (mph)	45			45	45	
Link Distance (ft)	558			1204	323	
Travel Time (s)	8.5			18.2	4.9	
Peak Hour Factor	0.90	0.90	0.90	0.90	0.90	0.90
Heavy Vehicles (%)	6%	12%	12%	6%	6%	6%
Adj. Flow (vph)	1980	427	242	1313	677	72
Shared Lane Traffic (%)						
Lane Group Flow (vph)	1980	427	242	1313	677	72
Enter Blocked Intersection	No	No	No	No	No	No
Lane Alignment	Left	Right	Left	Left	Left	Right
Median Width(ft)	12			12	40	
Link Offset(ft)	0			0	0	
Crosswalk Width(ft)	16			16	16	
Two way Left Turn Lane						
Headway Factor	0.99	0.99	0.99	0.99	1.00	1.00
Turning Speed (mph)		9	15		15	9
Number of Detectors	2	1	1	2	1	1
Detector Template	Thru	Right	Left	Thru	Left	Right
Leading Detector (ft)	100	20	20	100	20	20
Trailing Detector (ft)	0	0	0	0	0	0
Detector 1 Position(ft)	0	0	0	0	0	0
Detector 1 Size(ft)	6	20	20	6	20	20
Detector 1 Type	Cl+Ex	Cl+Ex	Cl+Ex	Cl+Ex	Cl+Ex	Cl+Ex
Detector 1 Channel						
Detector 1 Extend (s)	0.0	0.0	0.0	0.0	0.0	0.0
Detector 1 Queue (s)	0.0	0.0	0.0	0.0	0.0	0.0
Detector 1 Delay (s)	0.0	0.0	0.0	0.0	0.0	0.0
Detector 2 Position(ft)	94			94		
Detector 2 Size(ft)	6			6		
Detector 2 Type	Cl+Ex			Cl+Ex		
Detector 2 Channel						
Detector 2 Extend (s)	0.0			0.0		
Turn Type	NA	pm+ov	Prot	NA	Prot	pm+ov

DocuSign Envelope ID: 5C03745C-4B01-4834-A65D-B77F558A4F46



Lane Group	EBT	EBR	WBL	WBT	NBL	NBR
Protected Phases	2	4	1	6	4	1
Permitted Phases		2				4
Detector Phase	2	4	1	6	4	1
Switch Phase						
Minimum Initial (s)	12.0	7.0	10.0	12.0	7.0	10.0
Minimum Split (s)	18.0	13.9	16.3	18.6	13.9	16.3
Total Split (s)	76.0	30.0	24.0	100.0	30.0	24.0
Total Split (%)	58.5%	23.1%	18.5%	76.9%	23.1%	18.5%
Maximum Green (s)	70.0	23.1	17.7	93.4	23.1	17.7
Yellow Time (s)	4.4	3.0	3.0	4.7	3.0	3.0
All-Red Time (s)	1.6	3.9	3.3	1.9	3.9	3.3
Lost Time Adjust (s)	-1.0	-1.9	-1.3	-1.6	-1.9	-1.9
Total Lost Time (s)	5.0	5.0	5.0	5.0	5.0	4.4
Lead/Lag	Lag		Lead			Lead
Lead-Lag Optimize?	Yes		Yes			Yes
Vehicle Extension (s)	6.0	5.0	2.5	6.0	5.0	2.5
Minimum Gap (s)	3.0	0.2	0.2	3.0	0.2	0.2
Time Before Reduce (s)	15.0	0.0	0.0	15.0	0.0	0.0
Time To Reduce (s)	30.0	0.0	0.0	30.0	0.0	0.0
Recall Mode	C-Max	None	None	C-Max	None	None
Act Effct Green (s)	71.0	101.0	19.0	95.0	25.0	49.6
Actuated g/C Ratio	0.55	0.78	0.15	0.73	0.19	0.38
v/c Ratio	1.06	0.38	1.03	0.52	1.07	0.12
Control Delay	64.5	5.8	111.8	7.3	104.2	24.3
Queue Delay	17.1	0.5	0.0	0.0	0.0	0.0
Total Delay	81.7	6.3	111.8	7.3	104.2	24.3
LOS	F	A	F	A	F	C
Approach Delay	68.3			23.6	96.5	
Approach LOS	E			C	F	
Queue Length 50th (ft)	~954	91	~221	173	~324	35
Queue Length 95th (ft)	#1097	m183	m#340	275	#446	70
Internal Link Dist (ft)	478			1124	243	
Turn Bay Length (ft)		225	200			
Base Capacity (vph)	1869	1125	236	2501	635	585
Starvation Cap Reductn	178	336	0	0	0	0
Spillback Cap Reductn	0	0	0	59	0	0
Storage Cap Reductn	0	0	0	0	0	0
Reduced v/c Ratio	1.17	0.54	1.03	0.54	1.07	0.12

Intersection Summary			
Area Type:	Other		
Cycle Length: 130			
Actuated Cycle Length: 130			
Offset: 0 (0%), Referenced to phase 2:EBT and 6:WBT, Start of Green			
Natural Cycle: 140			
Control Type: Actuated-Coordinated			
Maximum v/c Ratio: 1.07			
Intersection Signal Delay: 58.0		Intersection LOS: E	
Intersection Capacity Utilization 91.2%		ICU Level of Service F	

DocuSign Envelope ID: 5C03745C-4B01-4834-A65D-B77F558A4F46

Analysis Period (min) 15

~ Volume exceeds capacity, queue is theoretically infinite.
Queue shown is maximum after two cycles.

95th percentile volume exceeds capacity, queue may be longer.
Queue shown is maximum after two cycles.

m Volume for 95th percentile queue is metered by upstream signal.

Splits and Phases: 2: I-26 SEB Ramps & NC 191 (Brevard Rd)

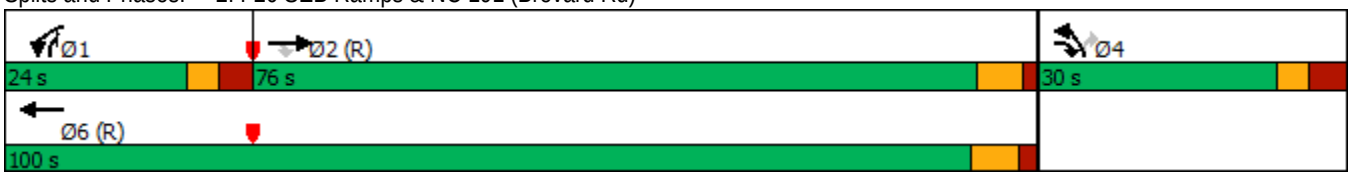

DocuSign Envelope ID: 5C03745C-4B01-4834-A65D-B77F558A4F46

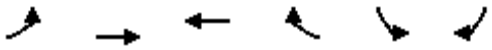

Lane Group	EBL	EBT	WBT	WBR	SBL	SBR
Lane Configurations						
Traffic Volume (vph)	666	1181	1086	55	229	314
Future Volume (vph)	666	1181	1086	55	229	314
Ideal Flow (vphpl)	1900	1900	1900	1900	1900	1900
Grade (%)		2%	-2%		2%	
Storage Length (ft)	625			200	0	400
Storage Lanes	2			1	2	1
Taper Length (ft)	25				25	
Lane Util. Factor	0.97	0.95	0.95	1.00	0.97	1.00
Frt				0.850		0.850
Flt Protected	0.950				0.950	
Satd. Flow (prot)	3095	3340	3408	1456	3240	1494
Flt Permitted	0.950				0.950	
Satd. Flow (perm)	3095	3340	3408	1456	3240	1494
Right Turn on Red				No		No
Satd. Flow (RTOR)						
Link Speed (mph)		45	45		45	
Link Distance (ft)		802	1565		860	
Travel Time (s)		12.2	23.7		13.0	
Peak Hour Factor	0.90	0.90	0.90	0.90	0.90	0.90
Heavy Vehicles (%)	12%	7%	7%	12%	7%	7%
Adj. Flow (vph)	740	1312	1207	61	254	349
Shared Lane Traffic (%)						
Lane Group Flow (vph)	740	1312	1207	61	254	349
Enter Blocked Intersection	No	No	No	No	No	No
Lane Alignment	Left	Left	Left	Right	Left	Right
Median Width(ft)		24	12		36	
Link Offset(ft)		0	0		0	
Crosswalk Width(ft)		16	16		16	
Two way Left Turn Lane						
Headway Factor	1.01	1.01	0.99	0.99	1.01	1.01
Turning Speed (mph)	15			9	15	9
Number of Detectors	1	2	2	1	1	1
Detector Template	Left	Thru	Thru	Right	Left	Right
Leading Detector (ft)	20	100	100	20	20	20
Trailing Detector (ft)	0	0	0	0	0	0
Detector 1 Position(ft)	0	0	0	0	0	0
Detector 1 Size(ft)	20	6	6	20	20	20
Detector 1 Type	Cl+Ex	Cl+Ex	Cl+Ex	Cl+Ex	Cl+Ex	Cl+Ex
Detector 1 Channel						
Detector 1 Extend (s)	0.0	0.0	0.0	0.0	0.0	0.0
Detector 1 Queue (s)	0.0	0.0	0.0	0.0	0.0	0.0
Detector 1 Delay (s)	0.0	0.0	0.0	0.0	0.0	0.0
Detector 2 Position(ft)		94	94			
Detector 2 Size(ft)		6	6			
Detector 2 Type		Cl+Ex	Cl+Ex			
Detector 2 Channel						
Detector 2 Extend (s)		0.0	0.0			
Turn Type	Prot	NA	NA	pm+ov	Prot	pm+ov

DocuSign Envelope ID: 5C03745C-4B01-4834-A65D-B77F558A4F46

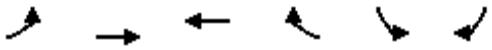

Lane Group	EBL	EBT	WBT	WBR	SBL	SBR
Protected Phases	5	2	6	4	4	5
Permitted Phases				6		4
Detector Phase	5	2	6	4	4	5
Switch Phase						
Minimum Initial (s)	7.0	12.0	12.0	7.0	7.0	7.0
Minimum Split (s)	14.0	19.0	25.0	25.0	25.0	14.0
Total Split (s)	44.0	105.0	61.0	25.0	25.0	44.0
Total Split (%)	33.8%	80.8%	46.9%	19.2%	19.2%	33.8%
Maximum Green (s)	37.0	98.0	54.0	18.0	18.0	37.0
Yellow Time (s)	5.0	5.0	5.0	5.0	5.0	5.0
All-Red Time (s)	2.0	2.0	2.0	2.0	2.0	2.0
Lost Time Adjust (s)	-2.0	-2.0	-2.0	-2.0	-2.0	-2.0
Total Lost Time (s)	5.0	5.0	5.0	5.0	5.0	5.0
Lead/Lag	Lag		Lead			Lag
Lead-Lag Optimize?	Yes		Yes			Yes
Vehicle Extension (s)	3.0	3.0	3.0	3.0	3.0	3.0
Minimum Gap (s)	0.2	3.0	3.0	0.2	0.2	0.2
Time Before Reduce (s)	0.0	15.0	15.0	0.0	0.0	0.0
Time To Reduce (s)	0.0	30.0	30.0	0.0	0.0	0.0
Recall Mode	None	C-Max	C-Max	None	None	None
Walk Time (s)			7.0	7.0	7.0	
Flash Dont Walk (s)			11.0	11.0	11.0	
Pedestrian Calls (#/hr)			0	0	0	
Act Effct Green (s)	39.0	102.9	58.9	81.0	17.1	61.1
Actuated g/C Ratio	0.30	0.79	0.45	0.62	0.13	0.47
v/c Ratio	0.80	0.50	0.78	0.07	0.60	0.50
Control Delay	14.6	0.9	35.0	9.9	59.0	26.4
Queue Delay	0.0	0.0	0.0	0.0	0.0	0.0
Total Delay	14.6	0.9	35.0	9.9	59.0	26.4
LOS	B	A	C	A	E	C
Approach Delay		5.9	33.8		40.1	
Approach LOS		A	C		D	
Queue Length 50th (ft)	224	26	447	19	105	198
Queue Length 95th (ft)	m203	m27	560	38	147	277
Internal Link Dist (ft)		722	1485		780	
Turn Bay Length (ft)	625			200		400
Base Capacity (vph)	928	2644	1544	891	498	702
Starvation Cap Reductn	0	0	0	0	0	0
Spillback Cap Reductn	0	0	0	0	0	0
Storage Cap Reductn	0	0	0	0	0	0
Reduced v/c Ratio	0.80	0.50	0.78	0.07	0.51	0.50

Intersection Summary	
Area Type:	Other
Cycle Length: 130	
Actuated Cycle Length: 130	
Offset: 1 (1%), Referenced to phase 2:EBT and 6:WBT, Start of Green	
Natural Cycle: 90	
Control Type: Actuated-Coordinated	

DocuSign Envelope ID: 5C03745C-4B01-4834-A65D-B77F558A4F46

Maximum v/c Ratio: 0.80	
Intersection Signal Delay: 20.2	Intersection LOS: C
Intersection Capacity Utilization 68.1%	ICU Level of Service C
Analysis Period (min) 15	

m Volume for 95th percentile queue is metered by upstream signal.

Splits and Phases: 3: NC 191 (Brevard Rd) & I-26 NWB Ramps

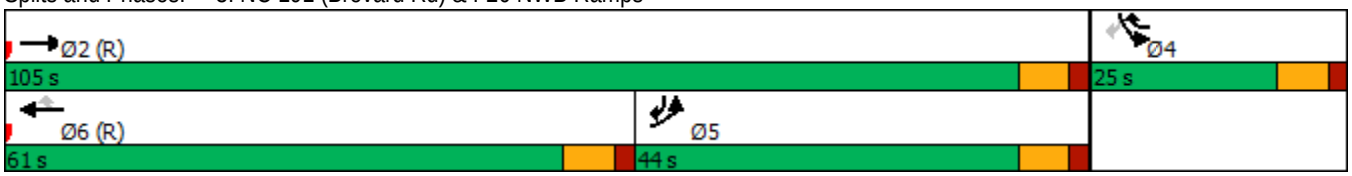

DocuSign Envelope ID: 5C03745C-4B01-4834-A65D-B77F558A4F46

Intersection	
Int Delay, s/veh	2.6

Movement	EBL	EBR	NBL	NBT	SBT	SBR
Lane Configurations						
Traffic Vol, veh/h	94	17	14	246	193	56
Future Vol, veh/h	94	17	14	246	193	56
Conflicting Peds, #/hr	0	0	0	0	0	0
Sign Control	Stop	Stop	Free	Free	Free	Free
RT Channelized	-	None	-	None	-	None
Storage Length	75	0	275	-	-	-
Veh in Median Storage, #	0	-	-	0	0	-
Grade, %	0	-	-	0	3	-
Peak Hour Factor	90	90	90	90	90	90
Heavy Vehicles, %	2	2	2	2	2	2
Mvmt Flow	104	19	16	273	214	62

Major/Minor	Minor2		Major1		Major2	
Conflicting Flow All	550	245	276	0	-	0
Stage 1	245	-	-	-	-	-
Stage 2	305	-	-	-	-	-
Critical Hdwy	6.42	6.22	4.12	-	-	-
Critical Hdwy Stg 1	5.42	-	-	-	-	-
Critical Hdwy Stg 2	5.42	-	-	-	-	-
Follow-up Hdwy	3.518	3.318	2.218	-	-	-
Pot Cap-1 Maneuver	496	794	1287	-	-	-
Stage 1	796	-	-	-	-	-
Stage 2	748	-	-	-	-	-
Platoon blocked, %				-	-	-
Mov Cap-1 Maneuver	490	794	1287	-	-	-
Mov Cap-2 Maneuver	490	-	-	-	-	-
Stage 1	786	-	-	-	-	-
Stage 2	748	-	-	-	-	-

Approach	EB	NB	SB
HCM Control Delay, s	13.6	0.4	0
HCM LOS	B		

Minor Lane/Major Mvmt	NBL	NBT	EBLn1	EBLn2	SBT	SBR
Capacity (veh/h)	1287	-	490	794	-	-
HCM Lane V/C Ratio	0.012	-	0.213	0.024	-	-
HCM Control Delay (s)	7.8	-	14.3	9.6	-	-
HCM Lane LOS	A	-	B	A	-	-
HCM 95th %tile Q(veh)	0	-	0.8	0.1	-	-

DocuSign Envelope ID: 5C03745C-4B01-4834-A65D-B77F558A4F46

Lane Group	EBL	EBT	EBR	WBL	WBT	WBR	NBL	NBT	NBR	SBL	SBT	SBR
Lane Configurations												
Traffic Volume (vph)	177	69	94	254	66	471	78	1088	220	290	775	105
Future Volume (vph)	177	69	94	254	66	471	78	1088	220	290	775	105
Ideal Flow (vphpl)	1900	1900	1900	1900	1900	1900	1900	1900	1900	1900	1900	1900
Grade (%)		3%			0%			2%			-7%	
Storage Length (ft)	0		0	300		0	150		250	250		0
Storage Lanes	1		0	1		1	1		1	2		0
Taper Length (ft)	25			25			25			25		
Lane Util. Factor	1.00	0.95	0.95	1.00	0.95	0.95	1.00	0.95	1.00	0.97	0.95	0.95
Frt		0.914			0.886	0.850			0.850		0.982	
Flt Protected	0.950			0.950			0.950			0.950		
Satd. Flow (prot)	1743	3186	0	1736	1538	1475	1686	3372	1508	3452	3494	0
Flt Permitted	0.950			0.950			0.950			0.950		
Satd. Flow (perm)	1743	3186	0	1736	1538	1475	1686	3372	1508	3452	3494	0
Right Turn on Red			No			No			No			No
Satd. Flow (RTOR)												
Link Speed (mph)		35			35			45			45	
Link Distance (ft)		248			1201			1589			1600	
Travel Time (s)		4.8			23.4			24.1			24.2	
Peak Hour Factor	0.90	0.90	0.90	0.90	0.90	0.90	0.90	0.90	0.90	0.90	0.90	0.90
Heavy Vehicles (%)	2%	2%	2%	4%	4%	4%	6%	6%	6%	5%	5%	5%
Adj. Flow (vph)	197	77	104	282	73	523	87	1209	244	322	861	117
Shared Lane Traffic (%)						44%						
Lane Group Flow (vph)	197	181	0	282	303	293	87	1209	244	322	978	0
Enter Blocked Intersection	No	No	No	No	No	No	No	No	No	No	No	No
Lane Alignment	L NA	Left	Right	Left	Left	Left	Left	L NA	Right	Left	Left	Right
Median Width(ft)		12			12			24			24	
Link Offset(ft)		0			0			0			0	
Crosswalk Width(ft)		16			16			16			16	
Two way Left Turn Lane												
Headway Factor	1.02	1.02	1.02	1.00	1.00	1.00	1.01	1.01	1.01	0.96	0.96	0.96
Turning Speed (mph)	15		9	15		9	15		9	15		9
Number of Detectors	1	2		1	2	1	1	2	1	1	2	
Detector Template	Left	Thru		Left	Thru	Right	Left	Thru	Right	Left	Thru	
Leading Detector (ft)	20	100		20	100	20	20	100	20	20	100	
Trailing Detector (ft)	0	0		0	0	0	0	0	0	0	0	
Detector 1 Position(ft)	0	0		0	0	0	0	0	0	0	0	
Detector 1 Size(ft)	20	6		20	6	20	20	6	20	20	6	
Detector 1 Type	Cl+Ex	Cl+Ex		Cl+Ex	Cl+Ex	Cl+Ex	Cl+Ex	Cl+Ex	Cl+Ex	Cl+Ex	Cl+Ex	
Detector 1 Channel												
Detector 1 Extend (s)	0.0	0.0		0.0	0.0	0.0	0.0	0.0	0.0	0.0	0.0	
Detector 1 Queue (s)	0.0	0.0		0.0	0.0	0.0	0.0	0.0	0.0	0.0	0.0	
Detector 1 Delay (s)	0.0	0.0		0.0	0.0	0.0	0.0	0.0	0.0	0.0	0.0	
Detector 2 Position(ft)		94			94			94			94	
Detector 2 Size(ft)		6			6			6			6	
Detector 2 Type		Cl+Ex			Cl+Ex			Cl+Ex			Cl+Ex	
Detector 2 Channel												
Detector 2 Extend (s)		0.0			0.0			0.0			0.0	
Turn Type	Prot	NA		Prot	NA	Perm	Prot	NA	pm+ov	Prot	NA	

DocuSign Envelope ID: 5C03745C-4B01-4834-A65D-B77F558A4F46

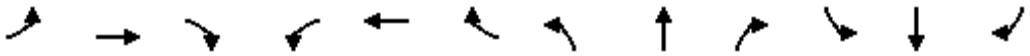

Lane Group	EBL	EBT	EBR	WBL	WBT	WBR	NBL	NBT	NBR	SBL	SBT	SBR
Protected Phases	7	4		3	8		5	2	3	1	6	
Permitted Phases						8			2			
Detector Phase	7	4		3	8	8	5	2	3	1	6	
Switch Phase												
Minimum Initial (s)	7.0	7.0		7.0	7.0	7.0	7.0	12.0	7.0	7.0	12.0	
Minimum Split (s)	14.0	14.0		14.0	14.0	14.0	14.0	19.0	14.0	14.0	19.0	
Total Split (s)	20.0	17.0		34.0	31.0	31.0	18.0	52.0	34.0	17.0	51.0	
Total Split (%)	16.7%	14.2%		28.3%	25.8%	25.8%	15.0%	43.3%	28.3%	14.2%	42.5%	
Maximum Green (s)	13.0	10.0		27.0	24.0	24.0	11.0	45.0	27.0	10.0	44.0	
Yellow Time (s)	5.0	5.0		5.0	5.0	5.0	5.0	5.0	5.0	5.0	5.0	
All-Red Time (s)	2.0	2.0		2.0	2.0	2.0	2.0	2.0	2.0	2.0	2.0	
Lost Time Adjust (s)	-2.0	-2.0		-2.0	-2.0	-2.0	-2.0	-2.0	-2.0	-2.0	-2.0	
Total Lost Time (s)	5.0	5.0		5.0	5.0	5.0	5.0	5.0	5.0	5.0	5.0	
Lead/Lag	Lead	Lag		Lead	Lag	Lag	Lead	Lag	Lead	Lead	Lag	
Lead-Lag Optimize?	Yes	Yes		Yes	Yes	Yes	Yes	Yes	Yes	Yes	Yes	
Vehicle Extension (s)	3.0	3.0		3.0	3.0	3.0	3.0	3.0	3.0	3.0	3.0	
Minimum Gap (s)	3.0	3.0		3.0	3.0	3.0	3.0	3.0	3.0	3.0	3.0	
Time Before Reduce (s)	0.0	0.0		0.0	0.0	0.0	0.0	15.0	0.0	0.0	15.0	
Time To Reduce (s)	0.0	0.0		0.0	0.0	0.0	0.0	30.0	0.0	0.0	30.0	
Recall Mode	None	None		None	None	None	None	Min	None	None	Min	
Act Effct Green (s)	15.0	15.5		25.2	25.7	25.7	11.9	46.2	76.4	12.0	49.2	
Actuated g/C Ratio	0.13	0.13		0.21	0.22	0.22	0.10	0.39	0.64	0.10	0.41	
v/c Ratio	0.90	0.44		0.77	0.91	0.92	0.52	0.92	0.25	0.93	0.68	
Control Delay	91.3	53.0		58.3	78.1	80.5	62.2	47.3	9.4	85.8	32.5	
Queue Delay	0.0	0.0		0.0	0.0	0.0	0.0	0.0	0.0	0.0	0.0	
Total Delay	91.3	53.0		58.3	78.1	80.5	62.2	47.3	9.4	85.8	32.5	
LOS	F	D		E	E	F	E	D	A	F	C	
Approach Delay		72.9			72.6			42.1			45.7	
Approach LOS		E			E			D			D	
Queue Length 50th (ft)	153	70		204	243	235	64	462	72	129	337	
Queue Length 95th (ft)	#294	111		297	#420	#410	119	#602	103	#219	417	
Internal Link Dist (ft)		168			1121			1509			1520	
Turn Bay Length (ft)				300			150		250	250		
Base Capacity (vph)	219	415		423	336	322	184	1333	1017	348	1446	
Starvation Cap Reductn	0	0		0	0	0	0	0	0	0	0	
Spillback Cap Reductn	0	0		0	0	0	0	0	0	0	0	
Storage Cap Reductn	0	0		0	0	0	0	0	0	0	0	
Reduced v/c Ratio	0.90	0.44		0.67	0.90	0.91	0.47	0.91	0.24	0.93	0.68	

Intersection Summary			
Area Type:	Other		
Cycle Length: 120			
Actuated Cycle Length: 118.9			
Natural Cycle: 90			
Control Type: Actuated-Uncoordinated			
Maximum v/c Ratio: 0.93			
Intersection Signal Delay: 52.6		Intersection LOS: D	
Intersection Capacity Utilization 77.9%		ICU Level of Service D	
Analysis Period (min) 15			

DocuSign Envelope ID: 5C03745C-4B01-4834-A65D-B77F558A4F46

95th percentile volume exceeds capacity, queue may be longer.
Queue shown is maximum after two cycles.

Splits and Phases: 5: NC 191 (Brevard Rd) & Blue Ridge Pkwy Access

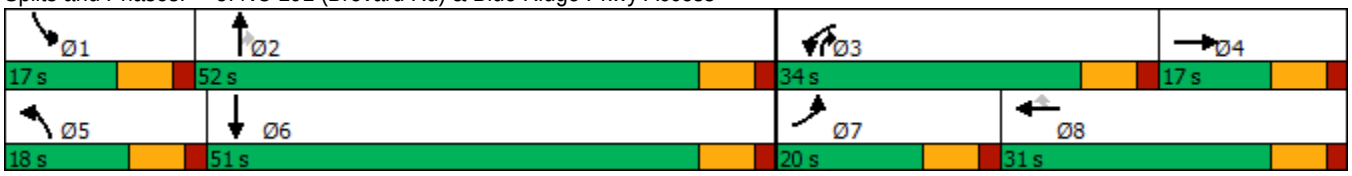

DocuSign Envelope ID: 5C03745C-4B01-4834-A65D-B77F558A4F46

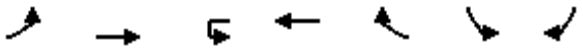

Lane Group	EBL	EBT	WBU	WBT	WBR	SBL	SBR
Lane Configurations							
Traffic Volume (vph)	65	624	0	698	687	614	65
Future Volume (vph)	65	624	0	698	687	614	65
Ideal Flow (vphpl)	1900	1900	1900	1900	1900	1900	1900
Grade (%)		-9%		5%		-9%	
Storage Length (ft)	500		350		0	0	400
Storage Lanes	1		1		1	2	1
Taper Length (ft)	25		25			25	
Lane Util. Factor	1.00	1.00	1.00	1.00	1.00	0.97	1.00
Frt					0.850		0.850
Flt Protected	0.950					0.950	
Satd. Flow (prot)	1715	1805	1715	1715	1458	3485	1607
Flt Permitted	0.950					0.950	
Satd. Flow (perm)	1715	1805	1715	1715	1458	3485	1607
Right Turn on Red					No		No
Satd. Flow (RTOR)							
Link Speed (mph)		35		35		45	
Link Distance (ft)		1579		1808		1089	
Travel Time (s)		30.8		35.2		16.5	
Peak Hour Factor	0.90	0.90	0.90	0.90	0.90	0.90	0.90
Heavy Vehicles (%)	10%	10%	8%	8%	8%	5%	5%
Adj. Flow (vph)	72	693	0	776	763	682	72
Shared Lane Traffic (%)							
Lane Group Flow (vph)	72	693	0	776	763	682	72
Enter Blocked Intersection	No	No	No	No	No	No	No
Lane Alignment	Left	Left	R NA	Left	Right	Left	Right
Median Width(ft)		12		12		24	
Link Offset(ft)		0		0		0	
Crosswalk Width(ft)		16		16		16	
Two way Left Turn Lane							
Headway Factor	0.94	0.94	1.03	1.03	1.03	0.94	0.94
Turning Speed (mph)	15		9		9	15	9
Number of Detectors	1	2	1	2	1	1	1
Detector Template	Left	Thru	Left	Thru	Right	Left	Right
Leading Detector (ft)	20	100	20	100	20	20	20
Trailing Detector (ft)	0	0	0	0	0	0	0
Detector 1 Position(ft)	0	0	0	0	0	0	0
Detector 1 Size(ft)	20	6	20	6	20	20	20
Detector 1 Type	Cl+Ex	Cl+Ex	Cl+Ex	Cl+Ex	Cl+Ex	Cl+Ex	Cl+Ex
Detector 1 Channel							
Detector 1 Extend (s)	0.0	0.0	0.0	0.0	0.0	0.0	0.0
Detector 1 Queue (s)	0.0	0.0	0.0	0.0	0.0	0.0	0.0
Detector 1 Delay (s)	0.0	0.0	0.0	0.0	0.0	0.0	0.0
Detector 2 Position(ft)		94		94			
Detector 2 Size(ft)		6		6			
Detector 2 Type		Cl+Ex		Cl+Ex			
Detector 2 Channel							
Detector 2 Extend (s)		0.0		0.0			
Turn Type	Prot	NA	Prot	NA	pm+ov	Prot	pm+ov

DocuSign Envelope ID: 5C03745C-4B01-4834-A65D-B77F558A4F46

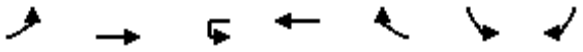

Lane Group	EBL	EBT	WBU	WBT	WBR	SBL	SBR
Protected Phases	5	2	1	6	4	4	5
Permitted Phases					6		4
Detector Phase	5	2	1	6	4	4	5
Switch Phase							
Minimum Initial (s)	7.0	10.0	7.0	10.0	7.0	7.0	7.0
Minimum Split (s)	13.7	17.3	13.3	17.3	13.8	13.8	13.7
Total Split (s)	16.0	101.0	14.0	99.0	45.0	45.0	16.0
Total Split (%)	10.0%	63.1%	8.8%	61.9%	28.1%	28.1%	10.0%
Maximum Green (s)	9.3	93.7	7.7	91.7	38.2	38.2	9.3
Yellow Time (s)	3.3	4.6	3.0	4.6	3.3	3.3	3.3
All-Red Time (s)	3.4	2.7	3.3	2.7	3.5	3.5	3.4
Lost Time Adjust (s)	-1.7	-2.3	-1.3	-2.3	-2.3	-1.8	-1.8
Total Lost Time (s)	5.0	5.0	5.0	5.0	4.5	5.0	4.9
Lead/Lag	Lag	Lead	Lag	Lead			Lag
Lead-Lag Optimize?	Yes	Yes	Yes	Yes			Yes
Vehicle Extension (s)	2.0	3.0	2.0	3.0	3.0	3.0	2.0
Recall Mode	None	C-Max	None	C-Max	None	None	None
Act Effct Green (s)	10.5	111.9		96.4	140.0	38.1	53.7
Actuated g/C Ratio	0.07	0.70		0.60	0.88	0.24	0.34
v/c Ratio	0.64	0.55		0.75	0.60	0.82	0.13
Control Delay	97.8	14.1		20.7	2.8	66.8	36.8
Queue Delay	0.0	0.0		0.0	0.0	0.0	0.0
Total Delay	97.8	14.1		20.7	2.8	66.8	36.8
LOS	F	B		C	A	E	D
Approach Delay		21.9		11.8		63.9	
Approach LOS		C		B		E	
Queue Length 50th (ft)	75	344		619	34	345	51
Queue Length 95th (ft)	#141	448		846	40	421	91
Internal Link Dist (ft)		1499		1728		1009	
Turn Bay Length (ft)	500						400
Base Capacity (vph)	117	1262		1033	1271	871	534
Starvation Cap Reductn	0	0		0	0	0	0
Spillback Cap Reductn	0	0		0	0	0	0
Storage Cap Reductn	0	0		0	0	0	0
Reduced v/c Ratio	0.62	0.55		0.75	0.60	0.78	0.13

Intersection Summary			
Area Type:	Other		
Cycle Length: 160			
Actuated Cycle Length: 160			
Offset: 41 (26%), Referenced to phase 2:EBT and 6:WBT, Start of Green			
Natural Cycle: 90			
Control Type: Actuated-Coordinated			
Maximum v/c Ratio: 0.82			
Intersection Signal Delay: 27.2		Intersection LOS: C	
Intersection Capacity Utilization 72.6%		ICU Level of Service C	
Analysis Period (min) 15			
# 95th percentile volume exceeds capacity, queue may be longer.			
Queue shown is maximum after two cycles.			

DocuSign Envelope ID: 5C03745C-4B01-4834-A65D-B77F558A4F46

Splits and Phases: 8: NC 146 (Long Shoals Rd) & Clayton Rd

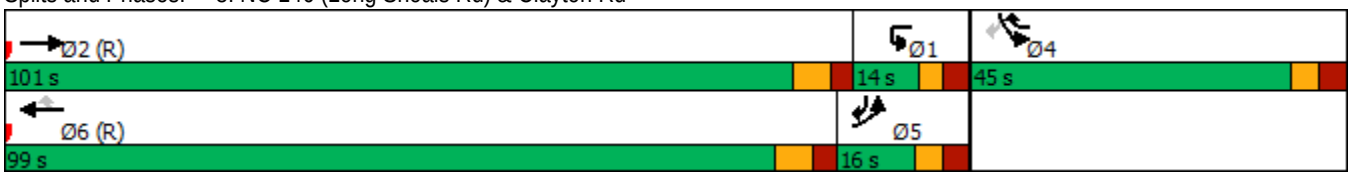

DocuSign Envelope ID: 5C03745C-4B01-4834-A65D-B77F558A4F46

Intersection	
Int Delay, s/veh	22.1

Movement	EBU	EBT	EBR	WBL	WBT	NBL	NBR
Lane Configurations							
Traffic Vol, veh/h	0	1238	52	486	1197	31	276
Future Vol, veh/h	0	1238	52	486	1197	31	276
Conflicting Peds, #/hr	0	0	0	0	0	0	0
Sign Control	Free	Free	Free	Free	Free	Stop	Stop
RT Channelized	-	-	None	-	None	-	Stop
Storage Length	325	-	-	325	-	200	0
Veh in Median Storage, #	-	0	-	-	0	0	-
Grade, %	-	0	-	-	0	0	-
Peak Hour Factor	90	90	90	90	90	90	90
Heavy Vehicles, %	8	8	8	8	8	3	3
Mvmt Flow	0	1376	58	540	1330	34	307

Major/Minor	Major1			Major2		Minor1	
Conflicting Flow All	1330	0	0	1434	0	3150	717
Stage 1	-	-	-	-	-	1405	-
Stage 2	-	-	-	-	-	1745	-
Critical Hdwy	6.56	-	-	4.26	-	6.86	6.96
Critical Hdwy Stg 1	-	-	-	-	-	5.86	-
Critical Hdwy Stg 2	-	-	-	-	-	5.86	-
Follow-up Hdwy	2.58	-	-	2.28	-	3.53	3.33
Pot Cap-1 Maneuver	192	-	-	~ 440	-	~ 8	370
Stage 1	-	-	-	-	-	191	-
Stage 2	-	-	-	-	-	124	-
Platoon blocked, %		-	-		-		
Mov Cap-1 Maneuver	192	-	-	~ 440	-	0	370
Mov Cap-2 Maneuver	-	-	-	-	-	0	-
Stage 1	-	-	-	-	-	191	-
Stage 2	-	-	-	-	-	0	-

Approach	EB	WB	NB
HCM Control Delay, s	0	43	
HCM LOS			-

Minor Lane/Major Mvmt	NBLn1	NBLn2	EBU	EBT	EBR	WBL	WBT
Capacity (veh/h)	-	370	192	-	-	~ 440	-
HCM Lane V/C Ratio	-	0.829	-	-	-	1.227	-
HCM Control Delay (s)	-	47.7	0	-	-	148.8	-
HCM Lane LOS	-	E	A	-	-	F	-
HCM 95th %tile Q(veh)	-	7.5	0	-	-	21.8	-

Notes			
~: Volume exceeds capacity	$: Delay exceeds 300s	+: Computation Not Defined	*: All major volume in platoon

DocuSign Envelope ID: 5C03745C-4B01-4834-A65D-B77F558A4F46

Lane Group	EBL	EBT	EBR2	WBL	WBT	SEL	SER2	NWL
Lane Configurations								
Traffic Volume (vph)	261	915	338	627	1049	801	294	340
Future Volume (vph)	261	915	338	627	1049	801	294	340
Ideal Flow (vphpl)	1900	1900	1900	1900	1900	1900	1900	1900
Grade (%)		3%			-7%			
Storage Length (ft)	475			0		0		0
Storage Lanes	2			2		2		2
Taper Length (ft)	25			25		25		25
Lane Util. Factor	0.97	0.95	1.00	0.97	0.95	0.97	1.00	0.97
Frt			0.850				0.850	
Flt Protected	0.950			0.950		0.950		0.950
Satd. Flow (prot)	3080	3292	1420	3236	3593	3434	1525	3291
Flt Permitted	0.950			0.950		0.950		0.950
Satd. Flow (perm)	3080	3292	1420	3236	3593	3434	1525	3291
Right Turn on Red			Yes				Yes	
Satd. Flow (RTOR)			174				176	
Link Speed (mph)		45			45			
Link Distance (ft)		1000			418			
Travel Time (s)		15.2			6.3			
Peak Hour Factor	0.90	0.90	0.90	0.90	0.90	0.90	0.90	0.90
Heavy Vehicles (%)	12%	8%	12%	12%	4%	4%	8%	8%
Adj. Flow (vph)	290	1017	376	697	1166	890	327	378
Shared Lane Traffic (%)								
Lane Group Flow (vph)	290	1017	376	697	1166	890	327	378
Enter Blocked Intersection	No	No	No	No	No	No	No	No
Lane Alignment	Left	Left	Right	Left	Left	Left	Right	Left
Median Width(ft)		24			24			
Link Offset(ft)		0			0			
Crosswalk Width(ft)		16			16			
Two way Left Turn Lane								
Headway Factor	1.02	1.02	1.02	0.96	0.96	0.97	0.97	0.98
Turning Speed (mph)	15		9	15		15	9	15
Number of Detectors	1	2	1	1	2	1	1	1
Detector Template	Left	Thru	Right	Left	Thru	Left	Right	Left
Leading Detector (ft)	20	100	20	20	100	20	20	20
Trailing Detector (ft)	0	0	0	0	0	0	0	0
Detector 1 Position(ft)	0	0	0	0	0	0	0	0
Detector 1 Size(ft)	20	6	20	20	6	20	20	20
Detector 1 Type	Cl+Ex	Cl+Ex	Cl+Ex	Cl+Ex	Cl+Ex	Cl+Ex	Cl+Ex	Cl+Ex
Detector 1 Channel								
Detector 1 Extend (s)	0.0	0.0	0.0	0.0	0.0	0.0	0.0	0.0
Detector 1 Queue (s)	0.0	0.0	0.0	0.0	0.0	0.0	0.0	0.0
Detector 1 Delay (s)	0.0	0.0	0.0	0.0	0.0	0.0	0.0	0.0
Detector 2 Position(ft)		94			94			
Detector 2 Size(ft)		6			6			
Detector 2 Type		Cl+Ex			Cl+Ex			
Detector 2 Channel								
Detector 2 Extend (s)		0.0			0.0			
Turn Type	Prot	NA	Free	Prot	NA	Prot	Free	Prot

DocuSign Envelope ID: 5C03745C-4B01-4834-A65D-B77F558A4F46



Lane Group	EBL	EBT	EBR2	WBL	WBT	SEL	SER2	NWL
Protected Phases	5	2		1	6	4		8
Permitted Phases			Free				Free	
Detector Phase	5	2		1	6	4		8
Switch Phase								
Minimum Initial (s)	7.0	12.0		7.0	12.0	7.0		7.0
Minimum Split (s)	15.3	21.0		14.5	21.0	15.0		15.0
Total Split (s)	28.0	84.0		37.0	93.0	39.0		39.0
Total Split (%)	17.5%	52.5%		23.1%	58.1%	24.4%		24.4%
Maximum Green (s)	19.7	75.0		29.5	84.0	31.0		31.0
Yellow Time (s)	3.1	5.2		3.6	5.2	3.5		3.5
All-Red Time (s)	5.2	3.8		3.9	3.8	4.5		4.5
Lost Time Adjust (s)	-3.3	-4.0		-2.5	-4.0	-3.0		-3.0
Total Lost Time (s)	5.0	5.0		5.0	5.0	5.0		5.0
Lead/Lag	Lag	Lead		Lag	Lead			
Lead-Lag Optimize?	Yes	Yes		Yes	Yes			
Vehicle Extension (s)	2.0	6.0		2.0	6.0	2.0		2.0
Minimum Gap (s)	0.2	3.0		0.2	3.0	0.2		0.2
Time Before Reduce (s)	0.0	15.0		0.0	15.0	0.0		0.0
Time To Reduce (s)	0.0	30.0		0.0	30.0	0.0		0.0
Recall Mode	None	C-Max		None	C-Max	None		None
Act Effct Green (s)	23.0	79.0	160.0	32.0	88.0	34.0	160.0	34.0
Actuated g/C Ratio	0.14	0.49	1.00	0.20	0.55	0.21	1.00	0.21
v/c Ratio	0.66	0.63	0.26	1.08	0.59	1.22	0.21	0.54
Control Delay	61.4	25.9	0.4	112.1	14.7	162.6	0.3	59.4
Queue Delay	0.0	1.9	0.0	9.2	1.2	4.5	0.0	0.0
Total Delay	61.4	27.8	0.4	121.3	15.9	167.1	0.3	59.4
LOS	E	C	A	F	B	F	A	E
Approach Delay		27.4			55.4			
Approach LOS		C			E			
Queue Length 50th (ft)	146	292	0	~427	257	~586	0	183
Queue Length 95th (ft)	m200	337	0	#559	318	#721	0	239
Internal Link Dist (ft)		920			338			
Turn Bay Length (ft)	475							
Base Capacity (vph)	442	1625	1420	647	1976	729	1525	699
Starvation Cap Reductn	0	0	0	36	540	0	0	0
Spillback Cap Reductn	0	425	0	0	0	318	0	0
Storage Cap Reductn	0	0	0	0	0	0	0	0
Reduced v/c Ratio	0.66	0.85	0.26	1.14	0.81	2.17	0.21	0.54

Intersection Summary			
Area Type:	Other		
Cycle Length: 160			
Actuated Cycle Length: 160			
Offset: 0 (0%), Referenced to phase 2:EBT and 6:WBT, Start of Green, Master Intersection			
Natural Cycle: 150			
Control Type: Actuated-Coordinated			
Maximum v/c Ratio: 1.22			
Intersection Signal Delay: 62.4		Intersection LOS: E	
Intersection Capacity Utilization 78.5%		ICU Level of Service D	

DocuSign Envelope ID: 5C03745C-4B01-4834-A65D-B77F558A4F46

Analysis Period (min) 15

~ Volume exceeds capacity, queue is theoretically infinite.
Queue shown is maximum after two cycles.

95th percentile volume exceeds capacity, queue may be longer.
Queue shown is maximum after two cycles.

m Volume for 95th percentile queue is metered by upstream signal.

Splits and Phases: 10: I-26 Ramp & NC 146 (Long Shoals Rd)

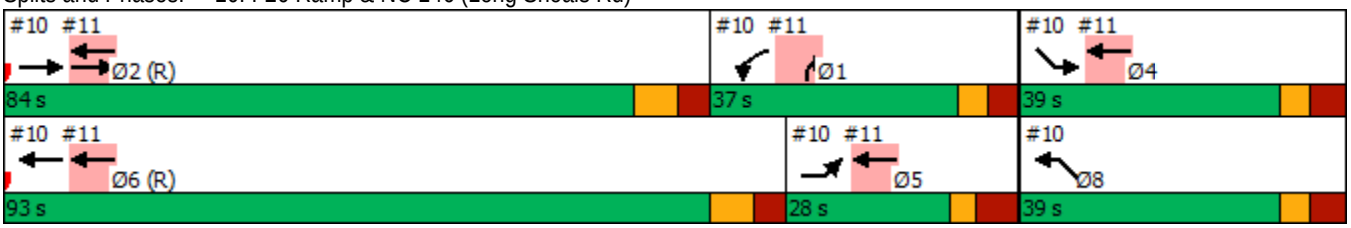

DocuSign Envelope ID: 5C03745C-4B01-4834-A65D-B77F558A4F46

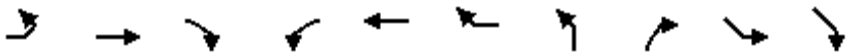

Lane Group	EBL	EBT	EBR	WBL	WBT	WBR	NBL	NBR	SEL	SER	Ø4	Ø5
Lane Configurations												
Traffic Volume (vph)	0	1716	0	0	1676	814	0	551	0	0		
Future Volume (vph)	0	1716	0	0	1676	814	0	551	0	0		
Ideal Flow (vphpl)	1900	1900	1900	1900	1900	1900	1900	1900	1900	1900		
Storage Length (ft)	0		0	0		275	0	0	0	0		
Storage Lanes	0		0	0		1	0	2	0	0		
Taper Length (ft)	25			25			25		25			
Lane Util. Factor	1.00	0.95	1.00	1.00	0.95	1.00	1.00	0.88	1.00	1.00		
Frt						0.850		0.850				
Flt Protected												
Satd. Flow (prot)	0	3471	0	0	3471	1442	0	2733	0	0		
Flt Permitted												
Satd. Flow (perm)	0	3471	0	0	3471	1442	0	2733	0	0		
Right Turn on Red			No			No		No				
Satd. Flow (RTOR)												
Link Speed (mph)		45			45		45		45			
Link Distance (ft)		418			593		396		464			
Travel Time (s)		6.3			9.0		6.0		7.0			
Peak Hour Factor	0.90	0.90	0.90	0.90	0.90	0.90	0.90	0.90	0.90	0.90		
Heavy Vehicles (%)	2%	4%	2%	2%	4%	12%	2%	4%	2%	2%		
Adj. Flow (vph)	0	1907	0	0	1862	904	0	612	0	0		
Shared Lane Traffic (%)												
Lane Group Flow (vph)	0	1907	0	0	1862	904	0	612	0	0		
Enter Blocked Intersection	No	No	No	No	No	No	No	No	No	No		
Lane Alignment	Left	L NA	Right	Left	Right	Right	Left	R NA	Left	Right		
Median Width(ft)		0			24		0		0			
Link Offset(ft)		0			0		0		0			
Crosswalk Width(ft)		16			16		16		16			
Two way Left Turn Lane												
Headway Factor	1.00	1.00	1.00	1.00	1.00	1.00	1.00	1.00	1.00	1.00		
Turning Speed (mph)	15		9	15		9	15	9	15	9		
Number of Detectors		2			2	1		1				
Detector Template		Thru			Thru	Right		Right				
Leading Detector (ft)		100			100	20		20				
Trailing Detector (ft)		0			0	0		0				
Detector 1 Position(ft)		0			0	0		0				
Detector 1 Size(ft)		6			6	20		20				
Detector 1 Type		Cl+Ex			Cl+Ex	Cl+Ex		Cl+Ex				
Detector 1 Channel												
Detector 1 Extend (s)		0.0			0.0	0.0		0.0				
Detector 1 Queue (s)		0.0			0.0	0.0		0.0				
Detector 1 Delay (s)		0.0			0.0	0.0		0.0				
Detector 2 Position(ft)		94			94							
Detector 2 Size(ft)		6			6							
Detector 2 Type		Cl+Ex			Cl+Ex							
Detector 2 Channel												
Detector 2 Extend (s)		0.0			0.0							
Turn Type		NA			NA	Free		Prot				
Protected Phases		2			2 4 5 6			1			4	5

DocuSign Envelope ID: 5C03745C-4B01-4834-A65D-B77F558A4F46

Lane Group	Ø6	Ø8
Lane Configurations		
Traffic Volume (vph)		
Future Volume (vph)		
Ideal Flow (vphpl)		
Storage Length (ft)		
Storage Lanes		
Taper Length (ft)		
Lane Util. Factor		
Frt		
Flt Protected		
Satd. Flow (prot)		
Flt Permitted		
Satd. Flow (perm)		
Right Turn on Red		
Satd. Flow (RTOR)		
Link Speed (mph)		
Link Distance (ft)		
Travel Time (s)		
Peak Hour Factor		
Heavy Vehicles (%)		
Adj. Flow (vph)		
Shared Lane Traffic (%)		
Lane Group Flow (vph)		
Enter Blocked Intersection		
Lane Alignment		
Median Width(ft)		
Link Offset(ft)		
Crosswalk Width(ft)		
Two way Left Turn Lane		
Headway Factor		
Turning Speed (mph)		
Number of Detectors		
Detector Template		
Leading Detector (ft)		
Trailing Detector (ft)		
Detector 1 Position(ft)		
Detector 1 Size(ft)		
Detector 1 Type		
Detector 1 Channel		
Detector 1 Extend (s)		
Detector 1 Queue (s)		
Detector 1 Delay (s)		
Detector 2 Position(ft)		
Detector 2 Size(ft)		
Detector 2 Type		
Detector 2 Channel		
Detector 2 Extend (s)		
Turn Type		
Protected Phases	6	8

DocuSign Envelope ID: 5C03745C-4B01-4834-A65D-B77F558A4F46

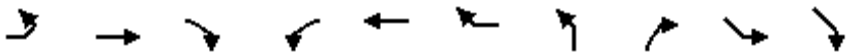

Lane Group	EBL	EBT	EBR	WBL	WBT	WBR	NBL	NBR	SEL	SER	Ø4	Ø5
Permitted Phases						Free						
Detector Phase		2			2 4 5 6			1				
Switch Phase												
Minimum Initial (s)		12.0						7.0			7.0	7.0
Minimum Split (s)		21.0						14.5			15.0	15.3
Total Split (s)		84.0						37.0			39.0	28.0
Total Split (%)		52.5%						23.1%			24%	18%
Maximum Green (s)		75.0						29.5			31.0	19.7
Yellow Time (s)		5.2						3.6			3.5	3.1
All-Red Time (s)		3.8						3.9			4.5	5.2
Lost Time Adjust (s)		0.0						0.0				
Total Lost Time (s)		9.0						7.5				
Lead/Lag		Lead						Lag				Lag
Lead-Lag Optimize?		Yes						Yes				Yes
Vehicle Extension (s)		6.0						2.0			2.0	2.0
Minimum Gap (s)		3.0						0.2			0.2	0.2
Time Before Reduce (s)		15.0						0.0			0.0	0.0
Time To Reduce (s)		30.0						0.0			0.0	0.0
Recall Mode		C-Max						None			None	None
Act Effct Green (s)		75.0			160.0	160.0		29.5				
Actuated g/C Ratio		0.47			1.00	1.00		0.18				
v/c Ratio		1.17			0.54	0.63		1.22				
Control Delay		109.1			0.2	2.4		167.2				
Queue Delay		0.1			0.1	0.0		0.6				
Total Delay		109.3			0.3	2.4		167.8				
LOS		F			A	A		F				
Approach Delay		109.3			1.0		167.8					
Approach LOS		F			A		F					
Queue Length 50th (ft)		~1254			0	32		~443				
Queue Length 95th (ft)		m#1140			m0	m0		#582				
Internal Link Dist (ft)		338			513		316		384			
Turn Bay Length (ft)						275						
Base Capacity (vph)		1627			3471	1442		503				
Starvation Cap Reductn		68			0	0		0				
Spillback Cap Reductn		14			427	0		34				
Storage Cap Reductn		0			0	0		0				
Reduced v/c Ratio		1.22			0.61	0.63		1.30				

Intersection Summary			
Area Type:	Other		
Cycle Length: 160			
Actuated Cycle Length: 160			
Offset: 0 (0%), Referenced to phase 2:EBT and 6:WBT, Start of Green, Master Intersection			
Natural Cycle: 150			
Control Type: Actuated-Coordinated			
Maximum v/c Ratio: 1.22			
Intersection Signal Delay: 59.4		Intersection LOS: E	
Intersection Capacity Utilization 80.5%		ICU Level of Service D	
Analysis Period (min) 15			

DocuSign Envelope ID: 5C03745C-4B01-4834-A65D-B77F558A4F46

Lane Group	Ø6	Ø8
Permitted Phases		
Detector Phase		
Switch Phase		
Minimum Initial (s)	12.0	7.0
Minimum Split (s)	21.0	15.0
Total Split (s)	93.0	39.0
Total Split (%)	58%	24%
Maximum Green (s)	84.0	31.0
Yellow Time (s)	5.2	3.5
All-Red Time (s)	3.8	4.5
Lost Time Adjust (s)		
Total Lost Time (s)		
Lead/Lag	Lead	
Lead-Lag Optimize?	Yes	
Vehicle Extension (s)	6.0	2.0
Minimum Gap (s)	3.0	0.2
Time Before Reduce (s)	15.0	0.0
Time To Reduce (s)	30.0	0.0
Recall Mode	C-Max	None
Act Effct Green (s)		
Actuated g/C Ratio		
v/c Ratio		
Control Delay		
Queue Delay		
Total Delay		
LOS		
Approach Delay		
Approach LOS		
Queue Length 50th (ft)		
Queue Length 95th (ft)		
Internal Link Dist (ft)		
Turn Bay Length (ft)		
Base Capacity (vph)		
Starvation Cap Reductn		
Spillback Cap Reductn		
Storage Cap Reductn		
Reduced v/c Ratio		

Intersection Summary

DocuSign Envelope ID: 5C03745C-4B01-4834-A65D-B77F558A4F46

~ Volume exceeds capacity, queue is theoretically infinite.
Queue shown is maximum after two cycles.
95th percentile volume exceeds capacity, queue may be longer.
Queue shown is maximum after two cycles.
m Volume for 95th percentile queue is metered by upstream signal.

Splits and Phases: 11: I-26 NWB Ramp & NC 146 (Long Shoals Rd)

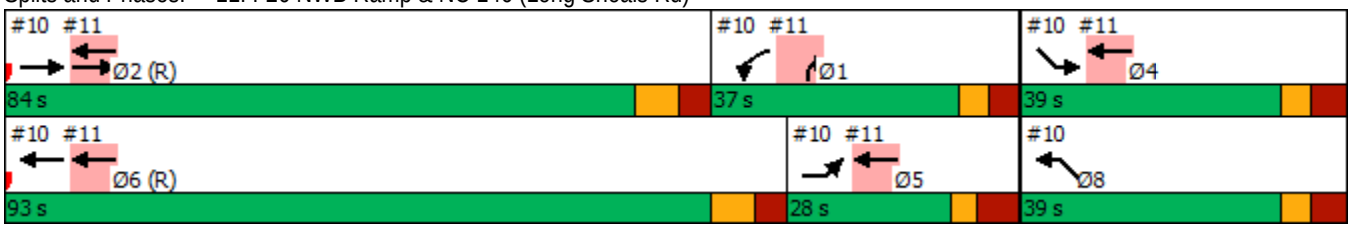

DocuSign Envelope ID: 5C03745C-4B01-4834-A65D-B77F558A4F46

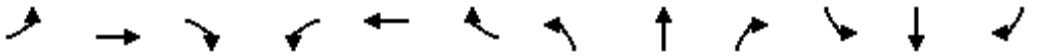

Lane Group	EBL	EBT	EBR	WBL	WBT	WBR	NBL	NBT	NBR	SBL	SBT	SBR
Lane Configurations												
Traffic Volume (vph)	701	1499	67	17	1545	462	84	41	20	509	40	861
Future Volume (vph)	701	1499	67	17	1545	462	84	41	20	509	40	861
Ideal Flow (vphpl)	1900	1900	1900	1900	1900	1900	1900	1900	1900	1900	1900	1900
Grade (%)		6%			-6%			11%			7%	
Storage Length (ft)	350		400	250		225	0		0	450		0
Storage Lanes	2		1	1		1	0		0	1		1
Taper Length (ft)	25			25			25			25		
Lane Util. Factor	0.97	0.95	1.00	1.00	0.95	1.00	1.00	1.00	1.00	0.95	0.95	1.00
Frt			0.850			0.850		0.982				0.850
Flt Protected	0.950			0.950				0.972		0.950	0.959	
Satd. Flow (prot)	3266	3367	1506	1788	3575	1599	0	1632	0	1561	1576	1470
Flt Permitted	0.950			0.950				0.972		0.950	0.959	
Satd. Flow (perm)	3266	3367	1506	1788	3575	1599	0	1632	0	1561	1576	1470
Right Turn on Red			No			No			No			No
Satd. Flow (RTOR)												
Link Speed (mph)		45			45			25			25	
Link Distance (ft)		593			1582			722			992	
Travel Time (s)		9.0			24.0			19.7			27.1	
Peak Hour Factor	0.90	0.90	0.90	0.90	0.90	0.90	0.90	0.90	0.90	0.90	0.90	0.90
Heavy Vehicles (%)	4%	4%	4%	4%	4%	4%	5%	5%	5%	6%	6%	6%
Adj. Flow (vph)	779	1666	74	19	1717	513	93	46	22	566	44	957
Shared Lane Traffic (%)										46%		
Lane Group Flow (vph)	779	1666	74	19	1717	513	0	161	0	306	304	957
Enter Blocked Intersection	No	No	No	No	No	No	No	No	No	No	No	No
Lane Alignment	Left	Left	Right	Left	Left	Right	Left	Left	Right	Left	Left	Right
Median Width(ft)		24			24			0			12	
Link Offset(ft)		0			0			0			0	
Crosswalk Width(ft)		16			16			16			16	
Two way Left Turn Lane												
Headway Factor	1.04	1.04	1.04	0.96	0.96	0.96	1.08	1.08	1.08	1.05	1.05	1.05
Turning Speed (mph)	15		9	15		9	15		9	15		9
Number of Detectors	1	2	1	1	2	1	1	2		1	2	1
Detector Template	Left	Thru	Right	Left	Thru	Right	Left	Thru		Left	Thru	Right
Leading Detector (ft)	20	100	20	20	100	20	20	100		20	100	20
Trailing Detector (ft)	0	0	0	0	0	0	0	0		0	0	0
Detector 1 Position(ft)	0	0	0	0	0	0	0	0		0	0	0
Detector 1 Size(ft)	20	6	20	20	6	20	20	6		20	6	20
Detector 1 Type	Cl+Ex	Cl+Ex	Cl+Ex	Cl+Ex	Cl+Ex	Cl+Ex	Cl+Ex	Cl+Ex		Cl+Ex	Cl+Ex	Cl+Ex
Detector 1 Channel												
Detector 1 Extend (s)	0.0	0.0	0.0	0.0	0.0	0.0	0.0	0.0		0.0	0.0	0.0
Detector 1 Queue (s)	0.0	0.0	0.0	0.0	0.0	0.0	0.0	0.0		0.0	0.0	0.0
Detector 1 Delay (s)	0.0	0.0	0.0	0.0	0.0	0.0	0.0	0.0		0.0	0.0	0.0
Detector 2 Position(ft)		94			94			94			94	
Detector 2 Size(ft)		6			6			6			6	
Detector 2 Type		Cl+Ex			Cl+Ex			Cl+Ex			Cl+Ex	
Detector 2 Channel												
Detector 2 Extend (s)		0.0			0.0			0.0			0.0	
Turn Type	Prot	NA	pm+ov	Prot	NA	pm+ov	Split	NA		Split	NA	pm+ov

DocuSign Envelope ID: 5C03745C-4B01-4834-A65D-B77F558A4F46

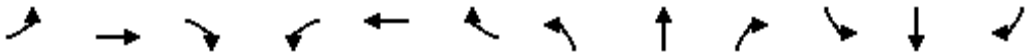

Lane Group	EBL	EBT	EBR	WBL	WBT	WBR	NBL	NBT	NBR	SBL	SBT	SBR
Protected Phases	5	2	4	1	6	3	4	4		3	3	5
Permitted Phases			2			6						3
Detector Phase	5	2	4	1	6	3	4	4		3	3	5
Switch Phase												
Minimum Initial (s)	7.0	12.0	7.0	7.0	12.0	7.0	7.0	7.0		7.0	7.0	7.0
Minimum Split (s)	13.3	20.7	39.3	13.3	32.6	13.4	39.3	39.3		13.4	13.4	13.3
Total Split (s)	49.0	99.0	18.0	14.0	64.0	29.0	18.0	18.0		29.0	29.0	49.0
Total Split (%)	30.6%	61.9%	11.3%	8.8%	40.0%	18.1%	11.3%	11.3%		18.1%	18.1%	30.6%
Maximum Green (s)	42.7	93.3	11.7	7.7	57.4	22.6	11.7	11.7		22.6	22.6	42.7
Yellow Time (s)	3.0	4.1	3.0	3.1	5.1	3.0	3.0	3.0		3.0	3.0	3.0
All-Red Time (s)	3.3	1.6	3.3	3.2	1.5	3.4	3.3	3.3		3.4	3.4	3.3
Lost Time Adjust (s)	-1.3	-0.7	-1.3	-1.3	-1.6	-1.4		-1.3		-1.4	-1.4	-1.3
Total Lost Time (s)	5.0	5.0	5.0	5.0	5.0	5.0		5.0		5.0	5.0	5.0
Lead/Lag	Lag	Lead	Lead	Lag	Lead	Lag	Lead	Lead		Lag	Lag	Lag
Lead-Lag Optimize?	Yes	Yes	Yes	Yes	Yes	Yes	Yes	Yes		Yes	Yes	Yes
Vehicle Extension (s)	3.0	6.0	3.0	2.0	6.0	3.0	3.0	3.0		3.0	3.0	3.0
Minimum Gap (s)	0.2	3.0	0.2	0.2	3.0	0.2	0.2	0.2		0.2	0.2	0.2
Time Before Reduce (s)	0.0	20.0	0.0	0.0	20.0	0.0	0.0	0.0		0.0	0.0	0.0
Time To Reduce (s)	0.0	30.0	0.0	0.0	30.0	0.0	0.0	0.0		0.0	0.0	0.0
Recall Mode	None	C-Max	None	None	C-Max	None	None	None		None	None	None
Walk Time (s)		7.0	7.0		7.0		7.0	7.0				
Flash Dont Walk (s)		8.0	26.0		19.0		26.0	26.0				
Pedestrian Calls (#/hr)		0	0		0		0	0				
Act Effct Green (s)	44.0	99.6	114.6	8.7	59.0	88.0		13.0		24.0	24.0	68.0
Actuated g/C Ratio	0.28	0.62	0.72	0.05	0.37	0.55		0.08		0.15	0.15	0.42
v/c Ratio	0.87	0.79	0.07	0.20	1.30	0.58		1.22		1.31	1.29	1.53
Control Delay	46.0	12.6	2.3	77.1	182.3	27.2		206.4		216.0	208.7	275.0
Queue Delay	0.0	3.8	0.0	0.0	0.0	0.0		0.0		0.0	0.0	0.0
Total Delay	46.0	16.3	2.3	77.1	182.3	27.2		206.4		216.0	208.7	275.0
LOS	D	B	A	E	F	C		F		F	F	F
Approach Delay		25.1			146.1			206.4			250.6	
Approach LOS		C			F			F			F	
Queue Length 50th (ft)	431	246	5	19	~1206	347		~205		~430	~424	~1243
Queue Length 95th (ft)	m332	m208	m4	50	#1342	466		#364		#641	#633	#1659
Internal Link Dist (ft)		513			1502			642			912	
Turn Bay Length (ft)	350		400	250		225				450		
Base Capacity (vph)	898	2096	1078	100	1318	879		132		234	236	624
Starvation Cap Reductn	0	341	0	0	0	0		0		0	0	0
Spillback Cap Reductn	0	0	0	0	8	0		0		0	0	0
Storage Cap Reductn	0	0	0	0	0	0		0		0	0	0
Reduced v/c Ratio	0.87	0.95	0.07	0.19	1.31	0.58		1.22		1.31	1.29	1.53

Intersection Summary	
Area Type:	Other
Cycle Length: 160	
Actuated Cycle Length: 160	
Offset: 149 (93%), Referenced to phase 2:EBT and 6:WBT, Start of Green	
Natural Cycle: 150	
Control Type: Actuated-Coordinated	

DocuSign Envelope ID: 5C03745C-4B01-4834-A65D-B77F558A4F46

Maximum v/c Ratio: 1.53	
Intersection Signal Delay: 125.9	Intersection LOS: F
Intersection Capacity Utilization 116.5%	ICU Level of Service H
Analysis Period (min) 15	

~ Volume exceeds capacity, queue is theoretically infinite.
Queue shown is maximum after two cycles.

95th percentile volume exceeds capacity, queue may be longer.
Queue shown is maximum after two cycles.

m Volume for 95th percentile queue is metered by upstream signal.

Splits and Phases: 12: Skyland Inn Dr/Schenck Pkwy & NC 146 (Long Shoals Rd)

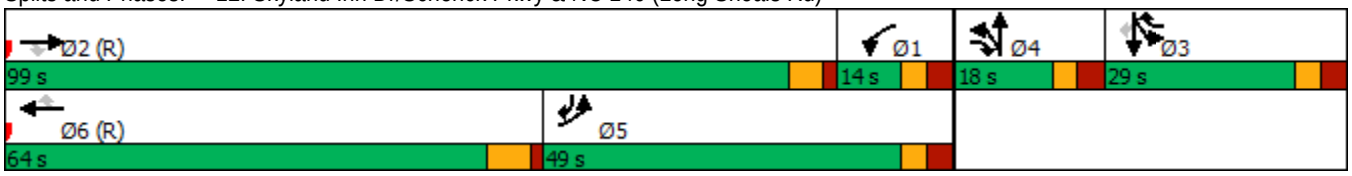

DocuSign Envelope ID: 5C03745C-4B01-4834-A65D-B77F558A4F46

Appendix N – 2021 Build Scenario 1 Synchro Results

Note that the report describes the directions of I-26 as they are signed (eastbound and westbound) while the Synchro files use ordinal direction of the ramps in the description. For clarification, southeast-bound ramps enter or exit from eastbound I-26 while northwest-bound ramps enter or exit from I-26 westbound.

DocuSign Envelope ID: 5C03745C-4B01-4834-A65D-B77F558A4F46

2021 Build - Scenario 1 - AM

DocuSign Envelope ID: 5C03745C-4B01-4834-A65D-B77F558A4F46

Intersection	
Int Delay, s/veh	2.2

Movement	EBL	EBR	NBL	NBT	SBT	SBR
Lane Configurations						
Traffic Vol, veh/h	43	18	20	86	119	63
Future Vol, veh/h	43	18	20	86	119	63
Conflicting Peds, #/hr	0	0	0	0	0	0
Sign Control	Stop	Stop	Free	Free	Free	Free
RT Channelized	-	None	-	None	-	None
Storage Length	75	0	275	-	-	-
Veh in Median Storage, #	0	-	-	0	0	-
Grade, %	0	-	-	0	3	-
Peak Hour Factor	90	90	90	90	90	90
Heavy Vehicles, %	2	2	2	2	2	2
Mvmt Flow	48	20	22	96	132	70

Major/Minor	Minor2		Major1		Major2	
Conflicting Flow All	307	167	202	0	-	0
Stage 1	167	-	-	-	-	-
Stage 2	140	-	-	-	-	-
Critical Hdwy	6.42	6.22	4.12	-	-	-
Critical Hdwy Stg 1	5.42	-	-	-	-	-
Critical Hdwy Stg 2	5.42	-	-	-	-	-
Follow-up Hdwy	3.518	3.318	2.218	-	-	-
Pot Cap-1 Maneuver	685	877	1370	-	-	-
Stage 1	863	-	-	-	-	-
Stage 2	887	-	-	-	-	-
Platoon blocked, %				-	-	-
Mov Cap-1 Maneuver	674	877	1370	-	-	-
Mov Cap-2 Maneuver	674	-	-	-	-	-
Stage 1	849	-	-	-	-	-
Stage 2	887	-	-	-	-	-

Approach	EB	NB	SB
HCM Control Delay, s	10.3	1.4	0
HCM LOS	B		

Minor Lane/Major Mvmt	NBL	NBT	EBLn1	EBLn2	SBT	SBR
Capacity (veh/h)	1370	-	674	877	-	-
HCM Lane V/C Ratio	0.016	-	0.071	0.023	-	-
HCM Control Delay (s)	7.7	-	10.7	9.2	-	-
HCM Lane LOS	A	-	B	A	-	-
HCM 95th %tile Q(veh)	0	-	0.2	0.1	-	-

DocuSign Envelope ID: 5C03745C-4B01-4834-A65D-B77F558A4F46

Lane Group	EBL	EBT	EBR	WBL	WBT	WBR	NBL	NBT	NBR	SBL	SBT	SBR
Lane Configurations												
Traffic Volume (vph)	59	37	33	32	48	170	52	600	40	184	527	82
Future Volume (vph)	59	37	33	32	48	170	52	600	40	184	527	82
Ideal Flow (vphpl)	1900	1900	1900	1900	1900	1900	1900	1900	1900	1900	1900	1900
Grade (%)		3%			0%			2%			-7%	
Storage Length (ft)	0		0	200		0	175		150	200		0
Storage Lanes	1		0	1		1	1		1	2		0
Taper Length (ft)	25			25			25			25		
Lane Util. Factor	1.00	0.95	0.95	1.00	1.00	1.00	1.00	0.95	1.00	0.97	0.95	0.95
Frt		0.929				0.850			0.850		0.980	
Flt Protected	0.950			0.950			0.950			0.950		
Satd. Flow (prot)	1743	3239	0	1719	1810	1538	1686	3372	1508	3452	3487	0
Flt Permitted	0.950			0.950			0.950			0.950		
Satd. Flow (perm)	1743	3239	0	1719	1810	1538	1686	3372	1508	3452	3487	0
Right Turn on Red			No			No			No			No
Satd. Flow (RTOR)												
Link Speed (mph)		35			35			45			45	
Link Distance (ft)		248			1200			1589			1600	
Travel Time (s)		4.8			23.4			24.1			24.2	
Peak Hour Factor	0.90	0.90	0.90	0.90	0.90	0.90	0.90	0.90	0.90	0.90	0.90	0.90
Heavy Vehicles (%)	2%	2%	2%	5%	5%	5%	6%	6%	6%	5%	5%	5%
Adj. Flow (vph)	66	41	37	36	53	189	58	667	44	204	586	91
Shared Lane Traffic (%)												
Lane Group Flow (vph)	66	78	0	36	53	189	58	667	44	204	677	0
Enter Blocked Intersection	No	No	No	No	No	No	No	No	No	No	No	No
Lane Alignment	L NA	Left	Right	Left	Left	Left	Left	L NA	Right	Left	Left	Right
Median Width(ft)		12			12			24			24	
Link Offset(ft)		0			0			0			0	
Crosswalk Width(ft)		16			16			16			16	
Two way Left Turn Lane												
Headway Factor	1.02	1.02	1.02	1.00	1.00	1.00	1.01	1.01	1.01	0.96	0.96	0.96
Turning Speed (mph)	15		9	15		9	15		9	15		9
Number of Detectors	1	2		1	2	1	1	2	1	1	2	
Detector Template	Left	Thru		Left	Thru	Right	Left	Thru	Right	Left	Thru	
Leading Detector (ft)	20	100		20	100	20	20	100	20	20	100	
Trailing Detector (ft)	0	0		0	0	0	0	0	0	0	0	
Detector 1 Position(ft)	0	0		0	0	0	0	0	0	0	0	
Detector 1 Size(ft)	20	6		20	6	20	20	6	20	20	6	
Detector 1 Type	Cl+Ex	Cl+Ex		Cl+Ex	Cl+Ex	Cl+Ex	Cl+Ex	Cl+Ex	Cl+Ex	Cl+Ex	Cl+Ex	
Detector 1 Channel												
Detector 1 Extend (s)	0.0	0.0		0.0	0.0	0.0	0.0	0.0	0.0	0.0	0.0	
Detector 1 Queue (s)	0.0	0.0		0.0	0.0	0.0	0.0	0.0	0.0	0.0	0.0	
Detector 1 Delay (s)	0.0	0.0		0.0	0.0	0.0	0.0	0.0	0.0	0.0	0.0	
Detector 2 Position(ft)		94			94			94			94	
Detector 2 Size(ft)		6			6			6			6	
Detector 2 Type		Cl+Ex			Cl+Ex			Cl+Ex			Cl+Ex	
Detector 2 Channel												
Detector 2 Extend (s)		0.0			0.0			0.0			0.0	
Turn Type	Prot	NA		Prot	NA	pm+ov	Prot	NA	pm+ov	Prot	NA	

DocuSign Envelope ID: 5C03745C-4B01-4834-A65D-B77F558A4F46

Lane Group	EBL	EBT	EBR	WBL	WBT	WBR	NBL	NBT	NBR	SBL	SBT	SBR
Protected Phases	7	4		3	8	1	5	2	3	1	6	
Permitted Phases						8			2			
Detector Phase	7	4		3	8	1	5	2	3	1	6	
Switch Phase												
Minimum Initial (s)	7.0	7.0		7.0	7.0	7.0	7.0	12.0	7.0	7.0	12.0	
Minimum Split (s)	14.0	14.0		14.0	14.0	14.0	14.0	19.0	14.0	14.0	19.0	
Total Split (s)	21.0	21.0		18.0	18.0	27.0	20.0	54.0	18.0	27.0	61.0	
Total Split (%)	17.5%	17.5%		15.0%	15.0%	22.5%	16.7%	45.0%	15.0%	22.5%	50.8%	
Maximum Green (s)	14.0	14.0		11.0	11.0	20.0	13.0	47.0	11.0	20.0	54.0	
Yellow Time (s)	5.0	5.0		5.0	5.0	5.0	5.0	5.0	5.0	5.0	5.0	
All-Red Time (s)	2.0	2.0		2.0	2.0	2.0	2.0	2.0	2.0	2.0	2.0	
Lost Time Adjust (s)	-2.0	-2.0		-2.0	-2.0	-2.0	-2.0	-2.0	-2.0	-2.0	-2.0	
Total Lost Time (s)	5.0	5.0		5.0	5.0	5.0	5.0	5.0	5.0	5.0	5.0	
Lead/Lag	Lead	Lag		Lead	Lag	Lead	Lead	Lag	Lead	Lead	Lag	
Lead-Lag Optimize?	Yes	Yes		Yes	Yes	Yes	Yes	Yes	Yes	Yes	Yes	
Vehicle Extension (s)	3.0	3.0		3.0	3.0	3.0	3.0	3.0	3.0	3.0	3.0	
Minimum Gap (s)	3.0	3.0		3.0	3.0	3.0	3.0	3.0	3.0	3.0	3.0	
Time Before Reduce (s)	0.0	0.0		0.0	0.0	0.0	0.0	15.0	0.0	0.0	15.0	
Time To Reduce (s)	0.0	0.0		0.0	0.0	0.0	0.0	30.0	0.0	0.0	30.0	
Recall Mode	None	None		None	None	None	None	Min	None	None	Min	
Act Effct Green (s)	14.7	12.3		10.9	11.4	21.6	11.7	24.2	40.8	13.4	34.0	
Actuated g/C Ratio	0.21	0.17		0.15	0.16	0.30	0.16	0.34	0.57	0.19	0.47	
v/c Ratio	0.18	0.14		0.14	0.18	0.41	0.21	0.59	0.05	0.32	0.41	
Control Delay	33.2	32.2		35.7	35.2	24.9	35.3	24.6	11.0	32.3	20.8	
Queue Delay	0.0	0.0		0.0	0.0	0.0	0.0	0.0	0.0	0.0	0.0	
Total Delay	33.2	32.2		35.7	35.2	24.9	35.3	24.6	11.0	32.3	20.8	
LOS	C	C		D	D	C	D	C	B	C	C	
Approach Delay		32.7			28.2			24.6			23.5	
Approach LOS		C			C			C			C	
Queue Length 50th (ft)	28	17		16	23	64	25	141	10	44	136	
Queue Length 95th (ft)	76	43		49	65	142	70	231	30	91	224	
Internal Link Dist (ft)		168			1120			1509			1520	
Turn Bay Length (ft)				200			175		150	200		
Base Capacity (vph)	479	825		356	375	715	403	2326	941	1210	2650	
Starvation Cap Reductn	0	0		0	0	0	0	0	0	0	0	
Spillback Cap Reductn	0	0		0	0	0	0	0	0	0	0	
Storage Cap Reductn	0	0		0	0	0	0	0	0	0	0	
Reduced v/c Ratio	0.14	0.09		0.10	0.14	0.26	0.14	0.29	0.05	0.17	0.26	

Intersection Summary			
Area Type:	Other		
Cycle Length: 120			
Actuated Cycle Length: 71.7			
Natural Cycle: 65			
Control Type: Actuated-Uncoordinated			
Maximum v/c Ratio: 0.59			
Intersection Signal Delay: 25.2		Intersection LOS: C	
Intersection Capacity Utilization 45.5%		ICU Level of Service A	
Analysis Period (min) 15			

DocuSign Envelope ID: 5C03745C-4B01-4834-A65D-B77F558A4F46

Splits and Phases: 5: NC 191 (Brevard Rd) & Blue Ridge Pkwy Access/NC 191 Connector

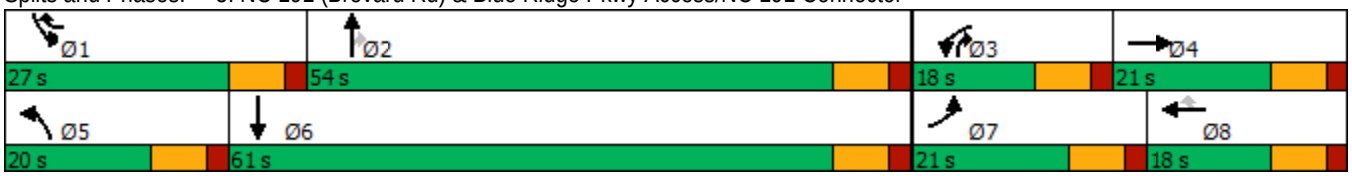

DocuSign Envelope ID: 5C03745C-4B01-4834-A65D-B77F558A4F46

Intersection	
Int Delay, s/veh	0

Movement	EBL	EBT	EBR	WBL	WBT	WBR	NBL	NBT	NBR	SBL	SBT	SBR
Lane Configurations		↑	↱		↰						↑	↱
Traffic Vol, veh/h	0	130	129	1	220	0	0	0	0	0	1	246
Future Vol, veh/h	0	130	129	1	220	0	0	0	0	0	1	246
Conflicting Peds, #/hr	0	0	0	0	0	0	0	0	0	0	0	0
Sign Control	Free	Free	Free	Free	Free	Free	Stop	Stop	Stop	Stop	Stop	Stop
RT Channelized	-	-	Yield	-	-	None	-	-	None	-	-	Yield
Storage Length	-	-	200	-	-	-	-	-	-	-	-	325
Veh in Median Storage, #	-	0	-	-	0	-	-	16974	-	-	0	-
Grade, %	-	0	-	-	0	-	-	0	-	-	0	-
Peak Hour Factor	90	90	90	90	90	90	90	90	90	90	90	90
Heavy Vehicles, %	2	5	12	12	5	2	2	2	2	2	12	5
Mvmt Flow	0	144	143	1	244	0	0	0	0	0	1	273

Major/Minor	Major1			Major2					Minor2		
Conflicting Flow All	-	0	0	144	0	0			-	390	244
Stage 1	-	-	-	-	-	-			-	246	-
Stage 2	-	-	-	-	-	-			-	144	-
Critical Hdwy	-	-	-	4.22	-	-			-	6.62	6.25
Critical Hdwy Stg 1	-	-	-	-	-	-			-	5.62	-
Critical Hdwy Stg 2	-	-	-	-	-	-			-	5.62	-
Follow-up Hdwy	-	-	-	2.308	-	-			-	4.108	3.345
Pot Cap-1 Maneuver	0	-	-	1379	-	0			0	530	787
Stage 1	0	-	-	-	-	0			0	685	-
Stage 2	0	-	-	-	-	0			0	759	-
Platoon blocked, %		-	-		-						
Mov Cap-1 Maneuver	-	-	-	1379	-	-			-	0	787
Mov Cap-2 Maneuver	-	-	-	-	-	-			-	0	-
Stage 1	-	-	-	-	-	-			-	0	-
Stage 2	-	-	-	-	-	-			-	0	-

Approach	EB	WB	SB
HCM Control Delay, s	0	0	
HCM LOS			-

Minor Lane/Major Mvmt	EBT	EBR	WBL	WBT	SBLn1	SBLn2
Capacity (veh/h)	-	-	1379	-	-	787
HCM Lane V/C Ratio	-	-	0.001	-	-	0.347
HCM Control Delay (s)	-	-	7.6	0	-	12
HCM Lane LOS	-	-	A	A	-	B
HCM 95th %tile Q(veh)	-	-	0	-	-	1.6

DocuSign Envelope ID: 5C03745C-4B01-4834-A65D-B77F558A4F46

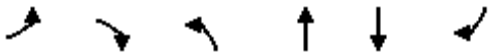

Lane Group	EBL	EBR	NBL	NBT	SBT	SBR
Lane Configurations						
Traffic Volume (vph)	130	0	220	1	0	0
Future Volume (vph)	130	0	220	1	0	0
Ideal Flow (vphpl)	1900	1900	1900	1900	1900	1900
Lane Util. Factor	1.00	1.00	1.00	1.00	1.00	1.00
Frt						
Flt Protected	0.950			0.953		
Satd. Flow (prot)	1612	0	0	1724	0	0
Flt Permitted	0.950			0.953		
Satd. Flow (perm)	1612	0	0	1724	0	0
Right Turn on Red		No				No
Satd. Flow (RTOR)						
Link Speed (mph)	35			45	45	
Link Distance (ft)	546			940	894	
Travel Time (s)	10.6			14.2	13.5	
Peak Hour Factor	0.90	0.90	0.90	0.90	0.90	0.90
Heavy Vehicles (%)	12%	2%	5%	12%	2%	2%
Adj. Flow (vph)	144	0	244	1	0	0
Shared Lane Traffic (%)						
Lane Group Flow (vph)	144	0	0	245	0	0
Enter Blocked Intersection	No	No	No	No	No	No
Lane Alignment	Left	Right	Left	Left	Left	Right
Median Width(ft)	12			0	0	
Link Offset(ft)	0			0	0	
Crosswalk Width(ft)	16			16	16	
Two way Left Turn Lane						
Headway Factor	1.00	1.00	1.00	1.00	1.00	1.00
Turning Speed (mph)	15	9	15			9
Number of Detectors	1		1	2		
Detector Template	Left		Left	Thru		
Leading Detector (ft)	20		20	100		
Trailing Detector (ft)	0		0	0		
Detector 1 Position(ft)	0		0	0		
Detector 1 Size(ft)	20		20	6		
Detector 1 Type	Cl+Ex		Cl+Ex	Cl+Ex		
Detector 1 Channel						
Detector 1 Extend (s)	0.0		0.0	0.0		
Detector 1 Queue (s)	0.0		0.0	0.0		
Detector 1 Delay (s)	0.0		0.0	0.0		
Detector 2 Position(ft)				94		
Detector 2 Size(ft)				6		
Detector 2 Type				Cl+Ex		
Detector 2 Channel						
Detector 2 Extend (s)				0.0		
Turn Type	Prot		Split	NA		
Protected Phases	2		4	4		
Permitted Phases						
Detector Phase	2		4	4		
Switch Phase						

DocuSign Envelope ID: 5C03745C-4B01-4834-A65D-B77F558A4F46

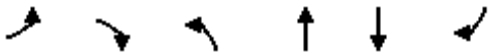

Lane Group	EBL	EBR	NBL	NBT	SBT	SBR
Minimum Initial (s)	10.0		7.0	7.0		
Minimum Split (s)	17.0		14.0	14.0		
Total Split (s)	27.0		33.0	33.0		
Total Split (%)	45.0%		55.0%	55.0%		
Maximum Green (s)	20.0		26.0	26.0		
Yellow Time (s)	5.0		5.0	5.0		
All-Red Time (s)	2.0		2.0	2.0		
Lost Time Adjust (s)	-2.0			-2.0		
Total Lost Time (s)	5.0			5.0		
Lead/Lag						
Lead-Lag Optimize?						
Vehicle Extension (s)	3.0		3.0	3.0		
Recall Mode	Min		None	None		
Act Effct Green (s)	14.1			12.4		
Actuated g/C Ratio	0.39			0.34		
v/c Ratio	0.23			0.42		
Control Delay	10.0			11.1		
Queue Delay	0.0			0.0		
Total Delay	10.0			11.1		
LOS	A			B		
Approach Delay	10.0			11.1		
Approach LOS	A			B		
Queue Length 50th (ft)	17			32		
Queue Length 95th (ft)	52			73		
Internal Link Dist (ft)	466			860	814	
Turn Bay Length (ft)						
Base Capacity (vph)	977			1330		
Starvation Cap Reductn	0			0		
Spillback Cap Reductn	0			0		
Storage Cap Reductn	0			0		
Reduced v/c Ratio	0.15			0.18		

Intersection Summary			
Area Type:	Other		
Cycle Length: 60			
Actuated Cycle Length: 36.6			
Natural Cycle: 40			
Control Type: Actuated-Uncoordinated			
Maximum v/c Ratio: 0.42			
Intersection Signal Delay: 10.7		Intersection LOS: B	
Intersection Capacity Utilization 28.9%		ICU Level of Service A	
Analysis Period (min) 15			

Splits and Phases: 7: HE-0001 NWB Ramp & NC 191 Connector

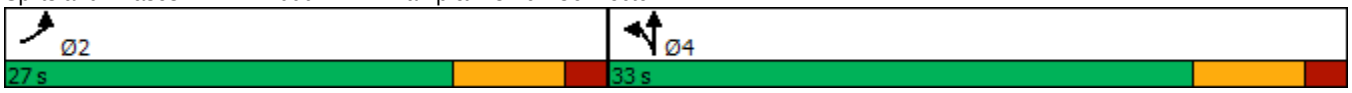

DocuSign Envelope ID: 5C03745C-4B01-4834-A65D-B77F558A4F46

2021 Build - Scenario 1 - PM

DocuSign Envelope ID: 5C03745C-4B01-4834-A65D-B77F558A4F46

Intersection	
Int Delay, s/veh	2.4

Movement	EBL	EBR	NBL	NBT	SBT	SBR
Lane Configurations						
Traffic Vol, veh/h	72	16	13	185	131	43
Future Vol, veh/h	72	16	13	185	131	43
Conflicting Peds, #/hr	0	0	0	0	0	0
Sign Control	Stop	Stop	Free	Free	Free	Free
RT Channelized	-	None	-	None	-	None
Storage Length	75	0	275	-	-	-
Veh in Median Storage, #	0	-	-	0	0	-
Grade, %	0	-	-	0	3	-
Peak Hour Factor	90	90	90	90	90	90
Heavy Vehicles, %	2	2	2	2	2	2
Mvmt Flow	80	18	14	206	146	48

Major/Minor	Minor2		Major1		Major2	
Conflicting Flow All	404	170	194	0	-	0
Stage 1	170	-	-	-	-	-
Stage 2	234	-	-	-	-	-
Critical Hdwy	6.42	6.22	4.12	-	-	-
Critical Hdwy Stg 1	5.42	-	-	-	-	-
Critical Hdwy Stg 2	5.42	-	-	-	-	-
Follow-up Hdwy	3.518	3.318	2.218	-	-	-
Pot Cap-1 Maneuver	603	874	1379	-	-	-
Stage 1	860	-	-	-	-	-
Stage 2	805	-	-	-	-	-
Platoon blocked, %				-	-	-
Mov Cap-1 Maneuver	597	874	1379	-	-	-
Mov Cap-2 Maneuver	597	-	-	-	-	-
Stage 1	851	-	-	-	-	-
Stage 2	805	-	-	-	-	-

Approach	EB	NB	SB
HCM Control Delay, s	11.5	0.5	0
HCM LOS	B		

Minor Lane/Major Mvmt	NBL	NBT	EBLn1	EBLn2	SBT	SBR
Capacity (veh/h)	1379	-	597	874	-	-
HCM Lane V/C Ratio	0.01	-	0.134	0.02	-	-
HCM Control Delay (s)	7.6	-	12	9.2	-	-
HCM Lane LOS	A	-	B	A	-	-
HCM 95th %tile Q(veh)	0	-	0.5	0.1	-	-

DocuSign Envelope ID: 5C03745C-4B01-4834-A65D-B77F558A4F46

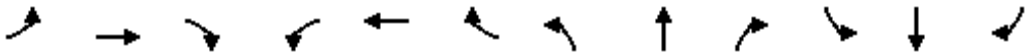

Lane Group	EBL	EBT	EBR	WBL	WBT	WBR	NBL	NBT	NBR	SBL	SBT	SBR
Lane Configurations												
Traffic Volume (vph)	125	68	64	43	49	249	52	839	48	200	602	73
Future Volume (vph)	125	68	64	43	49	249	52	839	48	200	602	73
Ideal Flow (vphpl)	1900	1900	1900	1900	1900	1900	1900	1900	1900	1900	1900	1900
Grade (%)		3%			0%			2%			-7%	
Storage Length (ft)	0		0	200		0	175		150	200		0
Storage Lanes	1		0	1		1	1		1	2		0
Taper Length (ft)	25			25			25			25		
Lane Util. Factor	1.00	0.95	0.95	1.00	1.00	1.00	1.00	0.95	1.00	0.97	0.95	0.95
Frt		0.928				0.850			0.850		0.984	
Flt Protected	0.950			0.950			0.950			0.950		
Satd. Flow (prot)	1743	3235	0	1719	1810	1538	1686	3372	1508	3452	3501	0
Flt Permitted	0.950			0.950			0.950			0.950		
Satd. Flow (perm)	1743	3235	0	1719	1810	1538	1686	3372	1508	3452	3501	0
Right Turn on Red			No			No			No			No
Satd. Flow (RTOR)												
Link Speed (mph)		35			35			45			45	
Link Distance (ft)		248			1200			1589			1600	
Travel Time (s)		4.8			23.4			24.1			24.2	
Peak Hour Factor	0.90	0.90	0.90	0.90	0.90	0.90	0.90	0.90	0.90	0.90	0.90	0.90
Heavy Vehicles (%)	2%	2%	2%	5%	5%	5%	6%	6%	6%	5%	5%	5%
Adj. Flow (vph)	139	76	71	48	54	277	58	932	53	222	669	81
Shared Lane Traffic (%)												
Lane Group Flow (vph)	139	147	0	48	54	277	58	932	53	222	750	0
Enter Blocked Intersection	No	No	No	No	No	No	No	No	No	No	No	No
Lane Alignment	L NA	Left	Right	Left	Left	Left	Left	L NA	Right	Left	Left	Right
Median Width(ft)		12			12			24			24	
Link Offset(ft)		0			0			0			0	
Crosswalk Width(ft)		16			16			16			16	
Two way Left Turn Lane												
Headway Factor	1.02	1.02	1.02	1.00	1.00	1.00	1.01	1.01	1.01	0.96	0.96	0.96
Turning Speed (mph)	15		9	15		9	15		9	15		9
Number of Detectors	1	2		1	2	1	1	2	1	1	2	
Detector Template	Left	Thru		Left	Thru	Right	Left	Thru	Right	Left	Thru	
Leading Detector (ft)	20	100		20	100	20	20	100	20	20	100	
Trailing Detector (ft)	0	0		0	0	0	0	0	0	0	0	
Detector 1 Position(ft)	0	0		0	0	0	0	0	0	0	0	
Detector 1 Size(ft)	20	6		20	6	20	20	6	20	20	6	
Detector 1 Type	Cl+Ex	Cl+Ex		Cl+Ex	Cl+Ex	Cl+Ex	Cl+Ex	Cl+Ex	Cl+Ex	Cl+Ex	Cl+Ex	
Detector 1 Channel												
Detector 1 Extend (s)	0.0	0.0		0.0	0.0	0.0	0.0	0.0	0.0	0.0	0.0	
Detector 1 Queue (s)	0.0	0.0		0.0	0.0	0.0	0.0	0.0	0.0	0.0	0.0	
Detector 1 Delay (s)	0.0	0.0		0.0	0.0	0.0	0.0	0.0	0.0	0.0	0.0	
Detector 2 Position(ft)		94			94			94			94	
Detector 2 Size(ft)		6			6			6			6	
Detector 2 Type		Cl+Ex			Cl+Ex			Cl+Ex			Cl+Ex	
Detector 2 Channel												
Detector 2 Extend (s)		0.0			0.0			0.0			0.0	
Turn Type	Prot	NA		Prot	NA	pm+ov	Prot	NA	pm+ov	Prot	NA	

DocuSign Envelope ID: 5C03745C-4B01-4834-A65D-B77F558A4F46

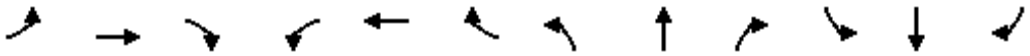

Lane Group	EBL	EBT	EBR	WBL	WBT	WBR	NBL	NBT	NBR	SBL	SBT	SBR
Protected Phases	7	4		3	8	1	5	2	3	1	6	
Permitted Phases						8			2			
Detector Phase	7	4		3	8	1	5	2	3	1	6	
Switch Phase												
Minimum Initial (s)	7.0	7.0		7.0	7.0	7.0	7.0	12.0	7.0	7.0	12.0	
Minimum Split (s)	14.0	14.0		14.0	14.0	14.0	14.0	19.0	14.0	14.0	19.0	
Total Split (s)	23.0	23.0		14.0	14.0	28.0	15.0	55.0	14.0	28.0	68.0	
Total Split (%)	19.2%	19.2%		11.7%	11.7%	23.3%	12.5%	45.8%	11.7%	23.3%	56.7%	
Maximum Green (s)	16.0	16.0		7.0	7.0	21.0	8.0	48.0	7.0	21.0	61.0	
Yellow Time (s)	5.0	5.0		5.0	5.0	5.0	5.0	5.0	5.0	5.0	5.0	
All-Red Time (s)	2.0	2.0		2.0	2.0	2.0	2.0	2.0	2.0	2.0	2.0	
Lost Time Adjust (s)	-2.0	-2.0		-2.0	-2.0	-2.0	-2.0	-2.0	-2.0	-2.0	-2.0	
Total Lost Time (s)	5.0	5.0		5.0	5.0	5.0	5.0	5.0	5.0	5.0	5.0	
Lead/Lag	Lead	Lag		Lead	Lag	Lead	Lead	Lag	Lead	Lead	Lag	
Lead-Lag Optimize?	Yes	Yes		Yes	Yes	Yes	Yes	Yes	Yes	Yes	Yes	
Vehicle Extension (s)	3.0	3.0		3.0	3.0	3.0	3.0	3.0	3.0	3.0	3.0	
Minimum Gap (s)	3.0	3.0		3.0	3.0	3.0	3.0	3.0	3.0	3.0	3.0	
Time Before Reduce (s)	0.0	0.0		0.0	0.0	0.0	0.0	15.0	0.0	0.0	15.0	
Time To Reduce (s)	0.0	0.0		0.0	0.0	0.0	0.0	30.0	0.0	0.0	30.0	
Recall Mode	None	None		None	None	None	None	Min	None	None	Min	
Act Effct Green (s)	14.7	14.7		9.6	9.6	28.0	10.2	35.3	50.3	17.6	47.3	
Actuated g/C Ratio	0.16	0.16		0.10	0.10	0.30	0.11	0.38	0.53	0.19	0.50	
v/c Ratio	0.51	0.29		0.27	0.29	0.61	0.32	0.74	0.07	0.34	0.43	
Control Delay	48.5	41.1		51.8	51.9	36.6	51.8	30.0	13.2	38.7	17.8	
Queue Delay	0.0	0.0		0.0	0.0	0.0	0.0	0.0	0.0	0.0	0.0	
Total Delay	48.5	41.1		51.8	51.9	36.6	51.8	30.0	13.2	38.7	17.8	
LOS	D	D		D	D	D	D	C	B	D	B	
Approach Delay		44.7			40.7			30.4			22.6	
Approach LOS		D			D			C			C	
Queue Length 50th (ft)	80	42		28	32	144	34	256	15	63	168	
Queue Length 95th (ft)	168	86		76	84	273	88	374	40	114	224	
Internal Link Dist (ft)		168			1120			1509			1520	
Turn Bay Length (ft)				200			175		150	200		
Base Capacity (vph)	355	660		175	184	571	190	1911	805	899	2445	
Starvation Cap Reductn	0	0		0	0	0	0	0	0	0	0	
Spillback Cap Reductn	0	0		0	0	0	0	0	0	0	0	
Storage Cap Reductn	0	0		0	0	0	0	0	0	0	0	
Reduced v/c Ratio	0.39	0.22		0.27	0.29	0.49	0.31	0.49	0.07	0.25	0.31	

Intersection Summary			
Area Type:	Other		
Cycle Length: 120			
Actuated Cycle Length: 94.1			
Natural Cycle: 65			
Control Type: Actuated-Uncoordinated			
Maximum v/c Ratio: 0.74			
Intersection Signal Delay: 30.5		Intersection LOS: C	
Intersection Capacity Utilization 58.5%		ICU Level of Service B	
Analysis Period (min) 15			

DocuSign Envelope ID: 5C03745C-4B01-4834-A65D-B77F558A4F46

Splits and Phases: 5: NC 191 (Brevard Rd) & Blue Ridge Pkwy Access/NC 191 Connector

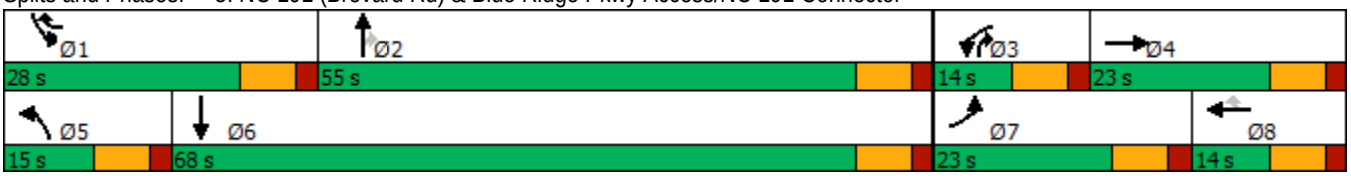

DocuSign Envelope ID: 5C03745C-4B01-4834-A65D-B77F558A4F46

Intersection	
Int Delay, s/veh	0

Movement	EBL	EBT	EBR	WBL	WBT	WBR	NBL	NBT	NBR	SBL	SBT	SBR
Lane Configurations		↑	↱		↰						↑	↱
Traffic Vol, veh/h	0	225	224	1	175	0	0	0	0	0	1	195
Future Vol, veh/h	0	225	224	1	175	0	0	0	0	0	1	195
Conflicting Peds, #/hr	0	0	0	0	0	0	0	0	0	0	0	0
Sign Control	Free	Free	Free	Free	Free	Free	Stop	Stop	Stop	Stop	Stop	Stop
RT Channelized	-	-	Yield	-	-	None	-	-	None	-	-	Yield
Storage Length	-	-	200	-	-	-	-	-	-	-	-	325
Veh in Median Storage, #	-	0	-	-	0	-	-	16974	-	-	0	-
Grade, %	-	0	-	-	0	-	-	0	-	-	0	-
Peak Hour Factor	90	90	90	90	90	90	90	90	90	90	90	90
Heavy Vehicles, %	2	5	12	12	5	2	2	2	2	2	12	5
Mvmt Flow	0	250	249	1	194	0	0	0	0	0	1	217

Major/Minor	Major1			Major2					Minor2		
Conflicting Flow All	-	0	0	250	0	0			-	446	194
Stage 1	-	-	-	-	-	-			-	196	-
Stage 2	-	-	-	-	-	-			-	250	-
Critical Hdwy	-	-	-	4.22	-	-			-	6.62	6.25
Critical Hdwy Stg 1	-	-	-	-	-	-			-	5.62	-
Critical Hdwy Stg 2	-	-	-	-	-	-			-	5.62	-
Follow-up Hdwy	-	-	-	2.308	-	-			-	4.108	3.345
Pot Cap-1 Maneuver	0	-	-	1259	-	0			0	492	840
Stage 1	0	-	-	-	-	0			0	720	-
Stage 2	0	-	-	-	-	0			0	682	-
Platoon blocked, %		-	-		-						
Mov Cap-1 Maneuver	-	-	-	1259	-	-			-	0	840
Mov Cap-2 Maneuver	-	-	-	-	-	-			-	0	-
Stage 1	-	-	-	-	-	-			-	0	-
Stage 2	-	-	-	-	-	-			-	0	-

Approach	EB	WB	SB
HCM Control Delay, s	0	0	
HCM LOS			-

Minor Lane/Major Mvmt	EBT	EBR	WBL	WBT	SBLn1	SBLn2
Capacity (veh/h)	-	-	1259	-	-	840
HCM Lane V/C Ratio	-	-	0.001	-	-	0.258
HCM Control Delay (s)	-	-	7.9	0	-	10.8
HCM Lane LOS	-	-	A	A	-	B
HCM 95th %tile Q(veh)	-	-	0	-	-	1

DocuSign Envelope ID: 5C03745C-4B01-4834-A65D-B77F558A4F46

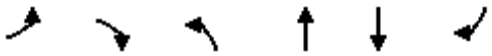

Lane Group	EBL	EBR	NBL	NBT	SBT	SBR
Lane Configurations						
Traffic Volume (vph)	225	0	175	1	0	0
Future Volume (vph)	225	0	175	1	0	0
Ideal Flow (vphpl)	1900	1900	1900	1900	1900	1900
Lane Util. Factor	1.00	1.00	1.00	1.00	1.00	1.00
Frt						
Flt Protected	0.950			0.953		
Satd. Flow (prot)	1612	0	0	1724	0	0
Flt Permitted	0.950			0.953		
Satd. Flow (perm)	1612	0	0	1724	0	0
Right Turn on Red		No				No
Satd. Flow (RTOR)						
Link Speed (mph)	35			45	45	
Link Distance (ft)	546			940	894	
Travel Time (s)	10.6			14.2	13.5	
Peak Hour Factor	0.90	0.90	0.90	0.90	0.90	0.90
Heavy Vehicles (%)	12%	2%	5%	12%	2%	2%
Adj. Flow (vph)	250	0	194	1	0	0
Shared Lane Traffic (%)						
Lane Group Flow (vph)	250	0	0	195	0	0
Enter Blocked Intersection	No	No	No	No	No	No
Lane Alignment	Left	Right	Left	Left	Left	Right
Median Width(ft)	12			0	0	
Link Offset(ft)	0			0	0	
Crosswalk Width(ft)	16			16	16	
Two way Left Turn Lane						
Headway Factor	1.00	1.00	1.00	1.00	1.00	1.00
Turning Speed (mph)	15	9	15			9
Number of Detectors	1		1	2		
Detector Template	Left		Left	Thru		
Leading Detector (ft)	20		20	100		
Trailing Detector (ft)	0		0	0		
Detector 1 Position(ft)	0		0	0		
Detector 1 Size(ft)	20		20	6		
Detector 1 Type	Cl+Ex		Cl+Ex	Cl+Ex		
Detector 1 Channel						
Detector 1 Extend (s)	0.0		0.0	0.0		
Detector 1 Queue (s)	0.0		0.0	0.0		
Detector 1 Delay (s)	0.0		0.0	0.0		
Detector 2 Position(ft)				94		
Detector 2 Size(ft)				6		
Detector 2 Type				Cl+Ex		
Detector 2 Channel						
Detector 2 Extend (s)				0.0		
Turn Type	Prot		Split	NA		
Protected Phases	2		4	4		
Permitted Phases						
Detector Phase	2		4	4		
Switch Phase						

DocuSign Envelope ID: 5C03745C-4B01-4834-A65D-B77F558A4F46

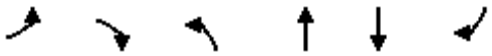

Lane Group	EBL	EBR	NBL	NBT	SBT	SBR
Minimum Initial (s)	10.0		7.0	7.0		
Minimum Split (s)	17.0		14.0	14.0		
Total Split (s)	34.0		26.0	26.0		
Total Split (%)	56.7%		43.3%	43.3%		
Maximum Green (s)	27.0		19.0	19.0		
Yellow Time (s)	5.0		5.0	5.0		
All-Red Time (s)	2.0		2.0	2.0		
Lost Time Adjust (s)	-2.0			-2.0		
Total Lost Time (s)	5.0			5.0		
Lead/Lag						
Lead-Lag Optimize?						
Vehicle Extension (s)	3.0		3.0	3.0		
Recall Mode	Min		None	None		
Act Effct Green (s)	18.3			11.5		
Actuated g/C Ratio	0.51			0.32		
v/c Ratio	0.30			0.35		
Control Delay	9.3			11.6		
Queue Delay	0.0			0.0		
Total Delay	9.3			11.6		
LOS	A			B		
Approach Delay	9.3			11.6		
Approach LOS	A			B		
Queue Length 50th (ft)	31			25		
Queue Length 95th (ft)	82			71		
Internal Link Dist (ft)	466			860	814	
Turn Bay Length (ft)						
Base Capacity (vph)	1327			1028		
Starvation Cap Reductn	0			0		
Spillback Cap Reductn	0			0		
Storage Cap Reductn	0			0		
Reduced v/c Ratio	0.19			0.19		

Intersection Summary			
Area Type:	Other		
Cycle Length: 60			
Actuated Cycle Length: 35.7			
Natural Cycle: 40			
Control Type: Actuated-Uncoordinated			
Maximum v/c Ratio: 0.35			
Intersection Signal Delay: 10.3		Intersection LOS: B	
Intersection Capacity Utilization 30.5%		ICU Level of Service A	
Analysis Period (min) 15			

Splits and Phases: 7: HE-0001 NWB Ramp & NC 191 Connector

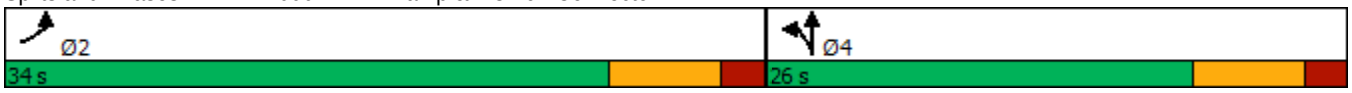

DocuSign Envelope ID: 5C03745C-4B01-4834-A65D-B77F558A4F46

Appendix O – 2021 Build Scenario 2 Synchro Results

Note that the report describes the directions of I-26 as they are signed (eastbound and westbound) while the Synchro files use ordinal direction of the ramps in the description. For clarification, southeast-bound ramps enter or exit from eastbound I-26 while northwest-bound ramps enter or exit from I-26 westbound.

DocuSign Envelope ID: 5C03745C-4B01-4834-A65D-B77F558A4F46

2021 Build - Scenario 2 - AM

DocuSign Envelope ID: 5C03745C-4B01-4834-A65D-B77F558A4F46

Intersection	
Int Delay, s/veh	2.2

Movement	EBL	EBR	NBL	NBT	SBT	SBR
Lane Configurations						
Traffic Vol, veh/h	43	18	20	86	119	63
Future Vol, veh/h	43	18	20	86	119	63
Conflicting Peds, #/hr	0	0	0	0	0	0
Sign Control	Stop	Stop	Free	Free	Free	Free
RT Channelized	-	None	-	None	-	None
Storage Length	75	0	275	-	-	-
Veh in Median Storage, #	0	-	-	0	0	-
Grade, %	0	-	-	0	3	-
Peak Hour Factor	90	90	90	90	90	90
Heavy Vehicles, %	2	2	2	2	2	2
Mvmt Flow	48	20	22	96	132	70

Major/Minor	Minor2		Major1		Major2	
Conflicting Flow All	307	167	202	0	-	0
Stage 1	167	-	-	-	-	-
Stage 2	140	-	-	-	-	-
Critical Hdwy	6.42	6.22	4.12	-	-	-
Critical Hdwy Stg 1	5.42	-	-	-	-	-
Critical Hdwy Stg 2	5.42	-	-	-	-	-
Follow-up Hdwy	3.518	3.318	2.218	-	-	-
Pot Cap-1 Maneuver	685	877	1370	-	-	-
Stage 1	863	-	-	-	-	-
Stage 2	887	-	-	-	-	-
Platoon blocked, %				-	-	-
Mov Cap-1 Maneuver	674	877	1370	-	-	-
Mov Cap-2 Maneuver	674	-	-	-	-	-
Stage 1	849	-	-	-	-	-
Stage 2	887	-	-	-	-	-

Approach	EB	NB	SB
HCM Control Delay, s	10.3	1.4	0
HCM LOS	B		

Minor Lane/Major Mvmt	NBL	NBT	EBLn1	EBLn2	SBT	SBR
Capacity (veh/h)	1370	-	674	877	-	-
HCM Lane V/C Ratio	0.016	-	0.071	0.023	-	-
HCM Control Delay (s)	7.7	-	10.7	9.2	-	-
HCM Lane LOS	A	-	B	A	-	-
HCM 95th %tile Q(veh)	0	-	0.2	0.1	-	-

DocuSign Envelope ID: 5C03745C-4B01-4834-A65D-B77F558A4F46

Lane Group	EBL	EBT	EBR	WBL	WBT	WBR	NBL	NBT	NBR	SBL	SBT	SBR
Lane Configurations												
Traffic Volume (vph)	59	37	33	32	48	170	52	600	40	184	527	82
Future Volume (vph)	59	37	33	32	48	170	52	600	40	184	527	82
Ideal Flow (vphpl)	1900	1900	1900	1900	1900	1900	1900	1900	1900	1900	1900	1900
Grade (%)		3%			0%			2%			-7%	
Storage Length (ft)	0		0	200		0	175		150	200		0
Storage Lanes	1		0	1		1	1		1	2		0
Taper Length (ft)	25			25			25			25		
Lane Util. Factor	1.00	0.95	0.95	1.00	1.00	1.00	1.00	0.95	1.00	0.97	0.95	0.95
Frt		0.929				0.850			0.850		0.980	
Flt Protected	0.950			0.950			0.950			0.950		
Satd. Flow (prot)	1743	3239	0	1719	1810	1538	1686	3372	1508	3452	3487	0
Flt Permitted	0.950			0.950			0.950			0.950		
Satd. Flow (perm)	1743	3239	0	1719	1810	1538	1686	3372	1508	3452	3487	0
Right Turn on Red			No			No			No			No
Satd. Flow (RTOR)												
Link Speed (mph)		35			35			45			45	
Link Distance (ft)		248			1200			1589			1600	
Travel Time (s)		4.8			23.4			24.1			24.2	
Peak Hour Factor	0.90	0.90	0.90	0.90	0.90	0.90	0.90	0.90	0.90	0.90	0.90	0.90
Heavy Vehicles (%)	2%	2%	2%	5%	5%	5%	6%	6%	6%	5%	5%	5%
Adj. Flow (vph)	66	41	37	36	53	189	58	667	44	204	586	91
Shared Lane Traffic (%)												
Lane Group Flow (vph)	66	78	0	36	53	189	58	667	44	204	677	0
Enter Blocked Intersection	No	No	No	No	No	No	No	No	No	No	No	No
Lane Alignment	L NA	Left	Right	Left	Left	Left	Left	L NA	Right	Left	Left	Right
Median Width(ft)		12			12			24			24	
Link Offset(ft)		0			0			0			0	
Crosswalk Width(ft)		16			16			16			16	
Two way Left Turn Lane												
Headway Factor	1.02	1.02	1.02	1.00	1.00	1.00	1.01	1.01	1.01	0.96	0.96	0.96
Turning Speed (mph)	15		9	15		9	15		9	15		9
Number of Detectors	1	2		1	2	1	1	2	1	1	2	
Detector Template	Left	Thru		Left	Thru	Right	Left	Thru	Right	Left	Thru	
Leading Detector (ft)	20	100		20	100	20	20	100	20	20	100	
Trailing Detector (ft)	0	0		0	0	0	0	0	0	0	0	
Detector 1 Position(ft)	0	0		0	0	0	0	0	0	0	0	
Detector 1 Size(ft)	20	6		20	6	20	20	6	20	20	6	
Detector 1 Type	Cl+Ex	Cl+Ex		Cl+Ex	Cl+Ex	Cl+Ex	Cl+Ex	Cl+Ex	Cl+Ex	Cl+Ex	Cl+Ex	
Detector 1 Channel												
Detector 1 Extend (s)	0.0	0.0		0.0	0.0	0.0	0.0	0.0	0.0	0.0	0.0	
Detector 1 Queue (s)	0.0	0.0		0.0	0.0	0.0	0.0	0.0	0.0	0.0	0.0	
Detector 1 Delay (s)	0.0	0.0		0.0	0.0	0.0	0.0	0.0	0.0	0.0	0.0	
Detector 2 Position(ft)		94			94			94			94	
Detector 2 Size(ft)		6			6			6			6	
Detector 2 Type		Cl+Ex			Cl+Ex			Cl+Ex			Cl+Ex	
Detector 2 Channel												
Detector 2 Extend (s)		0.0			0.0			0.0			0.0	
Turn Type	Prot	NA		Prot	NA	pm+ov	Prot	NA	pm+ov	Prot	NA	

DocuSign Envelope ID: 5C03745C-4B01-4834-A65D-B77F558A4F46

Lane Group	EBL	EBT	EBR	WBL	WBT	WBR	NBL	NBT	NBR	SBL	SBT	SBR
Protected Phases	7	4		3	8	1	5	2	3	1	6	
Permitted Phases						8			2			
Detector Phase	7	4		3	8	1	5	2	3	1	6	
Switch Phase												
Minimum Initial (s)	7.0	7.0		7.0	7.0	7.0	7.0	12.0	7.0	7.0	12.0	
Minimum Split (s)	14.0	14.0		14.0	14.0	14.0	14.0	19.0	14.0	14.0	19.0	
Total Split (s)	21.0	21.0		18.0	18.0	27.0	20.0	54.0	18.0	27.0	61.0	
Total Split (%)	17.5%	17.5%		15.0%	15.0%	22.5%	16.7%	45.0%	15.0%	22.5%	50.8%	
Maximum Green (s)	14.0	14.0		11.0	11.0	20.0	13.0	47.0	11.0	20.0	54.0	
Yellow Time (s)	5.0	5.0		5.0	5.0	5.0	5.0	5.0	5.0	5.0	5.0	
All-Red Time (s)	2.0	2.0		2.0	2.0	2.0	2.0	2.0	2.0	2.0	2.0	
Lost Time Adjust (s)	-2.0	-2.0		-2.0	-2.0	-2.0	-2.0	-2.0	-2.0	-2.0	-2.0	
Total Lost Time (s)	5.0	5.0		5.0	5.0	5.0	5.0	5.0	5.0	5.0	5.0	
Lead/Lag	Lead	Lag		Lead	Lag	Lead	Lead	Lag	Lead	Lead	Lag	
Lead-Lag Optimize?	Yes	Yes		Yes	Yes	Yes	Yes	Yes	Yes	Yes	Yes	
Vehicle Extension (s)	3.0	3.0		3.0	3.0	3.0	3.0	3.0	3.0	3.0	3.0	
Minimum Gap (s)	3.0	3.0		3.0	3.0	3.0	3.0	3.0	3.0	3.0	3.0	
Time Before Reduce (s)	0.0	0.0		0.0	0.0	0.0	0.0	15.0	0.0	0.0	15.0	
Time To Reduce (s)	0.0	0.0		0.0	0.0	0.0	0.0	30.0	0.0	0.0	30.0	
Recall Mode	None	None		None	None	None	None	Min	None	None	Min	
Act Effct Green (s)	14.7	12.3		10.9	11.4	21.6	11.7	24.2	40.8	13.4	34.0	
Actuated g/C Ratio	0.21	0.17		0.15	0.16	0.30	0.16	0.34	0.57	0.19	0.47	
v/c Ratio	0.18	0.14		0.14	0.18	0.41	0.21	0.59	0.05	0.32	0.41	
Control Delay	33.2	32.2		35.7	35.2	24.9	35.3	24.6	11.0	32.3	20.8	
Queue Delay	0.0	0.0		0.0	0.0	0.0	0.0	0.0	0.0	0.0	0.0	
Total Delay	33.2	32.2		35.7	35.2	24.9	35.3	24.6	11.0	32.3	20.8	
LOS	C	C		D	D	C	D	C	B	C	C	
Approach Delay		32.7			28.2			24.6			23.5	
Approach LOS		C			C			C			C	
Queue Length 50th (ft)	28	17		16	23	64	25	141	10	44	136	
Queue Length 95th (ft)	76	43		49	65	142	70	231	30	91	224	
Internal Link Dist (ft)		168			1120			1509			1520	
Turn Bay Length (ft)				200			175		150	200		
Base Capacity (vph)	479	825		356	375	715	403	2326	941	1210	2650	
Starvation Cap Reductn	0	0		0	0	0	0	0	0	0	0	
Spillback Cap Reductn	0	0		0	0	0	0	0	0	0	0	
Storage Cap Reductn	0	0		0	0	0	0	0	0	0	0	
Reduced v/c Ratio	0.14	0.09		0.10	0.14	0.26	0.14	0.29	0.05	0.17	0.26	

Intersection Summary			
Area Type:	Other		
Cycle Length: 120			
Actuated Cycle Length: 71.7			
Natural Cycle: 65			
Control Type: Actuated-Uncoordinated			
Maximum v/c Ratio: 0.59			
Intersection Signal Delay: 25.2		Intersection LOS: C	
Intersection Capacity Utilization 45.5%		ICU Level of Service A	
Analysis Period (min) 15			

DocuSign Envelope ID: 5C03745C-4B01-4834-A65D-B77F558A4F46

Splits and Phases: 5: NC 191 (Brevard Rd) & Blue Ridge Pkwy Access/NC 191 Connector

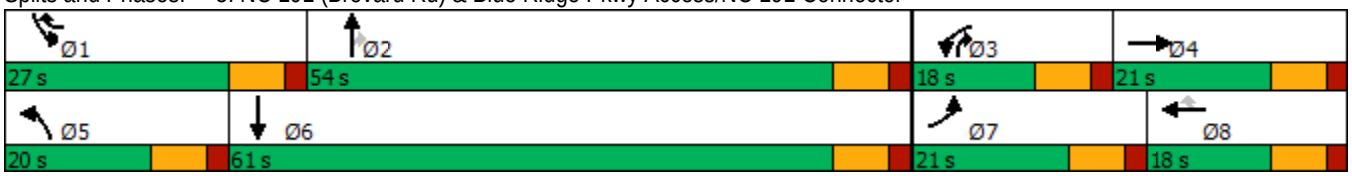

DocuSign Envelope ID: 5C03745C-4B01-4834-A65D-B77F558A4F46

Intersection	
Int Delay, s/veh	0

Movement	EBL	EBT	EBR	WBL	WBT	WBR	NBL	NBT	NBR	SBL	SBT	SBR
Lane Configurations		↑	↱		↰						↑	↱
Traffic Vol, veh/h	0	130	129	1	220	0	0	0	0	0	1	246
Future Vol, veh/h	0	130	129	1	220	0	0	0	0	0	1	246
Conflicting Peds, #/hr	0	0	0	0	0	0	0	0	0	0	0	0
Sign Control	Free	Free	Free	Free	Free	Free	Stop	Stop	Stop	Stop	Stop	Stop
RT Channelized	-	-	Yield	-	-	None	-	-	None	-	-	Yield
Storage Length	-	-	200	-	-	-	-	-	-	-	-	325
Veh in Median Storage, #	-	0	-	-	0	-	-	16974	-	-	0	-
Grade, %	-	0	-	-	0	-	-	0	-	-	0	-
Peak Hour Factor	90	90	90	90	90	90	90	90	90	90	90	90
Heavy Vehicles, %	2	5	12	12	5	2	2	2	2	2	12	5
Mvmt Flow	0	144	143	1	244	0	0	0	0	0	1	273

Major/Minor	Major1			Major2					Minor2		
Conflicting Flow All	-	0	0	144	0	0			-	390	244
Stage 1	-	-	-	-	-	-			-	246	-
Stage 2	-	-	-	-	-	-			-	144	-
Critical Hdwy	-	-	-	4.22	-	-			-	6.62	6.25
Critical Hdwy Stg 1	-	-	-	-	-	-			-	5.62	-
Critical Hdwy Stg 2	-	-	-	-	-	-			-	5.62	-
Follow-up Hdwy	-	-	-	2.308	-	-			-	4.108	3.345
Pot Cap-1 Maneuver	0	-	-	1379	-	0			0	530	787
Stage 1	0	-	-	-	-	0			0	685	-
Stage 2	0	-	-	-	-	0			0	759	-
Platoon blocked, %		-	-		-						
Mov Cap-1 Maneuver	-	-	-	1379	-	-			-	0	787
Mov Cap-2 Maneuver	-	-	-	-	-	-			-	0	-
Stage 1	-	-	-	-	-	-			-	0	-
Stage 2	-	-	-	-	-	-			-	0	-

Approach	EB	WB	SB
HCM Control Delay, s	0	0	
HCM LOS			-

Minor Lane/Major Mvmt	EBT	EBR	WBL	WBT	SBLn1	SBLn2
Capacity (veh/h)	-	-	1379	-	-	787
HCM Lane V/C Ratio	-	-	0.001	-	-	0.347
HCM Control Delay (s)	-	-	7.6	0	-	12
HCM Lane LOS	-	-	A	A	-	B
HCM 95th %tile Q(veh)	-	-	0	-	-	1.6

DocuSign Envelope ID: 5C03745C-4B01-4834-A65D-B77F558A4F46

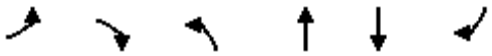

Lane Group	EBL	EBR	NBL	NBT	SBT	SBR
Lane Configurations						
Traffic Volume (vph)	130	0	220	1	0	0
Future Volume (vph)	130	0	220	1	0	0
Ideal Flow (vphpl)	1900	1900	1900	1900	1900	1900
Lane Util. Factor	1.00	1.00	1.00	1.00	1.00	1.00
Frt						
Flt Protected	0.950			0.953		
Satd. Flow (prot)	1612	0	0	1724	0	0
Flt Permitted	0.950			0.953		
Satd. Flow (perm)	1612	0	0	1724	0	0
Right Turn on Red		No				No
Satd. Flow (RTOR)						
Link Speed (mph)	35			45	45	
Link Distance (ft)	276			994	576	
Travel Time (s)	5.4			15.1	8.7	
Peak Hour Factor	0.90	0.90	0.90	0.90	0.90	0.90
Heavy Vehicles (%)	12%	2%	5%	12%	2%	2%
Adj. Flow (vph)	144	0	244	1	0	0
Shared Lane Traffic (%)						
Lane Group Flow (vph)	144	0	0	245	0	0
Enter Blocked Intersection	No	No	No	No	No	No
Lane Alignment	Left	Right	Left	Left	Left	Right
Median Width(ft)	12			0	0	
Link Offset(ft)	0			0	0	
Crosswalk Width(ft)	16			16	16	
Two way Left Turn Lane						
Headway Factor	1.00	1.00	1.00	1.00	1.00	1.00
Turning Speed (mph)	15	9	15			9
Number of Detectors	1		1	2		
Detector Template	Left		Left	Thru		
Leading Detector (ft)	20		20	100		
Trailing Detector (ft)	0		0	0		
Detector 1 Position(ft)	0		0	0		
Detector 1 Size(ft)	20		20	6		
Detector 1 Type	Cl+Ex		Cl+Ex	Cl+Ex		
Detector 1 Channel						
Detector 1 Extend (s)	0.0		0.0	0.0		
Detector 1 Queue (s)	0.0		0.0	0.0		
Detector 1 Delay (s)	0.0		0.0	0.0		
Detector 2 Position(ft)				94		
Detector 2 Size(ft)				6		
Detector 2 Type				Cl+Ex		
Detector 2 Channel						
Detector 2 Extend (s)				0.0		
Turn Type	Prot		Split	NA		
Protected Phases	2		4	4		
Permitted Phases						
Detector Phase	2		4	4		
Switch Phase						

DocuSign Envelope ID: 5C03745C-4B01-4834-A65D-B77F558A4F46

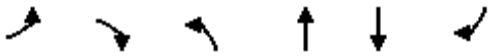

Lane Group	EBL	EBR	NBL	NBT	SBT	SBR
Minimum Initial (s)	10.0		7.0	7.0		
Minimum Split (s)	17.0		14.0	14.0		
Total Split (s)	27.0		33.0	33.0		
Total Split (%)	45.0%		55.0%	55.0%		
Maximum Green (s)	20.0		26.0	26.0		
Yellow Time (s)	5.0		5.0	5.0		
All-Red Time (s)	2.0		2.0	2.0		
Lost Time Adjust (s)	-2.0			-2.0		
Total Lost Time (s)	5.0			5.0		
Lead/Lag						
Lead-Lag Optimize?						
Vehicle Extension (s)	3.0		3.0	3.0		
Recall Mode	Min		None	None		
Act Effct Green (s)	14.1			12.4		
Actuated g/C Ratio	0.39			0.34		
v/c Ratio	0.23			0.42		
Control Delay	10.0			11.1		
Queue Delay	0.0			0.0		
Total Delay	10.0			11.1		
LOS	A			B		
Approach Delay	10.0			11.1		
Approach LOS	A			B		
Queue Length 50th (ft)	17			32		
Queue Length 95th (ft)	52			73		
Internal Link Dist (ft)	196			914	496	
Turn Bay Length (ft)						
Base Capacity (vph)	977			1330		
Starvation Cap Reductn	0			0		
Spillback Cap Reductn	0			0		
Storage Cap Reductn	0			0		
Reduced v/c Ratio	0.15			0.18		

Intersection Summary			
Area Type:	Other		
Cycle Length: 60			
Actuated Cycle Length: 36.6			
Natural Cycle: 40			
Control Type: Actuated-Uncoordinated			
Maximum v/c Ratio: 0.42			
Intersection Signal Delay: 10.7		Intersection LOS: B	
Intersection Capacity Utilization 28.9%		ICU Level of Service A	
Analysis Period (min) 15			

Splits and Phases: 7: HE-0001 NWB Ramp & NC 191 Connector

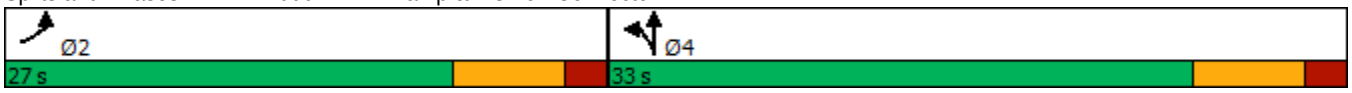

DocuSign Envelope ID: 5C03745C-4B01-4834-A65D-B77F558A4F46

2021 Build - Scenario 2 - PM

DocuSign Envelope ID: 5C03745C-4B01-4834-A65D-B77F558A4F46

Intersection	
Int Delay, s/veh	2.4

Movement	EBL	EBR	NBL	NBT	SBT	SBR
Lane Configurations						
Traffic Vol, veh/h	72	16	13	185	131	43
Future Vol, veh/h	72	16	13	185	131	43
Conflicting Peds, #/hr	0	0	0	0	0	0
Sign Control	Stop	Stop	Free	Free	Free	Free
RT Channelized	-	None	-	None	-	None
Storage Length	75	0	275	-	-	-
Veh in Median Storage, #	0	-	-	0	0	-
Grade, %	0	-	-	0	3	-
Peak Hour Factor	90	90	90	90	90	90
Heavy Vehicles, %	2	2	2	2	2	2
Mvmt Flow	80	18	14	206	146	48

Major/Minor	Minor2		Major1		Major2	
Conflicting Flow All	404	170	194	0	-	0
Stage 1	170	-	-	-	-	-
Stage 2	234	-	-	-	-	-
Critical Hdwy	6.42	6.22	4.12	-	-	-
Critical Hdwy Stg 1	5.42	-	-	-	-	-
Critical Hdwy Stg 2	5.42	-	-	-	-	-
Follow-up Hdwy	3.518	3.318	2.218	-	-	-
Pot Cap-1 Maneuver	603	874	1379	-	-	-
Stage 1	860	-	-	-	-	-
Stage 2	805	-	-	-	-	-
Platoon blocked, %				-	-	-
Mov Cap-1 Maneuver	597	874	1379	-	-	-
Mov Cap-2 Maneuver	597	-	-	-	-	-
Stage 1	851	-	-	-	-	-
Stage 2	805	-	-	-	-	-

Approach	EB	NB	SB
HCM Control Delay, s	11.5	0.5	0
HCM LOS	B		

Minor Lane/Major Mvmt	NBL	NBT	EBLn1	EBLn2	SBT	SBR
Capacity (veh/h)	1379	-	597	874	-	-
HCM Lane V/C Ratio	0.01	-	0.134	0.02	-	-
HCM Control Delay (s)	7.6	-	12	9.2	-	-
HCM Lane LOS	A	-	B	A	-	-
HCM 95th %tile Q(veh)	0	-	0.5	0.1	-	-

DocuSign Envelope ID: 5C03745C-4B01-4834-A65D-B77F558A4F46

Lane Group	EBL	EBT	EBR	WBL	WBT	WBR	NBL	NBT	NBR	SBL	SBT	SBR
Lane Configurations												
Traffic Volume (vph)	125	68	64	43	49	249	52	839	48	200	602	73
Future Volume (vph)	125	68	64	43	49	249	52	839	48	200	602	73
Ideal Flow (vphpl)	1900	1900	1900	1900	1900	1900	1900	1900	1900	1900	1900	1900
Grade (%)		3%			0%			2%			-7%	
Storage Length (ft)	0		0	200		0	175		150	200		0
Storage Lanes	1		0	1		1	1		1	2		0
Taper Length (ft)	25			25			25			25		
Lane Util. Factor	1.00	0.95	0.95	1.00	1.00	1.00	1.00	0.95	1.00	0.97	0.95	0.95
Frt		0.928				0.850			0.850		0.984	
Flt Protected	0.950			0.950			0.950			0.950		
Satd. Flow (prot)	1743	3235	0	1719	1810	1538	1686	3372	1508	3452	3501	0
Flt Permitted	0.950			0.950			0.950			0.950		
Satd. Flow (perm)	1743	3235	0	1719	1810	1538	1686	3372	1508	3452	3501	0
Right Turn on Red			No			No			No			No
Satd. Flow (RTOR)												
Link Speed (mph)		35			35			45			45	
Link Distance (ft)		248			1200			1589			1600	
Travel Time (s)		4.8			23.4			24.1			24.2	
Peak Hour Factor	0.90	0.90	0.90	0.90	0.90	0.90	0.90	0.90	0.90	0.90	0.90	0.90
Heavy Vehicles (%)	2%	2%	2%	5%	5%	5%	6%	6%	6%	5%	5%	5%
Adj. Flow (vph)	139	76	71	48	54	277	58	932	53	222	669	81
Shared Lane Traffic (%)												
Lane Group Flow (vph)	139	147	0	48	54	277	58	932	53	222	750	0
Enter Blocked Intersection	No	No	No	No	No	No	No	No	No	No	No	No
Lane Alignment	L NA	Left	Right	Left	Left	Left	Left	L NA	Right	Left	Left	Right
Median Width(ft)		12			12			24			24	
Link Offset(ft)		0			0			0			0	
Crosswalk Width(ft)		16			16			16			16	
Two way Left Turn Lane												
Headway Factor	1.02	1.02	1.02	1.00	1.00	1.00	1.01	1.01	1.01	0.96	0.96	0.96
Turning Speed (mph)	15		9	15		9	15		9	15		9
Number of Detectors	1	2		1	2	1	1	2	1	1	2	
Detector Template	Left	Thru		Left	Thru	Right	Left	Thru	Right	Left	Thru	
Leading Detector (ft)	20	100		20	100	20	20	100	20	20	100	
Trailing Detector (ft)	0	0		0	0	0	0	0	0	0	0	
Detector 1 Position(ft)	0	0		0	0	0	0	0	0	0	0	
Detector 1 Size(ft)	20	6		20	6	20	20	6	20	20	6	
Detector 1 Type	Cl+Ex	Cl+Ex		Cl+Ex	Cl+Ex	Cl+Ex	Cl+Ex	Cl+Ex	Cl+Ex	Cl+Ex	Cl+Ex	
Detector 1 Channel												
Detector 1 Extend (s)	0.0	0.0		0.0	0.0	0.0	0.0	0.0	0.0	0.0	0.0	
Detector 1 Queue (s)	0.0	0.0		0.0	0.0	0.0	0.0	0.0	0.0	0.0	0.0	
Detector 1 Delay (s)	0.0	0.0		0.0	0.0	0.0	0.0	0.0	0.0	0.0	0.0	
Detector 2 Position(ft)		94			94			94			94	
Detector 2 Size(ft)		6			6			6			6	
Detector 2 Type		Cl+Ex			Cl+Ex			Cl+Ex			Cl+Ex	
Detector 2 Channel												
Detector 2 Extend (s)		0.0			0.0			0.0			0.0	
Turn Type	Prot	NA		Prot	NA	pm+ov	Prot	NA	pm+ov	Prot	NA	

DocuSign Envelope ID: 5C03745C-4B01-4834-A65D-B77F558A4F46

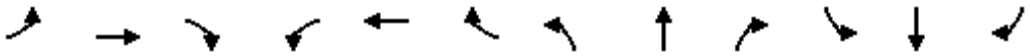

Lane Group	EBL	EBT	EBR	WBL	WBT	WBR	NBL	NBT	NBR	SBL	SBT	SBR
Protected Phases	7	4		3	8	1	5	2	3	1	6	
Permitted Phases						8			2			
Detector Phase	7	4		3	8	1	5	2	3	1	6	
Switch Phase												
Minimum Initial (s)	7.0	7.0		7.0	7.0	7.0	7.0	12.0	7.0	7.0	12.0	
Minimum Split (s)	14.0	14.0		14.0	14.0	14.0	14.0	19.0	14.0	14.0	19.0	
Total Split (s)	23.0	23.0		14.0	14.0	28.0	15.0	55.0	14.0	28.0	68.0	
Total Split (%)	19.2%	19.2%		11.7%	11.7%	23.3%	12.5%	45.8%	11.7%	23.3%	56.7%	
Maximum Green (s)	16.0	16.0		7.0	7.0	21.0	8.0	48.0	7.0	21.0	61.0	
Yellow Time (s)	5.0	5.0		5.0	5.0	5.0	5.0	5.0	5.0	5.0	5.0	
All-Red Time (s)	2.0	2.0		2.0	2.0	2.0	2.0	2.0	2.0	2.0	2.0	
Lost Time Adjust (s)	-2.0	-2.0		-2.0	-2.0	-2.0	-2.0	-2.0	-2.0	-2.0	-2.0	
Total Lost Time (s)	5.0	5.0		5.0	5.0	5.0	5.0	5.0	5.0	5.0	5.0	
Lead/Lag	Lead	Lag		Lead	Lag	Lead	Lead	Lag	Lead	Lead	Lag	
Lead-Lag Optimize?	Yes	Yes		Yes	Yes	Yes	Yes	Yes	Yes	Yes	Yes	
Vehicle Extension (s)	3.0	3.0		3.0	3.0	3.0	3.0	3.0	3.0	3.0	3.0	
Minimum Gap (s)	3.0	3.0		3.0	3.0	3.0	3.0	3.0	3.0	3.0	3.0	
Time Before Reduce (s)	0.0	0.0		0.0	0.0	0.0	0.0	15.0	0.0	0.0	15.0	
Time To Reduce (s)	0.0	0.0		0.0	0.0	0.0	0.0	30.0	0.0	0.0	30.0	
Recall Mode	None	None		None	None	None	None	Min	None	None	Min	
Act Effct Green (s)	14.7	14.7		9.6	9.6	28.0	10.2	35.3	50.3	17.6	47.3	
Actuated g/C Ratio	0.16	0.16		0.10	0.10	0.30	0.11	0.38	0.53	0.19	0.50	
v/c Ratio	0.51	0.29		0.27	0.29	0.61	0.32	0.74	0.07	0.34	0.43	
Control Delay	48.5	41.1		51.8	51.9	36.6	51.8	30.0	13.2	38.7	17.8	
Queue Delay	0.0	0.0		0.0	0.0	0.0	0.0	0.0	0.0	0.0	0.0	
Total Delay	48.5	41.1		51.8	51.9	36.6	51.8	30.0	13.2	38.7	17.8	
LOS	D	D		D	D	D	D	C	B	D	B	
Approach Delay		44.7			40.7			30.4			22.6	
Approach LOS		D			D			C			C	
Queue Length 50th (ft)	80	42		28	32	144	34	256	15	63	168	
Queue Length 95th (ft)	168	86		76	84	273	88	374	40	114	224	
Internal Link Dist (ft)		168			1120			1509			1520	
Turn Bay Length (ft)				200			175		150	200		
Base Capacity (vph)	355	660		175	184	571	190	1911	805	899	2445	
Starvation Cap Reductn	0	0		0	0	0	0	0	0	0	0	
Spillback Cap Reductn	0	0		0	0	0	0	0	0	0	0	
Storage Cap Reductn	0	0		0	0	0	0	0	0	0	0	
Reduced v/c Ratio	0.39	0.22		0.27	0.29	0.49	0.31	0.49	0.07	0.25	0.31	

Intersection Summary			
Area Type:	Other		
Cycle Length: 120			
Actuated Cycle Length: 94.1			
Natural Cycle: 65			
Control Type: Actuated-Uncoordinated			
Maximum v/c Ratio: 0.74			
Intersection Signal Delay: 30.5		Intersection LOS: C	
Intersection Capacity Utilization 58.5%		ICU Level of Service B	
Analysis Period (min) 15			

DocuSign Envelope ID: 5C03745C-4B01-4834-A65D-B77F558A4F46

Splits and Phases: 5: NC 191 (Brevard Rd) & Blue Ridge Pkwy Access/NC 191 Connector

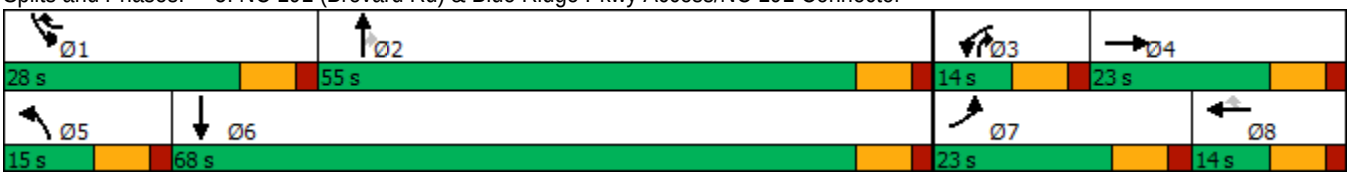

DocuSign Envelope ID: 5C03745C-4B01-4834-A65D-B77F558A4F46

Intersection	
Int Delay, s/veh	0

Movement	EBL	EBT	EBR	WBL	WBT	WBR	NBL	NBT	NBR	SBL	SBT	SBR
Lane Configurations		↑	↱		↰						↑	↱
Traffic Vol, veh/h	0	225	224	1	175	0	0	0	0	0	1	195
Future Vol, veh/h	0	225	224	1	175	0	0	0	0	0	1	195
Conflicting Peds, #/hr	0	0	0	0	0	0	0	0	0	0	0	0
Sign Control	Free	Free	Free	Free	Free	Free	Stop	Stop	Stop	Stop	Stop	Stop
RT Channelized	-	-	Yield	-	-	None	-	-	None	-	-	Yield
Storage Length	-	-	200	-	-	-	-	-	-	-	-	325
Veh in Median Storage, #	-	0	-	-	0	-	-	16974	-	-	0	-
Grade, %	-	0	-	-	0	-	-	0	-	-	0	-
Peak Hour Factor	90	90	90	90	90	90	90	90	90	90	90	90
Heavy Vehicles, %	2	5	12	12	5	2	2	2	2	2	12	5
Mvmt Flow	0	250	249	1	194	0	0	0	0	0	1	217

Major/Minor	Major1			Major2					Minor2			
Conflicting Flow All	-	0	0	250	0	0			-	446	194	
Stage 1	-	-	-	-	-	-			-	196	-	
Stage 2	-	-	-	-	-	-			-	250	-	
Critical Hdwy	-	-	-	4.22	-	-			-	6.62	6.25	
Critical Hdwy Stg 1	-	-	-	-	-	-			-	5.62	-	
Critical Hdwy Stg 2	-	-	-	-	-	-			-	5.62	-	
Follow-up Hdwy	-	-	-	2.308	-	-			-	4.108	3.345	
Pot Cap-1 Maneuver	0	-	-	1259	-	0			0	492	840	
Stage 1	0	-	-	-	-	0			0	720	-	
Stage 2	0	-	-	-	-	0			0	682	-	
Platoon blocked, %		-	-		-							
Mov Cap-1 Maneuver	-	-	-	1259	-	-			-	0	840	
Mov Cap-2 Maneuver	-	-	-	-	-	-			-	0	-	
Stage 1	-	-	-	-	-	-			-	0	-	
Stage 2	-	-	-	-	-	-			-	0	-	

Approach	EB	WB	SB
HCM Control Delay, s	0	0	
HCM LOS			-

Minor Lane/Major Mvmt	EBT	EBR	WBL	WBT	SBLn1	SBLn2
Capacity (veh/h)	-	-	1259	-	-	840
HCM Lane V/C Ratio	-	-	0.001	-	-	0.258
HCM Control Delay (s)	-	-	7.9	0	-	10.8
HCM Lane LOS	-	-	A	A	-	B
HCM 95th %tile Q(veh)	-	-	0	-	-	1

DocuSign Envelope ID: 5C03745C-4B01-4834-A65D-B77F558A4F46

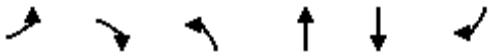

Lane Group	EBL	EBR	NBL	NBT	SBT	SBR
Lane Configurations						
Traffic Volume (vph)	225	0	175	1	0	0
Future Volume (vph)	225	0	175	1	0	0
Ideal Flow (vphpl)	1900	1900	1900	1900	1900	1900
Lane Util. Factor	1.00	1.00	1.00	1.00	1.00	1.00
Frt						
Flt Protected	0.950			0.953		
Satd. Flow (prot)	1612	0	0	1724	0	0
Flt Permitted	0.950			0.953		
Satd. Flow (perm)	1612	0	0	1724	0	0
Right Turn on Red		No				No
Satd. Flow (RTOR)						
Link Speed (mph)	35			45	45	
Link Distance (ft)	276			994	576	
Travel Time (s)	5.4			15.1	8.7	
Peak Hour Factor	0.90	0.90	0.90	0.90	0.90	0.90
Heavy Vehicles (%)	12%	2%	5%	12%	2%	2%
Adj. Flow (vph)	250	0	194	1	0	0
Shared Lane Traffic (%)						
Lane Group Flow (vph)	250	0	0	195	0	0
Enter Blocked Intersection	No	No	No	No	No	No
Lane Alignment	Left	Right	Left	Left	Left	Right
Median Width(ft)	12			0	0	
Link Offset(ft)	0			0	0	
Crosswalk Width(ft)	16			16	16	
Two way Left Turn Lane						
Headway Factor	1.00	1.00	1.00	1.00	1.00	1.00
Turning Speed (mph)	15	9	15			9
Number of Detectors	1		1	2		
Detector Template	Left		Left	Thru		
Leading Detector (ft)	20		20	100		
Trailing Detector (ft)	0		0	0		
Detector 1 Position(ft)	0		0	0		
Detector 1 Size(ft)	20		20	6		
Detector 1 Type	Cl+Ex		Cl+Ex	Cl+Ex		
Detector 1 Channel						
Detector 1 Extend (s)	0.0		0.0	0.0		
Detector 1 Queue (s)	0.0		0.0	0.0		
Detector 1 Delay (s)	0.0		0.0	0.0		
Detector 2 Position(ft)				94		
Detector 2 Size(ft)				6		
Detector 2 Type				Cl+Ex		
Detector 2 Channel						
Detector 2 Extend (s)				0.0		
Turn Type	Prot		Split	NA		
Protected Phases	2		4	4		
Permitted Phases						
Detector Phase	2		4	4		
Switch Phase						

DocuSign Envelope ID: 5C03745C-4B01-4834-A65D-B77F558A4F46

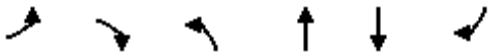

Lane Group	EBL	EBR	NBL	NBT	SBT	SBR
Minimum Initial (s)	10.0		7.0	7.0		
Minimum Split (s)	17.0		14.0	14.0		
Total Split (s)	34.0		26.0	26.0		
Total Split (%)	56.7%		43.3%	43.3%		
Maximum Green (s)	27.0		19.0	19.0		
Yellow Time (s)	5.0		5.0	5.0		
All-Red Time (s)	2.0		2.0	2.0		
Lost Time Adjust (s)	-2.0			-2.0		
Total Lost Time (s)	5.0			5.0		
Lead/Lag						
Lead-Lag Optimize?						
Vehicle Extension (s)	3.0		3.0	3.0		
Recall Mode	Min		None	None		
Act Effct Green (s)	18.3			11.5		
Actuated g/C Ratio	0.51			0.32		
v/c Ratio	0.30			0.35		
Control Delay	9.3			11.6		
Queue Delay	0.0			0.0		
Total Delay	9.3			11.6		
LOS	A			B		
Approach Delay	9.3			11.6		
Approach LOS	A			B		
Queue Length 50th (ft)	31			25		
Queue Length 95th (ft)	82			71		
Internal Link Dist (ft)	196			914	496	
Turn Bay Length (ft)						
Base Capacity (vph)	1327			1028		
Starvation Cap Reductn	0			0		
Spillback Cap Reductn	0			0		
Storage Cap Reductn	0			0		
Reduced v/c Ratio	0.19			0.19		

Intersection Summary			
Area Type:	Other		
Cycle Length: 60			
Actuated Cycle Length: 35.7			
Natural Cycle: 40			
Control Type: Actuated-Uncoordinated			
Maximum v/c Ratio: 0.35			
Intersection Signal Delay: 10.3		Intersection LOS: B	
Intersection Capacity Utilization 30.5%		ICU Level of Service A	
Analysis Period (min) 15			

Splits and Phases: 7: HE-0001 NWB Ramp & NC 191 Connector

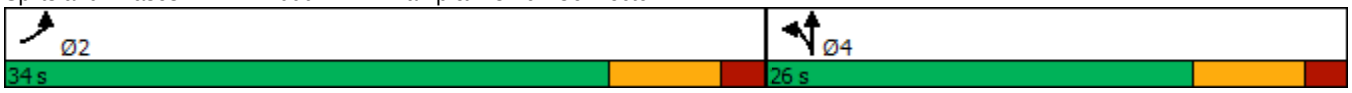

DocuSign Envelope ID: 5C03745C-4B01-4834-A65D-B77F558A4F46

Appendix P – 2045 Build Scenario 1 Synchro Results

Note that the report describes the directions of I-26 as they are signed (eastbound and westbound) while the Synchro files use ordinal direction of the ramps in the description. For clarification, southeast-bound ramps enter or exit from eastbound I-26 while northwest-bound ramps enter or exit from I-26 westbound.

DocuSign Envelope ID: 5C03745C-4B01-4834-A65D-B77F558A4F46

2045 Build - Scenario 1 - AM

DocuSign Envelope ID: 5C03745C-4B01-4834-A65D-B77F558A4F46

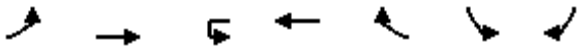

Lane Group	EBL	EBT	WBU	WBT	WBR	SBL	SBR
Lane Configurations							
Traffic Volume (vph)	63	1022	0	1128	90	114	89
Future Volume (vph)	63	1022	0	1128	90	114	89
Ideal Flow (vphpl)	1900	1900	1900	1900	1900	1900	1900
Storage Length (ft)	150		150		175	0	175
Storage Lanes	1		1		1	1	1
Taper Length (ft)	25		25			25	
Lane Util. Factor	1.00	0.95	1.00	0.95	1.00	1.00	1.00
Frt					0.850		0.850
Flt Protected	0.950					0.950	
Satd. Flow (prot)	1703	3406	1792	3406	1524	1703	1524
Flt Permitted	0.950					0.950	
Satd. Flow (perm)	1703	3406	1792	3406	1524	1703	1524
Right Turn on Red					No		No
Satd. Flow (RTOR)							
Link Speed (mph)		45		45		25	
Link Distance (ft)		1606		558		1108	
Travel Time (s)		24.3		8.5		30.2	
Peak Hour Factor	0.90	0.90	0.90	0.90	0.90	0.90	0.90
Heavy Vehicles (%)	6%	6%	6%	6%	6%	6%	6%
Adj. Flow (vph)	70	1136	0	1253	100	127	99
Shared Lane Traffic (%)							
Lane Group Flow (vph)	70	1136	0	1253	100	127	99
Enter Blocked Intersection	No	No	No	No	No	No	No
Lane Alignment	Left	Left	R NA	Left	Right	Left	Right
Median Width(ft)		12		12		12	
Link Offset(ft)		0		0		0	
Crosswalk Width(ft)		16		16		16	
Two way Left Turn Lane							
Headway Factor	1.00	1.00	1.00	1.00	1.00	1.00	1.00
Turning Speed (mph)	15		9		9	15	9
Number of Detectors	1	2	1	2	1	1	1
Detector Template	Left	Thru	Left	Thru	Right	Left	Right
Leading Detector (ft)	20	100	20	100	20	20	20
Trailing Detector (ft)	0	0	0	0	0	0	0
Detector 1 Position(ft)	0	0	0	0	0	0	0
Detector 1 Size(ft)	20	6	20	6	20	20	20
Detector 1 Type	Cl+Ex	Cl+Ex	Cl+Ex	Cl+Ex	Cl+Ex	Cl+Ex	Cl+Ex
Detector 1 Channel							
Detector 1 Extend (s)	0.0	0.0	0.0	0.0	0.0	0.0	0.0
Detector 1 Queue (s)	0.0	0.0	0.0	0.0	0.0	0.0	0.0
Detector 1 Delay (s)	0.0	0.0	0.0	0.0	0.0	0.0	0.0
Detector 2 Position(ft)		94		94			
Detector 2 Size(ft)		6		6			
Detector 2 Type		Cl+Ex		Cl+Ex			
Detector 2 Channel							
Detector 2 Extend (s)		0.0		0.0			
Turn Type	Prot	NA	Prot	NA	pm+ov	Prot	pm+ov
Protected Phases	5	2	1	6	4	4	5

DocuSign Envelope ID: 5C03745C-4B01-4834-A65D-B77F558A4F46

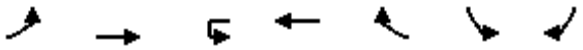

Lane Group	EBL	EBT	WBU	WBT	WBR	SBL	SBR
Permitted Phases					6		4
Detector Phase	5	2	1	6	4	4	5
Switch Phase							
Minimum Initial (s)	7.0	12.0	7.0	12.0	7.0	7.0	7.0
Minimum Split (s)	13.1	18.8	11.9	35.8	36.5	36.5	13.1
Total Split (s)	16.0	71.0	12.0	67.0	37.0	37.0	16.0
Total Split (%)	13.3%	59.2%	10.0%	55.8%	30.8%	30.8%	13.3%
Maximum Green (s)	9.9	64.2	7.1	60.2	30.5	30.5	9.9
Yellow Time (s)	3.0	4.9	3.0	4.9	3.0	3.0	3.0
All-Red Time (s)	3.1	1.9	1.9	1.9	3.5	3.5	3.1
Lost Time Adjust (s)	-1.1	-1.8	0.1	-1.8	-1.8	-1.5	-1.1
Total Lost Time (s)	5.0	5.0	5.0	5.0	4.7	5.0	5.0
Lead/Lag	Lag	Lag	Lead	Lead			Lag
Lead-Lag Optimize?	Yes	Yes	Yes	Yes			Yes
Vehicle Extension (s)	2.0	6.0	2.0	6.0	2.0	2.0	2.0
Minimum Gap (s)	0.2	3.0	0.2	3.0	0.2	0.2	0.2
Time Before Reduce (s)	0.0	15.0	0.0	15.0	0.0	0.0	0.0
Time To Reduce (s)	0.0	30.0	0.0	30.0	0.0	0.0	0.0
Recall Mode	None	C-Max	None	C-Max	None	None	None
Walk Time (s)				7.0	7.0	7.0	
Flash Dont Walk (s)				22.0	23.0	23.0	
Pedestrian Calls (#/hr)				0	0	0	
Act Effct Green (s)	11.0	95.1		79.1	99.3	14.9	30.9
Actuated g/C Ratio	0.09	0.79		0.66	0.83	0.12	0.26
v/c Ratio	0.45	0.42		0.56	0.08	0.60	0.25
Control Delay	61.4	4.8		9.2	1.2	61.1	36.0
Queue Delay	0.0	0.0		0.2	0.0	0.0	0.0
Total Delay	61.4	4.8		9.4	1.2	61.1	36.0
LOS	E	A		A	A	E	D
Approach Delay		8.1		8.8		50.1	
Approach LOS		A		A		D	
Queue Length 50th (ft)	52	117		204	6	94	61
Queue Length 95th (ft)	102	187		320	m11	152	103
Internal Link Dist (ft)		1526		478		1028	
Turn Bay Length (ft)	150				175		175
Base Capacity (vph)	156	2699		2245	1261	454	392
Starvation Cap Reductn	0	0		294	0	0	0
Spillback Cap Reductn	0	66		0	0	0	0
Storage Cap Reductn	0	0		0	0	0	0
Reduced v/c Ratio	0.45	0.43		0.64	0.08	0.28	0.25

Intersection Summary	
Area Type:	Other
Cycle Length: 120	
Actuated Cycle Length: 120	
Offset: 28 (23%), Referenced to phase 2:EBT and 6:WBT, Start of Green	
Natural Cycle: 90	
Control Type: Actuated-Coordinated	
Maximum v/c Ratio: 0.60	

DocuSign Envelope ID: 5C03745C-4B01-4834-A65D-B77F558A4F46

Intersection Signal Delay: 11.8	Intersection LOS: B
Intersection Capacity Utilization 55.8%	ICU Level of Service B
Analysis Period (min) 15	

m Volume for 95th percentile queue is metered by upstream signal.

Splits and Phases: 1: NC 191 (Brevard Rd) & Commercial Access

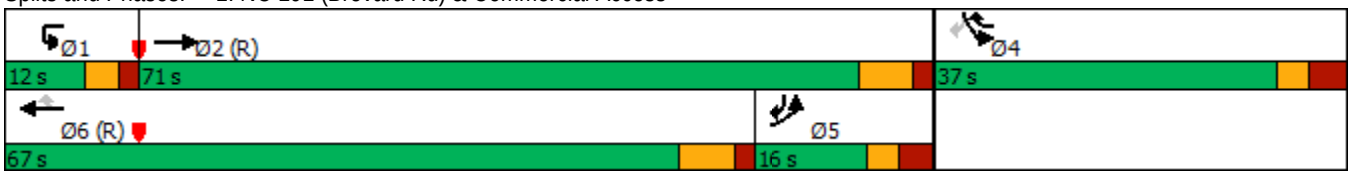

DocuSign Envelope ID: 5C03745C-4B01-4834-A65D-B77F558A4F46

Lane Group	EBT	EBR	WBL	WBT	NBL	NBR
Lane Configurations						
Traffic Volume (vph)	987	149	265	908	310	74
Future Volume (vph)	987	149	265	908	310	74
Ideal Flow (vphpl)	1900	1900	1900	1900	1900	1900
Grade (%)	-1%			-1%	0%	
Storage Length (ft)		225	200		0	0
Storage Lanes		1	1		2	1
Taper Length (ft)			25		25	
Lane Util. Factor	0.95	1.00	1.00	0.95	0.97	1.00
Frt		0.850				0.850
Flt Protected			0.950		0.950	
Satd. Flow (prot)	3423	1449	1620	3423	3303	1524
Flt Permitted			0.950		0.950	
Satd. Flow (perm)	3423	1449	1620	3423	3303	1524
Right Turn on Red		No				Yes
Satd. Flow (RTOR)						36
Link Speed (mph)	45			45	45	
Link Distance (ft)	558			1204	323	
Travel Time (s)	8.5			18.2	4.9	
Peak Hour Factor	0.90	0.90	0.90	0.90	0.90	0.90
Heavy Vehicles (%)	6%	12%	12%	6%	6%	6%
Adj. Flow (vph)	1097	166	294	1009	344	82
Shared Lane Traffic (%)						
Lane Group Flow (vph)	1097	166	294	1009	344	82
Enter Blocked Intersection	No	No	No	No	No	No
Lane Alignment	Left	Right	Left	Left	Left	Right
Median Width(ft)	12			12	40	
Link Offset(ft)	0			0	0	
Crosswalk Width(ft)	16			16	16	
Two way Left Turn Lane						
Headway Factor	0.99	0.99	0.99	0.99	1.00	1.00
Turning Speed (mph)		9	15		15	9
Number of Detectors	2	1	1	2	1	1
Detector Template	Thru	Right	Left	Thru	Left	Right
Leading Detector (ft)	100	20	20	100	20	20
Trailing Detector (ft)	0	0	0	0	0	0
Detector 1 Position(ft)	0	0	0	0	0	0
Detector 1 Size(ft)	6	20	20	6	20	20
Detector 1 Type	Cl+Ex	Cl+Ex	Cl+Ex	Cl+Ex	Cl+Ex	Cl+Ex
Detector 1 Channel						
Detector 1 Extend (s)	0.0	0.0	0.0	0.0	0.0	0.0
Detector 1 Queue (s)	0.0	0.0	0.0	0.0	0.0	0.0
Detector 1 Delay (s)	0.0	0.0	0.0	0.0	0.0	0.0
Detector 2 Position(ft)	94			94		
Detector 2 Size(ft)	6			6		
Detector 2 Type	Cl+Ex			Cl+Ex		
Detector 2 Channel						
Detector 2 Extend (s)	0.0			0.0		
Turn Type	NA	pm+ov	Prot	NA	Prot	pm+ov

DocuSign Envelope ID: 5C03745C-4B01-4834-A65D-B77F558A4F46



Lane Group	EBT	EBR	WBL	WBT	NBL	NBR
Protected Phases	2	4	1	6	4	1
Permitted Phases		2				4
Detector Phase	2	4	1	6	4	1
Switch Phase						
Minimum Initial (s)	12.0	7.0	10.0	12.0	7.0	10.0
Minimum Split (s)	18.0	13.9	16.3	18.6	13.9	16.3
Total Split (s)	57.0	24.0	39.0	96.0	24.0	39.0
Total Split (%)	47.5%	20.0%	32.5%	80.0%	20.0%	32.5%
Maximum Green (s)	51.0	17.1	32.7	89.4	17.1	32.7
Yellow Time (s)	4.4	3.0	3.0	4.7	3.0	3.0
All-Red Time (s)	1.6	3.9	3.3	1.9	3.9	3.3
Lost Time Adjust (s)	-1.0	-1.9	-1.3	-1.6	-1.9	-1.9
Total Lost Time (s)	5.0	5.0	5.0	5.0	5.0	4.4
Lead/Lag	Lead		Lag			Lag
Lead-Lag Optimize?	Yes		Yes			Yes
Vehicle Extension (s)	6.0	5.0	2.5	6.0	5.0	2.5
Minimum Gap (s)	3.0	0.2	0.2	3.0	0.2	0.2
Time Before Reduce (s)	15.0	0.0	0.0	15.0	0.0	0.0
Time To Reduce (s)	30.0	0.0	0.0	30.0	0.0	0.0
Recall Mode	C-Max	None	None	C-Max	None	None
Act Effct Green (s)	52.4	76.0	34.0	91.4	18.6	58.2
Actuated g/C Ratio	0.44	0.63	0.28	0.76	0.16	0.48
v/c Ratio	0.73	0.18	0.64	0.39	0.67	0.11
Control Delay	27.9	8.6	25.5	4.0	55.1	10.3
Queue Delay	0.3	0.0	0.0	0.0	0.0	0.0
Total Delay	28.2	8.6	25.5	4.0	55.1	10.3
LOS	C	A	C	A	E	B
Approach Delay	25.7			8.9	46.5	
Approach LOS	C			A	D	
Queue Length 50th (ft)	382	44	203	79	130	18
Queue Length 95th (ft)	465	72	302	89	181	47
Internal Link Dist (ft)	478			1124	243	
Turn Bay Length (ft)		225	200			
Base Capacity (vph)	1496	910	459	2608	522	757
Starvation Cap Reductn	87	0	0	0	0	0
Spillback Cap Reductn	0	0	0	0	0	0
Storage Cap Reductn	0	0	0	0	0	0
Reduced v/c Ratio	0.78	0.18	0.64	0.39	0.66	0.11

Intersection Summary			
Area Type:	Other		
Cycle Length: 120			
Actuated Cycle Length: 120			
Offset: 4 (3%), Referenced to phase 2:EBT and 6:WBT, Start of Green			
Natural Cycle: 60			
Control Type: Actuated-Coordinated			
Maximum v/c Ratio: 0.73			
Intersection Signal Delay: 21.3		Intersection LOS: C	
Intersection Capacity Utilization 63.3%		ICU Level of Service B	

DocuSign Envelope ID: 5C03745C-4B01-4834-A65D-B77F558A4F46

Analysis Period (min) 15

Splits and Phases: 2: I-26 SEB Ramps & NC 191 (Brevard Rd)

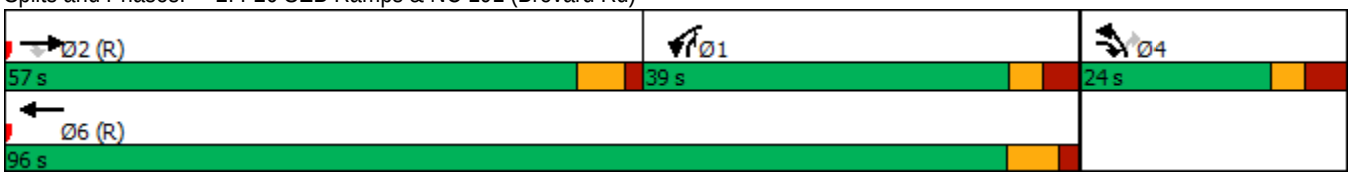

DocuSign Envelope ID: 5C03745C-4B01-4834-A65D-B77F558A4F46

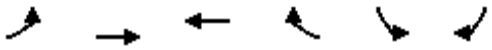

Lane Group	EBL	EBT	WBT	WBR	SBL	SBR
Lane Configurations						
Traffic Volume (vph)	214	847	979	47	373	194
Future Volume (vph)	214	847	979	47	373	194
Ideal Flow (vphpl)	1900	1900	1900	1900	1900	1900
Grade (%)		2%	-2%		2%	
Storage Length (ft)	625			200	0	400
Storage Lanes	2			1	2	1
Taper Length (ft)	25				25	
Lane Util. Factor	0.97	0.95	0.95	1.00	0.97	1.00
Frt				0.850		0.850
Flt Protected	0.950				0.950	
Satd. Flow (prot)	3095	3340	3408	1456	3240	1494
Flt Permitted	0.950				0.950	
Satd. Flow (perm)	3095	3340	3408	1456	3240	1494
Right Turn on Red				No		No
Satd. Flow (RTOR)						
Link Speed (mph)		45	45		45	
Link Distance (ft)		802	1565		860	
Travel Time (s)		12.2	23.7		13.0	
Peak Hour Factor	0.90	0.90	0.90	0.90	0.90	0.90
Heavy Vehicles (%)	12%	7%	7%	12%	7%	7%
Adj. Flow (vph)	238	941	1088	52	414	216
Shared Lane Traffic (%)						
Lane Group Flow (vph)	238	941	1088	52	414	216
Enter Blocked Intersection	No	No	No	No	No	No
Lane Alignment	Left	Left	Left	Right	Left	Right
Median Width(ft)		24	12		36	
Link Offset(ft)		0	0		0	
Crosswalk Width(ft)		16	16		16	
Two way Left Turn Lane						
Headway Factor	1.01	1.01	0.99	0.99	1.01	1.01
Turning Speed (mph)	15			9	15	9
Number of Detectors	1	2	2	1	1	1
Detector Template	Left	Thru	Thru	Right	Left	Right
Leading Detector (ft)	20	100	100	20	20	20
Trailing Detector (ft)	0	0	0	0	0	0
Detector 1 Position(ft)	0	0	0	0	0	0
Detector 1 Size(ft)	20	6	6	20	20	20
Detector 1 Type	Cl+Ex	Cl+Ex	Cl+Ex	Cl+Ex	Cl+Ex	Cl+Ex
Detector 1 Channel						
Detector 1 Extend (s)	0.0	0.0	0.0	0.0	0.0	0.0
Detector 1 Queue (s)	0.0	0.0	0.0	0.0	0.0	0.0
Detector 1 Delay (s)	0.0	0.0	0.0	0.0	0.0	0.0
Detector 2 Position(ft)		94	94			
Detector 2 Size(ft)		6	6			
Detector 2 Type		Cl+Ex	Cl+Ex			
Detector 2 Channel						
Detector 2 Extend (s)		0.0	0.0			
Turn Type	Prot	NA	NA	pm+ov	Prot	pm+ov

DocuSign Envelope ID: 5C03745C-4B01-4834-A65D-B77F558A4F46

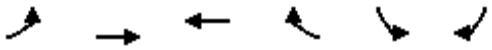

Lane Group	EBL	EBT	WBT	WBR	SBL	SBR
Protected Phases	5	2	6	4	4	5
Permitted Phases				6		4
Detector Phase	5	2	6	4	4	5
Switch Phase						
Minimum Initial (s)	7.0	12.0	12.0	7.0	7.0	7.0
Minimum Split (s)	14.0	19.0	25.0	25.0	25.0	14.0
Total Split (s)	23.0	89.0	66.0	31.0	31.0	23.0
Total Split (%)	19.2%	74.2%	55.0%	25.8%	25.8%	19.2%
Maximum Green (s)	16.0	82.0	59.0	24.0	24.0	16.0
Yellow Time (s)	5.0	5.0	5.0	5.0	5.0	5.0
All-Red Time (s)	2.0	2.0	2.0	2.0	2.0	2.0
Lost Time Adjust (s)	-2.0	-2.0	-2.0	-2.0	-2.0	-2.0
Total Lost Time (s)	5.0	5.0	5.0	5.0	5.0	5.0
Lead/Lag	Lag		Lead			Lag
Lead-Lag Optimize?	Yes		Yes			Yes
Vehicle Extension (s)	3.0	3.0	3.0	3.0	3.0	3.0
Minimum Gap (s)	0.2	3.0	3.0	0.2	0.2	0.2
Time Before Reduce (s)	0.0	15.0	15.0	0.0	0.0	0.0
Time To Reduce (s)	0.0	30.0	30.0	0.0	0.0	0.0
Recall Mode	None	C-Max	C-Max	None	None	None
Walk Time (s)			7.0	7.0	7.0	
Flash Dont Walk (s)			11.0	11.0	11.0	
Pedestrian Calls (#/hr)			0	0	0	
Act Effct Green (s)	18.0	87.8	64.8	92.0	22.2	45.2
Actuated g/C Ratio	0.15	0.73	0.54	0.77	0.18	0.38
v/c Ratio	0.51	0.39	0.59	0.05	0.69	0.38
Control Delay	21.2	1.4	20.8	3.5	51.9	29.0
Queue Delay	0.0	0.0	0.0	0.0	0.0	0.0
Total Delay	21.2	1.4	20.8	3.5	51.9	29.0
LOS	C	A	C	A	D	C
Approach Delay		5.4	20.0		44.0	
Approach LOS		A	B		D	
Queue Length 50th (ft)	90	18	289	8	155	120
Queue Length 95th (ft)	m113	27	381	17	202	179
Internal Link Dist (ft)		722	1485		780	
Turn Bay Length (ft)	625			200		400
Base Capacity (vph)	464	2444	1841	1104	702	562
Starvation Cap Reductn	0	0	0	0	0	0
Spillback Cap Reductn	0	0	0	0	0	0
Storage Cap Reductn	0	0	0	0	0	0
Reduced v/c Ratio	0.51	0.39	0.59	0.05	0.59	0.38

Intersection Summary	
Area Type:	Other
Cycle Length: 120	
Actuated Cycle Length: 120	
Offset: 2 (2%), Referenced to phase 2:EBT and 6:WBT, Start of Green	
Natural Cycle: 65	
Control Type: Actuated-Coordinated	

DocuSign Envelope ID: 5C03745C-4B01-4834-A65D-B77F558A4F46

Maximum v/c Ratio: 0.69	
Intersection Signal Delay: 19.3	Intersection LOS: B
Intersection Capacity Utilization 56.3%	ICU Level of Service B
Analysis Period (min) 15	

m Volume for 95th percentile queue is metered by upstream signal.

Splits and Phases: 3: NC 191 (Brevard Rd) & I-26 NWB Ramps

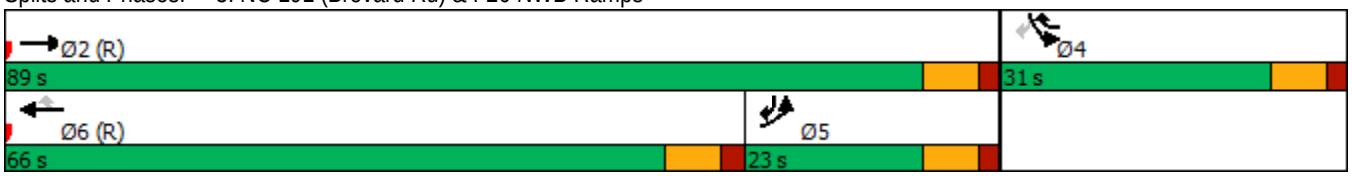

DocuSign Envelope ID: 5C03745C-4B01-4834-A65D-B77F558A4F46

Intersection	
Int Delay, s/veh	2.2

Movement	EBL	EBR	NBL	NBT	SBT	SBR
Lane Configurations						
Traffic Vol, veh/h	56	19	22	127	159	83
Future Vol, veh/h	56	19	22	127	159	83
Conflicting Peds, #/hr	0	0	0	0	0	0
Sign Control	Stop	Stop	Free	Free	Free	Free
RT Channelized	-	None	-	None	-	None
Storage Length	75	0	275	-	-	-
Veh in Median Storage, #	0	-	-	0	0	-
Grade, %	0	-	-	0	3	-
Peak Hour Factor	90	90	90	90	90	90
Heavy Vehicles, %	2	2	2	2	2	2
Mvmt Flow	62	21	24	141	177	92

Major/Minor	Minor2		Major1		Major2	
Conflicting Flow All	412	223	269	0	-	0
Stage 1	223	-	-	-	-	-
Stage 2	189	-	-	-	-	-
Critical Hdwy	6.42	6.22	4.12	-	-	-
Critical Hdwy Stg 1	5.42	-	-	-	-	-
Critical Hdwy Stg 2	5.42	-	-	-	-	-
Follow-up Hdwy	3.518	3.318	2.218	-	-	-
Pot Cap-1 Maneuver	596	817	1295	-	-	-
Stage 1	814	-	-	-	-	-
Stage 2	843	-	-	-	-	-
Platoon blocked, %				-	-	-
Mov Cap-1 Maneuver	585	817	1295	-	-	-
Mov Cap-2 Maneuver	585	-	-	-	-	-
Stage 1	799	-	-	-	-	-
Stage 2	843	-	-	-	-	-

Approach	EB	NB	SB
HCM Control Delay, s	11.3	1.2	0
HCM LOS	B		

Minor Lane/Major Mvmt	NBL	NBT	EBLn1	EBLn2	SBT	SBR
Capacity (veh/h)	1295	-	585	817	-	-
HCM Lane V/C Ratio	0.019	-	0.106	0.026	-	-
HCM Control Delay (s)	7.8	-	11.9	9.5	-	-
HCM Lane LOS	A	-	B	A	-	-
HCM 95th %tile Q(veh)	0.1	-	0.4	0.1	-	-

DocuSign Envelope ID: 5C03745C-4B01-4834-A65D-B77F558A4F46

Lane Group	EBL	EBT	EBR	WBL	WBT	WBR	NBL	NBT	NBR	SBL	SBT	SBR
Lane Configurations												
Traffic Volume (vph)	38	111	34	81	121	252	62	671	133	356	575	59
Future Volume (vph)	38	111	34	81	121	252	62	671	133	356	575	59
Ideal Flow (vphpl)	1900	1900	1900	1900	1900	1900	1900	1900	1900	1900	1900	1900
Grade (%)		3%			0%			2%			-7%	
Storage Length (ft)	0		0	200		0	175		150	200		0
Storage Lanes	1		0	1		1	1		1	2		0
Taper Length (ft)	25			25			25			25		
Lane Util. Factor	1.00	0.95	0.95	1.00	1.00	1.00	1.00	0.95	1.00	0.97	0.95	0.95
Frt		0.965				0.850			0.850		0.986	
Flt Protected	0.950			0.950			0.950			0.950		
Satd. Flow (prot)	1743	3364	0	1719	1810	1538	1686	3372	1508	3452	3509	0
Flt Permitted	0.950			0.950			0.950			0.950		
Satd. Flow (perm)	1743	3364	0	1719	1810	1538	1686	3372	1508	3452	3509	0
Right Turn on Red			No			No			No			No
Satd. Flow (RTOR)												
Link Speed (mph)		35			35			45			45	
Link Distance (ft)		248			1200			1589			1600	
Travel Time (s)		4.8			23.4			24.1			24.2	
Peak Hour Factor	0.90	0.90	0.90	0.90	0.90	0.90	0.90	0.90	0.90	0.90	0.90	0.90
Heavy Vehicles (%)	2%	2%	2%	5%	5%	5%	6%	6%	6%	5%	5%	5%
Adj. Flow (vph)	42	123	38	90	134	280	69	746	148	396	639	66
Shared Lane Traffic (%)												
Lane Group Flow (vph)	42	161	0	90	134	280	69	746	148	396	705	0
Enter Blocked Intersection	No	No	No	No	No	No	No	No	No	No	No	No
Lane Alignment	L NA	Left	Right	Left	Left	Left	Left	L NA	Right	Left	Left	Right
Median Width(ft)		12			12			24			24	
Link Offset(ft)		0			0			0			0	
Crosswalk Width(ft)		16			16			16			16	
Two way Left Turn Lane												
Headway Factor	1.02	1.02	1.02	1.00	1.00	1.00	1.01	1.01	1.01	0.96	0.96	0.96
Turning Speed (mph)	15		9	15		9	15		9	15		9
Number of Detectors	1	2		1	2	1	1	2	1	1	2	
Detector Template	Left	Thru		Left	Thru	Right	Left	Thru	Right	Left	Thru	
Leading Detector (ft)	20	100		20	100	20	20	100	20	20	100	
Trailing Detector (ft)	0	0		0	0	0	0	0	0	0	0	
Detector 1 Position(ft)	0	0		0	0	0	0	0	0	0	0	
Detector 1 Size(ft)	20	6		20	6	20	20	6	20	20	6	
Detector 1 Type	Cl+Ex	Cl+Ex		Cl+Ex	Cl+Ex	Cl+Ex	Cl+Ex	Cl+Ex	Cl+Ex	Cl+Ex	Cl+Ex	
Detector 1 Channel												
Detector 1 Extend (s)	0.0	0.0		0.0	0.0	0.0	0.0	0.0	0.0	0.0	0.0	
Detector 1 Queue (s)	0.0	0.0		0.0	0.0	0.0	0.0	0.0	0.0	0.0	0.0	
Detector 1 Delay (s)	0.0	0.0		0.0	0.0	0.0	0.0	0.0	0.0	0.0	0.0	
Detector 2 Position(ft)		94			94			94			94	
Detector 2 Size(ft)		6			6			6			6	
Detector 2 Type		Cl+Ex			Cl+Ex			Cl+Ex			Cl+Ex	
Detector 2 Channel												
Detector 2 Extend (s)		0.0			0.0			0.0			0.0	
Turn Type	Prot	NA		Prot	NA	pm+ov	Prot	NA	pm+ov	Prot	NA	

DocuSign Envelope ID: 5C03745C-4B01-4834-A65D-B77F558A4F46

Lane Group	EBL	EBT	EBR	WBL	WBT	WBR	NBL	NBT	NBR	SBL	SBT	SBR
Protected Phases	7	4		3	8	1	5	2	3	1	6	
Permitted Phases						8			2			
Detector Phase	7	4		3	8	1	5	2	3	1	6	
Switch Phase												
Minimum Initial (s)	7.0	7.0		7.0	7.0	7.0	7.0	12.0	7.0	7.0	12.0	
Minimum Split (s)	14.0	14.0		14.0	14.0	14.0	14.0	19.0	14.0	14.0	19.0	
Total Split (s)	16.0	20.0		20.0	24.0	29.0	17.0	51.0	20.0	29.0	63.0	
Total Split (%)	13.3%	16.7%		16.7%	20.0%	24.2%	14.2%	42.5%	16.7%	24.2%	52.5%	
Maximum Green (s)	9.0	13.0		13.0	17.0	22.0	10.0	44.0	13.0	22.0	56.0	
Yellow Time (s)	5.0	5.0		5.0	5.0	5.0	5.0	5.0	5.0	5.0	5.0	
All-Red Time (s)	2.0	2.0		2.0	2.0	2.0	2.0	2.0	2.0	2.0	2.0	
Lost Time Adjust (s)	-2.0	-2.0		-2.0	-2.0	-2.0	-2.0	-2.0	-2.0	-2.0	-2.0	
Total Lost Time (s)	5.0	5.0		5.0	5.0	5.0	5.0	5.0	5.0	5.0	5.0	
Lead/Lag	Lead	Lag		Lead	Lag	Lead	Lead	Lag	Lead	Lead	Lag	
Lead-Lag Optimize?	Yes	Yes		Yes	Yes	Yes	Yes	Yes	Yes	Yes	Yes	
Vehicle Extension (s)	3.0	3.0		3.0	3.0	3.0	3.0	3.0	3.0	3.0	3.0	
Minimum Gap (s)	3.0	3.0		3.0	3.0	3.0	3.0	3.0	3.0	3.0	3.0	
Time Before Reduce (s)	0.0	0.0		0.0	0.0	0.0	0.0	15.0	0.0	0.0	15.0	
Time To Reduce (s)	0.0	0.0		0.0	0.0	0.0	0.0	30.0	0.0	0.0	30.0	
Recall Mode	None	None		None	None	None	None	Min	None	None	Min	
Act Effct Green (s)	10.1	12.0		12.3	21.0	44.4	10.9	29.4	46.8	18.3	40.4	
Actuated g/C Ratio	0.11	0.13		0.13	0.23	0.48	0.12	0.32	0.51	0.20	0.44	
v/c Ratio	0.22	0.37		0.39	0.33	0.38	0.35	0.70	0.19	0.58	0.46	
Control Delay	46.4	42.4		46.3	38.9	20.6	47.9	32.1	13.9	38.9	20.8	
Queue Delay	0.0	0.0		0.0	0.0	0.0	0.0	0.0	0.0	0.0	0.0	
Total Delay	46.4	42.4		46.3	38.9	20.6	47.9	32.1	13.9	38.9	20.8	
LOS	D	D		D	D	C	D	C	B	D	C	
Approach Delay		43.2			30.1			30.4			27.3	
Approach LOS		D			C			C			C	
Queue Length 50th (ft)	23	45		48	71	113	37	196	44	107	160	
Queue Length 95th (ft)	66	92		114	154	221	95	304	92	186	231	
Internal Link Dist (ft)		168			1120			1509			1520	
Turn Bay Length (ft)				200			175		150	200		
Base Capacity (vph)	213	561		286	434	845	225	1725	814	922	2264	
Starvation Cap Reductn	0	0		0	0	0	0	0	0	0	0	
Spillback Cap Reductn	0	0		0	0	0	0	0	0	0	0	
Storage Cap Reductn	0	0		0	0	0	0	0	0	0	0	
Reduced v/c Ratio	0.20	0.29		0.31	0.31	0.33	0.31	0.43	0.18	0.43	0.31	

Intersection Summary			
Area Type:	Other		
Cycle Length: 120			
Actuated Cycle Length: 92.5			
Natural Cycle: 65			
Control Type: Actuated-Uncoordinated			
Maximum v/c Ratio: 0.70			
Intersection Signal Delay: 30.1		Intersection LOS: C	
Intersection Capacity Utilization 57.6%		ICU Level of Service B	
Analysis Period (min) 15			

DocuSign Envelope ID: 5C03745C-4B01-4834-A65D-B77F558A4F46

Splits and Phases: 5: NC 191 (Brevard Rd) & Blue Ridge Pkwy Access/NC 191 Connector

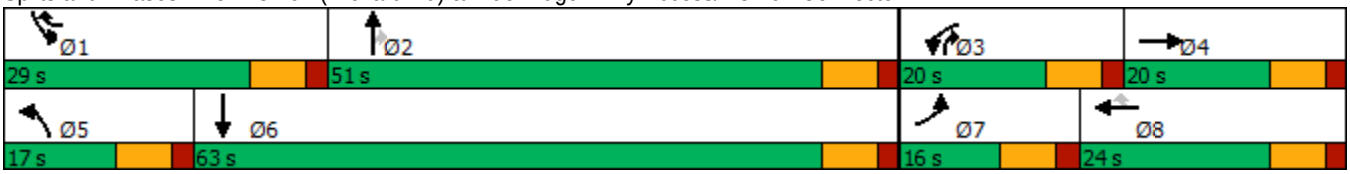

DocuSign Envelope ID: 5C03745C-4B01-4834-A65D-B77F558A4F46

Intersection	
Int Delay, s/veh	0

Movement	EBL	EBT	EBR	WBL	WBT	WBR	NBL	NBT	NBR	SBL	SBT	SBR
Lane Configurations		↑	↱		↰						↑	↱
Traffic Vol, veh/h	0	331	302	1	417	0	0	0	0	0	1	506
Future Vol, veh/h	0	331	302	1	417	0	0	0	0	0	1	506
Conflicting Peds, #/hr	0	0	0	0	0	0	0	0	0	0	0	0
Sign Control	Free	Free	Free	Free	Free	Free	Stop	Stop	Stop	Stop	Stop	Stop
RT Channelized	-	-	Yield	-	-	None	-	-	None	-	-	Yield
Storage Length	-	-	200	-	-	-	-	-	-	-	-	325
Veh in Median Storage, #	-	0	-	-	0	-	-	16974	-	-	0	-
Grade, %	-	0	-	-	0	-	-	0	-	-	0	-
Peak Hour Factor	90	90	90	90	90	90	90	90	90	90	90	90
Heavy Vehicles, %	2	5	12	12	5	2	2	2	2	2	12	5
Mvmt Flow	0	368	336	1	463	0	0	0	0	0	1	562

Major/Minor	Major1			Major2					Minor2			
Conflicting Flow All	-	0	0	368	0	0			-	833	463	
Stage 1	-	-	-	-	-	-			-	465	-	
Stage 2	-	-	-	-	-	-			-	368	-	
Critical Hdwy	-	-	-	4.22	-	-			-	6.62	6.25	
Critical Hdwy Stg 1	-	-	-	-	-	-			-	5.62	-	
Critical Hdwy Stg 2	-	-	-	-	-	-			-	5.62	-	
Follow-up Hdwy	-	-	-	2.308	-	-			-	4.108	3.345	
Pot Cap-1 Maneuver	0	-	-	1137	-	0			0	293	593	
Stage 1	0	-	-	-	-	0			0	546	-	
Stage 2	0	-	-	-	-	0			0	604	-	
Platoon blocked, %		-	-		-							
Mov Cap-1 Maneuver	-	-	-	1137	-	-			-	0	593	
Mov Cap-2 Maneuver	-	-	-	-	-	-			-	0	-	
Stage 1	-	-	-	-	-	-			-	0	-	
Stage 2	-	-	-	-	-	-			-	0	-	

Approach	EB	WB	SB
HCM Control Delay, s	0	0	
HCM LOS			-

Minor Lane/Major Mvmt	EBT	EBR	WBL	WBT	SBLn1	SBLn2
Capacity (veh/h)	-	-	1137	-	-	593
HCM Lane V/C Ratio	-	-	0.001	-	-	0.948
HCM Control Delay (s)	-	-	8.2	0	-	51.6
HCM Lane LOS	-	-	A	A	-	F
HCM 95th %tile Q(veh)	-	-	0	-	-	12.7

DocuSign Envelope ID: 5C03745C-4B01-4834-A65D-B77F558A4F46

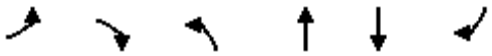

Lane Group	EBL	EBR	NBL	NBT	SBT	SBR
Lane Configurations						
Traffic Volume (vph)	331	0	417	1	0	0
Future Volume (vph)	331	0	417	1	0	0
Ideal Flow (vphpl)	1900	1900	1900	1900	1900	1900
Lane Util. Factor	1.00	1.00	1.00	1.00	1.00	1.00
Frt						
Flt Protected	0.950			0.952		
Satd. Flow (prot)	1612	0	0	1722	0	0
Flt Permitted	0.950			0.952		
Satd. Flow (perm)	1612	0	0	1722	0	0
Right Turn on Red		No				No
Satd. Flow (RTOR)						
Link Speed (mph)	35			45	45	
Link Distance (ft)	546			940	894	
Travel Time (s)	10.6			14.2	13.5	
Peak Hour Factor	0.90	0.90	0.90	0.90	0.90	0.90
Heavy Vehicles (%)	12%	2%	5%	12%	2%	2%
Adj. Flow (vph)	368	0	463	1	0	0
Shared Lane Traffic (%)						
Lane Group Flow (vph)	368	0	0	464	0	0
Enter Blocked Intersection	No	No	No	No	No	No
Lane Alignment	Left	Right	Left	Left	Left	Right
Median Width(ft)	12			0	0	
Link Offset(ft)	0			0	0	
Crosswalk Width(ft)	16			16	16	
Two way Left Turn Lane						
Headway Factor	1.00	1.00	1.00	1.00	1.00	1.00
Turning Speed (mph)	15	9	15			9
Number of Detectors	1		1	2		
Detector Template	Left		Left	Thru		
Leading Detector (ft)	20		20	100		
Trailing Detector (ft)	0		0	0		
Detector 1 Position(ft)	0		0	0		
Detector 1 Size(ft)	20		20	6		
Detector 1 Type	Cl+Ex		Cl+Ex	Cl+Ex		
Detector 1 Channel						
Detector 1 Extend (s)	0.0		0.0	0.0		
Detector 1 Queue (s)	0.0		0.0	0.0		
Detector 1 Delay (s)	0.0		0.0	0.0		
Detector 2 Position(ft)				94		
Detector 2 Size(ft)				6		
Detector 2 Type				Cl+Ex		
Detector 2 Channel						
Detector 2 Extend (s)				0.0		
Turn Type	Prot		Split	NA		
Protected Phases	2		4	4		
Permitted Phases						
Detector Phase	2		4	4		
Switch Phase						

DocuSign Envelope ID: 5C03745C-4B01-4834-A65D-B77F558A4F46

Lane Group	EBL	EBR	NBL	NBT	SBT	SBR
Minimum Initial (s)	10.0		7.0	7.0		
Minimum Split (s)	17.0		14.0	14.0		
Total Split (s)	29.0		31.0	31.0		
Total Split (%)	48.3%		51.7%	51.7%		
Maximum Green (s)	22.0		24.0	24.0		
Yellow Time (s)	5.0		5.0	5.0		
All-Red Time (s)	2.0		2.0	2.0		
Lost Time Adjust (s)	-2.0			-2.0		
Total Lost Time (s)	5.0			5.0		
Lead/Lag						
Lead-Lag Optimize?						
Vehicle Extension (s)	3.0		3.0	3.0		
Recall Mode	Min		None	None		
Act Effct Green (s)	18.2			19.7		
Actuated g/C Ratio	0.38			0.41		
v/c Ratio	0.61			0.66		
Control Delay	18.1			17.5		
Queue Delay	0.0			0.0		
Total Delay	18.1			17.5		
LOS	B			B		
Approach Delay	18.1			17.5		
Approach LOS	B			B		
Queue Length 50th (ft)	79			98		
Queue Length 95th (ft)	174			211		
Internal Link Dist (ft)	466			860	814	
Turn Bay Length (ft)						
Base Capacity (vph)	838			970		
Starvation Cap Reductn	0			0		
Spillback Cap Reductn	0			0		
Storage Cap Reductn	0			0		
Reduced v/c Ratio	0.44			0.48		

Intersection Summary			
Area Type:	Other		
Cycle Length: 60			
Actuated Cycle Length: 48.4			
Natural Cycle: 45			
Control Type: Actuated-Uncoordinated			
Maximum v/c Ratio: 0.66			
Intersection Signal Delay: 17.8		Intersection LOS: B	
Intersection Capacity Utilization 49.8%		ICU Level of Service A	
Analysis Period (min) 15			

Splits and Phases: 7: HE-0001 NWB Ramp & NC 191 Connector

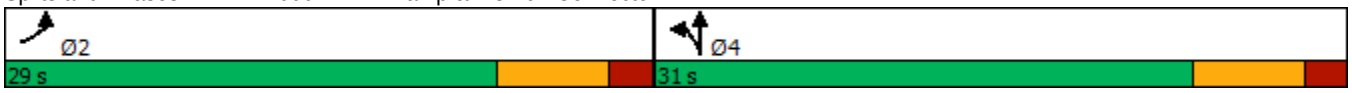

DocuSign Envelope ID: 5C03745C-4B01-4834-A65D-B77F558A4F46

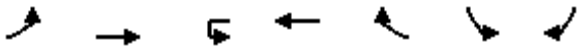

Lane Group	EBL	EBT	WBU	WBT	WBR	SBL	SBR
Lane Configurations							
Traffic Volume (vph)	42	673	0	697	315	402	56
Future Volume (vph)	42	673	0	697	315	402	56
Ideal Flow (vphpl)	1900	1900	1900	1900	1900	1900	1900
Grade (%)		-9%		5%		-9%	
Storage Length (ft)	500		350		0	0	400
Storage Lanes	1		1		1	2	1
Taper Length (ft)	25		25			25	
Lane Util. Factor	1.00	1.00	1.00	1.00	1.00	0.97	1.00
Frt					0.850		0.850
Flt Protected	0.950					0.950	
Satd. Flow (prot)	1715	1805	1715	1715	1458	3485	1607
Flt Permitted	0.950					0.950	
Satd. Flow (perm)	1715	1805	1715	1715	1458	3485	1607
Right Turn on Red					No		No
Satd. Flow (RTOR)							
Link Speed (mph)		35		35		45	
Link Distance (ft)		1579		1808		1089	
Travel Time (s)		30.8		35.2		16.5	
Peak Hour Factor	0.90	0.90	0.90	0.90	0.90	0.90	0.90
Heavy Vehicles (%)	10%	10%	8%	8%	8%	5%	5%
Adj. Flow (vph)	47	748	0	774	350	447	62
Shared Lane Traffic (%)							
Lane Group Flow (vph)	47	748	0	774	350	447	62
Enter Blocked Intersection	No	No	No	No	No	No	No
Lane Alignment	Left	Left	R NA	Left	Right	Left	Right
Median Width(ft)		12		12		24	
Link Offset(ft)		0		0		0	
Crosswalk Width(ft)		16		16		16	
Two way Left Turn Lane							
Headway Factor	0.94	0.94	1.03	1.03	1.03	0.94	0.94
Turning Speed (mph)	15		9		9	15	9
Number of Detectors	1	2	1	2	1	1	1
Detector Template	Left	Thru	Left	Thru	Right	Left	Right
Leading Detector (ft)	20	100	20	100	20	20	20
Trailing Detector (ft)	0	0	0	0	0	0	0
Detector 1 Position(ft)	0	0	0	0	0	0	0
Detector 1 Size(ft)	20	6	20	6	20	20	20
Detector 1 Type	Cl+Ex	Cl+Ex	Cl+Ex	Cl+Ex	Cl+Ex	Cl+Ex	Cl+Ex
Detector 1 Channel							
Detector 1 Extend (s)	0.0	0.0	0.0	0.0	0.0	0.0	0.0
Detector 1 Queue (s)	0.0	0.0	0.0	0.0	0.0	0.0	0.0
Detector 1 Delay (s)	0.0	0.0	0.0	0.0	0.0	0.0	0.0
Detector 2 Position(ft)		94		94			
Detector 2 Size(ft)		6		6			
Detector 2 Type		Cl+Ex		Cl+Ex			
Detector 2 Channel							
Detector 2 Extend (s)		0.0		0.0			
Turn Type	Prot	NA	Prot	NA	pm+ov	Prot	pm+ov

DocuSign Envelope ID: 5C03745C-4B01-4834-A65D-B77F558A4F46

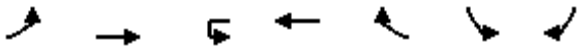

Lane Group	EBL	EBT	WBU	WBT	WBR	SBL	SBR
Protected Phases	5	2	1	6	4	4	5
Permitted Phases					6		4
Detector Phase	5	2	1	6	4	4	5
Switch Phase							
Minimum Initial (s)	7.0	10.0	7.0	10.0	7.0	7.0	7.0
Minimum Split (s)	13.7	17.3	13.3	17.3	13.8	13.8	13.7
Total Split (s)	17.0	125.0	14.0	122.0	41.0	41.0	17.0
Total Split (%)	9.4%	69.4%	7.8%	67.8%	22.8%	22.8%	9.4%
Maximum Green (s)	10.3	117.7	7.7	114.7	34.2	34.2	10.3
Yellow Time (s)	3.3	4.6	3.0	4.6	3.3	3.3	3.3
All-Red Time (s)	3.4	2.7	3.3	2.7	3.5	3.5	3.4
Lost Time Adjust (s)	-1.7	-2.3	-1.3	-2.3	-2.3	-1.8	-1.8
Total Lost Time (s)	5.0	5.0	5.0	5.0	4.5	5.0	4.9
Lead/Lag	Lead	Lag	Lead	Lag			Lead
Lead-Lag Optimize?	Yes	Yes	Yes	Yes			Yes
Vehicle Extension (s)	2.0	3.0	2.0	3.0	3.0	3.0	2.0
Recall Mode	None	C-Max	None	C-Max	None	None	None
Act Effct Green (s)	10.8	139.6		123.9	159.7	30.4	46.2
Actuated g/C Ratio	0.06	0.78		0.69	0.89	0.17	0.26
v/c Ratio	0.46	0.53		0.66	0.27	0.76	0.15
Control Delay	96.0	9.9		11.1	3.3	79.9	50.9
Queue Delay	0.0	0.0		0.0	0.0	0.0	0.0
Total Delay	96.0	9.9		11.1	3.3	79.9	50.9
LOS	F	A		B	A	E	D
Approach Delay		15.0		8.7		76.4	
Approach LOS		B		A		E	
Queue Length 50th (ft)	55	310		293	87	262	57
Queue Length 95th (ft)	103	451		560	118	317	97
Internal Link Dist (ft)		1499		1728		1009	
Turn Bay Length (ft)	500						400
Base Capacity (vph)	115	1400		1180	1339	697	425
Starvation Cap Reductn	0	0		0	0	0	0
Spillback Cap Reductn	0	0		0	0	0	0
Storage Cap Reductn	0	0		0	0	0	0
Reduced v/c Ratio	0.41	0.53		0.66	0.26	0.64	0.15

Intersection Summary			
Area Type:	Other		
Cycle Length: 180			
Actuated Cycle Length: 180			
Offset: 24 (13%), Referenced to phase 2:EBT and 6:WBT, Start of Green			
Natural Cycle: 75			
Control Type: Actuated-Coordinated			
Maximum v/c Ratio: 0.76			
Intersection Signal Delay: 24.9		Intersection LOS: C	
Intersection Capacity Utilization 56.5%		ICU Level of Service B	
Analysis Period (min) 15			

DocuSign Envelope ID: 5C03745C-4B01-4834-A65D-B77F558A4F46

Splits and Phases: 8: NC 146 (Long Shoals Rd) & Clayton Rd

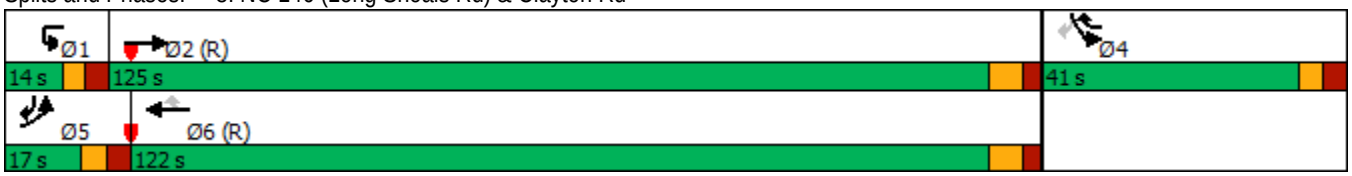

DocuSign Envelope ID: 5C03745C-4B01-4834-A65D-B77F558A4F46

Intersection	
Int Delay, s/veh	35.7

Movement	EBU	EBT	EBR	WBL	WBT	NBL	NBR
Lane Configurations							
Traffic Vol, veh/h	0	981	23	216	1029	47	481
Future Vol, veh/h	0	981	23	216	1029	47	481
Conflicting Peds, #/hr	0	0	0	0	0	0	0
Sign Control	Free	Free	Free	Free	Free	Stop	Stop
RT Channelized	-	-	None	-	None	-	Stop
Storage Length	325	-	-	325	-	200	0
Veh in Median Storage, #	-	0	-	-	0	0	-
Grade, %	-	0	-	-	0	0	-
Peak Hour Factor	90	90	90	90	90	90	90
Heavy Vehicles, %	8	8	8	8	8	3	3
Mvmt Flow	0	1090	26	240	1143	52	534

Major/Minor	Major1			Major2		Minor1	
Conflicting Flow All	1143	0	0	1116	0	2155	558
Stage 1	-	-	-	-	-	1103	-
Stage 2	-	-	-	-	-	1052	-
Critical Hdwy	6.56	-	-	4.26	-	6.86	6.96
Critical Hdwy Stg 1	-	-	-	-	-	5.86	-
Critical Hdwy Stg 2	-	-	-	-	-	5.86	-
Follow-up Hdwy	2.58	-	-	2.28	-	3.53	3.33
Pot Cap-1 Maneuver	255	-	-	588	-	~ 40	~ 471
Stage 1	-	-	-	-	-	277	-
Stage 2	-	-	-	-	-	295	-
Platoon blocked, %		-	-		-		
Mov Cap-1 Maneuver	255	-	-	588	-	~ 24	~ 471
Mov Cap-2 Maneuver	-	-	-	-	-	~ 24	-
Stage 1	-	-	-	-	-	277	-
Stage 2	-	-	-	-	-	175	-

Approach	EB	WB	NB
HCM Control Delay, s	0	2.7	181.2
HCM LOS			F

Minor Lane/Major Mvmt	NBLn1	NBLn2	EBU	EBT	EBR	WBL	WBT
Capacity (veh/h)	24	471	255	-	-	588	-
HCM Lane V/C Ratio	2.176	1.135	-	-	-	0.408	-
HCM Control Delay (s)	$ 885.3	112.4	0	-	-	15.3	-
HCM Lane LOS	F	F	A	-	-	C	-
HCM 95th %tile Q(veh)	6.5	18.7	0	-	-	2	-

Notes			
~: Volume exceeds capacity	$: Delay exceeds 300s	+: Computation Not Defined	*: All major volume in platoon

DocuSign Envelope ID: 5C03745C-4B01-4834-A65D-B77F558A4F46

Lane Group	EBL	EBT	EBR2	WBL	WBT	SEL	SER2	NWL
Lane Configurations								
Traffic Volume (vph)	230	1046	186	398	707	1194	288	250
Future Volume (vph)	230	1046	186	398	707	1194	288	250
Ideal Flow (vphpl)	1900	1900	1900	1900	1900	1900	1900	1900
Grade (%)		3%			-7%			
Storage Length (ft)	475			0		0		0
Storage Lanes	2			2		2		2
Taper Length (ft)	25			25		25		25
Lane Util. Factor	0.97	0.95	1.00	0.97	0.95	0.97	1.00	0.97
Frt			0.850				0.850	
Flt Protected	0.950			0.950		0.950		0.950
Satd. Flow (prot)	3080	3292	1420	3236	3593	3434	1525	3291
Flt Permitted	0.950			0.950		0.950		0.950
Satd. Flow (perm)	3080	3292	1420	3236	3593	3434	1525	3291
Right Turn on Red			Yes				Yes	
Satd. Flow (RTOR)			190				190	
Link Speed (mph)		45			45			
Link Distance (ft)		1000			418			
Travel Time (s)		15.2			6.3			
Peak Hour Factor	0.90	0.90	0.90	0.90	0.90	0.90	0.90	0.90
Heavy Vehicles (%)	12%	8%	12%	12%	4%	4%	8%	8%
Adj. Flow (vph)	256	1162	207	442	786	1327	320	278
Shared Lane Traffic (%)								
Lane Group Flow (vph)	256	1162	207	442	786	1327	320	278
Enter Blocked Intersection	No	No	No	No	No	No	No	No
Lane Alignment	Left	Left	Right	Left	Left	Left	Right	Left
Median Width(ft)		24			24			
Link Offset(ft)		0			0			
Crosswalk Width(ft)		16			16			
Two way Left Turn Lane								
Headway Factor	1.02	1.02	1.02	0.96	0.96	0.97	0.97	0.98
Turning Speed (mph)	15		9	15		15	9	15
Number of Detectors	1	2	1	1	2	1	1	1
Detector Template	Left	Thru	Right	Left	Thru	Left	Right	Left
Leading Detector (ft)	20	100	20	20	100	20	20	20
Trailing Detector (ft)	0	0	0	0	0	0	0	0
Detector 1 Position(ft)	0	0	0	0	0	0	0	0
Detector 1 Size(ft)	20	6	20	20	6	20	20	20
Detector 1 Type	Cl+Ex	Cl+Ex	Cl+Ex	Cl+Ex	Cl+Ex	Cl+Ex	Cl+Ex	Cl+Ex
Detector 1 Channel								
Detector 1 Extend (s)	0.0	0.0	0.0	0.0	0.0	0.0	0.0	0.0
Detector 1 Queue (s)	0.0	0.0	0.0	0.0	0.0	0.0	0.0	0.0
Detector 1 Delay (s)	0.0	0.0	0.0	0.0	0.0	0.0	0.0	0.0
Detector 2 Position(ft)		94			94			
Detector 2 Size(ft)		6			6			
Detector 2 Type		Cl+Ex			Cl+Ex			
Detector 2 Channel								
Detector 2 Extend (s)		0.0			0.0			
Turn Type	Prot	NA	Free	Prot	NA	Prot	Free	Prot

DocuSign Envelope ID: 5C03745C-4B01-4834-A65D-B77F558A4F46

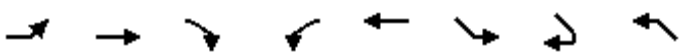

Lane Group	EBL	EBT	EBR2	WBL	WBT	SEL	SER2	NWL
Protected Phases	5	2		1	6	4		8
Permitted Phases			Free				Free	
Detector Phase	5	2		1	6	4		8
Switch Phase								
Minimum Initial (s)	7.0	12.0		7.0	12.0	7.0		7.0
Minimum Split (s)	15.3	21.0		14.5	21.0	15.0		15.0
Total Split (s)	28.0	89.0		43.0	104.0	48.0		48.0
Total Split (%)	15.6%	49.4%		23.9%	57.8%	26.7%		26.7%
Maximum Green (s)	19.7	80.0		35.5	95.0	40.0		40.0
Yellow Time (s)	3.1	5.2		3.6	5.2	3.5		3.5
All-Red Time (s)	5.2	3.8		3.9	3.8	4.5		4.5
Lost Time Adjust (s)	-3.3	-4.0		-2.5	-4.0	-3.0		-3.0
Total Lost Time (s)	5.0	5.0		5.0	5.0	5.0		5.0
Lead/Lag	Lag	Lead		Lag	Lead			
Lead-Lag Optimize?	Yes	Yes		Yes	Yes			
Vehicle Extension (s)	2.0	6.0		2.0	6.0	2.0		2.0
Minimum Gap (s)	0.2	3.0		0.2	3.0	0.2		0.2
Time Before Reduce (s)	0.0	15.0		0.0	15.0	0.0		0.0
Time To Reduce (s)	0.0	30.0		0.0	30.0	0.0		0.0
Recall Mode	None	C-Max		None	C-Max	None		None
Act Effct Green (s)	23.0	84.0	180.0	38.0	99.0	43.0	180.0	43.0
Actuated g/C Ratio	0.13	0.47	1.00	0.21	0.55	0.24	1.00	0.24
v/c Ratio	0.65	0.76	0.15	0.65	0.40	1.62	0.21	0.35
Control Delay	83.3	34.3	0.2	58.4	13.6	324.2	0.3	58.5
Queue Delay	0.0	14.2	0.0	1.9	0.8	9.6	0.0	0.0
Total Delay	83.3	48.5	0.2	60.2	14.4	333.8	0.3	58.5
LOS	F	D	A	E	B	F	A	E
Approach Delay		47.8			30.9			
Approach LOS		D			C			
Queue Length 50th (ft)	154	561	0	258	140	~1155	0	142
Queue Length 95th (ft)	208	647	0	327	151	#1292	0	190
Internal Link Dist (ft)		920			338			
Turn Bay Length (ft)	475							
Base Capacity (vph)	393	1536	1420	683	1976	820	1525	786
Starvation Cap Reductn	0	0	0	117	811	0	0	0
Spillback Cap Reductn	0	378	0	0	0	546	0	0
Storage Cap Reductn	0	0	0	0	0	0	0	0
Reduced v/c Ratio	0.65	1.00	0.15	0.78	0.67	4.84	0.21	0.35

Intersection Summary			
Area Type:	Other		
Cycle Length: 180			
Actuated Cycle Length: 180			
Offset: 0 (0%), Referenced to phase 2:EBT and 6:WBT, Start of Green, Master Intersection			
Natural Cycle: 150			
Control Type: Actuated-Coordinated			
Maximum v/c Ratio: 1.64			
Intersection Signal Delay: 120.3		Intersection LOS: F	
Intersection Capacity Utilization 86.8%		ICU Level of Service E	

DocuSign Envelope ID: 5C03745C-4B01-4834-A65D-B77F558A4F46

Analysis Period (min) 15

~ Volume exceeds capacity, queue is theoretically infinite.
Queue shown is maximum after two cycles.

95th percentile volume exceeds capacity, queue may be longer.
Queue shown is maximum after two cycles.

Splits and Phases: 10: I-26 Ramp & NC 146 (Long Shoals Rd)

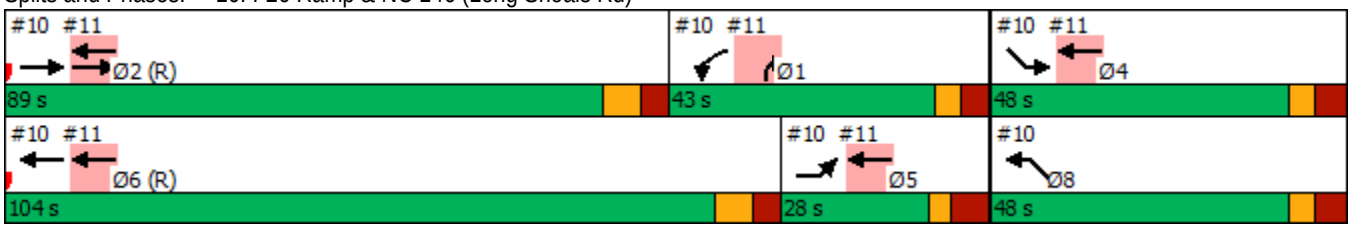

DocuSign Envelope ID: 5C03745C-4B01-4834-A65D-B77F558A4F46

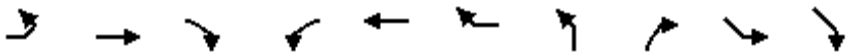

Lane Group	EBL	EBT	EBR	WBL	WBT	WBR	NBL	NBR	SEL	SER	Ø4	Ø5
Lane Configurations		↑↑			↑↑	↱		↱↱				
Traffic Volume (vph)	0	2240	0	0	1105	645	0	795	0	0		
Future Volume (vph)	0	2240	0	0	1105	645	0	795	0	0		
Ideal Flow (vphpl)	1900	1900	1900	1900	1900	1900	1900	1900	1900	1900		
Storage Length (ft)	0		0	0		275	0	0	0	0		
Storage Lanes	0		0	0		1	0	2	0	0		
Taper Length (ft)	25			25			25		25			
Lane Util. Factor	1.00	0.95	1.00	1.00	0.95	1.00	1.00	0.88	1.00	1.00		
Frt						0.850		0.850				
Flt Protected												
Satd. Flow (prot)	0	3471	0	0	3471	1442	0	2733	0	0		
Flt Permitted												
Satd. Flow (perm)	0	3471	0	0	3471	1442	0	2733	0	0		
Right Turn on Red			No			No		No				
Satd. Flow (RTOR)												
Link Speed (mph)		45			45		45		45			
Link Distance (ft)		418			593		396		464			
Travel Time (s)		6.3			9.0		6.0		7.0			
Peak Hour Factor	0.90	0.90	0.90	0.90	0.90	0.90	0.90	0.90	0.90	0.90		
Heavy Vehicles (%)	2%	4%	2%	2%	4%	12%	2%	4%	2%	2%		
Adj. Flow (vph)	0	2489	0	0	1228	717	0	883	0	0		
Shared Lane Traffic (%)												
Lane Group Flow (vph)	0	2489	0	0	1228	717	0	883	0	0		
Enter Blocked Intersection	No	No	No	No	No	No	No	No	No	No		
Lane Alignment	Left	L NA	Right	Left	Right	Right	Left	R NA	Left	Right		
Median Width(ft)		0			24		0		0			
Link Offset(ft)		0			0		0		0			
Crosswalk Width(ft)		16			16		16		16			
Two way Left Turn Lane												
Headway Factor	1.00	1.00	1.00	1.00	1.00	1.00	1.00	1.00	1.00	1.00		
Turning Speed (mph)	15		9	15		9	15	9	15	9		
Number of Detectors		2			2	1		1				
Detector Template		Thru			Thru	Right		Right				
Leading Detector (ft)		100			100	20		20				
Trailing Detector (ft)		0			0	0		0				
Detector 1 Position(ft)		0			0	0		0				
Detector 1 Size(ft)		6			6	20		20				
Detector 1 Type		Cl+Ex			Cl+Ex	Cl+Ex		Cl+Ex				
Detector 1 Channel												
Detector 1 Extend (s)		0.0			0.0	0.0		0.0				
Detector 1 Queue (s)		0.0			0.0	0.0		0.0				
Detector 1 Delay (s)		0.0			0.0	0.0		0.0				
Detector 2 Position(ft)		94			94							
Detector 2 Size(ft)		6			6							
Detector 2 Type		Cl+Ex			Cl+Ex							
Detector 2 Channel												
Detector 2 Extend (s)		0.0			0.0							
Turn Type		NA			NA	Free		Prot				
Protected Phases		2			2 4 5 6			1			4	5

DocuSign Envelope ID: 5C03745C-4B01-4834-A65D-B77F558A4F46

Lane Group	Ø6	Ø8
Lane Configurations		
Traffic Volume (vph)		
Future Volume (vph)		
Ideal Flow (vphpl)		
Storage Length (ft)		
Storage Lanes		
Taper Length (ft)		
Lane Util. Factor		
Frt		
Flt Protected		
Satd. Flow (prot)		
Flt Permitted		
Satd. Flow (perm)		
Right Turn on Red		
Satd. Flow (RTOR)		
Link Speed (mph)		
Link Distance (ft)		
Travel Time (s)		
Peak Hour Factor		
Heavy Vehicles (%)		
Adj. Flow (vph)		
Shared Lane Traffic (%)		
Lane Group Flow (vph)		
Enter Blocked Intersection		
Lane Alignment		
Median Width(ft)		
Link Offset(ft)		
Crosswalk Width(ft)		
Two way Left Turn Lane		
Headway Factor		
Turning Speed (mph)		
Number of Detectors		
Detector Template		
Leading Detector (ft)		
Trailing Detector (ft)		
Detector 1 Position(ft)		
Detector 1 Size(ft)		
Detector 1 Type		
Detector 1 Channel		
Detector 1 Extend (s)		
Detector 1 Queue (s)		
Detector 1 Delay (s)		
Detector 2 Position(ft)		
Detector 2 Size(ft)		
Detector 2 Type		
Detector 2 Channel		
Detector 2 Extend (s)		
Turn Type		
Protected Phases	6	8

DocuSign Envelope ID: 5C03745C-4B01-4834-A65D-B77F558A4F46

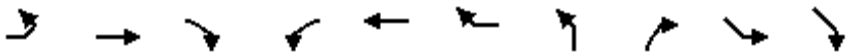

Lane Group	EBL	EBT	EBR	WBL	WBT	WBR	NBL	NBR	SEL	SER	Ø4	Ø5
Permitted Phases						Free						
Detector Phase		2			2 4 5 6			1				
Switch Phase												
Minimum Initial (s)		12.0						7.0			7.0	7.0
Minimum Split (s)		21.0						14.5			15.0	15.3
Total Split (s)		89.0						43.0			48.0	28.0
Total Split (%)		49.4%						23.9%			27%	16%
Maximum Green (s)		80.0						35.5			40.0	19.7
Yellow Time (s)		5.2						3.6			3.5	3.1
All-Red Time (s)		3.8						3.9			4.5	5.2
Lost Time Adjust (s)		0.0						0.0				
Total Lost Time (s)		9.0						7.5				
Lead/Lag		Lead						Lag				Lag
Lead-Lag Optimize?		Yes						Yes				Yes
Vehicle Extension (s)		6.0						2.0			2.0	2.0
Minimum Gap (s)		3.0						0.2			0.2	0.2
Time Before Reduce (s)		15.0						0.0			0.0	0.0
Time To Reduce (s)		30.0						0.0			0.0	0.0
Recall Mode		C-Max						None			None	None
Act Effct Green (s)		80.0			180.0	180.0		35.5				
Actuated g/C Ratio		0.44			1.00	1.00		0.20				
v/c Ratio		1.61			0.35	0.50		1.64				
Control Delay		304.8			0.1	0.9		336.7				
Queue Delay		0.8			0.0	0.0		6.5				
Total Delay		305.6			0.1	0.9		343.2				
LOS		F			A	A		F				
Approach Delay		305.6			0.4		343.2					
Approach LOS		F			A		F					
Queue Length 50th (ft)		~2240			0	0		~852				
Queue Length 95th (ft)		m#1628			m0	m0		#1003				
Internal Link Dist (ft)		338			513		316		384			
Turn Bay Length (ft)						275						
Base Capacity (vph)		1542			3471	1442		539				
Starvation Cap Reductn		67			0	0		0				
Spillback Cap Reductn		289			41	0		258				
Storage Cap Reductn		0			0	0		0				
Reduced v/c Ratio		1.99			0.36	0.50		3.14				

Intersection Summary			
Area Type:	Other		
Cycle Length: 180			
Actuated Cycle Length: 180			
Offset: 0 (0%), Referenced to phase 2:EBT and 6:WBT, Start of Green, Master Intersection			
Natural Cycle: 150			
Control Type: Actuated-Coordinated			
Maximum v/c Ratio: 1.64			
Intersection Signal Delay: 200.2		Intersection LOS: F	
Intersection Capacity Utilization 103.5%		ICU Level of Service G	
Analysis Period (min) 15			

DocuSign Envelope ID: 5C03745C-4B01-4834-A65D-B77F558A4F46

Lane Group	Ø6	Ø8
Permitted Phases		
Detector Phase		
Switch Phase		
Minimum Initial (s)	12.0	7.0
Minimum Split (s)	21.0	15.0
Total Split (s)	104.0	48.0
Total Split (%)	58%	27%
Maximum Green (s)	95.0	40.0
Yellow Time (s)	5.2	3.5
All-Red Time (s)	3.8	4.5
Lost Time Adjust (s)		
Total Lost Time (s)		
Lead/Lag	Lead	
Lead-Lag Optimize?	Yes	
Vehicle Extension (s)	6.0	2.0
Minimum Gap (s)	3.0	0.2
Time Before Reduce (s)	15.0	0.0
Time To Reduce (s)	30.0	0.0
Recall Mode	C-Max	None
Act Effct Green (s)		
Actuated g/C Ratio		
v/c Ratio		
Control Delay		
Queue Delay		
Total Delay		
LOS		
Approach Delay		
Approach LOS		
Queue Length 50th (ft)		
Queue Length 95th (ft)		
Internal Link Dist (ft)		
Turn Bay Length (ft)		
Base Capacity (vph)		
Starvation Cap Reductn		
Spillback Cap Reductn		
Storage Cap Reductn		
Reduced v/c Ratio		

Intersection Summary

DocuSign Envelope ID: 5C03745C-4B01-4834-A65D-B77F558A4F46

~ Volume exceeds capacity, queue is theoretically infinite.
Queue shown is maximum after two cycles.
95th percentile volume exceeds capacity, queue may be longer.
Queue shown is maximum after two cycles.
m Volume for 95th percentile queue is metered by upstream signal.

Splits and Phases: 11: I-26 NWB Ramp & NC 146 (Long Shoals Rd)

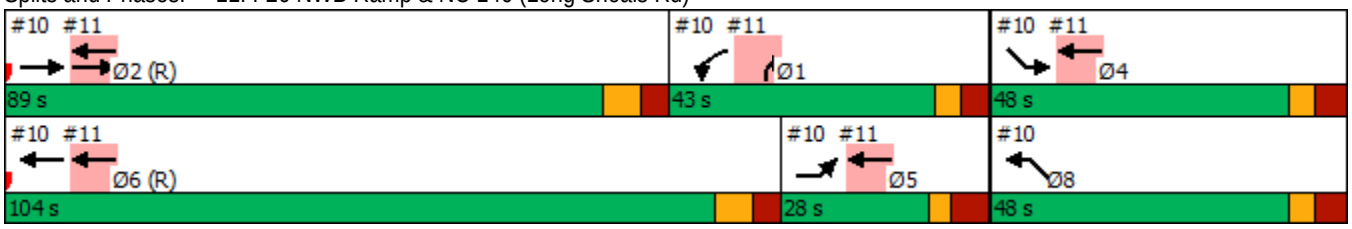

DocuSign Envelope ID: 5C03745C-4B01-4834-A65D-B77F558A4F46

Lane Group	EBL	EBT	EBR	WBL	WBT	WBR	NBL	NBT	NBR	SBL	SBT	SBR
Lane Configurations												
Traffic Volume (vph)	856	2037	142	26	1223	391	51	27	15	357	43	476
Future Volume (vph)	856	2037	142	26	1223	391	51	27	15	357	43	476
Ideal Flow (vphpl)	1900	1900	1900	1900	1900	1900	1900	1900	1900	1900	1900	1900
Grade (%)		6%			-6%			11%			7%	
Storage Length (ft)	350		400	250		225	0		0	450		0
Storage Lanes	2		1	1		1	0		0	1		1
Taper Length (ft)	25			25			25			25		
Lane Util. Factor	0.97	0.95	1.00	1.00	0.95	1.00	1.00	1.00	1.00	0.95	0.95	1.00
Frt			0.850			0.850		0.978				0.850
Flt Protected	0.950			0.950				0.973		0.950	0.962	
Satd. Flow (prot)	3266	3367	1506	1788	3575	1599	0	1627	0	1561	1581	1470
Flt Permitted	0.950			0.950				0.973		0.950	0.962	
Satd. Flow (perm)	3266	3367	1506	1788	3575	1599	0	1627	0	1561	1581	1470
Right Turn on Red			No			No			No			No
Satd. Flow (RTOR)												
Link Speed (mph)		45			45			25			25	
Link Distance (ft)		593			1582			722			992	
Travel Time (s)		9.0			24.0			19.7			27.1	
Peak Hour Factor	0.90	0.90	0.90	0.90	0.90	0.90	0.90	0.90	0.90	0.90	0.90	0.90
Heavy Vehicles (%)	4%	4%	4%	4%	4%	4%	5%	5%	5%	6%	6%	6%
Adj. Flow (vph)	951	2263	158	29	1359	434	57	30	17	397	48	529
Shared Lane Traffic (%)										44%		
Lane Group Flow (vph)	951	2263	158	29	1359	434	0	104	0	222	223	529
Enter Blocked Intersection	No	No	No	No	No	No	No	No	No	No	No	No
Lane Alignment	Left	Left	Right	Left	Left	Right	Left	Left	Right	Left	Left	Right
Median Width(ft)		24			24			0			12	
Link Offset(ft)		0			0			0			0	
Crosswalk Width(ft)		16			16			16			16	
Two way Left Turn Lane												
Headway Factor	1.04	1.04	1.04	0.96	0.96	0.96	1.08	1.08	1.08	1.05	1.05	1.05
Turning Speed (mph)	15		9	15		9	15		9	15		9
Number of Detectors	1	2	1	1	2	1	1	2		1	2	1
Detector Template	Left	Thru	Right	Left	Thru	Right	Left	Thru		Left	Thru	Right
Leading Detector (ft)	20	100	20	20	100	20	20	100		20	100	20
Trailing Detector (ft)	0	0	0	0	0	0	0	0		0	0	0
Detector 1 Position(ft)	0	0	0	0	0	0	0	0		0	0	0
Detector 1 Size(ft)	20	6	20	20	6	20	20	6		20	6	20
Detector 1 Type	Cl+Ex	Cl+Ex	Cl+Ex	Cl+Ex	Cl+Ex	Cl+Ex	Cl+Ex	Cl+Ex		Cl+Ex	Cl+Ex	Cl+Ex
Detector 1 Channel												
Detector 1 Extend (s)	0.0	0.0	0.0	0.0	0.0	0.0	0.0	0.0		0.0	0.0	0.0
Detector 1 Queue (s)	0.0	0.0	0.0	0.0	0.0	0.0	0.0	0.0		0.0	0.0	0.0
Detector 1 Delay (s)	0.0	0.0	0.0	0.0	0.0	0.0	0.0	0.0		0.0	0.0	0.0
Detector 2 Position(ft)		94			94			94			94	
Detector 2 Size(ft)		6			6			6			6	
Detector 2 Type		Cl+Ex			Cl+Ex			Cl+Ex			Cl+Ex	
Detector 2 Channel												
Detector 2 Extend (s)		0.0			0.0			0.0			0.0	
Turn Type	Prot	NA	pm+ov	Prot	NA	pm+ov	Split	NA		Split	NA	pm+ov

DocuSign Envelope ID: 5C03745C-4B01-4834-A65D-B77F558A4F46

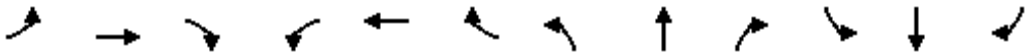

Lane Group	EBL	EBT	EBR	WBL	WBT	WBR	NBL	NBT	NBR	SBL	SBT	SBR
Protected Phases	5	2	4	1	6	3	4	4		3	3	5
Permitted Phases			2			6						3
Detector Phase	5	2	4	1	6	3	4	4		3	3	5
Switch Phase												
Minimum Initial (s)	7.0	12.0	7.0	7.0	12.0	7.0	7.0	7.0		7.0	7.0	7.0
Minimum Split (s)	13.3	20.7	39.3	13.3	32.6	13.4	39.3	39.3		13.4	13.4	13.3
Total Split (s)	58.0	120.0	16.0	14.0	76.0	30.0	16.0	16.0		30.0	30.0	58.0
Total Split (%)	32.2%	66.7%	8.9%	7.8%	42.2%	16.7%	8.9%	8.9%		16.7%	16.7%	32.2%
Maximum Green (s)	51.7	114.3	9.7	7.7	69.4	23.6	9.7	9.7		23.6	23.6	51.7
Yellow Time (s)	3.0	4.1	3.0	3.1	5.1	3.0	3.0	3.0		3.0	3.0	3.0
All-Red Time (s)	3.3	1.6	3.3	3.2	1.5	3.4	3.3	3.3		3.4	3.4	3.3
Lost Time Adjust (s)	-1.3	-0.7	-1.3	-1.3	-1.6	-1.4		-1.3		-1.4	-1.4	-1.3
Total Lost Time (s)	5.0	5.0	5.0	5.0	5.0	5.0		5.0		5.0	5.0	5.0
Lead/Lag	Lag	Lag	Lead	Lead	Lead	Lag	Lead	Lead		Lag	Lag	Lag
Lead-Lag Optimize?	Yes	Yes	Yes	Yes	Yes	Yes	Yes	Yes		Yes	Yes	Yes
Vehicle Extension (s)	3.0	6.0	3.0	2.0	6.0	3.0	3.0	3.0		3.0	3.0	3.0
Minimum Gap (s)	0.2	3.0	0.2	0.2	3.0	0.2	0.2	0.2		0.2	0.2	0.2
Time Before Reduce (s)	0.0	20.0	0.0	0.0	20.0	0.0	0.0	0.0		0.0	0.0	0.0
Time To Reduce (s)	0.0	30.0	0.0	0.0	30.0	0.0	0.0	0.0		0.0	0.0	0.0
Recall Mode	None	C-Max	None	None	C-Max	None	None	None		None	None	None
Walk Time (s)		7.0	7.0		7.0		7.0	7.0				
Flash Dont Walk (s)		8.0	26.0		19.0		26.0	26.0				
Pedestrian Calls (#/hr)		0	0		0		0	0				
Act Effct Green (s)	53.0	118.0	134.0	8.6	71.0	101.0		11.0		25.0	25.0	78.0
Actuated g/C Ratio	0.29	0.66	0.74	0.05	0.39	0.56		0.06		0.14	0.14	0.43
v/c Ratio	0.99	1.03	0.14	0.34	0.96	0.48		1.05		1.03	1.02	0.83
Control Delay	47.0	24.5	0.4	93.9	69.5	26.1		180.4		141.1	138.8	43.7
Queue Delay	37.6	30.7	0.0	0.0	0.0	0.0		0.0		0.0	0.0	0.0
Total Delay	84.5	55.2	0.4	93.9	69.5	26.1		180.4		141.1	138.8	43.7
LOS	F	E	A	F	E	C		F		F	F	D
Approach Delay		60.9			59.6			180.4			87.7	
Approach LOS		E			E			F			F	
Queue Length 50th (ft)	564	~1514	6	34	825	302		~133		~292	~291	431
Queue Length 95th (ft)	m280	m92	m4	74	#980	400		#272		#490	#489	572
Internal Link Dist (ft)		513			1502			642			912	
Turn Bay Length (ft)	350		400	250		225				450		
Base Capacity (vph)	961	2207	1121	89	1410	897		99		216	219	637
Starvation Cap Reductn	123	637	0	0	0	0		0		0	0	0
Spillback Cap Reductn	0	0	0	0	0	0		0		0	0	0
Storage Cap Reductn	0	0	0	0	0	0		0		0	0	0
Reduced v/c Ratio	1.13	1.44	0.14	0.33	0.96	0.48		1.05		1.03	1.02	0.83

Intersection Summary	
Area Type:	Other
Cycle Length: 180	
Actuated Cycle Length: 180	
Offset: 18 (10%), Referenced to phase 2:EBT and 6:WBT, Start of Green	
Natural Cycle: 150	
Control Type: Actuated-Coordinated	

DocuSign Envelope ID: 5C03745C-4B01-4834-A65D-B77F558A4F46

Maximum v/c Ratio: 1.05	
Intersection Signal Delay: 66.7	Intersection LOS: E
Intersection Capacity Utilization 91.5%	ICU Level of Service F
Analysis Period (min) 15	

~ Volume exceeds capacity, queue is theoretically infinite.
Queue shown is maximum after two cycles.

95th percentile volume exceeds capacity, queue may be longer.
Queue shown is maximum after two cycles.

m Volume for 95th percentile queue is metered by upstream signal.

Splits and Phases: 12: Skyland Inn Dr/Schenck Pkwy & NC 146 (Long Shoals Rd)

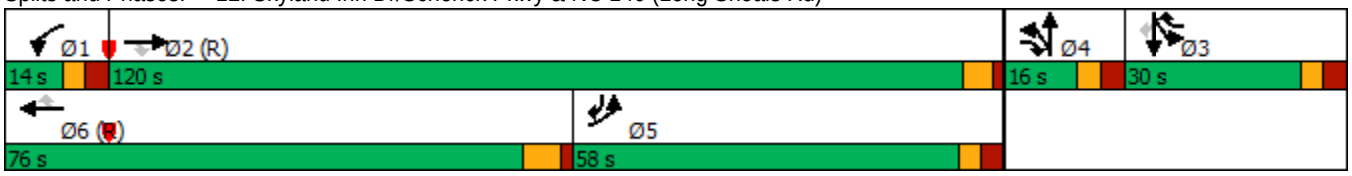

DocuSign Envelope ID: 5C03745C-4B01-4834-A65D-B77F558A4F46

2045 Build - Scenario 1 - PM

DocuSign Envelope ID: 5C03745C-4B01-4834-A65D-B77F558A4F46

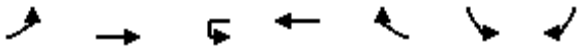

Lane Group	EBL	EBT	WBU	WBT	WBR	SBL	SBR
Lane Configurations							
Traffic Volume (vph)	94	1464	0	1180	106	106	76
Future Volume (vph)	94	1464	0	1180	106	106	76
Ideal Flow (vphpl)	1900	1900	1900	1900	1900	1900	1900
Storage Length (ft)	150		150		175	0	175
Storage Lanes	1		1		1	1	1
Taper Length (ft)	25		25			25	
Lane Util. Factor	1.00	0.95	1.00	0.95	1.00	1.00	1.00
Frt					0.850		0.850
Flt Protected	0.950					0.950	
Satd. Flow (prot)	1703	3406	1792	3406	1524	1703	1524
Flt Permitted	0.950					0.950	
Satd. Flow (perm)	1703	3406	1792	3406	1524	1703	1524
Right Turn on Red					No		No
Satd. Flow (RTOR)							
Link Speed (mph)		45		45		25	
Link Distance (ft)		1606		558		1108	
Travel Time (s)		24.3		8.5		30.2	
Peak Hour Factor	0.90	0.90	0.90	0.90	0.90	0.90	0.90
Heavy Vehicles (%)	6%	6%	6%	6%	6%	6%	6%
Adj. Flow (vph)	104	1627	0	1311	118	118	84
Shared Lane Traffic (%)							
Lane Group Flow (vph)	104	1627	0	1311	118	118	84
Enter Blocked Intersection	No	No	No	No	No	No	No
Lane Alignment	Left	Left	R NA	Left	Right	Left	Right
Median Width(ft)		12		12		12	
Link Offset(ft)		0		0		0	
Crosswalk Width(ft)		16		16		16	
Two way Left Turn Lane							
Headway Factor	1.00	1.00	1.00	1.00	1.00	1.00	1.00
Turning Speed (mph)	15		9		9	15	9
Number of Detectors	1	2	1	2	1	1	1
Detector Template	Left	Thru	Left	Thru	Right	Left	Right
Leading Detector (ft)	20	100	20	100	20	20	20
Trailing Detector (ft)	0	0	0	0	0	0	0
Detector 1 Position(ft)	0	0	0	0	0	0	0
Detector 1 Size(ft)	20	6	20	6	20	20	20
Detector 1 Type	Cl+Ex	Cl+Ex	Cl+Ex	Cl+Ex	Cl+Ex	Cl+Ex	Cl+Ex
Detector 1 Channel							
Detector 1 Extend (s)	0.0	0.0	0.0	0.0	0.0	0.0	0.0
Detector 1 Queue (s)	0.0	0.0	0.0	0.0	0.0	0.0	0.0
Detector 1 Delay (s)	0.0	0.0	0.0	0.0	0.0	0.0	0.0
Detector 2 Position(ft)		94		94			
Detector 2 Size(ft)		6		6			
Detector 2 Type		Cl+Ex		Cl+Ex			
Detector 2 Channel							
Detector 2 Extend (s)		0.0		0.0			
Turn Type	Prot	NA	Prot	NA	pm+ov	Prot	pm+ov
Protected Phases	5	2	1	6	4	4	5

DocuSign Envelope ID: 5C03745C-4B01-4834-A65D-B77F558A4F46

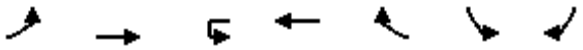

Lane Group	EBL	EBT	WBU	WBT	WBR	SBL	SBR
Permitted Phases					6		4
Detector Phase	5	2	1	6	4	4	5
Switch Phase							
Minimum Initial (s)	7.0	12.0	7.0	12.0	7.0	7.0	7.0
Minimum Split (s)	13.1	18.8	11.9	35.8	36.5	36.5	13.1
Total Split (s)	17.0	71.0	12.0	66.0	37.0	37.0	17.0
Total Split (%)	14.2%	59.2%	10.0%	55.0%	30.8%	30.8%	14.2%
Maximum Green (s)	10.9	64.2	7.1	59.2	30.5	30.5	10.9
Yellow Time (s)	3.0	4.9	3.0	4.9	3.0	3.0	3.0
All-Red Time (s)	3.1	1.9	1.9	1.9	3.5	3.5	3.1
Lost Time Adjust (s)	-1.1	-1.8	0.1	-1.8	-1.8	-1.5	-1.1
Total Lost Time (s)	5.0	5.0	5.0	5.0	4.7	5.0	5.0
Lead/Lag	Lag	Lag	Lead	Lead			Lag
Lead-Lag Optimize?	Yes	Yes	Yes	Yes			Yes
Vehicle Extension (s)	2.0	6.0	2.0	6.0	2.0	2.0	2.0
Minimum Gap (s)	0.2	3.0	0.2	3.0	0.2	0.2	0.2
Time Before Reduce (s)	0.0	15.0	0.0	15.0	0.0	0.0	0.0
Time To Reduce (s)	0.0	30.0	0.0	30.0	0.0	0.0	0.0
Recall Mode	None	C-Max	None	C-Max	None	None	None
Walk Time (s)				7.0	7.0	7.0	
Flash Dont Walk (s)				22.0	23.0	23.0	
Pedestrian Calls (#/hr)				0	0	0	
Act Effct Green (s)	12.0	95.8		78.8	98.3	14.2	31.2
Actuated g/C Ratio	0.10	0.80		0.66	0.82	0.12	0.26
v/c Ratio	0.61	0.60		0.59	0.09	0.59	0.21
Control Delay	67.9	6.2		10.4	1.3	61.2	35.0
Queue Delay	0.0	0.1		0.2	0.0	0.0	0.0
Total Delay	67.9	6.3		10.6	1.3	61.2	35.0
LOS	E	A		B	A	E	D
Approach Delay		10.0		9.9		50.3	
Approach LOS		B		A		D	
Queue Length 50th (ft)	78	207		265	8	88	51
Queue Length 95th (ft)	#146	326		307	m12	144	90
Internal Link Dist (ft)		1526		478		1028	
Turn Bay Length (ft)	150				175		175
Base Capacity (vph)	170	2718		2236	1248	454	396
Starvation Cap Reductn	0	0		271	0	0	0
Spillback Cap Reductn	0	244		0	0	0	0
Storage Cap Reductn	0	0		0	0	0	0
Reduced v/c Ratio	0.61	0.66		0.67	0.09	0.26	0.21

Intersection Summary	
Area Type:	Other
Cycle Length: 120	
Actuated Cycle Length: 120	
Offset: 111 (93%), Referenced to phase 2:EBT and 6:WBT, Start of Green	
Natural Cycle: 100	
Control Type: Actuated-Coordinated	
Maximum v/c Ratio: 0.61	

DocuSign Envelope ID: 5C03745C-4B01-4834-A65D-B77F558A4F46

Intersection Signal Delay: 12.4	Intersection LOS: B
Intersection Capacity Utilization 64.7%	ICU Level of Service C
Analysis Period (min) 15	

\# 95th percentile volume exceeds capacity, queue may be longer.
Queue shown is maximum after two cycles.
m Volume for 95th percentile queue is metered by upstream signal.

Splits and Phases: 1: NC 191 (Brevard Rd) & Commercial Access

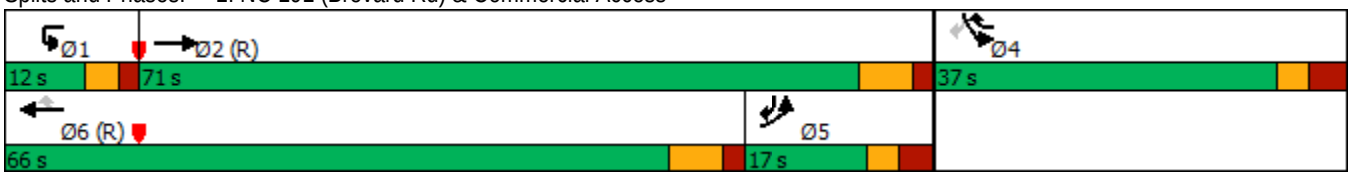

DocuSign Envelope ID: 5C03745C-4B01-4834-A65D-B77F558A4F46

Lane Group	EBT	EBR	WBL	WBT	NBL	NBR
Lane Configurations						
Traffic Volume (vph)	1329	241	321	973	313	66
Future Volume (vph)	1329	241	321	973	313	66
Ideal Flow (vphpl)	1900	1900	1900	1900	1900	1900
Grade (%)	-1%			-1%	0%	
Storage Length (ft)		225	200		0	0
Storage Lanes		1	1		2	1
Taper Length (ft)			25		25	
Lane Util. Factor	0.95	1.00	1.00	0.95	0.97	1.00
Frt		0.850				0.850
Flt Protected			0.950		0.950	
Satd. Flow (prot)	3423	1449	1620	3423	3303	1524
Flt Permitted			0.950		0.950	
Satd. Flow (perm)	3423	1449	1620	3423	3303	1524
Right Turn on Red		No				Yes
Satd. Flow (RTOR)						16
Link Speed (mph)	45			45	45	
Link Distance (ft)	558			1204	323	
Travel Time (s)	8.5			18.2	4.9	
Peak Hour Factor	0.90	0.90	0.90	0.90	0.90	0.90
Heavy Vehicles (%)	6%	12%	12%	6%	6%	6%
Adj. Flow (vph)	1477	268	357	1081	348	73
Shared Lane Traffic (%)						
Lane Group Flow (vph)	1477	268	357	1081	348	73
Enter Blocked Intersection	No	No	No	No	No	No
Lane Alignment	Left	Right	Left	Left	Left	Right
Median Width(ft)	12			12	40	
Link Offset(ft)	0			0	0	
Crosswalk Width(ft)	16			16	16	
Two way Left Turn Lane						
Headway Factor	0.99	0.99	0.99	0.99	1.00	1.00
Turning Speed (mph)		9	15		15	9
Number of Detectors	2	1	1	2	1	1
Detector Template	Thru	Right	Left	Thru	Left	Right
Leading Detector (ft)	100	20	20	100	20	20
Trailing Detector (ft)	0	0	0	0	0	0
Detector 1 Position(ft)	0	0	0	0	0	0
Detector 1 Size(ft)	6	20	20	6	20	20
Detector 1 Type	Cl+Ex	Cl+Ex	Cl+Ex	Cl+Ex	Cl+Ex	Cl+Ex
Detector 1 Channel						
Detector 1 Extend (s)	0.0	0.0	0.0	0.0	0.0	0.0
Detector 1 Queue (s)	0.0	0.0	0.0	0.0	0.0	0.0
Detector 1 Delay (s)	0.0	0.0	0.0	0.0	0.0	0.0
Detector 2 Position(ft)	94			94		
Detector 2 Size(ft)	6			6		
Detector 2 Type	Cl+Ex			Cl+Ex		
Detector 2 Channel						
Detector 2 Extend (s)	0.0			0.0		
Turn Type	NA	pm+ov	Prot	NA	Prot	pm+ov

DocuSign Envelope ID: 5C03745C-4B01-4834-A65D-B77F558A4F46



Lane Group	EBT	EBR	WBL	WBT	NBL	NBR
Protected Phases	2	4	1	6	4	1
Permitted Phases		2				4
Detector Phase	2	4	1	6	4	1
Switch Phase						
Minimum Initial (s)	12.0	7.0	10.0	12.0	7.0	10.0
Minimum Split (s)	18.0	13.9	16.3	18.6	13.9	16.3
Total Split (s)	62.0	21.0	37.0	99.0	21.0	37.0
Total Split (%)	51.7%	17.5%	30.8%	82.5%	17.5%	30.8%
Maximum Green (s)	56.0	14.1	30.7	92.4	14.1	30.7
Yellow Time (s)	4.4	3.0	3.0	4.7	3.0	3.0
All-Red Time (s)	1.6	3.9	3.3	1.9	3.9	3.3
Lost Time Adjust (s)	-1.0	-1.9	-1.3	-1.6	-1.9	-1.9
Total Lost Time (s)	5.0	5.0	5.0	5.0	5.0	4.4
Lead/Lag	Lead		Lag			Lag
Lead-Lag Optimize?	Yes		Yes			Yes
Vehicle Extension (s)	6.0	5.0	2.5	6.0	5.0	2.5
Minimum Gap (s)	3.0	0.2	0.2	3.0	0.2	0.2
Time Before Reduce (s)	15.0	0.0	0.0	15.0	0.0	0.0
Time To Reduce (s)	30.0	0.0	0.0	30.0	0.0	0.0
Recall Mode	C-Max	None	None	C-Max	None	None
Act Effct Green (s)	57.0	78.0	32.0	94.0	16.0	53.6
Actuated g/C Ratio	0.48	0.65	0.27	0.78	0.13	0.45
v/c Ratio	0.91	0.28	0.83	0.40	0.79	0.11
Control Delay	32.5	9.1	35.7	3.7	64.3	15.7
Queue Delay	2.5	0.0	0.0	0.0	0.0	0.0
Total Delay	35.0	9.1	35.7	3.7	64.3	15.7
LOS	C	A	D	A	E	B
Approach Delay	31.0			11.6	55.9	
Approach LOS	C			B	E	
Queue Length 50th (ft)	554	76	272	78	136	25
Queue Length 95th (ft)	#516	115	#425	90	#202	54
Internal Link Dist (ft)	478			1124	243	
Turn Bay Length (ft)		225	200			
Base Capacity (vph)	1625	941	432	2681	440	689
Starvation Cap Reductn	75	0	0	0	0	0
Spillback Cap Reductn	0	0	0	0	0	0
Storage Cap Reductn	0	0	0	0	0	0
Reduced v/c Ratio	0.95	0.28	0.83	0.40	0.79	0.11

Intersection Summary			
Area Type:	Other		
Cycle Length: 120			
Actuated Cycle Length: 120			
Offset: 77 (64%), Referenced to phase 2:EBT and 6:WBT, Start of Green			
Natural Cycle: 90			
Control Type: Actuated-Coordinated			
Maximum v/c Ratio: 0.91			
Intersection Signal Delay: 26.2		Intersection LOS: C	
Intersection Capacity Utilization 76.0%		ICU Level of Service D	

DocuSign Envelope ID: 5C03745C-4B01-4834-A65D-B77F558A4F46

Analysis Period (min) 15

\# 95th percentile volume exceeds capacity, queue may be longer.

Queue shown is maximum after two cycles.

Splits and Phases: 2: I-26 SEB Ramps & NC 191 (Brevard Rd)

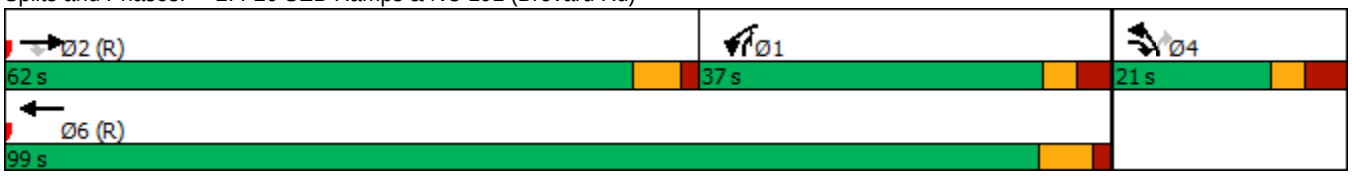

DocuSign Envelope ID: 5C03745C-4B01-4834-A65D-B77F558A4F46

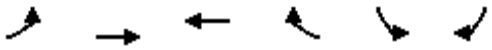

Lane Group	EBL	EBT	WBT	WBR	SBL	SBR
Lane Configurations						
Traffic Volume (vph)	336	1059	1092	55	345	202
Future Volume (vph)	336	1059	1092	55	345	202
Ideal Flow (vphpl)	1900	1900	1900	1900	1900	1900
Grade (%)		2%	-2%		2%	
Storage Length (ft)	625			200	0	400
Storage Lanes	2			1	2	1
Taper Length (ft)	25				25	
Lane Util. Factor	0.97	0.95	0.95	1.00	0.97	1.00
Frt				0.850		0.850
Flt Protected	0.950				0.950	
Satd. Flow (prot)	3095	3340	3408	1456	3240	1494
Flt Permitted	0.950				0.950	
Satd. Flow (perm)	3095	3340	3408	1456	3240	1494
Right Turn on Red				No		No
Satd. Flow (RTOR)						
Link Speed (mph)		45	45		45	
Link Distance (ft)		802	1565		860	
Travel Time (s)		12.2	23.7		13.0	
Peak Hour Factor	0.90	0.90	0.90	0.90	0.90	0.90
Heavy Vehicles (%)	12%	7%	7%	12%	7%	7%
Adj. Flow (vph)	373	1177	1213	61	383	224
Shared Lane Traffic (%)						
Lane Group Flow (vph)	373	1177	1213	61	383	224
Enter Blocked Intersection	No	No	No	No	No	No
Lane Alignment	Left	Left	Left	Right	Left	Right
Median Width(ft)		24	12		36	
Link Offset(ft)		0	0		0	
Crosswalk Width(ft)		16	16		16	
Two way Left Turn Lane						
Headway Factor	1.01	1.01	0.99	0.99	1.01	1.01
Turning Speed (mph)	15			9	15	9
Number of Detectors	1	2	2	1	1	1
Detector Template	Left	Thru	Thru	Right	Left	Right
Leading Detector (ft)	20	100	100	20	20	20
Trailing Detector (ft)	0	0	0	0	0	0
Detector 1 Position(ft)	0	0	0	0	0	0
Detector 1 Size(ft)	20	6	6	20	20	20
Detector 1 Type	Cl+Ex	Cl+Ex	Cl+Ex	Cl+Ex	Cl+Ex	Cl+Ex
Detector 1 Channel						
Detector 1 Extend (s)	0.0	0.0	0.0	0.0	0.0	0.0
Detector 1 Queue (s)	0.0	0.0	0.0	0.0	0.0	0.0
Detector 1 Delay (s)	0.0	0.0	0.0	0.0	0.0	0.0
Detector 2 Position(ft)		94	94			
Detector 2 Size(ft)		6	6			
Detector 2 Type		Cl+Ex	Cl+Ex			
Detector 2 Channel						
Detector 2 Extend (s)		0.0	0.0			
Turn Type	Prot	NA	NA	pm+ov	Prot	pm+ov

DocuSign Envelope ID: 5C03745C-4B01-4834-A65D-B77F558A4F46

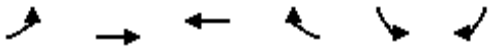

Lane Group	EBL	EBT	WBT	WBR	SBL	SBR
Protected Phases	5	2	6	4	4	5
Permitted Phases				6		4
Detector Phase	5	2	6	4	4	5
Switch Phase						
Minimum Initial (s)	7.0	12.0	12.0	7.0	7.0	7.0
Minimum Split (s)	14.0	19.0	25.0	25.0	25.0	14.0
Total Split (s)	28.0	93.0	65.0	27.0	27.0	28.0
Total Split (%)	23.3%	77.5%	54.2%	22.5%	22.5%	23.3%
Maximum Green (s)	21.0	86.0	58.0	20.0	20.0	21.0
Yellow Time (s)	5.0	5.0	5.0	5.0	5.0	5.0
All-Red Time (s)	2.0	2.0	2.0	2.0	2.0	2.0
Lost Time Adjust (s)	-2.0	-2.0	-2.0	-2.0	-2.0	-2.0
Total Lost Time (s)	5.0	5.0	5.0	5.0	5.0	5.0
Lead/Lag	Lag		Lead			Lag
Lead-Lag Optimize?	Yes		Yes			Yes
Vehicle Extension (s)	3.0	3.0	3.0	3.0	3.0	3.0
Minimum Gap (s)	0.2	3.0	3.0	0.2	0.2	0.2
Time Before Reduce (s)	0.0	15.0	15.0	0.0	0.0	0.0
Time To Reduce (s)	0.0	30.0	30.0	0.0	0.0	0.0
Recall Mode	None	C-Max	C-Max	None	None	None
Walk Time (s)			7.0	7.0	7.0	
Flash Dont Walk (s)			11.0	11.0	11.0	
Pedestrian Calls (#/hr)			0	0	0	
Act Effct Green (s)	23.0	89.8	61.8	87.0	20.2	48.2
Actuated g/C Ratio	0.19	0.75	0.52	0.72	0.17	0.40
v/c Ratio	0.63	0.47	0.69	0.06	0.70	0.37
Control Delay	18.2	1.1	24.9	4.9	54.4	27.1
Queue Delay	0.0	0.0	0.0	0.0	0.0	0.0
Total Delay	18.2	1.1	24.9	4.9	54.4	27.1
LOS	B	A	C	A	D	C
Approach Delay		5.2	23.9		44.3	
Approach LOS		A	C		D	
Queue Length 50th (ft)	122	20	366	12	144	118
Queue Length 95th (ft)	m123	m24	454	24	196	183
Internal Link Dist (ft)		722	1485		780	
Turn Bay Length (ft)	625			200		400
Base Capacity (vph)	593	2499	1755	1039	594	599
Starvation Cap Reductn	0	0	0	0	0	0
Spillback Cap Reductn	0	0	0	0	0	0
Storage Cap Reductn	0	0	0	0	0	0
Reduced v/c Ratio	0.63	0.47	0.69	0.06	0.64	0.37

Intersection Summary	
Area Type:	Other
Cycle Length: 120	
Actuated Cycle Length: 120	
Offset: 77 (64%), Referenced to phase 2:EBT and 6:WBT, Start of Green	
Natural Cycle: 75	
Control Type: Actuated-Coordinated	

DocuSign Envelope ID: 5C03745C-4B01-4834-A65D-B77F558A4F46

Maximum v/c Ratio: 0.70	
Intersection Signal Delay: 19.1	Intersection LOS: B
Intersection Capacity Utilization 62.1%	ICU Level of Service B
Analysis Period (min) 15	

m Volume for 95th percentile queue is metered by upstream signal.

Splits and Phases: 3: NC 191 (Brevard Rd) & I-26 NWB Ramps

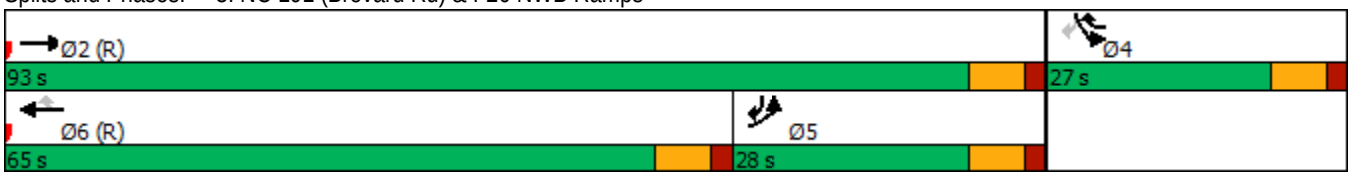

DocuSign Envelope ID: 5C03745C-4B01-4834-A65D-B77F558A4F46

Intersection	
Int Delay, s/veh	2.6

Movement	EBL	EBR	NBL	NBT	SBT	SBR
Lane Configurations						
Traffic Vol, veh/h	94	17	14	247	193	56
Future Vol, veh/h	94	17	14	247	193	56
Conflicting Peds, #/hr	0	0	0	0	0	0
Sign Control	Stop	Stop	Free	Free	Free	Free
RT Channelized	-	None	-	None	-	None
Storage Length	75	0	275	-	-	-
Veh in Median Storage, #	0	-	-	0	0	-
Grade, %	0	-	-	0	3	-
Peak Hour Factor	90	90	90	90	90	90
Heavy Vehicles, %	2	2	2	2	2	2
Mvmt Flow	104	19	16	274	214	62

Major/Minor	Minor2		Major1		Major2	
Conflicting Flow All	551	245	276	0	-	0
Stage 1	245	-	-	-	-	-
Stage 2	306	-	-	-	-	-
Critical Hdwy	6.42	6.22	4.12	-	-	-
Critical Hdwy Stg 1	5.42	-	-	-	-	-
Critical Hdwy Stg 2	5.42	-	-	-	-	-
Follow-up Hdwy	3.518	3.318	2.218	-	-	-
Pot Cap-1 Maneuver	495	794	1287	-	-	-
Stage 1	796	-	-	-	-	-
Stage 2	747	-	-	-	-	-
Platoon blocked, %				-	-	-
Mov Cap-1 Maneuver	489	794	1287	-	-	-
Mov Cap-2 Maneuver	489	-	-	-	-	-
Stage 1	786	-	-	-	-	-
Stage 2	747	-	-	-	-	-

Approach	EB	NB	SB
HCM Control Delay, s	13.7	0.4	0
HCM LOS	B		

Minor Lane/Major Mvmt	NBL	NBT	EBLn1	EBLn2	SBT	SBR
Capacity (veh/h)	1287	-	489	794	-	-
HCM Lane V/C Ratio	0.012	-	0.214	0.024	-	-
HCM Control Delay (s)	7.8	-	14.4	9.6	-	-
HCM Lane LOS	A	-	B	A	-	-
HCM 95th %tile Q(veh)	0	-	0.8	0.1	-	-

DocuSign Envelope ID: 5C03745C-4B01-4834-A65D-B77F558A4F46

Lane Group	EBL	EBT	EBR	WBL	WBT	WBR	NBL	NBT	NBR	SBL	SBT	SBR
Lane Configurations												
Traffic Volume (vph)	111	152	78	111	135	442	56	952	89	260	697	58
Future Volume (vph)	111	152	78	111	135	442	56	952	89	260	697	58
Ideal Flow (vphpl)	1900	1900	1900	1900	1900	1900	1900	1900	1900	1900	1900	1900
Grade (%)		3%			0%			2%			-7%	
Storage Length (ft)	0		0	200		0	175		150	200		0
Storage Lanes	1		0	1		1	1		1	2		0
Taper Length (ft)	25			25			25			25		
Lane Util. Factor	1.00	0.95	0.95	1.00	1.00	1.00	1.00	0.95	1.00	0.97	0.95	0.95
Frt		0.949				0.850			0.850		0.989	
Flt Protected	0.950			0.950			0.950			0.950		
Satd. Flow (prot)	1743	3308	0	1719	1810	1538	1686	3372	1508	3452	3519	0
Flt Permitted	0.950			0.950			0.950			0.950		
Satd. Flow (perm)	1743	3308	0	1719	1810	1538	1686	3372	1508	3452	3519	0
Right Turn on Red			No			No			No			No
Satd. Flow (RTOR)												
Link Speed (mph)		35			35			45			45	
Link Distance (ft)		248			1200			1589			1600	
Travel Time (s)		4.8			23.4			24.1			24.2	
Peak Hour Factor	0.90	0.90	0.90	0.90	0.90	0.90	0.90	0.90	0.90	0.90	0.90	0.90
Heavy Vehicles (%)	2%	2%	2%	5%	5%	5%	6%	6%	6%	5%	5%	5%
Adj. Flow (vph)	123	169	87	123	150	491	62	1058	99	289	774	64
Shared Lane Traffic (%)												
Lane Group Flow (vph)	123	256	0	123	150	491	62	1058	99	289	838	0
Enter Blocked Intersection	No	No	No	No	No	No	No	No	No	No	No	No
Lane Alignment	L NA	Left	Right	Left	Left	Left	Left	L NA	Right	Left	Left	Right
Median Width(ft)		12			12			24			24	
Link Offset(ft)		0			0			0			0	
Crosswalk Width(ft)		16			16			16			16	
Two way Left Turn Lane												
Headway Factor	1.02	1.02	1.02	1.00	1.00	1.00	1.01	1.01	1.01	0.96	0.96	0.96
Turning Speed (mph)	15		9	15		9	15		9	15		9
Number of Detectors	1	2		1	2	1	1	2	1	1	2	
Detector Template	Left	Thru		Left	Thru	Right	Left	Thru	Right	Left	Thru	
Leading Detector (ft)	20	100		20	100	20	20	100	20	20	100	
Trailing Detector (ft)	0	0		0	0	0	0	0	0	0	0	
Detector 1 Position(ft)	0	0		0	0	0	0	0	0	0	0	
Detector 1 Size(ft)	20	6		20	6	20	20	6	20	20	6	
Detector 1 Type	Cl+Ex	Cl+Ex		Cl+Ex	Cl+Ex	Cl+Ex	Cl+Ex	Cl+Ex	Cl+Ex	Cl+Ex	Cl+Ex	
Detector 1 Channel												
Detector 1 Extend (s)	0.0	0.0		0.0	0.0	0.0	0.0	0.0	0.0	0.0	0.0	
Detector 1 Queue (s)	0.0	0.0		0.0	0.0	0.0	0.0	0.0	0.0	0.0	0.0	
Detector 1 Delay (s)	0.0	0.0		0.0	0.0	0.0	0.0	0.0	0.0	0.0	0.0	
Detector 2 Position(ft)		94			94			94			94	
Detector 2 Size(ft)		6			6			6			6	
Detector 2 Type		Cl+Ex			Cl+Ex			Cl+Ex			Cl+Ex	
Detector 2 Channel												
Detector 2 Extend (s)		0.0			0.0			0.0			0.0	
Turn Type	Prot	NA		Prot	NA	pm+ov	Prot	NA	pm+ov	Prot	NA	

DocuSign Envelope ID: 5C03745C-4B01-4834-A65D-B77F558A4F46

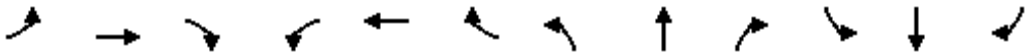

Lane Group	EBL	EBT	EBR	WBL	WBT	WBR	NBL	NBT	NBR	SBL	SBT	SBR
Protected Phases	7	4		3	8	1	5	2	3	1	6	
Permitted Phases						8			2			
Detector Phase	7	4		3	8	1	5	2	3	1	6	
Switch Phase												
Minimum Initial (s)	7.0	7.0		7.0	7.0	7.0	7.0	12.0	7.0	7.0	12.0	
Minimum Split (s)	14.0	14.0		14.0	14.0	14.0	14.0	19.0	14.0	14.0	19.0	
Total Split (s)	17.0	18.0		17.0	18.0	34.0	15.0	51.0	17.0	34.0	70.0	
Total Split (%)	14.2%	15.0%		14.2%	15.0%	28.3%	12.5%	42.5%	14.2%	28.3%	58.3%	
Maximum Green (s)	10.0	11.0		10.0	11.0	27.0	8.0	44.0	10.0	27.0	63.0	
Yellow Time (s)	5.0	5.0		5.0	5.0	5.0	5.0	5.0	5.0	5.0	5.0	
All-Red Time (s)	2.0	2.0		2.0	2.0	2.0	2.0	2.0	2.0	2.0	2.0	
Lost Time Adjust (s)	-2.0	-2.0		-2.0	-2.0	-2.0	-2.0	-2.0	-2.0	-2.0	-2.0	
Total Lost Time (s)	5.0	5.0		5.0	5.0	5.0	5.0	5.0	5.0	5.0	5.0	
Lead/Lag	Lead	Lag		Lead	Lag	Lead	Lead	Lag	Lead	Lead	Lag	
Lead-Lag Optimize?	Yes	Yes		Yes	Yes	Yes	Yes	Yes	Yes	Yes	Yes	
Vehicle Extension (s)	3.0	3.0		3.0	3.0	3.0	3.0	3.0	3.0	3.0	3.0	
Minimum Gap (s)	3.0	3.0		3.0	3.0	3.0	3.0	3.0	3.0	3.0	3.0	
Time Before Reduce (s)	0.0	0.0		0.0	0.0	0.0	0.0	15.0	0.0	0.0	15.0	
Time To Reduce (s)	0.0	0.0		0.0	0.0	0.0	0.0	30.0	0.0	0.0	30.0	
Recall Mode	None	None		None	None	None	None	Min	None	None	Min	
Act Effct Green (s)	11.7	12.8		11.8	12.8	43.3	9.9	41.9	58.7	25.3	60.9	
Actuated g/C Ratio	0.10	0.11		0.11	0.11	0.39	0.09	0.37	0.52	0.23	0.54	
v/c Ratio	0.68	0.68		0.68	0.72	0.83	0.42	0.84	0.13	0.37	0.44	
Control Delay	70.0	59.3		70.9	70.7	45.2	61.1	39.6	14.8	38.6	16.8	
Queue Delay	0.0	0.0		0.0	0.0	0.0	0.0	0.0	0.0	0.0	0.0	
Total Delay	70.0	59.3		70.9	70.7	45.2	61.1	39.6	14.8	38.6	16.8	
LOS	E	E		E	E	D	E	D	B	D	B	
Approach Delay		62.8			54.3			38.7			22.4	
Approach LOS		E			D			D			C	
Queue Length 50th (ft)	94	102		94	115	336	46	383	38	95	197	
Queue Length 95th (ft)	#184	#150		#186	#219	#517	93	473	68	137	246	
Internal Link Dist (ft)		168			1120			1509			1520	
Turn Bay Length (ft)				200			175		150	200		
Base Capacity (vph)	189	388		186	213	649	152	1402	795	905	2068	
Starvation Cap Reductn	0	0		0	0	0	0	0	0	0	0	
Spillback Cap Reductn	0	0		0	0	0	0	0	0	0	0	
Storage Cap Reductn	0	0		0	0	0	0	0	0	0	0	
Reduced v/c Ratio	0.65	0.66		0.66	0.70	0.76	0.41	0.75	0.12	0.32	0.41	

Intersection Summary			
Area Type:	Other		
Cycle Length: 120			
Actuated Cycle Length: 112.1			
Natural Cycle: 80			
Control Type: Actuated-Uncoordinated			
Maximum v/c Ratio: 0.84			
Intersection Signal Delay: 39.4		Intersection LOS: D	
Intersection Capacity Utilization 72.3%		ICU Level of Service C	
Analysis Period (min) 15			

DocuSign Envelope ID: 5C03745C-4B01-4834-A65D-B77F558A4F46

95th percentile volume exceeds capacity, queue may be longer.
Queue shown is maximum after two cycles.

Splits and Phases: 5: NC 191 (Brevard Rd) & Blue Ridge Pkwy Access/NC 191 Connector

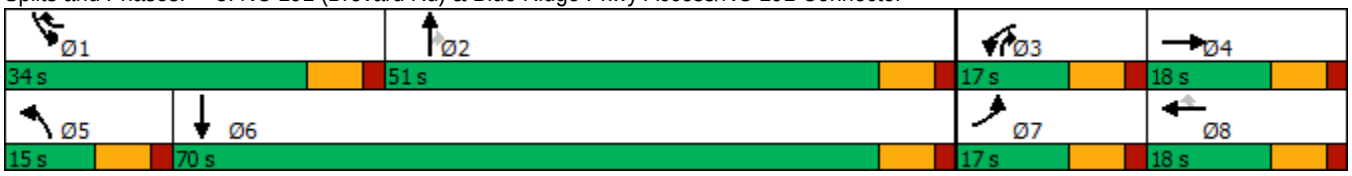

DocuSign Envelope ID: 5C03745C-4B01-4834-A65D-B77F558A4F46

Intersection	
Int Delay, s/veh	0

Movement	EBL	EBT	EBR	WBL	WBT	WBR	NBL	NBT	NBR	SBL	SBT	SBR
Lane Configurations		↑	↱		↰						↑	↱
Traffic Vol, veh/h	0	499	459	1	360	0	0	0	0	0	1	435
Future Vol, veh/h	0	499	459	1	360	0	0	0	0	0	1	435
Conflicting Peds, #/hr	0	0	0	0	0	0	0	0	0	0	0	0
Sign Control	Free	Free	Free	Free	Free	Free	Stop	Stop	Stop	Stop	Stop	Stop
RT Channelized	-	-	Yield	-	-	None	-	-	None	-	-	Yield
Storage Length	-	-	200	-	-	-	-	-	-	-	-	325
Veh in Median Storage, #	-	0	-	-	0	-	-	16974	-	-	0	-
Grade, %	-	0	-	-	0	-	-	0	-	-	0	-
Peak Hour Factor	90	90	90	90	90	90	90	90	90	90	90	90
Heavy Vehicles, %	2	5	12	12	5	2	2	2	2	2	12	5
Mvmt Flow	0	554	510	1	400	0	0	0	0	0	1	483

Major/Minor	Major1			Major2					Minor2			
Conflicting Flow All	-	0	0	554	0	0			-	956	400	
Stage 1	-	-	-	-	-	-			-	402	-	
Stage 2	-	-	-	-	-	-			-	554	-	
Critical Hdwy	-	-	-	4.22	-	-			-	6.62	6.25	
Critical Hdwy Stg 1	-	-	-	-	-	-			-	5.62	-	
Critical Hdwy Stg 2	-	-	-	-	-	-			-	5.62	-	
Follow-up Hdwy	-	-	-	2.308	-	-			-	4.108	3.345	
Pot Cap-1 Maneuver	0	-	-	968	-	0			0	248	643	
Stage 1	0	-	-	-	-	0			0	583	-	
Stage 2	0	-	-	-	-	0			0	498	-	
Platoon blocked, %		-	-		-							
Mov Cap-1 Maneuver	-	-	-	968	-	-			-	0	643	
Mov Cap-2 Maneuver	-	-	-	-	-	-			-	0	-	
Stage 1	-	-	-	-	-	-			-	0	-	
Stage 2	-	-	-	-	-	-			-	0	-	

Approach	EB	WB	SB
HCM Control Delay, s	0	0	
HCM LOS			-

Minor Lane/Major Mvmt	EBT	EBR	WBL	WBT	SBLn1	SBLn2
Capacity (veh/h)	-	-	968	-	-	643
HCM Lane V/C Ratio	-	-	0.001	-	-	0.752
HCM Control Delay (s)	-	-	8.7	0	-	25.5
HCM Lane LOS	-	-	A	A	-	D
HCM 95th %tile Q(veh)	-	-	0	-	-	6.8

DocuSign Envelope ID: 5C03745C-4B01-4834-A65D-B77F558A4F46

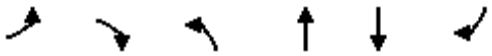

Lane Group	EBL	EBR	NBL	NBT	SBT	SBR
Lane Configurations						
Traffic Volume (vph)	499	0	360	1	0	0
Future Volume (vph)	499	0	360	1	0	0
Ideal Flow (vphpl)	1900	1900	1900	1900	1900	1900
Lane Util. Factor	1.00	1.00	1.00	1.00	1.00	1.00
Frt						
Flt Protected	0.950			0.952		
Satd. Flow (prot)	1612	0	0	1722	0	0
Flt Permitted	0.950			0.952		
Satd. Flow (perm)	1612	0	0	1722	0	0
Right Turn on Red		No				No
Satd. Flow (RTOR)						
Link Speed (mph)	35			45	45	
Link Distance (ft)	546			940	894	
Travel Time (s)	10.6			14.2	13.5	
Peak Hour Factor	0.90	0.90	0.90	0.90	0.90	0.90
Heavy Vehicles (%)	12%	2%	5%	12%	2%	2%
Adj. Flow (vph)	554	0	400	1	0	0
Shared Lane Traffic (%)						
Lane Group Flow (vph)	554	0	0	401	0	0
Enter Blocked Intersection	No	No	No	No	No	No
Lane Alignment	Left	Right	Left	Left	Left	Right
Median Width(ft)	12			0	0	
Link Offset(ft)	0			0	0	
Crosswalk Width(ft)	16			16	16	
Two way Left Turn Lane						
Headway Factor	1.00	1.00	1.00	1.00	1.00	1.00
Turning Speed (mph)	15	9	15			9
Number of Detectors	1		1	2		
Detector Template	Left		Left	Thru		
Leading Detector (ft)	20		20	100		
Trailing Detector (ft)	0		0	0		
Detector 1 Position(ft)	0		0	0		
Detector 1 Size(ft)	20		20	6		
Detector 1 Type	Cl+Ex		Cl+Ex	Cl+Ex		
Detector 1 Channel						
Detector 1 Extend (s)	0.0		0.0	0.0		
Detector 1 Queue (s)	0.0		0.0	0.0		
Detector 1 Delay (s)	0.0		0.0	0.0		
Detector 2 Position(ft)				94		
Detector 2 Size(ft)				6		
Detector 2 Type				Cl+Ex		
Detector 2 Channel						
Detector 2 Extend (s)				0.0		
Turn Type	Prot		Split	NA		
Protected Phases	2		4	4		
Permitted Phases						
Detector Phase	2		4	4		
Switch Phase						

DocuSign Envelope ID: 5C03745C-4B01-4834-A65D-B77F558A4F46

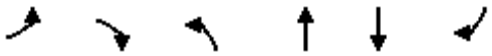

Lane Group	EBL	EBR	NBL	NBT	SBT	SBR
Minimum Initial (s)	10.0		7.0	7.0		
Minimum Split (s)	17.0		14.0	14.0		
Total Split (s)	35.0		25.0	25.0		
Total Split (%)	58.3%		41.7%	41.7%		
Maximum Green (s)	28.0		18.0	18.0		
Yellow Time (s)	5.0		5.0	5.0		
All-Red Time (s)	2.0		2.0	2.0		
Lost Time Adjust (s)	-2.0			-2.0		
Total Lost Time (s)	5.0			5.0		
Lead/Lag						
Lead-Lag Optimize?						
Vehicle Extension (s)	3.0		3.0	3.0		
Recall Mode	Min		None	None		
Act Effct Green (s)	23.7			17.5		
Actuated g/C Ratio	0.46			0.34		
v/c Ratio	0.75			0.69		
Control Delay	19.0			23.4		
Queue Delay	0.0			0.0		
Total Delay	19.0			23.4		
LOS	B			C		
Approach Delay	19.0			23.4		
Approach LOS	B			C		
Queue Length 50th (ft)	140			107		
Queue Length 95th (ft)	245			#221		
Internal Link Dist (ft)	466			860	814	
Turn Bay Length (ft)						
Base Capacity (vph)	973			693		
Starvation Cap Reductn	0			0		
Spillback Cap Reductn	0			0		
Storage Cap Reductn	0			0		
Reduced v/c Ratio	0.57			0.58		

Intersection Summary			
Area Type:	Other		
Cycle Length: 60			
Actuated Cycle Length: 51.6			
Natural Cycle: 55			
Control Type: Actuated-Uncoordinated			
Maximum v/c Ratio: 0.75			
Intersection Signal Delay: 20.9		Intersection LOS: C	
Intersection Capacity Utilization 56.0%		ICU Level of Service B	
Analysis Period (min) 15			
# 95th percentile volume exceeds capacity, queue may be longer.			
Queue shown is maximum after two cycles.			

Splits and Phases: 7: HE-0001 NWB Ramp & NC 191 Connector

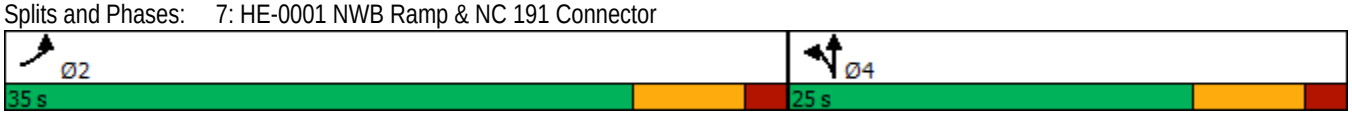

DocuSign Envelope ID: 5C03745C-4B01-4834-A65D-B77F558A4F46

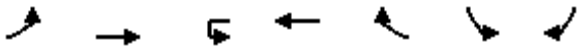

Lane Group	EBL	EBT	WBU	WBT	WBR	SBL	SBR
Lane Configurations							
Traffic Volume (vph)	62	629	0	701	412	368	62
Future Volume (vph)	62	629	0	701	412	368	62
Ideal Flow (vphpl)	1900	1900	1900	1900	1900	1900	1900
Grade (%)		-9%		5%		-9%	
Storage Length (ft)	500		350		0	0	400
Storage Lanes	1		1		1	2	1
Taper Length (ft)	25		25			25	
Lane Util. Factor	1.00	1.00	1.00	1.00	1.00	0.97	1.00
Frt					0.850		0.850
Flt Protected	0.950					0.950	
Satd. Flow (prot)	1715	1805	1715	1715	1458	3485	1607
Flt Permitted	0.950					0.950	
Satd. Flow (perm)	1715	1805	1715	1715	1458	3485	1607
Right Turn on Red					No		No
Satd. Flow (RTOR)							
Link Speed (mph)		35		35		45	
Link Distance (ft)		1579		1808		1089	
Travel Time (s)		30.8		35.2		16.5	
Peak Hour Factor	0.90	0.90	0.90	0.90	0.90	0.90	0.90
Heavy Vehicles (%)	10%	10%	8%	8%	8%	5%	5%
Adj. Flow (vph)	69	699	0	779	458	409	69
Shared Lane Traffic (%)							
Lane Group Flow (vph)	69	699	0	779	458	409	69
Enter Blocked Intersection	No	No	No	No	No	No	No
Lane Alignment	Left	Left	R NA	Left	Right	Left	Right
Median Width(ft)		12		12		24	
Link Offset(ft)		0		0		0	
Crosswalk Width(ft)		16		16		16	
Two way Left Turn Lane							
Headway Factor	0.94	0.94	1.03	1.03	1.03	0.94	0.94
Turning Speed (mph)	15		9		9	15	9
Number of Detectors	1	2	1	2	1	1	1
Detector Template	Left	Thru	Left	Thru	Right	Left	Right
Leading Detector (ft)	20	100	20	100	20	20	20
Trailing Detector (ft)	0	0	0	0	0	0	0
Detector 1 Position(ft)	0	0	0	0	0	0	0
Detector 1 Size(ft)	20	6	20	6	20	20	20
Detector 1 Type	Cl+Ex	Cl+Ex	Cl+Ex	Cl+Ex	Cl+Ex	Cl+Ex	Cl+Ex
Detector 1 Channel							
Detector 1 Extend (s)	0.0	0.0	0.0	0.0	0.0	0.0	0.0
Detector 1 Queue (s)	0.0	0.0	0.0	0.0	0.0	0.0	0.0
Detector 1 Delay (s)	0.0	0.0	0.0	0.0	0.0	0.0	0.0
Detector 2 Position(ft)		94		94			
Detector 2 Size(ft)		6		6			
Detector 2 Type		Cl+Ex		Cl+Ex			
Detector 2 Channel							
Detector 2 Extend (s)		0.0		0.0			
Turn Type	Prot	NA	Prot	NA	pm+ov	Prot	pm+ov

DocuSign Envelope ID: 5C03745C-4B01-4834-A65D-B77F558A4F46

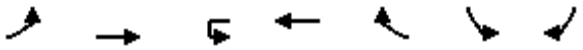

Lane Group	EBL	EBT	WBU	WBT	WBR	SBL	SBR
Protected Phases	5	2	1	6	4	4	5
Permitted Phases					6		4
Detector Phase	5	2	1	6	4	4	5
Switch Phase							
Minimum Initial (s)	7.0	10.0	7.0	10.0	7.0	7.0	7.0
Minimum Split (s)	13.7	17.3	13.3	17.3	13.8	13.8	13.7
Total Split (s)	18.0	112.0	14.0	108.0	34.0	34.0	18.0
Total Split (%)	11.3%	70.0%	8.8%	67.5%	21.3%	21.3%	11.3%
Maximum Green (s)	11.3	104.7	7.7	100.7	27.2	27.2	11.3
Yellow Time (s)	3.3	4.6	3.0	4.6	3.3	3.3	3.3
All-Red Time (s)	3.4	2.7	3.3	2.7	3.5	3.5	3.4
Lost Time Adjust (s)	-1.7	-2.3	-1.3	-2.3	-2.3	-1.8	-1.8
Total Lost Time (s)	5.0	5.0	5.0	5.0	4.5	5.0	4.9
Lead/Lag	Lead	Lead	Lag	Lag			Lead
Lead-Lag Optimize?	Yes	Yes	Yes	Yes			Yes
Vehicle Extension (s)	2.0	3.0	2.0	3.0	3.0	3.0	2.0
Recall Mode	None	C-Max	None	C-Max	None	None	None
Act Effct Green (s)	11.6	124.2		107.6	138.9	25.8	42.5
Actuated g/C Ratio	0.07	0.78		0.67	0.87	0.16	0.27
v/c Ratio	0.56	0.50		0.68	0.36	0.73	0.16
Control Delay	88.6	8.3		11.3	1.9	71.6	44.6
Queue Delay	0.0	0.0		0.0	0.0	0.0	0.0
Total Delay	88.6	8.3		11.3	1.9	71.6	44.6
LOS	F	A		B	A	E	D
Approach Delay		15.5		7.8		67.7	
Approach LOS		B		A		E	
Queue Length 50th (ft)	71	242		270	28	211	55
Queue Length 95th (ft)	128	341		336	78	267	97
Internal Link Dist (ft)		1499		1728		1009	
Turn Bay Length (ft)	500						400
Base Capacity (vph)	139	1401		1153	1294	631	441
Starvation Cap Reductn	0	0		0	0	0	0
Spillback Cap Reductn	0	0		0	0	0	0
Storage Cap Reductn	0	0		0	0	0	0
Reduced v/c Ratio	0.50	0.50		0.68	0.35	0.65	0.16

Intersection Summary			
Area Type:	Other		
Cycle Length: 160			
Actuated Cycle Length: 160			
Offset: 15 (9%), Referenced to phase 2:EBT and 6:WBT, Start of Green			
Natural Cycle: 75			
Control Type: Actuated-Coordinated			
Maximum v/c Ratio: 0.73			
Intersection Signal Delay: 21.7		Intersection LOS: C	
Intersection Capacity Utilization 65.7%		ICU Level of Service C	
Analysis Period (min) 15			

DocuSign Envelope ID: 5C03745C-4B01-4834-A65D-B77F558A4F46

Splits and Phases: 8: NC 146 (Long Shoals Rd) & Clayton Rd

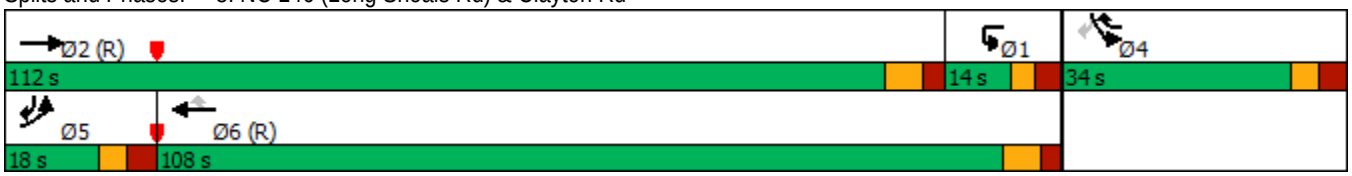

DocuSign Envelope ID: 5C03745C-4B01-4834-A65D-B77F558A4F46

Intersection	
Int Delay, s/veh	215.7

Movement	EBU	EBT	EBR	WBL	WBT	NBL	NBR
Lane Configurations							
Traffic Vol, veh/h	0	1001	46	488	943	28	280
Future Vol, veh/h	0	1001	46	488	943	28	280
Conflicting Peds, #/hr	0	0	0	0	0	0	0
Sign Control	Free	Free	Free	Free	Free	Stop	Stop
RT Channelized	-	-	None	-	None	-	Stop
Storage Length	325	-	-	325	-	200	0
Veh in Median Storage, #	-	0	-	-	0	0	-
Grade, %	-	0	-	-	0	0	-
Peak Hour Factor	90	90	90	90	90	90	90
Heavy Vehicles, %	8	8	8	8	8	3	3
Mvmt Flow	0	1112	51	542	1048	31	311

Major/Minor	Major1			Major2		Minor1	
Conflicting Flow All	1048	0	0	1163	0	2746	582
Stage 1	-	-	-	-	-	1138	-
Stage 2	-	-	-	-	-	1608	-
Critical Hdwy	6.56	-	-	4.26	-	6.86	6.96
Critical Hdwy Stg 1	-	-	-	-	-	5.86	-
Critical Hdwy Stg 2	-	-	-	-	-	5.86	-
Follow-up Hdwy	2.58	-	-	2.28	-	3.53	3.33
Pot Cap-1 Maneuver	294	-	-	563	-	~ 16	454
Stage 1	-	-	-	-	-	265	-
Stage 2	-	-	-	-	-	148	-
Platoon blocked, %		-	-		-		
Mov Cap-1 Maneuver	294	-	-	563	-	~ 1	454
Mov Cap-2 Maneuver	-	-	-	-	-	~ 1	-
Stage 1	-	-	-	-	-	265	-
Stage 2	-	-	-	-	-	~ 5	-

Approach	EB	WB	NB
HCM Control Delay, s	0	19.2	$ 1861.7
HCM LOS			F

Minor Lane/Major Mvmt	NBLn1	NBLn2	EBU	EBT	EBR	WBL	WBT
Capacity (veh/h)	1	454	294	-	-	563	-
HCM Lane V/C Ratio	31.111	0.685	-	-	-	0.963	-
HCM Control Delay (s)	$ 20193.3	28.5	0	-	-	56.4	-
HCM Lane LOS	F	D	A	-	-	F	-
HCM 95th %tile Q(veh)	5.8	5.1	0	-	-	13	-

Notes			
~: Volume exceeds capacity	$: Delay exceeds 300s	+: Computation Not Defined	*: All major volume in platoon

DocuSign Envelope ID: 5C03745C-4B01-4834-A65D-B77F558A4F46

Lane Group	EBL	EBT	EBR2	WBL	WBT	SEL	SER2	NWL
Lane Configurations								
Traffic Volume (vph)	265	788	228	629	904	934	298	229
Future Volume (vph)	265	788	228	629	904	934	298	229
Ideal Flow (vphpl)	1900	1900	1900	1900	1900	1900	1900	1900
Grade (%)		3%			-7%			
Storage Length (ft)	475			0		0		0
Storage Lanes	2			2		2		2
Taper Length (ft)	25			25		25		25
Lane Util. Factor	0.97	0.95	1.00	0.97	0.95	0.97	1.00	0.97
Frt			0.850				0.850	
Flt Protected	0.950			0.950		0.950		0.950
Satd. Flow (prot)	3080	3292	1420	3236	3593	3434	1525	3291
Flt Permitted	0.950			0.950		0.950		0.950
Satd. Flow (perm)	3080	3292	1420	3236	3593	3434	1525	3291
Right Turn on Red			Yes				Yes	
Satd. Flow (RTOR)			152				153	
Link Speed (mph)		45			45			
Link Distance (ft)		1000			418			
Travel Time (s)		15.2			6.3			
Peak Hour Factor	0.90	0.90	0.90	0.90	0.90	0.90	0.90	0.90
Heavy Vehicles (%)	12%	8%	12%	12%	4%	4%	8%	8%
Adj. Flow (vph)	294	876	253	699	1004	1038	331	254
Shared Lane Traffic (%)								
Lane Group Flow (vph)	294	876	253	699	1004	1038	331	254
Enter Blocked Intersection	No	No	No	No	No	No	No	No
Lane Alignment	Left	Left	Right	Left	Left	Left	Right	Left
Median Width(ft)		24			24			
Link Offset(ft)		0			0			
Crosswalk Width(ft)		16			16			
Two way Left Turn Lane								
Headway Factor	1.02	1.02	1.02	0.96	0.96	0.97	0.97	0.98
Turning Speed (mph)	15		9	15		15	9	15
Number of Detectors	1	2	1	1	2	1	1	1
Detector Template	Left	Thru	Right	Left	Thru	Left	Right	Left
Leading Detector (ft)	20	100	20	20	100	20	20	20
Trailing Detector (ft)	0	0	0	0	0	0	0	0
Detector 1 Position(ft)	0	0	0	0	0	0	0	0
Detector 1 Size(ft)	20	6	20	20	6	20	20	20
Detector 1 Type	Cl+Ex	Cl+Ex	Cl+Ex	Cl+Ex	Cl+Ex	Cl+Ex	Cl+Ex	Cl+Ex
Detector 1 Channel								
Detector 1 Extend (s)	0.0	0.0	0.0	0.0	0.0	0.0	0.0	0.0
Detector 1 Queue (s)	0.0	0.0	0.0	0.0	0.0	0.0	0.0	0.0
Detector 1 Delay (s)	0.0	0.0	0.0	0.0	0.0	0.0	0.0	0.0
Detector 2 Position(ft)		94			94			
Detector 2 Size(ft)		6			6			
Detector 2 Type		Cl+Ex			Cl+Ex			
Detector 2 Channel								
Detector 2 Extend (s)		0.0			0.0			
Turn Type	Prot	NA	Free	Prot	NA	Prot	Free	Prot

DocuSign Envelope ID: 5C03745C-4B01-4834-A65D-B77F558A4F46

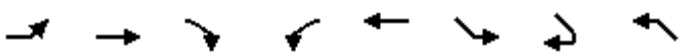

Lane Group	EBL	EBT	EBR2	WBL	WBT	SEL	SER2	NWL
Protected Phases	5	2		1	6	4		8
Permitted Phases			Free				Free	
Detector Phase	5	2		1	6	4		8
Switch Phase								
Minimum Initial (s)	7.0	12.0		7.0	12.0	7.0		7.0
Minimum Split (s)	15.3	21.0		14.5	21.0	15.0		15.0
Total Split (s)	28.0	81.0		36.0	89.0	43.0		43.0
Total Split (%)	17.5%	50.6%		22.5%	55.6%	26.9%		26.9%
Maximum Green (s)	19.7	72.0		28.5	80.0	35.0		35.0
Yellow Time (s)	3.1	5.2		3.6	5.2	3.5		3.5
All-Red Time (s)	5.2	3.8		3.9	3.8	4.5		4.5
Lost Time Adjust (s)	-3.3	-4.0		-2.5	-4.0	-3.0		-3.0
Total Lost Time (s)	5.0	5.0		5.0	5.0	5.0		5.0
Lead/Lag	Lag	Lead		Lag	Lead			
Lead-Lag Optimize?	Yes	Yes		Yes	Yes			
Vehicle Extension (s)	2.0	6.0		2.0	6.0	2.0		2.0
Minimum Gap (s)	0.2	3.0		0.2	3.0	0.2		0.2
Time Before Reduce (s)	0.0	15.0		0.0	15.0	0.0		0.0
Time To Reduce (s)	0.0	30.0		0.0	30.0	0.0		0.0
Recall Mode	None	C-Max		None	C-Max	None		None
Act Effct Green (s)	23.0	76.0	160.0	31.0	84.0	38.0	160.0	38.0
Actuated g/C Ratio	0.14	0.48	1.00	0.19	0.52	0.24	1.00	0.24
v/c Ratio	0.67	0.56	0.18	1.12	0.53	1.27	0.22	0.33
Control Delay	73.6	23.2	0.3	124.9	15.7	180.4	0.3	51.8
Queue Delay	0.0	1.1	0.0	0.3	0.9	5.3	0.0	0.0
Total Delay	73.6	24.3	0.3	125.2	16.6	185.7	0.3	51.8
LOS	E	C	A	F	B	F	A	D
Approach Delay		30.2			61.2			
Approach LOS		C			E			
Queue Length 50th (ft)	157	337	0	~439	231	~704	0	114
Queue Length 95th (ft)	210	375	0	#571	290	#840	0	157
Internal Link Dist (ft)		920			338			
Turn Bay Length (ft)	475							
Base Capacity (vph)	442	1563	1420	626	1886	815	1525	781
Starvation Cap Reductn	0	0	0	23	564	0	0	0
Spillback Cap Reductn	0	425	0	0	0	413	0	0
Storage Cap Reductn	0	0	0	0	0	0	0	0
Reduced v/c Ratio	0.67	0.77	0.18	1.16	0.76	2.58	0.22	0.33

Intersection Summary			
Area Type:	Other		
Cycle Length: 160			
Actuated Cycle Length: 160			
Offset: 0 (0%), Referenced to phase 2:EBT and 6:WBT, Start of Green, Master Intersection			
Natural Cycle: 150			
Control Type: Actuated-Coordinated			
Maximum v/c Ratio: 1.27			
Intersection Signal Delay: 74.4		Intersection LOS: E	
Intersection Capacity Utilization 78.9%		ICU Level of Service D	

DocuSign Envelope ID: 5C03745C-4B01-4834-A65D-B77F558A4F46

Analysis Period (min) 15

~ Volume exceeds capacity, queue is theoretically infinite.
Queue shown is maximum after two cycles.

95th percentile volume exceeds capacity, queue may be longer.
Queue shown is maximum after two cycles.

Splits and Phases: 10: I-26 Ramp & NC 146 (Long Shoals Rd)

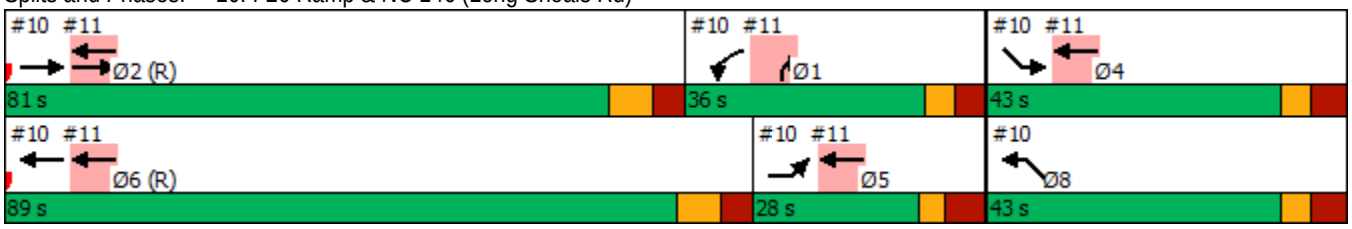

DocuSign Envelope ID: 5C03745C-4B01-4834-A65D-B77F558A4F46

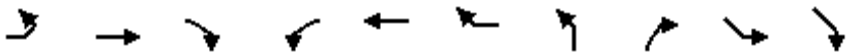

Lane Group	EBL	EBT	EBR	WBL	WBT	WBR	NBL	NBR	SEL	SER	Ø4	Ø5
Lane Configurations												
Traffic Volume (vph)	0	1722	0	0	1533	954	0	550	0	0		
Future Volume (vph)	0	1722	0	0	1533	954	0	550	0	0		
Ideal Flow (vphpl)	1900	1900	1900	1900	1900	1900	1900	1900	1900	1900		
Storage Length (ft)	0		0	0		275	0	0	0	0		
Storage Lanes	0		0	0		1	0	2	0	0		
Taper Length (ft)	25			25			25		25			
Lane Util. Factor	1.00	0.95	1.00	1.00	0.95	1.00	1.00	0.88	1.00	1.00		
Frt						0.850		0.850				
Flt Protected												
Satd. Flow (prot)	0	3471	0	0	3471	1442	0	2733	0	0		
Flt Permitted												
Satd. Flow (perm)	0	3471	0	0	3471	1442	0	2733	0	0		
Right Turn on Red			No			No		No				
Satd. Flow (RTOR)												
Link Speed (mph)		45			45		45		45			
Link Distance (ft)		418			593		396		464			
Travel Time (s)		6.3			9.0		6.0		7.0			
Peak Hour Factor	0.90	0.90	0.90	0.90	0.90	0.90	0.90	0.90	0.90	0.90		
Heavy Vehicles (%)	2%	4%	2%	2%	4%	12%	2%	4%	2%	2%		
Adj. Flow (vph)	0	1913	0	0	1703	1060	0	611	0	0		
Shared Lane Traffic (%)												
Lane Group Flow (vph)	0	1913	0	0	1703	1060	0	611	0	0		
Enter Blocked Intersection	No	No	No	No	No	No	No	No	No	No		
Lane Alignment	Left	L NA	Right	Left	Right	Right	Left	R NA	Left	Right		
Median Width(ft)		0			24		0		0			
Link Offset(ft)		0			0		0		0			
Crosswalk Width(ft)		16			16		16		16			
Two way Left Turn Lane												
Headway Factor	1.00	1.00	1.00	1.00	1.00	1.00	1.00	1.00	1.00	1.00		
Turning Speed (mph)	15		9	15		9	15	9	15	9		
Number of Detectors		2			2	1		1				
Detector Template		Thru			Thru	Right		Right				
Leading Detector (ft)		100			100	20		20				
Trailing Detector (ft)		0			0	0		0				
Detector 1 Position(ft)		0			0	0		0				
Detector 1 Size(ft)		6			6	20		20				
Detector 1 Type		Cl+Ex			Cl+Ex	Cl+Ex		Cl+Ex				
Detector 1 Channel												
Detector 1 Extend (s)		0.0			0.0	0.0		0.0				
Detector 1 Queue (s)		0.0			0.0	0.0		0.0				
Detector 1 Delay (s)		0.0			0.0	0.0		0.0				
Detector 2 Position(ft)		94			94							
Detector 2 Size(ft)		6			6							
Detector 2 Type		Cl+Ex			Cl+Ex							
Detector 2 Channel												
Detector 2 Extend (s)		0.0			0.0							
Turn Type		NA			NA	Free		Prot				
Protected Phases		2			2 4 5 6			1			4	5

DocuSign Envelope ID: 5C03745C-4B01-4834-A65D-B77F558A4F46

Lane Group	Ø6	Ø8
Lane Configurations		
Traffic Volume (vph)		
Future Volume (vph)		
Ideal Flow (vphpl)		
Storage Length (ft)		
Storage Lanes		
Taper Length (ft)		
Lane Util. Factor		
Frt		
Flt Protected		
Satd. Flow (prot)		
Flt Permitted		
Satd. Flow (perm)		
Right Turn on Red		
Satd. Flow (RTOR)		
Link Speed (mph)		
Link Distance (ft)		
Travel Time (s)		
Peak Hour Factor		
Heavy Vehicles (%)		
Adj. Flow (vph)		
Shared Lane Traffic (%)		
Lane Group Flow (vph)		
Enter Blocked Intersection		
Lane Alignment		
Median Width(ft)		
Link Offset(ft)		
Crosswalk Width(ft)		
Two way Left Turn Lane		
Headway Factor		
Turning Speed (mph)		
Number of Detectors		
Detector Template		
Leading Detector (ft)		
Trailing Detector (ft)		
Detector 1 Position(ft)		
Detector 1 Size(ft)		
Detector 1 Type		
Detector 1 Channel		
Detector 1 Extend (s)		
Detector 1 Queue (s)		
Detector 1 Delay (s)		
Detector 2 Position(ft)		
Detector 2 Size(ft)		
Detector 2 Type		
Detector 2 Channel		
Detector 2 Extend (s)		
Turn Type		
Protected Phases	6	8

DocuSign Envelope ID: 5C03745C-4B01-4834-A65D-B77F558A4F46

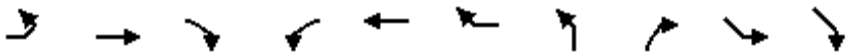

Lane Group	EBL	EBT	EBR	WBL	WBT	WBR	NBL	NBR	SEL	SER	Ø4	Ø5
Permitted Phases						Free						
Detector Phase		2			2 4 5 6			1				
Switch Phase												
Minimum Initial (s)		12.0						7.0			7.0	7.0
Minimum Split (s)		21.0						14.5			15.0	15.3
Total Split (s)		81.0						36.0			43.0	28.0
Total Split (%)		50.6%						22.5%			27%	18%
Maximum Green (s)		72.0						28.5			35.0	19.7
Yellow Time (s)		5.2						3.6			3.5	3.1
All-Red Time (s)		3.8						3.9			4.5	5.2
Lost Time Adjust (s)		0.0						0.0				
Total Lost Time (s)		9.0						7.5				
Lead/Lag		Lead						Lag				Lag
Lead-Lag Optimize?		Yes						Yes				Yes
Vehicle Extension (s)		6.0						2.0			2.0	2.0
Minimum Gap (s)		3.0						0.2			0.2	0.2
Time Before Reduce (s)		15.0						0.0			0.0	0.0
Time To Reduce (s)		30.0						0.0			0.0	0.0
Recall Mode		C-Max						None			None	None
Act Effct Green (s)		72.0			160.0	160.0		28.5				
Actuated g/C Ratio		0.45			1.00	1.00		0.18				
v/c Ratio		1.23			0.49	0.74		1.26				
Control Delay		135.6			0.0	6.3		182.9				
Queue Delay		0.1			0.1	0.0		0.6				
Total Delay		135.8			0.1	6.3		183.5				
LOS		F			A	A		F				
Approach Delay		135.8			2.5		183.5					
Approach LOS		F			A		F					
Queue Length 50th (ft)		~1316			0	750		~452				
Queue Length 95th (ft)		m#1113			m0	m0		#592				
Internal Link Dist (ft)		338			513		316		384			
Turn Bay Length (ft)						275						
Base Capacity (vph)		1561			3471	1442		486				
Starvation Cap Reductn		68			0	0		0				
Spillback Cap Reductn		12			429	0		34				
Storage Cap Reductn		0			0	0		0				
Reduced v/c Ratio		1.28			0.56	0.74		1.35				

Intersection Summary			
Area Type:	Other		
Cycle Length: 160			
Actuated Cycle Length: 160			
Offset: 0 (0%), Referenced to phase 2:EBT and 6:WBT, Start of Green, Master Intersection			
Natural Cycle: 150			
Control Type: Actuated-Coordinated			
Maximum v/c Ratio: 1.27			
Intersection Signal Delay: 71.7		Intersection LOS: E	
Intersection Capacity Utilization 80.6%		ICU Level of Service D	
Analysis Period (min) 15			

DocuSign Envelope ID: 5C03745C-4B01-4834-A65D-B77F558A4F46

Lane Group	Ø6	Ø8
Permitted Phases		
Detector Phase		
Switch Phase		
Minimum Initial (s)	12.0	7.0
Minimum Split (s)	21.0	15.0
Total Split (s)	89.0	43.0
Total Split (%)	56%	27%
Maximum Green (s)	80.0	35.0
Yellow Time (s)	5.2	3.5
All-Red Time (s)	3.8	4.5
Lost Time Adjust (s)		
Total Lost Time (s)		
Lead/Lag	Lead	
Lead-Lag Optimize?	Yes	
Vehicle Extension (s)	6.0	2.0
Minimum Gap (s)	3.0	0.2
Time Before Reduce (s)	15.0	0.0
Time To Reduce (s)	30.0	0.0
Recall Mode	C-Max	None
Act Effct Green (s)		
Actuated g/C Ratio		
v/c Ratio		
Control Delay		
Queue Delay		
Total Delay		
LOS		
Approach Delay		
Approach LOS		
Queue Length 50th (ft)		
Queue Length 95th (ft)		
Internal Link Dist (ft)		
Turn Bay Length (ft)		
Base Capacity (vph)		
Starvation Cap Reductn		
Spillback Cap Reductn		
Storage Cap Reductn		
Reduced v/c Ratio		

Intersection Summary

DocuSign Envelope ID: 5C03745C-4B01-4834-A65D-B77F558A4F46

~ Volume exceeds capacity, queue is theoretically infinite.
Queue shown is maximum after two cycles.
95th percentile volume exceeds capacity, queue may be longer.
Queue shown is maximum after two cycles.
m Volume for 95th percentile queue is metered by upstream signal.

Splits and Phases: 11: I-26 NWB Ramp & NC 146 (Long Shoals Rd)

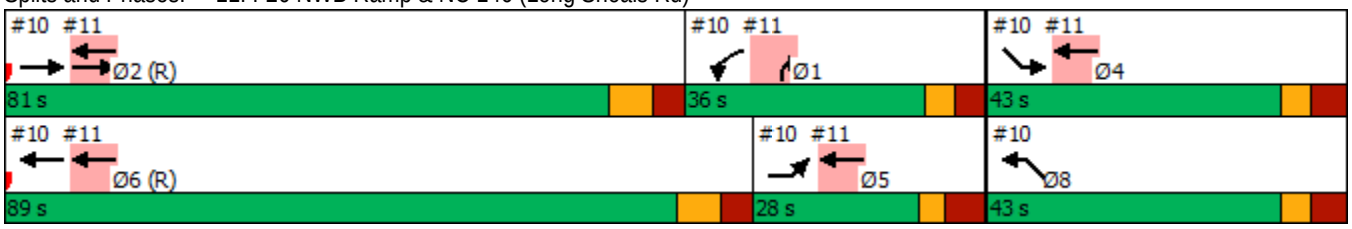

DocuSign Envelope ID: 5C03745C-4B01-4834-A65D-B77F558A4F46

Lane Group	EBL	EBT	EBR	WBL	WBT	WBR	NBL	NBT	NBR	SBL	SBT	SBR
Lane Configurations												
Traffic Volume (vph)	701	1504	67	17	1542	462	84	41	20	509	40	861
Future Volume (vph)	701	1504	67	17	1542	462	84	41	20	509	40	861
Ideal Flow (vphpl)	1900	1900	1900	1900	1900	1900	1900	1900	1900	1900	1900	1900
Grade (%)		6%			-6%			11%			7%	
Storage Length (ft)	350		400	250		225	0		0	450		0
Storage Lanes	2		1	1		1	0		0	1		1
Taper Length (ft)	25			25			25			25		
Lane Util. Factor	0.97	0.95	1.00	1.00	0.95	1.00	1.00	1.00	1.00	0.95	0.95	1.00
Frt			0.850			0.850		0.982				0.850
Flt Protected	0.950			0.950				0.972		0.950	0.959	
Satd. Flow (prot)	3266	3367	1506	1788	3575	1599	0	1632	0	1561	1576	1470
Flt Permitted	0.950			0.950				0.972		0.950	0.959	
Satd. Flow (perm)	3266	3367	1506	1788	3575	1599	0	1632	0	1561	1576	1470
Right Turn on Red			No			No			No			No
Satd. Flow (RTOR)												
Link Speed (mph)		45			45			25			25	
Link Distance (ft)		593			1582			722			992	
Travel Time (s)		9.0			24.0			19.7			27.1	
Peak Hour Factor	0.90	0.90	0.90	0.90	0.90	0.90	0.90	0.90	0.90	0.90	0.90	0.90
Heavy Vehicles (%)	4%	4%	4%	4%	4%	4%	5%	5%	5%	6%	6%	6%
Adj. Flow (vph)	779	1671	74	19	1713	513	93	46	22	566	44	957
Shared Lane Traffic (%)										46%		
Lane Group Flow (vph)	779	1671	74	19	1713	513	0	161	0	306	304	957
Enter Blocked Intersection	No	No	No	No	No	No	No	No	No	No	No	No
Lane Alignment	Left	Left	Right	Left	Left	Right	Left	Left	Right	Left	Left	Right
Median Width(ft)		24			24			0			12	
Link Offset(ft)		0			0			0			0	
Crosswalk Width(ft)		16			16			16			16	
Two way Left Turn Lane												
Headway Factor	1.04	1.04	1.04	0.96	0.96	0.96	1.08	1.08	1.08	1.05	1.05	1.05
Turning Speed (mph)	15		9	15		9	15		9	15		9
Number of Detectors	1	2	1	1	2	1	1	2		1	2	1
Detector Template	Left	Thru	Right	Left	Thru	Right	Left	Thru		Left	Thru	Right
Leading Detector (ft)	20	100	20	20	100	20	20	100		20	100	20
Trailing Detector (ft)	0	0	0	0	0	0	0	0		0	0	0
Detector 1 Position(ft)	0	0	0	0	0	0	0	0		0	0	0
Detector 1 Size(ft)	20	6	20	20	6	20	20	6		20	6	20
Detector 1 Type	Cl+Ex	Cl+Ex	Cl+Ex	Cl+Ex	Cl+Ex	Cl+Ex	Cl+Ex	Cl+Ex		Cl+Ex	Cl+Ex	Cl+Ex
Detector 1 Channel												
Detector 1 Extend (s)	0.0	0.0	0.0	0.0	0.0	0.0	0.0	0.0		0.0	0.0	0.0
Detector 1 Queue (s)	0.0	0.0	0.0	0.0	0.0	0.0	0.0	0.0		0.0	0.0	0.0
Detector 1 Delay (s)	0.0	0.0	0.0	0.0	0.0	0.0	0.0	0.0		0.0	0.0	0.0
Detector 2 Position(ft)		94			94			94			94	
Detector 2 Size(ft)		6			6			6			6	
Detector 2 Type		Cl+Ex			Cl+Ex			Cl+Ex			Cl+Ex	
Detector 2 Channel												
Detector 2 Extend (s)		0.0			0.0			0.0			0.0	
Turn Type	Prot	NA	pm+ov	Prot	NA	pm+ov	Split	NA		Split	NA	pm+ov

DocuSign Envelope ID: 5C03745C-4B01-4834-A65D-B77F558A4F46

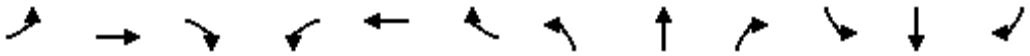

Lane Group	EBL	EBT	EBR	WBL	WBT	WBR	NBL	NBT	NBR	SBL	SBT	SBR
Protected Phases	5	2	4	1	6	3	4	4		3	3	5
Permitted Phases			2			6						3
Detector Phase	5	2	4	1	6	3	4	4		3	3	5
Switch Phase												
Minimum Initial (s)	7.0	12.0	7.0	7.0	12.0	7.0	7.0	7.0		7.0	7.0	7.0
Minimum Split (s)	13.3	20.7	39.3	13.3	32.6	13.4	39.3	39.3		13.4	13.4	13.3
Total Split (s)	49.0	99.0	18.0	14.0	64.0	29.0	18.0	18.0		29.0	29.0	49.0
Total Split (%)	30.6%	61.9%	11.3%	8.8%	40.0%	18.1%	11.3%	11.3%		18.1%	18.1%	30.6%
Maximum Green (s)	42.7	93.3	11.7	7.7	57.4	22.6	11.7	11.7		22.6	22.6	42.7
Yellow Time (s)	3.0	4.1	3.0	3.1	5.1	3.0	3.0	3.0		3.0	3.0	3.0
All-Red Time (s)	3.3	1.6	3.3	3.2	1.5	3.4	3.3	3.3		3.4	3.4	3.3
Lost Time Adjust (s)	-1.3	-0.7	-1.3	-1.3	-1.6	-1.4		-1.3		-1.4	-1.4	-1.3
Total Lost Time (s)	5.0	5.0	5.0	5.0	5.0	5.0		5.0		5.0	5.0	5.0
Lead/Lag	Lag	Lead	Lead	Lag	Lead	Lag	Lead	Lead		Lag	Lag	Lag
Lead-Lag Optimize?	Yes	Yes	Yes	Yes	Yes	Yes	Yes	Yes		Yes	Yes	Yes
Vehicle Extension (s)	3.0	6.0	3.0	2.0	6.0	3.0	3.0	3.0		3.0	3.0	3.0
Minimum Gap (s)	0.2	3.0	0.2	0.2	3.0	0.2	0.2	0.2		0.2	0.2	0.2
Time Before Reduce (s)	0.0	20.0	0.0	0.0	20.0	0.0	0.0	0.0		0.0	0.0	0.0
Time To Reduce (s)	0.0	30.0	0.0	0.0	30.0	0.0	0.0	0.0		0.0	0.0	0.0
Recall Mode	None	C-Max	None	None	C-Max	None	None	None		None	None	None
Walk Time (s)		7.0	7.0		7.0		7.0	7.0				
Flash Dont Walk (s)		8.0	26.0		19.0		26.0	26.0				
Pedestrian Calls (#/hr)		0	0		0		0	0				
Act Effct Green (s)	44.0	99.6	114.6	8.7	59.0	88.0		13.0		24.0	24.0	68.0
Actuated g/C Ratio	0.28	0.62	0.72	0.05	0.37	0.55		0.08		0.15	0.15	0.42
v/c Ratio	0.87	0.80	0.07	0.20	1.30	0.58		1.22		1.31	1.29	1.53
Control Delay	44.7	12.5	2.2	77.1	181.1	27.2		206.4		216.0	208.7	275.0
Queue Delay	0.0	3.9	0.0	0.0	0.0	0.0		0.0		0.0	0.0	0.0
Total Delay	44.7	16.4	2.2	77.1	181.1	27.2		206.4		216.0	208.7	275.0
LOS	D	B	A	E	F	C		F		F	F	F
Approach Delay		24.7			145.0			206.4			250.6	
Approach LOS		C			F			F			F	
Queue Length 50th (ft)	431	247	5	19	~1202	347		~205		~430	~424	~1243
Queue Length 95th (ft)	m310	m200	m4	50	#1337	466		#364		#641	#633	#1659
Internal Link Dist (ft)		513			1502			642			912	
Turn Bay Length (ft)	350		400	250		225				450		
Base Capacity (vph)	898	2096	1078	100	1318	879		132		234	236	624
Starvation Cap Reductn	0	340	0	0	0	0		0		0	0	0
Spillback Cap Reductn	0	0	0	0	0	0		0		0	0	0
Storage Cap Reductn	0	0	0	0	0	0		0		0	0	0
Reduced v/c Ratio	0.87	0.95	0.07	0.19	1.30	0.58		1.22		1.31	1.29	1.53

Intersection Summary	
Area Type:	Other
Cycle Length: 160	
Actuated Cycle Length: 160	
Offset: 146 (91%), Referenced to phase 2:EBT and 6:WBT, Start of Green	
Natural Cycle: 150	
Control Type: Actuated-Coordinated	

DocuSign Envelope ID: 5C03745C-4B01-4834-A65D-B77F558A4F46

Maximum v/c Ratio: 1.53	
Intersection Signal Delay: 125.3	Intersection LOS: F
Intersection Capacity Utilization 116.5%	ICU Level of Service H
Analysis Period (min) 15	

~ Volume exceeds capacity, queue is theoretically infinite.
Queue shown is maximum after two cycles.

95th percentile volume exceeds capacity, queue may be longer.
Queue shown is maximum after two cycles.

m Volume for 95th percentile queue is metered by upstream signal.

Splits and Phases: 12: Skyland Inn Dr/Schenck Pkwy & NC 146 (Long Shoals Rd)

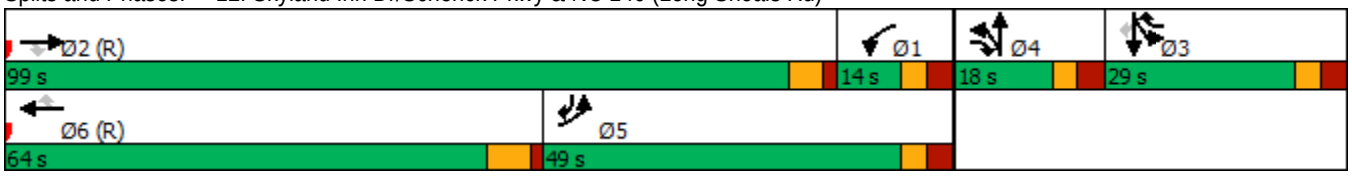

DocuSign Envelope ID: 5C03745C-4B01-4834-A65D-B77F558A4F46

Appendix Q – 2045 Build Scenario 2 Synchro Results

Note that the report describes the directions of I-26 as they are signed (eastbound and westbound) while the Synchro files use ordinal direction of the ramps in the description. For clarification, southeast-bound ramps enter or exit from eastbound I-26 while northwest-bound ramps enter or exit from I-26 westbound.

DocuSign Envelope ID: 5C03745C-4B01-4834-A65D-B77F558A4F46

2045 Build - Scenario 2 - AM

DocuSign Envelope ID: 5C03745C-4B01-4834-A65D-B77F558A4F46

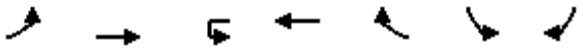

Lane Group	EBL	EBT	WBU	WBT	WBR	SBL	SBR
Lane Configurations							
Traffic Volume (vph)	63	1022	0	1128	90	114	89
Future Volume (vph)	63	1022	0	1128	90	114	89
Ideal Flow (vphpl)	1900	1900	1900	1900	1900	1900	1900
Storage Length (ft)	150		150		175	0	175
Storage Lanes	1		1		1	1	1
Taper Length (ft)	25		25			25	
Lane Util. Factor	1.00	0.95	1.00	0.95	1.00	1.00	1.00
Frt					0.850		0.850
Flt Protected	0.950					0.950	
Satd. Flow (prot)	1703	3406	1792	3406	1524	1703	1524
Flt Permitted	0.950					0.950	
Satd. Flow (perm)	1703	3406	1792	3406	1524	1703	1524
Right Turn on Red					No		No
Satd. Flow (RTOR)							
Link Speed (mph)		45		45		25	
Link Distance (ft)		1606		558		1108	
Travel Time (s)		24.3		8.5		30.2	
Peak Hour Factor	0.90	0.90	0.90	0.90	0.90	0.90	0.90
Heavy Vehicles (%)	6%	6%	6%	6%	6%	6%	6%
Adj. Flow (vph)	70	1136	0	1253	100	127	99
Shared Lane Traffic (%)							
Lane Group Flow (vph)	70	1136	0	1253	100	127	99
Enter Blocked Intersection	No	No	No	No	No	No	No
Lane Alignment	Left	Left	R NA	Left	Right	Left	Right
Median Width(ft)		12		12		12	
Link Offset(ft)		0		0		0	
Crosswalk Width(ft)		16		16		16	
Two way Left Turn Lane							
Headway Factor	1.00	1.00	1.00	1.00	1.00	1.00	1.00
Turning Speed (mph)	15		9		9	15	9
Number of Detectors	1	2	1	2	1	1	1
Detector Template	Left	Thru	Left	Thru	Right	Left	Right
Leading Detector (ft)	20	100	20	100	20	20	20
Trailing Detector (ft)	0	0	0	0	0	0	0
Detector 1 Position(ft)	0	0	0	0	0	0	0
Detector 1 Size(ft)	20	6	20	6	20	20	20
Detector 1 Type	Cl+Ex	Cl+Ex	Cl+Ex	Cl+Ex	Cl+Ex	Cl+Ex	Cl+Ex
Detector 1 Channel							
Detector 1 Extend (s)	0.0	0.0	0.0	0.0	0.0	0.0	0.0
Detector 1 Queue (s)	0.0	0.0	0.0	0.0	0.0	0.0	0.0
Detector 1 Delay (s)	0.0	0.0	0.0	0.0	0.0	0.0	0.0
Detector 2 Position(ft)		94		94			
Detector 2 Size(ft)		6		6			
Detector 2 Type		Cl+Ex		Cl+Ex			
Detector 2 Channel							
Detector 2 Extend (s)		0.0		0.0			
Turn Type	Prot	NA	Prot	NA	pm+ov	Prot	pm+ov
Protected Phases	5	2	1	6	4	4	5

DocuSign Envelope ID: 5C03745C-4B01-4834-A65D-B77F558A4F46

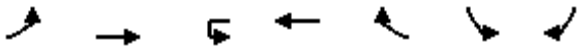

Lane Group	EBL	EBT	WBU	WBT	WBR	SBL	SBR
Permitted Phases					6		4
Detector Phase	5	2	1	6	4	4	5
Switch Phase							
Minimum Initial (s)	7.0	12.0	7.0	12.0	7.0	7.0	7.0
Minimum Split (s)	13.1	18.8	11.9	35.8	36.5	36.5	13.1
Total Split (s)	16.0	71.0	12.0	67.0	37.0	37.0	16.0
Total Split (%)	13.3%	59.2%	10.0%	55.8%	30.8%	30.8%	13.3%
Maximum Green (s)	9.9	64.2	7.1	60.2	30.5	30.5	9.9
Yellow Time (s)	3.0	4.9	3.0	4.9	3.0	3.0	3.0
All-Red Time (s)	3.1	1.9	1.9	1.9	3.5	3.5	3.1
Lost Time Adjust (s)	-1.1	-1.8	0.1	-1.8	-1.8	-1.5	-1.1
Total Lost Time (s)	5.0	5.0	5.0	5.0	4.7	5.0	5.0
Lead/Lag	Lag	Lag	Lead	Lead			Lag
Lead-Lag Optimize?	Yes	Yes	Yes	Yes			Yes
Vehicle Extension (s)	2.0	6.0	2.0	6.0	2.0	2.0	2.0
Minimum Gap (s)	0.2	3.0	0.2	3.0	0.2	0.2	0.2
Time Before Reduce (s)	0.0	15.0	0.0	15.0	0.0	0.0	0.0
Time To Reduce (s)	0.0	30.0	0.0	30.0	0.0	0.0	0.0
Recall Mode	None	C-Max	None	C-Max	None	None	None
Walk Time (s)				7.0	7.0	7.0	
Flash Dont Walk (s)				22.0	23.0	23.0	
Pedestrian Calls (#/hr)				0	0	0	
Act Effct Green (s)	11.0	95.1		79.1	99.3	14.9	30.9
Actuated g/C Ratio	0.09	0.79		0.66	0.83	0.12	0.26
v/c Ratio	0.45	0.42		0.56	0.08	0.60	0.25
Control Delay	61.4	4.8		9.2	1.2	61.1	36.0
Queue Delay	0.0	0.0		0.2	0.0	0.0	0.0
Total Delay	61.4	4.8		9.4	1.2	61.1	36.0
LOS	E	A		A	A	E	D
Approach Delay		8.1		8.8		50.1	
Approach LOS		A		A		D	
Queue Length 50th (ft)	52	117		204	6	94	61
Queue Length 95th (ft)	102	187		320	m11	152	103
Internal Link Dist (ft)		1526		478		1028	
Turn Bay Length (ft)	150				175		175
Base Capacity (vph)	156	2699		2245	1261	454	392
Starvation Cap Reductn	0	0		294	0	0	0
Spillback Cap Reductn	0	66		0	0	0	0
Storage Cap Reductn	0	0		0	0	0	0
Reduced v/c Ratio	0.45	0.43		0.64	0.08	0.28	0.25

Intersection Summary	
Area Type:	Other
Cycle Length: 120	
Actuated Cycle Length: 120	
Offset: 28 (23%), Referenced to phase 2:EBT and 6:WBT, Start of Green	
Natural Cycle: 90	
Control Type: Actuated-Coordinated	
Maximum v/c Ratio: 0.60	

DocuSign Envelope ID: 5C03745C-4B01-4834-A65D-B77F558A4F46

Intersection Signal Delay: 11.8	Intersection LOS: B
Intersection Capacity Utilization 55.8%	ICU Level of Service B
Analysis Period (min) 15	

m Volume for 95th percentile queue is metered by upstream signal.

Splits and Phases: 1: NC 191 (Brevard Rd) & Commercial Access

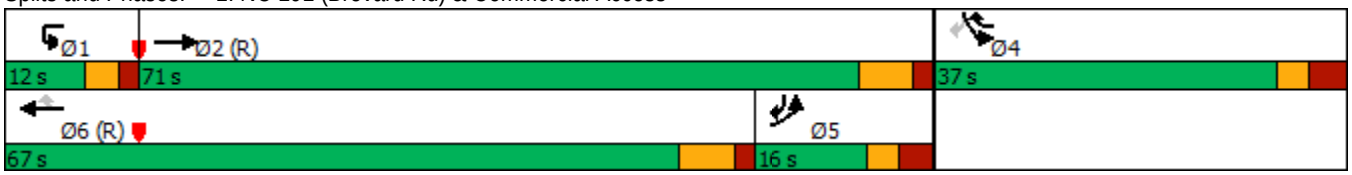

DocuSign Envelope ID: 5C03745C-4B01-4834-A65D-B77F558A4F46

Lane Group	EBT	EBR	WBL	WBT	NBL	NBR
Lane Configurations						
Traffic Volume (vph)	987	149	265	908	310	74
Future Volume (vph)	987	149	265	908	310	74
Ideal Flow (vphpl)	1900	1900	1900	1900	1900	1900
Grade (%)	-1%			-1%	0%	
Storage Length (ft)		225	200		0	0
Storage Lanes		1	1		2	1
Taper Length (ft)			25		25	
Lane Util. Factor	0.95	1.00	1.00	0.95	0.97	1.00
Frt		0.850				0.850
Flt Protected			0.950		0.950	
Satd. Flow (prot)	3423	1449	1620	3423	3303	1524
Flt Permitted			0.950		0.950	
Satd. Flow (perm)	3423	1449	1620	3423	3303	1524
Right Turn on Red		No				Yes
Satd. Flow (RTOR)						36
Link Speed (mph)	45			45	45	
Link Distance (ft)	558			1204	323	
Travel Time (s)	8.5			18.2	4.9	
Peak Hour Factor	0.90	0.90	0.90	0.90	0.90	0.90
Heavy Vehicles (%)	6%	12%	12%	6%	6%	6%
Adj. Flow (vph)	1097	166	294	1009	344	82
Shared Lane Traffic (%)						
Lane Group Flow (vph)	1097	166	294	1009	344	82
Enter Blocked Intersection	No	No	No	No	No	No
Lane Alignment	Left	Right	Left	Left	Left	Right
Median Width(ft)	12			12	40	
Link Offset(ft)	0			0	0	
Crosswalk Width(ft)	16			16	16	
Two way Left Turn Lane						
Headway Factor	0.99	0.99	0.99	0.99	1.00	1.00
Turning Speed (mph)		9	15		15	9
Number of Detectors	2	1	1	2	1	1
Detector Template	Thru	Right	Left	Thru	Left	Right
Leading Detector (ft)	100	20	20	100	20	20
Trailing Detector (ft)	0	0	0	0	0	0
Detector 1 Position(ft)	0	0	0	0	0	0
Detector 1 Size(ft)	6	20	20	6	20	20
Detector 1 Type	Cl+Ex	Cl+Ex	Cl+Ex	Cl+Ex	Cl+Ex	Cl+Ex
Detector 1 Channel						
Detector 1 Extend (s)	0.0	0.0	0.0	0.0	0.0	0.0
Detector 1 Queue (s)	0.0	0.0	0.0	0.0	0.0	0.0
Detector 1 Delay (s)	0.0	0.0	0.0	0.0	0.0	0.0
Detector 2 Position(ft)	94			94		
Detector 2 Size(ft)	6			6		
Detector 2 Type	Cl+Ex			Cl+Ex		
Detector 2 Channel						
Detector 2 Extend (s)	0.0			0.0		
Turn Type	NA	pm+ov	Prot	NA	Prot	pm+ov

DocuSign Envelope ID: 5C03745C-4B01-4834-A65D-B77F558A4F46



Lane Group	EBT	EBR	WBL	WBT	NBL	NBR
Protected Phases	2	4	1	6	4	1
Permitted Phases		2				4
Detector Phase	2	4	1	6	4	1
Switch Phase						
Minimum Initial (s)	12.0	7.0	10.0	12.0	7.0	10.0
Minimum Split (s)	18.0	13.9	16.3	18.6	13.9	16.3
Total Split (s)	57.0	24.0	39.0	96.0	24.0	39.0
Total Split (%)	47.5%	20.0%	32.5%	80.0%	20.0%	32.5%
Maximum Green (s)	51.0	17.1	32.7	89.4	17.1	32.7
Yellow Time (s)	4.4	3.0	3.0	4.7	3.0	3.0
All-Red Time (s)	1.6	3.9	3.3	1.9	3.9	3.3
Lost Time Adjust (s)	-1.0	-1.9	-1.3	-1.6	-1.9	-1.9
Total Lost Time (s)	5.0	5.0	5.0	5.0	5.0	4.4
Lead/Lag	Lead		Lag			Lag
Lead-Lag Optimize?	Yes		Yes			Yes
Vehicle Extension (s)	6.0	5.0	2.5	6.0	5.0	2.5
Minimum Gap (s)	3.0	0.2	0.2	3.0	0.2	0.2
Time Before Reduce (s)	15.0	0.0	0.0	15.0	0.0	0.0
Time To Reduce (s)	30.0	0.0	0.0	30.0	0.0	0.0
Recall Mode	C-Max	None	None	C-Max	None	None
Act Effct Green (s)	52.4	76.0	34.0	91.4	18.6	58.2
Actuated g/C Ratio	0.44	0.63	0.28	0.76	0.16	0.48
v/c Ratio	0.73	0.18	0.64	0.39	0.67	0.11
Control Delay	27.9	8.6	25.5	4.0	55.1	10.3
Queue Delay	0.3	0.0	0.0	0.0	0.0	0.0
Total Delay	28.2	8.6	25.5	4.0	55.1	10.3
LOS	C	A	C	A	E	B
Approach Delay	25.7			8.9	46.5	
Approach LOS	C			A	D	
Queue Length 50th (ft)	382	44	203	79	130	18
Queue Length 95th (ft)	465	72	302	89	181	47
Internal Link Dist (ft)	478			1124	243	
Turn Bay Length (ft)		225	200			
Base Capacity (vph)	1496	910	459	2608	522	757
Starvation Cap Reductn	87	0	0	0	0	0
Spillback Cap Reductn	0	0	0	0	0	0
Storage Cap Reductn	0	0	0	0	0	0
Reduced v/c Ratio	0.78	0.18	0.64	0.39	0.66	0.11

Intersection Summary			
Area Type:	Other		
Cycle Length: 120			
Actuated Cycle Length: 120			
Offset: 4 (3%), Referenced to phase 2:EBT and 6:WBT, Start of Green			
Natural Cycle: 60			
Control Type: Actuated-Coordinated			
Maximum v/c Ratio: 0.73			
Intersection Signal Delay: 21.3		Intersection LOS: C	
Intersection Capacity Utilization 63.3%		ICU Level of Service B	

DocuSign Envelope ID: 5C03745C-4B01-4834-A65D-B77F558A4F46

Analysis Period (min) 15

Splits and Phases: 2: I-26 SEB Ramps & NC 191 (Brevard Rd)

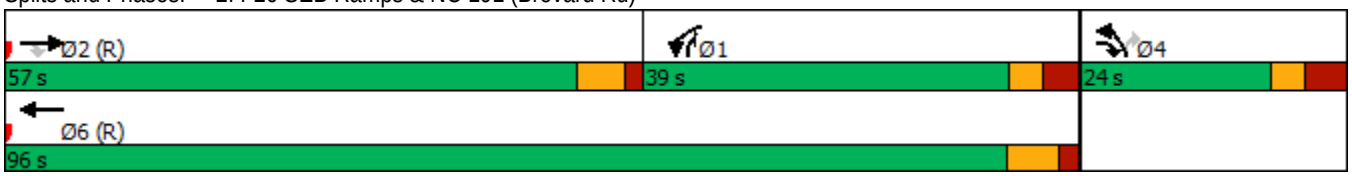

DocuSign Envelope ID: 5C03745C-4B01-4834-A65D-B77F558A4F46

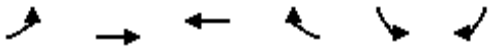

Lane Group	EBL	EBT	WBT	WBR	SBL	SBR
Lane Configurations						
Traffic Volume (vph)	214	847	979	47	373	194
Future Volume (vph)	214	847	979	47	373	194
Ideal Flow (vphpl)	1900	1900	1900	1900	1900	1900
Grade (%)		2%	-2%		2%	
Storage Length (ft)	625			200	0	400
Storage Lanes	2			1	2	1
Taper Length (ft)	25				25	
Lane Util. Factor	0.97	0.95	0.95	1.00	0.97	1.00
Frt				0.850		0.850
Flt Protected	0.950				0.950	
Satd. Flow (prot)	3095	3340	3408	1456	3240	1494
Flt Permitted	0.950				0.950	
Satd. Flow (perm)	3095	3340	3408	1456	3240	1494
Right Turn on Red				No		No
Satd. Flow (RTOR)						
Link Speed (mph)		45	45		45	
Link Distance (ft)		802	1565		860	
Travel Time (s)		12.2	23.7		13.0	
Peak Hour Factor	0.90	0.90	0.90	0.90	0.90	0.90
Heavy Vehicles (%)	12%	7%	7%	12%	7%	7%
Adj. Flow (vph)	238	941	1088	52	414	216
Shared Lane Traffic (%)						
Lane Group Flow (vph)	238	941	1088	52	414	216
Enter Blocked Intersection	No	No	No	No	No	No
Lane Alignment	Left	Left	Left	Right	Left	Right
Median Width(ft)		24	12		36	
Link Offset(ft)		0	0		0	
Crosswalk Width(ft)		16	16		16	
Two way Left Turn Lane						
Headway Factor	1.01	1.01	0.99	0.99	1.01	1.01
Turning Speed (mph)	15			9	15	9
Number of Detectors	1	2	2	1	1	1
Detector Template	Left	Thru	Thru	Right	Left	Right
Leading Detector (ft)	20	100	100	20	20	20
Trailing Detector (ft)	0	0	0	0	0	0
Detector 1 Position(ft)	0	0	0	0	0	0
Detector 1 Size(ft)	20	6	6	20	20	20
Detector 1 Type	Cl+Ex	Cl+Ex	Cl+Ex	Cl+Ex	Cl+Ex	Cl+Ex
Detector 1 Channel						
Detector 1 Extend (s)	0.0	0.0	0.0	0.0	0.0	0.0
Detector 1 Queue (s)	0.0	0.0	0.0	0.0	0.0	0.0
Detector 1 Delay (s)	0.0	0.0	0.0	0.0	0.0	0.0
Detector 2 Position(ft)		94	94			
Detector 2 Size(ft)		6	6			
Detector 2 Type		Cl+Ex	Cl+Ex			
Detector 2 Channel						
Detector 2 Extend (s)		0.0	0.0			
Turn Type	Prot	NA	NA	pm+ov	Prot	pm+ov

DocuSign Envelope ID: 5C03745C-4B01-4834-A65D-B77F558A4F46

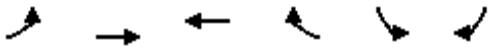

Lane Group	EBL	EBT	WBT	WBR	SBL	SBR
Protected Phases	5	2	6	4	4	5
Permitted Phases				6		4
Detector Phase	5	2	6	4	4	5
Switch Phase						
Minimum Initial (s)	7.0	12.0	12.0	7.0	7.0	7.0
Minimum Split (s)	14.0	19.0	25.0	25.0	25.0	14.0
Total Split (s)	23.0	89.0	66.0	31.0	31.0	23.0
Total Split (%)	19.2%	74.2%	55.0%	25.8%	25.8%	19.2%
Maximum Green (s)	16.0	82.0	59.0	24.0	24.0	16.0
Yellow Time (s)	5.0	5.0	5.0	5.0	5.0	5.0
All-Red Time (s)	2.0	2.0	2.0	2.0	2.0	2.0
Lost Time Adjust (s)	-2.0	-2.0	-2.0	-2.0	-2.0	-2.0
Total Lost Time (s)	5.0	5.0	5.0	5.0	5.0	5.0
Lead/Lag	Lag		Lead			Lag
Lead-Lag Optimize?	Yes		Yes			Yes
Vehicle Extension (s)	3.0	3.0	3.0	3.0	3.0	3.0
Minimum Gap (s)	0.2	3.0	3.0	0.2	0.2	0.2
Time Before Reduce (s)	0.0	15.0	15.0	0.0	0.0	0.0
Time To Reduce (s)	0.0	30.0	30.0	0.0	0.0	0.0
Recall Mode	None	C-Max	C-Max	None	None	None
Walk Time (s)			7.0	7.0	7.0	
Flash Dont Walk (s)			11.0	11.0	11.0	
Pedestrian Calls (#/hr)			0	0	0	
Act Effct Green (s)	18.0	87.8	64.8	92.0	22.2	45.2
Actuated g/C Ratio	0.15	0.73	0.54	0.77	0.18	0.38
v/c Ratio	0.51	0.39	0.59	0.05	0.69	0.38
Control Delay	21.2	1.4	20.8	3.5	51.9	29.0
Queue Delay	0.0	0.0	0.0	0.0	0.0	0.0
Total Delay	21.2	1.4	20.8	3.5	51.9	29.0
LOS	C	A	C	A	D	C
Approach Delay		5.4	20.0		44.0	
Approach LOS		A	B		D	
Queue Length 50th (ft)	90	18	289	8	155	120
Queue Length 95th (ft)	m113	27	381	17	202	179
Internal Link Dist (ft)		722	1485		780	
Turn Bay Length (ft)	625			200		400
Base Capacity (vph)	464	2444	1841	1104	702	562
Starvation Cap Reductn	0	0	0	0	0	0
Spillback Cap Reductn	0	0	0	0	0	0
Storage Cap Reductn	0	0	0	0	0	0
Reduced v/c Ratio	0.51	0.39	0.59	0.05	0.59	0.38

Intersection Summary	
Area Type:	Other
Cycle Length: 120	
Actuated Cycle Length: 120	
Offset: 2 (2%), Referenced to phase 2:EBT and 6:WBT, Start of Green	
Natural Cycle: 65	
Control Type: Actuated-Coordinated	

DocuSign Envelope ID: 5C03745C-4B01-4834-A65D-B77F558A4F46

Maximum v/c Ratio: 0.69	
Intersection Signal Delay: 19.3	Intersection LOS: B
Intersection Capacity Utilization 56.3%	ICU Level of Service B
Analysis Period (min) 15	

m Volume for 95th percentile queue is metered by upstream signal.

Splits and Phases: 3: NC 191 (Brevard Rd) & I-26 NWB Ramps

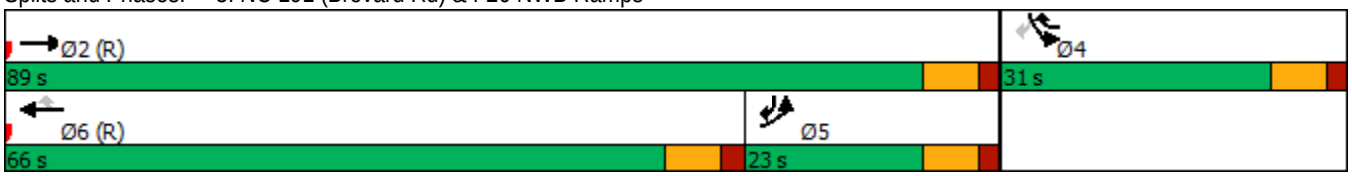

DocuSign Envelope ID: 5C03745C-4B01-4834-A65D-B77F558A4F46

Intersection	
Int Delay, s/veh	2.2

Movement	EBL	EBR	NBL	NBT	SBT	SBR
Lane Configurations						
Traffic Vol, veh/h	56	19	22	127	159	83
Future Vol, veh/h	56	19	22	127	159	83
Conflicting Peds, #/hr	0	0	0	0	0	0
Sign Control	Stop	Stop	Free	Free	Free	Free
RT Channelized	-	None	-	None	-	None
Storage Length	75	0	275	-	-	-
Veh in Median Storage, #	0	-	-	0	0	-
Grade, %	0	-	-	0	3	-
Peak Hour Factor	90	90	90	90	90	90
Heavy Vehicles, %	2	2	2	2	2	2
Mvmt Flow	62	21	24	141	177	92

Major/Minor	Minor2		Major1		Major2	
Conflicting Flow All	412	223	269	0	-	0
Stage 1	223	-	-	-	-	-
Stage 2	189	-	-	-	-	-
Critical Hdwy	6.42	6.22	4.12	-	-	-
Critical Hdwy Stg 1	5.42	-	-	-	-	-
Critical Hdwy Stg 2	5.42	-	-	-	-	-
Follow-up Hdwy	3.518	3.318	2.218	-	-	-
Pot Cap-1 Maneuver	596	817	1295	-	-	-
Stage 1	814	-	-	-	-	-
Stage 2	843	-	-	-	-	-
Platoon blocked, %				-	-	-
Mov Cap-1 Maneuver	585	817	1295	-	-	-
Mov Cap-2 Maneuver	585	-	-	-	-	-
Stage 1	799	-	-	-	-	-
Stage 2	843	-	-	-	-	-

Approach	EB	NB	SB
HCM Control Delay, s	11.3	1.2	0
HCM LOS	B		

Minor Lane/Major Mvmt	NBL	NBT	EBLn1	EBLn2	SBT	SBR
Capacity (veh/h)	1295	-	585	817	-	-
HCM Lane V/C Ratio	0.019	-	0.106	0.026	-	-
HCM Control Delay (s)	7.8	-	11.9	9.5	-	-
HCM Lane LOS	A	-	B	A	-	-
HCM 95th %tile Q(veh)	0.1	-	0.4	0.1	-	-

DocuSign Envelope ID: 5C03745C-4B01-4834-A65D-B77F558A4F46

Lane Group	EBL	EBT	EBR	WBL	WBT	WBR	NBL	NBT	NBR	SBL	SBT	SBR
Lane Configurations												
Traffic Volume (vph)	38	111	34	81	121	252	62	671	133	356	575	59
Future Volume (vph)	38	111	34	81	121	252	62	671	133	356	575	59
Ideal Flow (vphpl)	1900	1900	1900	1900	1900	1900	1900	1900	1900	1900	1900	1900
Grade (%)		3%			0%			2%			-7%	
Storage Length (ft)	0		0	200		0	175		150	200		0
Storage Lanes	1		0	1		1	1		1	2		0
Taper Length (ft)	25			25			25			25		
Lane Util. Factor	1.00	0.95	0.95	1.00	1.00	1.00	1.00	0.95	1.00	0.97	0.95	0.95
Frt		0.965				0.850			0.850		0.986	
Flt Protected	0.950			0.950			0.950			0.950		
Satd. Flow (prot)	1743	3364	0	1719	1810	1538	1686	3372	1508	3452	3509	0
Flt Permitted	0.950			0.950			0.950			0.950		
Satd. Flow (perm)	1743	3364	0	1719	1810	1538	1686	3372	1508	3452	3509	0
Right Turn on Red			No			No			No			No
Satd. Flow (RTOR)												
Link Speed (mph)		35			35			45			45	
Link Distance (ft)		248			1200			1589			1600	
Travel Time (s)		4.8			23.4			24.1			24.2	
Peak Hour Factor	0.90	0.90	0.90	0.90	0.90	0.90	0.90	0.90	0.90	0.90	0.90	0.90
Heavy Vehicles (%)	2%	2%	2%	5%	5%	5%	6%	6%	6%	5%	5%	5%
Adj. Flow (vph)	42	123	38	90	134	280	69	746	148	396	639	66
Shared Lane Traffic (%)												
Lane Group Flow (vph)	42	161	0	90	134	280	69	746	148	396	705	0
Enter Blocked Intersection	No	No	No	No	No	No	No	No	No	No	No	No
Lane Alignment	L NA	Left	Right	Left	Left	Left	Left	L NA	Right	Left	Left	Right
Median Width(ft)		12			12			24			24	
Link Offset(ft)		0			0			0			0	
Crosswalk Width(ft)		16			16			16			16	
Two way Left Turn Lane												
Headway Factor	1.02	1.02	1.02	1.00	1.00	1.00	1.01	1.01	1.01	0.96	0.96	0.96
Turning Speed (mph)	15		9	15		9	15		9	15		9
Number of Detectors	1	2		1	2	1	1	2	1	1	2	
Detector Template	Left	Thru		Left	Thru	Right	Left	Thru	Right	Left	Thru	
Leading Detector (ft)	20	100		20	100	20	20	100	20	20	100	
Trailing Detector (ft)	0	0		0	0	0	0	0	0	0	0	
Detector 1 Position(ft)	0	0		0	0	0	0	0	0	0	0	
Detector 1 Size(ft)	20	6		20	6	20	20	6	20	20	6	
Detector 1 Type	Cl+Ex	Cl+Ex		Cl+Ex	Cl+Ex	Cl+Ex	Cl+Ex	Cl+Ex	Cl+Ex	Cl+Ex	Cl+Ex	
Detector 1 Channel												
Detector 1 Extend (s)	0.0	0.0		0.0	0.0	0.0	0.0	0.0	0.0	0.0	0.0	
Detector 1 Queue (s)	0.0	0.0		0.0	0.0	0.0	0.0	0.0	0.0	0.0	0.0	
Detector 1 Delay (s)	0.0	0.0		0.0	0.0	0.0	0.0	0.0	0.0	0.0	0.0	
Detector 2 Position(ft)		94			94			94			94	
Detector 2 Size(ft)		6			6			6			6	
Detector 2 Type		Cl+Ex			Cl+Ex			Cl+Ex			Cl+Ex	
Detector 2 Channel												
Detector 2 Extend (s)		0.0			0.0			0.0			0.0	
Turn Type	Prot	NA		Prot	NA	pm+ov	Prot	NA	pm+ov	Prot	NA	

DocuSign Envelope ID: 5C03745C-4B01-4834-A65D-B77F558A4F46

Lane Group	EBL	EBT	EBR	WBL	WBT	WBR	NBL	NBT	NBR	SBL	SBT	SBR
Protected Phases	7	4		3	8	1	5	2	3	1	6	
Permitted Phases						8			2			
Detector Phase	7	4		3	8	1	5	2	3	1	6	
Switch Phase												
Minimum Initial (s)	7.0	7.0		7.0	7.0	7.0	7.0	12.0	7.0	7.0	12.0	
Minimum Split (s)	14.0	14.0		14.0	14.0	14.0	14.0	19.0	14.0	14.0	19.0	
Total Split (s)	16.0	20.0		20.0	24.0	29.0	17.0	51.0	20.0	29.0	63.0	
Total Split (%)	13.3%	16.7%		16.7%	20.0%	24.2%	14.2%	42.5%	16.7%	24.2%	52.5%	
Maximum Green (s)	9.0	13.0		13.0	17.0	22.0	10.0	44.0	13.0	22.0	56.0	
Yellow Time (s)	5.0	5.0		5.0	5.0	5.0	5.0	5.0	5.0	5.0	5.0	
All-Red Time (s)	2.0	2.0		2.0	2.0	2.0	2.0	2.0	2.0	2.0	2.0	
Lost Time Adjust (s)	-2.0	-2.0		-2.0	-2.0	-2.0	-2.0	-2.0	-2.0	-2.0	-2.0	
Total Lost Time (s)	5.0	5.0		5.0	5.0	5.0	5.0	5.0	5.0	5.0	5.0	
Lead/Lag	Lead	Lag		Lead	Lag	Lead	Lead	Lag	Lead	Lead	Lag	
Lead-Lag Optimize?	Yes	Yes		Yes	Yes	Yes	Yes	Yes	Yes	Yes	Yes	
Vehicle Extension (s)	3.0	3.0		3.0	3.0	3.0	3.0	3.0	3.0	3.0	3.0	
Minimum Gap (s)	3.0	3.0		3.0	3.0	3.0	3.0	3.0	3.0	3.0	3.0	
Time Before Reduce (s)	0.0	0.0		0.0	0.0	0.0	0.0	15.0	0.0	0.0	15.0	
Time To Reduce (s)	0.0	0.0		0.0	0.0	0.0	0.0	30.0	0.0	0.0	30.0	
Recall Mode	None	None		None	None	None	None	Min	None	None	Min	
Act Effct Green (s)	10.1	12.0		12.3	21.0	44.4	10.9	29.4	46.8	18.3	40.4	
Actuated g/C Ratio	0.11	0.13		0.13	0.23	0.48	0.12	0.32	0.51	0.20	0.44	
v/c Ratio	0.22	0.37		0.39	0.33	0.38	0.35	0.70	0.19	0.58	0.46	
Control Delay	46.4	42.4		46.3	38.9	20.6	47.9	32.1	13.9	38.9	20.8	
Queue Delay	0.0	0.0		0.0	0.0	0.0	0.0	0.0	0.0	0.0	0.0	
Total Delay	46.4	42.4		46.3	38.9	20.6	47.9	32.1	13.9	38.9	20.8	
LOS	D	D		D	D	C	D	C	B	D	C	
Approach Delay		43.2			30.1			30.4			27.3	
Approach LOS		D			C			C			C	
Queue Length 50th (ft)	23	45		48	71	113	37	196	44	107	160	
Queue Length 95th (ft)	66	92		114	154	221	95	304	92	186	231	
Internal Link Dist (ft)		168			1120			1509			1520	
Turn Bay Length (ft)				200			175		150	200		
Base Capacity (vph)	213	561		286	434	845	225	1725	814	922	2264	
Starvation Cap Reductn	0	0		0	0	0	0	0	0	0	0	
Spillback Cap Reductn	0	0		0	0	0	0	0	0	0	0	
Storage Cap Reductn	0	0		0	0	0	0	0	0	0	0	
Reduced v/c Ratio	0.20	0.29		0.31	0.31	0.33	0.31	0.43	0.18	0.43	0.31	

Intersection Summary			
Area Type:	Other		
Cycle Length: 120			
Actuated Cycle Length: 92.5			
Natural Cycle: 65			
Control Type: Actuated-Uncoordinated			
Maximum v/c Ratio: 0.70			
Intersection Signal Delay: 30.1		Intersection LOS: C	
Intersection Capacity Utilization 57.6%		ICU Level of Service B	
Analysis Period (min) 15			

DocuSign Envelope ID: 5C03745C-4B01-4834-A65D-B77F558A4F46

Splits and Phases: 5: NC 191 (Brevard Rd) & Blue Ridge Pkwy Access/NC 191 Connector

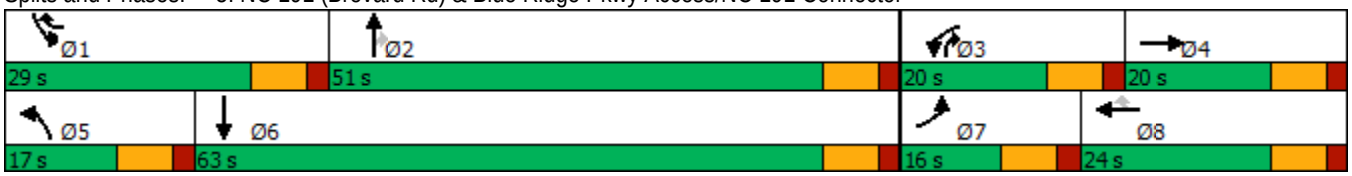

DocuSign Envelope ID: 5C03745C-4B01-4834-A65D-B77F558A4F46

Intersection	
Int Delay, s/veh	0

Movement	EBL	EBT	EBR	WBL	WBT	WBR	NBL	NBT	NBR	SBL	SBT	SBR
Lane Configurations		↑	↱		↰						↑	↱
Traffic Vol, veh/h	0	331	302	1	417	0	0	0	0	0	1	506
Future Vol, veh/h	0	331	302	1	417	0	0	0	0	0	1	506
Conflicting Peds, #/hr	0	0	0	0	0	0	0	0	0	0	0	0
Sign Control	Free	Free	Free	Free	Free	Free	Stop	Stop	Stop	Stop	Stop	Stop
RT Channelized	-	-	Yield	-	-	None	-	-	None	-	-	Yield
Storage Length	-	-	200	-	-	-	-	-	-	-	-	325
Veh in Median Storage, #	-	0	-	-	0	-	-	16974	-	-	0	-
Grade, %	-	0	-	-	0	-	-	0	-	-	0	-
Peak Hour Factor	90	90	90	90	90	90	90	90	90	90	90	90
Heavy Vehicles, %	2	5	12	12	5	2	2	2	2	2	12	5
Mvmt Flow	0	368	336	1	463	0	0	0	0	0	1	562

Major/Minor	Major1			Major2					Minor2			
Conflicting Flow All	-	0	0	368	0	0			-	833	463	
Stage 1	-	-	-	-	-	-			-	465	-	
Stage 2	-	-	-	-	-	-			-	368	-	
Critical Hdwy	-	-	-	4.22	-	-			-	6.62	6.25	
Critical Hdwy Stg 1	-	-	-	-	-	-			-	5.62	-	
Critical Hdwy Stg 2	-	-	-	-	-	-			-	5.62	-	
Follow-up Hdwy	-	-	-	2.308	-	-			-	4.108	3.345	
Pot Cap-1 Maneuver	0	-	-	1137	-	0			0	293	593	
Stage 1	0	-	-	-	-	0			0	546	-	
Stage 2	0	-	-	-	-	0			0	604	-	
Platoon blocked, %		-	-		-							
Mov Cap-1 Maneuver	-	-	-	1137	-	-			-	0	593	
Mov Cap-2 Maneuver	-	-	-	-	-	-			-	0	-	
Stage 1	-	-	-	-	-	-			-	0	-	
Stage 2	-	-	-	-	-	-			-	0	-	

Approach	EB	WB	SB
HCM Control Delay, s	0	0	
HCM LOS			-

Minor Lane/Major Mvmt	EBT	EBR	WBL	WBT	SBLn1	SBLn2
Capacity (veh/h)	-	-	1137	-	-	593
HCM Lane V/C Ratio	-	-	0.001	-	-	0.948
HCM Control Delay (s)	-	-	8.2	0	-	51.6
HCM Lane LOS	-	-	A	A	-	F
HCM 95th %tile Q(veh)	-	-	0	-	-	12.7

DocuSign Envelope ID: 5C03745C-4B01-4834-A65D-B77F558A4F46

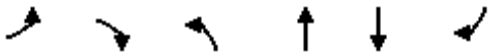

Lane Group	EBL	EBR	NBL	NBT	SBT	SBR
Lane Configurations						
Traffic Volume (vph)	331	0	417	1	0	0
Future Volume (vph)	331	0	417	1	0	0
Ideal Flow (vphpl)	1900	1900	1900	1900	1900	1900
Lane Util. Factor	1.00	1.00	1.00	1.00	1.00	1.00
Frt						
Flt Protected	0.950			0.952		
Satd. Flow (prot)	1612	0	0	1722	0	0
Flt Permitted	0.950			0.952		
Satd. Flow (perm)	1612	0	0	1722	0	0
Right Turn on Red		No				No
Satd. Flow (RTOR)						
Link Speed (mph)	35			45	45	
Link Distance (ft)	276			994	576	
Travel Time (s)	5.4			15.1	8.7	
Peak Hour Factor	0.90	0.90	0.90	0.90	0.90	0.90
Heavy Vehicles (%)	12%	2%	5%	12%	2%	2%
Adj. Flow (vph)	368	0	463	1	0	0
Shared Lane Traffic (%)						
Lane Group Flow (vph)	368	0	0	464	0	0
Enter Blocked Intersection	No	No	No	No	No	No
Lane Alignment	Left	Right	Left	Left	Left	Right
Median Width(ft)	12			0	0	
Link Offset(ft)	0			0	0	
Crosswalk Width(ft)	16			16	16	
Two way Left Turn Lane						
Headway Factor	1.00	1.00	1.00	1.00	1.00	1.00
Turning Speed (mph)	15	9	15			9
Number of Detectors	1		1	2		
Detector Template	Left		Left	Thru		
Leading Detector (ft)	20		20	100		
Trailing Detector (ft)	0		0	0		
Detector 1 Position(ft)	0		0	0		
Detector 1 Size(ft)	20		20	6		
Detector 1 Type	Cl+Ex		Cl+Ex	Cl+Ex		
Detector 1 Channel						
Detector 1 Extend (s)	0.0		0.0	0.0		
Detector 1 Queue (s)	0.0		0.0	0.0		
Detector 1 Delay (s)	0.0		0.0	0.0		
Detector 2 Position(ft)				94		
Detector 2 Size(ft)				6		
Detector 2 Type				Cl+Ex		
Detector 2 Channel						
Detector 2 Extend (s)				0.0		
Turn Type	Prot		Split	NA		
Protected Phases	2		4	4		
Permitted Phases						
Detector Phase	2		4	4		
Switch Phase						

DocuSign Envelope ID: 5C03745C-4B01-4834-A65D-B77F558A4F46

Lane Group	EBL	EBR	NBL	NBT	SBT	SBR
Minimum Initial (s)	10.0		7.0	7.0		
Minimum Split (s)	17.0		14.0	14.0		
Total Split (s)	29.0		31.0	31.0		
Total Split (%)	48.3%		51.7%	51.7%		
Maximum Green (s)	22.0		24.0	24.0		
Yellow Time (s)	5.0		5.0	5.0		
All-Red Time (s)	2.0		2.0	2.0		
Lost Time Adjust (s)	-2.0			-2.0		
Total Lost Time (s)	5.0			5.0		
Lead/Lag						
Lead-Lag Optimize?						
Vehicle Extension (s)	3.0		3.0	3.0		
Recall Mode	Min		None	None		
Act Effct Green (s)	18.2			19.7		
Actuated g/C Ratio	0.38			0.41		
v/c Ratio	0.61			0.66		
Control Delay	18.1			17.5		
Queue Delay	0.0			0.0		
Total Delay	18.1			17.5		
LOS	B			B		
Approach Delay	18.1			17.5		
Approach LOS	B			B		
Queue Length 50th (ft)	79			98		
Queue Length 95th (ft)	174			211		
Internal Link Dist (ft)	196			914	496	
Turn Bay Length (ft)						
Base Capacity (vph)	838			970		
Starvation Cap Reductn	0			0		
Spillback Cap Reductn	0			0		
Storage Cap Reductn	0			0		
Reduced v/c Ratio	0.44			0.48		

Intersection Summary			
Area Type:	Other		
Cycle Length: 60			
Actuated Cycle Length: 48.4			
Natural Cycle: 45			
Control Type: Actuated-Uncoordinated			
Maximum v/c Ratio: 0.66			
Intersection Signal Delay: 17.8		Intersection LOS: B	
Intersection Capacity Utilization 49.8%		ICU Level of Service A	
Analysis Period (min) 15			

Splits and Phases: 7: HE-0001 NWB Ramp & NC 191 Connector

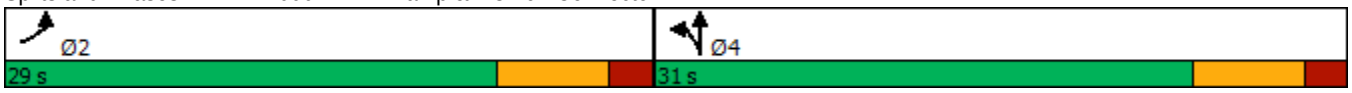

DocuSign Envelope ID: 5C03745C-4B01-4834-A65D-B77F558A4F46

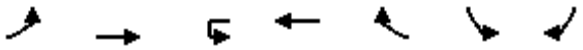

Lane Group	EBL	EBT	WBU	WBT	WBR	SBL	SBR
Lane Configurations							
Traffic Volume (vph)	42	673	0	697	315	402	56
Future Volume (vph)	42	673	0	697	315	402	56
Ideal Flow (vphpl)	1900	1900	1900	1900	1900	1900	1900
Grade (%)		-9%		5%		-9%	
Storage Length (ft)	500		350		0	0	400
Storage Lanes	1		1		1	2	1
Taper Length (ft)	25		25			25	
Lane Util. Factor	1.00	1.00	1.00	1.00	1.00	0.97	1.00
Frt					0.850		0.850
Flt Protected	0.950					0.950	
Satd. Flow (prot)	1715	1805	1715	1715	1458	3485	1607
Flt Permitted	0.950					0.950	
Satd. Flow (perm)	1715	1805	1715	1715	1458	3485	1607
Right Turn on Red					No		No
Satd. Flow (RTOR)							
Link Speed (mph)		35		35		45	
Link Distance (ft)		1579		1808		1089	
Travel Time (s)		30.8		35.2		16.5	
Peak Hour Factor	0.90	0.90	0.90	0.90	0.90	0.90	0.90
Heavy Vehicles (%)	10%	10%	8%	8%	8%	5%	5%
Adj. Flow (vph)	47	748	0	774	350	447	62
Shared Lane Traffic (%)							
Lane Group Flow (vph)	47	748	0	774	350	447	62
Enter Blocked Intersection	No	No	No	No	No	No	No
Lane Alignment	Left	Left	R NA	Left	Right	Left	Right
Median Width(ft)		12		12		24	
Link Offset(ft)		0		0		0	
Crosswalk Width(ft)		16		16		16	
Two way Left Turn Lane							
Headway Factor	0.94	0.94	1.03	1.03	1.03	0.94	0.94
Turning Speed (mph)	15		9		9	15	9
Number of Detectors	1	2	1	2	1	1	1
Detector Template	Left	Thru	Left	Thru	Right	Left	Right
Leading Detector (ft)	20	100	20	100	20	20	20
Trailing Detector (ft)	0	0	0	0	0	0	0
Detector 1 Position(ft)	0	0	0	0	0	0	0
Detector 1 Size(ft)	20	6	20	6	20	20	20
Detector 1 Type	Cl+Ex	Cl+Ex	Cl+Ex	Cl+Ex	Cl+Ex	Cl+Ex	Cl+Ex
Detector 1 Channel							
Detector 1 Extend (s)	0.0	0.0	0.0	0.0	0.0	0.0	0.0
Detector 1 Queue (s)	0.0	0.0	0.0	0.0	0.0	0.0	0.0
Detector 1 Delay (s)	0.0	0.0	0.0	0.0	0.0	0.0	0.0
Detector 2 Position(ft)		94		94			
Detector 2 Size(ft)		6		6			
Detector 2 Type		Cl+Ex		Cl+Ex			
Detector 2 Channel							
Detector 2 Extend (s)		0.0		0.0			
Turn Type	Prot	NA	Prot	NA	pm+ov	Prot	pm+ov

DocuSign Envelope ID: 5C03745C-4B01-4834-A65D-B77F558A4F46

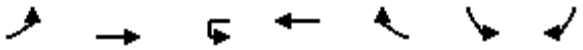

Lane Group	EBL	EBT	WBU	WBT	WBR	SBL	SBR
Protected Phases	5	2	1	6	4	4	5
Permitted Phases					6		4
Detector Phase	5	2	1	6	4	4	5
Switch Phase							
Minimum Initial (s)	7.0	10.0	7.0	10.0	7.0	7.0	7.0
Minimum Split (s)	13.7	17.3	13.3	17.3	13.8	13.8	13.7
Total Split (s)	17.0	125.0	14.0	122.0	41.0	41.0	17.0
Total Split (%)	9.4%	69.4%	7.8%	67.8%	22.8%	22.8%	9.4%
Maximum Green (s)	10.3	117.7	7.7	114.7	34.2	34.2	10.3
Yellow Time (s)	3.3	4.6	3.0	4.6	3.3	3.3	3.3
All-Red Time (s)	3.4	2.7	3.3	2.7	3.5	3.5	3.4
Lost Time Adjust (s)	-1.7	-2.3	-1.3	-2.3	-2.3	-1.8	-1.8
Total Lost Time (s)	5.0	5.0	5.0	5.0	4.5	5.0	4.9
Lead/Lag	Lead	Lag	Lead	Lag			Lead
Lead-Lag Optimize?	Yes	Yes	Yes	Yes			Yes
Vehicle Extension (s)	2.0	3.0	2.0	3.0	3.0	3.0	2.0
Recall Mode	None	C-Max	None	C-Max	None	None	None
Act Effct Green (s)	10.8	139.6		123.9	159.7	30.4	46.2
Actuated g/C Ratio	0.06	0.78		0.69	0.89	0.17	0.26
v/c Ratio	0.46	0.53		0.66	0.27	0.76	0.15
Control Delay	96.0	9.9		11.1	3.3	79.9	50.9
Queue Delay	0.0	0.0		0.0	0.0	0.0	0.0
Total Delay	96.0	9.9		11.1	3.3	79.9	50.9
LOS	F	A		B	A	E	D
Approach Delay		15.0		8.7		76.4	
Approach LOS		B		A		E	
Queue Length 50th (ft)	55	310		293	87	262	57
Queue Length 95th (ft)	103	451		560	118	317	97
Internal Link Dist (ft)		1499		1728		1009	
Turn Bay Length (ft)	500						400
Base Capacity (vph)	115	1400		1180	1339	697	425
Starvation Cap Reductn	0	0		0	0	0	0
Spillback Cap Reductn	0	0		0	0	0	0
Storage Cap Reductn	0	0		0	0	0	0
Reduced v/c Ratio	0.41	0.53		0.66	0.26	0.64	0.15

Intersection Summary			
Area Type:	Other		
Cycle Length: 180			
Actuated Cycle Length: 180			
Offset: 24 (13%), Referenced to phase 2:EBT and 6:WBT, Start of Green			
Natural Cycle: 75			
Control Type: Actuated-Coordinated			
Maximum v/c Ratio: 0.76			
Intersection Signal Delay: 24.9		Intersection LOS: C	
Intersection Capacity Utilization 56.5%		ICU Level of Service B	
Analysis Period (min) 15			

DocuSign Envelope ID: 5C03745C-4B01-4834-A65D-B77F558A4F46

Splits and Phases: 8: NC 146 (Long Shoals Rd) & Clayton Rd

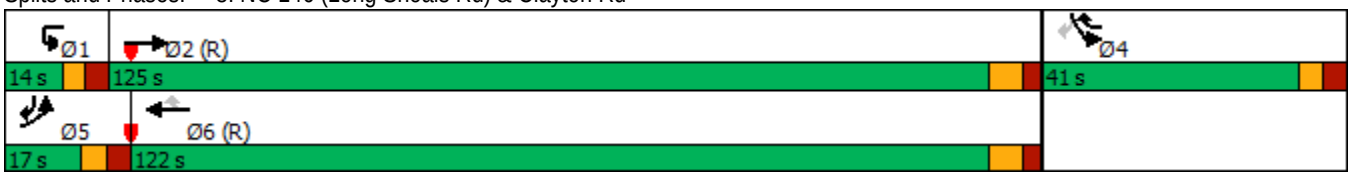

DocuSign Envelope ID: 5C03745C-4B01-4834-A65D-B77F558A4F46

Intersection	
Int Delay, s/veh	35.7

Movement	EBU	EBT	EBR	WBL	WBT	NBL	NBR
Lane Configurations							
Traffic Vol, veh/h	0	981	23	216	1029	47	481
Future Vol, veh/h	0	981	23	216	1029	47	481
Conflicting Peds, #/hr	0	0	0	0	0	0	0
Sign Control	Free	Free	Free	Free	Free	Stop	Stop
RT Channelized	-	-	None	-	None	-	Stop
Storage Length	325	-	-	325	-	200	0
Veh in Median Storage, #	-	0	-	-	0	0	-
Grade, %	-	0	-	-	0	0	-
Peak Hour Factor	90	90	90	90	90	90	90
Heavy Vehicles, %	8	8	8	8	8	3	3
Mvmt Flow	0	1090	26	240	1143	52	534

Major/Minor	Major1			Major2		Minor1	
Conflicting Flow All	1143	0	0	1116	0	2155	558
Stage 1	-	-	-	-	-	1103	-
Stage 2	-	-	-	-	-	1052	-
Critical Hdwy	6.56	-	-	4.26	-	6.86	6.96
Critical Hdwy Stg 1	-	-	-	-	-	5.86	-
Critical Hdwy Stg 2	-	-	-	-	-	5.86	-
Follow-up Hdwy	2.58	-	-	2.28	-	3.53	3.33
Pot Cap-1 Maneuver	255	-	-	588	-	~ 40	~ 471
Stage 1	-	-	-	-	-	277	-
Stage 2	-	-	-	-	-	295	-
Platoon blocked, %		-	-		-		
Mov Cap-1 Maneuver	255	-	-	588	-	~ 24	~ 471
Mov Cap-2 Maneuver	-	-	-	-	-	~ 24	-
Stage 1	-	-	-	-	-	277	-
Stage 2	-	-	-	-	-	175	-

Approach	EB	WB	NB
HCM Control Delay, s	0	2.7	181.2
HCM LOS			F

Minor Lane/Major Mvmt	NBLn1	NBLn2	EBU	EBT	EBR	WBL	WBT
Capacity (veh/h)	24	471	255	-	-	588	-
HCM Lane V/C Ratio	2.176	1.135	-	-	-	0.408	-
HCM Control Delay (s)	$ 885.3	112.4	0	-	-	15.3	-
HCM Lane LOS	F	F	A	-	-	C	-
HCM 95th %tile Q(veh)	6.5	18.7	0	-	-	2	-

Notes			
~: Volume exceeds capacity	$: Delay exceeds 300s	+: Computation Not Defined	*: All major volume in platoon

DocuSign Envelope ID: 5C03745C-4B01-4834-A65D-B77F558A4F46

Lane Group	EBL	EBT	EBR2	WBL	WBT	SEL	SER2	NWL
Lane Configurations								
Traffic Volume (vph)	230	1046	186	398	707	1194	288	250
Future Volume (vph)	230	1046	186	398	707	1194	288	250
Ideal Flow (vphpl)	1900	1900	1900	1900	1900	1900	1900	1900
Grade (%)		3%			-7%			
Storage Length (ft)	475			0		0		0
Storage Lanes	2			2		2		2
Taper Length (ft)	25			25		25		25
Lane Util. Factor	0.97	0.95	1.00	0.97	0.95	0.97	1.00	0.97
Frt			0.850				0.850	
Flt Protected	0.950			0.950		0.950		0.950
Satd. Flow (prot)	3080	3292	1420	3236	3593	3434	1525	3291
Flt Permitted	0.950			0.950		0.950		0.950
Satd. Flow (perm)	3080	3292	1420	3236	3593	3434	1525	3291
Right Turn on Red			Yes				Yes	
Satd. Flow (RTOR)			190				190	
Link Speed (mph)		45			45			
Link Distance (ft)		1000			418			
Travel Time (s)		15.2			6.3			
Peak Hour Factor	0.90	0.90	0.90	0.90	0.90	0.90	0.90	0.90
Heavy Vehicles (%)	12%	8%	12%	12%	4%	4%	8%	8%
Adj. Flow (vph)	256	1162	207	442	786	1327	320	278
Shared Lane Traffic (%)								
Lane Group Flow (vph)	256	1162	207	442	786	1327	320	278
Enter Blocked Intersection	No	No	No	No	No	No	No	No
Lane Alignment	Left	Left	Right	Left	Left	Left	Right	Left
Median Width(ft)		24			24			
Link Offset(ft)		0			0			
Crosswalk Width(ft)		16			16			
Two way Left Turn Lane								
Headway Factor	1.02	1.02	1.02	0.96	0.96	0.97	0.97	0.98
Turning Speed (mph)	15		9	15		15	9	15
Number of Detectors	1	2	1	1	2	1	1	1
Detector Template	Left	Thru	Right	Left	Thru	Left	Right	Left
Leading Detector (ft)	20	100	20	20	100	20	20	20
Trailing Detector (ft)	0	0	0	0	0	0	0	0
Detector 1 Position(ft)	0	0	0	0	0	0	0	0
Detector 1 Size(ft)	20	6	20	20	6	20	20	20
Detector 1 Type	Cl+Ex	Cl+Ex	Cl+Ex	Cl+Ex	Cl+Ex	Cl+Ex	Cl+Ex	Cl+Ex
Detector 1 Channel								
Detector 1 Extend (s)	0.0	0.0	0.0	0.0	0.0	0.0	0.0	0.0
Detector 1 Queue (s)	0.0	0.0	0.0	0.0	0.0	0.0	0.0	0.0
Detector 1 Delay (s)	0.0	0.0	0.0	0.0	0.0	0.0	0.0	0.0
Detector 2 Position(ft)		94			94			
Detector 2 Size(ft)		6			6			
Detector 2 Type		Cl+Ex			Cl+Ex			
Detector 2 Channel								
Detector 2 Extend (s)		0.0			0.0			
Turn Type	Prot	NA	Free	Prot	NA	Prot	Free	Prot

DocuSign Envelope ID: 5C03745C-4B01-4834-A65D-B77F558A4F46

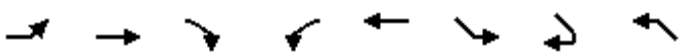

Lane Group	EBL	EBT	EBR2	WBL	WBT	SEL	SER2	NWL
Protected Phases	5	2		1	6	4		8
Permitted Phases			Free				Free	
Detector Phase	5	2		1	6	4		8
Switch Phase								
Minimum Initial (s)	7.0	12.0		7.0	12.0	7.0		7.0
Minimum Split (s)	15.3	21.0		14.5	21.0	15.0		15.0
Total Split (s)	28.0	89.0		43.0	104.0	48.0		48.0
Total Split (%)	15.6%	49.4%		23.9%	57.8%	26.7%		26.7%
Maximum Green (s)	19.7	80.0		35.5	95.0	40.0		40.0
Yellow Time (s)	3.1	5.2		3.6	5.2	3.5		3.5
All-Red Time (s)	5.2	3.8		3.9	3.8	4.5		4.5
Lost Time Adjust (s)	-3.3	-4.0		-2.5	-4.0	-3.0		-3.0
Total Lost Time (s)	5.0	5.0		5.0	5.0	5.0		5.0
Lead/Lag	Lag	Lead		Lag	Lead			
Lead-Lag Optimize?	Yes	Yes		Yes	Yes			
Vehicle Extension (s)	2.0	6.0		2.0	6.0	2.0		2.0
Minimum Gap (s)	0.2	3.0		0.2	3.0	0.2		0.2
Time Before Reduce (s)	0.0	15.0		0.0	15.0	0.0		0.0
Time To Reduce (s)	0.0	30.0		0.0	30.0	0.0		0.0
Recall Mode	None	C-Max		None	C-Max	None		None
Act Effct Green (s)	23.0	84.0	180.0	38.0	99.0	43.0	180.0	43.0
Actuated g/C Ratio	0.13	0.47	1.00	0.21	0.55	0.24	1.00	0.24
v/c Ratio	0.65	0.76	0.15	0.65	0.40	1.62	0.21	0.35
Control Delay	83.3	34.3	0.2	58.4	13.6	324.2	0.3	58.5
Queue Delay	0.0	14.2	0.0	1.9	0.8	9.6	0.0	0.0
Total Delay	83.3	48.5	0.2	60.2	14.4	333.8	0.3	58.5
LOS	F	D	A	E	B	F	A	E
Approach Delay		47.8			30.9			
Approach LOS		D			C			
Queue Length 50th (ft)	154	561	0	258	140	~1155	0	142
Queue Length 95th (ft)	208	647	0	327	151	#1292	0	190
Internal Link Dist (ft)		920			338			
Turn Bay Length (ft)	475							
Base Capacity (vph)	393	1536	1420	683	1976	820	1525	786
Starvation Cap Reductn	0	0	0	117	811	0	0	0
Spillback Cap Reductn	0	378	0	0	0	546	0	0
Storage Cap Reductn	0	0	0	0	0	0	0	0
Reduced v/c Ratio	0.65	1.00	0.15	0.78	0.67	4.84	0.21	0.35

Intersection Summary			
Area Type:	Other		
Cycle Length: 180			
Actuated Cycle Length: 180			
Offset: 0 (0%), Referenced to phase 2:EBT and 6:WBT, Start of Green, Master Intersection			
Natural Cycle: 150			
Control Type: Actuated-Coordinated			
Maximum v/c Ratio: 1.64			
Intersection Signal Delay: 120.3		Intersection LOS: F	
Intersection Capacity Utilization 86.8%		ICU Level of Service E	

DocuSign Envelope ID: 5C03745C-4B01-4834-A65D-B77F558A4F46

Analysis Period (min) 15

~ Volume exceeds capacity, queue is theoretically infinite.
Queue shown is maximum after two cycles.

95th percentile volume exceeds capacity, queue may be longer.
Queue shown is maximum after two cycles.

Splits and Phases: 10: I-26 Ramp & NC 146 (Long Shoals Rd)

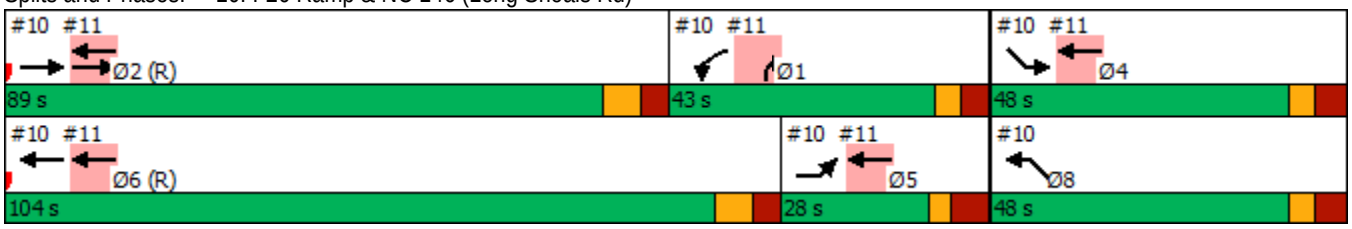

DocuSign Envelope ID: 5C03745C-4B01-4834-A65D-B77F558A4F46

2045 Build - Scenario 2 - PM

DocuSign Envelope ID: 5C03745C-4B01-4834-A65D-B77F558A4F46

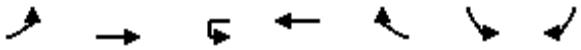

Lane Group	EBL	EBT	WBU	WBT	WBR	SBL	SBR
Lane Configurations							
Traffic Volume (vph)	94	1464	0	1180	106	106	76
Future Volume (vph)	94	1464	0	1180	106	106	76
Ideal Flow (vphpl)	1900	1900	1900	1900	1900	1900	1900
Storage Length (ft)	150		150		175	0	175
Storage Lanes	1		1		1	1	1
Taper Length (ft)	25		25			25	
Lane Util. Factor	1.00	0.95	1.00	0.95	1.00	1.00	1.00
Frt					0.850		0.850
Flt Protected	0.950					0.950	
Satd. Flow (prot)	1703	3406	1792	3406	1524	1703	1524
Flt Permitted	0.950					0.950	
Satd. Flow (perm)	1703	3406	1792	3406	1524	1703	1524
Right Turn on Red					No		No
Satd. Flow (RTOR)							
Link Speed (mph)		45		45		25	
Link Distance (ft)		1606		558		1108	
Travel Time (s)		24.3		8.5		30.2	
Peak Hour Factor	0.90	0.90	0.90	0.90	0.90	0.90	0.90
Heavy Vehicles (%)	6%	6%	6%	6%	6%	6%	6%
Adj. Flow (vph)	104	1627	0	1311	118	118	84
Shared Lane Traffic (%)							
Lane Group Flow (vph)	104	1627	0	1311	118	118	84
Enter Blocked Intersection	No	No	No	No	No	No	No
Lane Alignment	Left	Left	R NA	Left	Right	Left	Right
Median Width(ft)		12		12		12	
Link Offset(ft)		0		0		0	
Crosswalk Width(ft)		16		16		16	
Two way Left Turn Lane							
Headway Factor	1.00	1.00	1.00	1.00	1.00	1.00	1.00
Turning Speed (mph)	15		9		9	15	9
Number of Detectors	1	2	1	2	1	1	1
Detector Template	Left	Thru	Left	Thru	Right	Left	Right
Leading Detector (ft)	20	100	20	100	20	20	20
Trailing Detector (ft)	0	0	0	0	0	0	0
Detector 1 Position(ft)	0	0	0	0	0	0	0
Detector 1 Size(ft)	20	6	20	6	20	20	20
Detector 1 Type	Cl+Ex	Cl+Ex	Cl+Ex	Cl+Ex	Cl+Ex	Cl+Ex	Cl+Ex
Detector 1 Channel							
Detector 1 Extend (s)	0.0	0.0	0.0	0.0	0.0	0.0	0.0
Detector 1 Queue (s)	0.0	0.0	0.0	0.0	0.0	0.0	0.0
Detector 1 Delay (s)	0.0	0.0	0.0	0.0	0.0	0.0	0.0
Detector 2 Position(ft)		94		94			
Detector 2 Size(ft)		6		6			
Detector 2 Type		Cl+Ex		Cl+Ex			
Detector 2 Channel							
Detector 2 Extend (s)		0.0		0.0			
Turn Type	Prot	NA	Prot	NA	pm+ov	Prot	pm+ov
Protected Phases	5	2	1	6	4	4	5

DocuSign Envelope ID: 5C03745C-4B01-4834-A65D-B77F558A4F46

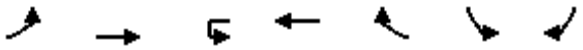

Lane Group	EBL	EBT	WBU	WBT	WBR	SBL	SBR
Permitted Phases					6		4
Detector Phase	5	2	1	6	4	4	5
Switch Phase							
Minimum Initial (s)	7.0	12.0	7.0	12.0	7.0	7.0	7.0
Minimum Split (s)	13.1	18.8	11.9	35.8	36.5	36.5	13.1
Total Split (s)	17.0	71.0	12.0	66.0	37.0	37.0	17.0
Total Split (%)	14.2%	59.2%	10.0%	55.0%	30.8%	30.8%	14.2%
Maximum Green (s)	10.9	64.2	7.1	59.2	30.5	30.5	10.9
Yellow Time (s)	3.0	4.9	3.0	4.9	3.0	3.0	3.0
All-Red Time (s)	3.1	1.9	1.9	1.9	3.5	3.5	3.1
Lost Time Adjust (s)	-1.1	-1.8	0.1	-1.8	-1.8	-1.5	-1.1
Total Lost Time (s)	5.0	5.0	5.0	5.0	4.7	5.0	5.0
Lead/Lag	Lag	Lag	Lead	Lead			Lag
Lead-Lag Optimize?	Yes	Yes	Yes	Yes			Yes
Vehicle Extension (s)	2.0	6.0	2.0	6.0	2.0	2.0	2.0
Minimum Gap (s)	0.2	3.0	0.2	3.0	0.2	0.2	0.2
Time Before Reduce (s)	0.0	15.0	0.0	15.0	0.0	0.0	0.0
Time To Reduce (s)	0.0	30.0	0.0	30.0	0.0	0.0	0.0
Recall Mode	None	C-Max	None	C-Max	None	None	None
Walk Time (s)				7.0	7.0	7.0	
Flash Dont Walk (s)				22.0	23.0	23.0	
Pedestrian Calls (#/hr)				0	0	0	
Act Effct Green (s)	12.0	95.8		78.8	98.3	14.2	31.2
Actuated g/C Ratio	0.10	0.80		0.66	0.82	0.12	0.26
v/c Ratio	0.61	0.60		0.59	0.09	0.59	0.21
Control Delay	67.9	6.2		10.4	1.3	61.2	35.0
Queue Delay	0.0	0.1		0.2	0.0	0.0	0.0
Total Delay	67.9	6.3		10.6	1.3	61.2	35.0
LOS	E	A		B	A	E	D
Approach Delay		10.0		9.9		50.3	
Approach LOS		B		A		D	
Queue Length 50th (ft)	78	207		265	8	88	51
Queue Length 95th (ft)	#146	326		307	m12	144	90
Internal Link Dist (ft)		1526		478		1028	
Turn Bay Length (ft)	150				175		175
Base Capacity (vph)	170	2718		2236	1248	454	396
Starvation Cap Reductn	0	0		271	0	0	0
Spillback Cap Reductn	0	244		0	0	0	0
Storage Cap Reductn	0	0		0	0	0	0
Reduced v/c Ratio	0.61	0.66		0.67	0.09	0.26	0.21

Intersection Summary	
Area Type:	Other
Cycle Length: 120	
Actuated Cycle Length: 120	
Offset: 111 (93%), Referenced to phase 2:EBT and 6:WBT, Start of Green	
Natural Cycle: 100	
Control Type: Actuated-Coordinated	
Maximum v/c Ratio: 0.61	

DocuSign Envelope ID: 5C03745C-4B01-4834-A65D-B77F558A4F46

Intersection Signal Delay: 12.4	Intersection LOS: B
Intersection Capacity Utilization 64.7%	ICU Level of Service C
Analysis Period (min) 15	

\# 95th percentile volume exceeds capacity, queue may be longer.
Queue shown is maximum after two cycles.
m Volume for 95th percentile queue is metered by upstream signal.

Splits and Phases: 1: NC 191 (Brevard Rd) & Commercial Access

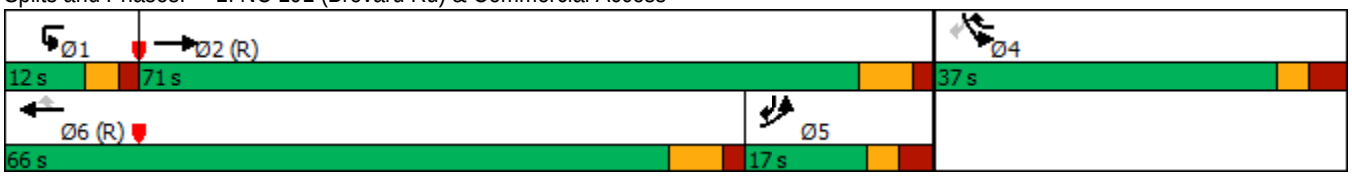

DocuSign Envelope ID: 5C03745C-4B01-4834-A65D-B77F558A4F46

Lane Group	EBT	EBR	WBL	WBT	NBL	NBR
Lane Configurations						
Traffic Volume (vph)	1329	241	321	973	313	66
Future Volume (vph)	1329	241	321	973	313	66
Ideal Flow (vphpl)	1900	1900	1900	1900	1900	1900
Grade (%)	-1%			-1%	0%	
Storage Length (ft)		225	200		0	0
Storage Lanes		1	1		2	1
Taper Length (ft)			25		25	
Lane Util. Factor	0.95	1.00	1.00	0.95	0.97	1.00
Frt		0.850				0.850
Flt Protected			0.950		0.950	
Satd. Flow (prot)	3423	1449	1620	3423	3303	1524
Flt Permitted			0.950		0.950	
Satd. Flow (perm)	3423	1449	1620	3423	3303	1524
Right Turn on Red		No				Yes
Satd. Flow (RTOR)						16
Link Speed (mph)	45			45	45	
Link Distance (ft)	558			1204	323	
Travel Time (s)	8.5			18.2	4.9	
Peak Hour Factor	0.90	0.90	0.90	0.90	0.90	0.90
Heavy Vehicles (%)	6%	12%	12%	6%	6%	6%
Adj. Flow (vph)	1477	268	357	1081	348	73
Shared Lane Traffic (%)						
Lane Group Flow (vph)	1477	268	357	1081	348	73
Enter Blocked Intersection	No	No	No	No	No	No
Lane Alignment	Left	Right	Left	Left	Left	Right
Median Width(ft)	12			12	40	
Link Offset(ft)	0			0	0	
Crosswalk Width(ft)	16			16	16	
Two way Left Turn Lane						
Headway Factor	0.99	0.99	0.99	0.99	1.00	1.00
Turning Speed (mph)		9	15		15	9
Number of Detectors	2	1	1	2	1	1
Detector Template	Thru	Right	Left	Thru	Left	Right
Leading Detector (ft)	100	20	20	100	20	20
Trailing Detector (ft)	0	0	0	0	0	0
Detector 1 Position(ft)	0	0	0	0	0	0
Detector 1 Size(ft)	6	20	20	6	20	20
Detector 1 Type	Cl+Ex	Cl+Ex	Cl+Ex	Cl+Ex	Cl+Ex	Cl+Ex
Detector 1 Channel						
Detector 1 Extend (s)	0.0	0.0	0.0	0.0	0.0	0.0
Detector 1 Queue (s)	0.0	0.0	0.0	0.0	0.0	0.0
Detector 1 Delay (s)	0.0	0.0	0.0	0.0	0.0	0.0
Detector 2 Position(ft)	94			94		
Detector 2 Size(ft)	6			6		
Detector 2 Type	Cl+Ex			Cl+Ex		
Detector 2 Channel						
Detector 2 Extend (s)	0.0			0.0		
Turn Type	NA	pm+ov	Prot	NA	Prot	pm+ov

DocuSign Envelope ID: 5C03745C-4B01-4834-A65D-B77F558A4F46



Lane Group	EBT	EBR	WBL	WBT	NBL	NBR
Protected Phases	2	4	1	6	4	1
Permitted Phases		2				4
Detector Phase	2	4	1	6	4	1
Switch Phase						
Minimum Initial (s)	12.0	7.0	10.0	12.0	7.0	10.0
Minimum Split (s)	18.0	13.9	16.3	18.6	13.9	16.3
Total Split (s)	62.0	21.0	37.0	99.0	21.0	37.0
Total Split (%)	51.7%	17.5%	30.8%	82.5%	17.5%	30.8%
Maximum Green (s)	56.0	14.1	30.7	92.4	14.1	30.7
Yellow Time (s)	4.4	3.0	3.0	4.7	3.0	3.0
All-Red Time (s)	1.6	3.9	3.3	1.9	3.9	3.3
Lost Time Adjust (s)	-1.0	-1.9	-1.3	-1.6	-1.9	-1.9
Total Lost Time (s)	5.0	5.0	5.0	5.0	5.0	4.4
Lead/Lag	Lead		Lag			Lag
Lead-Lag Optimize?	Yes		Yes			Yes
Vehicle Extension (s)	6.0	5.0	2.5	6.0	5.0	2.5
Minimum Gap (s)	3.0	0.2	0.2	3.0	0.2	0.2
Time Before Reduce (s)	15.0	0.0	0.0	15.0	0.0	0.0
Time To Reduce (s)	30.0	0.0	0.0	30.0	0.0	0.0
Recall Mode	C-Max	None	None	C-Max	None	None
Act Effct Green (s)	57.0	78.0	32.0	94.0	16.0	53.6
Actuated g/C Ratio	0.48	0.65	0.27	0.78	0.13	0.45
v/c Ratio	0.91	0.28	0.83	0.40	0.79	0.11
Control Delay	32.5	9.1	35.7	3.7	64.3	15.7
Queue Delay	2.5	0.0	0.0	0.0	0.0	0.0
Total Delay	35.0	9.1	35.7	3.7	64.3	15.7
LOS	C	A	D	A	E	B
Approach Delay	31.0			11.6	55.9	
Approach LOS	C			B	E	
Queue Length 50th (ft)	554	76	272	78	136	25
Queue Length 95th (ft)	#516	115	#425	90	#202	54
Internal Link Dist (ft)	478			1124	243	
Turn Bay Length (ft)		225	200			
Base Capacity (vph)	1625	941	432	2681	440	689
Starvation Cap Reductn	75	0	0	0	0	0
Spillback Cap Reductn	0	0	0	0	0	0
Storage Cap Reductn	0	0	0	0	0	0
Reduced v/c Ratio	0.95	0.28	0.83	0.40	0.79	0.11

Intersection Summary			
Area Type:	Other		
Cycle Length: 120			
Actuated Cycle Length: 120			
Offset: 77 (64%), Referenced to phase 2:EBT and 6:WBT, Start of Green			
Natural Cycle: 90			
Control Type: Actuated-Coordinated			
Maximum v/c Ratio: 0.91			
Intersection Signal Delay: 26.2		Intersection LOS: C	
Intersection Capacity Utilization 76.0%		ICU Level of Service D	

DocuSign Envelope ID: 5C03745C-4B01-4834-A65D-B77F558A4F46

Analysis Period (min) 15

\# 95th percentile volume exceeds capacity, queue may be longer.

Queue shown is maximum after two cycles.

Splits and Phases: 2: I-26 SEB Ramps & NC 191 (Brevard Rd)

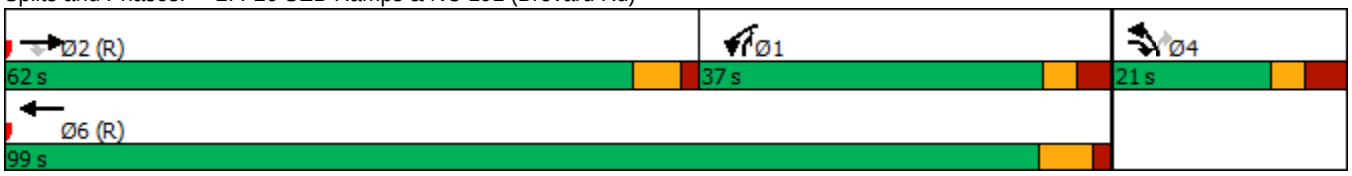

DocuSign Envelope ID: 5C03745C-4B01-4834-A65D-B77F558A4F46

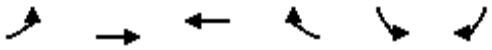

Lane Group	EBL	EBT	WBT	WBR	SBL	SBR
Lane Configurations						
Traffic Volume (vph)	336	1059	1092	55	345	202
Future Volume (vph)	336	1059	1092	55	345	202
Ideal Flow (vphpl)	1900	1900	1900	1900	1900	1900
Grade (%)		2%	-2%		2%	
Storage Length (ft)	625			200	0	400
Storage Lanes	2			1	2	1
Taper Length (ft)	25				25	
Lane Util. Factor	0.97	0.95	0.95	1.00	0.97	1.00
Frt				0.850		0.850
Flt Protected	0.950				0.950	
Satd. Flow (prot)	3095	3340	3408	1456	3240	1494
Flt Permitted	0.950				0.950	
Satd. Flow (perm)	3095	3340	3408	1456	3240	1494
Right Turn on Red				No		No
Satd. Flow (RTOR)						
Link Speed (mph)		45	45		45	
Link Distance (ft)		802	1565		860	
Travel Time (s)		12.2	23.7		13.0	
Peak Hour Factor	0.90	0.90	0.90	0.90	0.90	0.90
Heavy Vehicles (%)	12%	7%	7%	12%	7%	7%
Adj. Flow (vph)	373	1177	1213	61	383	224
Shared Lane Traffic (%)						
Lane Group Flow (vph)	373	1177	1213	61	383	224
Enter Blocked Intersection	No	No	No	No	No	No
Lane Alignment	Left	Left	Left	Right	Left	Right
Median Width(ft)		24	12		36	
Link Offset(ft)		0	0		0	
Crosswalk Width(ft)		16	16		16	
Two way Left Turn Lane						
Headway Factor	1.01	1.01	0.99	0.99	1.01	1.01
Turning Speed (mph)	15			9	15	9
Number of Detectors	1	2	2	1	1	1
Detector Template	Left	Thru	Thru	Right	Left	Right
Leading Detector (ft)	20	100	100	20	20	20
Trailing Detector (ft)	0	0	0	0	0	0
Detector 1 Position(ft)	0	0	0	0	0	0
Detector 1 Size(ft)	20	6	6	20	20	20
Detector 1 Type	Cl+Ex	Cl+Ex	Cl+Ex	Cl+Ex	Cl+Ex	Cl+Ex
Detector 1 Channel						
Detector 1 Extend (s)	0.0	0.0	0.0	0.0	0.0	0.0
Detector 1 Queue (s)	0.0	0.0	0.0	0.0	0.0	0.0
Detector 1 Delay (s)	0.0	0.0	0.0	0.0	0.0	0.0
Detector 2 Position(ft)		94	94			
Detector 2 Size(ft)		6	6			
Detector 2 Type		Cl+Ex	Cl+Ex			
Detector 2 Channel						
Detector 2 Extend (s)		0.0	0.0			
Turn Type	Prot	NA	NA	pm+ov	Prot	pm+ov

DocuSign Envelope ID: 5C03745C-4B01-4834-A65D-B77F558A4F46

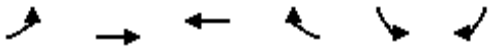

Lane Group	EBL	EBT	WBT	WBR	SBL	SBR
Protected Phases	5	2	6	4	4	5
Permitted Phases				6		4
Detector Phase	5	2	6	4	4	5
Switch Phase						
Minimum Initial (s)	7.0	12.0	12.0	7.0	7.0	7.0
Minimum Split (s)	14.0	19.0	25.0	25.0	25.0	14.0
Total Split (s)	28.0	93.0	65.0	27.0	27.0	28.0
Total Split (%)	23.3%	77.5%	54.2%	22.5%	22.5%	23.3%
Maximum Green (s)	21.0	86.0	58.0	20.0	20.0	21.0
Yellow Time (s)	5.0	5.0	5.0	5.0	5.0	5.0
All-Red Time (s)	2.0	2.0	2.0	2.0	2.0	2.0
Lost Time Adjust (s)	-2.0	-2.0	-2.0	-2.0	-2.0	-2.0
Total Lost Time (s)	5.0	5.0	5.0	5.0	5.0	5.0
Lead/Lag	Lag		Lead			Lag
Lead-Lag Optimize?	Yes		Yes			Yes
Vehicle Extension (s)	3.0	3.0	3.0	3.0	3.0	3.0
Minimum Gap (s)	0.2	3.0	3.0	0.2	0.2	0.2
Time Before Reduce (s)	0.0	15.0	15.0	0.0	0.0	0.0
Time To Reduce (s)	0.0	30.0	30.0	0.0	0.0	0.0
Recall Mode	None	C-Max	C-Max	None	None	None
Walk Time (s)			7.0	7.0	7.0	
Flash Dont Walk (s)			11.0	11.0	11.0	
Pedestrian Calls (#/hr)			0	0	0	
Act Effct Green (s)	23.0	89.8	61.8	87.0	20.2	48.2
Actuated g/C Ratio	0.19	0.75	0.52	0.72	0.17	0.40
v/c Ratio	0.63	0.47	0.69	0.06	0.70	0.37
Control Delay	18.2	1.1	24.9	4.9	54.4	27.1
Queue Delay	0.0	0.0	0.0	0.0	0.0	0.0
Total Delay	18.2	1.1	24.9	4.9	54.4	27.1
LOS	B	A	C	A	D	C
Approach Delay		5.2	23.9		44.3	
Approach LOS		A	C		D	
Queue Length 50th (ft)	122	20	366	12	144	118
Queue Length 95th (ft)	m123	m24	454	24	196	183
Internal Link Dist (ft)		722	1485		780	
Turn Bay Length (ft)	625			200		400
Base Capacity (vph)	593	2499	1755	1039	594	599
Starvation Cap Reductn	0	0	0	0	0	0
Spillback Cap Reductn	0	0	0	0	0	0
Storage Cap Reductn	0	0	0	0	0	0
Reduced v/c Ratio	0.63	0.47	0.69	0.06	0.64	0.37

Intersection Summary	
Area Type:	Other
Cycle Length: 120	
Actuated Cycle Length: 120	
Offset: 77 (64%), Referenced to phase 2:EBT and 6:WBT, Start of Green	
Natural Cycle: 75	
Control Type: Actuated-Coordinated	

DocuSign Envelope ID: 5C03745C-4B01-4834-A65D-B77F558A4F46

Maximum v/c Ratio: 0.70	
Intersection Signal Delay: 19.1	Intersection LOS: B
Intersection Capacity Utilization 62.1%	ICU Level of Service B
Analysis Period (min) 15	

m Volume for 95th percentile queue is metered by upstream signal.

Splits and Phases: 3: NC 191 (Brevard Rd) & I-26 NWB Ramps

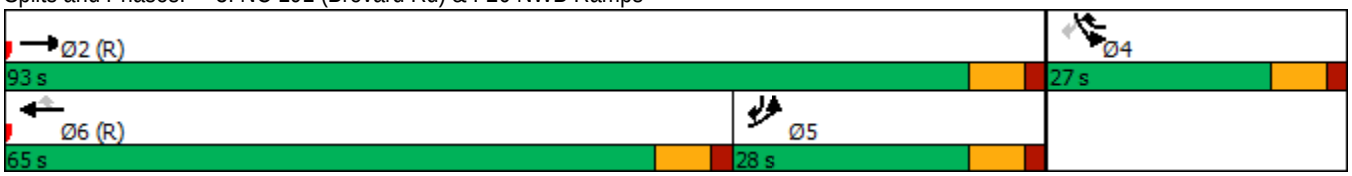

DocuSign Envelope ID: 5C03745C-4B01-4834-A65D-B77F558A4F46

Intersection	
Int Delay, s/veh	2.6

Movement	EBL	EBR	NBL	NBT	SBT	SBR
Lane Configurations						
Traffic Vol, veh/h	94	17	14	247	193	56
Future Vol, veh/h	94	17	14	247	193	56
Conflicting Peds, #/hr	0	0	0	0	0	0
Sign Control	Stop	Stop	Free	Free	Free	Free
RT Channelized	-	None	-	None	-	None
Storage Length	75	0	275	-	-	-
Veh in Median Storage, #	0	-	-	0	0	-
Grade, %	0	-	-	0	3	-
Peak Hour Factor	90	90	90	90	90	90
Heavy Vehicles, %	2	2	2	2	2	2
Mvmt Flow	104	19	16	274	214	62

Major/Minor	Minor2		Major1		Major2	
Conflicting Flow All	551	245	276	0	-	0
Stage 1	245	-	-	-	-	-
Stage 2	306	-	-	-	-	-
Critical Hdwy	6.42	6.22	4.12	-	-	-
Critical Hdwy Stg 1	5.42	-	-	-	-	-
Critical Hdwy Stg 2	5.42	-	-	-	-	-
Follow-up Hdwy	3.518	3.318	2.218	-	-	-
Pot Cap-1 Maneuver	495	794	1287	-	-	-
Stage 1	796	-	-	-	-	-
Stage 2	747	-	-	-	-	-
Platoon blocked, %				-	-	-
Mov Cap-1 Maneuver	489	794	1287	-	-	-
Mov Cap-2 Maneuver	489	-	-	-	-	-
Stage 1	786	-	-	-	-	-
Stage 2	747	-	-	-	-	-

Approach	EB	NB	SB
HCM Control Delay, s	13.7	0.4	0
HCM LOS	B		

Minor Lane/Major Mvmt	NBL	NBT	EBLn1	EBLn2	SBT	SBR
Capacity (veh/h)	1287	-	489	794	-	-
HCM Lane V/C Ratio	0.012	-	0.214	0.024	-	-
HCM Control Delay (s)	7.8	-	14.4	9.6	-	-
HCM Lane LOS	A	-	B	A	-	-
HCM 95th %tile Q(veh)	0	-	0.8	0.1	-	-

DocuSign Envelope ID: 5C03745C-4B01-4834-A65D-B77F558A4F46

Lane Group	EBL	EBT	EBR	WBL	WBT	WBR	NBL	NBT	NBR	SBL	SBT	SBR
Lane Configurations												
Traffic Volume (vph)	111	152	78	111	135	442	56	952	89	260	697	58
Future Volume (vph)	111	152	78	111	135	442	56	952	89	260	697	58
Ideal Flow (vphpl)	1900	1900	1900	1900	1900	1900	1900	1900	1900	1900	1900	1900
Grade (%)		3%			0%			2%			-7%	
Storage Length (ft)	0		0	200		0	175		150	200		0
Storage Lanes	1		0	1		1	1		1	2		0
Taper Length (ft)	25			25			25			25		
Lane Util. Factor	1.00	0.95	0.95	1.00	1.00	1.00	1.00	0.95	1.00	0.97	0.95	0.95
Frt		0.949				0.850			0.850		0.989	
Flt Protected	0.950			0.950			0.950			0.950		
Satd. Flow (prot)	1743	3308	0	1719	1810	1538	1686	3372	1508	3452	3519	0
Flt Permitted	0.950			0.950			0.950			0.950		
Satd. Flow (perm)	1743	3308	0	1719	1810	1538	1686	3372	1508	3452	3519	0
Right Turn on Red			No			No			No			No
Satd. Flow (RTOR)												
Link Speed (mph)		35			35			45			45	
Link Distance (ft)		248			1200			1589			1600	
Travel Time (s)		4.8			23.4			24.1			24.2	
Peak Hour Factor	0.90	0.90	0.90	0.90	0.90	0.90	0.90	0.90	0.90	0.90	0.90	0.90
Heavy Vehicles (%)	2%	2%	2%	5%	5%	5%	6%	6%	6%	5%	5%	5%
Adj. Flow (vph)	123	169	87	123	150	491	62	1058	99	289	774	64
Shared Lane Traffic (%)												
Lane Group Flow (vph)	123	256	0	123	150	491	62	1058	99	289	838	0
Enter Blocked Intersection	No	No	No	No	No	No	No	No	No	No	No	No
Lane Alignment	L NA	Left	Right	Left	Left	Left	Left	L NA	Right	Left	Left	Right
Median Width(ft)		12			12			24			24	
Link Offset(ft)		0			0			0			0	
Crosswalk Width(ft)		16			16			16			16	
Two way Left Turn Lane												
Headway Factor	1.02	1.02	1.02	1.00	1.00	1.00	1.01	1.01	1.01	0.96	0.96	0.96
Turning Speed (mph)	15		9	15		9	15		9	15		9
Number of Detectors	1	2		1	2	1	1	2	1	1	2	
Detector Template	Left	Thru		Left	Thru	Right	Left	Thru	Right	Left	Thru	
Leading Detector (ft)	20	100		20	100	20	20	100	20	20	100	
Trailing Detector (ft)	0	0		0	0	0	0	0	0	0	0	
Detector 1 Position(ft)	0	0		0	0	0	0	0	0	0	0	
Detector 1 Size(ft)	20	6		20	6	20	20	6	20	20	6	
Detector 1 Type	Cl+Ex	Cl+Ex		Cl+Ex	Cl+Ex	Cl+Ex	Cl+Ex	Cl+Ex	Cl+Ex	Cl+Ex	Cl+Ex	
Detector 1 Channel												
Detector 1 Extend (s)	0.0	0.0		0.0	0.0	0.0	0.0	0.0	0.0	0.0	0.0	
Detector 1 Queue (s)	0.0	0.0		0.0	0.0	0.0	0.0	0.0	0.0	0.0	0.0	
Detector 1 Delay (s)	0.0	0.0		0.0	0.0	0.0	0.0	0.0	0.0	0.0	0.0	
Detector 2 Position(ft)		94			94			94			94	
Detector 2 Size(ft)		6			6			6			6	
Detector 2 Type		Cl+Ex			Cl+Ex			Cl+Ex			Cl+Ex	
Detector 2 Channel												
Detector 2 Extend (s)		0.0			0.0			0.0			0.0	
Turn Type	Prot	NA		Prot	NA	pm+ov	Prot	NA	pm+ov	Prot	NA	

DocuSign Envelope ID: 5C03745C-4B01-4834-A65D-B77F558A4F46

Lane Group	EBL	EBT	EBR	WBL	WBT	WBR	NBL	NBT	NBR	SBL	SBT	SBR
Protected Phases	7	4		3	8	1	5	2	3	1	6	
Permitted Phases						8			2			
Detector Phase	7	4		3	8	1	5	2	3	1	6	
Switch Phase												
Minimum Initial (s)	7.0	7.0		7.0	7.0	7.0	7.0	12.0	7.0	7.0	12.0	
Minimum Split (s)	14.0	14.0		14.0	14.0	14.0	14.0	19.0	14.0	14.0	19.0	
Total Split (s)	17.0	18.0		17.0	18.0	34.0	15.0	51.0	17.0	34.0	70.0	
Total Split (%)	14.2%	15.0%		14.2%	15.0%	28.3%	12.5%	42.5%	14.2%	28.3%	58.3%	
Maximum Green (s)	10.0	11.0		10.0	11.0	27.0	8.0	44.0	10.0	27.0	63.0	
Yellow Time (s)	5.0	5.0		5.0	5.0	5.0	5.0	5.0	5.0	5.0	5.0	
All-Red Time (s)	2.0	2.0		2.0	2.0	2.0	2.0	2.0	2.0	2.0	2.0	
Lost Time Adjust (s)	-2.0	-2.0		-2.0	-2.0	-2.0	-2.0	-2.0	-2.0	-2.0	-2.0	
Total Lost Time (s)	5.0	5.0		5.0	5.0	5.0	5.0	5.0	5.0	5.0	5.0	
Lead/Lag	Lead	Lag		Lead	Lag	Lead	Lead	Lag	Lead	Lead	Lag	
Lead-Lag Optimize?	Yes	Yes		Yes	Yes	Yes	Yes	Yes	Yes	Yes	Yes	
Vehicle Extension (s)	3.0	3.0		3.0	3.0	3.0	3.0	3.0	3.0	3.0	3.0	
Minimum Gap (s)	3.0	3.0		3.0	3.0	3.0	3.0	3.0	3.0	3.0	3.0	
Time Before Reduce (s)	0.0	0.0		0.0	0.0	0.0	0.0	15.0	0.0	0.0	15.0	
Time To Reduce (s)	0.0	0.0		0.0	0.0	0.0	0.0	30.0	0.0	0.0	30.0	
Recall Mode	None	None		None	None	None	None	Min	None	None	Min	
Act Effct Green (s)	11.7	12.8		11.8	12.8	43.3	9.9	41.9	58.7	25.3	60.9	
Actuated g/C Ratio	0.10	0.11		0.11	0.11	0.39	0.09	0.37	0.52	0.23	0.54	
v/c Ratio	0.68	0.68		0.68	0.72	0.83	0.42	0.84	0.13	0.37	0.44	
Control Delay	70.0	59.3		70.9	70.7	45.2	61.1	39.6	14.8	38.6	16.8	
Queue Delay	0.0	0.0		0.0	0.0	0.0	0.0	0.0	0.0	0.0	0.0	
Total Delay	70.0	59.3		70.9	70.7	45.2	61.1	39.6	14.8	38.6	16.8	
LOS	E	E		E	E	D	E	D	B	D	B	
Approach Delay		62.8			54.3			38.7			22.4	
Approach LOS		E			D			D			C	
Queue Length 50th (ft)	94	102		94	115	336	46	383	38	95	197	
Queue Length 95th (ft)	#184	#150		#186	#219	#517	93	473	68	137	246	
Internal Link Dist (ft)		168			1120			1509			1520	
Turn Bay Length (ft)				200			175		150	200		
Base Capacity (vph)	189	388		186	213	649	152	1402	795	905	2068	
Starvation Cap Reductn	0	0		0	0	0	0	0	0	0	0	
Spillback Cap Reductn	0	0		0	0	0	0	0	0	0	0	
Storage Cap Reductn	0	0		0	0	0	0	0	0	0	0	
Reduced v/c Ratio	0.65	0.66		0.66	0.70	0.76	0.41	0.75	0.12	0.32	0.41	

Intersection Summary			
Area Type:	Other		
Cycle Length: 120			
Actuated Cycle Length: 112.1			
Natural Cycle: 80			
Control Type: Actuated-Uncoordinated			
Maximum v/c Ratio: 0.84			
Intersection Signal Delay: 39.4		Intersection LOS: D	
Intersection Capacity Utilization 72.3%		ICU Level of Service C	
Analysis Period (min) 15			

DocuSign Envelope ID: 5C03745C-4B01-4834-A65D-B77F558A4F46

95th percentile volume exceeds capacity, queue may be longer.
Queue shown is maximum after two cycles.

Splits and Phases: 5: NC 191 (Brevard Rd) & Blue Ridge Pkwy Access/NC 191 Connector

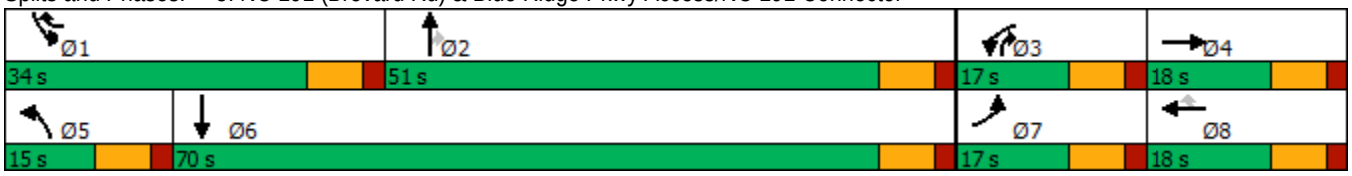

DocuSign Envelope ID: 5C03745C-4B01-4834-A65D-B77F558A4F46

Intersection	
Int Delay, s/veh	0

Movement	EBL	EBT	EBR	WBL	WBT	WBR	NBL	NBT	NBR	SBL	SBT	SBR
Lane Configurations		↑	↱		↰						↑	↱
Traffic Vol, veh/h	0	499	459	1	360	0	0	0	0	0	1	435
Future Vol, veh/h	0	499	459	1	360	0	0	0	0	0	1	435
Conflicting Peds, #/hr	0	0	0	0	0	0	0	0	0	0	0	0
Sign Control	Free	Free	Free	Free	Free	Free	Stop	Stop	Stop	Stop	Stop	Stop
RT Channelized	-	-	Yield	-	-	None	-	-	None	-	-	Yield
Storage Length	-	-	200	-	-	-	-	-	-	-	-	325
Veh in Median Storage, #	-	0	-	-	0	-	-	16974	-	-	0	-
Grade, %	-	0	-	-	0	-	-	0	-	-	0	-
Peak Hour Factor	90	90	90	90	90	90	90	90	90	90	90	90
Heavy Vehicles, %	2	5	12	12	5	2	2	2	2	2	12	5
Mvmt Flow	0	554	510	1	400	0	0	0	0	0	1	483

Major/Minor	Major1			Major2					Minor2			
Conflicting Flow All	-	0	0	554	0	0			-	956	400	
Stage 1	-	-	-	-	-	-			-	402	-	
Stage 2	-	-	-	-	-	-			-	554	-	
Critical Hdwy	-	-	-	4.22	-	-			-	6.62	6.25	
Critical Hdwy Stg 1	-	-	-	-	-	-			-	5.62	-	
Critical Hdwy Stg 2	-	-	-	-	-	-			-	5.62	-	
Follow-up Hdwy	-	-	-	2.308	-	-			-	4.108	3.345	
Pot Cap-1 Maneuver	0	-	-	968	-	0			0	248	643	
Stage 1	0	-	-	-	-	0			0	583	-	
Stage 2	0	-	-	-	-	0			0	498	-	
Platoon blocked, %		-	-		-							
Mov Cap-1 Maneuver	-	-	-	968	-	-			-	0	643	
Mov Cap-2 Maneuver	-	-	-	-	-	-			-	0	-	
Stage 1	-	-	-	-	-	-			-	0	-	
Stage 2	-	-	-	-	-	-			-	0	-	

Approach	EB	WB	SB
HCM Control Delay, s	0	0	
HCM LOS			-

Minor Lane/Major Mvmt	EBT	EBR	WBL	WBT	SBLn1	SBLn2
Capacity (veh/h)	-	-	968	-	-	643
HCM Lane V/C Ratio	-	-	0.001	-	-	0.752
HCM Control Delay (s)	-	-	8.7	0	-	25.5
HCM Lane LOS	-	-	A	A	-	D
HCM 95th %tile Q(veh)	-	-	0	-	-	6.8

DocuSign Envelope ID: 5C03745C-4B01-4834-A65D-B77F558A4F46

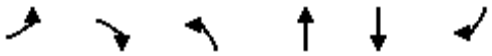

Lane Group	EBL	EBR	NBL	NBT	SBT	SBR
Lane Configurations						
Traffic Volume (vph)	499	0	360	1	0	0
Future Volume (vph)	499	0	360	1	0	0
Ideal Flow (vphpl)	1900	1900	1900	1900	1900	1900
Lane Util. Factor	1.00	1.00	1.00	1.00	1.00	1.00
Frt						
Flt Protected	0.950			0.952		
Satd. Flow (prot)	1612	0	0	1722	0	0
Flt Permitted	0.950			0.952		
Satd. Flow (perm)	1612	0	0	1722	0	0
Right Turn on Red		No				No
Satd. Flow (RTOR)						
Link Speed (mph)	35			45	45	
Link Distance (ft)	276			994	576	
Travel Time (s)	5.4			15.1	8.7	
Peak Hour Factor	0.90	0.90	0.90	0.90	0.90	0.90
Heavy Vehicles (%)	12%	2%	5%	12%	2%	2%
Adj. Flow (vph)	554	0	400	1	0	0
Shared Lane Traffic (%)						
Lane Group Flow (vph)	554	0	0	401	0	0
Enter Blocked Intersection	No	No	No	No	No	No
Lane Alignment	Left	Right	Left	Left	Left	Right
Median Width(ft)	12			0	0	
Link Offset(ft)	0			0	0	
Crosswalk Width(ft)	16			16	16	
Two way Left Turn Lane						
Headway Factor	1.00	1.00	1.00	1.00	1.00	1.00
Turning Speed (mph)	15	9	15			9
Number of Detectors	1		1	2		
Detector Template	Left		Left	Thru		
Leading Detector (ft)	20		20	100		
Trailing Detector (ft)	0		0	0		
Detector 1 Position(ft)	0		0	0		
Detector 1 Size(ft)	20		20	6		
Detector 1 Type	Cl+Ex		Cl+Ex	Cl+Ex		
Detector 1 Channel						
Detector 1 Extend (s)	0.0		0.0	0.0		
Detector 1 Queue (s)	0.0		0.0	0.0		
Detector 1 Delay (s)	0.0		0.0	0.0		
Detector 2 Position(ft)				94		
Detector 2 Size(ft)				6		
Detector 2 Type				Cl+Ex		
Detector 2 Channel						
Detector 2 Extend (s)				0.0		
Turn Type	Prot		Split	NA		
Protected Phases	2		4	4		
Permitted Phases						
Detector Phase	2		4	4		
Switch Phase						

DocuSign Envelope ID: 5C03745C-4B01-4834-A65D-B77F558A4F46

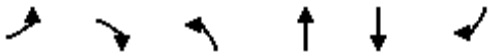

Lane Group	EBL	EBR	NBL	NBT	SBT	SBR
Minimum Initial (s)	10.0		7.0	7.0		
Minimum Split (s)	17.0		14.0	14.0		
Total Split (s)	35.0		25.0	25.0		
Total Split (%)	58.3%		41.7%	41.7%		
Maximum Green (s)	28.0		18.0	18.0		
Yellow Time (s)	5.0		5.0	5.0		
All-Red Time (s)	2.0		2.0	2.0		
Lost Time Adjust (s)	-2.0			-2.0		
Total Lost Time (s)	5.0			5.0		
Lead/Lag						
Lead-Lag Optimize?						
Vehicle Extension (s)	3.0		3.0	3.0		
Recall Mode	Min		None	None		
Act Effct Green (s)	23.7			17.5		
Actuated g/C Ratio	0.46			0.34		
v/c Ratio	0.75			0.69		
Control Delay	19.0			23.4		
Queue Delay	0.0			0.0		
Total Delay	19.0			23.4		
LOS	B			C		
Approach Delay	19.0			23.4		
Approach LOS	B			C		
Queue Length 50th (ft)	140			107		
Queue Length 95th (ft)	245			#221		
Internal Link Dist (ft)	196			914	496	
Turn Bay Length (ft)						
Base Capacity (vph)	973			693		
Starvation Cap Reductn	0			0		
Spillback Cap Reductn	0			0		
Storage Cap Reductn	0			0		
Reduced v/c Ratio	0.57			0.58		

Intersection Summary			
Area Type:	Other		
Cycle Length: 60			
Actuated Cycle Length: 51.6			
Natural Cycle: 55			
Control Type: Actuated-Uncoordinated			
Maximum v/c Ratio: 0.75			
Intersection Signal Delay: 20.9		Intersection LOS: C	
Intersection Capacity Utilization 56.0%		ICU Level of Service B	
Analysis Period (min) 15			
# 95th percentile volume exceeds capacity, queue may be longer.			
Queue shown is maximum after two cycles.			

Splits and Phases: 7: HE-0001 NWB Ramp & NC 191 Connector

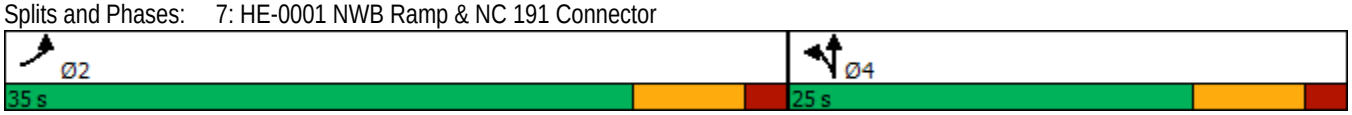

DocuSign Envelope ID: 5C03745C-4B01-4834-A65D-B77F558A4F46

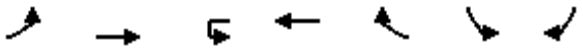

Lane Group	EBL	EBT	WBU	WBT	WBR	SBL	SBR
Lane Configurations							
Traffic Volume (vph)	62	629	0	701	412	368	62
Future Volume (vph)	62	629	0	701	412	368	62
Ideal Flow (vphpl)	1900	1900	1900	1900	1900	1900	1900
Grade (%)		-9%		5%		-9%	
Storage Length (ft)	500		350		0	0	400
Storage Lanes	1		1		1	2	1
Taper Length (ft)	25		25			25	
Lane Util. Factor	1.00	1.00	1.00	1.00	1.00	0.97	1.00
Frt					0.850		0.850
Flt Protected	0.950					0.950	
Satd. Flow (prot)	1715	1805	1715	1715	1458	3485	1607
Flt Permitted	0.950					0.950	
Satd. Flow (perm)	1715	1805	1715	1715	1458	3485	1607
Right Turn on Red					No		No
Satd. Flow (RTOR)							
Link Speed (mph)		35		35		45	
Link Distance (ft)		1579		1808		1089	
Travel Time (s)		30.8		35.2		16.5	
Peak Hour Factor	0.90	0.90	0.90	0.90	0.90	0.90	0.90
Heavy Vehicles (%)	10%	10%	8%	8%	8%	5%	5%
Adj. Flow (vph)	69	699	0	779	458	409	69
Shared Lane Traffic (%)							
Lane Group Flow (vph)	69	699	0	779	458	409	69
Enter Blocked Intersection	No	No	No	No	No	No	No
Lane Alignment	Left	Left	R NA	Left	Right	Left	Right
Median Width(ft)		12		12		24	
Link Offset(ft)		0		0		0	
Crosswalk Width(ft)		16		16		16	
Two way Left Turn Lane							
Headway Factor	0.94	0.94	1.03	1.03	1.03	0.94	0.94
Turning Speed (mph)	15		9		9	15	9
Number of Detectors	1	2	1	2	1	1	1
Detector Template	Left	Thru	Left	Thru	Right	Left	Right
Leading Detector (ft)	20	100	20	100	20	20	20
Trailing Detector (ft)	0	0	0	0	0	0	0
Detector 1 Position(ft)	0	0	0	0	0	0	0
Detector 1 Size(ft)	20	6	20	6	20	20	20
Detector 1 Type	Cl+Ex	Cl+Ex	Cl+Ex	Cl+Ex	Cl+Ex	Cl+Ex	Cl+Ex
Detector 1 Channel							
Detector 1 Extend (s)	0.0	0.0	0.0	0.0	0.0	0.0	0.0
Detector 1 Queue (s)	0.0	0.0	0.0	0.0	0.0	0.0	0.0
Detector 1 Delay (s)	0.0	0.0	0.0	0.0	0.0	0.0	0.0
Detector 2 Position(ft)		94		94			
Detector 2 Size(ft)		6		6			
Detector 2 Type		Cl+Ex		Cl+Ex			
Detector 2 Channel							
Detector 2 Extend (s)		0.0		0.0			
Turn Type	Prot	NA	Prot	NA	pm+ov	Prot	pm+ov

DocuSign Envelope ID: 5C03745C-4B01-4834-A65D-B77F558A4F46

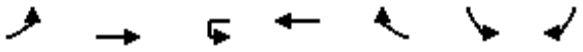

Lane Group	EBL	EBT	WBU	WBT	WBR	SBL	SBR
Protected Phases	5	2	1	6	4	4	5
Permitted Phases					6		4
Detector Phase	5	2	1	6	4	4	5
Switch Phase							
Minimum Initial (s)	7.0	10.0	7.0	10.0	7.0	7.0	7.0
Minimum Split (s)	13.7	17.3	13.3	17.3	13.8	13.8	13.7
Total Split (s)	18.0	112.0	14.0	108.0	34.0	34.0	18.0
Total Split (%)	11.3%	70.0%	8.8%	67.5%	21.3%	21.3%	11.3%
Maximum Green (s)	11.3	104.7	7.7	100.7	27.2	27.2	11.3
Yellow Time (s)	3.3	4.6	3.0	4.6	3.3	3.3	3.3
All-Red Time (s)	3.4	2.7	3.3	2.7	3.5	3.5	3.4
Lost Time Adjust (s)	-1.7	-2.3	-1.3	-2.3	-2.3	-1.8	-1.8
Total Lost Time (s)	5.0	5.0	5.0	5.0	4.5	5.0	4.9
Lead/Lag	Lead	Lead	Lag	Lag			Lead
Lead-Lag Optimize?	Yes	Yes	Yes	Yes			Yes
Vehicle Extension (s)	2.0	3.0	2.0	3.0	3.0	3.0	2.0
Recall Mode	None	C-Max	None	C-Max	None	None	None
Act Effct Green (s)	11.6	124.2		107.6	138.9	25.8	42.5
Actuated g/C Ratio	0.07	0.78		0.67	0.87	0.16	0.27
v/c Ratio	0.56	0.50		0.68	0.36	0.73	0.16
Control Delay	88.6	8.3		11.3	1.9	71.6	44.6
Queue Delay	0.0	0.0		0.0	0.0	0.0	0.0
Total Delay	88.6	8.3		11.3	1.9	71.6	44.6
LOS	F	A		B	A	E	D
Approach Delay		15.5		7.8		67.7	
Approach LOS		B		A		E	
Queue Length 50th (ft)	71	242		270	28	211	55
Queue Length 95th (ft)	128	341		336	78	267	97
Internal Link Dist (ft)		1499		1728		1009	
Turn Bay Length (ft)	500						400
Base Capacity (vph)	139	1401		1153	1294	631	441
Starvation Cap Reductn	0	0		0	0	0	0
Spillback Cap Reductn	0	0		0	0	0	0
Storage Cap Reductn	0	0		0	0	0	0
Reduced v/c Ratio	0.50	0.50		0.68	0.35	0.65	0.16

Intersection Summary			
Area Type:	Other		
Cycle Length: 160			
Actuated Cycle Length: 160			
Offset: 15 (9%), Referenced to phase 2:EBT and 6:WBT, Start of Green			
Natural Cycle: 75			
Control Type: Actuated-Coordinated			
Maximum v/c Ratio: 0.73			
Intersection Signal Delay: 21.7		Intersection LOS: C	
Intersection Capacity Utilization 65.7%		ICU Level of Service C	
Analysis Period (min) 15			

DocuSign Envelope ID: 5C03745C-4B01-4834-A65D-B77F558A4F46

Splits and Phases: 8: NC 146 (Long Shoals Rd) & Clayton Rd

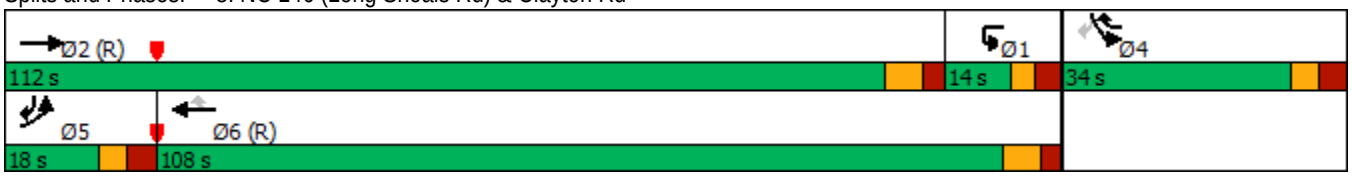

DocuSign Envelope ID: 5C03745C-4B01-4834-A65D-B77F558A4F46

Intersection	
Int Delay, s/veh	215.7

Movement	EBU	EBT	EBR	WBL	WBT	NBL	NBR
Lane Configurations							
Traffic Vol, veh/h	0	1001	46	488	943	28	280
Future Vol, veh/h	0	1001	46	488	943	28	280
Conflicting Peds, #/hr	0	0	0	0	0	0	0
Sign Control	Free	Free	Free	Free	Free	Stop	Stop
RT Channelized	-	-	None	-	None	-	Stop
Storage Length	325	-	-	325	-	200	0
Veh in Median Storage, #	-	0	-	-	0	0	-
Grade, %	-	0	-	-	0	0	-
Peak Hour Factor	90	90	90	90	90	90	90
Heavy Vehicles, %	8	8	8	8	8	3	3
Mvmt Flow	0	1112	51	542	1048	31	311

Major/Minor	Major1			Major2		Minor1	
Conflicting Flow All	1048	0	0	1163	0	2746	582
Stage 1	-	-	-	-	-	1138	-
Stage 2	-	-	-	-	-	1608	-
Critical Hdwy	6.56	-	-	4.26	-	6.86	6.96
Critical Hdwy Stg 1	-	-	-	-	-	5.86	-
Critical Hdwy Stg 2	-	-	-	-	-	5.86	-
Follow-up Hdwy	2.58	-	-	2.28	-	3.53	3.33
Pot Cap-1 Maneuver	294	-	-	563	-	~ 16	454
Stage 1	-	-	-	-	-	265	-
Stage 2	-	-	-	-	-	148	-
Platoon blocked, %		-	-		-		
Mov Cap-1 Maneuver	294	-	-	563	-	~ 1	454
Mov Cap-2 Maneuver	-	-	-	-	-	~ 1	-
Stage 1	-	-	-	-	-	265	-
Stage 2	-	-	-	-	-	~ 5	-

Approach	EB	WB	NB
HCM Control Delay, s	0	19.2	$ 1861.7
HCM LOS			F

Minor Lane/Major Mvmt	NBLn1	NBLn2	EBU	EBT	EBR	WBL	WBT
Capacity (veh/h)	1	454	294	-	-	563	-
HCM Lane V/C Ratio	31.111	0.685	-	-	-	0.963	-
HCM Control Delay (s)	$ 20193.3	28.5	0	-	-	56.4	-
HCM Lane LOS	F	D	A	-	-	F	-
HCM 95th %tile Q(veh)	5.8	5.1	0	-	-	13	-

Notes			
~: Volume exceeds capacity	$: Delay exceeds 300s	+: Computation Not Defined	*: All major volume in platoon

DocuSign Envelope ID: 5C03745C-4B01-4834-A65D-B77F558A4F46

Lane Group	EBL	EBT	EBR2	WBL	WBT	SEL	SER2	NWL
Lane Configurations								
Traffic Volume (vph)	265	788	228	629	904	934	298	229
Future Volume (vph)	265	788	228	629	904	934	298	229
Ideal Flow (vphpl)	1900	1900	1900	1900	1900	1900	1900	1900
Grade (%)		3%			-7%			
Storage Length (ft)	475			0		0		0
Storage Lanes	2			2		2		2
Taper Length (ft)	25			25		25		25
Lane Util. Factor	0.97	0.95	1.00	0.97	0.95	0.97	1.00	0.97
Frt			0.850				0.850	
Flt Protected	0.950			0.950		0.950		0.950
Satd. Flow (prot)	3080	3292	1420	3236	3593	3434	1525	3291
Flt Permitted	0.950			0.950		0.950		0.950
Satd. Flow (perm)	3080	3292	1420	3236	3593	3434	1525	3291
Right Turn on Red			Yes				Yes	
Satd. Flow (RTOR)			152				153	
Link Speed (mph)		45			45			
Link Distance (ft)		1000			418			
Travel Time (s)		15.2			6.3			
Peak Hour Factor	0.90	0.90	0.90	0.90	0.90	0.90	0.90	0.90
Heavy Vehicles (%)	12%	8%	12%	12%	4%	4%	8%	8%
Adj. Flow (vph)	294	876	253	699	1004	1038	331	254
Shared Lane Traffic (%)								
Lane Group Flow (vph)	294	876	253	699	1004	1038	331	254
Enter Blocked Intersection	No	No	No	No	No	No	No	No
Lane Alignment	Left	Left	Right	Left	Left	Left	Right	Left
Median Width(ft)		24			24			
Link Offset(ft)		0			0			
Crosswalk Width(ft)		16			16			
Two way Left Turn Lane								
Headway Factor	1.02	1.02	1.02	0.96	0.96	0.97	0.97	0.98
Turning Speed (mph)	15		9	15		15	9	15
Number of Detectors	1	2	1	1	2	1	1	1
Detector Template	Left	Thru	Right	Left	Thru	Left	Right	Left
Leading Detector (ft)	20	100	20	20	100	20	20	20
Trailing Detector (ft)	0	0	0	0	0	0	0	0
Detector 1 Position(ft)	0	0	0	0	0	0	0	0
Detector 1 Size(ft)	20	6	20	20	6	20	20	20
Detector 1 Type	Cl+Ex	Cl+Ex	Cl+Ex	Cl+Ex	Cl+Ex	Cl+Ex	Cl+Ex	Cl+Ex
Detector 1 Channel								
Detector 1 Extend (s)	0.0	0.0	0.0	0.0	0.0	0.0	0.0	0.0
Detector 1 Queue (s)	0.0	0.0	0.0	0.0	0.0	0.0	0.0	0.0
Detector 1 Delay (s)	0.0	0.0	0.0	0.0	0.0	0.0	0.0	0.0
Detector 2 Position(ft)		94			94			
Detector 2 Size(ft)		6			6			
Detector 2 Type		Cl+Ex			Cl+Ex			
Detector 2 Channel								
Detector 2 Extend (s)		0.0			0.0			
Turn Type	Prot	NA	Free	Prot	NA	Prot	Free	Prot

DocuSign Envelope ID: 5C03745C-4B01-4834-A65D-B77F558A4F46

Lane Group	EBL	EBT	EBR2	WBL	WBT	SEL	SER2	NWL
Protected Phases	5	2		1	6	4		8
Permitted Phases			Free				Free	
Detector Phase	5	2		1	6	4		8
Switch Phase								
Minimum Initial (s)	7.0	12.0		7.0	12.0	7.0		7.0
Minimum Split (s)	15.3	21.0		14.5	21.0	15.0		15.0
Total Split (s)	28.0	81.0		36.0	89.0	43.0		43.0
Total Split (%)	17.5%	50.6%		22.5%	55.6%	26.9%		26.9%
Maximum Green (s)	19.7	72.0		28.5	80.0	35.0		35.0
Yellow Time (s)	3.1	5.2		3.6	5.2	3.5		3.5
All-Red Time (s)	5.2	3.8		3.9	3.8	4.5		4.5
Lost Time Adjust (s)	-3.3	-4.0		-2.5	-4.0	-3.0		-3.0
Total Lost Time (s)	5.0	5.0		5.0	5.0	5.0		5.0
Lead/Lag	Lag	Lead		Lag	Lead			
Lead-Lag Optimize?	Yes	Yes		Yes	Yes			
Vehicle Extension (s)	2.0	6.0		2.0	6.0	2.0		2.0
Minimum Gap (s)	0.2	3.0		0.2	3.0	0.2		0.2
Time Before Reduce (s)	0.0	15.0		0.0	15.0	0.0		0.0
Time To Reduce (s)	0.0	30.0		0.0	30.0	0.0		0.0
Recall Mode	None	C-Max		None	C-Max	None		None
Act Effct Green (s)	23.0	76.0	160.0	31.0	84.0	38.0	160.0	38.0
Actuated g/C Ratio	0.14	0.48	1.00	0.19	0.52	0.24	1.00	0.24
v/c Ratio	0.67	0.56	0.18	1.12	0.53	1.27	0.22	0.33
Control Delay	73.6	23.2	0.3	124.9	15.7	180.4	0.3	51.8
Queue Delay	0.0	1.1	0.0	0.3	0.9	5.3	0.0	0.0
Total Delay	73.6	24.3	0.3	125.2	16.6	185.7	0.3	51.8
LOS	E	C	A	F	B	F	A	D
Approach Delay		30.2			61.2			
Approach LOS		C			E			
Queue Length 50th (ft)	157	337	0	~439	231	~704	0	114
Queue Length 95th (ft)	210	375	0	#571	290	#840	0	157
Internal Link Dist (ft)		920			338			
Turn Bay Length (ft)	475							
Base Capacity (vph)	442	1563	1420	626	1886	815	1525	781
Starvation Cap Reductn	0	0	0	23	564	0	0	0
Spillback Cap Reductn	0	425	0	0	0	413	0	0
Storage Cap Reductn	0	0	0	0	0	0	0	0
Reduced v/c Ratio	0.67	0.77	0.18	1.16	0.76	2.58	0.22	0.33

Intersection Summary			
Area Type:	Other		
Cycle Length: 160			
Actuated Cycle Length: 160			
Offset: 0 (0%), Referenced to phase 2:EBT and 6:WBT, Start of Green, Master Intersection			
Natural Cycle: 150			
Control Type: Actuated-Coordinated			
Maximum v/c Ratio: 1.27			
Intersection Signal Delay: 74.4		Intersection LOS: E	
Intersection Capacity Utilization 78.9%		ICU Level of Service D	

DocuSign Envelope ID: 5C03745C-4B01-4834-A65D-B77F558A4F46

Analysis Period (min) 15

~ Volume exceeds capacity, queue is theoretically infinite.
Queue shown is maximum after two cycles.

95th percentile volume exceeds capacity, queue may be longer.
Queue shown is maximum after two cycles.

Splits and Phases: 10: I-26 Ramp & NC 146 (Long Shoals Rd)

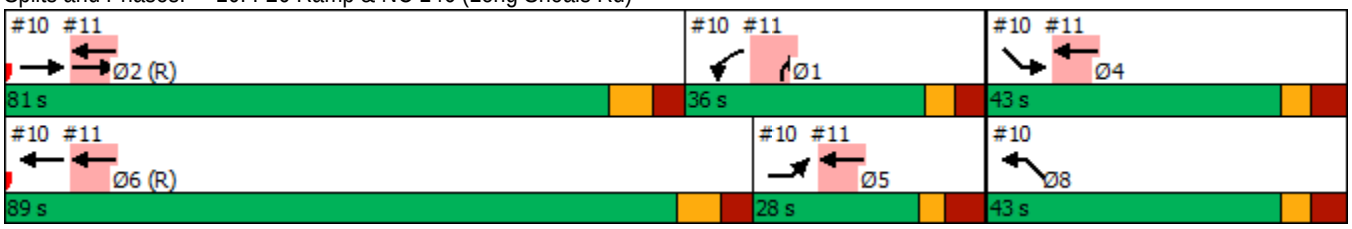

DocuSign Envelope ID: 5C03745C-4B01-4834-A65D-B77F558A4F46

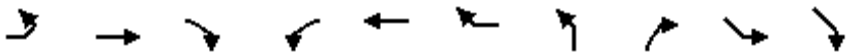

Lane Group	EBL	EBT	EBR	WBL	WBT	WBR	NBL	NBR	SEL	SER	Ø4	Ø5
Lane Configurations												
Traffic Volume (vph)	0	1722	0	0	1533	954	0	550	0	0		
Future Volume (vph)	0	1722	0	0	1533	954	0	550	0	0		
Ideal Flow (vphpl)	1900	1900	1900	1900	1900	1900	1900	1900	1900	1900		
Storage Length (ft)	0		0	0		275	0	0	0	0		
Storage Lanes	0		0	0		1	0	2	0	0		
Taper Length (ft)	25			25			25		25			
Lane Util. Factor	1.00	0.95	1.00	1.00	0.95	1.00	1.00	0.88	1.00	1.00		
Frt						0.850		0.850				
Flt Protected												
Satd. Flow (prot)	0	3471	0	0	3471	1442	0	2733	0	0		
Flt Permitted												
Satd. Flow (perm)	0	3471	0	0	3471	1442	0	2733	0	0		
Right Turn on Red			No			No		No				
Satd. Flow (RTOR)												
Link Speed (mph)		45			45		45		45			
Link Distance (ft)		418			593		396		464			
Travel Time (s)		6.3			9.0		6.0		7.0			
Peak Hour Factor	0.90	0.90	0.90	0.90	0.90	0.90	0.90	0.90	0.90	0.90		
Heavy Vehicles (%)	2%	4%	2%	2%	4%	12%	2%	4%	2%	2%		
Adj. Flow (vph)	0	1913	0	0	1703	1060	0	611	0	0		
Shared Lane Traffic (%)												
Lane Group Flow (vph)	0	1913	0	0	1703	1060	0	611	0	0		
Enter Blocked Intersection	No	No	No	No	No	No	No	No	No	No		
Lane Alignment	Left	L NA	Right	Left	Right	Right	Left	R NA	Left	Right		
Median Width(ft)		0			24		0		0			
Link Offset(ft)		0			0		0		0			
Crosswalk Width(ft)		16			16		16		16			
Two way Left Turn Lane												
Headway Factor	1.00	1.00	1.00	1.00	1.00	1.00	1.00	1.00	1.00	1.00		
Turning Speed (mph)	15		9	15		9	15	9	15	9		
Number of Detectors		2			2	1		1				
Detector Template		Thru			Thru	Right		Right				
Leading Detector (ft)		100			100	20		20				
Trailing Detector (ft)		0			0	0		0				
Detector 1 Position(ft)		0			0	0		0				
Detector 1 Size(ft)		6			6	20		20				
Detector 1 Type		Cl+Ex			Cl+Ex	Cl+Ex		Cl+Ex				
Detector 1 Channel												
Detector 1 Extend (s)		0.0			0.0	0.0		0.0				
Detector 1 Queue (s)		0.0			0.0	0.0		0.0				
Detector 1 Delay (s)		0.0			0.0	0.0		0.0				
Detector 2 Position(ft)		94			94							
Detector 2 Size(ft)		6			6							
Detector 2 Type		Cl+Ex			Cl+Ex							
Detector 2 Channel												
Detector 2 Extend (s)		0.0			0.0							
Turn Type		NA			NA	Free		Prot				
Protected Phases		2			2 4 5 6			1			4	5

DocuSign Envelope ID: 5C03745C-4B01-4834-A65D-B77F558A4F46

Lane Group	Ø6	Ø8
Lane Configurations		
Traffic Volume (vph)		
Future Volume (vph)		
Ideal Flow (vphpl)		
Storage Length (ft)		
Storage Lanes		
Taper Length (ft)		
Lane Util. Factor		
Frt		
Flt Protected		
Satd. Flow (prot)		
Flt Permitted		
Satd. Flow (perm)		
Right Turn on Red		
Satd. Flow (RTOR)		
Link Speed (mph)		
Link Distance (ft)		
Travel Time (s)		
Peak Hour Factor		
Heavy Vehicles (%)		
Adj. Flow (vph)		
Shared Lane Traffic (%)		
Lane Group Flow (vph)		
Enter Blocked Intersection		
Lane Alignment		
Median Width(ft)		
Link Offset(ft)		
Crosswalk Width(ft)		
Two way Left Turn Lane		
Headway Factor		
Turning Speed (mph)		
Number of Detectors		
Detector Template		
Leading Detector (ft)		
Trailing Detector (ft)		
Detector 1 Position(ft)		
Detector 1 Size(ft)		
Detector 1 Type		
Detector 1 Channel		
Detector 1 Extend (s)		
Detector 1 Queue (s)		
Detector 1 Delay (s)		
Detector 2 Position(ft)		
Detector 2 Size(ft)		
Detector 2 Type		
Detector 2 Channel		
Detector 2 Extend (s)		
Turn Type		
Protected Phases	6	8

DocuSign Envelope ID: 5C03745C-4B01-4834-A65D-B77F558A4F46

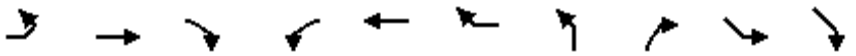

Lane Group	EBL	EBT	EBR	WBL	WBT	WBR	NBL	NBR	SEL	SER	Ø4	Ø5
Permitted Phases						Free						
Detector Phase		2			2 4 5 6			1				
Switch Phase												
Minimum Initial (s)		12.0						7.0			7.0	7.0
Minimum Split (s)		21.0						14.5			15.0	15.3
Total Split (s)		81.0						36.0			43.0	28.0
Total Split (%)		50.6%						22.5%			27%	18%
Maximum Green (s)		72.0						28.5			35.0	19.7
Yellow Time (s)		5.2						3.6			3.5	3.1
All-Red Time (s)		3.8						3.9			4.5	5.2
Lost Time Adjust (s)		0.0						0.0				
Total Lost Time (s)		9.0						7.5				
Lead/Lag		Lead						Lag				Lag
Lead-Lag Optimize?		Yes						Yes				Yes
Vehicle Extension (s)		6.0						2.0			2.0	2.0
Minimum Gap (s)		3.0						0.2			0.2	0.2
Time Before Reduce (s)		15.0						0.0			0.0	0.0
Time To Reduce (s)		30.0						0.0			0.0	0.0
Recall Mode		C-Max						None			None	None
Act Effct Green (s)		72.0			160.0	160.0		28.5				
Actuated g/C Ratio		0.45			1.00	1.00		0.18				
v/c Ratio		1.23			0.49	0.74		1.26				
Control Delay		135.6			0.0	6.3		182.9				
Queue Delay		0.1			0.1	0.0		0.6				
Total Delay		135.8			0.1	6.3		183.5				
LOS		F			A	A		F				
Approach Delay		135.8			2.5		183.5					
Approach LOS		F			A		F					
Queue Length 50th (ft)		~1316			0	750		~452				
Queue Length 95th (ft)		m#1113			m0	m0		#592				
Internal Link Dist (ft)		338			513		316		384			
Turn Bay Length (ft)						275						
Base Capacity (vph)		1561			3471	1442		486				
Starvation Cap Reductn		68			0	0		0				
Spillback Cap Reductn		12			429	0		34				
Storage Cap Reductn		0			0	0		0				
Reduced v/c Ratio		1.28			0.56	0.74		1.35				

Intersection Summary			
Area Type:	Other		
Cycle Length: 160			
Actuated Cycle Length: 160			
Offset: 0 (0%), Referenced to phase 2:EBT and 6:WBT, Start of Green, Master Intersection			
Natural Cycle: 150			
Control Type: Actuated-Coordinated			
Maximum v/c Ratio: 1.27			
Intersection Signal Delay: 71.7		Intersection LOS: E	
Intersection Capacity Utilization 80.6%		ICU Level of Service D	
Analysis Period (min) 15			

DocuSign Envelope ID: 5C03745C-4B01-4834-A65D-B77F558A4F46

Lane Group	Ø6	Ø8
Permitted Phases		
Detector Phase		
Switch Phase		
Minimum Initial (s)	12.0	7.0
Minimum Split (s)	21.0	15.0
Total Split (s)	89.0	43.0
Total Split (%)	56%	27%
Maximum Green (s)	80.0	35.0
Yellow Time (s)	5.2	3.5
All-Red Time (s)	3.8	4.5
Lost Time Adjust (s)		
Total Lost Time (s)		
Lead/Lag	Lead	
Lead-Lag Optimize?	Yes	
Vehicle Extension (s)	6.0	2.0
Minimum Gap (s)	3.0	0.2
Time Before Reduce (s)	15.0	0.0
Time To Reduce (s)	30.0	0.0
Recall Mode	C-Max	None
Act Effct Green (s)		
Actuated g/C Ratio		
v/c Ratio		
Control Delay		
Queue Delay		
Total Delay		
LOS		
Approach Delay		
Approach LOS		
Queue Length 50th (ft)		
Queue Length 95th (ft)		
Internal Link Dist (ft)		
Turn Bay Length (ft)		
Base Capacity (vph)		
Starvation Cap Reductn		
Spillback Cap Reductn		
Storage Cap Reductn		
Reduced v/c Ratio		

Intersection Summary

DocuSign Envelope ID: 5C03745C-4B01-4834-A65D-B77F558A4F46

~ Volume exceeds capacity, queue is theoretically infinite.
Queue shown is maximum after two cycles.
95th percentile volume exceeds capacity, queue may be longer.
Queue shown is maximum after two cycles.
m Volume for 95th percentile queue is metered by upstream signal.

Splits and Phases: 11: I-26 NWB Ramp & NC 146 (Long Shoals Rd)

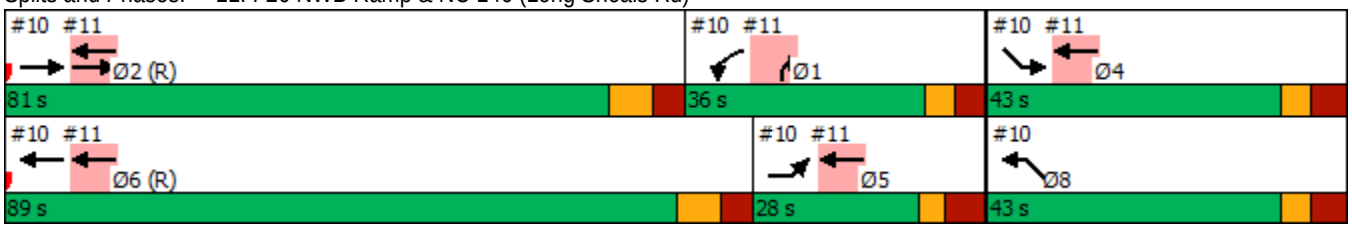

DocuSign Envelope ID: 5C03745C-4B01-4834-A65D-B77F558A4F46

Lane Group	EBL	EBT	EBR	WBL	WBT	WBR	NBL	NBT	NBR	SBL	SBT	SBR
Lane Configurations												
Traffic Volume (vph)	701	1504	67	17	1542	462	84	41	20	509	40	861
Future Volume (vph)	701	1504	67	17	1542	462	84	41	20	509	40	861
Ideal Flow (vphpl)	1900	1900	1900	1900	1900	1900	1900	1900	1900	1900	1900	1900
Grade (%)		6%			-6%			11%			7%	
Storage Length (ft)	350		400	250		225	0		0	450		0
Storage Lanes	2		1	1		1	0		0	1		1
Taper Length (ft)	25			25			25			25		
Lane Util. Factor	0.97	0.95	1.00	1.00	0.95	1.00	1.00	1.00	1.00	0.95	0.95	1.00
Frt			0.850			0.850		0.982				0.850
Flt Protected	0.950			0.950				0.972		0.950	0.959	
Satd. Flow (prot)	3266	3367	1506	1788	3575	1599	0	1632	0	1561	1576	1470
Flt Permitted	0.950			0.950				0.972		0.950	0.959	
Satd. Flow (perm)	3266	3367	1506	1788	3575	1599	0	1632	0	1561	1576	1470
Right Turn on Red			No			No			No			No
Satd. Flow (RTOR)												
Link Speed (mph)		45			45			25			25	
Link Distance (ft)		593			1582			722			992	
Travel Time (s)		9.0			24.0			19.7			27.1	
Peak Hour Factor	0.90	0.90	0.90	0.90	0.90	0.90	0.90	0.90	0.90	0.90	0.90	0.90
Heavy Vehicles (%)	4%	4%	4%	4%	4%	4%	5%	5%	5%	6%	6%	6%
Adj. Flow (vph)	779	1671	74	19	1713	513	93	46	22	566	44	957
Shared Lane Traffic (%)										46%		
Lane Group Flow (vph)	779	1671	74	19	1713	513	0	161	0	306	304	957
Enter Blocked Intersection	No	No	No	No	No	No	No	No	No	No	No	No
Lane Alignment	Left	Left	Right	Left	Left	Right	Left	Left	Right	Left	Left	Right
Median Width(ft)		24			24			0			12	
Link Offset(ft)		0			0			0			0	
Crosswalk Width(ft)		16			16			16			16	
Two way Left Turn Lane												
Headway Factor	1.04	1.04	1.04	0.96	0.96	0.96	1.08	1.08	1.08	1.05	1.05	1.05
Turning Speed (mph)	15		9	15		9	15		9	15		9
Number of Detectors	1	2	1	1	2	1	1	2		1	2	1
Detector Template	Left	Thru	Right	Left	Thru	Right	Left	Thru		Left	Thru	Right
Leading Detector (ft)	20	100	20	20	100	20	20	100		20	100	20
Trailing Detector (ft)	0	0	0	0	0	0	0	0		0	0	0
Detector 1 Position(ft)	0	0	0	0	0	0	0	0		0	0	0
Detector 1 Size(ft)	20	6	20	20	6	20	20	6		20	6	20
Detector 1 Type	Cl+Ex	Cl+Ex	Cl+Ex	Cl+Ex	Cl+Ex	Cl+Ex	Cl+Ex	Cl+Ex		Cl+Ex	Cl+Ex	Cl+Ex
Detector 1 Channel												
Detector 1 Extend (s)	0.0	0.0	0.0	0.0	0.0	0.0	0.0	0.0		0.0	0.0	0.0
Detector 1 Queue (s)	0.0	0.0	0.0	0.0	0.0	0.0	0.0	0.0		0.0	0.0	0.0
Detector 1 Delay (s)	0.0	0.0	0.0	0.0	0.0	0.0	0.0	0.0		0.0	0.0	0.0
Detector 2 Position(ft)		94			94			94			94	
Detector 2 Size(ft)		6			6			6			6	
Detector 2 Type		Cl+Ex			Cl+Ex			Cl+Ex			Cl+Ex	
Detector 2 Channel												
Detector 2 Extend (s)		0.0			0.0			0.0			0.0	
Turn Type	Prot	NA	pm+ov	Prot	NA	pm+ov	Split	NA		Split	NA	pm+ov

DocuSign Envelope ID: 5C03745C-4B01-4834-A65D-B77F558A4F46

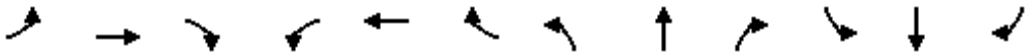

Lane Group	EBL	EBT	EBR	WBL	WBT	WBR	NBL	NBT	NBR	SBL	SBT	SBR
Protected Phases	5	2	4	1	6	3	4	4		3	3	5
Permitted Phases			2			6						3
Detector Phase	5	2	4	1	6	3	4	4		3	3	5
Switch Phase												
Minimum Initial (s)	7.0	12.0	7.0	7.0	12.0	7.0	7.0	7.0		7.0	7.0	7.0
Minimum Split (s)	13.3	20.7	39.3	13.3	32.6	13.4	39.3	39.3		13.4	13.4	13.3
Total Split (s)	49.0	99.0	18.0	14.0	64.0	29.0	18.0	18.0		29.0	29.0	49.0
Total Split (%)	30.6%	61.9%	11.3%	8.8%	40.0%	18.1%	11.3%	11.3%		18.1%	18.1%	30.6%
Maximum Green (s)	42.7	93.3	11.7	7.7	57.4	22.6	11.7	11.7		22.6	22.6	42.7
Yellow Time (s)	3.0	4.1	3.0	3.1	5.1	3.0	3.0	3.0		3.0	3.0	3.0
All-Red Time (s)	3.3	1.6	3.3	3.2	1.5	3.4	3.3	3.3		3.4	3.4	3.3
Lost Time Adjust (s)	-1.3	-0.7	-1.3	-1.3	-1.6	-1.4		-1.3		-1.4	-1.4	-1.3
Total Lost Time (s)	5.0	5.0	5.0	5.0	5.0	5.0		5.0		5.0	5.0	5.0
Lead/Lag	Lag	Lead	Lead	Lag	Lead	Lag	Lead	Lead		Lag	Lag	Lag
Lead-Lag Optimize?	Yes	Yes	Yes	Yes	Yes	Yes	Yes	Yes		Yes	Yes	Yes
Vehicle Extension (s)	3.0	6.0	3.0	2.0	6.0	3.0	3.0	3.0		3.0	3.0	3.0
Minimum Gap (s)	0.2	3.0	0.2	0.2	3.0	0.2	0.2	0.2		0.2	0.2	0.2
Time Before Reduce (s)	0.0	20.0	0.0	0.0	20.0	0.0	0.0	0.0		0.0	0.0	0.0
Time To Reduce (s)	0.0	30.0	0.0	0.0	30.0	0.0	0.0	0.0		0.0	0.0	0.0
Recall Mode	None	C-Max	None	None	C-Max	None	None	None		None	None	None
Walk Time (s)		7.0	7.0		7.0		7.0	7.0				
Flash Dont Walk (s)		8.0	26.0		19.0		26.0	26.0				
Pedestrian Calls (#/hr)		0	0		0		0	0				
Act Effct Green (s)	44.0	99.6	114.6	8.7	59.0	88.0		13.0		24.0	24.0	68.0
Actuated g/C Ratio	0.28	0.62	0.72	0.05	0.37	0.55		0.08		0.15	0.15	0.42
v/c Ratio	0.87	0.80	0.07	0.20	1.30	0.58		1.22		1.31	1.29	1.53
Control Delay	44.7	12.5	2.2	77.1	181.1	27.2		206.4		216.0	208.7	275.0
Queue Delay	0.0	3.9	0.0	0.0	0.0	0.0		0.0		0.0	0.0	0.0
Total Delay	44.7	16.4	2.2	77.1	181.1	27.2		206.4		216.0	208.7	275.0
LOS	D	B	A	E	F	C		F		F	F	F
Approach Delay		24.7			145.0			206.4			250.6	
Approach LOS		C			F			F			F	
Queue Length 50th (ft)	431	247	5	19	~1202	347		~205		~430	~424	~1243
Queue Length 95th (ft)	m310	m200	m4	50	#1337	466		#364		#641	#633	#1659
Internal Link Dist (ft)		513			1502			642			912	
Turn Bay Length (ft)	350		400	250		225				450		
Base Capacity (vph)	898	2096	1078	100	1318	879		132		234	236	624
Starvation Cap Reductn	0	340	0	0	0	0		0		0	0	0
Spillback Cap Reductn	0	0	0	0	0	0		0		0	0	0
Storage Cap Reductn	0	0	0	0	0	0		0		0	0	0
Reduced v/c Ratio	0.87	0.95	0.07	0.19	1.30	0.58		1.22		1.31	1.29	1.53

Intersection Summary	
Area Type:	Other
Cycle Length: 160	
Actuated Cycle Length: 160	
Offset: 146 (91%), Referenced to phase 2:EBT and 6:WBT, Start of Green	
Natural Cycle: 150	
Control Type: Actuated-Coordinated	

DocuSign Envelope ID: 5C03745C-4B01-4834-A65D-B77F558A4F46

Maximum v/c Ratio: 1.53	
Intersection Signal Delay: 125.3	Intersection LOS: F
Intersection Capacity Utilization 116.5%	ICU Level of Service H
Analysis Period (min) 15	

~ Volume exceeds capacity, queue is theoretically infinite.
Queue shown is maximum after two cycles.

95th percentile volume exceeds capacity, queue may be longer.
Queue shown is maximum after two cycles.

m Volume for 95th percentile queue is metered by upstream signal.

Splits and Phases: 12: Skyland Inn Dr/Schenck Pkwy & NC 146 (Long Shoals Rd)

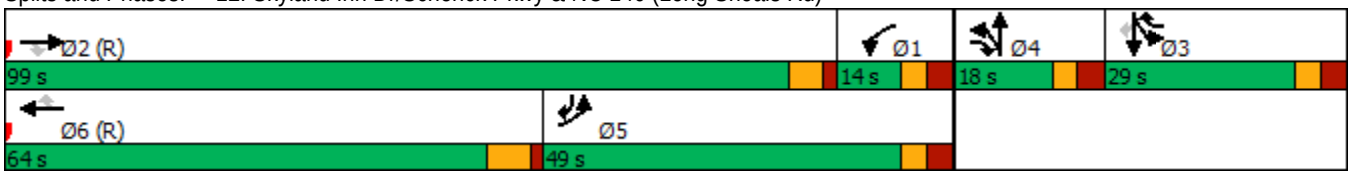

DocuSign Envelope ID: 5C03745C-4B01-4834-A65D-B77F558A4F46

Appendix R – FHWA Interactive Highway Safety Design Model

DocuSign Envelope ID: 5C03745C-4B01-4834-A65D-B77F558A4F46

To: Mark Freeman, PE, PTOE, AICP, Director of Traffic Engineering and Systems Planning, Three Oaks Engineering

From: Daniel Carter, PE, Safety Project Engineer, NCDOT

Date: 9/10/21

RE: Predictive Safety Analysis of HE-0001 Proposed Interchange Alternative Designs

---

The Safety Planning Group of the NCDOT Traffic Safety Unit undertook this analysis of the proposed interchange designs under HE-0001 for the new interchange on I-26 in south Asheville. The goal of this analysis was to produce estimates of the safety effects of alternatives for the interchange design – specifically the decision for the ramp design for the northbound direction, whether the ramps would enter and exit on the right side of the freeway or the left.

Alternatives Analyzed

Given the decision at hand regarding left vs. right side ramp design for the northbound I-26 direction, two proposed interchange designs were analyzed, as shown below.

Right Side Ramps for Northbound I-26

This design incorporates a right-hand exit and entrance for the northbound traffic. The NB ramps come together at a free flow intersection that is left-turn only. A braided road design crosses the NB ramp traffic just west of the freeway. The SB ramp traffic is brought onto the cross street via merge and diverge. No through movements are possible from ramp to ramp at any of the terminal intersections.

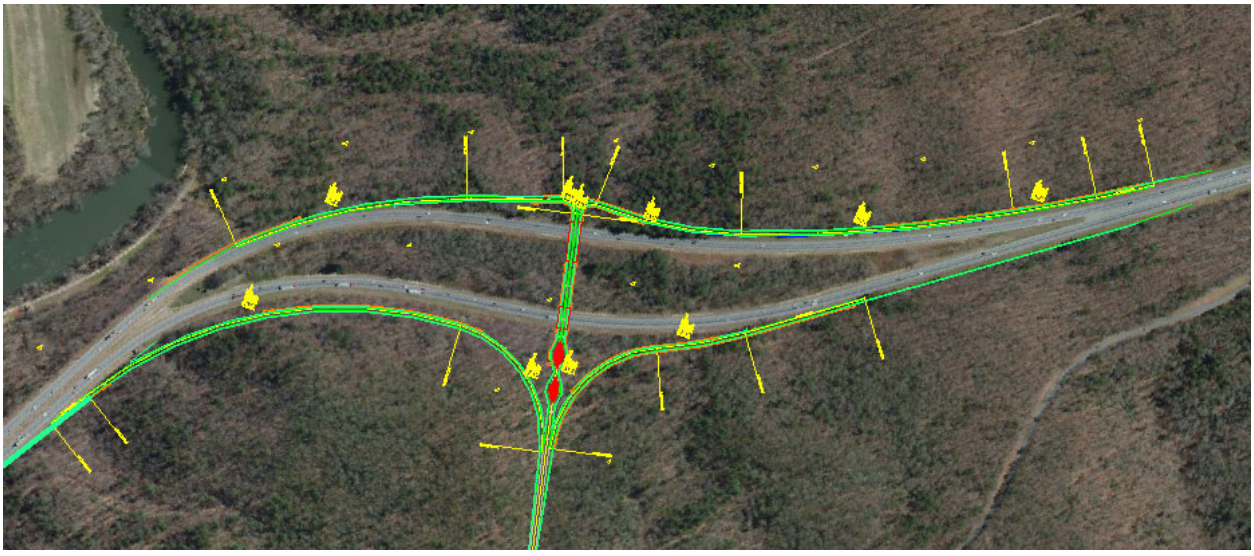

DocuSign Envelope ID: 5C03745C-4B01-4834-A65D-B77F558A4F46

Left Side Ramps for Northbound I-26

This design incorporates a left-hand exit and entrance for the northbound traffic. The NB ramps come together at a standard signalized intersection. The SB ramp traffic is brought onto the cross street at a standard signalized intersection.

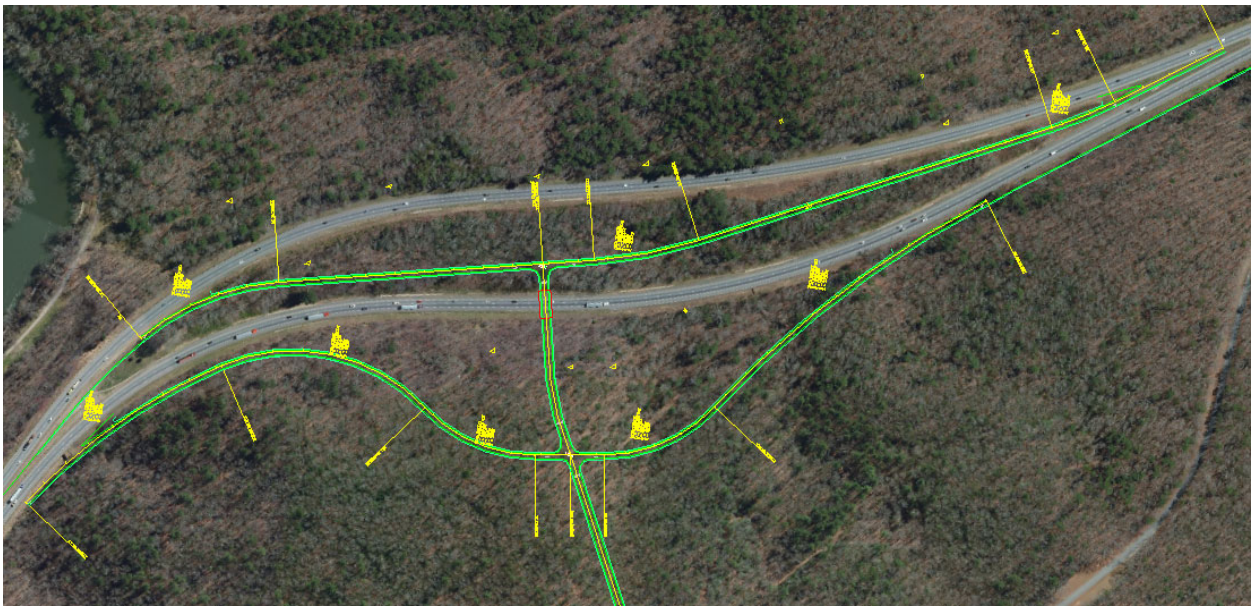

The analysis was conducted for the base year (2021) and the built out future year (2045) for each of the alternatives. The results will be presented according to these scenarios:

- 2021 Base Year, Right Side Ramps
- 2021 Base Year, Left Side Ramps
- 2045 Future Year, Right Side Ramps
- 2045 Future Year, Left Side Ramps

Analysis Process and Tools

This safety analysis was conducted using predictive safety models that produce an estimate of crashes per year given the expected site characteristics (i.e., road curvature, shoulder characteristics, lane merges, etc.) and traffic volume. Predictive safety analysis is an accepted practice and is used nationwide. The methodology used in this analysis follows the guidance of the AASHTO Highway Safety Manual (HSM), first published in 2010, and used by most state DOTs.

This analysis followed the methodology for crash prediction for freeways and ramps (chapter 18 and 19 in the HSM). The calculations were performed using the Enhanced Interchange Safety Analysis Tool spreadsheet (iSatE, build 6.10) for rural 4-lane freeways. The specific values used for each detailed site characteristic can be seen in the spreadsheets that accompany this memo.

The area of analysis for both alternatives include the four ramps, the two ramp terminal intersections, and the portion of the freeway bounded by the furthest ends of the exit ramps on both north and south sides of the interchange.

DocuSign Envelope ID: 5C03745C-4B01-4834-A65D-B77F558A4F46

Estimated Values and Assumptions Made

Given that this was a high-level analysis and many of the design details are not yet determined, many of the specific details required for the model, such as lane width, shoulder width, and barrier presence, were estimated or default values were used. The same values were used across all alternatives to create an equal basis for comparison.

Although predictive safety analysis has progressed quickly in recent years, there are still certain facility types and road or intersection geometries that are not directly addressed with an existing model. When these situations arose in this analysis, the analyst selected options that would best approximate the traffic flow or safety effect of the portion of the interchange being analyzed. All values used in the analysis can be viewed in the accompanying spreadsheets, but the major or key assumptions are listed below:

- The right side alternative presented unique configurations of the ramp terminal intersections. In the analysis, the NB ramp terminal was modeled as a signal, which was an approximation of treating the braided 2-phase signal as part of the NB ramp terminal intersection, since the actual NB ramp terminal has only the two free flow movements (not addressed by any existing predictive model). The SB ramp terminal was modeled as a 4-leg design with all-way stop control (this control selected as the type that would produce the lowest crash performance, given an expectation of fairly low crashes overall at this simple intersection).
- For both alternatives, the NB ramp intersection was modeled as a 4-leg diamond standard intersection with zero volume on one of the crossroad legs. This was done in order to be able to specify entrance and exit volumes (i.e., if the design was modeled as 3-leg, the spreadsheet assumed that either the exit or entrance leg was not present).
- NC-specific calibration factors were used for the freeway segments (but not for ramps or ramp terminals because they are not available). The factors were taken from a recent research report for rural 4-lane freeways:
    - Multivehicle F&I crashes: 1.30
    - Multivehicle PDO crashes: 1.57
    - Single vehicle F&I crashes: 0.67
    - Single vehicle PDO crashes: 1.13

Traffic Volume

Traffic volume is a significant input for the crash predictive models. The volumes used were taken from the traffic forecast report prepared by Patriot Engineering in June 2021.

2021:

- 90,000 AADT on I-26
- 9,100 AADT on new road

2045:

- 136,000 AADT on I-26
- 19,500 AADT on new road

DocuSign Envelope ID: 5C03745C-4B01-4834-A65D-B77F558A4F46

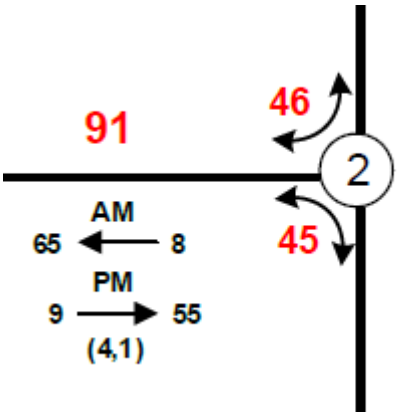

Figure 1. 2021 Traffic Forecast for the Proposed Interchange

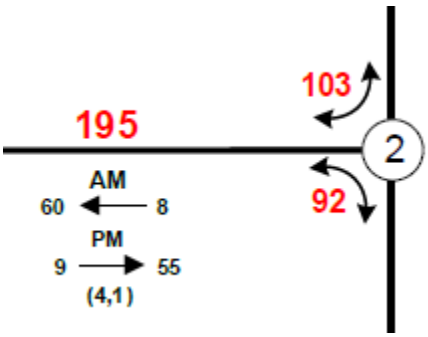

Figure 2. 2045 Traffic Forecast for the Proposed Interchange

DocuSign Envelope ID: 5C03745C-4B01-4834-A65D-B77F558A4F46

Results

The analysis produced an estimate of the total number of crashes per year that would be expected in each alternative. The results are shown in the tables below.

2021 Base Year, Right Side Ramps

Crashes by Facility Component	**Total Crashes per Year**
Freeway segments, crashes:	37.4
Ramp segments, crashes:	1.2
Crossroad ramp terminals, crashes:	2.0
Estimated number of crashes per year	40.6

2021 Base Year, Left Side Ramps

Crashes by Facility Component	**Total Crashes per Year**
Freeway segments, crashes:	39.9
Ramp segments, crashes:	1.3
Crossroad ramp terminals, crashes:	3.1
Estimated number of crashes per year	44.2

2045 Future Year, Right Side Ramps

Crashes by Facility Component	**Total Crashes per Year**
Freeway segments, crashes:	69.8
Ramp segments, crashes:	2.0
Crossroad ramp terminals, crashes:	5.2
Estimated number of crashes per year	77.0

2045 Future Year, Left Side Ramps

Crashes by Facility Component	**Total Crashes per Year**
Freeway segments, crashes:	74.5
Ramp segments, crashes:	2.2
Crossroad ramp terminals, crashes:	9.1
Estimated number of crashes per year	85.9

DocuSign Envelope ID: 5C03745C-4B01-4834-A65D-B77F558A4F46

Appendix S – Signing Plan

DocuSign Envelope ID: 5C03745C-4B01-4834-A65D-B77F558A4F46

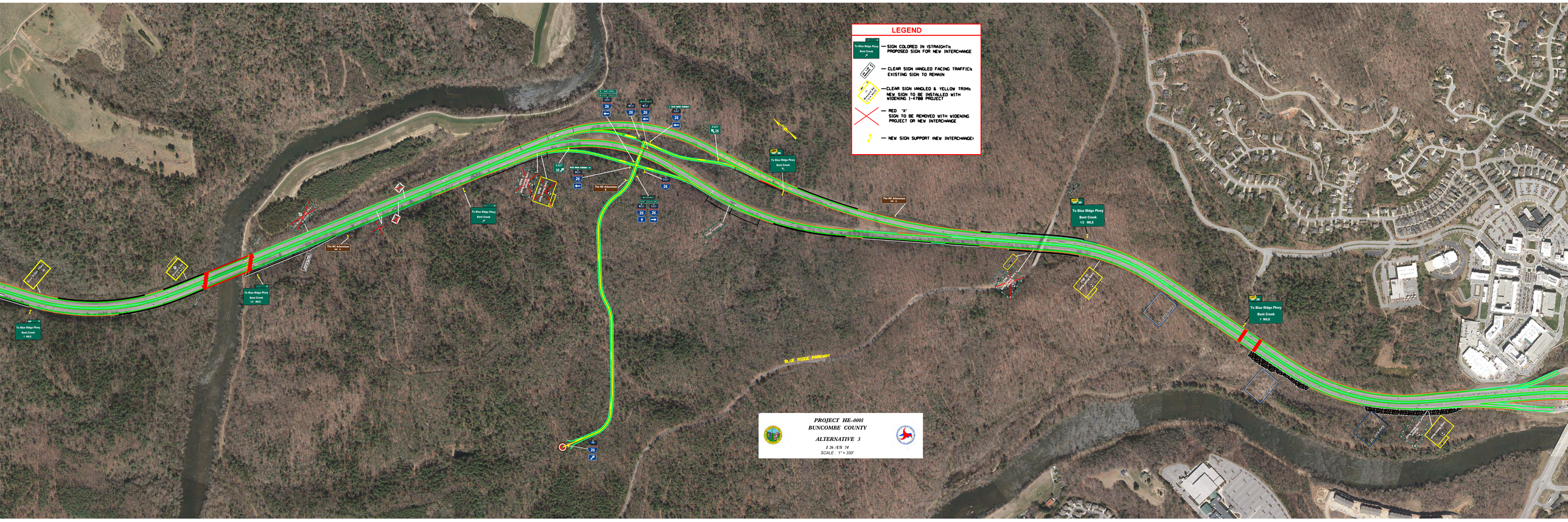

DocuSign Envelope ID: 5C03745C-4B01-4834-A65D-B77F558A4F46

Appendix T – Comparison of Diverging Diamond Interchange (DDI) to the Left Entrance-Exit with Diamond Interchange Configuration

DocuSign Envelope ID: 5C03745C-4B01-4834-A65D-B77F558A4F46

HE-0001 Supplemental Analysis

Comparison of Diverging Diamond Interchange (DDI) to the Left Entrance-Exit with Diamond Interchange Configuration

September 6, 2022

Prepared for:

North Carolina Department of Transportation

Prepared by:

Three Oaks Engineering, Inc.

324 Blackwell Street, Ste 1200

Durham, NC 27701

NCBELS License #: F-1334

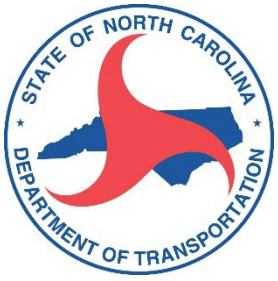

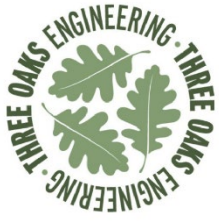

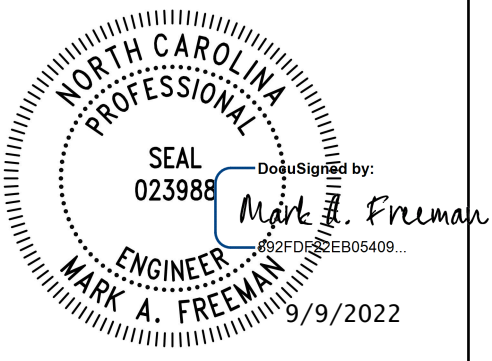

DocuSign Envelope ID: 5C03745C-4B01-4834-A65D-B77F558A4F46

Contents

1 Introduction 1
2 Scenario Description 1
2.1 Scenario 1 – Left Entrance-Exit 1
2.2 Scenario 2 – DDI (Signalized Eastbound Off Ramp) 1
2.3 Scenario 3 – DDI (Unsignalized Eastbound Off Ramp) 1
3 Analysis Results 2
3.1 Scenario 1 – Left Entrance-Exit 2
3.2 Scenario 2 – DDI (Signalized Eastbound Off Ramp) 2
3.3 Scenario 3 – DDI (Unsignalized Eastbound Off Ramp) 2

Appendices

Appendix A - Figures

Appendix B - 2045 Build Left Entrance/Exit AM SimTraffic Report

Appendix C - 2045 Build Left Entrance/Exit PM SimTraffic Report

Appendix D - 2045 Build Left Entrance/Exit AM Synchro Report

Appendix E - 2045 Build Left Entrance/Exit PM Synchro Report

Appendix F - 2045 Build Left Entrance/Exit AM HCM

Appendix G - 2045 Build Left Entrance/Exit PM HCM

Appendix H - 2045 Build DDI (Signalized EB Off-Ramp Terminal) AM SimTraffic Report

Appendix I - 2045 Build DDI (Signalized EB Off-Ramp Terminal) PM SimTraffic Report

Appendix J - 2045 Build DDI (Signalized EB Off-Ramp Terminal) AM Synchro Report

Appendix K - 2045 Build DDI (Signalized EB Off-Ramp Terminal) PM Synchro Report

Appendix L - 2045 Build DDI (Unsignalized EB Off-Ramp Terminal) AM SimTraffic Report

Appendix M - 2045 Build DDI (Unsignalized EB Off-Ramp Terminal) PM SimTraffic Report

Appendix N - 2045 Build DDI (Unsignalized EB Off-Ramp Terminal) AM Synchro Report

Appendix O - 2045 Build DDI (Unsignalized EB Off-Ramp Terminal) PM Synchro Report

DocuSign Envelope ID: 5C03745C-4B01-4834-A65D-B77F558A4F46

Comparison of Diverging Diamond Interchange (DDI) to the Left Entrance-Exit with Diamond Interchange Configuration

1 INTRODUCTION

Three Oaks Engineering (Three Oaks) prepared an Interchange Access Report (IAR) in support of HE-0001 Addition of a new interchange on I-26 between the existing interchanges of NC 191 (Brevard Road) and NC 146 (Long Shoals Road) in Asheville, North Carolina. The IAR analyzed two interchange concepts. The first was a standard diamond interchange with all ramps diverging or merging from the right side of the interstate. The second option, developed to reduce the impact on the historic Biltmore property, was to have the westbound on and off ramps connect on the left (west) side of the interstate. With the proposed interchange located in the bifurcated section of I-26, there is the potential of constructing the ramps on the left side, in between the westbound and eastbound interstate segments.

After the completion of the draft IAR, the team requested that Three Oaks perform a cursory analysis on the left entrance-exit concept, but with a diverging diamond interchange (DDI) configuration in lieu of the standard diamond. This document provides a summary of that comparison. Note that the details of volume development and overall project analysis are provided in the IAR. As such, those will not be repeated in this supplemental document.

2 SCENARIO DESCRIPTION

The following section provides a brief description of each of the alternatives.

2.1 Scenario 1 – Left Entrance-Exit

Two Build interchange scenarios were evaluated as part of the HE-0001 IAR dated October 18, 2021. While both interchanges evaluated were diamond interchanges, one was a traditional diamond with ramps entering and exiting to and from the right-hand (outside) lanes, and the other was a diamond with the westbound ramps merging and diverging from the inside lanes (left entrance/exit). Since the gore points and ramp tie-in points did not change between the two options, the interchange ramp terminal intersections are expected to operate the same for the two scenarios. For the purposes of this comparison, the left entrance/exit scenario was used. See **Figure 1** (all figures are located in Appendix A) for details.

2.2 Scenario 2 – DDI (Signalized Eastbound Off Ramp)

The interchange design assumed for this analysis is a half-DDI with signal control at the eastern intersection of I-26 and the proposed NC 191 Connector interchange. See **Figure 2** for details.

DocuSign Envelope ID: 5C03745C-4B01-4834-A65D-B77F558A4F46

2.3 Scenario 3 – DDI (Unsignalized Eastbound Off Ramp)

This scenario is identical to Scenario 2 except at the western ramp terminal where the eastbound off ramp movement to westbound Connector is free-flowing. See **Figure 3** for details.

3 ANALYSIS RESULTS

The results of the Synchro analysis are described below and summarized in Table 1.

3.1 Scenario 1 – Left Entrance-Exit

At the HE-0001 eastbound ramp intersection with NC 191 Connector, the southeast-bound right-turn operates at LOS F in the AM Peak. This result is based on the HCM 6th edition result for a stop-controlled movement. However, this movement runs under yield control. To provide a more accurate result of the operations of this movement, ten SimTraffic runs were completed and compiled.

Based on these runs, the maximum queue for the southeast-bound ramp is 265 feet and 189 feet in the AM and PM peaks respectively. The projected queue is contained within the 325 feet storage lane provided. Based on the average of the ten runs, the delay for this approach is 8.6 seconds per vehicle (sec/veh) in the AM peak and 5.7 sec/veh in the PM peak. Both delay values are level of service (LOS) A. All other movements operate at LOS D or better in both peak periods.

3.2 Scenario 2 – DDI (Signalized Eastbound Off Ramp)

Overall, the intersections operate at LOS A or LOS B in both peak periods. While the design operates acceptably with regard to level of service, additional analysis is recommended regarding the 175’ westbound auxiliary lane to determine the need for the lane and the best length should the lane be included.

3.3 Scenario 3 – DDI (Unsignalized Eastbound Off Ramp)

During the SimTraffic simulation, there are several times when the traffic from the eastbound off ramp that desires to merge with the westbound connector road comes to a complete stop because of inadequate room to complete their merge maneuver. If this option is pursued, we recommend extending the merge lane. Also, based on the average of 10 SimTraffic runs, this scenario has the highest travel time and total delay in the AM peak and lowest travel time and total delay in the PM peak compared to the other scenarios.

DocuSign Envelope ID: 5C03745C-4B01-4834-A65D-B77F558A4F46

Table 1 – Analysis Summary

2045 Build Scenario	Left Entrance Exit					Diverging Diamond Interchange						Diverging Diamond Interchange - Unsignalized SB Off-Ramp					
Node #	Intersection	Approach	Lane Group	Level of Service (Delay) (sec/veh)		Node #	Intersection	Approach	Lane Group	Level of Service (Delay) (sec/veh)		Node #	Intersection	Approach	Lane Group	Level of Service (Delay) (sec/veh)	
				AM	PM					AM	PM					AM	PM
6*	HE-0001 SEB Ramp and NC 191 Connector (Unsignalized)	Overall				6	HE-0001 SB Off-Ramp and NC 191 Connector	Overall		B (10.8)	A (6.2)	6	HE-0001 SB Off-Ramp and NC 191 Connector	Overall		-	-
		EB	T	-	-			EB	T	-	-			EB	T	-	-
			R	-	-			WB	T	B (11.0)	A (6.8)			WB	T	-	-
		WB	TL	A (8.2)	A (8.7)			SB	R	C (24.0)	B (18.7)			SB	R	-	-
		SB	T	-	-												
			R	F (51.6)** A (8.6)***	D (25.5)** A (5.7)***												
7	HE-0001 NWB Ramp and NC 191 Connector (Signalized)	Overall		B (17.8)	C (20.9)	7	NC 191 Connector WB and NC 191 Connector EB	Overall		B (19.7)	B (18.9)	7	NC 191 Connector WB and NC 191 Connector EB	Overall		B (15.9)	B (18.2)
		EB	L	B (18.1)	B (19.0)			EB	T	B (12.7)	B (17.5)			EB	T	B (16.4)	B (17.4)
		NB	TL	B (17.5)	C (23.4)			WB	T	C (25.3)	C (20.9)			WB	T	B (15.6)	B (19.3)
Node #	Intersection	Approach	Lane Group	95th Percentile Queue (feet)**** (Synchro)		Node #	Intersection	Approach	Lane Group	95th Percentile Queue (feet) (Synchro)		Node #	Intersection	Approach	Lane Group	95th Percentile Queue (feet) (Synchro)	
				AM	PM					AM	PM					AM	PM
6*	HE-0001 SEB Ramp and NC 191 Connector (Unsignalized)	EB	T	-	-	6	HE-0001 SB Off-Ramp and NC 191 Connector	EB	T	0	0	6	HE-0001 SB Off-Ramp and NC 191 Connector	EB	T	-	-
			R	-	-			WB	T	m#70	35			WB	T	-	-
		WB	TL	0	0			SB	R	#285	222			SB	R	-	-
		SB	T	-	-												
			R	325	175												
7	HE-0001 NWB Ramp and NC 191 Connector (Signalized)	EB	L	174	245	7	NC 191 Connector WB and NC 191 Connector EB	EB	T	138	242	7	NC 191 Connector WB and NC 191 Connector EB	EB	T	170	242
		NB	TL	211	#221			WB	T	#281	201			WB	T	196	194

DocuSign Envelope ID: 5C03745C-4B01-4834-A65D-B77F558A4F46

Node #	Intersection	Approach	Lane Group	Max Queue (feet) (SimTraffic)		Node #	Intersection	Approach	Lane Group	Max Queue (feet) (SimTraffic)		Node #	Intersection	Approach	Lane Group	Max Queue (feet) (SimTraffic)	
				AM	PM					AM	PM					AM	PM
6*	HE-0001 SEB Ramp and NC 191 Connector (Unsignalized)	EB	T	-	49	6	HE-0001 SB Off-Ramp and NC 191 Connector	EB	T	88	220	6	HE-0001 SB Off-Ramp and NC 191 Connector	EB	T	93	153
			R	10	44			WB	T	126	111			WB	T	14	7
		WB	TL	5	12			SB	R	238	233			SB	R	4	9
		SB	T	12	18												
			R	265	189												
7	HE-0001 NWB Ramp and NC 191 Connector (Signalized)	EB	L	209	240	7	NC 191 Connector WB and NC 191 Connector EB	EB	T	80	80	7	NC 191 Connector WB and NC 191 Connector EB	EB	T	79	81
		NB	TL	225	240			WB	T	310	299			WB	T	239	264

Note: volume to capacity ratios (v/c) for all movements are less than 1.0

*LOS, Delay, and 95% Queue for unsignalized intersections are reported from HCM 6th edition results

**The HCM 6th edition result is based on stop-control while this movement actually runs under yield control

***SimTraffic delay based on the average of 10 runs (sec/veh)

****95% Queue for unsignalized intersections is calculated as 95% Q (veh) (rounded up to nearest integer) * 25 ft

m - queuing is metered by upstream intersection

- indicates that the volume for the 95th percentile cycle exceeds capacity

DocuSign Envelope ID: 5C03745C-4B01-4834-A65D-B77F558A4F46

APPENDICES

DocuSign Envelope ID: 5C03745C-4B01-4834-A65D-B77F558A4F46

APPENDIX A

Figures

DocuSign Envelope ID: 5C03745C-4B01-4834-A65D-B77F558A4F46

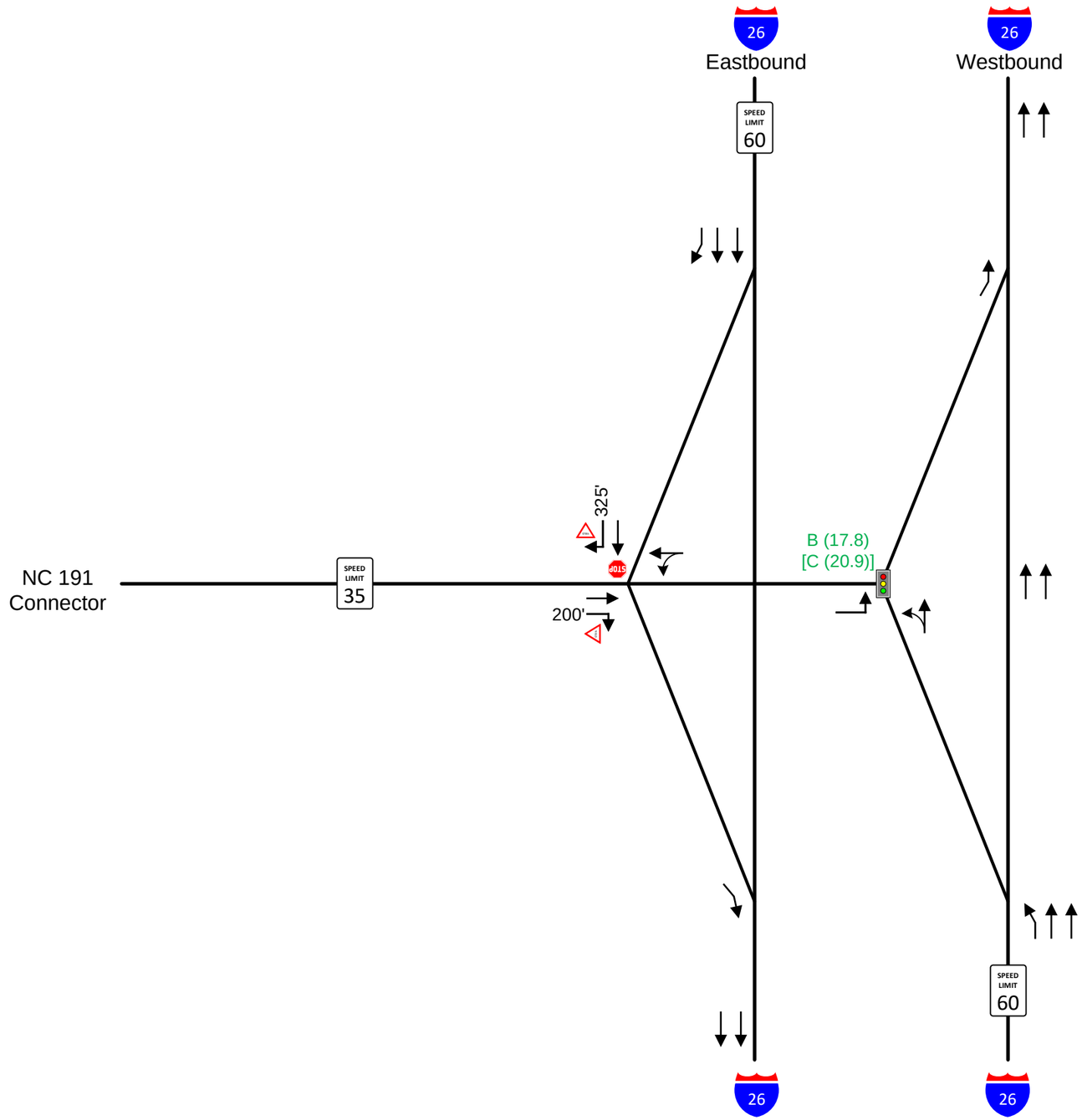

N

Figure 1 - Left Entrance Exit

SHEET 1 OF 1

LEGEND

- Existing Roadway
- Existing Lanes
- XX' Storage Distance
- Speed Limit 45
- Existing Signal
- Stop Sign
- Yield Sign
- X (X) [X (X)] AM LOS (Delay) [PM LOS (Delay)]
- LOS A-D LOS E LOS F

TIP: HE-0001	**WBS:** 49473
COUNTY: Buncombe	**DIVISION:** 13
DATE: September 2022	
PREPARED BY: Three Oaks Engineering	
LOCATION: I-26/NC 191 Connector	
PROJECT: I-26 Future Interchange at NC 191 Connector (Exit 35)	

DocuSign Envelope ID: 5C03745C-4B01-4834-A65D-B77F558A4F46

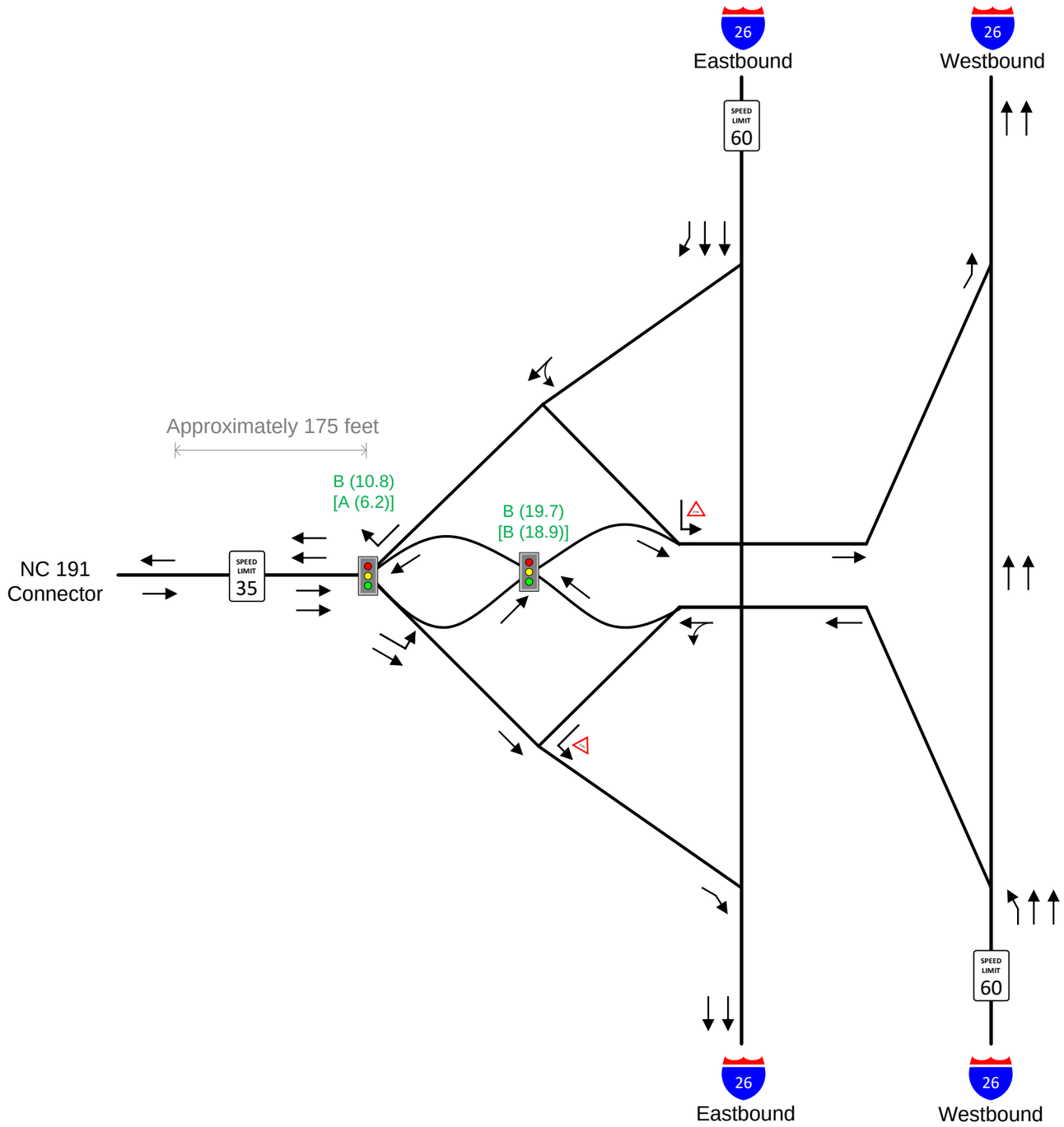

Figure 2 - Diverging Diamond Interchange - Alternative 1 SHEET 1 OF 1

LEGEND

- Existing Roadway
- Existing Lanes
- XX' Storage Distance
- Speed Limit 45
- Existing Signal
- Stop Sign
- Yield Sign
- X (X) [X (X)] AM LOS (Delay) [PM LOS (Delay)]
- LOS A-D LOS E LOS F

TIP: HE-0001	**WBS:** 49473
COUNTY: Buncombe	**DIVISION:** 13
DATE: September 2022	
PREPARED BY: Three Oaks Engineering	
LOCATION: I-26/NC 191 Connector	
PROJECT: I-26 Future Interchange at NC 191 Connector (Exit 35)	

DocuSign Envelope ID: 5C03745C-4B01-4834-A65D-B77F558A4F46

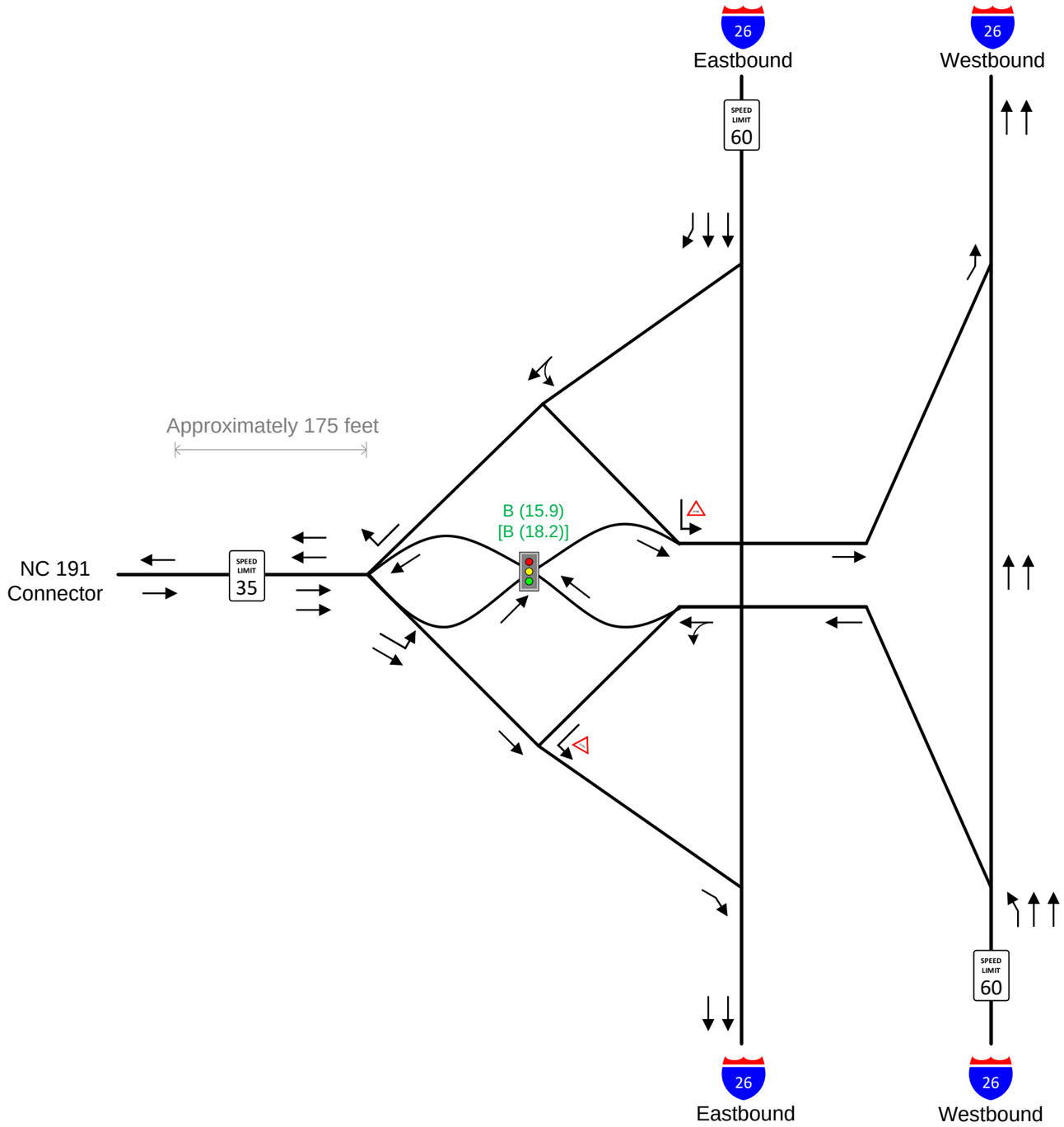

N

Figure 3 - Diverging Diamond Interchange - Alternative 2 **SHEET 1 OF 1**

LEGEND

- Existing Roadway
- Existing Lanes
- XX' Storage Distance
- Speed Limit 45
- Existing Signal
- Stop Sign
- Yield Sign
- X (X) [X (X)] AM LOS (Delay) [PM LOS (Delay)]

LOS A-D LOS E LOS F

TIP: HE-0001	**WBS:** 49473
COUNTY: Buncombe	**DIVISION:** 13
DATE: September 2022	
PREPARED BY: Three Oaks Engineering	
LOCATION: I-26/NC 191 Connector	
PROJECT: I-26 Future Interchange at NC 191 Connector (Exit 35)	

DocuSign Envelope ID: 5C03745C-4B01-4834-A65D-B77F558A4F46

APPENDIX B

2045 Build Left Entrance/Exit AM SimTraffic Report

DocuSign Envelope ID: 5C03745C-4B01-4834-A65D-B77F558A4F46

SimTraffic Simulation Summary
2045 Build Scenario 2 AM

06/09/2022

Summary of All Intervals

Run Number	1	10	2	3	4	5	6
Start Time	6:50	6:50	6:50	6:50	6:50	6:50	6:50
End Time	8:00	8:00	8:00	8:00	8:00	8:00	8:00
Total Time (min)	70	70	70	70	70	70	70
Time Recorded (min)	60	60	60	60	60	60	60
# of Intervals	2	2	2	2	2	2	2
# of Recorded Intervals	1	1	1	1	1	1	1
Vehs Entered	12248	12282	12069	12178	12252	11966	12329
Vehs Exited	12137	12197	11896	12029	12190	11865	12145
Starting Vehs	695	742	670	675	689	698	638
Ending Vehs	806	827	843	824	751	799	822
Travel Distance (mi)	10305	10398	10167	10325	10278	10098	10387
Travel Time (hr)	1682.8	1576.0	1748.6	1634.4	1655.0	1776.0	1630.3
Total Delay (hr)	1395.7	1286.1	1465.3	1346.9	1368.2	1494.0	1341.4
Total Stops	16098	15876	15885	16403	16391	15556	16587
Fuel Used (gal)	671.4	648.7	683.4	659.5	665.6	685.9	661.3

Summary of All Intervals

Run Number	7	8	9	Avg
Start Time	6:50	6:50	6:50	6:50
End Time	8:00	8:00	8:00	8:00
Total Time (min)	70	70	70	70
Time Recorded (min)	60	60	60	60
# of Intervals	2	2	2	2
# of Recorded Intervals	1	1	1	1
Vehs Entered	12096	12124	12078	12166
Vehs Exited	12028	12054	11991	12053
Starting Vehs	705	714	703	694
Ending Vehs	773	784	790	797
Travel Distance (mi)	10252	10309	10214	10273
Travel Time (hr)	1834.1	1746.1	1799.1	1708.3
Total Delay (hr)	1548.4	1458.8	1514.7	1422.0
Total Stops	15790	16541	16358	16142
Fuel Used (gal)	704.1	683.9	695.5	675.9

Interval #0 Information Seeding

Start Time	6:50
End Time	7:00
Total Time (min)	10

Volumes adjusted by Growth Factors.

No data recorded this interval.

DocuSign Envelope ID: 5C03745C-4B01-4834-A65D-B77F558A4F46

Interval #1 Information Recording

Start Time	7:00
End Time	8:00
Total Time (min)	60

Volumes adjusted by Growth Factors.

Run Number	1	10	2	3	4	5	6
Vehs Entered	12248	12282	12069	12178	12252	11966	12329
Vehs Exited	12137	12197	11896	12029	12190	11865	12145
Starting Vehs	695	742	670	675	689	698	638
Ending Vehs	806	827	843	824	751	799	822
Travel Distance (mi)	10305	10398	10167	10325	10278	10098	10387
Travel Time (hr)	1682.8	1576.0	1748.6	1634.4	1655.0	1776.0	1630.3
Total Delay (hr)	1395.7	1286.1	1465.3	1346.9	1368.2	1494.0	1341.4
Total Stops	16098	15876	15885	16403	16391	15556	16587
Fuel Used (gal)	671.4	648.7	683.4	659.5	665.6	685.9	661.3

Interval #1 Information Recording

Start Time	7:00
End Time	8:00
Total Time (min)	60

Volumes adjusted by Growth Factors.

Run Number	7	8	9	Avg
Vehs Entered	12096	12124	12078	12166
Vehs Exited	12028	12054	11991	12053
Starting Vehs	705	714	703	694
Ending Vehs	773	784	790	797
Travel Distance (mi)	10252	10309	10214	10273
Travel Time (hr)	1834.1	1746.1	1799.1	1708.3
Total Delay (hr)	1548.4	1458.8	1514.7	1422.0
Total Stops	15790	16541	16358	16142
Fuel Used (gal)	704.1	683.9	695.5	675.9

DocuSign Envelope ID: 5C03745C-4B01-4834-A65D-B77F558A4F46

Intersection: 1: NC 191 (Brevard Rd) & Commercial Access

Movement	EB	EB	EB	WB	WB	WB	SB	SB
Directions Served	L	T	T	T	T	R	L	R
Maximum Queue (ft)	126	168	147	268	269	136	181	167
Average Queue (ft)	51	86	62	115	123	17	82	59
95th Queue (ft)	106	147	132	219	227	78	154	130
Link Distance (ft)		1574	1574	477	477		1052	
Upstream Blk Time (%)								
Queuing Penalty (veh)								
Storage Bay Dist (ft)	150					175		175
Storage Blk Time (%)	0	0		2	1	0	1	0
Queuing Penalty (veh)	1	0		0	1	0	1	0

Intersection: 2: I-26 SEB Ramps & NC 191 (Brevard Rd)

Movement	EB	EB	EB	WB	WB	WB	NB	NB	NB
Directions Served	T	T	R	L	T	T	L	L	R
Maximum Queue (ft)	305	321	235	223	308	144	210	193	84
Average Queue (ft)	202	197	55	129	72	70	127	108	30
95th Queue (ft)	282	285	156	220	176	113	193	178	67
Link Distance (ft)	477	477			1125	1125	241	241	241
Upstream Blk Time (%)							0	0	
Queuing Penalty (veh)							0	0	
Storage Bay Dist (ft)			225	200					
Storage Blk Time (%)		3	0	2					
Queuing Penalty (veh)		4	0	9					

Intersection: 3: NC 191 (Brevard Rd) & I-26 NWB Ramps

Movement	EB	EB	EB	EB	WB	WB	WB	SB	SB	SB
Directions Served	L	L	T	T	T	T	R	L	L	R
Maximum Queue (ft)	210	145	108	127	339	289	96	230	225	234
Average Queue (ft)	101	45	36	42	227	184	13	135	128	108
95th Queue (ft)	173	105	91	101	307	271	59	205	201	196
Link Distance (ft)			721	721	1510	1510		771	771	
Upstream Blk Time (%)										
Queuing Penalty (veh)										
Storage Bay Dist (ft)	625	625					200			400
Storage Blk Time (%)						2	0			
Queuing Penalty (veh)						1	0			

DocuSign Envelope ID: 5C03745C-4B01-4834-A65D-B77F558A4F46

Intersection: 4: Blue Ridge Pkwy Access & Frederick Law Olmsted Way

Movement	EB	EB	NB	SB
Directions Served	L	R	L	TR
Maximum Queue (ft)	54	35	32	5
Average Queue (ft)	22	13	6	0
95th Queue (ft)	44	37	24	3
Link Distance (ft)		1031		166
Upstream Blk Time (%)				
Queuing Penalty (veh)				
Storage Bay Dist (ft)	75		275	
Storage Blk Time (%)	0			
Queuing Penalty (veh)	0			

Intersection: 5: NC 191 (Brevard Rd) & Blue Ridge Pkwy Access/NC 191 Connector

Movement	EB	EB	EB	WB	WB	WB	NB	NB	NB	NB	SB	SB
Directions Served	L	T	TR	L	T	R	L	T	T	R	L	L
Maximum Queue (ft)	80	121	105	129	156	206	164	263	254	170	180	183
Average Queue (ft)	31	60	42	52	63	96	48	167	144	69	116	98
95th Queue (ft)	68	105	88	104	127	182	113	243	232	152	169	167
Link Distance (ft)	166	166	166		1093	1093		1524	1524			
Upstream Blk Time (%)												
Queuing Penalty (veh)												
Storage Bay Dist (ft)				200			175			150	200	200
Storage Blk Time (%)					0			6	5	0	0	0
Queuing Penalty (veh)					0			4	7	1	0	0

Intersection: 5: NC 191 (Brevard Rd) & Blue Ridge Pkwy Access/NC 191 Connector

Movement	SB	SB
Directions Served	T	TR
Maximum Queue (ft)	223	230
Average Queue (ft)	107	111
95th Queue (ft)	184	192
Link Distance (ft)	1559	1559
Upstream Blk Time (%)		
Queuing Penalty (veh)		
Storage Bay Dist (ft)		
Storage Blk Time (%)	0	
Queuing Penalty (veh)	1	

DocuSign Envelope ID: 5C03745C-4B01-4834-A65D-B77F558A4F46

Intersection: 6: HE-0001 SEB Ramp & NC 191 Connector

Movement	EB	WB	SB	SB
Directions Served	R	LT	T	R
Maximum Queue (ft)	10	5	12	265
Average Queue (ft)	1	0	0	97
95th Queue (ft)	9	3	7	228
Link Distance (ft)		231	988	
Upstream Blk Time (%)				
Queuing Penalty (veh)				
Storage Bay Dist (ft)	200			325
Storage Blk Time (%)				
Queuing Penalty (veh)				

Intersection: 7: HE-0001 NWB Ramp & NC 191 Connector

Movement	EB	NB
Directions Served	L	LT
Maximum Queue (ft)	209	225
Average Queue (ft)	111	119
95th Queue (ft)	181	193
Link Distance (ft)	231	972
Upstream Blk Time (%)	0	
Queuing Penalty (veh)	0	
Storage Bay Dist (ft)		
Storage Blk Time (%)		
Queuing Penalty (veh)		

Intersection: 8: NC 146 (Long Shoals Rd) & Clayton Rd

Movement	EB	EB	WB	WB	SB	SB	SB
Directions Served	L	T	T	R	L	L	R
Maximum Queue (ft)	154	382	212	62	352	319	123
Average Queue (ft)	54	188	65	15	217	191	42
95th Queue (ft)	118	349	151	48	309	283	97
Link Distance (ft)		1540	1733	1733	1042	1042	
Upstream Blk Time (%)							
Queuing Penalty (veh)							
Storage Bay Dist (ft)	500						400
Storage Blk Time (%)			0			0	
Queuing Penalty (veh)			0			0	

DocuSign Envelope ID: 5C03745C-4B01-4834-A65D-B77F558A4F46

Intersection: 9: Ledbetter Rd & NC 146 (Long Shoals Rd)

Movement	EB	EB	WB	NB	NB
Directions Served	T	TR	L	L	R
Maximum Queue (ft)	37	47	228	225	1048
Average Queue (ft)	1	2	90	122	1001
95th Queue (ft)	28	29	184	301	1111
Link Distance (ft)	1733	1733			994
Upstream Blk Time (%)					91
Queuing Penalty (veh)					0
Storage Bay Dist (ft)			325	200	
Storage Blk Time (%)				0	100
Queuing Penalty (veh)				0	47

Intersection: 10: I-26 Ramp & NC 146 (Long Shoals Rd)

Movement	EB	EB	EB	EB	EB	WB	WB	WB	WB	SE	SE	SE
Directions Served	L	L	T	T	>	L	L	T	T	L	L	>
Maximum Queue (ft)	362	379	522	468	157	298	244	265	259	253	258	90
Average Queue (ft)	179	124	276	254	36	273	194	166	151	217	219	4
95th Queue (ft)	316	303	453	412	319	291	321	264	257	235	244	55
Link Distance (ft)			887	887	887	244	244	244	244	142	142	142
Upstream Blk Time (%)			0	0	3	73	4	3	2	93	95	
Queuing Penalty (veh)			1	1	13	201	12	8	6	0	0	
Storage Bay Dist (ft)	475	475										
Storage Blk Time (%)	0	0	1									
Queuing Penalty (veh)	0	2	2									

Intersection: 10: I-26 Ramp & NC 146 (Long Shoals Rd)

Movement	B1040	B1040	B1040	B1039	B1039	NW	NW
Directions Served	T	T	T	T	T	L	L
Maximum Queue (ft)	521	511	361	538	543	191	168
Average Queue (ft)	487	483	87	506	510	86	75
95th Queue (ft)	506	501	267	526	531	163	144
Link Distance (ft)	410	410	410	487	487	414	414
Upstream Blk Time (%)	97	93		86	80		
Queuing Penalty (veh)	0	0		0	0		
Storage Bay Dist (ft)							
Storage Blk Time (%)							
Queuing Penalty (veh)							

DocuSign Envelope ID: 5C03745C-4B01-4834-A65D-B77F558A4F46

Intersection: 11: I-26 NWB Ramp & NC 146 (Long Shoals Rd)

Movement	EB	EB	WB	WB	WB	NB	NB
Directions Served	T	T	T	T	R	R	R
Maximum Queue (ft)	286	289	526	561	300	301	315
Average Queue (ft)	266	264	486	385	54	283	288
95th Queue (ft)	297	293	607	703	237	292	303
Link Distance (ft)	244	244	500	500		281	281
Upstream Blk Time (%)	12	11	27	6		71	71
Queuing Penalty (veh)	139	123	241	54		282	284
Storage Bay Dist (ft)					275		
Storage Blk Time (%)				5	0		
Queuing Penalty (veh)				30	0		

Intersection: 12: Skyland Inn Dr/Schenck Pkwy & NC 146 (Long Shoals Rd)

Movement	EB	EB	EB	EB	EB	WB	WB	WB	WB	NB	SB	SB
Directions Served	L	L	T	T	R	L	T	T	R	LTR	L	LT
Maximum Queue (ft)	316	328	89	116	14	275	1586	1602	250	239	382	920
Average Queue (ft)	197	208	32	44	1	71	1404	1453	207	124	211	565
95th Queue (ft)	299	317	72	87	7	237	1919	1874	336	220	349	1110
Link Distance (ft)			500	500			1546	1546		656		932
Upstream Blk Time (%)							22	62				17
Queuing Penalty (veh)							0	0				0
Storage Bay Dist (ft)	350	350			400	250			225		450	
Storage Blk Time (%)	0	0				0	71	59	3		0	0
Queuing Penalty (veh)	0	0				0	19	233	17		0	0

Intersection: 12: Skyland Inn Dr/Schenck Pkwy & NC 146 (Long Shoals Rd)

Movement	SB
Directions Served	R
Maximum Queue (ft)	939
Average Queue (ft)	675
95th Queue (ft)	1156
Link Distance (ft)	932
Upstream Blk Time (%)	36
Queuing Penalty (veh)	0
Storage Bay Dist (ft)	
Storage Blk Time (%)	
Queuing Penalty (veh)	

DocuSign Envelope ID: 5C03745C-4B01-4834-A65D-B77F558A4F46

Intersection: 100: Biltmore Park West Access/Pratt & Whitney Access & NC 191 Connector

Movement	EB	EB	WB	WB	NB	NB	SB	SB
Directions Served	LT	R	LT	R	LT	R	LT	R
Maximum Queue (ft)	460	212	252	189	81	54	115	41
Average Queue (ft)	187	59	101	18	33	17	46	5
95th Queue (ft)	377	209	197	110	66	51	89	24
Link Distance (ft)	2979		1498		989		968	
Upstream Blk Time (%)								
Queuing Penalty (veh)								
Storage Bay Dist (ft)		200		200		200		200
Storage Blk Time (%)	12	0	1	0			0	
Queuing Penalty (veh)	14	1	5	0			0	

Intersection: 1028: I-26 SEB Ramps

Movement
Directions Served
Maximum Queue (ft)
Average Queue (ft)
95th Queue (ft)
Link Distance (ft)
Upstream Blk Time (%)
Queuing Penalty (veh)
Storage Bay Dist (ft)
Storage Blk Time (%)
Queuing Penalty (veh)

Intersection: 1033: I-26 NWB Ramps

Movement
Directions Served
Maximum Queue (ft)
Average Queue (ft)
95th Queue (ft)
Link Distance (ft)
Upstream Blk Time (%)
Queuing Penalty (veh)
Storage Bay Dist (ft)
Storage Blk Time (%)
Queuing Penalty (veh)

DocuSign Envelope ID: 5C03745C-4B01-4834-A65D-B77F558A4F46

Intersection: 1041: Bend

Movement	SB
Directions Served	T
Maximum Queue (ft)	100
Average Queue (ft)	3
95th Queue (ft)	70
Link Distance (ft)	466
Upstream Blk Time (%)	0
Queuing Penalty (veh)	0
Storage Bay Dist (ft)	
Storage Blk Time (%)	
Queuing Penalty (veh)	

Intersection: 1043: I-26 Ramp & I-26 NWB Ramp

Movement	WB	NB
Directions Served	T	L
Maximum Queue (ft)	207	25
Average Queue (ft)	56	1
95th Queue (ft)	153	24
Link Distance (ft)	341	221
Upstream Blk Time (%)		0
Queuing Penalty (veh)		0
Storage Bay Dist (ft)		
Storage Blk Time (%)		
Queuing Penalty (veh)		

Intersection: 1044: I-26 Ramp & I-26 NWB Ramp

Movement	NB	NB	NB	B1045	B1045	B1046
Directions Served	L	LT	T	T	T	T
Maximum Queue (ft)	134	265	177	229	350	544
Average Queue (ft)	7	235	150	16	322	506
95th Queue (ft)	55	253	189	108	343	582
Link Distance (ft)	158	158	158	249	249	487
Upstream Blk Time (%)	0	65	14	0	60	60
Queuing Penalty (veh)	0	0	0	0	0	0
Storage Bay Dist (ft)						
Storage Blk Time (%)						
Queuing Penalty (veh)						

Network Summary

Network wide Queuing Penalty: 1767

DocuSign Envelope ID: 5C03745C-4B01-4834-A65D-B77F558A4F46

APPENDIX C

2045 Build Left Entrance/Exit PM SimTraffic Report

DocuSign Envelope ID: 5C03745C-4B01-4834-A65D-B77F558A4F46

SimTraffic Simulation Summary
2045 Build Scenario 2 PM

06/09/2022

Summary of All Intervals

Run Number	1	10	2	3	4	5	6
Start Time	4:50	4:50	4:50	4:50	4:50	4:50	4:50
End Time	6:00	6:00	6:00	6:00	6:00	6:00	6:00
Total Time (min)	70	70	70	70	70	70	70
Time Recorded (min)	60	60	60	60	60	60	60
# of Intervals	2	2	2	2	2	2	2
# of Recorded Intervals	1	1	1	1	1	1	1
Vehs Entered	13157	12907	12873	12577	12726	12841	12978
Vehs Exited	13099	12879	12754	12494	12686	12796	12861
Starting Vehs	830	847	783	769	807	799	770
Ending Vehs	888	875	902	852	847	844	887
Travel Distance (mi)	11115	11057	10939	10656	10848	10962	10983
Travel Time (hr)	2058.4	2396.7	2299.6	2277.2	2371.8	2120.0	2212.1
Total Delay (hr)	1750.1	2092.1	1998.7	1983.5	2072.6	1817.6	1909.1
Total Stops	17996	17652	17510	16542	16999	17398	17679
Fuel Used (gal)	779.2	852.6	827.9	812.0	842.3	785.9	808.5

Summary of All Intervals

Run Number	7	8	9	Avg
Start Time	4:50	4:50	4:50	4:50
End Time	6:00	6:00	6:00	6:00
Total Time (min)	70	70	70	70
Time Recorded (min)	60	60	60	60
# of Intervals	2	2	2	2
# of Recorded Intervals	1	1	1	1
Vehs Entered	13038	12961	13088	12916
Vehs Exited	12971	12914	13017	12847
Starting Vehs	798	880	799	806
Ending Vehs	865	927	870	877
Travel Distance (mi)	11148	11079	11075	10986
Travel Time (hr)	2420.9	2316.3	2150.0	2262.3
Total Delay (hr)	2113.4	2010.9	1844.4	1959.2
Total Stops	17137	17687	17643	17420
Fuel Used (gal)	859.8	834.5	798.3	820.1

Interval #0 Information Seeding

Start Time	4:50
End Time	5:00
Total Time (min)	10

Volumes adjusted by Growth Factors.

No data recorded this interval.

DocuSign Envelope ID: 5C03745C-4B01-4834-A65D-B77F558A4F46

Interval #1 Information Recording

Start Time	5:00
End Time	6:00
Total Time (min)	60

Volumes adjusted by Growth Factors.

Run Number	1	10	2	3	4	5	6
Vehs Entered	13157	12907	12873	12577	12726	12841	12978
Vehs Exited	13099	12879	12754	12494	12686	12796	12861
Starting Vehs	830	847	783	769	807	799	770
Ending Vehs	888	875	902	852	847	844	887
Travel Distance (mi)	11115	11057	10939	10656	10848	10962	10983
Travel Time (hr)	2058.4	2396.7	2299.6	2277.2	2371.8	2120.0	2212.1
Total Delay (hr)	1750.1	2092.1	1998.7	1983.5	2072.6	1817.6	1909.1
Total Stops	17996	17652	17510	16542	16999	17398	17679
Fuel Used (gal)	779.2	852.6	827.9	812.0	842.3	785.9	808.5

Interval #1 Information Recording

Start Time	5:00
End Time	6:00
Total Time (min)	60

Volumes adjusted by Growth Factors.

Run Number	7	8	9	Avg
Vehs Entered	13038	12961	13088	12916
Vehs Exited	12971	12914	13017	12847
Starting Vehs	798	880	799	806
Ending Vehs	865	927	870	877
Travel Distance (mi)	11148	11079	11075	10986
Travel Time (hr)	2420.9	2316.3	2150.0	2262.3
Total Delay (hr)	2113.4	2010.9	1844.4	1959.2
Total Stops	17137	17687	17643	17420
Fuel Used (gal)	859.8	834.5	798.3	820.1

DocuSign Envelope ID: 5C03745C-4B01-4834-A65D-B77F558A4F46

Intersection: 1: NC 191 (Brevard Rd) & Commercial Access

Movement	EB	EB	EB	WB	WB	WB	SB	SB
Directions Served	L	T	T	T	T	R	L	R
Maximum Queue (ft)	169	284	276	301	305	199	180	133
Average Queue (ft)	83	118	103	135	146	35	79	49
95th Queue (ft)	152	225	211	252	259	132	146	99
Link Distance (ft)		1574	1574	477	477		1052	
Upstream Blk Time (%)								
Queuing Penalty (veh)								
Storage Bay Dist (ft)	150					175		175
Storage Blk Time (%)	2	2		4	3	0	0	0
Queuing Penalty (veh)	13	2		0	3	0	0	0

Intersection: 2: I-26 SEB Ramps & NC 191 (Brevard Rd)

Movement	EB	EB	EB	WB	WB	WB	NB	NB	NB
Directions Served	T	T	R	L	T	T	L	L	R
Maximum Queue (ft)	435	460	250	223	349	216	228	219	109
Average Queue (ft)	278	271	145	145	86	67	136	117	42
95th Queue (ft)	414	417	295	230	255	148	203	189	88
Link Distance (ft)	477	477			1125	1125	241	241	241
Upstream Blk Time (%)	0	0					0	0	
Queuing Penalty (veh)	3	3					0	0	
Storage Bay Dist (ft)			225	200					
Storage Blk Time (%)		15	0	4	0				
Queuing Penalty (veh)		36	2	18	0				

Intersection: 3: NC 191 (Brevard Rd) & I-26 NWB Ramps

Movement	EB	EB	EB	EB	WB	WB	WB	SB	SB	SB
Directions Served	L	L	T	T	T	T	R	L	L	R
Maximum Queue (ft)	254	187	166	170	390	355	209	233	220	228
Average Queue (ft)	140	82	65	69	238	201	28	136	129	119
95th Queue (ft)	222	160	141	141	347	316	122	201	195	193
Link Distance (ft)			721	721	1510	1510		771	771	
Upstream Blk Time (%)										
Queuing Penalty (veh)										
Storage Bay Dist (ft)	625	625					200			400
Storage Blk Time (%)						5	0			
Queuing Penalty (veh)						3	0			

DocuSign Envelope ID: 5C03745C-4B01-4834-A65D-B77F558A4F46

Intersection: 4: Blue Ridge Pkwy Access & Frederick Law Olmsted Way

Movement	EB	EB	NB	NB
Directions Served	L	R	L	T
Maximum Queue (ft)	77	46	28	47
Average Queue (ft)	32	13	3	3
95th Queue (ft)	62	39	17	32
Link Distance (ft)		1031		1004
Upstream Blk Time (%)				
Queuing Penalty (veh)				
Storage Bay Dist (ft)	75		275	
Storage Blk Time (%)	1			
Queuing Penalty (veh)	0			

Intersection: 5: NC 191 (Brevard Rd) & Blue Ridge Pkwy Access/NC 191 Connector

Movement	EB	EB	EB	WB	WB	WB	NB	NB	NB	NB	SB	SB
Directions Served	L	T	TR	L	T	R	L	T	T	R	L	L
Maximum Queue (ft)	166	158	160	194	211	440	200	404	391	175	156	197
Average Queue (ft)	89	91	93	90	92	249	72	259	237	67	96	75
95th Queue (ft)	158	148	149	168	171	417	185	367	356	176	146	150
Link Distance (ft)	166	166	166		1093	1093		1524	1524			
Upstream Blk Time (%)	3	0	0									
Queuing Penalty (veh)	3	0	0									
Storage Bay Dist (ft)				200			175			150	200	200
Storage Blk Time (%)				1	0		0	25	18	0	0	0
Queuing Penalty (veh)				1	0		0	14	16	0	0	0

Intersection: 5: NC 191 (Brevard Rd) & Blue Ridge Pkwy Access/NC 191 Connector

Movement	SB	SB
Directions Served	T	TR
Maximum Queue (ft)	265	238
Average Queue (ft)	129	116
95th Queue (ft)	217	205
Link Distance (ft)	1560	1560
Upstream Blk Time (%)		
Queuing Penalty (veh)		
Storage Bay Dist (ft)		
Storage Blk Time (%)	1	
Queuing Penalty (veh)	2	

DocuSign Envelope ID: 5C03745C-4B01-4834-A65D-B77F558A4F46

Intersection: 6: HE-0001 SEB Ramp & NC 191 Connector

Movement	EB	EB	WB	SB	SB
Directions Served	T	R	LT	T	R
Maximum Queue (ft)	49	44	12	18	189
Average Queue (ft)	2	2	0	1	50
95th Queue (ft)	24	24	8	9	161
Link Distance (ft)	310		231	988	
Upstream Blk Time (%)					
Queuing Penalty (veh)					
Storage Bay Dist (ft)		200			325
Storage Blk Time (%)					
Queuing Penalty (veh)					

Intersection: 7: HE-0001 NWB Ramp & NC 191 Connector

Movement	EB	NB
Directions Served	L	LT
Maximum Queue (ft)	240	240
Average Queue (ft)	149	123
95th Queue (ft)	226	204
Link Distance (ft)	231	972
Upstream Blk Time (%)	0	
Queuing Penalty (veh)	2	
Storage Bay Dist (ft)		
Storage Blk Time (%)		
Queuing Penalty (veh)		

Intersection: 8: NC 146 (Long Shoals Rd) & Clayton Rd

Movement	EB	EB	WB	WB	SB	SB	SB
Directions Served	L	T	T	R	L	L	R
Maximum Queue (ft)	156	358	211	73	304	275	140
Average Queue (ft)	67	161	78	19	184	158	44
95th Queue (ft)	134	317	170	58	272	246	102
Link Distance (ft)		1540	1733	1733	1042	1042	
Upstream Blk Time (%)							
Queuing Penalty (veh)							
Storage Bay Dist (ft)	500						400
Storage Blk Time (%)		0					
Queuing Penalty (veh)		0					

DocuSign Envelope ID: 5C03745C-4B01-4834-A65D-B77F558A4F46

Intersection: 9: Ledbetter Rd & NC 146 (Long Shoals Rd)

Movement	EB	EB	WB	WB	WB	NB	NB
Directions Served	T	TR	L	T	T	L	R
Maximum Queue (ft)	56	81	345	408	222	225	1019
Average Queue (ft)	6	7	179	28	12	109	713
95th Queue (ft)	61	57	324	210	132	283	1184
Link Distance (ft)	1733	1733		887	887		994
Upstream Blk Time (%)							24
Queuing Penalty (veh)							0
Storage Bay Dist (ft)			325			200	
Storage Blk Time (%)			3	0		2	90
Queuing Penalty (veh)			13	0		5	25

Intersection: 10: I-26 Ramp & NC 146 (Long Shoals Rd)

Movement	EB	EB	EB	EB	EB	WB	WB	WB	WB	SE	SE	SE
Directions Served	L	L	T	T	>	L	L	T	T	L	L	>
Maximum Queue (ft)	415	441	639	581	339	300	244	272	223	253	252	185
Average Queue (ft)	279	238	271	212	74	275	204	144	89	219	220	16
95th Queue (ft)	474	494	634	507	480	293	323	256	193	238	241	111
Link Distance (ft)			887	887	887	244	244	244	244	142	142	142
Upstream Blk Time (%)			1	1	6	78	4	1	0	91	95	
Queuing Penalty (veh)			6	2	25	299	15	5	1	0	0	
Storage Bay Dist (ft)	475	475										
Storage Blk Time (%)	4	7	2									
Queuing Penalty (veh)	15	26	5									

Intersection: 10: I-26 Ramp & NC 146 (Long Shoals Rd)

Movement	B1040	B1040	B1040	B1039	B1039	NW	NW
Directions Served	T	T	T	T	T	L	L
Maximum Queue (ft)	521	507	393	538	542	232	199
Average Queue (ft)	489	480	103	506	509	121	90
95th Queue (ft)	508	500	313	529	531	199	169
Link Distance (ft)	410	410	410	487	487	414	414
Upstream Blk Time (%)	95	89		82	77		
Queuing Penalty (veh)	0	0		0	0		
Storage Bay Dist (ft)							
Storage Blk Time (%)							
Queuing Penalty (veh)							

DocuSign Envelope ID: 5C03745C-4B01-4834-A65D-B77F558A4F46

Intersection: 11: I-26 NWB Ramp & NC 146 (Long Shoals Rd)

Movement	EB	EB	WB	WB	WB	NB	NB
Directions Served	T	T	T	T	R	R	R
Maximum Queue (ft)	283	278	522	540	277	295	299
Average Queue (ft)	249	240	508	321	41	279	273
95th Queue (ft)	309	306	539	675	197	307	319
Link Distance (ft)	244	244	500	500		281	281
Upstream Blk Time (%)	7	5	57	12		47	33
Queuing Penalty (veh)	62	46	713	148		129	92
Storage Bay Dist (ft)					275		
Storage Blk Time (%)				4	0		
Queuing Penalty (veh)				42	1		

Intersection: 12: Skyland Inn Dr/Schenck Pkwy & NC 146 (Long Shoals Rd)

Movement	EB	EB	EB	EB	EB	WB	WB	WB	WB	NB	SB	SB
Directions Served	L	L	T	T	R	L	T	T	R	LTR	L	LT
Maximum Queue (ft)	305	316	269	259	42	252	1589	1603	250	700	295	976
Average Queue (ft)	189	204	155	162	5	32	1554	1571	199	575	76	930
95th Queue (ft)	276	291	237	236	23	164	1631	1593	339	859	214	1104
Link Distance (ft)			500	500			1546	1546		656		932
Upstream Blk Time (%)			0				35	85		66		62
Queuing Penalty (veh)			0				0	0		0		0
Storage Bay Dist (ft)	350	350			400	250			225		450	
Storage Blk Time (%)	0	0	0	0		0	85	58	2		0	0
Queuing Penalty (veh)	0	0	0	0		0	14	266	19		0	1

Intersection: 12: Skyland Inn Dr/Schenck Pkwy & NC 146 (Long Shoals Rd)

Movement	SB
Directions Served	R
Maximum Queue (ft)	988
Average Queue (ft)	952
95th Queue (ft)	971
Link Distance (ft)	932
Upstream Blk Time (%)	96
Queuing Penalty (veh)	0
Storage Bay Dist (ft)	
Storage Blk Time (%)	
Queuing Penalty (veh)	

DocuSign Envelope ID: 5C03745C-4B01-4834-A65D-B77F558A4F46

Intersection: 100: Biltmore Park West Access/Pratt & Whitney Access & NC 191 Connector

Movement	EB	EB	WB	WB	NB	NB	SB	SB
Directions Served	LT	R	LT	R	LT	R	LT	R
Maximum Queue (ft)	391	225	310	201	128	71	845	225
Average Queue (ft)	173	43	108	23	50	32	447	151
95th Queue (ft)	331	185	235	134	100	66	968	316
Link Distance (ft)	2979		1497		989		968	
Upstream Blk Time (%)							10	
Queuing Penalty (veh)							0	
Storage Bay Dist (ft)		200		200		200		200
Storage Blk Time (%)	11	0	3	0	0		56	0
Queuing Penalty (veh)	7	0	7	0	0		102	2

Intersection: 1028: I-26 SEB Ramps

Movement	NW
Directions Served	T
Maximum Queue (ft)	10
Average Queue (ft)	0
95th Queue (ft)	9
Link Distance (ft)	99
Upstream Blk Time (%)	
Queuing Penalty (veh)	
Storage Bay Dist (ft)	
Storage Blk Time (%)	
Queuing Penalty (veh)	

Intersection: 1033: I-26 NWB Ramps

Movement
Directions Served
Maximum Queue (ft)
Average Queue (ft)
95th Queue (ft)
Link Distance (ft)
Upstream Blk Time (%)
Queuing Penalty (veh)
Storage Bay Dist (ft)
Storage Blk Time (%)
Queuing Penalty (veh)

DocuSign Envelope ID: 5C03745C-4B01-4834-A65D-B77F558A4F46

Intersection: 1041: Bend

Movement	SB
Directions Served	T
Maximum Queue (ft)	48
Average Queue (ft)	2
95th Queue (ft)	47
Link Distance (ft)	466
Upstream Blk Time (%)	0
Queuing Penalty (veh)	0
Storage Bay Dist (ft)	
Storage Blk Time (%)	
Queuing Penalty (veh)	

Intersection: 1043: I-26 Ramp & I-26 NWB Ramp

Movement	WB	NB
Directions Served	T	L
Maximum Queue (ft)	130	28
Average Queue (ft)	17	2
95th Queue (ft)	79	36
Link Distance (ft)	341	221
Upstream Blk Time (%)		0
Queuing Penalty (veh)		0
Storage Bay Dist (ft)		
Storage Blk Time (%)		
Queuing Penalty (veh)		

Intersection: 1044: I-26 Ramp & I-26 NWB Ramp

Movement	NB	NB	NB	B1045	B1045	B1046
Directions Served	L	LT	T	T	T	T
Maximum Queue (ft)	121	254	174	53	280	215
Average Queue (ft)	11	167	109	3	100	62
95th Queue (ft)	73	311	222	50	310	308
Link Distance (ft)	158	158	158	249	249	487
Upstream Blk Time (%)	0	28	5		10	3
Queuing Penalty (veh)	0	0	0		0	0
Storage Bay Dist (ft)						
Storage Blk Time (%)						
Queuing Penalty (veh)						

Network Summary

Network wide Queuing Penalty: 2221

DocuSign Envelope ID: 5C03745C-4B01-4834-A65D-B77F558A4F46

APPENDIX D

2045 Build Left Entrance/Exit AM Synchro Report

DocuSign Envelope ID: 5C03745C-4B01-4834-A65D-B77F558A4F46

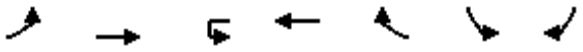

Lane Group	EBL	EBT	WBU	WBT	WBR	SBL	SBR
Lane Configurations							
Traffic Volume (vph)	63	1022	0	1128	90	114	89
Future Volume (vph)	63	1022	0	1128	90	114	89
Ideal Flow (vphpl)	1900	1900	1900	1900	1900	1900	1900
Storage Length (ft)	150		150		175	0	175
Storage Lanes	1		1		1	1	1
Taper Length (ft)	25		25			25	
Lane Util. Factor	1.00	0.95	1.00	0.95	1.00	1.00	1.00
Frt					0.850		0.850
Flt Protected	0.950					0.950	
Satd. Flow (prot)	1703	3406	1792	3406	1524	1703	1524
Flt Permitted	0.950					0.950	
Satd. Flow (perm)	1703	3406	1792	3406	1524	1703	1524
Right Turn on Red					No		No
Satd. Flow (RTOR)							
Link Speed (mph)		45		45		25	
Link Distance (ft)		1606		558		1108	
Travel Time (s)		24.3		8.5		30.2	
Peak Hour Factor	0.90	0.90	0.90	0.90	0.90	0.90	0.90
Heavy Vehicles (%)	6%	6%	6%	6%	6%	6%	6%
Adj. Flow (vph)	70	1136	0	1253	100	127	99
Shared Lane Traffic (%)							
Lane Group Flow (vph)	70	1136	0	1253	100	127	99
Enter Blocked Intersection	No	No	No	No	No	No	No
Lane Alignment	Left	Left	R NA	Left	Right	Left	Right
Median Width(ft)		12		12		12	
Link Offset(ft)		0		0		0	
Crosswalk Width(ft)		16		16		16	
Two way Left Turn Lane							
Headway Factor	1.00	1.00	1.00	1.00	1.00	1.00	1.00
Turning Speed (mph)	15		9		9	15	9
Number of Detectors	1	2	1	2	1	1	1
Detector Template	Left	Thru	Left	Thru	Right	Left	Right
Leading Detector (ft)	20	100	20	100	20	20	20
Trailing Detector (ft)	0	0	0	0	0	0	0
Detector 1 Position(ft)	0	0	0	0	0	0	0
Detector 1 Size(ft)	20	6	20	6	20	20	20
Detector 1 Type	Cl+Ex	Cl+Ex	Cl+Ex	Cl+Ex	Cl+Ex	Cl+Ex	Cl+Ex
Detector 1 Channel							
Detector 1 Extend (s)	0.0	0.0	0.0	0.0	0.0	0.0	0.0
Detector 1 Queue (s)	0.0	0.0	0.0	0.0	0.0	0.0	0.0
Detector 1 Delay (s)	0.0	0.0	0.0	0.0	0.0	0.0	0.0
Detector 2 Position(ft)		94		94			
Detector 2 Size(ft)		6		6			
Detector 2 Type		Cl+Ex		Cl+Ex			
Detector 2 Channel							
Detector 2 Extend (s)		0.0		0.0			
Turn Type	Prot	NA	Prot	NA	pm+ov	Prot	pm+ov
Protected Phases	5	2	1	6	4	4	5

DocuSign Envelope ID: 5C03745C-4B01-4834-A65D-B77F558A4F46

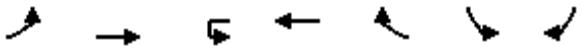

Lane Group	EBL	EBT	WBU	WBT	WBR	SBL	SBR
Permitted Phases					6		4
Detector Phase	5	2	1	6	4	4	5
Switch Phase							
Minimum Initial (s)	7.0	12.0	7.0	12.0	7.0	7.0	7.0
Minimum Split (s)	13.1	18.8	11.9	35.8	36.5	36.5	13.1
Total Split (s)	16.0	71.0	12.0	67.0	37.0	37.0	16.0
Total Split (%)	13.3%	59.2%	10.0%	55.8%	30.8%	30.8%	13.3%
Maximum Green (s)	9.9	64.2	7.1	60.2	30.5	30.5	9.9
Yellow Time (s)	3.0	4.9	3.0	4.9	3.0	3.0	3.0
All-Red Time (s)	3.1	1.9	1.9	1.9	3.5	3.5	3.1
Lost Time Adjust (s)	-1.1	-1.8	0.1	-1.8	-1.8	-1.5	-1.1
Total Lost Time (s)	5.0	5.0	5.0	5.0	4.7	5.0	5.0
Lead/Lag	Lag	Lag	Lead	Lead			Lag
Lead-Lag Optimize?	Yes	Yes	Yes	Yes			Yes
Vehicle Extension (s)	2.0	6.0	2.0	6.0	2.0	2.0	2.0
Minimum Gap (s)	0.2	3.0	0.2	3.0	0.2	0.2	0.2
Time Before Reduce (s)	0.0	15.0	0.0	15.0	0.0	0.0	0.0
Time To Reduce (s)	0.0	30.0	0.0	30.0	0.0	0.0	0.0
Recall Mode	None	C-Max	None	C-Max	None	None	None
Walk Time (s)				7.0	7.0	7.0	
Flash Dont Walk (s)				22.0	23.0	23.0	
Pedestrian Calls (#/hr)				0	0	0	
Act Effct Green (s)	11.0	95.1		79.1	99.3	14.9	30.9
Actuated g/C Ratio	0.09	0.79		0.66	0.83	0.12	0.26
v/c Ratio	0.45	0.42		0.56	0.08	0.60	0.25
Control Delay	61.4	4.8		9.2	1.2	61.1	36.0
Queue Delay	0.0	0.0		0.2	0.0	0.0	0.0
Total Delay	61.4	4.8		9.4	1.2	61.1	36.0
LOS	E	A		A	A	E	D
Approach Delay		8.1		8.8		50.1	
Approach LOS		A		A		D	
Queue Length 50th (ft)	52	117		204	6	94	61
Queue Length 95th (ft)	102	187		320	m11	152	103
Internal Link Dist (ft)		1526		478		1028	
Turn Bay Length (ft)	150				175		175
Base Capacity (vph)	156	2699		2245	1261	454	392
Starvation Cap Reductn	0	0		294	0	0	0
Spillback Cap Reductn	0	66		0	0	0	0
Storage Cap Reductn	0	0		0	0	0	0
Reduced v/c Ratio	0.45	0.43		0.64	0.08	0.28	0.25

Intersection Summary	
Area Type:	Other
Cycle Length: 120	
Actuated Cycle Length: 120	
Offset: 28 (23%), Referenced to phase 2:EBT and 6:WBT, Start of Green	
Natural Cycle: 90	
Control Type: Actuated-Coordinated	
Maximum v/c Ratio: 0.60	

DocuSign Envelope ID: 5C03745C-4B01-4834-A65D-B77F558A4F46

Intersection Signal Delay: 11.8	Intersection LOS: B
Intersection Capacity Utilization 55.8%	ICU Level of Service B
Analysis Period (min) 15	

m Volume for 95th percentile queue is metered by upstream signal.

Splits and Phases: 1: NC 191 (Brevard Rd) & Commercial Access

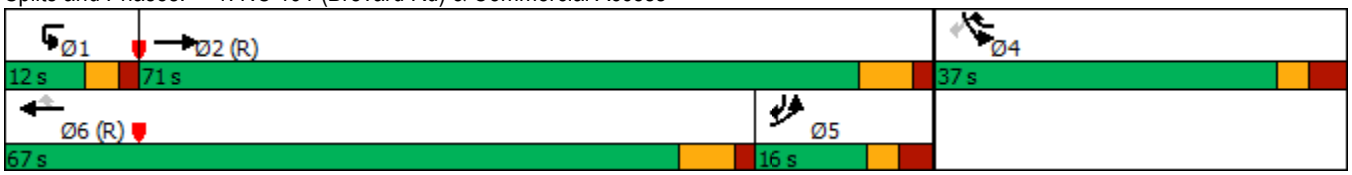

DocuSign Envelope ID: 5C03745C-4B01-4834-A65D-B77F558A4F46

Lane Group	EBT	EBR	WBL	WBT	NBL	NBR
Lane Configurations						
Traffic Volume (vph)	987	149	265	908	310	74
Future Volume (vph)	987	149	265	908	310	74
Ideal Flow (vphpl)	1900	1900	1900	1900	1900	1900
Grade (%)	-1%			-1%	0%	
Storage Length (ft)		225	200		0	0
Storage Lanes		1	1		2	1
Taper Length (ft)			25		25	
Lane Util. Factor	0.95	1.00	1.00	0.95	0.97	1.00
Frt		0.850				0.850
Flt Protected			0.950		0.950	
Satd. Flow (prot)	3423	1449	1620	3423	3303	1524
Flt Permitted			0.950		0.950	
Satd. Flow (perm)	3423	1449	1620	3423	3303	1524
Right Turn on Red		No				Yes
Satd. Flow (RTOR)						36
Link Speed (mph)	45			45	45	
Link Distance (ft)	558			1204	323	
Travel Time (s)	8.5			18.2	4.9	
Peak Hour Factor	0.90	0.90	0.90	0.90	0.90	0.90
Heavy Vehicles (%)	6%	12%	12%	6%	6%	6%
Adj. Flow (vph)	1097	166	294	1009	344	82
Shared Lane Traffic (%)						
Lane Group Flow (vph)	1097	166	294	1009	344	82
Enter Blocked Intersection	No	No	No	No	No	No
Lane Alignment	Left	Right	Left	Left	Left	Right
Median Width(ft)	12			12	40	
Link Offset(ft)	0			0	0	
Crosswalk Width(ft)	16			16	16	
Two way Left Turn Lane						
Headway Factor	0.99	0.99	0.99	0.99	1.00	1.00
Turning Speed (mph)		9	15		15	9
Number of Detectors	2	1	1	2	1	1
Detector Template	Thru	Right	Left	Thru	Left	Right
Leading Detector (ft)	100	20	20	100	20	20
Trailing Detector (ft)	0	0	0	0	0	0
Detector 1 Position(ft)	0	0	0	0	0	0
Detector 1 Size(ft)	6	20	20	6	20	20
Detector 1 Type	Cl+Ex	Cl+Ex	Cl+Ex	Cl+Ex	Cl+Ex	Cl+Ex
Detector 1 Channel						
Detector 1 Extend (s)	0.0	0.0	0.0	0.0	0.0	0.0
Detector 1 Queue (s)	0.0	0.0	0.0	0.0	0.0	0.0
Detector 1 Delay (s)	0.0	0.0	0.0	0.0	0.0	0.0
Detector 2 Position(ft)	94			94		
Detector 2 Size(ft)	6			6		
Detector 2 Type	Cl+Ex			Cl+Ex		
Detector 2 Channel						
Detector 2 Extend (s)	0.0			0.0		
Turn Type	NA	pm+ov	Prot	NA	Prot	pm+ov

DocuSign Envelope ID: 5C03745C-4B01-4834-A65D-B77F558A4F46



Lane Group	EBT	EBR	WBL	WBT	NBL	NBR
Protected Phases	2	4	1	6	4	1
Permitted Phases		2				4
Detector Phase	2	4	1	6	4	1
Switch Phase						
Minimum Initial (s)	12.0	7.0	10.0	12.0	7.0	10.0
Minimum Split (s)	18.0	13.9	16.3	18.6	13.9	16.3
Total Split (s)	57.0	24.0	39.0	96.0	24.0	39.0
Total Split (%)	47.5%	20.0%	32.5%	80.0%	20.0%	32.5%
Maximum Green (s)	51.0	17.1	32.7	89.4	17.1	32.7
Yellow Time (s)	4.4	3.0	3.0	4.7	3.0	3.0
All-Red Time (s)	1.6	3.9	3.3	1.9	3.9	3.3
Lost Time Adjust (s)	-1.0	-1.9	-1.3	-1.6	-1.9	-1.9
Total Lost Time (s)	5.0	5.0	5.0	5.0	5.0	4.4
Lead/Lag	Lead		Lag			Lag
Lead-Lag Optimize?	Yes		Yes			Yes
Vehicle Extension (s)	6.0	5.0	2.5	6.0	5.0	2.5
Minimum Gap (s)	3.0	0.2	0.2	3.0	0.2	0.2
Time Before Reduce (s)	15.0	0.0	0.0	15.0	0.0	0.0
Time To Reduce (s)	30.0	0.0	0.0	30.0	0.0	0.0
Recall Mode	C-Max	None	None	C-Max	None	None
Act Effct Green (s)	52.4	76.0	34.0	91.4	18.6	58.2
Actuated g/C Ratio	0.44	0.63	0.28	0.76	0.16	0.48
v/c Ratio	0.73	0.18	0.64	0.39	0.67	0.11
Control Delay	27.9	8.6	25.5	4.0	55.1	10.3
Queue Delay	0.3	0.0	0.0	0.0	0.0	0.0
Total Delay	28.2	8.6	25.5	4.0	55.1	10.3
LOS	C	A	C	A	E	B
Approach Delay	25.7			8.9	46.5	
Approach LOS	C			A	D	
Queue Length 50th (ft)	382	44	203	79	130	18
Queue Length 95th (ft)	465	72	302	89	181	47
Internal Link Dist (ft)	478			1124	243	
Turn Bay Length (ft)		225	200			
Base Capacity (vph)	1496	910	459	2608	522	757
Starvation Cap Reductn	87	0	0	0	0	0
Spillback Cap Reductn	0	0	0	0	0	0
Storage Cap Reductn	0	0	0	0	0	0
Reduced v/c Ratio	0.78	0.18	0.64	0.39	0.66	0.11

Intersection Summary			
Area Type:	Other		
Cycle Length: 120			
Actuated Cycle Length: 120			
Offset: 4 (3%), Referenced to phase 2:EBT and 6:WBT, Start of Green			
Natural Cycle: 60			
Control Type: Actuated-Coordinated			
Maximum v/c Ratio: 0.73			
Intersection Signal Delay: 21.3		Intersection LOS: C	
Intersection Capacity Utilization 63.3%		ICU Level of Service B	

DocuSign Envelope ID: 5C03745C-4B01-4834-A65D-B77F558A4F46

Analysis Period (min) 15

Splits and Phases: 2: I-26 SEB Ramps & NC 191 (Brevard Rd)

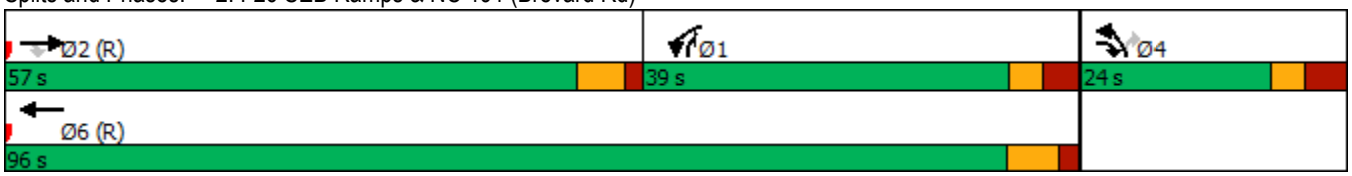

DocuSign Envelope ID: 5C03745C-4B01-4834-A65D-B77F558A4F46

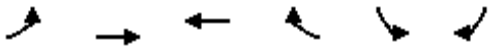

Lane Group	EBL	EBT	WBT	WBR	SBL	SBR
Lane Configurations						
Traffic Volume (vph)	214	847	979	47	373	194
Future Volume (vph)	214	847	979	47	373	194
Ideal Flow (vphpl)	1900	1900	1900	1900	1900	1900
Grade (%)		2%	-2%		2%	
Storage Length (ft)	625			200	0	400
Storage Lanes	2			1	2	1
Taper Length (ft)	25				25	
Lane Util. Factor	0.97	0.95	0.95	1.00	0.97	1.00
Frt				0.850		0.850
Flt Protected	0.950				0.950	
Satd. Flow (prot)	3095	3340	3408	1456	3240	1494
Flt Permitted	0.950				0.950	
Satd. Flow (perm)	3095	3340	3408	1456	3240	1494
Right Turn on Red				No		No
Satd. Flow (RTOR)						
Link Speed (mph)		45	45		45	
Link Distance (ft)		802	1565		860	
Travel Time (s)		12.2	23.7		13.0	
Peak Hour Factor	0.90	0.90	0.90	0.90	0.90	0.90
Heavy Vehicles (%)	12%	7%	7%	12%	7%	7%
Adj. Flow (vph)	238	941	1088	52	414	216
Shared Lane Traffic (%)						
Lane Group Flow (vph)	238	941	1088	52	414	216
Enter Blocked Intersection	No	No	No	No	No	No
Lane Alignment	Left	Left	Left	Right	Left	Right
Median Width(ft)		24	12		36	
Link Offset(ft)		0	0		0	
Crosswalk Width(ft)		16	16		16	
Two way Left Turn Lane						
Headway Factor	1.01	1.01	0.99	0.99	1.01	1.01
Turning Speed (mph)	15			9	15	9
Number of Detectors	1	2	2	1	1	1
Detector Template	Left	Thru	Thru	Right	Left	Right
Leading Detector (ft)	20	100	100	20	20	20
Trailing Detector (ft)	0	0	0	0	0	0
Detector 1 Position(ft)	0	0	0	0	0	0
Detector 1 Size(ft)	20	6	6	20	20	20
Detector 1 Type	Cl+Ex	Cl+Ex	Cl+Ex	Cl+Ex	Cl+Ex	Cl+Ex
Detector 1 Channel						
Detector 1 Extend (s)	0.0	0.0	0.0	0.0	0.0	0.0
Detector 1 Queue (s)	0.0	0.0	0.0	0.0	0.0	0.0
Detector 1 Delay (s)	0.0	0.0	0.0	0.0	0.0	0.0
Detector 2 Position(ft)		94	94			
Detector 2 Size(ft)		6	6			
Detector 2 Type		Cl+Ex	Cl+Ex			
Detector 2 Channel						
Detector 2 Extend (s)		0.0	0.0			
Turn Type	Prot	NA	NA	pm+ov	Prot	pm+ov

DocuSign Envelope ID: 5C03745C-4B01-4834-A65D-B77F558A4F46

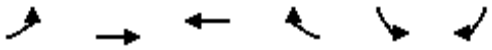

Lane Group	EBL	EBT	WBT	WBR	SBL	SBR
Protected Phases	5	2	6	4	4	5
Permitted Phases				6		4
Detector Phase	5	2	6	4	4	5
Switch Phase						
Minimum Initial (s)	7.0	12.0	12.0	7.0	7.0	7.0
Minimum Split (s)	14.0	19.0	25.0	25.0	25.0	14.0
Total Split (s)	23.0	89.0	66.0	31.0	31.0	23.0
Total Split (%)	19.2%	74.2%	55.0%	25.8%	25.8%	19.2%
Maximum Green (s)	16.0	82.0	59.0	24.0	24.0	16.0
Yellow Time (s)	5.0	5.0	5.0	5.0	5.0	5.0
All-Red Time (s)	2.0	2.0	2.0	2.0	2.0	2.0
Lost Time Adjust (s)	-2.0	-2.0	-2.0	-2.0	-2.0	-2.0
Total Lost Time (s)	5.0	5.0	5.0	5.0	5.0	5.0
Lead/Lag	Lag		Lead			Lag
Lead-Lag Optimize?	Yes		Yes			Yes
Vehicle Extension (s)	3.0	3.0	3.0	3.0	3.0	3.0
Minimum Gap (s)	0.2	3.0	3.0	0.2	0.2	0.2
Time Before Reduce (s)	0.0	15.0	15.0	0.0	0.0	0.0
Time To Reduce (s)	0.0	30.0	30.0	0.0	0.0	0.0
Recall Mode	None	C-Max	C-Max	None	None	None
Walk Time (s)			7.0	7.0	7.0	
Flash Dont Walk (s)			11.0	11.0	11.0	
Pedestrian Calls (#/hr)			0	0	0	
Act Effct Green (s)	18.0	87.8	64.8	92.0	22.2	45.2
Actuated g/C Ratio	0.15	0.73	0.54	0.77	0.18	0.38
v/c Ratio	0.51	0.39	0.59	0.05	0.69	0.38
Control Delay	21.2	1.4	20.8	3.5	51.9	29.0
Queue Delay	0.0	0.0	0.0	0.0	0.0	0.0
Total Delay	21.2	1.4	20.8	3.5	51.9	29.0
LOS	C	A	C	A	D	C
Approach Delay		5.4	20.0		44.0	
Approach LOS		A	B		D	
Queue Length 50th (ft)	90	18	289	8	155	120
Queue Length 95th (ft)	m113	27	381	17	202	179
Internal Link Dist (ft)		722	1485		780	
Turn Bay Length (ft)	625			200		400
Base Capacity (vph)	464	2444	1841	1104	702	562
Starvation Cap Reductn	0	0	0	0	0	0
Spillback Cap Reductn	0	0	0	0	0	0
Storage Cap Reductn	0	0	0	0	0	0
Reduced v/c Ratio	0.51	0.39	0.59	0.05	0.59	0.38

Intersection Summary	
Area Type:	Other
Cycle Length: 120	
Actuated Cycle Length: 120	
Offset: 2 (2%), Referenced to phase 2:EBT and 6:WBT, Start of Green	
Natural Cycle: 65	
Control Type: Actuated-Coordinated	

DocuSign Envelope ID: 5C03745C-4B01-4834-A65D-B77F558A4F46

Maximum v/c Ratio: 0.69	
Intersection Signal Delay: 19.3	Intersection LOS: B
Intersection Capacity Utilization 56.3%	ICU Level of Service B
Analysis Period (min) 15	

m Volume for 95th percentile queue is metered by upstream signal.

Splits and Phases: 3: NC 191 (Brevard Rd) & I-26 NWB Ramps

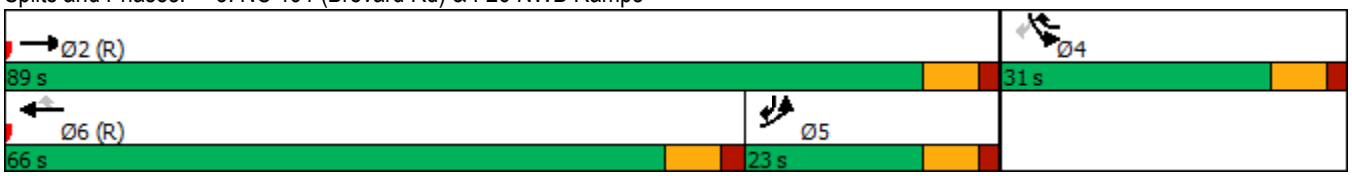

DocuSign Envelope ID: 5C03745C-4B01-4834-A65D-B77F558A4F46

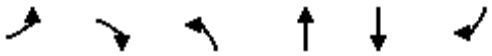

Lane Group	EBL	EBR	NBL	NBT	SBT	SBR
Lane Configurations						
Traffic Volume (vph)	56	19	22	127	159	83
Future Volume (vph)	56	19	22	127	159	83
Ideal Flow (vphpl)	1900	1900	1900	1900	1900	1900
Grade (%)	0%			0%	3%	
Storage Length (ft)	75	0	275			0
Storage Lanes	1	1	1			0
Taper Length (ft)	25		25			
Lane Util. Factor	1.00	1.00	1.00	1.00	1.00	1.00
Ped Bike Factor						
Frt		0.850			0.954	
Flt Protected	0.950		0.950			
Satd. Flow (prot)	1770	1583	1770	1863	1750	0
Flt Permitted	0.950		0.950			
Satd. Flow (perm)	1770	1583	1770	1863	1750	0
Link Speed (mph)	20			35	35	
Link Distance (ft)	1081			1059	248	
Travel Time (s)	36.9			20.6	4.8	
Confl. Bikes (#/hr)						159
Peak Hour Factor	0.90	0.90	0.90	0.90	0.90	0.90
Adj. Flow (vph)	62	21	24	141	177	92
Shared Lane Traffic (%)						
Lane Group Flow (vph)	62	21	24	141	269	0
Enter Blocked Intersection	No	No	No	No	No	No
Lane Alignment	Left	Right	Left	Left	Left	Right
Median Width(ft)	12			12	0	
Link Offset(ft)	0			0	0	
Crosswalk Width(ft)	16			16	16	
Two way Left Turn Lane						
Headway Factor	1.00	1.00	1.00	1.00	1.02	1.02
Turning Speed (mph)	15	9	15			9
Sign Control	Stop			Free	Free	

Intersection Summary			
Area Type:	Other		
Control Type: Unsignalized			
Intersection Capacity Utilization 28.3%		ICU Level of Service A	
Analysis Period (min) 15			

DocuSign Envelope ID: 5C03745C-4B01-4834-A65D-B77F558A4F46

Lane Group	EBL	EBT	EBR	WBL	WBT	WBR	NBL	NBT	NBR	SBL	SBT	SBR
Lane Configurations												
Traffic Volume (vph)	38	111	34	81	121	252	62	671	133	356	575	59
Future Volume (vph)	38	111	34	81	121	252	62	671	133	356	575	59
Ideal Flow (vphpl)	1900	1900	1900	1900	1900	1900	1900	1900	1900	1900	1900	1900
Grade (%)		3%			0%			2%			-7%	
Storage Length (ft)	0		0	200		0	175		150	200		0
Storage Lanes	1		0	1		1	1		1	2		0
Taper Length (ft)	25			25			25			25		
Lane Util. Factor	1.00	0.95	0.95	1.00	1.00	1.00	1.00	0.95	1.00	0.97	0.95	0.95
Frt		0.965				0.850			0.850		0.986	
Flt Protected	0.950			0.950			0.950			0.950		
Satd. Flow (prot)	1743	3364	0	1719	1810	1538	1686	3372	1508	3452	3509	0
Flt Permitted	0.950			0.950			0.950			0.950		
Satd. Flow (perm)	1743	3364	0	1719	1810	1538	1686	3372	1508	3452	3509	0
Right Turn on Red			No			No			No			No
Satd. Flow (RTOR)												
Link Speed (mph)		35			35			45			45	
Link Distance (ft)		248			1200			1589			1600	
Travel Time (s)		4.8			23.4			24.1			24.2	
Peak Hour Factor	0.90	0.90	0.90	0.90	0.90	0.90	0.90	0.90	0.90	0.90	0.90	0.90
Heavy Vehicles (%)	2%	2%	2%	5%	5%	5%	6%	6%	6%	5%	5%	5%
Adj. Flow (vph)	42	123	38	90	134	280	69	746	148	396	639	66
Shared Lane Traffic (%)												
Lane Group Flow (vph)	42	161	0	90	134	280	69	746	148	396	705	0
Enter Blocked Intersection	No	No	No	No	No	No	No	No	No	No	No	No
Lane Alignment	L NA	Left	Right	Left	Left	Left	Left	L NA	Right	Left	Left	Right
Median Width(ft)		12			12			24			24	
Link Offset(ft)		0			0			0			0	
Crosswalk Width(ft)		16			16			16			16	
Two way Left Turn Lane												
Headway Factor	1.02	1.02	1.02	1.00	1.00	1.00	1.01	1.01	1.01	0.96	0.96	0.96
Turning Speed (mph)	15		9	15		9	15		9	15		9
Number of Detectors	1	2		1	2	1	1	2	1	1	2	
Detector Template	Left	Thru		Left	Thru	Right	Left	Thru	Right	Left	Thru	
Leading Detector (ft)	20	100		20	100	20	20	100	20	20	100	
Trailing Detector (ft)	0	0		0	0	0	0	0	0	0	0	
Detector 1 Position(ft)	0	0		0	0	0	0	0	0	0	0	
Detector 1 Size(ft)	20	6		20	6	20	20	6	20	20	6	
Detector 1 Type	Cl+Ex	Cl+Ex		Cl+Ex	Cl+Ex	Cl+Ex	Cl+Ex	Cl+Ex	Cl+Ex	Cl+Ex	Cl+Ex	
Detector 1 Channel												
Detector 1 Extend (s)	0.0	0.0		0.0	0.0	0.0	0.0	0.0	0.0	0.0	0.0	
Detector 1 Queue (s)	0.0	0.0		0.0	0.0	0.0	0.0	0.0	0.0	0.0	0.0	
Detector 1 Delay (s)	0.0	0.0		0.0	0.0	0.0	0.0	0.0	0.0	0.0	0.0	
Detector 2 Position(ft)		94			94			94			94	
Detector 2 Size(ft)		6			6			6			6	
Detector 2 Type		Cl+Ex			Cl+Ex			Cl+Ex			Cl+Ex	
Detector 2 Channel												
Detector 2 Extend (s)		0.0			0.0			0.0			0.0	
Turn Type	Prot	NA		Prot	NA	pm+ov	Prot	NA	pm+ov	Prot	NA	

DocuSign Envelope ID: 5C03745C-4B01-4834-A65D-B77F558A4F46

Lane Group	EBL	EBT	EBR	WBL	WBT	WBR	NBL	NBT	NBR	SBL	SBT	SBR
Protected Phases	7	4		3	8	1	5	2	3	1	6	
Permitted Phases						8			2			
Detector Phase	7	4		3	8	1	5	2	3	1	6	
Switch Phase												
Minimum Initial (s)	7.0	7.0		7.0	7.0	7.0	7.0	12.0	7.0	7.0	12.0	
Minimum Split (s)	14.0	14.0		14.0	14.0	14.0	14.0	19.0	14.0	14.0	19.0	
Total Split (s)	16.0	20.0		20.0	24.0	29.0	17.0	51.0	20.0	29.0	63.0	
Total Split (%)	13.3%	16.7%		16.7%	20.0%	24.2%	14.2%	42.5%	16.7%	24.2%	52.5%	
Maximum Green (s)	9.0	13.0		13.0	17.0	22.0	10.0	44.0	13.0	22.0	56.0	
Yellow Time (s)	5.0	5.0		5.0	5.0	5.0	5.0	5.0	5.0	5.0	5.0	
All-Red Time (s)	2.0	2.0		2.0	2.0	2.0	2.0	2.0	2.0	2.0	2.0	
Lost Time Adjust (s)	-2.0	-2.0		-2.0	-2.0	-2.0	-2.0	-2.0	-2.0	-2.0	-2.0	
Total Lost Time (s)	5.0	5.0		5.0	5.0	5.0	5.0	5.0	5.0	5.0	5.0	
Lead/Lag	Lead	Lag		Lead	Lag	Lead	Lead	Lag	Lead	Lead	Lag	
Lead-Lag Optimize?	Yes	Yes		Yes	Yes	Yes	Yes	Yes	Yes	Yes	Yes	
Vehicle Extension (s)	3.0	3.0		3.0	3.0	3.0	3.0	3.0	3.0	3.0	3.0	
Minimum Gap (s)	3.0	3.0		3.0	3.0	3.0	3.0	3.0	3.0	3.0	3.0	
Time Before Reduce (s)	0.0	0.0		0.0	0.0	0.0	0.0	15.0	0.0	0.0	15.0	
Time To Reduce (s)	0.0	0.0		0.0	0.0	0.0	0.0	30.0	0.0	0.0	30.0	
Recall Mode	None	None		None	None	None	None	Min	None	None	Min	
Act Effct Green (s)	10.1	12.0		12.3	21.0	44.4	10.9	29.4	46.8	18.3	40.4	
Actuated g/C Ratio	0.11	0.13		0.13	0.23	0.48	0.12	0.32	0.51	0.20	0.44	
v/c Ratio	0.22	0.37		0.39	0.33	0.38	0.35	0.70	0.19	0.58	0.46	
Control Delay	46.4	42.4		46.3	38.9	20.6	47.9	32.1	13.9	38.9	20.8	
Queue Delay	0.0	0.0		0.0	0.0	0.0	0.0	0.0	0.0	0.0	0.0	
Total Delay	46.4	42.4		46.3	38.9	20.6	47.9	32.1	13.9	38.9	20.8	
LOS	D	D		D	D	C	D	C	B	D	C	
Approach Delay		43.2			30.1			30.4			27.3	
Approach LOS		D			C			C			C	
Queue Length 50th (ft)	23	45		48	71	113	37	196	44	107	160	
Queue Length 95th (ft)	66	92		114	154	221	95	304	92	186	231	
Internal Link Dist (ft)		168			1120			1509			1520	
Turn Bay Length (ft)				200			175		150	200		
Base Capacity (vph)	213	561		286	434	845	225	1725	814	922	2264	
Starvation Cap Reductn	0	0		0	0	0	0	0	0	0	0	
Spillback Cap Reductn	0	0		0	0	0	0	0	0	0	0	
Storage Cap Reductn	0	0		0	0	0	0	0	0	0	0	
Reduced v/c Ratio	0.20	0.29		0.31	0.31	0.33	0.31	0.43	0.18	0.43	0.31	

Intersection Summary			
Area Type:	Other		
Cycle Length: 120			
Actuated Cycle Length: 92.5			
Natural Cycle: 65			
Control Type: Actuated-Uncoordinated			
Maximum v/c Ratio: 0.70			
Intersection Signal Delay: 30.1		Intersection LOS: C	
Intersection Capacity Utilization 57.6%		ICU Level of Service B	
Analysis Period (min) 15			

DocuSign Envelope ID: 5C03745C-4B01-4834-A65D-B77F558A4F46

Splits and Phases: 5: NC 191 (Brevard Rd) & Blue Ridge Pkwy Access/NC 191 Connector

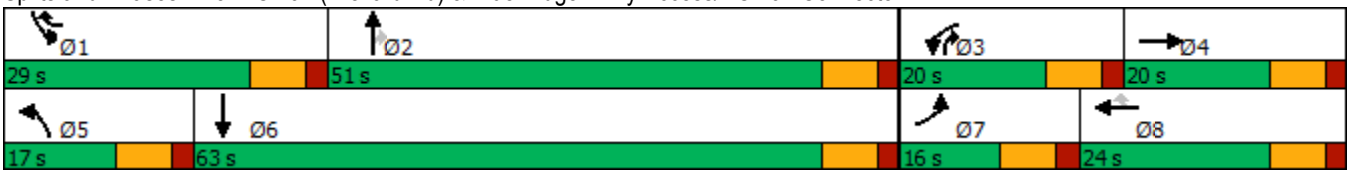

DocuSign Envelope ID: 5C03745C-4B01-4834-A65D-B77F558A4F46

Lane Group	EBL	EBT	EBR	WBL	WBT	WBR	NBL	NBT	NBR	SBL	SBT	SBR
Lane Configurations												
Traffic Volume (vph)	0	331	302	1	417	0	0	0	0	0	1	506
Future Volume (vph)	0	331	302	1	417	0	0	0	0	0	1	506
Ideal Flow (vphpl)	1900	1900	1900	1900	1900	1900	1900	1900	1900	1900	1900	1900
Storage Length (ft)	0		200	0		0	0		0	0		325
Storage Lanes	0		1	0		0	0		0	0		1
Taper Length (ft)	25			25			25			25		
Lane Util. Factor	1.00	1.00	1.00	1.00	1.00	1.00	1.00	1.00	1.00	1.00	1.00	1.00
Frt			0.850									0.850
Flt Protected												
Satd. Flow (prot)	0	1810	1442	0	1809	0	0	0	0	0	1696	1538
Flt Permitted												
Satd. Flow (perm)	0	1810	1442	0	1809	0	0	0	0	0	1696	1538
Link Speed (mph)		35			35			45			45	
Link Distance (ft)		362			276			839			1024	
Travel Time (s)		7.1			5.4			12.7			15.5	
Peak Hour Factor	0.90	0.90	0.90	0.90	0.90	0.90	0.90	0.90	0.90	0.90	0.90	0.90
Heavy Vehicles (%)	2%	5%	12%	12%	5%	2%	2%	2%	2%	2%	12%	5%
Adj. Flow (vph)	0	368	336	1	463	0	0	0	0	0	1	562
Shared Lane Traffic (%)												
Lane Group Flow (vph)	0	368	336	0	464	0	0	0	0	0	1	562
Enter Blocked Intersection	No	No	No	No	No	No	No	No	No	No	No	No
Lane Alignment	Left	Left	Right	Left	L NA	Right	Left	Left	Right	Left	Left	R NA
Median Width(ft)		12			0			0			0	
Link Offset(ft)		0			0			0			0	
Crosswalk Width(ft)		16			16			16			16	
Two way Left Turn Lane												
Headway Factor	1.00	1.00	1.00	1.00	1.00	1.00	1.00	1.00	1.00	1.00	1.00	1.00
Turning Speed (mph)	15		9	15		9	15		9	15		9
Sign Control		Free			Free			Stop			Stop	

Intersection Summary			
Area Type:	Other		
Control Type: Unsignalized			
Intersection Capacity Utilization	60.0%	ICU Level of Service	B
Analysis Period (min)	15		

DocuSign Envelope ID: 5C03745C-4B01-4834-A65D-B77F558A4F46

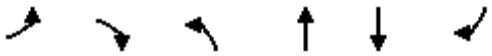

Lane Group	EBL	EBR	NBL	NBT	SBT	SBR
Lane Configurations						
Traffic Volume (vph)	331	0	417	1	0	0
Future Volume (vph)	331	0	417	1	0	0
Ideal Flow (vphpl)	1900	1900	1900	1900	1900	1900
Lane Util. Factor	1.00	1.00	1.00	1.00	1.00	1.00
Frt						
Flt Protected	0.950			0.952		
Satd. Flow (prot)	1612	0	0	1722	0	0
Flt Permitted	0.950			0.952		
Satd. Flow (perm)	1612	0	0	1722	0	0
Right Turn on Red		No				No
Satd. Flow (RTOR)						
Link Speed (mph)	35			45	45	
Link Distance (ft)	276			994	576	
Travel Time (s)	5.4			15.1	8.7	
Peak Hour Factor	0.90	0.90	0.90	0.90	0.90	0.90
Heavy Vehicles (%)	12%	2%	5%	12%	2%	2%
Adj. Flow (vph)	368	0	463	1	0	0
Shared Lane Traffic (%)						
Lane Group Flow (vph)	368	0	0	464	0	0
Enter Blocked Intersection	No	No	No	No	No	No
Lane Alignment	Left	Right	Left	Left	Left	Right
Median Width(ft)	12			0	0	
Link Offset(ft)	0			0	0	
Crosswalk Width(ft)	16			16	16	
Two way Left Turn Lane						
Headway Factor	1.00	1.00	1.00	1.00	1.00	1.00
Turning Speed (mph)	15	9	15			9
Number of Detectors	1		1	2		
Detector Template	Left		Left	Thru		
Leading Detector (ft)	20		20	100		
Trailing Detector (ft)	0		0	0		
Detector 1 Position(ft)	0		0	0		
Detector 1 Size(ft)	20		20	6		
Detector 1 Type	Cl+Ex		Cl+Ex	Cl+Ex		
Detector 1 Channel						
Detector 1 Extend (s)	0.0		0.0	0.0		
Detector 1 Queue (s)	0.0		0.0	0.0		
Detector 1 Delay (s)	0.0		0.0	0.0		
Detector 2 Position(ft)				94		
Detector 2 Size(ft)				6		
Detector 2 Type				Cl+Ex		
Detector 2 Channel						
Detector 2 Extend (s)				0.0		
Turn Type	Prot		Split	NA		
Protected Phases	2		4	4		
Permitted Phases						
Detector Phase	2		4	4		
Switch Phase						

DocuSign Envelope ID: 5C03745C-4B01-4834-A65D-B77F558A4F46

Lane Group	EBL	EBR	NBL	NBT	SBT	SBR
Minimum Initial (s)	10.0		7.0	7.0		
Minimum Split (s)	17.0		14.0	14.0		
Total Split (s)	29.0		31.0	31.0		
Total Split (%)	48.3%		51.7%	51.7%		
Maximum Green (s)	22.0		24.0	24.0		
Yellow Time (s)	5.0		5.0	5.0		
All-Red Time (s)	2.0		2.0	2.0		
Lost Time Adjust (s)	-2.0			-2.0		
Total Lost Time (s)	5.0			5.0		
Lead/Lag						
Lead-Lag Optimize?						
Vehicle Extension (s)	3.0		3.0	3.0		
Recall Mode	Min		None	None		
Act Effct Green (s)	18.2			19.7		
Actuated g/C Ratio	0.38			0.41		
v/c Ratio	0.61			0.66		
Control Delay	18.1			17.5		
Queue Delay	0.0			0.0		
Total Delay	18.1			17.5		
LOS	B			B		
Approach Delay	18.1			17.5		
Approach LOS	B			B		
Queue Length 50th (ft)	79			98		
Queue Length 95th (ft)	174			211		
Internal Link Dist (ft)	196			914	496	
Turn Bay Length (ft)						
Base Capacity (vph)	838			970		
Starvation Cap Reductn	0			0		
Spillback Cap Reductn	0			0		
Storage Cap Reductn	0			0		
Reduced v/c Ratio	0.44			0.48		

Intersection Summary			
Area Type:	Other		
Cycle Length: 60			
Actuated Cycle Length: 48.4			
Natural Cycle: 45			
Control Type: Actuated-Uncoordinated			
Maximum v/c Ratio: 0.66			
Intersection Signal Delay: 17.8		Intersection LOS: B	
Intersection Capacity Utilization 49.8%		ICU Level of Service A	
Analysis Period (min) 15			

Splits and Phases: 7: HE-0001 NWB Ramp & NC 191 Connector

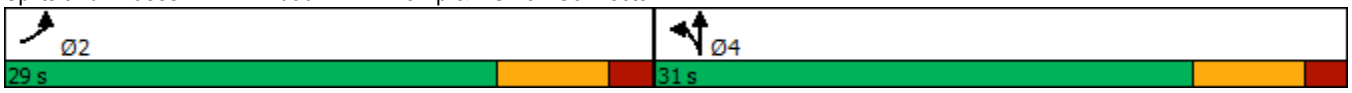

DocuSign Envelope ID: 5C03745C-4B01-4834-A65D-B77F558A4F46

Lane Group	EBL	EBT	WBU	WBT	WBR	SBL	SBR
Lane Configurations							
Traffic Volume (vph)	42	673	0	697	315	402	56
Future Volume (vph)	42	673	0	697	315	402	56
Ideal Flow (vphpl)	1900	1900	1900	1900	1900	1900	1900
Grade (%)		-9%		5%		-9%	
Storage Length (ft)	500		350		0	0	400
Storage Lanes	1		1		1	2	1
Taper Length (ft)	25		25			25	
Lane Util. Factor	1.00	1.00	1.00	1.00	1.00	0.97	1.00
Frt					0.850		0.850
Flt Protected	0.950					0.950	
Satd. Flow (prot)	1715	1805	1715	1715	1458	3485	1607
Flt Permitted	0.950					0.950	
Satd. Flow (perm)	1715	1805	1715	1715	1458	3485	1607
Right Turn on Red					No		No
Satd. Flow (RTOR)							
Link Speed (mph)		35		35		45	
Link Distance (ft)		1579		1808		1089	
Travel Time (s)		30.8		35.2		16.5	
Peak Hour Factor	0.90	0.90	0.90	0.90	0.90	0.90	0.90
Heavy Vehicles (%)	10%	10%	8%	8%	8%	5%	5%
Adj. Flow (vph)	47	748	0	774	350	447	62
Shared Lane Traffic (%)							
Lane Group Flow (vph)	47	748	0	774	350	447	62
Enter Blocked Intersection	No	No	No	No	No	No	No
Lane Alignment	Left	Left	R NA	Left	Right	Left	Right
Median Width(ft)		12		12		24	
Link Offset(ft)		0		0		0	
Crosswalk Width(ft)		16		16		16	
Two way Left Turn Lane							
Headway Factor	0.94	0.94	1.03	1.03	1.03	0.94	0.94
Turning Speed (mph)	15		9		9	15	9
Number of Detectors	1	2	1	2	1	1	1
Detector Template	Left	Thru	Left	Thru	Right	Left	Right
Leading Detector (ft)	20	100	20	100	20	20	20
Trailing Detector (ft)	0	0	0	0	0	0	0
Detector 1 Position(ft)	0	0	0	0	0	0	0
Detector 1 Size(ft)	20	6	20	6	20	20	20
Detector 1 Type	Cl+Ex	Cl+Ex	Cl+Ex	Cl+Ex	Cl+Ex	Cl+Ex	Cl+Ex
Detector 1 Channel							
Detector 1 Extend (s)	0.0	0.0	0.0	0.0	0.0	0.0	0.0
Detector 1 Queue (s)	0.0	0.0	0.0	0.0	0.0	0.0	0.0
Detector 1 Delay (s)	0.0	0.0	0.0	0.0	0.0	0.0	0.0
Detector 2 Position(ft)		94		94			
Detector 2 Size(ft)		6		6			
Detector 2 Type		Cl+Ex		Cl+Ex			
Detector 2 Channel							
Detector 2 Extend (s)		0.0		0.0			
Turn Type	Prot	NA	Prot	NA	pm+ov	Prot	pm+ov

DocuSign Envelope ID: 5C03745C-4B01-4834-A65D-B77F558A4F46

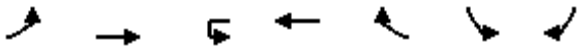

Lane Group	EBL	EBT	WBU	WBT	WBR	SBL	SBR
Protected Phases	5	2	1	6	4	4	5
Permitted Phases					6		4
Detector Phase	5	2	1	6	4	4	5
Switch Phase							
Minimum Initial (s)	7.0	10.0	7.0	10.0	7.0	7.0	7.0
Minimum Split (s)	13.7	17.3	13.3	17.3	13.8	13.8	13.7
Total Split (s)	17.0	125.0	14.0	122.0	41.0	41.0	17.0
Total Split (%)	9.4%	69.4%	7.8%	67.8%	22.8%	22.8%	9.4%
Maximum Green (s)	10.3	117.7	7.7	114.7	34.2	34.2	10.3
Yellow Time (s)	3.3	4.6	3.0	4.6	3.3	3.3	3.3
All-Red Time (s)	3.4	2.7	3.3	2.7	3.5	3.5	3.4
Lost Time Adjust (s)	-1.7	-2.3	-1.3	-2.3	-2.3	-1.8	-1.8
Total Lost Time (s)	5.0	5.0	5.0	5.0	4.5	5.0	4.9
Lead/Lag	Lead	Lag	Lead	Lag			Lead
Lead-Lag Optimize?	Yes	Yes	Yes	Yes			Yes
Vehicle Extension (s)	2.0	3.0	2.0	3.0	3.0	3.0	2.0
Recall Mode	None	C-Max	None	C-Max	None	None	None
Act Effct Green (s)	10.8	139.6		123.9	159.7	30.4	46.2
Actuated g/C Ratio	0.06	0.78		0.69	0.89	0.17	0.26
v/c Ratio	0.46	0.53		0.66	0.27	0.76	0.15
Control Delay	96.0	9.9		11.1	3.3	79.9	50.9
Queue Delay	0.0	0.0		0.0	0.0	0.0	0.0
Total Delay	96.0	9.9		11.1	3.3	79.9	50.9
LOS	F	A		B	A	E	D
Approach Delay		15.0		8.7		76.4	
Approach LOS		B		A		E	
Queue Length 50th (ft)	55	310		293	87	262	57
Queue Length 95th (ft)	103	451		560	118	317	97
Internal Link Dist (ft)		1499		1728		1009	
Turn Bay Length (ft)	500						400
Base Capacity (vph)	115	1400		1180	1339	697	425
Starvation Cap Reductn	0	0		0	0	0	0
Spillback Cap Reductn	0	0		0	0	0	0
Storage Cap Reductn	0	0		0	0	0	0
Reduced v/c Ratio	0.41	0.53		0.66	0.26	0.64	0.15

Intersection Summary			
Area Type:	Other		
Cycle Length: 180			
Actuated Cycle Length: 180			
Offset: 24 (13%), Referenced to phase 2:EBT and 6:WBT, Start of Green			
Natural Cycle: 75			
Control Type: Actuated-Coordinated			
Maximum v/c Ratio: 0.76			
Intersection Signal Delay: 24.9		Intersection LOS: C	
Intersection Capacity Utilization 56.5%		ICU Level of Service B	
Analysis Period (min) 15			

DocuSign Envelope ID: 5C03745C-4B01-4834-A65D-B77F558A4F46

Splits and Phases: 8: NC 146 (Long Shoals Rd) & Clayton Rd

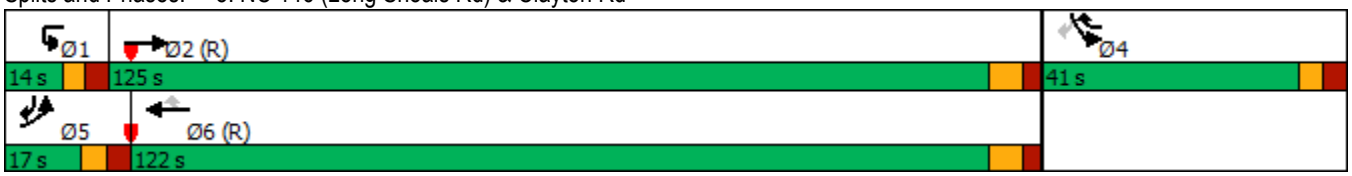

DocuSign Envelope ID: 5C03745C-4B01-4834-A65D-B77F558A4F46

Lane Group	EBU	EBT	EBR	WBL	WBT	NBL	NBR
Lane Configurations							
Traffic Volume (vph)	0	981	23	216	1029	47	481
Future Volume (vph)	0	981	23	216	1029	47	481
Ideal Flow (vphpl)	1900	1900	1900	1900	1900	1900	1900
Storage Length (ft)	325		0	325		200	0
Storage Lanes	1		0	1		1	1
Taper Length (ft)	25			25		25	
Lane Util. Factor	1.00	0.95	0.95	1.00	0.95	1.00	1.00
Frt		0.997					0.850
Flt Protected				0.950		0.950	
Satd. Flow (prot)	1759	3333	0	1671	3343	1752	1568
Flt Permitted				0.950		0.950	
Satd. Flow (perm)	1759	3333	0	1671	3343	1752	1568
Link Speed (mph)		45			45	35	
Link Distance (ft)		1808			1000	1062	
Travel Time (s)		27.4			15.2	20.7	
Peak Hour Factor	0.90	0.90	0.90	0.90	0.90	0.90	0.90
Heavy Vehicles (%)	8%	8%	8%	8%	8%	3%	3%
Adj. Flow (vph)	0	1090	26	240	1143	52	534
Shared Lane Traffic (%)							
Lane Group Flow (vph)	0	1116	0	240	1143	52	534
Enter Blocked Intersection	No	No	No	No	No	No	No
Lane Alignment	Left	Left	Right	Left	Left	Left	Right
Median Width(ft)		15			24	12	
Link Offset(ft)		0			0	0	
Crosswalk Width(ft)		16			16	16	
Two way Left Turn Lane							
Headway Factor	1.00	1.00	1.00	1.00	1.00	1.00	1.00
Turning Speed (mph)	9		9	15		15	9
Sign Control		Free			Free	Stop	

Intersection Summary			
Area Type:	Other		
Control Type: Unsignalized			
Intersection Capacity Utilization 64.3%		ICU Level of Service C	
Analysis Period (min) 15			

DocuSign Envelope ID: 5C03745C-4B01-4834-A65D-B77F558A4F46

Lane Group	EBL	EBT	EBR2	WBL	WBT	SEL	SER2	NWL
Lane Configurations								
Traffic Volume (vph)	230	1046	186	398	707	1194	288	250
Future Volume (vph)	230	1046	186	398	707	1194	288	250
Ideal Flow (vphpl)	1900	1900	1900	1900	1900	1900	1900	1900
Grade (%)		3%			-7%			
Storage Length (ft)	475			0		0		0
Storage Lanes	2			2		2		2
Taper Length (ft)	25			25		25		25
Lane Util. Factor	0.97	0.95	1.00	0.97	0.95	0.97	1.00	0.97
Frt			0.850				0.850	
Flt Protected	0.950			0.950		0.950		0.950
Satd. Flow (prot)	3080	3292	1420	3236	3593	3434	1525	3291
Flt Permitted	0.950			0.950		0.950		0.950
Satd. Flow (perm)	3080	3292	1420	3236	3593	3434	1525	3291
Right Turn on Red			Yes				Yes	
Satd. Flow (RTOR)			190				190	
Link Speed (mph)		45			45			
Link Distance (ft)		1000			418			
Travel Time (s)		15.2			6.3			
Peak Hour Factor	0.90	0.90	0.90	0.90	0.90	0.90	0.90	0.90
Heavy Vehicles (%)	12%	8%	12%	12%	4%	4%	8%	8%
Adj. Flow (vph)	256	1162	207	442	786	1327	320	278
Shared Lane Traffic (%)								
Lane Group Flow (vph)	256	1162	207	442	786	1327	320	278
Enter Blocked Intersection	No	No	No	No	No	No	No	No
Lane Alignment	Left	Left	Right	Left	Left	Left	Right	Left
Median Width(ft)		24			24			
Link Offset(ft)		0			0			
Crosswalk Width(ft)		16			16			
Two way Left Turn Lane								
Headway Factor	1.02	1.02	1.02	0.96	0.96	0.97	0.97	0.98
Turning Speed (mph)	15		9	15		15	9	15
Number of Detectors	1	2	1	1	2	1	1	1
Detector Template	Left	Thru	Right	Left	Thru	Left	Right	Left
Leading Detector (ft)	20	100	20	20	100	20	20	20
Trailing Detector (ft)	0	0	0	0	0	0	0	0
Detector 1 Position(ft)	0	0	0	0	0	0	0	0
Detector 1 Size(ft)	20	6	20	20	6	20	20	20
Detector 1 Type	Cl+Ex	Cl+Ex	Cl+Ex	Cl+Ex	Cl+Ex	Cl+Ex	Cl+Ex	Cl+Ex
Detector 1 Channel								
Detector 1 Extend (s)	0.0	0.0	0.0	0.0	0.0	0.0	0.0	0.0
Detector 1 Queue (s)	0.0	0.0	0.0	0.0	0.0	0.0	0.0	0.0
Detector 1 Delay (s)	0.0	0.0	0.0	0.0	0.0	0.0	0.0	0.0
Detector 2 Position(ft)		94			94			
Detector 2 Size(ft)		6			6			
Detector 2 Type		Cl+Ex			Cl+Ex			
Detector 2 Channel								
Detector 2 Extend (s)		0.0			0.0			
Turn Type	Prot	NA	Free	Prot	NA	Prot	Free	Prot

DocuSign Envelope ID: 5C03745C-4B01-4834-A65D-B77F558A4F46



Lane Group	EBL	EBT	EBR2	WBL	WBT	SEL	SER2	NWL
Protected Phases	5	2		1	6	4		8
Permitted Phases			Free				Free	
Detector Phase	5	2		1	6	4		8
Switch Phase								
Minimum Initial (s)	7.0	12.0		7.0	12.0	7.0		7.0
Minimum Split (s)	15.3	21.0		14.5	21.0	15.0		15.0
Total Split (s)	28.0	89.0		43.0	104.0	48.0		48.0
Total Split (%)	15.6%	49.4%		23.9%	57.8%	26.7%		26.7%
Maximum Green (s)	19.7	80.0		35.5	95.0	40.0		40.0
Yellow Time (s)	3.1	5.2		3.6	5.2	3.5		3.5
All-Red Time (s)	5.2	3.8		3.9	3.8	4.5		4.5
Lost Time Adjust (s)	-3.3	-4.0		-2.5	-4.0	-3.0		-3.0
Total Lost Time (s)	5.0	5.0		5.0	5.0	5.0		5.0
Lead/Lag	Lag	Lead		Lag	Lead			
Lead-Lag Optimize?	Yes	Yes		Yes	Yes			
Vehicle Extension (s)	2.0	6.0		2.0	6.0	2.0		2.0
Minimum Gap (s)	0.2	3.0		0.2	3.0	0.2		0.2
Time Before Reduce (s)	0.0	15.0		0.0	15.0	0.0		0.0
Time To Reduce (s)	0.0	30.0		0.0	30.0	0.0		0.0
Recall Mode	None	C-Max		None	C-Max	None		None
Act Effct Green (s)	23.0	84.0	180.0	38.0	99.0	43.0	180.0	43.0
Actuated g/C Ratio	0.13	0.47	1.00	0.21	0.55	0.24	1.00	0.24
v/c Ratio	0.65	0.76	0.15	0.65	0.40	1.62	0.21	0.35
Control Delay	83.3	34.3	0.2	58.4	13.6	324.2	0.3	58.5
Queue Delay	0.0	14.2	0.0	1.9	0.8	9.6	0.0	0.0
Total Delay	83.3	48.5	0.2	60.2	14.4	333.8	0.3	58.5
LOS	F	D	A	E	B	F	A	E
Approach Delay		47.8			30.9			
Approach LOS		D			C			
Queue Length 50th (ft)	154	561	0	258	140	~1155	0	142
Queue Length 95th (ft)	208	647	0	327	151	#1292	0	190
Internal Link Dist (ft)		920			338			
Turn Bay Length (ft)	475							
Base Capacity (vph)	393	1536	1420	683	1976	820	1525	786
Starvation Cap Reductn	0	0	0	117	811	0	0	0
Spillback Cap Reductn	0	378	0	0	0	546	0	0
Storage Cap Reductn	0	0	0	0	0	0	0	0
Reduced v/c Ratio	0.65	1.00	0.15	0.78	0.67	4.84	0.21	0.35

Intersection Summary			
Area Type:	Other		
Cycle Length: 180			
Actuated Cycle Length: 180			
Offset: 0 (0%), Referenced to phase 2:EBT and 6:WBT, Start of Green, Master Intersection			
Natural Cycle: 150			
Control Type: Actuated-Coordinated			
Maximum v/c Ratio: 1.64			
Intersection Signal Delay: 120.3		Intersection LOS: F	
Intersection Capacity Utilization 86.8%		ICU Level of Service E	

DocuSign Envelope ID: 5C03745C-4B01-4834-A65D-B77F558A4F46

Analysis Period (min) 15

~ Volume exceeds capacity, queue is theoretically infinite.
Queue shown is maximum after two cycles.

95th percentile volume exceeds capacity, queue may be longer.
Queue shown is maximum after two cycles.

Splits and Phases: 10: I-26 Ramp & NC 146 (Long Shoals Rd)

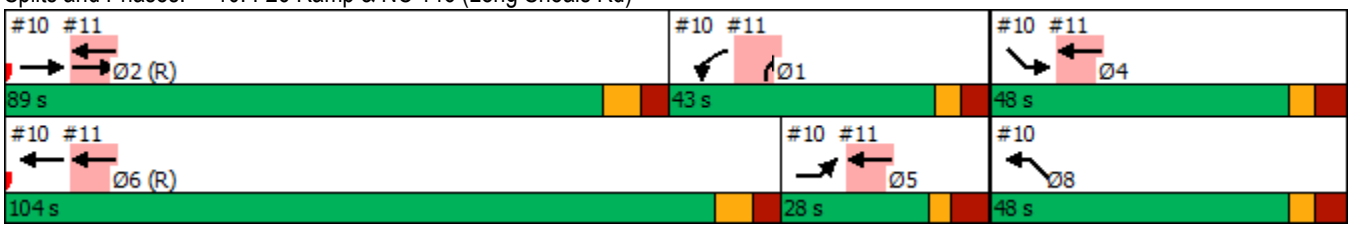

DocuSign Envelope ID: 5C03745C-4B01-4834-A65D-B77F558A4F46

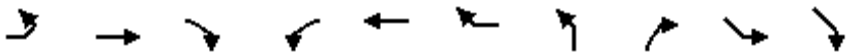

Lane Group	EBL	EBT	EBR	WBL	WBT	WBR	NBL	NBR	SEL	SER	Ø4	Ø5
Lane Configurations												
Traffic Volume (vph)	0	2240	0	0	1105	645	0	795	0	0		
Future Volume (vph)	0	2240	0	0	1105	645	0	795	0	0		
Ideal Flow (vphpl)	1900	1900	1900	1900	1900	1900	1900	1900	1900	1900		
Storage Length (ft)	0		0	0		275	0	0	0	0		
Storage Lanes	0		0	0		1	0	2	0	0		
Taper Length (ft)	25			25			25		25			
Lane Util. Factor	1.00	0.95	1.00	1.00	0.95	1.00	1.00	0.88	1.00	1.00		
Frt						0.850		0.850				
Flt Protected												
Satd. Flow (prot)	0	3471	0	0	3471	1442	0	2733	0	0		
Flt Permitted												
Satd. Flow (perm)	0	3471	0	0	3471	1442	0	2733	0	0		
Right Turn on Red			No			No		No				
Satd. Flow (RTOR)												
Link Speed (mph)		45			45		45		45			
Link Distance (ft)		418			593		396		464			
Travel Time (s)		6.3			9.0		6.0		7.0			
Peak Hour Factor	0.90	0.90	0.90	0.90	0.90	0.90	0.90	0.90	0.90	0.90		
Heavy Vehicles (%)	2%	4%	2%	2%	4%	12%	2%	4%	2%	2%		
Adj. Flow (vph)	0	2489	0	0	1228	717	0	883	0	0		
Shared Lane Traffic (%)												
Lane Group Flow (vph)	0	2489	0	0	1228	717	0	883	0	0		
Enter Blocked Intersection	No	No	No	No	No	No	No	No	No	No		
Lane Alignment	Left	L NA	Right	Left	Right	Right	Left	R NA	Left	Right		
Median Width(ft)		0			24		0		0			
Link Offset(ft)		0			0		0		0			
Crosswalk Width(ft)		16			16		16		16			
Two way Left Turn Lane												
Headway Factor	1.00	1.00	1.00	1.00	1.00	1.00	1.00	1.00	1.00	1.00		
Turning Speed (mph)	15		9	15		9	15	9	15	9		
Number of Detectors		2			2	1		1				
Detector Template		Thru			Thru	Right		Right				
Leading Detector (ft)		100			100	20		20				
Trailing Detector (ft)		0			0	0		0				
Detector 1 Position(ft)		0			0	0		0				
Detector 1 Size(ft)		6			6	20		20				
Detector 1 Type		Cl+Ex			Cl+Ex	Cl+Ex		Cl+Ex				
Detector 1 Channel												
Detector 1 Extend (s)		0.0			0.0	0.0		0.0				
Detector 1 Queue (s)		0.0			0.0	0.0		0.0				
Detector 1 Delay (s)		0.0			0.0	0.0		0.0				
Detector 2 Position(ft)		94			94							
Detector 2 Size(ft)		6			6							
Detector 2 Type		Cl+Ex			Cl+Ex							
Detector 2 Channel												
Detector 2 Extend (s)		0.0			0.0							
Turn Type		NA			NA	Free		Prot				
Protected Phases		2			2 4 5 6			1			4	5

DocuSign Envelope ID: 5C03745C-4B01-4834-A65D-B77F558A4F46

Lane Group	Ø6	Ø8
Lane Configurations		
Traffic Volume (vph)		
Future Volume (vph)		
Ideal Flow (vphpl)		
Storage Length (ft)		
Storage Lanes		
Taper Length (ft)		
Lane Util. Factor		
Frt		
Flt Protected		
Satd. Flow (prot)		
Flt Permitted		
Satd. Flow (perm)		
Right Turn on Red		
Satd. Flow (RTOR)		
Link Speed (mph)		
Link Distance (ft)		
Travel Time (s)		
Peak Hour Factor		
Heavy Vehicles (%)		
Adj. Flow (vph)		
Shared Lane Traffic (%)		
Lane Group Flow (vph)		
Enter Blocked Intersection		
Lane Alignment		
Median Width(ft)		
Link Offset(ft)		
Crosswalk Width(ft)		
Two way Left Turn Lane		
Headway Factor		
Turning Speed (mph)		
Number of Detectors		
Detector Template		
Leading Detector (ft)		
Trailing Detector (ft)		
Detector 1 Position(ft)		
Detector 1 Size(ft)		
Detector 1 Type		
Detector 1 Channel		
Detector 1 Extend (s)		
Detector 1 Queue (s)		
Detector 1 Delay (s)		
Detector 2 Position(ft)		
Detector 2 Size(ft)		
Detector 2 Type		
Detector 2 Channel		
Detector 2 Extend (s)		
Turn Type		
Protected Phases	6	8

DocuSign Envelope ID: 5C03745C-4B01-4834-A65D-B77F558A4F46

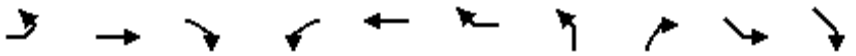

Lane Group	EBL	EBT	EBR	WBL	WBT	WBR	NBL	NBR	SEL	SER	Ø4	Ø5
Permitted Phases						Free						
Detector Phase		2			2 4 5 6			1				
Switch Phase												
Minimum Initial (s)		12.0						7.0			7.0	7.0
Minimum Split (s)		21.0						14.5			15.0	15.3
Total Split (s)		89.0						43.0			48.0	28.0
Total Split (%)		49.4%						23.9%			27%	16%
Maximum Green (s)		80.0						35.5			40.0	19.7
Yellow Time (s)		5.2						3.6			3.5	3.1
All-Red Time (s)		3.8						3.9			4.5	5.2
Lost Time Adjust (s)		0.0						0.0				
Total Lost Time (s)		9.0						7.5				
Lead/Lag		Lead						Lag				Lag
Lead-Lag Optimize?		Yes						Yes				Yes
Vehicle Extension (s)		6.0						2.0			2.0	2.0
Minimum Gap (s)		3.0						0.2			0.2	0.2
Time Before Reduce (s)		15.0						0.0			0.0	0.0
Time To Reduce (s)		30.0						0.0			0.0	0.0
Recall Mode		C-Max						None			None	None
Act Effct Green (s)		80.0			180.0	180.0		35.5				
Actuated g/C Ratio		0.44			1.00	1.00		0.20				
v/c Ratio		1.61			0.35	0.50		1.64				
Control Delay		304.8			0.1	0.9		336.7				
Queue Delay		0.8			0.0	0.0		6.5				
Total Delay		305.6			0.1	0.9		343.2				
LOS		F			A	A		F				
Approach Delay		305.6			0.4		343.2					
Approach LOS		F			A		F					
Queue Length 50th (ft)		~2240			0	0		~852				
Queue Length 95th (ft)		m#1628			m0	m0		#1003				
Internal Link Dist (ft)		338			513		316		384			
Turn Bay Length (ft)						275						
Base Capacity (vph)		1542			3471	1442		539				
Starvation Cap Reductn		67			0	0		0				
Spillback Cap Reductn		289			41	0		258				
Storage Cap Reductn		0			0	0		0				
Reduced v/c Ratio		1.99			0.36	0.50		3.14				

Intersection Summary			
Area Type:	Other		
Cycle Length: 180			
Actuated Cycle Length: 180			
Offset: 0 (0%), Referenced to phase 2:EBT and 6:WBT, Start of Green, Master Intersection			
Natural Cycle: 150			
Control Type: Actuated-Coordinated			
Maximum v/c Ratio: 1.64			
Intersection Signal Delay: 200.2		Intersection LOS: F	
Intersection Capacity Utilization 103.5%		ICU Level of Service G	
Analysis Period (min) 15			

DocuSign Envelope ID: 5C03745C-4B01-4834-A65D-B77F558A4F46

Lane Group	Ø6	Ø8
Permitted Phases		
Detector Phase		
Switch Phase		
Minimum Initial (s)	12.0	7.0
Minimum Split (s)	21.0	15.0
Total Split (s)	104.0	48.0
Total Split (%)	58%	27%
Maximum Green (s)	95.0	40.0
Yellow Time (s)	5.2	3.5
All-Red Time (s)	3.8	4.5
Lost Time Adjust (s)		
Total Lost Time (s)		
Lead/Lag	Lead	
Lead-Lag Optimize?	Yes	
Vehicle Extension (s)	6.0	2.0
Minimum Gap (s)	3.0	0.2
Time Before Reduce (s)	15.0	0.0
Time To Reduce (s)	30.0	0.0
Recall Mode	C-Max	None
Act Effct Green (s)		
Actuated g/C Ratio		
v/c Ratio		
Control Delay		
Queue Delay		
Total Delay		
LOS		
Approach Delay		
Approach LOS		
Queue Length 50th (ft)		
Queue Length 95th (ft)		
Internal Link Dist (ft)		
Turn Bay Length (ft)		
Base Capacity (vph)		
Starvation Cap Reductn		
Spillback Cap Reductn		
Storage Cap Reductn		
Reduced v/c Ratio		

Intersection Summary

DocuSign Envelope ID: 5C03745C-4B01-4834-A65D-B77F558A4F46

~ Volume exceeds capacity, queue is theoretically infinite.
Queue shown is maximum after two cycles.
95th percentile volume exceeds capacity, queue may be longer.
Queue shown is maximum after two cycles.
m Volume for 95th percentile queue is metered by upstream signal.

Splits and Phases: 11: I-26 NWB Ramp & NC 146 (Long Shoals Rd)

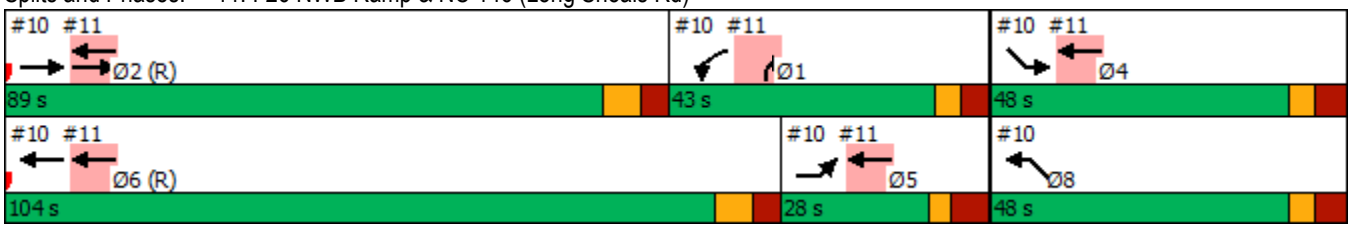

DocuSign Envelope ID: 5C03745C-4B01-4834-A65D-B77F558A4F46

Lane Group	EBL	EBT	EBR	WBL	WBT	WBR	NBL	NBT	NBR	SBL	SBT	SBR
Lane Configurations												
Traffic Volume (vph)	856	2037	142	26	1223	391	51	27	15	357	43	476
Future Volume (vph)	856	2037	142	26	1223	391	51	27	15	357	43	476
Ideal Flow (vphpl)	1900	1900	1900	1900	1900	1900	1900	1900	1900	1900	1900	1900
Grade (%)		6%			-6%			11%			7%	
Storage Length (ft)	350		400	250		225	0		0	450		0
Storage Lanes	2		1	1		1	0		0	1		1
Taper Length (ft)	25			25			25			25		
Lane Util. Factor	0.97	0.95	1.00	1.00	0.95	1.00	1.00	1.00	1.00	0.95	0.95	1.00
Frt			0.850			0.850		0.978				0.850
Flt Protected	0.950			0.950				0.973		0.950	0.962	
Satd. Flow (prot)	3266	3367	1506	1788	3575	1599	0	1627	0	1561	1581	1470
Flt Permitted	0.950			0.950				0.973		0.950	0.962	
Satd. Flow (perm)	3266	3367	1506	1788	3575	1599	0	1627	0	1561	1581	1470
Right Turn on Red			No			No			No			No
Satd. Flow (RTOR)												
Link Speed (mph)		45			45			25			25	
Link Distance (ft)		593			1582			722			992	
Travel Time (s)		9.0			24.0			19.7			27.1	
Peak Hour Factor	0.90	0.90	0.90	0.90	0.90	0.90	0.90	0.90	0.90	0.90	0.90	0.90
Heavy Vehicles (%)	4%	4%	4%	4%	4%	4%	5%	5%	5%	6%	6%	6%
Adj. Flow (vph)	951	2263	158	29	1359	434	57	30	17	397	48	529
Shared Lane Traffic (%)										44%		
Lane Group Flow (vph)	951	2263	158	29	1359	434	0	104	0	222	223	529
Enter Blocked Intersection	No	No	No	No	No	No	No	No	No	No	No	No
Lane Alignment	Left	Left	Right	Left	Left	Right	Left	Left	Right	Left	Left	Right
Median Width(ft)		24			24			0			12	
Link Offset(ft)		0			0			0			0	
Crosswalk Width(ft)		16			16			16			16	
Two way Left Turn Lane												
Headway Factor	1.04	1.04	1.04	0.96	0.96	0.96	1.08	1.08	1.08	1.05	1.05	1.05
Turning Speed (mph)	15		9	15		9	15		9	15		9
Number of Detectors	1	2	1	1	2	1	1	2		1	2	1
Detector Template	Left	Thru	Right	Left	Thru	Right	Left	Thru		Left	Thru	Right
Leading Detector (ft)	20	100	20	20	100	20	20	100		20	100	20
Trailing Detector (ft)	0	0	0	0	0	0	0	0		0	0	0
Detector 1 Position(ft)	0	0	0	0	0	0	0	0		0	0	0
Detector 1 Size(ft)	20	6	20	20	6	20	20	6		20	6	20
Detector 1 Type	Cl+Ex	Cl+Ex	Cl+Ex	Cl+Ex	Cl+Ex	Cl+Ex	Cl+Ex	Cl+Ex		Cl+Ex	Cl+Ex	Cl+Ex
Detector 1 Channel												
Detector 1 Extend (s)	0.0	0.0	0.0	0.0	0.0	0.0	0.0	0.0		0.0	0.0	0.0
Detector 1 Queue (s)	0.0	0.0	0.0	0.0	0.0	0.0	0.0	0.0		0.0	0.0	0.0
Detector 1 Delay (s)	0.0	0.0	0.0	0.0	0.0	0.0	0.0	0.0		0.0	0.0	0.0
Detector 2 Position(ft)		94			94			94			94	
Detector 2 Size(ft)		6			6			6			6	
Detector 2 Type		Cl+Ex			Cl+Ex			Cl+Ex			Cl+Ex	
Detector 2 Channel												
Detector 2 Extend (s)		0.0			0.0			0.0			0.0	
Turn Type	Prot	NA	pm+ov	Prot	NA	pm+ov	Split	NA		Split	NA	pm+ov

DocuSign Envelope ID: 5C03745C-4B01-4834-A65D-B77F558A4F46

Lane Group	EBL	EBT	EBR	WBL	WBT	WBR	NBL	NBT	NBR	SBL	SBT	SBR
Protected Phases	5	2	4	1	6	3	4	4		3	3	5
Permitted Phases			2			6						3
Detector Phase	5	2	4	1	6	3	4	4		3	3	5
Switch Phase												
Minimum Initial (s)	7.0	12.0	7.0	7.0	12.0	7.0	7.0	7.0		7.0	7.0	7.0
Minimum Split (s)	13.3	20.7	39.3	13.3	32.6	13.4	39.3	39.3		13.4	13.4	13.3
Total Split (s)	58.0	120.0	16.0	14.0	76.0	30.0	16.0	16.0		30.0	30.0	58.0
Total Split (%)	32.2%	66.7%	8.9%	7.8%	42.2%	16.7%	8.9%	8.9%		16.7%	16.7%	32.2%
Maximum Green (s)	51.7	114.3	9.7	7.7	69.4	23.6	9.7	9.7		23.6	23.6	51.7
Yellow Time (s)	3.0	4.1	3.0	3.1	5.1	3.0	3.0	3.0		3.0	3.0	3.0
All-Red Time (s)	3.3	1.6	3.3	3.2	1.5	3.4	3.3	3.3		3.4	3.4	3.3
Lost Time Adjust (s)	-1.3	-0.7	-1.3	-1.3	-1.6	-1.4		-1.3		-1.4	-1.4	-1.3
Total Lost Time (s)	5.0	5.0	5.0	5.0	5.0	5.0		5.0		5.0	5.0	5.0
Lead/Lag	Lag	Lag	Lead	Lead	Lead	Lag	Lead	Lead		Lag	Lag	Lag
Lead-Lag Optimize?	Yes	Yes	Yes	Yes	Yes	Yes	Yes	Yes		Yes	Yes	Yes
Vehicle Extension (s)	3.0	6.0	3.0	2.0	6.0	3.0	3.0	3.0		3.0	3.0	3.0
Minimum Gap (s)	0.2	3.0	0.2	0.2	3.0	0.2	0.2	0.2		0.2	0.2	0.2
Time Before Reduce (s)	0.0	20.0	0.0	0.0	20.0	0.0	0.0	0.0		0.0	0.0	0.0
Time To Reduce (s)	0.0	30.0	0.0	0.0	30.0	0.0	0.0	0.0		0.0	0.0	0.0
Recall Mode	None	C-Max	None	None	C-Max	None	None	None		None	None	None
Walk Time (s)		7.0	7.0		7.0		7.0	7.0				
Flash Dont Walk (s)		8.0	26.0		19.0		26.0	26.0				
Pedestrian Calls (#/hr)		0	0		0		0	0				
Act Effct Green (s)	53.0	118.0	134.0	8.6	71.0	101.0		11.0		25.0	25.0	78.0
Actuated g/C Ratio	0.29	0.66	0.74	0.05	0.39	0.56		0.06		0.14	0.14	0.43
v/c Ratio	0.99	1.03	0.14	0.34	0.96	0.48		1.05		1.03	1.02	0.83
Control Delay	47.0	24.5	0.4	93.9	69.5	26.1		180.4		141.1	138.8	43.7
Queue Delay	37.6	30.7	0.0	0.0	0.0	0.0		0.0		0.0	0.0	0.0
Total Delay	84.5	55.2	0.4	93.9	69.5	26.1		180.4		141.1	138.8	43.7
LOS	F	E	A	F	E	C		F		F	F	D
Approach Delay		60.9			59.6			180.4			87.7	
Approach LOS		E			E			F			F	
Queue Length 50th (ft)	564	~1514	6	34	825	302		~133		~292	~291	431
Queue Length 95th (ft)	m280	m92	m4	74	#980	400		#272		#490	#489	572
Internal Link Dist (ft)		513			1502			642			912	
Turn Bay Length (ft)	350		400	250		225				450		
Base Capacity (vph)	961	2207	1121	89	1410	897		99		216	219	637
Starvation Cap Reductn	123	637	0	0	0	0		0		0	0	0
Spillback Cap Reductn	0	0	0	0	0	0		0		0	0	0
Storage Cap Reductn	0	0	0	0	0	0		0		0	0	0
Reduced v/c Ratio	1.13	1.44	0.14	0.33	0.96	0.48		1.05		1.03	1.02	0.83

Intersection Summary	
Area Type:	Other
Cycle Length: 180	
Actuated Cycle Length: 180	
Offset: 18 (10%), Referenced to phase 2:EBT and 6:WBT, Start of Green	
Natural Cycle: 150	
Control Type: Actuated-Coordinated	

DocuSign Envelope ID: 5C03745C-4B01-4834-A65D-B77F558A4F46

Maximum v/c Ratio: 1.05	
Intersection Signal Delay: 66.7	Intersection LOS: E
Intersection Capacity Utilization 91.5%	ICU Level of Service F
Analysis Period (min) 15	

~ Volume exceeds capacity, queue is theoretically infinite.
Queue shown is maximum after two cycles.

95th percentile volume exceeds capacity, queue may be longer.
Queue shown is maximum after two cycles.

m Volume for 95th percentile queue is metered by upstream signal.

Splits and Phases: 12: Skyland Inn Dr/Schenck Pkwy & NC 146 (Long Shoals Rd)

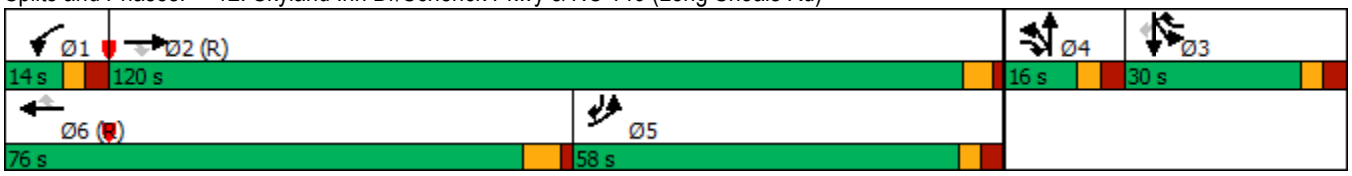

DocuSign Envelope ID: 5C03745C-4B01-4834-A65D-B77F558A4F46

Lane Group	EBL	EBT	EBR	WBL	WBT	WBR	NBL	NBT	NBR	SBL	SBT	SBR
Lane Configurations		↑	↱		↑	↱		↑	↱		↑	↱
Traffic Volume (vph)	211	307	121	219	278	440	66	54	132	185	37	81
Future Volume (vph)	211	307	121	219	278	440	66	54	132	185	37	81
Ideal Flow (vphpl)	1900	1900	1900	1900	1900	1900	1900	1900	1900	1900	1900	1900
Storage Length (ft)	0		200	0		200	0		200	0		200
Storage Lanes	0		1	0		1	0		1	0		1
Taper Length (ft)	25			25			25			25		
Lane Util. Factor	1.00	1.00	1.00	1.00	1.00	1.00	1.00	1.00	1.00	1.00	1.00	1.00
Frt			0.850			0.850			0.850			0.850
Flt Protected		0.980			0.978			0.973			0.960	
Satd. Flow (prot)	0	1773	1538	0	1770	1538	0	1795	1568	0	1754	1553
Flt Permitted		0.980			0.978			0.973			0.960	
Satd. Flow (perm)	0	1773	1538	0	1770	1538	0	1795	1568	0	1754	1553
Link Speed (mph)		35			35			35			35	
Link Distance (ft)		3089			1607			1072			1051	
Travel Time (s)		60.2			31.3			20.9			20.5	
Peak Hour Factor	0.90	0.90	0.90	0.90	0.90	0.90	0.90	0.90	0.90	0.90	0.90	0.90
Heavy Vehicles (%)	5%	5%	5%	5%	5%	5%	3%	3%	3%	4%	4%	4%
Adj. Flow (vph)	234	341	134	243	309	489	73	60	147	206	41	90
Shared Lane Traffic (%)												
Lane Group Flow (vph)	0	575	134	0	552	489	0	133	147	0	247	90
Enter Blocked Intersection	No	No	No	No	No	No	No	No	No	No	No	No
Lane Alignment	Left	Left	Right	Left	Left	Right	Left	Left	Right	Left	Left	Right
Median Width(ft)		12			12			0			0	
Link Offset(ft)		0			0			0			0	
Crosswalk Width(ft)		16			16			16			16	
Two way Left Turn Lane												
Headway Factor	1.00	1.00	1.00	1.00	1.00	1.00	1.00	1.00	1.00	1.00	1.00	1.00
Turning Speed (mph)	15		9	15		9	15		9	15		9
Sign Control		Yield			Yield			Yield			Yield	

Intersection Summary			
Area Type:	Other		
Control Type: Roundabout			
Intersection Capacity Utilization 83.4%		ICU Level of Service E	
Analysis Period (min) 15			

DocuSign Envelope ID: 5C03745C-4B01-4834-A65D-B77F558A4F46



Lane Group	NBL	NBR	SET	SER	NWL	NWT
Lane Configurations						
Traffic Volume (vph)	0	0	0	414	0	384
Future Volume (vph)	0	0	0	414	0	384
Ideal Flow (vphpl)	1900	1900	1900	1900	1900	1900
Lane Util. Factor	1.00	1.00	1.00	*1.00	1.00	0.91
Frt						
Flt Protected						
Satd. Flow (prot)	0	0	0	3393	0	4893
Flt Permitted						
Satd. Flow (perm)	0	0	0	3393	0	4893
Link Speed (mph)	45		45			25
Link Distance (ft)	263		323			131
Travel Time (s)	4.0		4.9			3.6
Peak Hour Factor	0.92	0.92	0.92	0.92	0.92	0.92
Heavy Vehicles (%)	2%	2%	2%	12%	2%	6%
Adj. Flow (vph)	0	0	0	450	0	417
Shared Lane Traffic (%)						
Lane Group Flow (vph)	0	0	0	450	0	417
Enter Blocked Intersection	No	No	No	No	No	No
Lane Alignment	Left	Right	Left	Right	Left	Left
Median Width(ft)	0		8			0
Link Offset(ft)	0		0			0
Crosswalk Width(ft)	16		16			16
Two way Left Turn Lane						
Headway Factor	1.00	1.00	1.00	1.00	1.00	1.00
Turning Speed (mph)	15	9		45	15	
Sign Control	Free		Free			Free

Intersection Summary			
Area Type:	Other		
Control Type: Unsignalized			
Intersection Capacity Utilization 17.8%		ICU Level of Service A	
Analysis Period (min) 15			

* User Entered Value

DocuSign Envelope ID: 5C03745C-4B01-4834-A65D-B77F558A4F46

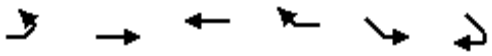

Lane Group	EBL	EBT	WBT	WBR	SEL	SER
Lane Configurations						
Traffic Volume (vph)	0	567	0	261	0	0
Future Volume (vph)	0	567	0	261	0	0
Ideal Flow (vphpl)	1900	1900	1900	1900	1900	1900
Grade (%)		2%	0%		0%	
Lane Util. Factor	1.00	1.00	1.00	*1.00	1.00	1.00
Frt						
Flt Protected						
Satd. Flow (prot)	0	1758	0	3393	0	0
Flt Permitted						
Satd. Flow (perm)	0	1758	0	3393	0	0
Link Speed (mph)		25	45		45	
Link Distance (ft)		718	860		674	
Travel Time (s)		19.6	13.0		10.2	
Peak Hour Factor	0.90	0.90	0.90	0.90	0.90	0.90
Heavy Vehicles (%)	2%	7%	2%	12%	2%	2%
Adj. Flow (vph)	0	630	0	290	0	0
Shared Lane Traffic (%)						
Lane Group Flow (vph)	0	630	0	290	0	0
Enter Blocked Intersection	No	No	No	No	No	No
Lane Alignment	Left	Left	Left	Right	Left	Right
Median Width(ft)		0	12		0	
Link Offset(ft)		0	0		0	
Crosswalk Width(ft)		16	16		16	
Two way Left Turn Lane						
Headway Factor	1.01	1.01	1.00	1.00	1.00	1.00
Turning Speed (mph)	15			45	15	9
Sign Control		Free	Free		Free	

Intersection Summary			
Area Type:	Other		
Control Type: Unsignalized			
Intersection Capacity Utilization 33.2%		ICU Level of Service A	
Analysis Period (min) 15			
* User Entered Value			

DocuSign Envelope ID: 5C03745C-4B01-4834-A65D-B77F558A4F46



Lane Group	EBT	EBR	WBL	WBT	NBL	NBR
Lane Configurations						
Traffic Volume (vph)	0	0	0	645	230	0
Future Volume (vph)	0	0	0	645	230	0
Ideal Flow (vphpl)	1900	1900	1900	1900	1900	1900
Lane Util. Factor	1.00	1.00	1.00	1.00	*1.00	1.00
Frt						
Flt Protected						
Satd. Flow (prot)	0	0	0	1696	3393	0
Flt Permitted						
Satd. Flow (perm)	0	0	0	1696	3393	0
Link Speed (mph)	45			45	45	
Link Distance (ft)	408			464	376	
Travel Time (s)	6.2			7.0	5.7	
Peak Hour Factor	0.90	0.90	0.90	0.90	0.90	0.90
Heavy Vehicles (%)	2%	2%	2%	12%	12%	2%
Adj. Flow (vph)	0	0	0	717	256	0
Shared Lane Traffic (%)						
Lane Group Flow (vph)	0	0	0	717	256	0
Enter Blocked Intersection	No	No	No	No	No	No
Lane Alignment	Left	Right	Left	Left	Left	Right
Median Width(ft)	0			0	24	
Link Offset(ft)	0			0	0	
Crosswalk Width(ft)	16			16	16	
Two way Left Turn Lane						
Headway Factor	1.00	1.00	1.00	1.00	1.00	1.00
Turning Speed (mph)		9	15		45	9
Sign Control	Free			Yield	Free	

Intersection Summary			
Area Type:	Other		
Control Type: Unsignalized			
Intersection Capacity Utilization	47.2%	ICU Level of Service	A
Analysis Period (min)	15		

* User Entered Value

DocuSign Envelope ID: 5C03745C-4B01-4834-A65D-B77F558A4F46

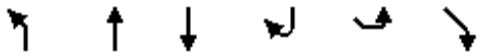

Lane Group	NBL	NBT	SBT	SBR	SEL	SER
Lane Configurations						
Traffic Volume (vph)	250	795	0	0	0	0
Future Volume (vph)	250	795	0	0	0	0
Ideal Flow (vphpl)	1900	1900	1900	1900	1900	1900
Lane Util. Factor	0.91	0.91	1.00	1.00	1.00	1.00
Frt						
Flt Protected	0.950	0.998				
Satd. Flow (prot)	1521	3314	0	0	0	0
Flt Permitted	0.950	0.998				
Satd. Flow (perm)	1521	3314	0	0	0	0
Link Speed (mph)		45	45		45	
Link Distance (ft)		214	396		556	
Travel Time (s)		3.2	6.0		8.4	
Peak Hour Factor	0.90	0.90	0.90	0.90	0.90	0.90
Heavy Vehicles (%)	8%	4%	2%	2%	2%	2%
Adj. Flow (vph)	278	883	0	0	0	0
Shared Lane Traffic (%)	10%					
Lane Group Flow (vph)	250	911	0	0	0	0
Enter Blocked Intersection	No	No	No	No	No	No
Lane Alignment	Right	R NA	Left	Right	Left	Right
Median Width(ft)		12	12		0	
Link Offset(ft)		0	0		0	
Crosswalk Width(ft)		16	16		16	
Two way Left Turn Lane						
Headway Factor	1.00	1.00	1.00	1.00	1.00	1.00
Turning Speed (mph)	45			9	15	9
Sign Control		Free	Free		Free	

Intersection Summary			
Area Type:	Other		
Control Type: Unsignalized			
Intersection Capacity Utilization 25.3%		ICU Level of Service A	
Analysis Period (min) 15			

DocuSign Envelope ID: 5C03745C-4B01-4834-A65D-B77F558A4F46

APPENDIX E

2045 Build Left Entrance/Exit PM Synchro Report

DocuSign Envelope ID: 5C03745C-4B01-4834-A65D-B77F558A4F46

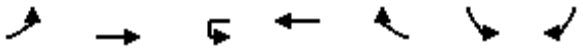

Lane Group	EBL	EBT	WBU	WBT	WBR	SBL	SBR
Lane Configurations							
Traffic Volume (vph)	94	1464	0	1180	106	106	76
Future Volume (vph)	94	1464	0	1180	106	106	76
Ideal Flow (vphpl)	1900	1900	1900	1900	1900	1900	1900
Storage Length (ft)	150		150		175	0	175
Storage Lanes	1		1		1	1	1
Taper Length (ft)	25		25			25	
Lane Util. Factor	1.00	0.95	1.00	0.95	1.00	1.00	1.00
Frt					0.850		0.850
Flt Protected	0.950					0.950	
Satd. Flow (prot)	1703	3406	1792	3406	1524	1703	1524
Flt Permitted	0.950					0.950	
Satd. Flow (perm)	1703	3406	1792	3406	1524	1703	1524
Right Turn on Red					No		No
Satd. Flow (RTOR)							
Link Speed (mph)		45		45		25	
Link Distance (ft)		1606		558		1108	
Travel Time (s)		24.3		8.5		30.2	
Peak Hour Factor	0.90	0.90	0.90	0.90	0.90	0.90	0.90
Heavy Vehicles (%)	6%	6%	6%	6%	6%	6%	6%
Adj. Flow (vph)	104	1627	0	1311	118	118	84
Shared Lane Traffic (%)							
Lane Group Flow (vph)	104	1627	0	1311	118	118	84
Enter Blocked Intersection	No	No	No	No	No	No	No
Lane Alignment	Left	Left	R NA	Left	Right	Left	Right
Median Width(ft)		12		12		12	
Link Offset(ft)		0		0		0	
Crosswalk Width(ft)		16		16		16	
Two way Left Turn Lane							
Headway Factor	1.00	1.00	1.00	1.00	1.00	1.00	1.00
Turning Speed (mph)	15		9		9	15	9
Number of Detectors	1	2	1	2	1	1	1
Detector Template	Left	Thru	Left	Thru	Right	Left	Right
Leading Detector (ft)	20	100	20	100	20	20	20
Trailing Detector (ft)	0	0	0	0	0	0	0
Detector 1 Position(ft)	0	0	0	0	0	0	0
Detector 1 Size(ft)	20	6	20	6	20	20	20
Detector 1 Type	Cl+Ex	Cl+Ex	Cl+Ex	Cl+Ex	Cl+Ex	Cl+Ex	Cl+Ex
Detector 1 Channel							
Detector 1 Extend (s)	0.0	0.0	0.0	0.0	0.0	0.0	0.0
Detector 1 Queue (s)	0.0	0.0	0.0	0.0	0.0	0.0	0.0
Detector 1 Delay (s)	0.0	0.0	0.0	0.0	0.0	0.0	0.0
Detector 2 Position(ft)		94		94			
Detector 2 Size(ft)		6		6			
Detector 2 Type		Cl+Ex		Cl+Ex			
Detector 2 Channel							
Detector 2 Extend (s)		0.0		0.0			
Turn Type	Prot	NA	Prot	NA	pm+ov	Prot	pm+ov
Protected Phases	5	2	1	6	4	4	5

DocuSign Envelope ID: 5C03745C-4B01-4834-A65D-B77F558A4F46

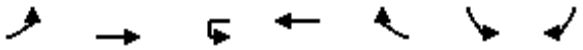

Lane Group	EBL	EBT	WBU	WBT	WBR	SBL	SBR
Permitted Phases					6		4
Detector Phase	5	2	1	6	4	4	5
Switch Phase							
Minimum Initial (s)	7.0	12.0	7.0	12.0	7.0	7.0	7.0
Minimum Split (s)	13.1	18.8	11.9	35.8	36.5	36.5	13.1
Total Split (s)	17.0	71.0	12.0	66.0	37.0	37.0	17.0
Total Split (%)	14.2%	59.2%	10.0%	55.0%	30.8%	30.8%	14.2%
Maximum Green (s)	10.9	64.2	7.1	59.2	30.5	30.5	10.9
Yellow Time (s)	3.0	4.9	3.0	4.9	3.0	3.0	3.0
All-Red Time (s)	3.1	1.9	1.9	1.9	3.5	3.5	3.1
Lost Time Adjust (s)	-1.1	-1.8	0.1	-1.8	-1.8	-1.5	-1.1
Total Lost Time (s)	5.0	5.0	5.0	5.0	4.7	5.0	5.0
Lead/Lag	Lag	Lag	Lead	Lead			Lag
Lead-Lag Optimize?	Yes	Yes	Yes	Yes			Yes
Vehicle Extension (s)	2.0	6.0	2.0	6.0	2.0	2.0	2.0
Minimum Gap (s)	0.2	3.0	0.2	3.0	0.2	0.2	0.2
Time Before Reduce (s)	0.0	15.0	0.0	15.0	0.0	0.0	0.0
Time To Reduce (s)	0.0	30.0	0.0	30.0	0.0	0.0	0.0
Recall Mode	None	C-Max	None	C-Max	None	None	None
Walk Time (s)				7.0	7.0	7.0	
Flash Dont Walk (s)				22.0	23.0	23.0	
Pedestrian Calls (#/hr)				0	0	0	
Act Effct Green (s)	12.0	95.8		78.8	98.3	14.2	31.2
Actuated g/C Ratio	0.10	0.80		0.66	0.82	0.12	0.26
v/c Ratio	0.61	0.60		0.59	0.09	0.59	0.21
Control Delay	67.9	6.2		10.4	1.3	61.2	35.0
Queue Delay	0.0	0.1		0.2	0.0	0.0	0.0
Total Delay	67.9	6.3		10.6	1.3	61.2	35.0
LOS	E	A		B	A	E	D
Approach Delay		10.0		9.9		50.3	
Approach LOS		B		A		D	
Queue Length 50th (ft)	78	207		265	8	88	51
Queue Length 95th (ft)	#146	326		307	m12	144	90
Internal Link Dist (ft)		1526		478		1028	
Turn Bay Length (ft)	150				175		175
Base Capacity (vph)	170	2718		2236	1248	454	396
Starvation Cap Reductn	0	0		271	0	0	0
Spillback Cap Reductn	0	244		0	0	0	0
Storage Cap Reductn	0	0		0	0	0	0
Reduced v/c Ratio	0.61	0.66		0.67	0.09	0.26	0.21

Intersection Summary	
Area Type:	Other
Cycle Length: 120	
Actuated Cycle Length: 120	
Offset: 111 (93%), Referenced to phase 2:EBT and 6:WBT, Start of Green	
Natural Cycle: 100	
Control Type: Actuated-Coordinated	
Maximum v/c Ratio: 0.61	

DocuSign Envelope ID: 5C03745C-4B01-4834-A65D-B77F558A4F46

Intersection Signal Delay: 12.4	Intersection LOS: B
Intersection Capacity Utilization 64.7%	ICU Level of Service C
Analysis Period (min) 15	

\# 95th percentile volume exceeds capacity, queue may be longer.
Queue shown is maximum after two cycles.
m Volume for 95th percentile queue is metered by upstream signal.

Splits and Phases: 1: NC 191 (Brevard Rd) & Commercial Access

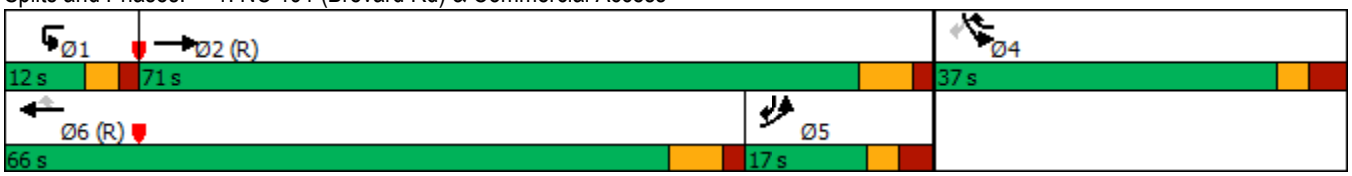

DocuSign Envelope ID: 5C03745C-4B01-4834-A65D-B77F558A4F46

Lane Group	EBT	EBR	WBL	WBT	NBL	NBR
Lane Configurations						
Traffic Volume (vph)	1329	241	321	973	313	66
Future Volume (vph)	1329	241	321	973	313	66
Ideal Flow (vphpl)	1900	1900	1900	1900	1900	1900
Grade (%)	-1%			-1%	0%	
Storage Length (ft)		225	200		0	0
Storage Lanes		1	1		2	1
Taper Length (ft)			25		25	
Lane Util. Factor	0.95	1.00	1.00	0.95	0.97	1.00
Frt		0.850				0.850
Flt Protected			0.950		0.950	
Satd. Flow (prot)	3423	1449	1620	3423	3303	1524
Flt Permitted			0.950		0.950	
Satd. Flow (perm)	3423	1449	1620	3423	3303	1524
Right Turn on Red		No				Yes
Satd. Flow (RTOR)						16
Link Speed (mph)	45			45	45	
Link Distance (ft)	558			1204	323	
Travel Time (s)	8.5			18.2	4.9	
Peak Hour Factor	0.90	0.90	0.90	0.90	0.90	0.90
Heavy Vehicles (%)	6%	12%	12%	6%	6%	6%
Adj. Flow (vph)	1477	268	357	1081	348	73
Shared Lane Traffic (%)						
Lane Group Flow (vph)	1477	268	357	1081	348	73
Enter Blocked Intersection	No	No	No	No	No	No
Lane Alignment	Left	Right	Left	Left	Left	Right
Median Width(ft)	12			12	40	
Link Offset(ft)	0			0	0	
Crosswalk Width(ft)	16			16	16	
Two way Left Turn Lane						
Headway Factor	0.99	0.99	0.99	0.99	1.00	1.00
Turning Speed (mph)		9	15		15	9
Number of Detectors	2	1	1	2	1	1
Detector Template	Thru	Right	Left	Thru	Left	Right
Leading Detector (ft)	100	20	20	100	20	20
Trailing Detector (ft)	0	0	0	0	0	0
Detector 1 Position(ft)	0	0	0	0	0	0
Detector 1 Size(ft)	6	20	20	6	20	20
Detector 1 Type	Cl+Ex	Cl+Ex	Cl+Ex	Cl+Ex	Cl+Ex	Cl+Ex
Detector 1 Channel						
Detector 1 Extend (s)	0.0	0.0	0.0	0.0	0.0	0.0
Detector 1 Queue (s)	0.0	0.0	0.0	0.0	0.0	0.0
Detector 1 Delay (s)	0.0	0.0	0.0	0.0	0.0	0.0
Detector 2 Position(ft)	94			94		
Detector 2 Size(ft)	6			6		
Detector 2 Type	Cl+Ex			Cl+Ex		
Detector 2 Channel						
Detector 2 Extend (s)	0.0			0.0		
Turn Type	NA	pm+ov	Prot	NA	Prot	pm+ov

DocuSign Envelope ID: 5C03745C-4B01-4834-A65D-B77F558A4F46



Lane Group	EBT	EBR	WBL	WBT	NBL	NBR
Protected Phases	2	4	1	6	4	1
Permitted Phases		2				4
Detector Phase	2	4	1	6	4	1
Switch Phase						
Minimum Initial (s)	12.0	7.0	10.0	12.0	7.0	10.0
Minimum Split (s)	18.0	13.9	16.3	18.6	13.9	16.3
Total Split (s)	62.0	21.0	37.0	99.0	21.0	37.0
Total Split (%)	51.7%	17.5%	30.8%	82.5%	17.5%	30.8%
Maximum Green (s)	56.0	14.1	30.7	92.4	14.1	30.7
Yellow Time (s)	4.4	3.0	3.0	4.7	3.0	3.0
All-Red Time (s)	1.6	3.9	3.3	1.9	3.9	3.3
Lost Time Adjust (s)	-1.0	-1.9	-1.3	-1.6	-1.9	-1.9
Total Lost Time (s)	5.0	5.0	5.0	5.0	5.0	4.4
Lead/Lag	Lead		Lag			Lag
Lead-Lag Optimize?	Yes		Yes			Yes
Vehicle Extension (s)	6.0	5.0	2.5	6.0	5.0	2.5
Minimum Gap (s)	3.0	0.2	0.2	3.0	0.2	0.2
Time Before Reduce (s)	15.0	0.0	0.0	15.0	0.0	0.0
Time To Reduce (s)	30.0	0.0	0.0	30.0	0.0	0.0
Recall Mode	C-Max	None	None	C-Max	None	None
Act Effct Green (s)	57.0	78.0	32.0	94.0	16.0	53.6
Actuated g/C Ratio	0.48	0.65	0.27	0.78	0.13	0.45
v/c Ratio	0.91	0.28	0.83	0.40	0.79	0.11
Control Delay	32.5	9.1	35.7	3.7	64.3	15.7
Queue Delay	2.5	0.0	0.0	0.0	0.0	0.0
Total Delay	35.0	9.1	35.7	3.7	64.3	15.7
LOS	C	A	D	A	E	B
Approach Delay	31.0			11.6	55.9	
Approach LOS	C			B	E	
Queue Length 50th (ft)	554	76	272	78	136	25
Queue Length 95th (ft)	#516	115	#425	90	#202	54
Internal Link Dist (ft)	478			1124	243	
Turn Bay Length (ft)		225	200			
Base Capacity (vph)	1625	941	432	2681	440	689
Starvation Cap Reductn	75	0	0	0	0	0
Spillback Cap Reductn	0	0	0	0	0	0
Storage Cap Reductn	0	0	0	0	0	0
Reduced v/c Ratio	0.95	0.28	0.83	0.40	0.79	0.11

Intersection Summary			
Area Type:	Other		
Cycle Length: 120			
Actuated Cycle Length: 120			
Offset: 77 (64%), Referenced to phase 2:EBT and 6:WBT, Start of Green			
Natural Cycle: 90			
Control Type: Actuated-Coordinated			
Maximum v/c Ratio: 0.91			
Intersection Signal Delay: 26.2		Intersection LOS: C	
Intersection Capacity Utilization 76.0%		ICU Level of Service D	

DocuSign Envelope ID: 5C03745C-4B01-4834-A65D-B77F558A4F46

Analysis Period (min) 15

\# 95th percentile volume exceeds capacity, queue may be longer.

Queue shown is maximum after two cycles.

Splits and Phases: 2: I-26 SEB Ramps & NC 191 (Brevard Rd)

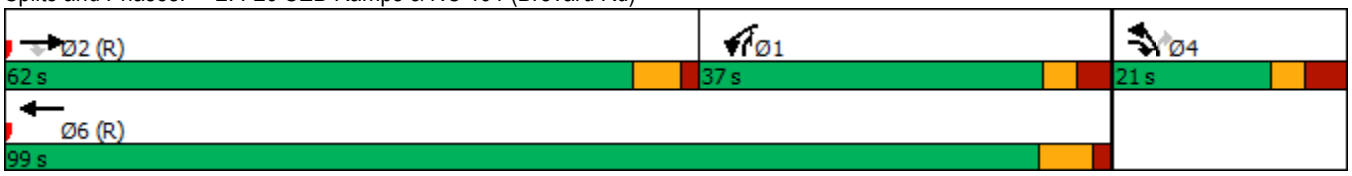

DocuSign Envelope ID: 5C03745C-4B01-4834-A65D-B77F558A4F46

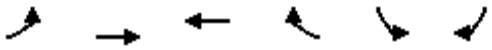

Lane Group	EBL	EBT	WBT	WBR	SBL	SBR
Lane Configurations						
Traffic Volume (vph)	336	1059	1092	55	345	202
Future Volume (vph)	336	1059	1092	55	345	202
Ideal Flow (vphpl)	1900	1900	1900	1900	1900	1900
Grade (%)		2%	-2%		2%	
Storage Length (ft)	625			200	0	400
Storage Lanes	2			1	2	1
Taper Length (ft)	25				25	
Lane Util. Factor	0.97	0.95	0.95	1.00	0.97	1.00
Frt				0.850		0.850
Flt Protected	0.950				0.950	
Satd. Flow (prot)	3095	3340	3408	1456	3240	1494
Flt Permitted	0.950				0.950	
Satd. Flow (perm)	3095	3340	3408	1456	3240	1494
Right Turn on Red				No		No
Satd. Flow (RTOR)						
Link Speed (mph)		45	45		45	
Link Distance (ft)		802	1565		860	
Travel Time (s)		12.2	23.7		13.0	
Peak Hour Factor	0.90	0.90	0.90	0.90	0.90	0.90
Heavy Vehicles (%)	12%	7%	7%	12%	7%	7%
Adj. Flow (vph)	373	1177	1213	61	383	224
Shared Lane Traffic (%)						
Lane Group Flow (vph)	373	1177	1213	61	383	224
Enter Blocked Intersection	No	No	No	No	No	No
Lane Alignment	Left	Left	Left	Right	Left	Right
Median Width(ft)		24	12		36	
Link Offset(ft)		0	0		0	
Crosswalk Width(ft)		16	16		16	
Two way Left Turn Lane						
Headway Factor	1.01	1.01	0.99	0.99	1.01	1.01
Turning Speed (mph)	15			9	15	9
Number of Detectors	1	2	2	1	1	1
Detector Template	Left	Thru	Thru	Right	Left	Right
Leading Detector (ft)	20	100	100	20	20	20
Trailing Detector (ft)	0	0	0	0	0	0
Detector 1 Position(ft)	0	0	0	0	0	0
Detector 1 Size(ft)	20	6	6	20	20	20
Detector 1 Type	Cl+Ex	Cl+Ex	Cl+Ex	Cl+Ex	Cl+Ex	Cl+Ex
Detector 1 Channel						
Detector 1 Extend (s)	0.0	0.0	0.0	0.0	0.0	0.0
Detector 1 Queue (s)	0.0	0.0	0.0	0.0	0.0	0.0
Detector 1 Delay (s)	0.0	0.0	0.0	0.0	0.0	0.0
Detector 2 Position(ft)		94	94			
Detector 2 Size(ft)		6	6			
Detector 2 Type		Cl+Ex	Cl+Ex			
Detector 2 Channel						
Detector 2 Extend (s)		0.0	0.0			
Turn Type	Prot	NA	NA	pm+ov	Prot	pm+ov

DocuSign Envelope ID: 5C03745C-4B01-4834-A65D-B77F558A4F46

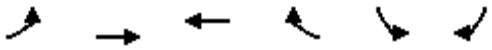

Lane Group	EBL	EBT	WBT	WBR	SBL	SBR
Protected Phases	5	2	6	4	4	5
Permitted Phases				6		4
Detector Phase	5	2	6	4	4	5
Switch Phase						
Minimum Initial (s)	7.0	12.0	12.0	7.0	7.0	7.0
Minimum Split (s)	14.0	19.0	25.0	25.0	25.0	14.0
Total Split (s)	28.0	93.0	65.0	27.0	27.0	28.0
Total Split (%)	23.3%	77.5%	54.2%	22.5%	22.5%	23.3%
Maximum Green (s)	21.0	86.0	58.0	20.0	20.0	21.0
Yellow Time (s)	5.0	5.0	5.0	5.0	5.0	5.0
All-Red Time (s)	2.0	2.0	2.0	2.0	2.0	2.0
Lost Time Adjust (s)	-2.0	-2.0	-2.0	-2.0	-2.0	-2.0
Total Lost Time (s)	5.0	5.0	5.0	5.0	5.0	5.0
Lead/Lag	Lag		Lead			Lag
Lead-Lag Optimize?	Yes		Yes			Yes
Vehicle Extension (s)	3.0	3.0	3.0	3.0	3.0	3.0
Minimum Gap (s)	0.2	3.0	3.0	0.2	0.2	0.2
Time Before Reduce (s)	0.0	15.0	15.0	0.0	0.0	0.0
Time To Reduce (s)	0.0	30.0	30.0	0.0	0.0	0.0
Recall Mode	None	C-Max	C-Max	None	None	None
Walk Time (s)			7.0	7.0	7.0	
Flash Dont Walk (s)			11.0	11.0	11.0	
Pedestrian Calls (#/hr)			0	0	0	
Act Effct Green (s)	23.0	89.8	61.8	87.0	20.2	48.2
Actuated g/C Ratio	0.19	0.75	0.52	0.72	0.17	0.40
v/c Ratio	0.63	0.47	0.69	0.06	0.70	0.37
Control Delay	18.2	1.1	24.9	4.9	54.4	27.1
Queue Delay	0.0	0.0	0.0	0.0	0.0	0.0
Total Delay	18.2	1.1	24.9	4.9	54.4	27.1
LOS	B	A	C	A	D	C
Approach Delay		5.2	23.9		44.3	
Approach LOS		A	C		D	
Queue Length 50th (ft)	122	20	366	12	144	118
Queue Length 95th (ft)	m123	m24	454	24	196	183
Internal Link Dist (ft)		722	1485		780	
Turn Bay Length (ft)	625			200		400
Base Capacity (vph)	593	2499	1755	1039	594	599
Starvation Cap Reductn	0	0	0	0	0	0
Spillback Cap Reductn	0	0	0	0	0	0
Storage Cap Reductn	0	0	0	0	0	0
Reduced v/c Ratio	0.63	0.47	0.69	0.06	0.64	0.37

Intersection Summary	
Area Type:	Other
Cycle Length: 120	
Actuated Cycle Length: 120	
Offset: 77 (64%), Referenced to phase 2:EBT and 6:WBT, Start of Green	
Natural Cycle: 75	
Control Type: Actuated-Coordinated	

DocuSign Envelope ID: 5C03745C-4B01-4834-A65D-B77F558A4F46

Maximum v/c Ratio: 0.70	
Intersection Signal Delay: 19.1	Intersection LOS: B
Intersection Capacity Utilization 62.1%	ICU Level of Service B
Analysis Period (min) 15	

m Volume for 95th percentile queue is metered by upstream signal.

Splits and Phases: 3: NC 191 (Brevard Rd) & I-26 NWB Ramps

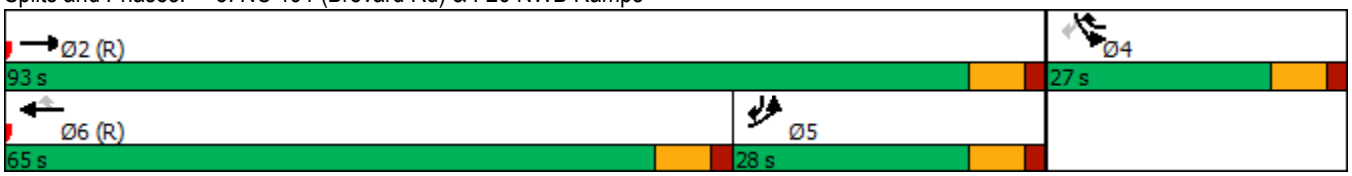

DocuSign Envelope ID: 5C03745C-4B01-4834-A65D-B77F558A4F46

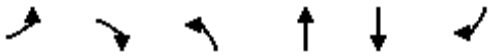

Lane Group	EBL	EBR	NBL	NBT	SBT	SBR
Lane Configurations						
Traffic Volume (vph)	94	17	14	247	193	56
Future Volume (vph)	94	17	14	247	193	56
Ideal Flow (vphpl)	1900	1900	1900	1900	1900	1900
Grade (%)	0%			0%	3%	
Storage Length (ft)	75	0	275			0
Storage Lanes	1	1	1			0
Taper Length (ft)	25		25			
Lane Util. Factor	1.00	1.00	1.00	1.00	1.00	1.00
Ped Bike Factor						
Frt		0.850			0.970	
Flt Protected	0.950		0.950			
Satd. Flow (prot)	1770	1583	1770	1863	1780	0
Flt Permitted	0.950		0.950			
Satd. Flow (perm)	1770	1583	1770	1863	1780	0
Link Speed (mph)	20			35	35	
Link Distance (ft)	1081			1059	248	
Travel Time (s)	36.9			20.6	4.8	
Confl. Bikes (#/hr)						159
Peak Hour Factor	0.90	0.90	0.90	0.90	0.90	0.90
Adj. Flow (vph)	104	19	16	274	214	62
Shared Lane Traffic (%)						
Lane Group Flow (vph)	104	19	16	274	276	0
Enter Blocked Intersection	No	No	No	No	No	No
Lane Alignment	Left	Right	Left	Left	Left	Right
Median Width(ft)	12			12	0	
Link Offset(ft)	0			0	0	
Crosswalk Width(ft)	16			16	16	
Two way Left Turn Lane						
Headway Factor	1.00	1.00	1.00	1.00	1.02	1.02
Turning Speed (mph)	15	9	15			9
Sign Control	Stop			Free	Free	

Intersection Summary			
Area Type:	Other		
Control Type: Unsignalized			
Intersection Capacity Utilization 25.4%		ICU Level of Service A	
Analysis Period (min) 15			

DocuSign Envelope ID: 5C03745C-4B01-4834-A65D-B77F558A4F46

Lane Group	EBL	EBT	EBR	WBL	WBT	WBR	NBL	NBT	NBR	SBL	SBT	SBR
Lane Configurations												
Traffic Volume (vph)	111	152	78	111	135	442	56	952	89	260	697	58
Future Volume (vph)	111	152	78	111	135	442	56	952	89	260	697	58
Ideal Flow (vphpl)	1900	1900	1900	1900	1900	1900	1900	1900	1900	1900	1900	1900
Grade (%)		3%			0%			2%			-7%	
Storage Length (ft)	0		0	200		0	175		150	200		0
Storage Lanes	1		0	1		1	1		1	2		0
Taper Length (ft)	25			25			25			25		
Lane Util. Factor	1.00	0.95	0.95	1.00	1.00	1.00	1.00	0.95	1.00	0.97	0.95	0.95
Frt		0.949				0.850			0.850		0.989	
Flt Protected	0.950			0.950			0.950			0.950		
Satd. Flow (prot)	1743	3308	0	1719	1810	1538	1686	3372	1508	3452	3519	0
Flt Permitted	0.950			0.950			0.950			0.950		
Satd. Flow (perm)	1743	3308	0	1719	1810	1538	1686	3372	1508	3452	3519	0
Right Turn on Red			No			No			No			No
Satd. Flow (RTOR)												
Link Speed (mph)		35			35			45			45	
Link Distance (ft)		248			1200			1589			1600	
Travel Time (s)		4.8			23.4			24.1			24.2	
Peak Hour Factor	0.90	0.90	0.90	0.90	0.90	0.90	0.90	0.90	0.90	0.90	0.90	0.90
Heavy Vehicles (%)	2%	2%	2%	5%	5%	5%	6%	6%	6%	5%	5%	5%
Adj. Flow (vph)	123	169	87	123	150	491	62	1058	99	289	774	64
Shared Lane Traffic (%)												
Lane Group Flow (vph)	123	256	0	123	150	491	62	1058	99	289	838	0
Enter Blocked Intersection	No	No	No	No	No	No	No	No	No	No	No	No
Lane Alignment	L NA	Left	Right	Left	Left	Left	Left	L NA	Right	Left	Left	Right
Median Width(ft)		12			12			24			24	
Link Offset(ft)		0			0			0			0	
Crosswalk Width(ft)		16			16			16			16	
Two way Left Turn Lane												
Headway Factor	1.02	1.02	1.02	1.00	1.00	1.00	1.01	1.01	1.01	0.96	0.96	0.96
Turning Speed (mph)	15		9	15		9	15		9	15		9
Number of Detectors	1	2		1	2	1	1	2	1	1	2	
Detector Template	Left	Thru		Left	Thru	Right	Left	Thru	Right	Left	Thru	
Leading Detector (ft)	20	100		20	100	20	20	100	20	20	100	
Trailing Detector (ft)	0	0		0	0	0	0	0	0	0	0	
Detector 1 Position(ft)	0	0		0	0	0	0	0	0	0	0	
Detector 1 Size(ft)	20	6		20	6	20	20	6	20	20	6	
Detector 1 Type	Cl+Ex	Cl+Ex		Cl+Ex	Cl+Ex	Cl+Ex	Cl+Ex	Cl+Ex	Cl+Ex	Cl+Ex	Cl+Ex	
Detector 1 Channel												
Detector 1 Extend (s)	0.0	0.0		0.0	0.0	0.0	0.0	0.0	0.0	0.0	0.0	
Detector 1 Queue (s)	0.0	0.0		0.0	0.0	0.0	0.0	0.0	0.0	0.0	0.0	
Detector 1 Delay (s)	0.0	0.0		0.0	0.0	0.0	0.0	0.0	0.0	0.0	0.0	
Detector 2 Position(ft)		94			94			94			94	
Detector 2 Size(ft)		6			6			6			6	
Detector 2 Type		Cl+Ex			Cl+Ex			Cl+Ex			Cl+Ex	
Detector 2 Channel												
Detector 2 Extend (s)		0.0			0.0			0.0			0.0	
Turn Type	Prot	NA		Prot	NA	pm+ov	Prot	NA	pm+ov	Prot	NA	

DocuSign Envelope ID: 5C03745C-4B01-4834-A65D-B77F558A4F46

Lane Group	EBL	EBT	EBR	WBL	WBT	WBR	NBL	NBT	NBR	SBL	SBT	SBR
Protected Phases	7	4		3	8	1	5	2	3	1	6	
Permitted Phases						8			2			
Detector Phase	7	4		3	8	1	5	2	3	1	6	
Switch Phase												
Minimum Initial (s)	7.0	7.0		7.0	7.0	7.0	7.0	12.0	7.0	7.0	12.0	
Minimum Split (s)	14.0	14.0		14.0	14.0	14.0	14.0	19.0	14.0	14.0	19.0	
Total Split (s)	17.0	18.0		17.0	18.0	34.0	15.0	51.0	17.0	34.0	70.0	
Total Split (%)	14.2%	15.0%		14.2%	15.0%	28.3%	12.5%	42.5%	14.2%	28.3%	58.3%	
Maximum Green (s)	10.0	11.0		10.0	11.0	27.0	8.0	44.0	10.0	27.0	63.0	
Yellow Time (s)	5.0	5.0		5.0	5.0	5.0	5.0	5.0	5.0	5.0	5.0	
All-Red Time (s)	2.0	2.0		2.0	2.0	2.0	2.0	2.0	2.0	2.0	2.0	
Lost Time Adjust (s)	-2.0	-2.0		-2.0	-2.0	-2.0	-2.0	-2.0	-2.0	-2.0	-2.0	
Total Lost Time (s)	5.0	5.0		5.0	5.0	5.0	5.0	5.0	5.0	5.0	5.0	
Lead/Lag	Lead	Lag		Lead	Lag	Lead	Lead	Lag	Lead	Lead	Lag	
Lead-Lag Optimize?	Yes	Yes		Yes	Yes	Yes	Yes	Yes	Yes	Yes	Yes	
Vehicle Extension (s)	3.0	3.0		3.0	3.0	3.0	3.0	3.0	3.0	3.0	3.0	
Minimum Gap (s)	3.0	3.0		3.0	3.0	3.0	3.0	3.0	3.0	3.0	3.0	
Time Before Reduce (s)	0.0	0.0		0.0	0.0	0.0	0.0	15.0	0.0	0.0	15.0	
Time To Reduce (s)	0.0	0.0		0.0	0.0	0.0	0.0	30.0	0.0	0.0	30.0	
Recall Mode	None	None		None	None	None	None	Min	None	None	Min	
Act Effct Green (s)	11.7	12.8		11.8	12.8	43.3	9.9	41.9	58.7	25.3	60.9	
Actuated g/C Ratio	0.10	0.11		0.11	0.11	0.39	0.09	0.37	0.52	0.23	0.54	
v/c Ratio	0.68	0.68		0.68	0.72	0.83	0.42	0.84	0.13	0.37	0.44	
Control Delay	70.0	59.3		70.9	70.7	45.2	61.1	39.6	14.8	38.6	16.8	
Queue Delay	0.0	0.0		0.0	0.0	0.0	0.0	0.0	0.0	0.0	0.0	
Total Delay	70.0	59.3		70.9	70.7	45.2	61.1	39.6	14.8	38.6	16.8	
LOS	E	E		E	E	D	E	D	B	D	B	
Approach Delay		62.8			54.3			38.7			22.4	
Approach LOS		E			D			D			C	
Queue Length 50th (ft)	94	102		94	115	336	46	383	38	95	197	
Queue Length 95th (ft)	#184	#150		#186	#219	#517	93	473	68	137	246	
Internal Link Dist (ft)		168			1120			1509			1520	
Turn Bay Length (ft)				200			175		150	200		
Base Capacity (vph)	189	388		186	213	649	152	1402	795	905	2068	
Starvation Cap Reductn	0	0		0	0	0	0	0	0	0	0	
Spillback Cap Reductn	0	0		0	0	0	0	0	0	0	0	
Storage Cap Reductn	0	0		0	0	0	0	0	0	0	0	
Reduced v/c Ratio	0.65	0.66		0.66	0.70	0.76	0.41	0.75	0.12	0.32	0.41	

Intersection Summary			
Area Type:	Other		
Cycle Length: 120			
Actuated Cycle Length: 112.1			
Natural Cycle: 80			
Control Type: Actuated-Uncoordinated			
Maximum v/c Ratio: 0.84			
Intersection Signal Delay: 39.4		Intersection LOS: D	
Intersection Capacity Utilization 72.3%		ICU Level of Service C	
Analysis Period (min) 15			

DocuSign Envelope ID: 5C03745C-4B01-4834-A65D-B77F558A4F46

95th percentile volume exceeds capacity, queue may be longer.
Queue shown is maximum after two cycles.

Splits and Phases: 5: NC 191 (Brevard Rd) & Blue Ridge Pkwy Access/NC 191 Connector

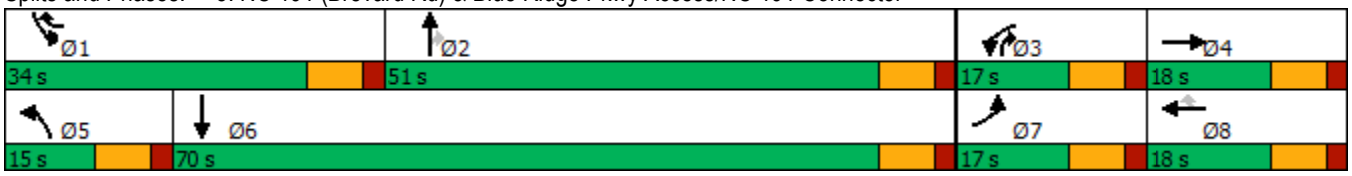

DocuSign Envelope ID: 5C03745C-4B01-4834-A65D-B77F558A4F46

Lane Group	EBL	EBT	EBR	WBL	WBT	WBR	NBL	NBT	NBR	SBL	SBT	SBR
Lane Configurations												
Traffic Volume (vph)	0	499	459	1	360	0	0	0	0	0	1	435
Future Volume (vph)	0	499	459	1	360	0	0	0	0	0	1	435
Ideal Flow (vphpl)	1900	1900	1900	1900	1900	1900	1900	1900	1900	1900	1900	1900
Storage Length (ft)	0		200	0		0	0		0	0		325
Storage Lanes	0		1	0		0	0		0	0		1
Taper Length (ft)	25			25			25			25		
Lane Util. Factor	1.00	1.00	1.00	1.00	1.00	1.00	1.00	1.00	1.00	1.00	1.00	1.00
Frt			0.850									0.850
Flt Protected												
Satd. Flow (prot)	0	1810	1442	0	1809	0	0	0	0	0	1696	1538
Flt Permitted												
Satd. Flow (perm)	0	1810	1442	0	1809	0	0	0	0	0	1696	1538
Link Speed (mph)		35			35			45			45	
Link Distance (ft)		362			276			839			1024	
Travel Time (s)		7.1			5.4			12.7			15.5	
Peak Hour Factor	0.90	0.90	0.90	0.90	0.90	0.90	0.90	0.90	0.90	0.90	0.90	0.90
Heavy Vehicles (%)	2%	5%	12%	12%	5%	2%	2%	2%	2%	2%	12%	5%
Adj. Flow (vph)	0	554	510	1	400	0	0	0	0	0	1	483
Shared Lane Traffic (%)												
Lane Group Flow (vph)	0	554	510	0	401	0	0	0	0	0	1	483
Enter Blocked Intersection	No	No	No	No	No	No	No	No	No	No	No	No
Lane Alignment	Left	Left	Right	Left	L NA	Right	Left	Left	Right	Left	Left	Right
Median Width(ft)		12			0			0			0	
Link Offset(ft)		0			0			0			0	
Crosswalk Width(ft)		16			16			16			16	
Two way Left Turn Lane												
Headway Factor	1.00	1.00	1.00	1.00	1.00	1.00	1.00	1.00	1.00	1.00	1.00	1.00
Turning Speed (mph)	15		9	15		9	15		9	15		9
Sign Control		Free			Free			Stop			Stop	

Intersection Summary			
Area Type:	Other		
Control Type: Unsignalized			
Intersection Capacity Utilization	60.8%	ICU Level of Service	B
Analysis Period (min)	15		

DocuSign Envelope ID: 5C03745C-4B01-4834-A65D-B77F558A4F46

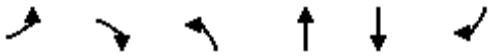

Lane Group	EBL	EBR	NBL	NBT	SBT	SBR
Lane Configurations						
Traffic Volume (vph)	499	0	360	1	0	0
Future Volume (vph)	499	0	360	1	0	0
Ideal Flow (vphpl)	1900	1900	1900	1900	1900	1900
Lane Util. Factor	1.00	1.00	1.00	1.00	1.00	1.00
Frt						
Flt Protected	0.950			0.952		
Satd. Flow (prot)	1612	0	0	1722	0	0
Flt Permitted	0.950			0.952		
Satd. Flow (perm)	1612	0	0	1722	0	0
Right Turn on Red		No				No
Satd. Flow (RTOR)						
Link Speed (mph)	35			45	45	
Link Distance (ft)	276			994	576	
Travel Time (s)	5.4			15.1	8.7	
Peak Hour Factor	0.90	0.90	0.90	0.90	0.90	0.90
Heavy Vehicles (%)	12%	2%	5%	12%	2%	2%
Adj. Flow (vph)	554	0	400	1	0	0
Shared Lane Traffic (%)						
Lane Group Flow (vph)	554	0	0	401	0	0
Enter Blocked Intersection	No	No	No	No	No	No
Lane Alignment	Left	Right	Left	Left	Left	Right
Median Width(ft)	12			0	0	
Link Offset(ft)	0			0	0	
Crosswalk Width(ft)	16			16	16	
Two way Left Turn Lane						
Headway Factor	1.00	1.00	1.00	1.00	1.00	1.00
Turning Speed (mph)	15	9	15			9
Number of Detectors	1		1	2		
Detector Template	Left		Left	Thru		
Leading Detector (ft)	20		20	100		
Trailing Detector (ft)	0		0	0		
Detector 1 Position(ft)	0		0	0		
Detector 1 Size(ft)	20		20	6		
Detector 1 Type	Cl+Ex		Cl+Ex	Cl+Ex		
Detector 1 Channel						
Detector 1 Extend (s)	0.0		0.0	0.0		
Detector 1 Queue (s)	0.0		0.0	0.0		
Detector 1 Delay (s)	0.0		0.0	0.0		
Detector 2 Position(ft)				94		
Detector 2 Size(ft)				6		
Detector 2 Type				Cl+Ex		
Detector 2 Channel						
Detector 2 Extend (s)				0.0		
Turn Type	Prot		Split	NA		
Protected Phases	2		4	4		
Permitted Phases						
Detector Phase	2		4	4		
Switch Phase						

DocuSign Envelope ID: 5C03745C-4B01-4834-A65D-B77F558A4F46

Lane Group	EBL	EBR	NBL	NBT	SBT	SBR
Minimum Initial (s)	10.0		7.0	7.0		
Minimum Split (s)	17.0		14.0	14.0		
Total Split (s)	35.0		25.0	25.0		
Total Split (%)	58.3%		41.7%	41.7%		
Maximum Green (s)	28.0		18.0	18.0		
Yellow Time (s)	5.0		5.0	5.0		
All-Red Time (s)	2.0		2.0	2.0		
Lost Time Adjust (s)	-2.0			-2.0		
Total Lost Time (s)	5.0			5.0		
Lead/Lag						
Lead-Lag Optimize?						
Vehicle Extension (s)	3.0		3.0	3.0		
Recall Mode	Min		None	None		
Act Effct Green (s)	23.7			17.5		
Actuated g/C Ratio	0.46			0.34		
v/c Ratio	0.75			0.69		
Control Delay	19.0			23.4		
Queue Delay	0.0			0.0		
Total Delay	19.0			23.4		
LOS	B			C		
Approach Delay	19.0			23.4		
Approach LOS	B			C		
Queue Length 50th (ft)	140			107		
Queue Length 95th (ft)	245			#221		
Internal Link Dist (ft)	196			914	496	
Turn Bay Length (ft)						
Base Capacity (vph)	973			693		
Starvation Cap Reductn	0			0		
Spillback Cap Reductn	0			0		
Storage Cap Reductn	0			0		
Reduced v/c Ratio	0.57			0.58		

Intersection Summary			
Area Type:	Other		
Cycle Length: 60			
Actuated Cycle Length: 51.6			
Natural Cycle: 55			
Control Type: Actuated-Uncoordinated			
Maximum v/c Ratio: 0.75			
Intersection Signal Delay: 20.9		Intersection LOS: C	
Intersection Capacity Utilization 56.0%		ICU Level of Service B	
Analysis Period (min) 15			
# 95th percentile volume exceeds capacity, queue may be longer.			
Queue shown is maximum after two cycles.			

Splits and Phases: 7: HE-0001 NWB Ramp & NC 191 Connector

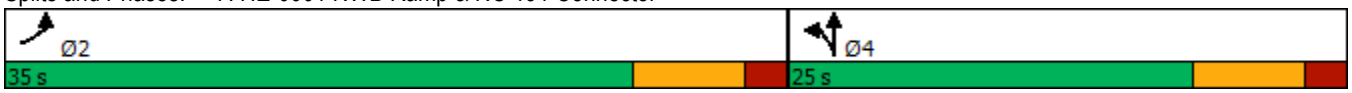

DocuSign Envelope ID: 5C03745C-4B01-4834-A65D-B77F558A4F46

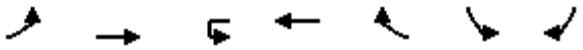

Lane Group	EBL	EBT	WBU	WBT	WBR	SBL	SBR
Lane Configurations							
Traffic Volume (vph)	62	629	0	701	412	368	62
Future Volume (vph)	62	629	0	701	412	368	62
Ideal Flow (vphpl)	1900	1900	1900	1900	1900	1900	1900
Grade (%)		-9%		5%		-9%	
Storage Length (ft)	500		350		0	0	400
Storage Lanes	1		1		1	2	1
Taper Length (ft)	25		25			25	
Lane Util. Factor	1.00	1.00	1.00	1.00	1.00	0.97	1.00
Frt					0.850		0.850
Flt Protected	0.950					0.950	
Satd. Flow (prot)	1715	1805	1715	1715	1458	3485	1607
Flt Permitted	0.950					0.950	
Satd. Flow (perm)	1715	1805	1715	1715	1458	3485	1607
Right Turn on Red					No		No
Satd. Flow (RTOR)							
Link Speed (mph)		35		35		45	
Link Distance (ft)		1579		1808		1089	
Travel Time (s)		30.8		35.2		16.5	
Peak Hour Factor	0.90	0.90	0.90	0.90	0.90	0.90	0.90
Heavy Vehicles (%)	10%	10%	8%	8%	8%	5%	5%
Adj. Flow (vph)	69	699	0	779	458	409	69
Shared Lane Traffic (%)							
Lane Group Flow (vph)	69	699	0	779	458	409	69
Enter Blocked Intersection	No	No	No	No	No	No	No
Lane Alignment	Left	Left	R NA	Left	Right	Left	Right
Median Width(ft)		12		12		24	
Link Offset(ft)		0		0		0	
Crosswalk Width(ft)		16		16		16	
Two way Left Turn Lane							
Headway Factor	0.94	0.94	1.03	1.03	1.03	0.94	0.94
Turning Speed (mph)	15		9		9	15	9
Number of Detectors	1	2	1	2	1	1	1
Detector Template	Left	Thru	Left	Thru	Right	Left	Right
Leading Detector (ft)	20	100	20	100	20	20	20
Trailing Detector (ft)	0	0	0	0	0	0	0
Detector 1 Position(ft)	0	0	0	0	0	0	0
Detector 1 Size(ft)	20	6	20	6	20	20	20
Detector 1 Type	Cl+Ex	Cl+Ex	Cl+Ex	Cl+Ex	Cl+Ex	Cl+Ex	Cl+Ex
Detector 1 Channel							
Detector 1 Extend (s)	0.0	0.0	0.0	0.0	0.0	0.0	0.0
Detector 1 Queue (s)	0.0	0.0	0.0	0.0	0.0	0.0	0.0
Detector 1 Delay (s)	0.0	0.0	0.0	0.0	0.0	0.0	0.0
Detector 2 Position(ft)		94		94			
Detector 2 Size(ft)		6		6			
Detector 2 Type		Cl+Ex		Cl+Ex			
Detector 2 Channel							
Detector 2 Extend (s)		0.0		0.0			
Turn Type	Prot	NA	Prot	NA	pm+ov	Prot	pm+ov

DocuSign Envelope ID: 5C03745C-4B01-4834-A65D-B77F558A4F46

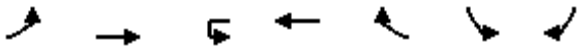

Lane Group	EBL	EBT	WBU	WBT	WBR	SBL	SBR
Protected Phases	5	2	1	6	4	4	5
Permitted Phases					6		4
Detector Phase	5	2	1	6	4	4	5
Switch Phase							
Minimum Initial (s)	7.0	10.0	7.0	10.0	7.0	7.0	7.0
Minimum Split (s)	13.7	17.3	13.3	17.3	13.8	13.8	13.7
Total Split (s)	18.0	112.0	14.0	108.0	34.0	34.0	18.0
Total Split (%)	11.3%	70.0%	8.8%	67.5%	21.3%	21.3%	11.3%
Maximum Green (s)	11.3	104.7	7.7	100.7	27.2	27.2	11.3
Yellow Time (s)	3.3	4.6	3.0	4.6	3.3	3.3	3.3
All-Red Time (s)	3.4	2.7	3.3	2.7	3.5	3.5	3.4
Lost Time Adjust (s)	-1.7	-2.3	-1.3	-2.3	-2.3	-1.8	-1.8
Total Lost Time (s)	5.0	5.0	5.0	5.0	4.5	5.0	4.9
Lead/Lag	Lead	Lead	Lag	Lag			Lead
Lead-Lag Optimize?	Yes	Yes	Yes	Yes			Yes
Vehicle Extension (s)	2.0	3.0	2.0	3.0	3.0	3.0	2.0
Recall Mode	None	C-Max	None	C-Max	None	None	None
Act Effct Green (s)	11.6	124.2		107.6	138.9	25.8	42.5
Actuated g/C Ratio	0.07	0.78		0.67	0.87	0.16	0.27
v/c Ratio	0.56	0.50		0.68	0.36	0.73	0.16
Control Delay	88.6	8.3		11.3	1.9	71.6	44.6
Queue Delay	0.0	0.0		0.0	0.0	0.0	0.0
Total Delay	88.6	8.3		11.3	1.9	71.6	44.6
LOS	F	A		B	A	E	D
Approach Delay		15.5		7.8		67.7	
Approach LOS		B		A		E	
Queue Length 50th (ft)	71	242		270	28	211	55
Queue Length 95th (ft)	128	341		336	78	267	97
Internal Link Dist (ft)		1499		1728		1009	
Turn Bay Length (ft)	500						400
Base Capacity (vph)	139	1401		1153	1294	631	441
Starvation Cap Reductn	0	0		0	0	0	0
Spillback Cap Reductn	0	0		0	0	0	0
Storage Cap Reductn	0	0		0	0	0	0
Reduced v/c Ratio	0.50	0.50		0.68	0.35	0.65	0.16

Intersection Summary			
Area Type:	Other		
Cycle Length: 160			
Actuated Cycle Length: 160			
Offset: 15 (9%), Referenced to phase 2:EBT and 6:WBT, Start of Green			
Natural Cycle: 75			
Control Type: Actuated-Coordinated			
Maximum v/c Ratio: 0.73			
Intersection Signal Delay: 21.7		Intersection LOS: C	
Intersection Capacity Utilization 65.7%		ICU Level of Service C	
Analysis Period (min) 15			

DocuSign Envelope ID: 5C03745C-4B01-4834-A65D-B77F558A4F46

Splits and Phases: 8: NC 146 (Long Shoals Rd) & Clayton Rd

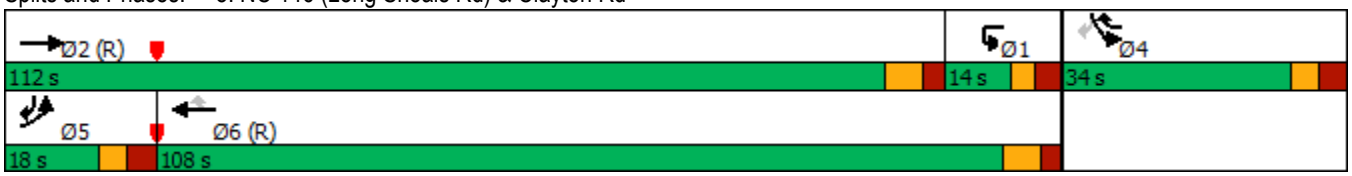

DocuSign Envelope ID: 5C03745C-4B01-4834-A65D-B77F558A4F46



Lane Group	EBU	EBT	EBR	WBL	WBT	NBL	NBR
Lane Configurations							
Traffic Volume (vph)	0	1001	46	488	943	28	280
Future Volume (vph)	0	1001	46	488	943	28	280
Ideal Flow (vphpl)	1900	1900	1900	1900	1900	1900	1900
Storage Length (ft)	325		0	325		200	0
Storage Lanes	1		0	1		1	1
Taper Length (ft)	25			25		25	
Lane Util. Factor	1.00	0.95	0.95	1.00	0.95	1.00	1.00
Frt		0.993					0.850
Flt Protected				0.950		0.950	
Satd. Flow (prot)	1759	3319	0	1671	3343	1752	1568
Flt Permitted				0.950		0.950	
Satd. Flow (perm)	1759	3319	0	1671	3343	1752	1568
Link Speed (mph)		45			45	35	
Link Distance (ft)		1808			1000	1062	
Travel Time (s)		27.4			15.2	20.7	
Peak Hour Factor	0.90	0.90	0.90	0.90	0.90	0.90	0.90
Heavy Vehicles (%)	8%	8%	8%	8%	8%	3%	3%
Adj. Flow (vph)	0	1112	51	542	1048	31	311
Shared Lane Traffic (%)							
Lane Group Flow (vph)	0	1163	0	542	1048	31	311
Enter Blocked Intersection	No	No	No	No	No	No	No
Lane Alignment	Left	Left	Right	Left	Left	Left	Right
Median Width(ft)		15			24	12	
Link Offset(ft)		0			0	0	
Crosswalk Width(ft)		16			16	16	
Two way Left Turn Lane							
Headway Factor	1.00	1.00	1.00	1.00	1.00	1.00	1.00
Turning Speed (mph)	9		9	15		15	9
Sign Control		Free			Free	Stop	

Intersection Summary			
Area Type:	Other		
Control Type: Unsignalized			
Intersection Capacity Utilization 69.5%		ICU Level of Service C	
Analysis Period (min) 15			

DocuSign Envelope ID: 5C03745C-4B01-4834-A65D-B77F558A4F46

Lane Group	EBL	EBT	EBR2	WBL	WBT	SEL	SER2	NWL
Lane Configurations								
Traffic Volume (vph)	265	788	228	629	904	934	298	229
Future Volume (vph)	265	788	228	629	904	934	298	229
Ideal Flow (vphpl)	1900	1900	1900	1900	1900	1900	1900	1900
Grade (%)		3%			-7%			
Storage Length (ft)	475			0		0		0
Storage Lanes	2			2		2		2
Taper Length (ft)	25			25		25		25
Lane Util. Factor	0.97	0.95	1.00	0.97	0.95	0.97	1.00	0.97
Frt			0.850				0.850	
Flt Protected	0.950			0.950		0.950		0.950
Satd. Flow (prot)	3080	3292	1420	3236	3593	3434	1525	3291
Flt Permitted	0.950			0.950		0.950		0.950
Satd. Flow (perm)	3080	3292	1420	3236	3593	3434	1525	3291
Right Turn on Red			Yes				Yes	
Satd. Flow (RTOR)			152				153	
Link Speed (mph)		45			45			
Link Distance (ft)		1000			418			
Travel Time (s)		15.2			6.3			
Peak Hour Factor	0.90	0.90	0.90	0.90	0.90	0.90	0.90	0.90
Heavy Vehicles (%)	12%	8%	12%	12%	4%	4%	8%	8%
Adj. Flow (vph)	294	876	253	699	1004	1038	331	254
Shared Lane Traffic (%)								
Lane Group Flow (vph)	294	876	253	699	1004	1038	331	254
Enter Blocked Intersection	No	No	No	No	No	No	No	No
Lane Alignment	Left	Left	Right	Left	Left	Left	Right	Left
Median Width(ft)		24			24			
Link Offset(ft)		0			0			
Crosswalk Width(ft)		16			16			
Two way Left Turn Lane								
Headway Factor	1.02	1.02	1.02	0.96	0.96	0.97	0.97	0.98
Turning Speed (mph)	15		9	15		15	9	15
Number of Detectors	1	2	1	1	2	1	1	1
Detector Template	Left	Thru	Right	Left	Thru	Left	Right	Left
Leading Detector (ft)	20	100	20	20	100	20	20	20
Trailing Detector (ft)	0	0	0	0	0	0	0	0
Detector 1 Position(ft)	0	0	0	0	0	0	0	0
Detector 1 Size(ft)	20	6	20	20	6	20	20	20
Detector 1 Type	Cl+Ex	Cl+Ex	Cl+Ex	Cl+Ex	Cl+Ex	Cl+Ex	Cl+Ex	Cl+Ex
Detector 1 Channel								
Detector 1 Extend (s)	0.0	0.0	0.0	0.0	0.0	0.0	0.0	0.0
Detector 1 Queue (s)	0.0	0.0	0.0	0.0	0.0	0.0	0.0	0.0
Detector 1 Delay (s)	0.0	0.0	0.0	0.0	0.0	0.0	0.0	0.0
Detector 2 Position(ft)		94			94			
Detector 2 Size(ft)		6			6			
Detector 2 Type		Cl+Ex			Cl+Ex			
Detector 2 Channel								
Detector 2 Extend (s)		0.0			0.0			
Turn Type	Prot	NA	Free	Prot	NA	Prot	Free	Prot

DocuSign Envelope ID: 5C03745C-4B01-4834-A65D-B77F558A4F46



Lane Group	EBL	EBT	EBR2	WBL	WBT	SEL	SER2	NWL
Protected Phases	5	2		1	6	4		8
Permitted Phases			Free				Free	
Detector Phase	5	2		1	6	4		8
Switch Phase								
Minimum Initial (s)	7.0	12.0		7.0	12.0	7.0		7.0
Minimum Split (s)	15.3	21.0		14.5	21.0	15.0		15.0
Total Split (s)	28.0	81.0		36.0	89.0	43.0		43.0
Total Split (%)	17.5%	50.6%		22.5%	55.6%	26.9%		26.9%
Maximum Green (s)	19.7	72.0		28.5	80.0	35.0		35.0
Yellow Time (s)	3.1	5.2		3.6	5.2	3.5		3.5
All-Red Time (s)	5.2	3.8		3.9	3.8	4.5		4.5
Lost Time Adjust (s)	-3.3	-4.0		-2.5	-4.0	-3.0		-3.0
Total Lost Time (s)	5.0	5.0		5.0	5.0	5.0		5.0
Lead/Lag	Lag	Lead		Lag	Lead			
Lead-Lag Optimize?	Yes	Yes		Yes	Yes			
Vehicle Extension (s)	2.0	6.0		2.0	6.0	2.0		2.0
Minimum Gap (s)	0.2	3.0		0.2	3.0	0.2		0.2
Time Before Reduce (s)	0.0	15.0		0.0	15.0	0.0		0.0
Time To Reduce (s)	0.0	30.0		0.0	30.0	0.0		0.0
Recall Mode	None	C-Max		None	C-Max	None		None
Act Effct Green (s)	23.0	76.0	160.0	31.0	84.0	38.0	160.0	38.0
Actuated g/C Ratio	0.14	0.48	1.00	0.19	0.52	0.24	1.00	0.24
v/c Ratio	0.67	0.56	0.18	1.12	0.53	1.27	0.22	0.33
Control Delay	73.6	23.2	0.3	124.9	15.7	180.4	0.3	51.8
Queue Delay	0.0	1.1	0.0	0.3	0.9	5.3	0.0	0.0
Total Delay	73.6	24.3	0.3	125.2	16.6	185.7	0.3	51.8
LOS	E	C	A	F	B	F	A	D
Approach Delay		30.2			61.2			
Approach LOS		C			E			
Queue Length 50th (ft)	157	337	0	~439	231	~704	0	114
Queue Length 95th (ft)	210	375	0	#571	290	#840	0	157
Internal Link Dist (ft)		920			338			
Turn Bay Length (ft)	475							
Base Capacity (vph)	442	1563	1420	626	1886	815	1525	781
Starvation Cap Reductn	0	0	0	23	564	0	0	0
Spillback Cap Reductn	0	425	0	0	0	413	0	0
Storage Cap Reductn	0	0	0	0	0	0	0	0
Reduced v/c Ratio	0.67	0.77	0.18	1.16	0.76	2.58	0.22	0.33

Intersection Summary			
Area Type:	Other		
Cycle Length: 160			
Actuated Cycle Length: 160			
Offset: 0 (0%), Referenced to phase 2:EBT and 6:WBT, Start of Green, Master Intersection			
Natural Cycle: 150			
Control Type: Actuated-Coordinated			
Maximum v/c Ratio: 1.27			
Intersection Signal Delay: 74.4		Intersection LOS: E	
Intersection Capacity Utilization 78.9%		ICU Level of Service D	

DocuSign Envelope ID: 5C03745C-4B01-4834-A65D-B77F558A4F46

Analysis Period (min) 15

~ Volume exceeds capacity, queue is theoretically infinite.
Queue shown is maximum after two cycles.

95th percentile volume exceeds capacity, queue may be longer.
Queue shown is maximum after two cycles.

Splits and Phases: 10: I-26 Ramp & NC 146 (Long Shoals Rd)

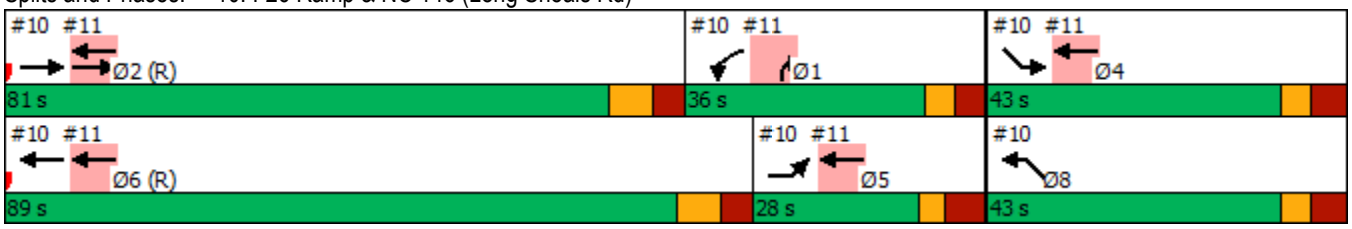

DocuSign Envelope ID: 5C03745C-4B01-4834-A65D-B77F558A4F46

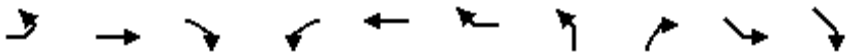

Lane Group	EBL	EBT	EBR	WBL	WBT	WBR	NBL	NBR	SEL	SER	Ø4	Ø5
Lane Configurations		↑↑			↑↑	↱		↱↱				
Traffic Volume (vph)	0	1722	0	0	1533	954	0	550	0	0		
Future Volume (vph)	0	1722	0	0	1533	954	0	550	0	0		
Ideal Flow (vphpl)	1900	1900	1900	1900	1900	1900	1900	1900	1900	1900		
Storage Length (ft)	0		0	0		275	0	0	0	0		
Storage Lanes	0		0	0		1	0	2	0	0		
Taper Length (ft)	25			25			25		25			
Lane Util. Factor	1.00	0.95	1.00	1.00	0.95	1.00	1.00	0.88	1.00	1.00		
Frt						0.850		0.850				
Flt Protected												
Satd. Flow (prot)	0	3471	0	0	3471	1442	0	2733	0	0		
Flt Permitted												
Satd. Flow (perm)	0	3471	0	0	3471	1442	0	2733	0	0		
Right Turn on Red			No			No		No				
Satd. Flow (RTOR)												
Link Speed (mph)		45			45		45		45			
Link Distance (ft)		418			593		396		464			
Travel Time (s)		6.3			9.0		6.0		7.0			
Peak Hour Factor	0.90	0.90	0.90	0.90	0.90	0.90	0.90	0.90	0.90	0.90		
Heavy Vehicles (%)	2%	4%	2%	2%	4%	12%	2%	4%	2%	2%		
Adj. Flow (vph)	0	1913	0	0	1703	1060	0	611	0	0		
Shared Lane Traffic (%)												
Lane Group Flow (vph)	0	1913	0	0	1703	1060	0	611	0	0		
Enter Blocked Intersection	No	No	No	No	No	No	No	No	No	No		
Lane Alignment	Left	L NA	Right	Left	Right	Right	Left	R NA	Left	Right		
Median Width(ft)		0			24		0		0			
Link Offset(ft)		0			0		0		0			
Crosswalk Width(ft)		16			16		16		16			
Two way Left Turn Lane												
Headway Factor	1.00	1.00	1.00	1.00	1.00	1.00	1.00	1.00	1.00	1.00		
Turning Speed (mph)	15		9	15		9	15	9	15	9		
Number of Detectors		2			2	1		1				
Detector Template		Thru			Thru	Right		Right				
Leading Detector (ft)		100			100	20		20				
Trailing Detector (ft)		0			0	0		0				
Detector 1 Position(ft)		0			0	0		0				
Detector 1 Size(ft)		6			6	20		20				
Detector 1 Type		Cl+Ex			Cl+Ex	Cl+Ex		Cl+Ex				
Detector 1 Channel												
Detector 1 Extend (s)		0.0			0.0	0.0		0.0				
Detector 1 Queue (s)		0.0			0.0	0.0		0.0				
Detector 1 Delay (s)		0.0			0.0	0.0		0.0				
Detector 2 Position(ft)		94			94							
Detector 2 Size(ft)		6			6							
Detector 2 Type		Cl+Ex			Cl+Ex							
Detector 2 Channel												
Detector 2 Extend (s)		0.0			0.0							
Turn Type		NA			NA	Free		Prot				
Protected Phases		2			2 4 5 6			1			4	5

DocuSign Envelope ID: 5C03745C-4B01-4834-A65D-B77F558A4F46

Lane Group	Ø6	Ø8
Lane Configurations		
Traffic Volume (vph)		
Future Volume (vph)		
Ideal Flow (vphpl)		
Storage Length (ft)		
Storage Lanes		
Taper Length (ft)		
Lane Util. Factor		
Frt		
Flt Protected		
Satd. Flow (prot)		
Flt Permitted		
Satd. Flow (perm)		
Right Turn on Red		
Satd. Flow (RTOR)		
Link Speed (mph)		
Link Distance (ft)		
Travel Time (s)		
Peak Hour Factor		
Heavy Vehicles (%)		
Adj. Flow (vph)		
Shared Lane Traffic (%)		
Lane Group Flow (vph)		
Enter Blocked Intersection		
Lane Alignment		
Median Width(ft)		
Link Offset(ft)		
Crosswalk Width(ft)		
Two way Left Turn Lane		
Headway Factor		
Turning Speed (mph)		
Number of Detectors		
Detector Template		
Leading Detector (ft)		
Trailing Detector (ft)		
Detector 1 Position(ft)		
Detector 1 Size(ft)		
Detector 1 Type		
Detector 1 Channel		
Detector 1 Extend (s)		
Detector 1 Queue (s)		
Detector 1 Delay (s)		
Detector 2 Position(ft)		
Detector 2 Size(ft)		
Detector 2 Type		
Detector 2 Channel		
Detector 2 Extend (s)		
Turn Type		
Protected Phases	6	8

DocuSign Envelope ID: 5C03745C-4B01-4834-A65D-B77F558A4F46

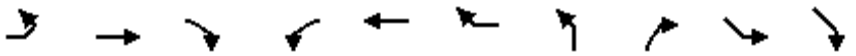

Lane Group	EBL	EBT	EBR	WBL	WBT	WBR	NBL	NBR	SEL	SER	Ø4	Ø5
Permitted Phases						Free						
Detector Phase		2			2 4 5 6			1				
Switch Phase												
Minimum Initial (s)		12.0						7.0			7.0	7.0
Minimum Split (s)		21.0						14.5			15.0	15.3
Total Split (s)		81.0						36.0			43.0	28.0
Total Split (%)		50.6%						22.5%			27%	18%
Maximum Green (s)		72.0						28.5			35.0	19.7
Yellow Time (s)		5.2						3.6			3.5	3.1
All-Red Time (s)		3.8						3.9			4.5	5.2
Lost Time Adjust (s)		0.0						0.0				
Total Lost Time (s)		9.0						7.5				
Lead/Lag		Lead						Lag				Lag
Lead-Lag Optimize?		Yes						Yes				Yes
Vehicle Extension (s)		6.0						2.0			2.0	2.0
Minimum Gap (s)		3.0						0.2			0.2	0.2
Time Before Reduce (s)		15.0						0.0			0.0	0.0
Time To Reduce (s)		30.0						0.0			0.0	0.0
Recall Mode		C-Max						None			None	None
Act Effct Green (s)		72.0			160.0	160.0		28.5				
Actuated g/C Ratio		0.45			1.00	1.00		0.18				
v/c Ratio		1.23			0.49	0.74		1.26				
Control Delay		135.6			0.0	6.3		182.9				
Queue Delay		0.1			0.1	0.0		0.6				
Total Delay		135.8			0.1	6.3		183.5				
LOS		F			A	A		F				
Approach Delay		135.8			2.5		183.5					
Approach LOS		F			A		F					
Queue Length 50th (ft)		~1316			0	750		~452				
Queue Length 95th (ft)		m#1113			m0	m0		#592				
Internal Link Dist (ft)		338			513		316		384			
Turn Bay Length (ft)						275						
Base Capacity (vph)		1561			3471	1442		486				
Starvation Cap Reductn		68			0	0		0				
Spillback Cap Reductn		12			429	0		34				
Storage Cap Reductn		0			0	0		0				
Reduced v/c Ratio		1.28			0.56	0.74		1.35				

Intersection Summary			
Area Type:	Other		
Cycle Length: 160			
Actuated Cycle Length: 160			
Offset: 0 (0%), Referenced to phase 2:EBT and 6:WBT, Start of Green, Master Intersection			
Natural Cycle: 150			
Control Type: Actuated-Coordinated			
Maximum v/c Ratio: 1.27			
Intersection Signal Delay: 71.7		Intersection LOS: E	
Intersection Capacity Utilization 80.6%		ICU Level of Service D	
Analysis Period (min) 15			

DocuSign Envelope ID: 5C03745C-4B01-4834-A65D-B77F558A4F46

Lane Group	Ø6	Ø8
Permitted Phases		
Detector Phase		
Switch Phase		
Minimum Initial (s)	12.0	7.0
Minimum Split (s)	21.0	15.0
Total Split (s)	89.0	43.0
Total Split (%)	56%	27%
Maximum Green (s)	80.0	35.0
Yellow Time (s)	5.2	3.5
All-Red Time (s)	3.8	4.5
Lost Time Adjust (s)		
Total Lost Time (s)		
Lead/Lag	Lead	
Lead-Lag Optimize?	Yes	
Vehicle Extension (s)	6.0	2.0
Minimum Gap (s)	3.0	0.2
Time Before Reduce (s)	15.0	0.0
Time To Reduce (s)	30.0	0.0
Recall Mode	C-Max	None
Act Effct Green (s)		
Actuated g/C Ratio		
v/c Ratio		
Control Delay		
Queue Delay		
Total Delay		
LOS		
Approach Delay		
Approach LOS		
Queue Length 50th (ft)		
Queue Length 95th (ft)		
Internal Link Dist (ft)		
Turn Bay Length (ft)		
Base Capacity (vph)		
Starvation Cap Reductn		
Spillback Cap Reductn		
Storage Cap Reductn		
Reduced v/c Ratio		

Intersection Summary

DocuSign Envelope ID: 5C03745C-4B01-4834-A65D-B77F558A4F46

~ Volume exceeds capacity, queue is theoretically infinite.
Queue shown is maximum after two cycles.
95th percentile volume exceeds capacity, queue may be longer.
Queue shown is maximum after two cycles.
m Volume for 95th percentile queue is metered by upstream signal.

Splits and Phases: 11: I-26 NWB Ramp & NC 146 (Long Shoals Rd)

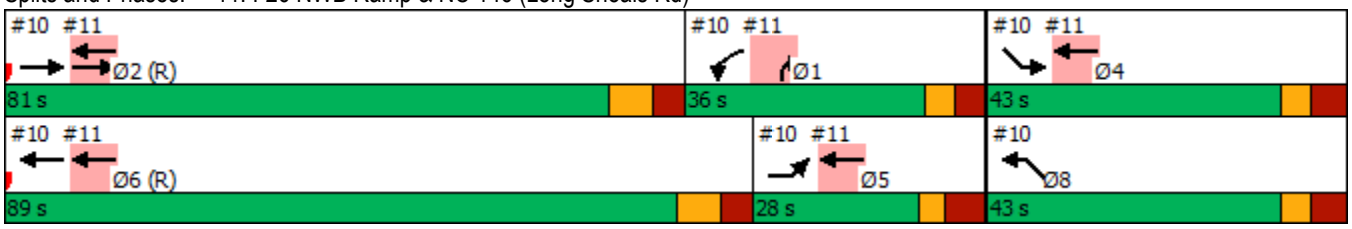

DocuSign Envelope ID: 5C03745C-4B01-4834-A65D-B77F558A4F46

Lane Group	EBL	EBT	EBR	WBL	WBT	WBR	NBL	NBT	NBR	SBL	SBT	SBR
Lane Configurations												
Traffic Volume (vph)	701	1504	67	17	1542	462	84	41	20	509	40	861
Future Volume (vph)	701	1504	67	17	1542	462	84	41	20	509	40	861
Ideal Flow (vphpl)	1900	1900	1900	1900	1900	1900	1900	1900	1900	1900	1900	1900
Grade (%)		6%			-6%			11%			7%	
Storage Length (ft)	350		400	250		225	0		0	450		0
Storage Lanes	2		1	1		1	0		0	1		1
Taper Length (ft)	25			25			25			25		
Lane Util. Factor	0.97	0.95	1.00	1.00	0.95	1.00	1.00	1.00	1.00	0.95	0.95	1.00
Frt			0.850			0.850		0.982				0.850
Flt Protected	0.950			0.950				0.972		0.950	0.959	
Satd. Flow (prot)	3266	3367	1506	1788	3575	1599	0	1632	0	1561	1576	1470
Flt Permitted	0.950			0.950				0.972		0.950	0.959	
Satd. Flow (perm)	3266	3367	1506	1788	3575	1599	0	1632	0	1561	1576	1470
Right Turn on Red			No			No			No			No
Satd. Flow (RTOR)												
Link Speed (mph)		45			45			25			25	
Link Distance (ft)		593			1582			722			992	
Travel Time (s)		9.0			24.0			19.7			27.1	
Peak Hour Factor	0.90	0.90	0.90	0.90	0.90	0.90	0.90	0.90	0.90	0.90	0.90	0.90
Heavy Vehicles (%)	4%	4%	4%	4%	4%	4%	5%	5%	5%	6%	6%	6%
Adj. Flow (vph)	779	1671	74	19	1713	513	93	46	22	566	44	957
Shared Lane Traffic (%)										46%		
Lane Group Flow (vph)	779	1671	74	19	1713	513	0	161	0	306	304	957
Enter Blocked Intersection	No	No	No	No	No	No	No	No	No	No	No	No
Lane Alignment	Left	Left	Right	Left	Left	Right	Left	Left	Right	Left	Left	Right
Median Width(ft)		24			24			0			12	
Link Offset(ft)		0			0			0			0	
Crosswalk Width(ft)		16			16			16			16	
Two way Left Turn Lane												
Headway Factor	1.04	1.04	1.04	0.96	0.96	0.96	1.08	1.08	1.08	1.05	1.05	1.05
Turning Speed (mph)	15		9	15		9	15		9	15		9
Number of Detectors	1	2	1	1	2	1	1	2		1	2	1
Detector Template	Left	Thru	Right	Left	Thru	Right	Left	Thru		Left	Thru	Right
Leading Detector (ft)	20	100	20	20	100	20	20	100		20	100	20
Trailing Detector (ft)	0	0	0	0	0	0	0	0		0	0	0
Detector 1 Position(ft)	0	0	0	0	0	0	0	0		0	0	0
Detector 1 Size(ft)	20	6	20	20	6	20	20	6		20	6	20
Detector 1 Type	Cl+Ex	Cl+Ex	Cl+Ex	Cl+Ex	Cl+Ex	Cl+Ex	Cl+Ex	Cl+Ex		Cl+Ex	Cl+Ex	Cl+Ex
Detector 1 Channel												
Detector 1 Extend (s)	0.0	0.0	0.0	0.0	0.0	0.0	0.0	0.0		0.0	0.0	0.0
Detector 1 Queue (s)	0.0	0.0	0.0	0.0	0.0	0.0	0.0	0.0		0.0	0.0	0.0
Detector 1 Delay (s)	0.0	0.0	0.0	0.0	0.0	0.0	0.0	0.0		0.0	0.0	0.0
Detector 2 Position(ft)		94			94			94			94	
Detector 2 Size(ft)		6			6			6			6	
Detector 2 Type		Cl+Ex			Cl+Ex			Cl+Ex			Cl+Ex	
Detector 2 Channel												
Detector 2 Extend (s)		0.0			0.0			0.0			0.0	
Turn Type	Prot	NA	pm+ov	Prot	NA	pm+ov	Split	NA		Split	NA	pm+ov

DocuSign Envelope ID: 5C03745C-4B01-4834-A65D-B77F558A4F46

Lane Group	EBL	EBT	EBR	WBL	WBT	WBR	NBL	NBT	NBR	SBL	SBT	SBR
Protected Phases	5	2	4	1	6	3	4	4		3	3	5
Permitted Phases			2			6						3
Detector Phase	5	2	4	1	6	3	4	4		3	3	5
Switch Phase												
Minimum Initial (s)	7.0	12.0	7.0	7.0	12.0	7.0	7.0	7.0		7.0	7.0	7.0
Minimum Split (s)	13.3	20.7	39.3	13.3	32.6	13.4	39.3	39.3		13.4	13.4	13.3
Total Split (s)	49.0	99.0	18.0	14.0	64.0	29.0	18.0	18.0		29.0	29.0	49.0
Total Split (%)	30.6%	61.9%	11.3%	8.8%	40.0%	18.1%	11.3%	11.3%		18.1%	18.1%	30.6%
Maximum Green (s)	42.7	93.3	11.7	7.7	57.4	22.6	11.7	11.7		22.6	22.6	42.7
Yellow Time (s)	3.0	4.1	3.0	3.1	5.1	3.0	3.0	3.0		3.0	3.0	3.0
All-Red Time (s)	3.3	1.6	3.3	3.2	1.5	3.4	3.3	3.3		3.4	3.4	3.3
Lost Time Adjust (s)	-1.3	-0.7	-1.3	-1.3	-1.6	-1.4		-1.3		-1.4	-1.4	-1.3
Total Lost Time (s)	5.0	5.0	5.0	5.0	5.0	5.0		5.0		5.0	5.0	5.0
Lead/Lag	Lag	Lead	Lead	Lag	Lead	Lag	Lead	Lead		Lag	Lag	Lag
Lead-Lag Optimize?	Yes	Yes	Yes	Yes	Yes	Yes	Yes	Yes		Yes	Yes	Yes
Vehicle Extension (s)	3.0	6.0	3.0	2.0	6.0	3.0	3.0	3.0		3.0	3.0	3.0
Minimum Gap (s)	0.2	3.0	0.2	0.2	3.0	0.2	0.2	0.2		0.2	0.2	0.2
Time Before Reduce (s)	0.0	20.0	0.0	0.0	20.0	0.0	0.0	0.0		0.0	0.0	0.0
Time To Reduce (s)	0.0	30.0	0.0	0.0	30.0	0.0	0.0	0.0		0.0	0.0	0.0
Recall Mode	None	C-Max	None	None	C-Max	None	None	None		None	None	None
Walk Time (s)		7.0	7.0		7.0		7.0	7.0				
Flash Dont Walk (s)		8.0	26.0		19.0		26.0	26.0				
Pedestrian Calls (#/hr)		0	0		0		0	0				
Act Effct Green (s)	44.0	99.6	114.6	8.7	59.0	88.0		13.0		24.0	24.0	68.0
Actuated g/C Ratio	0.28	0.62	0.72	0.05	0.37	0.55		0.08		0.15	0.15	0.42
v/c Ratio	0.87	0.80	0.07	0.20	1.30	0.58		1.22		1.31	1.29	1.53
Control Delay	44.7	12.5	2.2	77.1	181.1	27.2		206.4		216.0	208.7	275.0
Queue Delay	0.0	3.9	0.0	0.0	0.0	0.0		0.0		0.0	0.0	0.0
Total Delay	44.7	16.4	2.2	77.1	181.1	27.2		206.4		216.0	208.7	275.0
LOS	D	B	A	E	F	C		F		F	F	F
Approach Delay		24.7			145.0			206.4			250.6	
Approach LOS		C			F			F			F	
Queue Length 50th (ft)	431	247	5	19	~1202	347		~205		~430	~424	~1243
Queue Length 95th (ft)	m310	m200	m4	50	#1337	466		#364		#641	#633	#1659
Internal Link Dist (ft)		513			1502			642			912	
Turn Bay Length (ft)	350		400	250		225				450		
Base Capacity (vph)	898	2096	1078	100	1318	879		132		234	236	624
Starvation Cap Reductn	0	340	0	0	0	0		0		0	0	0
Spillback Cap Reductn	0	0	0	0	0	0		0		0	0	0
Storage Cap Reductn	0	0	0	0	0	0		0		0	0	0
Reduced v/c Ratio	0.87	0.95	0.07	0.19	1.30	0.58		1.22		1.31	1.29	1.53

Intersection Summary	
Area Type:	Other
Cycle Length: 160	
Actuated Cycle Length: 160	
Offset: 146 (91%), Referenced to phase 2:EBT and 6:WBT, Start of Green	
Natural Cycle: 150	
Control Type: Actuated-Coordinated	

DocuSign Envelope ID: 5C03745C-4B01-4834-A65D-B77F558A4F46

Maximum v/c Ratio: 1.53	
Intersection Signal Delay: 125.3	Intersection LOS: F
Intersection Capacity Utilization 116.5%	ICU Level of Service H
Analysis Period (min) 15	

~ Volume exceeds capacity, queue is theoretically infinite.
Queue shown is maximum after two cycles.

95th percentile volume exceeds capacity, queue may be longer.
Queue shown is maximum after two cycles.

m Volume for 95th percentile queue is metered by upstream signal.

Splits and Phases: 12: Skyland Inn Dr/Schenck Pkwy & NC 146 (Long Shoals Rd)

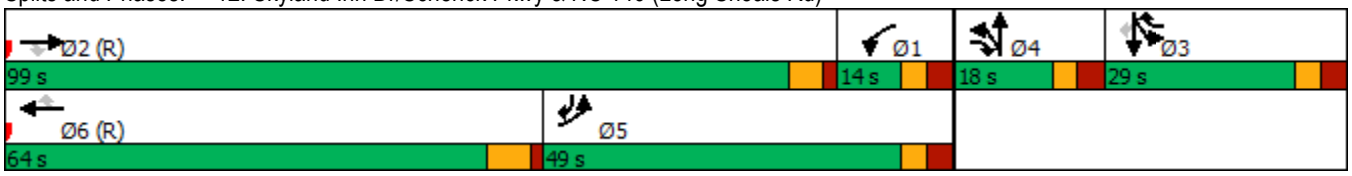

DocuSign Envelope ID: 5C03745C-4B01-4834-A65D-B77F558A4F46

Lane Group	EBL	EBT	EBR	WBL	WBT	WBR	NBL	NBT	NBR	SBL	SBT	SBR
Lane Configurations												
Traffic Volume (vph)	98	327	63	145	402	258	120	40	226	394	39	183
Future Volume (vph)	98	327	63	145	402	258	120	40	226	394	39	183
Ideal Flow (vphpl)	1900	1900	1900	1900	1900	1900	1900	1900	1900	1900	1900	1900
Storage Length (ft)	0		200	0		200	0		200	0		200
Storage Lanes	0		1	0		1	0		1	0		1
Taper Length (ft)	25			25			25			25		
Lane Util. Factor	1.00	1.00	1.00	1.00	1.00	1.00	1.00	1.00	1.00	1.00	1.00	1.00
Frt			0.850			0.850			0.850			0.850
Flt Protected		0.989			0.987			0.964			0.956	
Satd. Flow (prot)	0	1790	1538	0	1786	1538	0	1778	1568	0	1747	1553
Flt Permitted		0.989			0.987			0.964			0.956	
Satd. Flow (perm)	0	1790	1538	0	1786	1538	0	1778	1568	0	1747	1553
Link Speed (mph)		35			35			35			35	
Link Distance (ft)		3089			1607			1072			1051	
Travel Time (s)		60.2			31.3			20.9			20.5	
Peak Hour Factor	0.90	0.90	0.90	0.90	0.90	0.90	0.90	0.90	0.90	0.90	0.90	0.90
Heavy Vehicles (%)	5%	5%	5%	5%	5%	5%	3%	3%	3%	4%	4%	4%
Adj. Flow (vph)	109	363	70	161	447	287	133	44	251	438	43	203
Shared Lane Traffic (%)												
Lane Group Flow (vph)	0	472	70	0	608	287	0	177	251	0	481	203
Enter Blocked Intersection	No	No	No	No	No	No	No	No	No	No	No	No
Lane Alignment	Left	Left	Right	Left	Left	Right	Left	Left	Right	Left	Left	Right
Median Width(ft)		12			12			0			0	
Link Offset(ft)		0			0			0			0	
Crosswalk Width(ft)		16			16			16			16	
Two way Left Turn Lane												
Headway Factor	1.00	1.00	1.00	1.00	1.00	1.00	1.00	1.00	1.00	1.00	1.00	1.00
Turning Speed (mph)	15		9	15		9	15		9	15		9
Sign Control		Yield			Yield			Yield			Yield	

Intersection Summary			
Area Type:	Other		
Control Type: Roundabout			
Intersection Capacity Utilization	92.3%	ICU Level of Service	F
Analysis Period (min)	15		

DocuSign Envelope ID: 5C03745C-4B01-4834-A65D-B77F558A4F46



Lane Group	NBL	NBR	SET	SER	NWL	NWT
Lane Configurations						
Traffic Volume (vph)	0	0	0	562	0	379
Future Volume (vph)	0	0	0	562	0	379
Ideal Flow (vphpl)	1900	1900	1900	1900	1900	1900
Lane Util. Factor	1.00	1.00	1.00	*1.00	1.00	0.91
Frt						
Flt Protected						
Satd. Flow (prot)	0	0	0	3393	0	4893
Flt Permitted						
Satd. Flow (perm)	0	0	0	3393	0	4893
Link Speed (mph)	45		45			25
Link Distance (ft)	263		323			131
Travel Time (s)	4.0		4.9			3.6
Peak Hour Factor	0.92	0.92	0.92	0.92	0.92	0.92
Heavy Vehicles (%)	2%	2%	2%	12%	2%	6%
Adj. Flow (vph)	0	0	0	611	0	412
Shared Lane Traffic (%)						
Lane Group Flow (vph)	0	0	0	611	0	412
Enter Blocked Intersection	No	No	No	No	No	No
Lane Alignment	Left	Right	Left	Right	Left	Left
Median Width(ft)	0		8			0
Link Offset(ft)	0		0			0
Crosswalk Width(ft)	16		16			16
Two way Left Turn Lane						
Headway Factor	1.00	1.00	1.00	1.00	1.00	1.00
Turning Speed (mph)	15	9		45	15	
Sign Control	Free		Free			Free

Intersection Summary			
Area Type:	Other		
Control Type: Unsignalized			
Intersection Capacity Utilization 23.0%		ICU Level of Service A	
Analysis Period (min) 15			

* User Entered Value

DocuSign Envelope ID: 5C03745C-4B01-4834-A65D-B77F558A4F46

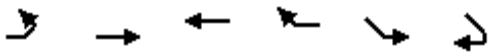

Lane Group	EBL	EBT	WBT	WBR	SEL	SER
Lane Configurations						
Traffic Volume (vph)	0	547	0	391	0	0
Future Volume (vph)	0	547	0	391	0	0
Ideal Flow (vphpl)	1900	1900	1900	1900	1900	1900
Grade (%)		2%	0%		0%	
Lane Util. Factor	1.00	1.00	1.00	*1.00	1.00	1.00
Frt						
Flt Protected						
Satd. Flow (prot)	0	1758	0	3393	0	0
Flt Permitted						
Satd. Flow (perm)	0	1758	0	3393	0	0
Link Speed (mph)		25	45		45	
Link Distance (ft)		718	860		674	
Travel Time (s)		19.6	13.0		10.2	
Peak Hour Factor	0.90	0.90	0.90	0.90	0.90	0.90
Heavy Vehicles (%)	2%	7%	2%	12%	2%	2%
Adj. Flow (vph)	0	608	0	434	0	0
Shared Lane Traffic (%)						
Lane Group Flow (vph)	0	608	0	434	0	0
Enter Blocked Intersection	No	No	No	No	No	No
Lane Alignment	Left	Left	Left	Right	Left	Right
Median Width(ft)		0	12		0	
Link Offset(ft)		0	0		0	
Crosswalk Width(ft)		16	16		16	
Two way Left Turn Lane						
Headway Factor	1.01	1.01	1.00	1.00	1.00	1.00
Turning Speed (mph)	15			45	15	9
Sign Control		Free	Free		Free	

Intersection Summary			
Area Type:	Other		
Control Type: Unsignalized			
Intersection Capacity Utilization 32.1%		ICU Level of Service A	
Analysis Period (min) 15			
* User Entered Value			

DocuSign Envelope ID: 5C03745C-4B01-4834-A65D-B77F558A4F46



Lane Group	EBT	EBR	WBL	WBT	NBL	NBR
Lane Configurations						
Traffic Volume (vph)	0	0	0	954	265	0
Future Volume (vph)	0	0	0	954	265	0
Ideal Flow (vphpl)	1900	1900	1900	1900	1900	1900
Lane Util. Factor	1.00	1.00	1.00	1.00	*1.00	1.00
Frt						
Flt Protected						
Satd. Flow (prot)	0	0	0	1696	3393	0
Flt Permitted						
Satd. Flow (perm)	0	0	0	1696	3393	0
Link Speed (mph)	45			45	45	
Link Distance (ft)	408			464	376	
Travel Time (s)	6.2			7.0	5.7	
Peak Hour Factor	0.90	0.90	0.90	0.90	0.90	0.90
Heavy Vehicles (%)	2%	2%	2%	12%	12%	2%
Adj. Flow (vph)	0	0	0	1060	294	0
Shared Lane Traffic (%)						
Lane Group Flow (vph)	0	0	0	1060	294	0
Enter Blocked Intersection	No	No	No	No	No	No
Lane Alignment	Left	Right	Left	Left	Left	Right
Median Width(ft)	0			0	24	
Link Offset(ft)	0			0	0	
Crosswalk Width(ft)	16			16	16	
Two way Left Turn Lane						
Headway Factor	1.00	1.00	1.00	1.00	1.00	1.00
Turning Speed (mph)		9	15		45	9
Sign Control	Free			Yield	Free	

Intersection Summary			
Area Type:	Other		
Control Type: Unsignalized			
Intersection Capacity Utilization 64.4%		ICU Level of Service C	
Analysis Period (min) 15			

* User Entered Value

DocuSign Envelope ID: 5C03745C-4B01-4834-A65D-B77F558A4F46

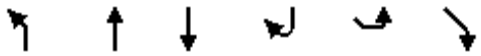

Lane Group	NBL	NBT	SBT	SBR	SEL	SER
Lane Configurations						
Traffic Volume (vph)	229	550	0	0	0	0
Future Volume (vph)	229	550	0	0	0	0
Ideal Flow (vphpl)	1900	1900	1900	1900	1900	1900
Lane Util. Factor	0.91	0.91	1.00	1.00	1.00	1.00
Frt						
Flt Protected	0.950	0.998				
Satd. Flow (prot)	1521	3313	0	0	0	0
Flt Permitted	0.950	0.998				
Satd. Flow (perm)	1521	3313	0	0	0	0
Link Speed (mph)		45	45		45	
Link Distance (ft)		214	396		556	
Travel Time (s)		3.2	6.0		8.4	
Peak Hour Factor	0.90	0.90	0.90	0.90	0.90	0.90
Heavy Vehicles (%)	8%	4%	2%	2%	2%	2%
Adj. Flow (vph)	254	611	0	0	0	0
Shared Lane Traffic (%)	10%					
Lane Group Flow (vph)	229	636	0	0	0	0
Enter Blocked Intersection	No	No	No	No	No	No
Lane Alignment	Right	R NA	Left	Right	Left	Right
Median Width(ft)		12	12		0	
Link Offset(ft)		0	0		0	
Crosswalk Width(ft)		16	16		16	
Two way Left Turn Lane						
Headway Factor	1.00	1.00	1.00	1.00	1.00	1.00
Turning Speed (mph)	45			9	15	9
Sign Control		Free	Free		Free	

Intersection Summary			
Area Type:	Other		
Control Type: Unsignalized			
Intersection Capacity Utilization 18.5%		ICU Level of Service A	
Analysis Period (min) 15			

DocuSign Envelope ID: 5C03745C-4B01-4834-A65D-B77F558A4F46

APPENDIX F

2045 Build Left Entrance/Exit AM HCM

DocuSign Envelope ID: 5C03745C-4B01-4834-A65D-B77F558A4F46

Intersection	
Int Delay, s/veh	0

Movement	EBL	EBT	EBR	WBL	WBT	WBR	NBL	NBT	NBR	SBL	SBT	SBR
Lane Configurations		↑	↱		↰						↑	↱
Traffic Vol, veh/h	0	331	302	1	417	0	0	0	0	0	1	506
Future Vol, veh/h	0	331	302	1	417	0	0	0	0	0	1	506
Conflicting Peds, #/hr	0	0	0	0	0	0	0	0	0	0	0	0
Sign Control	Free	Free	Free	Free	Free	Free	Stop	Stop	Stop	Stop	Stop	Stop
RT Channelized	-	-	Yield	-	-	None	-	-	None	-	-	Yield
Storage Length	-	-	200	-	-	-	-	-	-	-	-	325
Veh in Median Storage, #	-	0	-	-	0	-	-	16974	-	-	0	-
Grade, %	-	0	-	-	0	-	-	0	-	-	0	-
Peak Hour Factor	90	90	90	90	90	90	90	90	90	90	90	90
Heavy Vehicles, %	2	5	12	12	5	2	2	2	2	2	12	5
Mvmt Flow	0	368	336	1	463	0	0	0	0	0	1	562

Major/Minor	Major1			Major2					Minor2		
Conflicting Flow All	-	0	0	368	0	0			-	833	463
Stage 1	-	-	-	-	-	-			-	465	-
Stage 2	-	-	-	-	-	-			-	368	-
Critical Hdwy	-	-	-	4.22	-	-			-	6.62	6.25
Critical Hdwy Stg 1	-	-	-	-	-	-			-	5.62	-
Critical Hdwy Stg 2	-	-	-	-	-	-			-	5.62	-
Follow-up Hdwy	-	-	-	2.308	-	-			-	4.108	3.345
Pot Cap-1 Maneuver	0	-	-	1137	-	0			0	293	593
Stage 1	0	-	-	-	-	0			0	546	-
Stage 2	0	-	-	-	-	0			0	604	-
Platoon blocked, %		-	-		-						
Mov Cap-1 Maneuver	-	-	-	1137	-	-			-	0	593
Mov Cap-2 Maneuver	-	-	-	-	-	-			-	0	-
Stage 1	-	-	-	-	-	-			-	0	-
Stage 2	-	-	-	-	-	-			-	0	-

Approach	EB	WB	SB
HCM Control Delay, s	0	0	
HCM LOS			-

Minor Lane/Major Mvmt	EBT	EBR	WBL	WBT	SBLn1	SBLn2
Capacity (veh/h)	-	-	1137	-	-	593
HCM Lane V/C Ratio	-	-	0.001	-	-	0.948
HCM Control Delay (s)	-	-	8.2	0	-	51.6
HCM Lane LOS	-	-	A	A	-	F
HCM 95th %tile Q(veh)	-	-	0	-	-	12.7

DocuSign Envelope ID: 5C03745C-4B01-4834-A65D-B77F558A4F46

APPENDIX G

2045 Build Left Entrance/Exit PM HCM

DocuSign Envelope ID: 5C03745C-4B01-4834-A65D-B77F558A4F46

Intersection	
Int Delay, s/veh	0

Movement	EBL	EBT	EBR	WBL	WBT	WBR	NBL	NBT	NBR	SBL	SBT	SBR
Lane Configurations		↑	↱		↰						↑	↱
Traffic Vol, veh/h	0	499	459	1	360	0	0	0	0	0	1	435
Future Vol, veh/h	0	499	459	1	360	0	0	0	0	0	1	435
Conflicting Peds, #/hr	0	0	0	0	0	0	0	0	0	0	0	0
Sign Control	Free	Free	Free	Free	Free	Free	Stop	Stop	Stop	Stop	Stop	Stop
RT Channelized	-	-	Yield	-	-	None	-	-	None	-	-	Yield
Storage Length	-	-	200	-	-	-	-	-	-	-	-	325
Veh in Median Storage, #	-	0	-	-	0	-	-	16974	-	-	0	-
Grade, %	-	0	-	-	0	-	-	0	-	-	0	-
Peak Hour Factor	90	90	90	90	90	90	90	90	90	90	90	90
Heavy Vehicles, %	2	5	12	12	5	2	2	2	2	2	12	5
Mvmt Flow	0	554	510	1	400	0	0	0	0	0	1	483

Major/Minor	Major1			Major2					Minor2			
Conflicting Flow All	-	0	0	554	0	0			-	956	400	
Stage 1	-	-	-	-	-	-			-	402	-	
Stage 2	-	-	-	-	-	-			-	554	-	
Critical Hdwy	-	-	-	4.22	-	-			-	6.62	6.25	
Critical Hdwy Stg 1	-	-	-	-	-	-			-	5.62	-	
Critical Hdwy Stg 2	-	-	-	-	-	-			-	5.62	-	
Follow-up Hdwy	-	-	-	2.308	-	-			-	4.108	3.345	
Pot Cap-1 Maneuver	0	-	-	968	-	0			0	248	643	
Stage 1	0	-	-	-	-	0			0	583	-	
Stage 2	0	-	-	-	-	0			0	498	-	
Platoon blocked, %		-	-		-							
Mov Cap-1 Maneuver	-	-	-	968	-	-			-	0	643	
Mov Cap-2 Maneuver	-	-	-	-	-	-			-	0	-	
Stage 1	-	-	-	-	-	-			-	0	-	
Stage 2	-	-	-	-	-	-			-	0	-	

Approach	EB	WB	SB
HCM Control Delay, s	0	0	
HCM LOS			-

Minor Lane/Major Mvmt	EBT	EBR	WBL	WBT	SBLn1	SBLn2
Capacity (veh/h)	-	-	968	-	-	643
HCM Lane V/C Ratio	-	-	0.001	-	-	0.752
HCM Control Delay (s)	-	-	8.7	0	-	25.5
HCM Lane LOS	-	-	A	A	-	D
HCM 95th %tile Q(veh)	-	-	0	-	-	6.8

DocuSign Envelope ID: 5C03745C-4B01-4834-A65D-B77F558A4F46

APPENDIX H

2045 Build DDI (Signalized EB Off-Ramp Terminal) AM SimTraffic Report

DocuSign Envelope ID: 5C03745C-4B01-4834-A65D-B77F558A4F46

SimTraffic Simulation Summary
2045 Build DDI AM

06/09/2022

Summary of All Intervals

Run Number	1	10	2	3	4	5	6
Start Time	6:50	6:50	6:50	6:50	6:50	6:50	6:50
End Time	8:00	8:00	8:00	8:00	8:00	8:00	8:00
Total Time (min)	70	70	70	70	70	70	70
Time Recorded (min)	60	60	60	60	60	60	60
# of Intervals	2	2	2	2	2	2	2
# of Recorded Intervals	1	1	1	1	1	1	1
Vehs Entered	12126	11974	12283	12142	11963	12168	12360
Vehs Exited	12026	11940	12159	12061	11798	11982	12223
Starting Vehs	718	780	679	742	697	655	674
Ending Vehs	818	814	803	823	862	841	811
Travel Distance (mi)	10460	10504	10613	10618	10368	10492	10698
Travel Time (hr)	1648.6	1807.7	1624.2	1830.2	1840.7	1748.8	1572.0
Total Delay (hr)	1353.3	1511.5	1325.4	1531.5	1549.0	1453.5	1270.6
Total Stops	16941	16323	16616	16804	16206	16724	16620
Fuel Used (gal)	664.6	701.1	662.5	709.2	704.4	688.3	653.0

Summary of All Intervals

Run Number	7	8	9	Avg
Start Time	6:50	6:50	6:50	6:50
End Time	8:00	8:00	8:00	8:00
Total Time (min)	70	70	70	70
Time Recorded (min)	60	60	60	60
# of Intervals	2	2	2	2
# of Recorded Intervals	1	1	1	1
Vehs Entered	12300	12374	12468	12213
Vehs Exited	12154	12266	12251	12087
Starting Vehs	702	742	628	698
Ending Vehs	848	850	845	828
Travel Distance (mi)	10613	10680	10733	10578
Travel Time (hr)	1653.9	1731.9	1643.0	1710.1
Total Delay (hr)	1354.4	1430.9	1340.2	1412.0
Total Stops	16458	17059	16720	16645
Fuel Used (gal)	668.5	687.7	669.9	680.9

Interval #0 Information Seeding

Start Time	6:50
End Time	7:00
Total Time (min)	10

Volumes adjusted by Growth Factors.

No data recorded this interval.

DocuSign Envelope ID: 5C03745C-4B01-4834-A65D-B77F558A4F46

Interval #1 Information Recording

Start Time	7:00
End Time	8:00
Total Time (min)	60

Volumes adjusted by Growth Factors.

Run Number	1	10	2	3	4	5	6
Vehs Entered	12126	11974	12283	12142	11963	12168	12360
Vehs Exited	12026	11940	12159	12061	11798	11982	12223
Starting Vehs	718	780	679	742	697	655	674
Ending Vehs	818	814	803	823	862	841	811
Travel Distance (mi)	10460	10504	10613	10618	10368	10492	10698
Travel Time (hr)	1648.6	1807.7	1624.2	1830.2	1840.7	1748.8	1572.0
Total Delay (hr)	1353.3	1511.5	1325.4	1531.5	1549.0	1453.5	1270.6
Total Stops	16941	16323	16616	16804	16206	16724	16620
Fuel Used (gal)	664.6	701.1	662.5	709.2	704.4	688.3	653.0

Interval #1 Information Recording

Start Time	7:00
End Time	8:00
Total Time (min)	60

Volumes adjusted by Growth Factors.

Run Number	7	8	9	Avg
Vehs Entered	12300	12374	12468	12213
Vehs Exited	12154	12266	12251	12087
Starting Vehs	702	742	628	698
Ending Vehs	848	850	845	828
Travel Distance (mi)	10613	10680	10733	10578
Travel Time (hr)	1653.9	1731.9	1643.0	1710.1
Total Delay (hr)	1354.4	1430.9	1340.2	1412.0
Total Stops	16458	17059	16720	16645
Fuel Used (gal)	668.5	687.7	669.9	680.9

DocuSign Envelope ID: 5C03745C-4B01-4834-A65D-B77F558A4F46

Intersection: 1: NC 191 (Brevard Rd) & Commercial Access

Movement	EB	EB	EB	WB	WB	WB	SB	SB
Directions Served	L	T	T	T	T	R	L	R
Maximum Queue (ft)	124	177	162	294	285	174	216	160
Average Queue (ft)	49	88	67	120	132	25	86	56
95th Queue (ft)	101	156	133	231	244	101	168	125
Link Distance (ft)		1574	1574	477	477		1052	
Upstream Blk Time (%)								
Queuing Penalty (veh)								
Storage Bay Dist (ft)	150					175		175
Storage Blk Time (%)	0	0		2	2	0	1	0
Queuing Penalty (veh)	1	0		0	2	0	1	0

Intersection: 2: I-26 SEB Ramps & NC 191 (Brevard Rd)

Movement	EB	EB	EB	WB	WB	WB	NB	NB	NB
Directions Served	T	T	R	L	T	T	L	L	R
Maximum Queue (ft)	298	318	234	224	299	168	215	201	90
Average Queue (ft)	202	197	62	125	71	70	131	111	30
95th Queue (ft)	280	283	173	215	175	124	197	180	70
Link Distance (ft)	477	477			1125	1125	241	241	241
Upstream Blk Time (%)							0	0	
Queuing Penalty (veh)							0	0	
Storage Bay Dist (ft)			225	200					
Storage Blk Time (%)		2	0	2	0				
Queuing Penalty (veh)		4	0	11	0				

Intersection: 3: NC 191 (Brevard Rd) & I-26 NWB Ramps

Movement	EB	EB	EB	EB	WB	WB	WB	SB	SB	SB
Directions Served	L	L	T	T	T	T	R	L	L	R
Maximum Queue (ft)	191	150	141	146	355	321	163	229	230	230
Average Queue (ft)	96	44	45	49	231	192	19	140	134	107
95th Queue (ft)	164	106	114	116	324	295	94	207	207	196
Link Distance (ft)			721	721	1510	1510		771	771	
Upstream Blk Time (%)										
Queuing Penalty (veh)										
Storage Bay Dist (ft)	625	625					200			400
Storage Blk Time (%)						3	0			
Queuing Penalty (veh)						1	0			

DocuSign Envelope ID: 5C03745C-4B01-4834-A65D-B77F558A4F46

Intersection: 4: Blue Ridge Pkwy Access & Frederick Law Olmsted Way

Movement	EB	EB	NB
Directions Served	L	R	L
Maximum Queue (ft)	52	30	30
Average Queue (ft)	22	12	5
95th Queue (ft)	43	34	22
Link Distance (ft)		1031	
Upstream Blk Time (%)			
Queuing Penalty (veh)			
Storage Bay Dist (ft)	75		275
Storage Blk Time (%)	0		
Queuing Penalty (veh)	0		

Intersection: 5: NC 191 (Brevard Rd) & Blue Ridge Pkwy Access/NC 191 Connector

Movement	EB	EB	EB	WB	WB	WB	NB	NB	NB	NB	SB	SB
Directions Served	L	T	TR	L	T	R	L	T	T	R	L	L
Maximum Queue (ft)	82	124	104	128	175	228	189	268	264	175	178	185
Average Queue (ft)	34	61	48	50	68	97	60	171	151	70	105	91
95th Queue (ft)	72	107	91	99	134	184	141	247	238	154	162	162
Link Distance (ft)	166	166	166		1306	1306		1538	1538			
Upstream Blk Time (%)												
Queuing Penalty (veh)												
Storage Bay Dist (ft)				200			175			150	200	200
Storage Blk Time (%)					0		0	7	5	0	0	0
Queuing Penalty (veh)					0		0	4	7	1	0	0

Intersection: 5: NC 191 (Brevard Rd) & Blue Ridge Pkwy Access/NC 191 Connector

Movement	SB	SB
Directions Served	T	TR
Maximum Queue (ft)	186	183
Average Queue (ft)	94	97
95th Queue (ft)	164	167
Link Distance (ft)	1553	1553
Upstream Blk Time (%)		
Queuing Penalty (veh)		
Storage Bay Dist (ft)		
Storage Blk Time (%)	0	
Queuing Penalty (veh)	0	

DocuSign Envelope ID: 5C03745C-4B01-4834-A65D-B77F558A4F46

Intersection: 6: NC 191 Connector & HE-0001 SB Off Ramp

Movement	EB	WB	SB
Directions Served	R	T	R
Maximum Queue (ft)	88	126	238
Average Queue (ft)	9	77	165
95th Queue (ft)	46	123	242
Link Distance (ft)	129	137	229
Upstream Blk Time (%)	0	0	2
Queuing Penalty (veh)	0	1	9
Storage Bay Dist (ft)			
Storage Blk Time (%)			
Queuing Penalty (veh)			

Intersection: 7: NC 191 Connector WB & NC 191 Connector EB

Movement	EB	NB	B1051
Directions Served	T	L	T
Maximum Queue (ft)	80	178	132
Average Queue (ft)	71	144	49
95th Queue (ft)	85	188	133
Link Distance (ft)	70	106	46
Upstream Blk Time (%)	15	35	16
Queuing Penalty (veh)	49	146	66
Storage Bay Dist (ft)			
Storage Blk Time (%)			
Queuing Penalty (veh)			

Intersection: 8: NC 146 (Long Shoals Rd) & Clayton Rd

Movement	EB	EB	WB	WB	SB	SB	SB
Directions Served	L	T	T	R	L	L	R
Maximum Queue (ft)	128	390	183	70	348	320	133
Average Queue (ft)	53	182	61	13	215	184	41
95th Queue (ft)	111	340	147	45	316	283	102
Link Distance (ft)		1540	1733	1733	1042	1042	
Upstream Blk Time (%)							
Queuing Penalty (veh)							
Storage Bay Dist (ft)	500						400
Storage Blk Time (%)							
Queuing Penalty (veh)							

DocuSign Envelope ID: 5C03745C-4B01-4834-A65D-B77F558A4F46

Intersection: 9: Ledbetter Rd & NC 146 (Long Shoals Rd)

Movement	EB	EB	WB	WB	WB	NB	NB
Directions Served	T	TR	L	T	T	L	R
Maximum Queue (ft)	26	54	222	44	40	225	1050
Average Queue (ft)	1	2	94	1	1	142	1007
95th Queue (ft)	18	26	189	43	39	314	1091
Link Distance (ft)	1733	1733		887	887		994
Upstream Blk Time (%)							93
Queuing Penalty (veh)							0
Storage Bay Dist (ft)			325			200	
Storage Blk Time (%)			0	0		0	100
Queuing Penalty (veh)			1	0		0	47

Intersection: 10: I-26 Ramp & NC 146 (Long Shoals Rd)

Movement	EB	EB	EB	EB	EB	WB	WB	WB	WB	SE	SE	SE
Directions Served	L	L	T	T	>	L	L	T	T	L	L	>
Maximum Queue (ft)	313	422	563	517	241	298	244	263	258	253	254	129
Average Queue (ft)	175	125	274	253	141	271	190	171	153	217	219	6
95th Queue (ft)	297	308	488	458	689	293	328	265	259	236	243	63
Link Distance (ft)			887	887	887	244	244	244	244	142	142	142
Upstream Blk Time (%)			0	0	12	71	5	3	2	93	95	
Queuing Penalty (veh)			1	1	58	195	14	9	6	0	0	
Storage Bay Dist (ft)	475	475										
Storage Blk Time (%)		0	3									
Queuing Penalty (veh)		0	6									

Intersection: 10: I-26 Ramp & NC 146 (Long Shoals Rd)

Movement	B1040	B1040	B1040	B1039	B1039	NW	NW
Directions Served	T	T	T	T	T	L	L
Maximum Queue (ft)	521	514	420	538	538	164	158
Average Queue (ft)	487	481	92	506	507	80	75
95th Queue (ft)	507	502	308	524	531	145	138
Link Distance (ft)	410	410	410	487	487	414	414
Upstream Blk Time (%)	96	93		88	81		
Queuing Penalty (veh)	0	0		0	0		
Storage Bay Dist (ft)							
Storage Blk Time (%)							
Queuing Penalty (veh)							

DocuSign Envelope ID: 5C03745C-4B01-4834-A65D-B77F558A4F46

Intersection: 11: I-26 NWB Ramp & NC 146 (Long Shoals Rd)

Movement	EB	EB	WB	WB	WB	NB	NB
Directions Served	T	T	T	T	R	R	R
Maximum Queue (ft)	285	289	526	553	300	299	316
Average Queue (ft)	264	261	477	412	44	284	288
95th Queue (ft)	316	315	631	708	212	293	305
Link Distance (ft)	244	244	500	500		281	281
Upstream Blk Time (%)	12	10	23	7		71	71
Queuing Penalty (veh)	134	117	204	61		283	283
Storage Bay Dist (ft)					275		
Storage Blk Time (%)				3	0		
Queuing Penalty (veh)				20	0		

Intersection: 12: Skyland Inn Dr/Schenck Pkwy & NC 146 (Long Shoals Rd)

Movement	EB	EB	EB	EB	EB	WB	WB	WB	WB	NB	SB	SB
Directions Served	L	L	T	T	R	L	T	T	R	LTR	L	LT
Maximum Queue (ft)	332	330	86	99	19	274	1588	1601	250	441	408	860
Average Queue (ft)	196	209	31	43	1	56	1401	1445	210	260	245	452
95th Queue (ft)	304	315	71	82	9	200	1939	1901	336	478	396	909
Link Distance (ft)			500	500			1546	1546		656		932
Upstream Blk Time (%)							26	61				7
Queuing Penalty (veh)							0	0				0
Storage Bay Dist (ft)	350	350			400	250			225		450	
Storage Blk Time (%)	0	0				0	68	62	4		0	1
Queuing Penalty (veh)	0	1				0	18	242	21		0	2

Intersection: 12: Skyland Inn Dr/Schenck Pkwy & NC 146 (Long Shoals Rd)

Movement	SB
Directions Served	R
Maximum Queue (ft)	948
Average Queue (ft)	603
95th Queue (ft)	1046
Link Distance (ft)	932
Upstream Blk Time (%)	15
Queuing Penalty (veh)	0
Storage Bay Dist (ft)	
Storage Blk Time (%)	
Queuing Penalty (veh)	

DocuSign Envelope ID: 5C03745C-4B01-4834-A65D-B77F558A4F46

Intersection: 100: Biltmore Park West Access/Pratt & Whitney Access & NC 191 Connector

Movement	EB	EB	WB	WB	NB	NB	SB	SB
Directions Served	LT	R	LT	R	LT	R	LT	R
Maximum Queue (ft)	458	225	222	150	91	52	123	24
Average Queue (ft)	194	67	92	11	34	17	48	2
95th Queue (ft)	390	225	172	89	72	50	93	11
Link Distance (ft)	2650		918		878		972	
Upstream Blk Time (%)								
Queuing Penalty (veh)								
Storage Bay Dist (ft)		200		200		200		200
Storage Blk Time (%)	15	0	1	0				
Queuing Penalty (veh)	18	1	3	0				

Intersection: 1028: I-26 SEB Ramps

Movement	NW
Directions Served	T
Maximum Queue (ft)	3
Average Queue (ft)	0
95th Queue (ft)	3
Link Distance (ft)	99
Upstream Blk Time (%)	
Queuing Penalty (veh)	
Storage Bay Dist (ft)	
Storage Blk Time (%)	
Queuing Penalty (veh)	

Intersection: 1033: I-26 NWB Ramps

Movement
Directions Served
Maximum Queue (ft)
Average Queue (ft)
95th Queue (ft)
Link Distance (ft)
Upstream Blk Time (%)
Queuing Penalty (veh)
Storage Bay Dist (ft)
Storage Blk Time (%)
Queuing Penalty (veh)

DocuSign Envelope ID: 5C03745C-4B01-4834-A65D-B77F558A4F46

Intersection: 1041: Bend

Movement	SB
Directions Served	T
Maximum Queue (ft)	146
Average Queue (ft)	6
95th Queue (ft)	95
Link Distance (ft)	466
Upstream Blk Time (%)	0
Queuing Penalty (veh)	0
Storage Bay Dist (ft)	
Storage Blk Time (%)	
Queuing Penalty (veh)	

Intersection: 1043: I-26 Ramp & I-26 NWB Ramp

Movement	WB	NB
Directions Served	T	L
Maximum Queue (ft)	209	32
Average Queue (ft)	63	1
95th Queue (ft)	162	31
Link Distance (ft)	341	221
Upstream Blk Time (%)		
Queuing Penalty (veh)		
Storage Bay Dist (ft)		
Storage Blk Time (%)		
Queuing Penalty (veh)		

Intersection: 1044: I-26 Ramp & I-26 NWB Ramp

Movement	NB	NB	NB	B1045	B1045	B1046
Directions Served	L	LT	T	T	T	T
Maximum Queue (ft)	103	257	188	190	362	541
Average Queue (ft)	8	232	152	14	323	499
95th Queue (ft)	62	248	192	105	362	610
Link Distance (ft)	158	158	158	249	249	487
Upstream Blk Time (%)	0	64	13	0	60	60
Queuing Penalty (veh)	0	0	0	0	0	0
Storage Bay Dist (ft)						
Storage Blk Time (%)						
Queuing Penalty (veh)						

DocuSign Envelope ID: 5C03745C-4B01-4834-A65D-B77F558A4F46

Intersection: 1049: HE-0001 SB On Ramp & NC 191 Connector EB

Movement	EB	EB
Directions Served	L	T
Maximum Queue (ft)	85	6
Average Queue (ft)	41	0
95th Queue (ft)	88	6
Link Distance (ft)	70	70
Upstream Blk Time (%)	3	0
Queuing Penalty (veh)	9	0
Storage Bay Dist (ft)		
Storage Blk Time (%)		
Queuing Penalty (veh)		

Intersection: 1052: NC 191 Connector & HE-0001 SB Off Ramp

Movement	SB
Directions Served	L
Maximum Queue (ft)	2
Average Queue (ft)	0
95th Queue (ft)	2
Link Distance (ft)	238
Upstream Blk Time (%)	
Queuing Penalty (veh)	
Storage Bay Dist (ft)	
Storage Blk Time (%)	
Queuing Penalty (veh)	

Intersection: 1053: HE-0001 SB On Ramp & NC 191 Connector

Movement	WB	B1057
Directions Served	LT	T
Maximum Queue (ft)	142	32
Average Queue (ft)	22	3
95th Queue (ft)	104	47
Link Distance (ft)	149	1194
Upstream Blk Time (%)	2	
Queuing Penalty (veh)	0	
Storage Bay Dist (ft)		
Storage Blk Time (%)		
Queuing Penalty (veh)		

DocuSign Envelope ID: 5C03745C-4B01-4834-A65D-B77F558A4F46

Intersection: 1054: HE-0001 SB Off Ramp

Movement	SB
Directions Served	LT
Maximum Queue (ft)	122
Average Queue (ft)	12
95th Queue (ft)	72
Link Distance (ft)	1212
Upstream Blk Time (%)	
Queuing Penalty (veh)	
Storage Bay Dist (ft)	
Storage Blk Time (%)	
Queuing Penalty (veh)	

Intersection: 1055: HE-0001 SB On Ramp

Movement
Directions Served
Maximum Queue (ft)
Average Queue (ft)
95th Queue (ft)
Link Distance (ft)
Upstream Blk Time (%)
Queuing Penalty (veh)
Storage Bay Dist (ft)
Storage Blk Time (%)
Queuing Penalty (veh)

Network Summary

Network wide Queuing Penalty: 2059

DocuSign Envelope ID: 5C03745C-4B01-4834-A65D-B77F558A4F46

APPENDIX I

2045 Build DDI (Signalized EB Off-Ramp Terminal) PM SimTraffic Report

DocuSign Envelope ID: 5C03745C-4B01-4834-A65D-B77F558A4F46

SimTraffic Simulation Summary
2045 Build DDI PM

06/09/2022

Summary of All Intervals

Run Number	1	10	2	3	4	5	6
Start Time	4:50	4:50	4:50	4:50	4:50	4:50	4:50
End Time	6:00	6:00	6:00	6:00	6:00	6:00	6:00
Total Time (min)	70	70	70	70	70	70	70
Time Recorded (min)	60	60	60	60	60	60	60
# of Intervals	2	2	2	2	2	2	2
# of Recorded Intervals	1	1	1	1	1	1	1
Vehs Entered	13234	12863	13128	12914	12903	13012	13083
Vehs Exited	13104	12884	12984	12911	12785	12910	12923
Starting Vehs	824	867	728	861	808	792	775
Ending Vehs	954	846	872	864	926	894	935
Travel Distance (mi)	11571	11334	11467	11351	11237	11392	11447
Travel Time (hr)	2161.1	2379.2	2234.7	2360.0	2278.9	2148.6	2332.3
Total Delay (hr)	1838.3	2063.1	1915.3	2043.6	1966.3	1830.8	2012.9
Total Stops	18072	17980	18269	17442	18458	17899	17802
Fuel Used (gal)	807.4	848.6	821.4	845.5	824.6	799.4	841.5

Summary of All Intervals

Run Number	7	8	9	Avg
Start Time	4:50	4:50	4:50	4:50
End Time	6:00	6:00	6:00	6:00
Total Time (min)	70	70	70	70
Time Recorded (min)	60	60	60	60
# of Intervals	2	2	2	2
# of Recorded Intervals	1	1	1	1
Vehs Entered	12963	12955	12957	13004
Vehs Exited	12924	12884	12891	12920
Starting Vehs	802	801	812	799
Ending Vehs	841	872	878	883
Travel Distance (mi)	11386	11339	11350	11387
Travel Time (hr)	2191.2	2191.5	2263.3	2254.1
Total Delay (hr)	1873.0	1874.5	1946.3	1936.4
Total Stops	17104	16922	18038	17799
Fuel Used (gal)	807.1	806.3	824.8	822.7

Interval #0 Information Seeding

Start Time	4:50
End Time	5:00
Total Time (min)	10

Volumes adjusted by Growth Factors.

No data recorded this interval.

DocuSign Envelope ID: 5C03745C-4B01-4834-A65D-B77F558A4F46

Interval #1 Information Recording

Start Time	5:00
End Time	6:00
Total Time (min)	60

Volumes adjusted by Growth Factors.

Run Number	1	10	2	3	4	5	6
Vehs Entered	13234	12863	13128	12914	12903	13012	13083
Vehs Exited	13104	12884	12984	12911	12785	12910	12923
Starting Vehs	824	867	728	861	808	792	775
Ending Vehs	954	846	872	864	926	894	935
Travel Distance (mi)	11571	11334	11467	11351	11237	11392	11447
Travel Time (hr)	2161.1	2379.2	2234.7	2360.0	2278.9	2148.6	2332.3
Total Delay (hr)	1838.3	2063.1	1915.3	2043.6	1966.3	1830.8	2012.9
Total Stops	18072	17980	18269	17442	18458	17899	17802
Fuel Used (gal)	807.4	848.6	821.4	845.5	824.6	799.4	841.5

Interval #1 Information Recording

Start Time	5:00
End Time	6:00
Total Time (min)	60

Volumes adjusted by Growth Factors.

Run Number	7	8	9	Avg
Vehs Entered	12963	12955	12957	13004
Vehs Exited	12924	12884	12891	12920
Starting Vehs	802	801	812	799
Ending Vehs	841	872	878	883
Travel Distance (mi)	11386	11339	11350	11387
Travel Time (hr)	2191.2	2191.5	2263.3	2254.1
Total Delay (hr)	1873.0	1874.5	1946.3	1936.4
Total Stops	17104	16922	18038	17799
Fuel Used (gal)	807.1	806.3	824.8	822.7

DocuSign Envelope ID: 5C03745C-4B01-4834-A65D-B77F558A4F46

Intersection: 1: NC 191 (Brevard Rd) & Commercial Access

Movement	EB	EB	EB	WB	WB	WB	SB	SB
Directions Served	L	T	T	T	T	R	L	R
Maximum Queue (ft)	170	271	249	299	325	186	198	178
Average Queue (ft)	82	113	96	140	154	38	82	51
95th Queue (ft)	151	232	211	261	279	141	153	116
Link Distance (ft)		1574	1574	477	477		1052	
Upstream Blk Time (%)								
Queuing Penalty (veh)								
Storage Bay Dist (ft)	150					175		175
Storage Blk Time (%)	1	3		5	4	0	1	0
Queuing Penalty (veh)	10	3		0	4	0	1	0

Intersection: 2: I-26 SEB Ramps & NC 191 (Brevard Rd)

Movement	EB	EB	EB	WB	WB	WB	NB	NB	NB
Directions Served	T	T	R	L	T	T	L	L	R
Maximum Queue (ft)	451	444	250	224	362	179	226	208	96
Average Queue (ft)	279	272	132	152	85	66	148	130	37
95th Queue (ft)	410	413	282	242	228	127	209	195	78
Link Distance (ft)	477	477			1125	1125	241	241	241
Upstream Blk Time (%)	0	0					0	0	
Queuing Penalty (veh)	3	4					0	0	
Storage Bay Dist (ft)			225	200					
Storage Blk Time (%)		15	0	4	0				
Queuing Penalty (veh)		35	1	20	0				

Intersection: 3: NC 191 (Brevard Rd) & I-26 NWB Ramps

Movement	EB	EB	EB	EB	WB	WB	WB	SB	SB	SB
Directions Served	L	L	T	T	T	T	R	L	L	R
Maximum Queue (ft)	261	204	171	175	397	355	207	214	213	222
Average Queue (ft)	140	83	61	61	246	202	24	132	126	122
95th Queue (ft)	231	172	139	134	356	319	101	193	191	197
Link Distance (ft)			721	721	1510	1510		771	771	
Upstream Blk Time (%)										
Queuing Penalty (veh)										
Storage Bay Dist (ft)	625	625					200			400
Storage Blk Time (%)						5	0			
Queuing Penalty (veh)						3	0			

DocuSign Envelope ID: 5C03745C-4B01-4834-A65D-B77F558A4F46

Intersection: 4: Blue Ridge Pkwy Access & Frederick Law Olmsted Way

Movement	EB	EB	NB	NB	SB
Directions Served	L	R	L	T	TR
Maximum Queue (ft)	70	28	24	19	5
Average Queue (ft)	31	12	3	2	0
95th Queue (ft)	58	35	17	21	3
Link Distance (ft)		1031		1004	166
Upstream Blk Time (%)					
Queuing Penalty (veh)					
Storage Bay Dist (ft)	75		275		
Storage Blk Time (%)	0				
Queuing Penalty (veh)	0				

Intersection: 5: NC 191 (Brevard Rd) & Blue Ridge Pkwy Access/NC 191 Connector

Movement	EB	EB	EB	WB	WB	WB	NB	NB	NB	NB	SB	SB
Directions Served	L	T	TR	L	T	R	L	T	T	R	L	L
Maximum Queue (ft)	170	156	162	210	235	485	200	418	394	175	165	176
Average Queue (ft)	92	89	88	89	103	248	73	261	238	72	89	73
95th Queue (ft)	158	145	146	165	189	414	181	371	354	179	141	137
Link Distance (ft)	166	166	166		1306	1306		1538	1538			
Upstream Blk Time (%)	1	0	1									
Queuing Penalty (veh)	2	0	1									
Storage Bay Dist (ft)				200			175			150	200	200
Storage Blk Time (%)				0	1		0	24	18	0	0	
Queuing Penalty (veh)				1	1		0	14	16	0	0	

Intersection: 5: NC 191 (Brevard Rd) & Blue Ridge Pkwy Access/NC 191 Connector

Movement	SB	SB
Directions Served	T	TR
Maximum Queue (ft)	217	224
Average Queue (ft)	121	119
95th Queue (ft)	193	197
Link Distance (ft)	1553	1553
Upstream Blk Time (%)		
Queuing Penalty (veh)		
Storage Bay Dist (ft)		
Storage Blk Time (%)	0	
Queuing Penalty (veh)	1	

DocuSign Envelope ID: 5C03745C-4B01-4834-A65D-B77F558A4F46

Intersection: 6: NC 191 Connector & HE-0001 SB Off Ramp

Movement	EB	EB	B1038	WB	SB
Directions Served	R	R	T	T	R
Maximum Queue (ft)	183	32	37	111	233
Average Queue (ft)	59	1	2	52	138
95th Queue (ft)	148	22	30	100	216
Link Distance (ft)	129	129	733	137	229
Upstream Blk Time (%)	2			0	0
Queuing Penalty (veh)	8			0	2
Storage Bay Dist (ft)					
Storage Blk Time (%)					
Queuing Penalty (veh)					

Intersection: 7: NC 191 Connector WB & NC 191 Connector EB

Movement	EB	NB	B1051
Directions Served	T	L	T
Maximum Queue (ft)	80	180	119
Average Queue (ft)	75	124	20
95th Queue (ft)	80	183	77
Link Distance (ft)	70	106	46
Upstream Blk Time (%)	30	18	4
Queuing Penalty (veh)	149	65	15
Storage Bay Dist (ft)			
Storage Blk Time (%)			
Queuing Penalty (veh)			

Intersection: 8: NC 146 (Long Shoals Rd) & Clayton Rd

Movement	EB	EB	WB	WB	SB	SB	SB
Directions Served	L	T	T	R	L	L	R
Maximum Queue (ft)	169	318	232	79	297	280	128
Average Queue (ft)	73	144	76	17	183	159	43
95th Queue (ft)	144	274	176	53	266	245	99
Link Distance (ft)		1540	1733	1733	1042	1042	
Upstream Blk Time (%)							
Queuing Penalty (veh)							
Storage Bay Dist (ft)	500						400
Storage Blk Time (%)			0				
Queuing Penalty (veh)			0				

DocuSign Envelope ID: 5C03745C-4B01-4834-A65D-B77F558A4F46

Intersection: 9: Ledbetter Rd & NC 146 (Long Shoals Rd)

Movement	EB	EB	WB	WB	WB	NB	NB
Directions Served	T	TR	L	T	T	L	R
Maximum Queue (ft)	78	110	345	320	93	225	971
Average Queue (ft)	16	18	185	18	4	109	689
95th Queue (ft)	153	161	324	162	78	280	1191
Link Distance (ft)	1733	1733		887	887		994
Upstream Blk Time (%)							25
Queuing Penalty (veh)							0
Storage Bay Dist (ft)			325			200	
Storage Blk Time (%)	1		2	0		0	87
Queuing Penalty (veh)	0		11	0		0	24

Intersection: 10: I-26 Ramp & NC 146 (Long Shoals Rd)

Movement	EB	EB	EB	EB	EB	WB	WB	WB	WB	SE	SE	SE
Directions Served	L	L	T	T	>	L	L	T	T	L	L	>
Maximum Queue (ft)	446	473	629	516	238	296	244	263	227	246	252	162
Average Queue (ft)	306	273	292	232	92	273	201	153	100	219	220	11
95th Queue (ft)	522	548	700	582	537	290	329	255	204	236	241	91
Link Distance (ft)			887	887	887	244	244	244	244	142	142	142
Upstream Blk Time (%)			3	1	8	77	6	2	0	91	94	
Queuing Penalty (veh)			11	4	34	296	23	8	1	0	0	
Storage Bay Dist (ft)	475	475										
Storage Blk Time (%)	7	11	2									
Queuing Penalty (veh)	29	41	6									

Intersection: 10: I-26 Ramp & NC 146 (Long Shoals Rd)

Movement	B1040	B1040	B1040	B1039	B1039	NW	NW
Directions Served	T	T	T	T	T	L	L
Maximum Queue (ft)	522	501	409	540	542	250	226
Average Queue (ft)	488	480	110	506	509	122	87
95th Queue (ft)	507	498	318	535	535	208	175
Link Distance (ft)	410	410	410	487	487	414	414
Upstream Blk Time (%)	95	88		83	74		
Queuing Penalty (veh)	0	0		0	0		
Storage Bay Dist (ft)							
Storage Blk Time (%)							
Queuing Penalty (veh)							

DocuSign Envelope ID: 5C03745C-4B01-4834-A65D-B77F558A4F46

Intersection: 11: I-26 NWB Ramp & NC 146 (Long Shoals Rd)

Movement	EB	EB	WB	WB	WB	NB	NB
Directions Served	T	T	T	T	R	R	R
Maximum Queue (ft)	279	281	523	539	295	299	302
Average Queue (ft)	247	241	508	341	40	276	267
95th Queue (ft)	298	296	523	689	195	315	323
Link Distance (ft)	244	244	500	500		281	281
Upstream Blk Time (%)	6	5	56	15		46	34
Queuing Penalty (veh)	54	44	693	184		127	93
Storage Bay Dist (ft)					275		
Storage Blk Time (%)				4	0		
Queuing Penalty (veh)				33	1		

Intersection: 12: Skyland Inn Dr/Schenck Pkwy & NC 146 (Long Shoals Rd)

Movement	EB	EB	EB	EB	EB	WB	WB	WB	WB	NB	SB	SB
Directions Served	L	L	T	T	R	L	T	T	R	LTR	L	LT
Maximum Queue (ft)	297	303	279	254	36	250	1585	1603	250	692	343	978
Average Queue (ft)	181	191	156	163	5	31	1549	1570	192	558	74	939
95th Queue (ft)	268	281	241	232	21	158	1656	1593	340	837	205	1009
Link Distance (ft)			500	500			1546	1546		656		932
Upstream Blk Time (%)							34	85		56		61
Queuing Penalty (veh)							0	0		0		0
Storage Bay Dist (ft)	350	350			400	250			225		450	
Storage Blk Time (%)	0	0	0			0	83	56	2			0
Queuing Penalty (veh)	0	0	0			0	14	260	16			0

Intersection: 12: Skyland Inn Dr/Schenck Pkwy & NC 146 (Long Shoals Rd)

Movement	SB
Directions Served	R
Maximum Queue (ft)	981
Average Queue (ft)	952
95th Queue (ft)	972
Link Distance (ft)	932
Upstream Blk Time (%)	96
Queuing Penalty (veh)	0
Storage Bay Dist (ft)	
Storage Blk Time (%)	
Queuing Penalty (veh)	

DocuSign Envelope ID: 5C03745C-4B01-4834-A65D-B77F558A4F46

Intersection: 100: Biltmore Park West Access/Pratt & Whitney Access & NC 191 Connector

Movement	EB	EB	WB	WB	NB	NB	SB	SB
Directions Served	LT	R	LT	R	LT	R	LT	R
Maximum Queue (ft)	474	225	218	166	153	99	839	225
Average Queue (ft)	217	53	89	10	56	35	448	166
95th Queue (ft)	492	207	171	85	112	84	895	324
Link Distance (ft)	2650		918		878		972	
Upstream Blk Time (%)							5	
Queuing Penalty (veh)							0	
Storage Bay Dist (ft)		200		200		200		200
Storage Blk Time (%)	18	0	0	0	0	0	62	0
Queuing Penalty (veh)	11	0	1	0	1	0	114	2

Intersection: 1028: I-26 SEB Ramps

Movement	NW
Directions Served	T
Maximum Queue (ft)	8
Average Queue (ft)	0
95th Queue (ft)	6
Link Distance (ft)	99
Upstream Blk Time (%)	
Queuing Penalty (veh)	
Storage Bay Dist (ft)	
Storage Blk Time (%)	
Queuing Penalty (veh)	

Intersection: 1033: I-26 NWB Ramps

Movement
Directions Served
Maximum Queue (ft)
Average Queue (ft)
95th Queue (ft)
Link Distance (ft)
Upstream Blk Time (%)
Queuing Penalty (veh)
Storage Bay Dist (ft)
Storage Blk Time (%)
Queuing Penalty (veh)

DocuSign Envelope ID: 5C03745C-4B01-4834-A65D-B77F558A4F46

Intersection: 1041: Bend

Movement	SB	SB
Directions Served	T	
Maximum Queue (ft)	178	42
Average Queue (ft)	6	1
95th Queue (ft)	91	41
Link Distance (ft)	466	466
Upstream Blk Time (%)	0	
Queuing Penalty (veh)	0	
Storage Bay Dist (ft)		
Storage Blk Time (%)		
Queuing Penalty (veh)		

Intersection: 1043: I-26 Ramp & I-26 NWB Ramp

Movement	WB	NB
Directions Served	T	L
Maximum Queue (ft)	121	59
Average Queue (ft)	19	4
95th Queue (ft)	80	53
Link Distance (ft)	341	221
Upstream Blk Time (%)		0
Queuing Penalty (veh)		0
Storage Bay Dist (ft)		
Storage Blk Time (%)		
Queuing Penalty (veh)		

Intersection: 1044: I-26 Ramp & I-26 NWB Ramp

Movement	NB	NB	NB	B1045	B1045	B1046
Directions Served	L	LT	T	T	T	T
Maximum Queue (ft)	124	251	175	84	290	257
Average Queue (ft)	11	165	105	3	99	39
95th Queue (ft)	71	314	219	43	303	227
Link Distance (ft)	158	158	158	249	249	487
Upstream Blk Time (%)	0	28	4	0	8	1
Queuing Penalty (veh)	0	0	0	0	0	0
Storage Bay Dist (ft)						
Storage Blk Time (%)						
Queuing Penalty (veh)						

DocuSign Envelope ID: 5C03745C-4B01-4834-A65D-B77F558A4F46

Intersection: 1049: HE-0001 SB On Ramp & NC 191 Connector EB

Movement	EB	EB
Directions Served	L	T
Maximum Queue (ft)	103	41
Average Queue (ft)	70	2
95th Queue (ft)	100	19
Link Distance (ft)	70	70
Upstream Blk Time (%)	15	0
Queuing Penalty (veh)	74	0
Storage Bay Dist (ft)		
Storage Blk Time (%)		
Queuing Penalty (veh)		

Intersection: 1052: NC 191 Connector & HE-0001 SB Off Ramp

Movement	EB	SB
Directions Served	T	L
Maximum Queue (ft)	16	2
Average Queue (ft)	1	0
95th Queue (ft)	9	2
Link Distance (ft)	125	238
Upstream Blk Time (%)		
Queuing Penalty (veh)		
Storage Bay Dist (ft)		
Storage Blk Time (%)		
Queuing Penalty (veh)		

Intersection: 1053: HE-0001 SB On Ramp & NC 191 Connector

Movement	WB
Directions Served	LT
Maximum Queue (ft)	47
Average Queue (ft)	2
95th Queue (ft)	21
Link Distance (ft)	149
Upstream Blk Time (%)	
Queuing Penalty (veh)	
Storage Bay Dist (ft)	
Storage Blk Time (%)	
Queuing Penalty (veh)	

DocuSign Envelope ID: 5C03745C-4B01-4834-A65D-B77F558A4F46

Intersection: 1054: HE-0001 SB Off Ramp

Movement	SB
Directions Served	LT
Maximum Queue (ft)	55
Average Queue (ft)	3
95th Queue (ft)	25
Link Distance (ft)	1212
Upstream Blk Time (%)	
Queuing Penalty (veh)	
Storage Bay Dist (ft)	
Storage Blk Time (%)	
Queuing Penalty (veh)	

Intersection: 1055: HE-0001 SB On Ramp

Movement	SB
Directions Served	L
Maximum Queue (ft)	8
Average Queue (ft)	0
95th Queue (ft)	5
Link Distance (ft)	96
Upstream Blk Time (%)	
Queuing Penalty (veh)	
Storage Bay Dist (ft)	
Storage Blk Time (%)	
Queuing Penalty (veh)	

Network Summary

Network wide Queuing Penalty: 2571

DocuSign Envelope ID: 5C03745C-4B01-4834-A65D-B77F558A4F46

APPENDIX J

2045 Build DDI (Signalized EB Off-Ramp Terminal) AM Synchro Report

DocuSign Envelope ID: 5C03745C-4B01-4834-A65D-B77F558A4F46

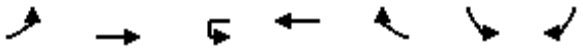

Lane Group	EBL	EBT	WBU	WBT	WBR	SBL	SBR
Lane Configurations							
Traffic Volume (vph)	63	1022	0	1128	90	114	89
Future Volume (vph)	63	1022	0	1128	90	114	89
Ideal Flow (vphpl)	1900	1900	1900	1900	1900	1900	1900
Storage Length (ft)	150		150		175	0	175
Storage Lanes	1		1		1	1	1
Taper Length (ft)	25		25			25	
Lane Util. Factor	1.00	0.95	1.00	0.95	1.00	1.00	1.00
Frt					0.850		0.850
Flt Protected	0.950					0.950	
Satd. Flow (prot)	1703	3406	1792	3406	1524	1703	1524
Flt Permitted	0.950					0.950	
Satd. Flow (perm)	1703	3406	1792	3406	1524	1703	1524
Right Turn on Red					No		No
Satd. Flow (RTOR)							
Link Speed (mph)		45		45		25	
Link Distance (ft)		1606		558		1108	
Travel Time (s)		24.3		8.5		30.2	
Peak Hour Factor	0.90	0.90	0.90	0.90	0.90	0.90	0.90
Heavy Vehicles (%)	6%	6%	6%	6%	6%	6%	6%
Adj. Flow (vph)	70	1136	0	1253	100	127	99
Shared Lane Traffic (%)							
Lane Group Flow (vph)	70	1136	0	1253	100	127	99
Enter Blocked Intersection	No	No	No	No	No	No	No
Lane Alignment	Left	Left	R NA	Left	Right	Left	Right
Median Width(ft)		12		12		12	
Link Offset(ft)		0		0		0	
Crosswalk Width(ft)		16		16		16	
Two way Left Turn Lane							
Headway Factor	1.00	1.00	1.00	1.00	1.00	1.00	1.00
Turning Speed (mph)	15		9		9	15	9
Number of Detectors	1	2	1	2	1	1	1
Detector Template	Left	Thru	Left	Thru	Right	Left	Right
Leading Detector (ft)	20	100	20	100	20	20	20
Trailing Detector (ft)	0	0	0	0	0	0	0
Detector 1 Position(ft)	0	0	0	0	0	0	0
Detector 1 Size(ft)	20	6	20	6	20	20	20
Detector 1 Type	Cl+Ex	Cl+Ex	Cl+Ex	Cl+Ex	Cl+Ex	Cl+Ex	Cl+Ex
Detector 1 Channel							
Detector 1 Extend (s)	0.0	0.0	0.0	0.0	0.0	0.0	0.0
Detector 1 Queue (s)	0.0	0.0	0.0	0.0	0.0	0.0	0.0
Detector 1 Delay (s)	0.0	0.0	0.0	0.0	0.0	0.0	0.0
Detector 2 Position(ft)		94		94			
Detector 2 Size(ft)		6		6			
Detector 2 Type		Cl+Ex		Cl+Ex			
Detector 2 Channel							
Detector 2 Extend (s)		0.0		0.0			
Turn Type	Prot	NA	Prot	NA	pm+ov	Prot	pm+ov
Protected Phases	5	2	1	6	4	4	5

DocuSign Envelope ID: 5C03745C-4B01-4834-A65D-B77F558A4F46

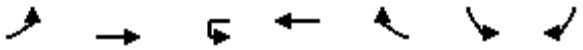

Lane Group	EBL	EBT	WBU	WBT	WBR	SBL	SBR
Permitted Phases					6		4
Detector Phase	5	2	1	6	4	4	5
Switch Phase							
Minimum Initial (s)	7.0	12.0	7.0	12.0	7.0	7.0	7.0
Minimum Split (s)	13.1	18.8	11.9	35.8	36.5	36.5	13.1
Total Split (s)	16.0	71.0	12.0	67.0	37.0	37.0	16.0
Total Split (%)	13.3%	59.2%	10.0%	55.8%	30.8%	30.8%	13.3%
Maximum Green (s)	9.9	64.2	7.1	60.2	30.5	30.5	9.9
Yellow Time (s)	3.0	4.9	3.0	4.9	3.0	3.0	3.0
All-Red Time (s)	3.1	1.9	1.9	1.9	3.5	3.5	3.1
Lost Time Adjust (s)	-1.1	-1.8	0.1	-1.8	-1.8	-1.5	-1.1
Total Lost Time (s)	5.0	5.0	5.0	5.0	4.7	5.0	5.0
Lead/Lag	Lag	Lag	Lead	Lead			Lag
Lead-Lag Optimize?	Yes	Yes	Yes	Yes			Yes
Vehicle Extension (s)	2.0	6.0	2.0	6.0	2.0	2.0	2.0
Minimum Gap (s)	0.2	3.0	0.2	3.0	0.2	0.2	0.2
Time Before Reduce (s)	0.0	15.0	0.0	15.0	0.0	0.0	0.0
Time To Reduce (s)	0.0	30.0	0.0	30.0	0.0	0.0	0.0
Recall Mode	None	C-Max	None	C-Max	None	None	None
Walk Time (s)				7.0	7.0	7.0	
Flash Dont Walk (s)				22.0	23.0	23.0	
Pedestrian Calls (#/hr)				0	0	0	
Act Effct Green (s)	11.0	95.1		79.1	99.3	14.9	30.9
Actuated g/C Ratio	0.09	0.79		0.66	0.83	0.12	0.26
v/c Ratio	0.45	0.42		0.56	0.08	0.60	0.25
Control Delay	61.4	4.8		9.2	1.2	61.1	36.0
Queue Delay	0.0	0.0		0.2	0.0	0.0	0.0
Total Delay	61.4	4.8		9.4	1.2	61.1	36.0
LOS	E	A		A	A	E	D
Approach Delay		8.1		8.8		50.1	
Approach LOS		A		A		D	
Queue Length 50th (ft)	52	117		204	6	94	61
Queue Length 95th (ft)	102	187		320	m11	152	103
Internal Link Dist (ft)		1526		478		1028	
Turn Bay Length (ft)	150				175		175
Base Capacity (vph)	156	2699		2245	1261	454	392
Starvation Cap Reductn	0	0		294	0	0	0
Spillback Cap Reductn	0	66		0	0	0	0
Storage Cap Reductn	0	0		0	0	0	0
Reduced v/c Ratio	0.45	0.43		0.64	0.08	0.28	0.25

Intersection Summary	
Area Type:	Other
Cycle Length: 120	
Actuated Cycle Length: 120	
Offset: 28 (23%), Referenced to phase 2:EBT and 6:WBT, Start of Green	
Natural Cycle: 90	
Control Type: Actuated-Coordinated	
Maximum v/c Ratio: 0.60	

DocuSign Envelope ID: 5C03745C-4B01-4834-A65D-B77F558A4F46

Intersection Signal Delay: 11.8	Intersection LOS: B
Intersection Capacity Utilization 55.8%	ICU Level of Service B
Analysis Period (min) 15	

m Volume for 95th percentile queue is metered by upstream signal.

Splits and Phases: 1: NC 191 (Brevard Rd) & Commercial Access

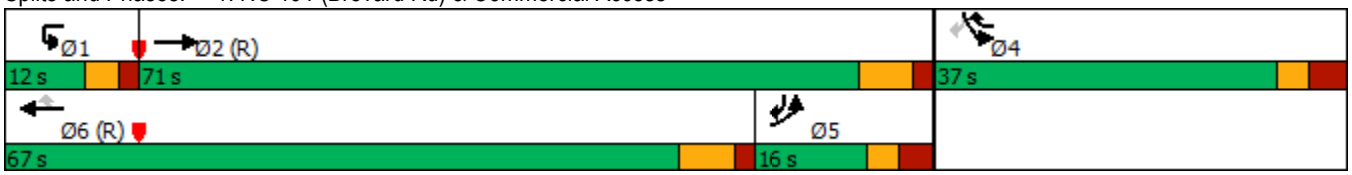

DocuSign Envelope ID: 5C03745C-4B01-4834-A65D-B77F558A4F46

Lane Group	EBT	EBR	WBL	WBT	NBL	NBR
Lane Configurations						
Traffic Volume (vph)	987	149	265	908	310	74
Future Volume (vph)	987	149	265	908	310	74
Ideal Flow (vphpl)	1900	1900	1900	1900	1900	1900
Grade (%)	-1%			-1%	0%	
Storage Length (ft)		225	200		0	0
Storage Lanes		1	1		2	1
Taper Length (ft)			25		25	
Lane Util. Factor	0.95	1.00	1.00	0.95	0.97	1.00
Frt		0.850				0.850
Flt Protected			0.950		0.950	
Satd. Flow (prot)	3423	1449	1620	3423	3303	1524
Flt Permitted			0.950		0.950	
Satd. Flow (perm)	3423	1449	1620	3423	3303	1524
Right Turn on Red		No				Yes
Satd. Flow (RTOR)						36
Link Speed (mph)	45			45	45	
Link Distance (ft)	558			1204	323	
Travel Time (s)	8.5			18.2	4.9	
Peak Hour Factor	0.90	0.90	0.90	0.90	0.90	0.90
Heavy Vehicles (%)	6%	12%	12%	6%	6%	6%
Adj. Flow (vph)	1097	166	294	1009	344	82
Shared Lane Traffic (%)						
Lane Group Flow (vph)	1097	166	294	1009	344	82
Enter Blocked Intersection	No	No	No	No	No	No
Lane Alignment	Left	Right	Left	Left	Left	Right
Median Width(ft)	12			12	40	
Link Offset(ft)	0			0	0	
Crosswalk Width(ft)	16			16	16	
Two way Left Turn Lane						
Headway Factor	0.99	0.99	0.99	0.99	1.00	1.00
Turning Speed (mph)		9	15		15	9
Number of Detectors	2	1	1	2	1	1
Detector Template	Thru	Right	Left	Thru	Left	Right
Leading Detector (ft)	100	20	20	100	20	20
Trailing Detector (ft)	0	0	0	0	0	0
Detector 1 Position(ft)	0	0	0	0	0	0
Detector 1 Size(ft)	6	20	20	6	20	20
Detector 1 Type	Cl+Ex	Cl+Ex	Cl+Ex	Cl+Ex	Cl+Ex	Cl+Ex
Detector 1 Channel						
Detector 1 Extend (s)	0.0	0.0	0.0	0.0	0.0	0.0
Detector 1 Queue (s)	0.0	0.0	0.0	0.0	0.0	0.0
Detector 1 Delay (s)	0.0	0.0	0.0	0.0	0.0	0.0
Detector 2 Position(ft)	94			94		
Detector 2 Size(ft)	6			6		
Detector 2 Type	Cl+Ex			Cl+Ex		
Detector 2 Channel						
Detector 2 Extend (s)	0.0			0.0		
Turn Type	NA	pm+ov	Prot	NA	Prot	pm+ov

DocuSign Envelope ID: 5C03745C-4B01-4834-A65D-B77F558A4F46



Lane Group	EBT	EBR	WBL	WBT	NBL	NBR
Protected Phases	2	4	1	6	4	1
Permitted Phases		2				4
Detector Phase	2	4	1	6	4	1
Switch Phase						
Minimum Initial (s)	12.0	7.0	10.0	12.0	7.0	10.0
Minimum Split (s)	18.0	13.9	16.3	18.6	13.9	16.3
Total Split (s)	57.0	24.0	39.0	96.0	24.0	39.0
Total Split (%)	47.5%	20.0%	32.5%	80.0%	20.0%	32.5%
Maximum Green (s)	51.0	17.1	32.7	89.4	17.1	32.7
Yellow Time (s)	4.4	3.0	3.0	4.7	3.0	3.0
All-Red Time (s)	1.6	3.9	3.3	1.9	3.9	3.3
Lost Time Adjust (s)	-1.0	-1.9	-1.3	-1.6	-1.9	-1.9
Total Lost Time (s)	5.0	5.0	5.0	5.0	5.0	4.4
Lead/Lag	Lead		Lag			Lag
Lead-Lag Optimize?	Yes		Yes			Yes
Vehicle Extension (s)	6.0	5.0	2.5	6.0	5.0	2.5
Minimum Gap (s)	3.0	0.2	0.2	3.0	0.2	0.2
Time Before Reduce (s)	15.0	0.0	0.0	15.0	0.0	0.0
Time To Reduce (s)	30.0	0.0	0.0	30.0	0.0	0.0
Recall Mode	C-Max	None	None	C-Max	None	None
Act Effct Green (s)	52.4	76.0	34.0	91.4	18.6	58.2
Actuated g/C Ratio	0.44	0.63	0.28	0.76	0.16	0.48
v/c Ratio	0.73	0.18	0.64	0.39	0.67	0.11
Control Delay	27.9	8.6	25.5	4.0	55.1	10.3
Queue Delay	0.3	0.0	0.0	0.0	0.0	0.0
Total Delay	28.2	8.6	25.5	4.0	55.1	10.3
LOS	C	A	C	A	E	B
Approach Delay	25.7			8.9	46.5	
Approach LOS	C			A	D	
Queue Length 50th (ft)	382	44	203	79	130	18
Queue Length 95th (ft)	465	72	302	89	181	47
Internal Link Dist (ft)	478			1124	243	
Turn Bay Length (ft)		225	200			
Base Capacity (vph)	1496	910	459	2608	522	757
Starvation Cap Reductn	87	0	0	0	0	0
Spillback Cap Reductn	0	0	0	0	0	0
Storage Cap Reductn	0	0	0	0	0	0
Reduced v/c Ratio	0.78	0.18	0.64	0.39	0.66	0.11

Intersection Summary			
Area Type:	Other		
Cycle Length: 120			
Actuated Cycle Length: 120			
Offset: 4 (3%), Referenced to phase 2:EBT and 6:WBT, Start of Green			
Natural Cycle: 60			
Control Type: Actuated-Coordinated			
Maximum v/c Ratio: 0.73			
Intersection Signal Delay: 21.3		Intersection LOS: C	
Intersection Capacity Utilization 63.3%		ICU Level of Service B	

DocuSign Envelope ID: 5C03745C-4B01-4834-A65D-B77F558A4F46

Analysis Period (min) 15

Splits and Phases: 2: I-26 SEB Ramps & NC 191 (Brevard Rd)

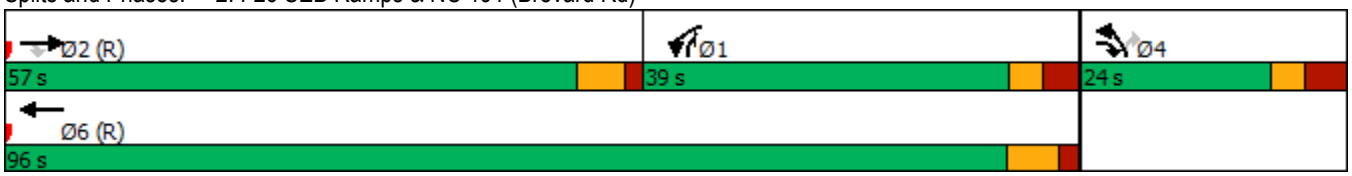

DocuSign Envelope ID: 5C03745C-4B01-4834-A65D-B77F558A4F46

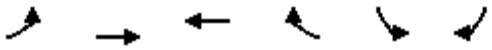

Lane Group	EBL	EBT	WBT	WBR	SBL	SBR
Lane Configurations						
Traffic Volume (vph)	214	847	979	47	373	194
Future Volume (vph)	214	847	979	47	373	194
Ideal Flow (vphpl)	1900	1900	1900	1900	1900	1900
Grade (%)		2%	-2%		2%	
Storage Length (ft)	625			200	0	400
Storage Lanes	2			1	2	1
Taper Length (ft)	25				25	
Lane Util. Factor	0.97	0.95	0.95	1.00	0.97	1.00
Frt				0.850		0.850
Flt Protected	0.950				0.950	
Satd. Flow (prot)	3095	3340	3408	1456	3240	1494
Flt Permitted	0.950				0.950	
Satd. Flow (perm)	3095	3340	3408	1456	3240	1494
Right Turn on Red				No		No
Satd. Flow (RTOR)						
Link Speed (mph)		45	45		45	
Link Distance (ft)		802	1565		860	
Travel Time (s)		12.2	23.7		13.0	
Peak Hour Factor	0.90	0.90	0.90	0.90	0.90	0.90
Heavy Vehicles (%)	12%	7%	7%	12%	7%	7%
Adj. Flow (vph)	238	941	1088	52	414	216
Shared Lane Traffic (%)						
Lane Group Flow (vph)	238	941	1088	52	414	216
Enter Blocked Intersection	No	No	No	No	No	No
Lane Alignment	Left	Left	Left	Right	Left	Right
Median Width(ft)		24	12		36	
Link Offset(ft)		0	0		0	
Crosswalk Width(ft)		16	16		16	
Two way Left Turn Lane						
Headway Factor	1.01	1.01	0.99	0.99	1.01	1.01
Turning Speed (mph)	15			9	15	9
Number of Detectors	1	2	2	1	1	1
Detector Template	Left	Thru	Thru	Right	Left	Right
Leading Detector (ft)	20	100	100	20	20	20
Trailing Detector (ft)	0	0	0	0	0	0
Detector 1 Position(ft)	0	0	0	0	0	0
Detector 1 Size(ft)	20	6	6	20	20	20
Detector 1 Type	Cl+Ex	Cl+Ex	Cl+Ex	Cl+Ex	Cl+Ex	Cl+Ex
Detector 1 Channel						
Detector 1 Extend (s)	0.0	0.0	0.0	0.0	0.0	0.0
Detector 1 Queue (s)	0.0	0.0	0.0	0.0	0.0	0.0
Detector 1 Delay (s)	0.0	0.0	0.0	0.0	0.0	0.0
Detector 2 Position(ft)		94	94			
Detector 2 Size(ft)		6	6			
Detector 2 Type		Cl+Ex	Cl+Ex			
Detector 2 Channel						
Detector 2 Extend (s)		0.0	0.0			
Turn Type	Prot	NA	NA	pm+ov	Prot	pm+ov

DocuSign Envelope ID: 5C03745C-4B01-4834-A65D-B77F558A4F46

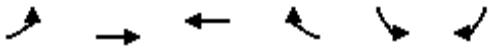

Lane Group	EBL	EBT	WBT	WBR	SBL	SBR
Protected Phases	5	2	6	4	4	5
Permitted Phases				6		4
Detector Phase	5	2	6	4	4	5
Switch Phase						
Minimum Initial (s)	7.0	12.0	12.0	7.0	7.0	7.0
Minimum Split (s)	14.0	19.0	25.0	25.0	25.0	14.0
Total Split (s)	23.0	89.0	66.0	31.0	31.0	23.0
Total Split (%)	19.2%	74.2%	55.0%	25.8%	25.8%	19.2%
Maximum Green (s)	16.0	82.0	59.0	24.0	24.0	16.0
Yellow Time (s)	5.0	5.0	5.0	5.0	5.0	5.0
All-Red Time (s)	2.0	2.0	2.0	2.0	2.0	2.0
Lost Time Adjust (s)	-2.0	-2.0	-2.0	-2.0	-2.0	-2.0
Total Lost Time (s)	5.0	5.0	5.0	5.0	5.0	5.0
Lead/Lag	Lag		Lead			Lag
Lead-Lag Optimize?	Yes		Yes			Yes
Vehicle Extension (s)	3.0	3.0	3.0	3.0	3.0	3.0
Minimum Gap (s)	0.2	3.0	3.0	0.2	0.2	0.2
Time Before Reduce (s)	0.0	15.0	15.0	0.0	0.0	0.0
Time To Reduce (s)	0.0	30.0	30.0	0.0	0.0	0.0
Recall Mode	None	C-Max	C-Max	None	None	None
Walk Time (s)			7.0	7.0	7.0	
Flash Dont Walk (s)			11.0	11.0	11.0	
Pedestrian Calls (#/hr)			0	0	0	
Act Effct Green (s)	18.0	87.8	64.8	92.0	22.2	45.2
Actuated g/C Ratio	0.15	0.73	0.54	0.77	0.18	0.38
v/c Ratio	0.51	0.39	0.59	0.05	0.69	0.38
Control Delay	21.2	1.4	20.8	3.5	51.9	29.0
Queue Delay	0.0	0.0	0.0	0.0	0.0	0.0
Total Delay	21.2	1.4	20.8	3.5	51.9	29.0
LOS	C	A	C	A	D	C
Approach Delay		5.4	20.0		44.0	
Approach LOS		A	B		D	
Queue Length 50th (ft)	90	18	289	8	155	120
Queue Length 95th (ft)	m113	27	381	17	202	179
Internal Link Dist (ft)		722	1485		780	
Turn Bay Length (ft)	625			200		400
Base Capacity (vph)	464	2444	1841	1104	702	562
Starvation Cap Reductn	0	0	0	0	0	0
Spillback Cap Reductn	0	0	0	0	0	0
Storage Cap Reductn	0	0	0	0	0	0
Reduced v/c Ratio	0.51	0.39	0.59	0.05	0.59	0.38

Intersection Summary	
Area Type:	Other
Cycle Length: 120	
Actuated Cycle Length: 120	
Offset: 2 (2%), Referenced to phase 2:EBT and 6:WBT, Start of Green	
Natural Cycle: 65	
Control Type: Actuated-Coordinated	

DocuSign Envelope ID: 5C03745C-4B01-4834-A65D-B77F558A4F46

Maximum v/c Ratio: 0.69	
Intersection Signal Delay: 19.3	Intersection LOS: B
Intersection Capacity Utilization 56.3%	ICU Level of Service B
Analysis Period (min) 15	

m Volume for 95th percentile queue is metered by upstream signal.

Splits and Phases: 3: NC 191 (Brevard Rd) & I-26 NWB Ramps

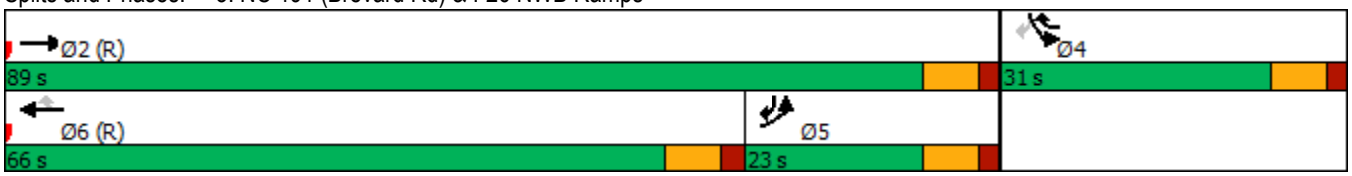

DocuSign Envelope ID: 5C03745C-4B01-4834-A65D-B77F558A4F46

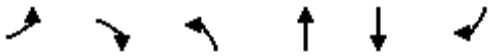

Lane Group	EBL	EBR	NBL	NBT	SBT	SBR
Lane Configurations						
Traffic Volume (vph)	56	19	22	127	159	83
Future Volume (vph)	56	19	22	127	159	83
Ideal Flow (vphpl)	1900	1900	1900	1900	1900	1900
Grade (%)	0%			0%	3%	
Storage Length (ft)	75	0	275			0
Storage Lanes	1	1	1			0
Taper Length (ft)	25		25			
Lane Util. Factor	1.00	1.00	1.00	1.00	1.00	1.00
Ped Bike Factor						
Frt		0.850			0.954	
Flt Protected	0.950		0.950			
Satd. Flow (prot)	1770	1583	1770	1863	1750	0
Flt Permitted	0.950		0.950			
Satd. Flow (perm)	1770	1583	1770	1863	1750	0
Link Speed (mph)	20			35	35	
Link Distance (ft)	1081			1059	248	
Travel Time (s)	36.9			20.6	4.8	
Confl. Bikes (#/hr)						159
Peak Hour Factor	0.90	0.90	0.90	0.90	0.90	0.90
Adj. Flow (vph)	62	21	24	141	177	92
Shared Lane Traffic (%)						
Lane Group Flow (vph)	62	21	24	141	269	0
Enter Blocked Intersection	No	No	No	No	No	No
Lane Alignment	Left	Right	Left	Left	Left	Right
Median Width(ft)	12			12	0	
Link Offset(ft)	0			0	0	
Crosswalk Width(ft)	16			16	16	
Two way Left Turn Lane						
Headway Factor	1.00	1.00	1.00	1.00	1.02	1.02
Turning Speed (mph)	15	9	15			9
Sign Control	Stop			Free	Free	

Intersection Summary			
Area Type:	Other		
Control Type: Unsignalized			
Intersection Capacity Utilization 28.3%		ICU Level of Service A	
Analysis Period (min) 15			

DocuSign Envelope ID: 5C03745C-4B01-4834-A65D-B77F558A4F46

Lane Group	EBL	EBT	EBR	WBL	WBT	WBR	NBL	NBT	NBR	SBL	SBT	SBR
Lane Configurations												
Traffic Volume (vph)	38	111	34	81	121	252	62	671	133	356	575	59
Future Volume (vph)	38	111	34	81	121	252	62	671	133	356	575	59
Ideal Flow (vphpl)	1900	1900	1900	1900	1900	1900	1900	1900	1900	1900	1900	1900
Grade (%)		3%			0%			2%			-7%	
Storage Length (ft)	0		0	200		0	175		150	200		0
Storage Lanes	1		0	1		1	1		1	2		0
Taper Length (ft)	25			25			25			25		
Lane Util. Factor	1.00	0.95	0.95	1.00	1.00	1.00	1.00	0.95	1.00	0.97	0.95	0.95
Frt		0.965				0.850			0.850		0.986	
Flt Protected	0.950			0.950			0.950			0.950		
Satd. Flow (prot)	1743	3364	0	1719	1810	1538	1686	3372	1508	3452	3509	0
Flt Permitted	0.950			0.950			0.950			0.950		
Satd. Flow (perm)	1743	3364	0	1719	1810	1538	1686	3372	1508	3452	3509	0
Right Turn on Red			No			No			No			No
Satd. Flow (RTOR)												
Link Speed (mph)		35			35			45			45	
Link Distance (ft)		248			1390			1589			1600	
Travel Time (s)		4.8			27.1			24.1			24.2	
Peak Hour Factor	0.90	0.90	0.90	0.90	0.90	0.90	0.90	0.90	0.90	0.90	0.90	0.90
Heavy Vehicles (%)	2%	2%	2%	5%	5%	5%	6%	6%	6%	5%	5%	5%
Adj. Flow (vph)	42	123	38	90	134	280	69	746	148	396	639	66
Shared Lane Traffic (%)												
Lane Group Flow (vph)	42	161	0	90	134	280	69	746	148	396	705	0
Enter Blocked Intersection	No	No	No	No	No	No	No	No	No	No	No	No
Lane Alignment	L NA	Left	Right	Left	Left	Left	Left	L NA	Right	Left	Left	Right
Median Width(ft)		12			12			24			24	
Link Offset(ft)		0			0			0			0	
Crosswalk Width(ft)		16			16			16			16	
Two way Left Turn Lane												
Headway Factor	1.02	1.02	1.02	1.00	1.00	1.00	1.01	1.01	1.01	0.96	0.96	0.96
Turning Speed (mph)	15		9	15		9	15		9	15		9
Number of Detectors	1	2		1	2	1	1	2	1	1	2	
Detector Template	Left	Thru		Left	Thru	Right	Left	Thru	Right	Left	Thru	
Leading Detector (ft)	20	100		20	100	20	20	100	20	20	100	
Trailing Detector (ft)	0	0		0	0	0	0	0	0	0	0	
Detector 1 Position(ft)	0	0		0	0	0	0	0	0	0	0	
Detector 1 Size(ft)	20	6		20	6	20	20	6	20	20	6	
Detector 1 Type	Cl+Ex	Cl+Ex		Cl+Ex	Cl+Ex	Cl+Ex	Cl+Ex	Cl+Ex	Cl+Ex	Cl+Ex	Cl+Ex	
Detector 1 Channel												
Detector 1 Extend (s)	0.0	0.0		0.0	0.0	0.0	0.0	0.0	0.0	0.0	0.0	
Detector 1 Queue (s)	0.0	0.0		0.0	0.0	0.0	0.0	0.0	0.0	0.0	0.0	
Detector 1 Delay (s)	0.0	0.0		0.0	0.0	0.0	0.0	0.0	0.0	0.0	0.0	
Detector 2 Position(ft)		94			94			94			94	
Detector 2 Size(ft)		6			6			6			6	
Detector 2 Type		Cl+Ex			Cl+Ex			Cl+Ex			Cl+Ex	
Detector 2 Channel												
Detector 2 Extend (s)		0.0			0.0			0.0			0.0	
Turn Type	Prot	NA		Prot	NA	pm+ov	Prot	NA	pm+ov	Prot	NA	

DocuSign Envelope ID: 5C03745C-4B01-4834-A65D-B77F558A4F46

Lane Group	EBL	EBT	EBR	WBL	WBT	WBR	NBL	NBT	NBR	SBL	SBT	SBR
Protected Phases	7	4		3	8	1	5	2	3	1	6	
Permitted Phases						8			2			
Detector Phase	7	4		3	8	1	5	2	3	1	6	
Switch Phase												
Minimum Initial (s)	7.0	7.0		7.0	7.0	7.0	7.0	12.0	7.0	7.0	12.0	
Minimum Split (s)	14.0	14.0		14.0	14.0	14.0	14.0	19.0	14.0	14.0	19.0	
Total Split (s)	16.0	20.0		20.0	24.0	29.0	17.0	51.0	20.0	29.0	63.0	
Total Split (%)	13.3%	16.7%		16.7%	20.0%	24.2%	14.2%	42.5%	16.7%	24.2%	52.5%	
Maximum Green (s)	9.0	13.0		13.0	17.0	22.0	10.0	44.0	13.0	22.0	56.0	
Yellow Time (s)	5.0	5.0		5.0	5.0	5.0	5.0	5.0	5.0	5.0	5.0	
All-Red Time (s)	2.0	2.0		2.0	2.0	2.0	2.0	2.0	2.0	2.0	2.0	
Lost Time Adjust (s)	-2.0	-2.0		-2.0	-2.0	-2.0	-2.0	-2.0	-2.0	-2.0	-2.0	
Total Lost Time (s)	5.0	5.0		5.0	5.0	5.0	5.0	5.0	5.0	5.0	5.0	
Lead/Lag	Lead	Lag		Lead	Lag	Lead	Lead	Lag	Lead	Lead	Lag	
Lead-Lag Optimize?	Yes	Yes		Yes	Yes	Yes	Yes	Yes	Yes	Yes	Yes	
Vehicle Extension (s)	3.0	3.0		3.0	3.0	3.0	3.0	3.0	3.0	3.0	3.0	
Minimum Gap (s)	3.0	3.0		3.0	3.0	3.0	3.0	3.0	3.0	3.0	3.0	
Time Before Reduce (s)	0.0	0.0		0.0	0.0	0.0	0.0	15.0	0.0	0.0	15.0	
Time To Reduce (s)	0.0	0.0		0.0	0.0	0.0	0.0	30.0	0.0	0.0	30.0	
Recall Mode	None	None		None	None	None	None	Min	None	None	Min	
Act Effct Green (s)	10.1	12.0		12.3	21.0	44.4	10.9	29.4	46.8	18.3	40.4	
Actuated g/C Ratio	0.11	0.13		0.13	0.23	0.48	0.12	0.32	0.51	0.20	0.44	
v/c Ratio	0.22	0.37		0.39	0.33	0.38	0.35	0.70	0.19	0.58	0.46	
Control Delay	46.4	42.4		46.3	38.9	20.6	47.9	32.1	13.9	38.9	20.8	
Queue Delay	0.0	0.0		0.0	0.0	0.0	0.0	0.0	0.0	0.0	0.0	
Total Delay	46.4	42.4		46.3	38.9	20.6	47.9	32.1	13.9	38.9	20.8	
LOS	D	D		D	D	C	D	C	B	D	C	
Approach Delay		43.2			30.1			30.4			27.3	
Approach LOS		D			C			C			C	
Queue Length 50th (ft)	23	45		48	71	113	37	196	44	107	160	
Queue Length 95th (ft)	66	92		114	154	221	95	304	92	186	231	
Internal Link Dist (ft)		168			1310			1509			1520	
Turn Bay Length (ft)				200			175		150	200		
Base Capacity (vph)	213	561		286	434	845	225	1725	814	922	2264	
Starvation Cap Reductn	0	0		0	0	0	0	0	0	0	0	
Spillback Cap Reductn	0	0		0	0	0	0	0	0	0	0	
Storage Cap Reductn	0	0		0	0	0	0	0	0	0	0	
Reduced v/c Ratio	0.20	0.29		0.31	0.31	0.33	0.31	0.43	0.18	0.43	0.31	

Intersection Summary			
Area Type:	Other		
Cycle Length: 120			
Actuated Cycle Length: 92.5			
Natural Cycle: 65			
Control Type: Actuated-Uncoordinated			
Maximum v/c Ratio: 0.70			
Intersection Signal Delay: 30.1		Intersection LOS: C	
Intersection Capacity Utilization 57.6%		ICU Level of Service B	
Analysis Period (min) 15			

DocuSign Envelope ID: 5C03745C-4B01-4834-A65D-B77F558A4F46

Splits and Phases: 5: NC 191 (Brevard Rd) & Blue Ridge Pkwy Access/NC 191 Connector

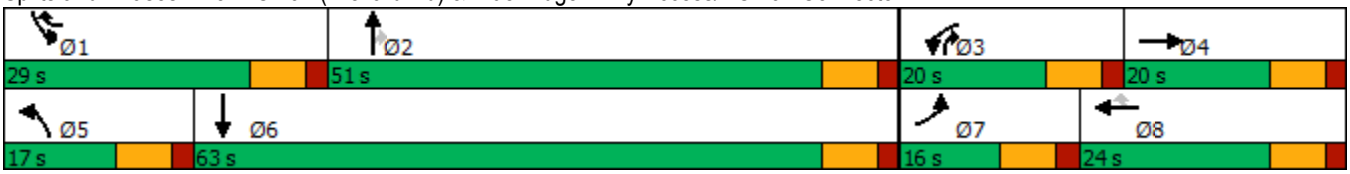

DocuSign Envelope ID: 5C03745C-4B01-4834-A65D-B77F558A4F46

Lane Group	EBL	EBT	EBR	WBL	WBT	WBR	SBL	SBR	NWL	NWR	Ø2
Lane Configurations											
Traffic Volume (vph)	0	0	633	0	417	0	0	506	0	0	
Future Volume (vph)	0	0	633	0	417	0	0	506	0	0	
Ideal Flow (vphpl)	1900	1900	1900	1900	1900	1900	1900	1900	1900	1900	
Lane Util. Factor	1.00	1.00	*0.95	1.00	1.00	1.00	1.00	1.00	1.00	1.00	
Frt								0.865			
Flt Protected											
Satd. Flow (prot)	0	0	3438	0	1810	0	0	1565	0	0	
Flt Permitted											
Satd. Flow (perm)	0	0	3438	0	1810	0	0	1565	0	0	
Right Turn on Red			No	No		No		No			
Satd. Flow (RTOR)											
Link Speed (mph)		35			35		35		35		
Link Distance (ft)		177			206		307		102		
Travel Time (s)		3.4			4.0		6.0		2.0		
Peak Hour Factor	0.90	0.90	0.90	0.90	0.90	0.90	0.90	0.90	0.90	0.90	
Heavy Vehicles (%)	2%	2%	5%	2%	5%	2%	2%	5%	2%	2%	
Adj. Flow (vph)	0	0	703	0	463	0	0	562	0	0	
Shared Lane Traffic (%)											
Lane Group Flow (vph)	0	0	703	0	463	0	0	562	0	0	
Enter Blocked Intersection	No	No	No	No	No	No	No	No	No	No	
Lane Alignment	Left	Left	Right	Left	Left	Right	Left	Right	Left	Right	
Median Width(ft)		0			0		0		0		
Link Offset(ft)		0			0		0		0		
Crosswalk Width(ft)		16			16		16		16		
Two way Left Turn Lane											
Headway Factor	1.00	1.00	1.00	1.00	1.00	1.00	1.00	1.00	1.00	1.00	
Turning Speed (mph)	15		35	15		9	15	9	15	9	
Number of Detectors			1		2			1			
Detector Template			Right		Thru			Right			
Leading Detector (ft)			20		100			20			
Trailing Detector (ft)			0		0			0			
Detector 1 Position(ft)			0		0			0			
Detector 1 Size(ft)			20		6			20			
Detector 1 Type			Cl+Ex		Cl+Ex			Cl+Ex			
Detector 1 Channel											
Detector 1 Extend (s)			0.0		0.0			0.0			
Detector 1 Queue (s)			0.0		0.0			0.0			
Detector 1 Delay (s)			0.0		0.0			0.0			
Detector 2 Position(ft)					94						
Detector 2 Size(ft)					6						
Detector 2 Type					Cl+Ex						
Detector 2 Channel											
Detector 2 Extend (s)					0.0						
Turn Type			Perm		NA			Prot			
Protected Phases					8			6			2
Permitted Phases			2 8								
Detector Phase			2 8		8			6			
Switch Phase											

DocuSign Envelope ID: 5C03745C-4B01-4834-A65D-B77F558A4F46

Lane Group	EBL	EBT	EBR	WBL	WBT	WBR	SBL	SBR	NWL	NWR	Ø2
Minimum Initial (s)					10.0			7.0			10.0
Minimum Split (s)					21.0			14.0			17.0
Total Split (s)					26.0			34.0			34.0
Total Split (%)					43.3%			56.7%			57%
Maximum Green (s)					15.0			27.0			27.0
Yellow Time (s)					5.0			5.0			5.0
All-Red Time (s)					6.0			2.0			2.0
Lost Time Adjust (s)					-5.0			-2.0			
Total Lost Time (s)					6.0			5.0			
Lead/Lag											
Lead-Lag Optimize?											
Vehicle Extension (s)					3.0			3.0			3.0
Recall Mode					Min			None			Min
Act Effct Green (s)			56.3		20.1			25.1			
Actuated g/C Ratio			1.00		0.36			0.45			
v/c Ratio			0.20		0.72			0.81			
Control Delay			0.1		11.0			24.0			
Queue Delay			0.0		0.0			0.0			
Total Delay			0.1		11.0			24.0			
LOS			A		B			C			
Approach Delay		0.1			11.0		24.0				
Approach LOS		A			B		C				
Queue Length 50th (ft)			0		13			152			
Queue Length 95th (ft)			0		m#70			#285			
Internal Link Dist (ft)		97			126		227		22		
Turn Bay Length (ft)											
Base Capacity (vph)			3321		648			812			
Starvation Cap Reductn			0		0			0			
Spillback Cap Reductn			0		0			0			
Storage Cap Reductn			0		0			0			
Reduced v/c Ratio			0.21		0.71			0.69			

Intersection Summary			
Area Type:	Other		
Cycle Length: 60			
Actuated Cycle Length: 56.3			
Natural Cycle: 60			
Control Type: Actuated-Uncoordinated			
Maximum v/c Ratio: 0.81			
Intersection Signal Delay: 10.8		Intersection LOS: B	
Intersection Capacity Utilization 62.4%		ICU Level of Service B	
Analysis Period (min) 15			

* User Entered Value

\# 95th percentile volume exceeds capacity, queue may be longer.
Queue shown is maximum after two cycles.

m Volume for 95th percentile queue is metered by upstream signal.

Splits and Phases: 6: NC 191 Connector & HE-0001 SB Off Ramp

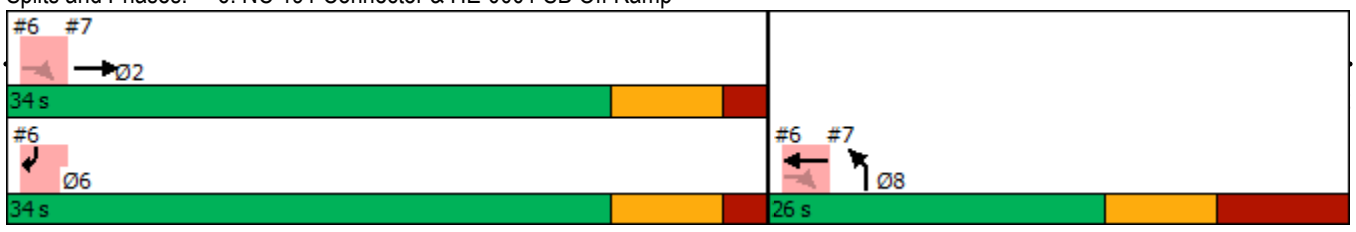

DocuSign Envelope ID: 5C03745C-4B01-4834-A65D-B77F558A4F46

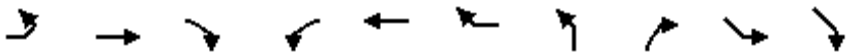

Lane Group	EBL	EBT	EBR	WBL	WBT	WBR	NBL	NBR	SEL	SER	Ø6
Lane Configurations											
Traffic Volume (vph)	0	331	0	0	0	0	417	0	0	0	
Future Volume (vph)	0	331	0	0	0	0	417	0	0	0	
Ideal Flow (vphpl)	1900	1900	1900	1900	1900	1900	1900	1900	1900	1900	
Lane Util. Factor	1.00	1.00	1.00	1.00	1.00	1.00	1.00	1.00	1.00	1.00	
Frt											
Flt Protected											
Satd. Flow (prot)	0	1810	0	0	0	0	1810	0	0	0	
Flt Permitted											
Satd. Flow (perm)	0	1810	0	0	0	0	1810	0	0	0	
Right Turn on Red	No		No			No		No			
Satd. Flow (RTOR)											
Link Speed (mph)		35			35		35		35		
Link Distance (ft)		114			195		160		206		
Travel Time (s)		2.2			3.8		3.1		4.0		
Peak Hour Factor	0.90	0.90	0.90	0.90	0.90	0.90	0.90	0.90	0.90	0.90	
Heavy Vehicles (%)	2%	5%	2%	2%	2%	2%	5%	2%	2%	2%	
Adj. Flow (vph)	0	368	0	0	0	0	463	0	0	0	
Shared Lane Traffic (%)											
Lane Group Flow (vph)	0	368	0	0	0	0	463	0	0	0	
Enter Blocked Intersection	No	No	No	No	No	No	No	No	No	No	
Lane Alignment	Left	Left	Right	Left	Left	Right	Left	Right	Left	Right	
Median Width(ft)		0			0		12		0		
Link Offset(ft)		0			0		0		0		
Crosswalk Width(ft)		16			16		16		16		
Two way Left Turn Lane											
Headway Factor	1.00	1.00	1.00	1.00	1.00	1.00	1.00	1.00	1.00	1.00	
Turning Speed (mph)	15		9	15		9	35	9	15	9	
Number of Detectors		2					1				
Detector Template		Thru					Left				
Leading Detector (ft)		100					20				
Trailing Detector (ft)		0					0				
Detector 1 Position(ft)		0					0				
Detector 1 Size(ft)		6					20				
Detector 1 Type		Cl+Ex					Cl+Ex				
Detector 1 Channel											
Detector 1 Extend (s)		0.0					0.0				
Detector 1 Queue (s)		0.0					0.0				
Detector 1 Delay (s)		0.0					0.0				
Detector 2 Position(ft)		94									
Detector 2 Size(ft)		6									
Detector 2 Type		Cl+Ex									
Detector 2 Channel											
Detector 2 Extend (s)		0.0									
Turn Type		NA					Prot				
Protected Phases		2					8				6
Permitted Phases											
Detector Phase		2					8				
Switch Phase											

DocuSign Envelope ID: 5C03745C-4B01-4834-A65D-B77F558A4F46

Lane Group	EBL	EBT	EBR	WBL	WBT	WBR	NBL	NBR	SEL	SER	Ø6
Minimum Initial (s)		10.0					10.0				7.0
Minimum Split (s)		17.0					21.0				14.0
Total Split (s)		34.0					26.0				34.0
Total Split (%)		56.7%					43.3%				57%
Maximum Green (s)		27.0					15.0				27.0
Yellow Time (s)		5.0					5.0				5.0
All-Red Time (s)		2.0					6.0				2.0
Lost Time Adjust (s)		-2.0					-5.0				
Total Lost Time (s)		5.0					6.0				
Lead/Lag											
Lead-Lag Optimize?											
Vehicle Extension (s)		3.0					3.0				3.0
Recall Mode		Min					Min				None
Act Effct Green (s)		25.1					20.1				
Actuated g/C Ratio		0.45					0.36				
v/c Ratio		0.46					0.72				
Control Delay		12.7					25.1				
Queue Delay		0.0					0.1				
Total Delay		12.7					25.3				
LOS		B					C				
Approach Delay		12.7					25.3				
Approach LOS		B					C				
Queue Length 50th (ft)		80					143				
Queue Length 95th (ft)		138					#281				
Internal Link Dist (ft)		34			115		80		126		
Turn Bay Length (ft)											
Base Capacity (vph)		939					648				
Starvation Cap Reductn		0					0				
Spillback Cap Reductn		0					10				
Storage Cap Reductn		0					0				
Reduced v/c Ratio		0.39					0.73				

Intersection Summary			
Area Type:	Other		
Cycle Length: 60			
Actuated Cycle Length: 56.3			
Natural Cycle: 60			
Control Type: Actuated-Uncoordinated			
Maximum v/c Ratio: 0.81			
Intersection Signal Delay: 19.7		Intersection LOS: B	
Intersection Capacity Utilization 49.7%		ICU Level of Service A	
Analysis Period (min) 15			
# 95th percentile volume exceeds capacity, queue may be longer.			
Queue shown is maximum after two cycles.			

Splits and Phases: 7: NC 191 Connector WB & NC 191 Connector EB

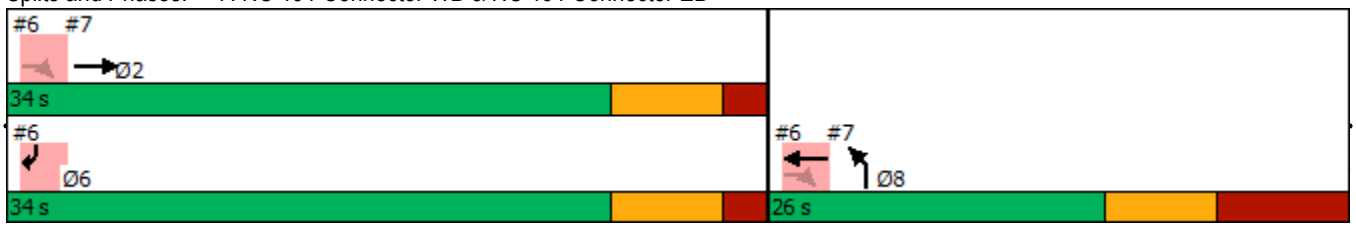

DocuSign Envelope ID: 5C03745C-4B01-4834-A65D-B77F558A4F46

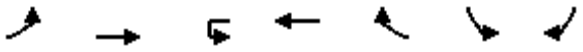

Lane Group	EBL	EBT	WBU	WBT	WBR	SBL	SBR
Lane Configurations							
Traffic Volume (vph)	42	673	0	697	315	402	56
Future Volume (vph)	42	673	0	697	315	402	56
Ideal Flow (vphpl)	1900	1900	1900	1900	1900	1900	1900
Grade (%)		-9%		5%		-9%	
Storage Length (ft)	500		350		0	0	400
Storage Lanes	1		1		1	2	1
Taper Length (ft)	25		25			25	
Lane Util. Factor	1.00	1.00	1.00	1.00	1.00	0.97	1.00
Frt					0.850		0.850
Flt Protected	0.950					0.950	
Satd. Flow (prot)	1715	1805	1715	1715	1458	3485	1607
Flt Permitted	0.950					0.950	
Satd. Flow (perm)	1715	1805	1715	1715	1458	3485	1607
Right Turn on Red					No		No
Satd. Flow (RTOR)							
Link Speed (mph)		35		35		45	
Link Distance (ft)		1579		1808		1089	
Travel Time (s)		30.8		35.2		16.5	
Peak Hour Factor	0.90	0.90	0.90	0.90	0.90	0.90	0.90
Heavy Vehicles (%)	10%	10%	8%	8%	8%	5%	5%
Adj. Flow (vph)	47	748	0	774	350	447	62
Shared Lane Traffic (%)							
Lane Group Flow (vph)	47	748	0	774	350	447	62
Enter Blocked Intersection	No	No	No	No	No	No	No
Lane Alignment	Left	Left	R NA	Left	Right	Left	Right
Median Width(ft)		12		12		24	
Link Offset(ft)		0		0		0	
Crosswalk Width(ft)		16		16		16	
Two way Left Turn Lane							
Headway Factor	0.94	0.94	1.03	1.03	1.03	0.94	0.94
Turning Speed (mph)	15		9		9	15	9
Number of Detectors	1	2	1	2	1	1	1
Detector Template	Left	Thru	Left	Thru	Right	Left	Right
Leading Detector (ft)	20	100	20	100	20	20	20
Trailing Detector (ft)	0	0	0	0	0	0	0
Detector 1 Position(ft)	0	0	0	0	0	0	0
Detector 1 Size(ft)	20	6	20	6	20	20	20
Detector 1 Type	Cl+Ex	Cl+Ex	Cl+Ex	Cl+Ex	Cl+Ex	Cl+Ex	Cl+Ex
Detector 1 Channel							
Detector 1 Extend (s)	0.0	0.0	0.0	0.0	0.0	0.0	0.0
Detector 1 Queue (s)	0.0	0.0	0.0	0.0	0.0	0.0	0.0
Detector 1 Delay (s)	0.0	0.0	0.0	0.0	0.0	0.0	0.0
Detector 2 Position(ft)		94		94			
Detector 2 Size(ft)		6		6			
Detector 2 Type		Cl+Ex		Cl+Ex			
Detector 2 Channel							
Detector 2 Extend (s)		0.0		0.0			
Turn Type	Prot	NA	Prot	NA	pm+ov	Prot	pm+ov

DocuSign Envelope ID: 5C03745C-4B01-4834-A65D-B77F558A4F46

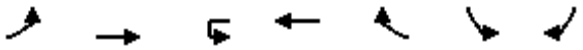

Lane Group	EBL	EBT	WBU	WBT	WBR	SBL	SBR
Protected Phases	5	2	1	6	4	4	5
Permitted Phases					6		4
Detector Phase	5	2	1	6	4	4	5
Switch Phase							
Minimum Initial (s)	7.0	10.0	7.0	10.0	7.0	7.0	7.0
Minimum Split (s)	13.7	17.3	13.3	17.3	13.8	13.8	13.7
Total Split (s)	17.0	125.0	14.0	122.0	41.0	41.0	17.0
Total Split (%)	9.4%	69.4%	7.8%	67.8%	22.8%	22.8%	9.4%
Maximum Green (s)	10.3	117.7	7.7	114.7	34.2	34.2	10.3
Yellow Time (s)	3.3	4.6	3.0	4.6	3.3	3.3	3.3
All-Red Time (s)	3.4	2.7	3.3	2.7	3.5	3.5	3.4
Lost Time Adjust (s)	-1.7	-2.3	-1.3	-2.3	-2.3	-1.8	-1.8
Total Lost Time (s)	5.0	5.0	5.0	5.0	4.5	5.0	4.9
Lead/Lag	Lead	Lag	Lead	Lag			Lead
Lead-Lag Optimize?	Yes	Yes	Yes	Yes			Yes
Vehicle Extension (s)	2.0	3.0	2.0	3.0	3.0	3.0	2.0
Recall Mode	None	C-Max	None	C-Max	None	None	None
Act Effct Green (s)	10.8	139.6		123.9	159.7	30.4	46.2
Actuated g/C Ratio	0.06	0.78		0.69	0.89	0.17	0.26
v/c Ratio	0.46	0.53		0.66	0.27	0.76	0.15
Control Delay	96.0	9.9		11.1	3.3	79.9	50.9
Queue Delay	0.0	0.0		0.0	0.0	0.0	0.0
Total Delay	96.0	9.9		11.1	3.3	79.9	50.9
LOS	F	A		B	A	E	D
Approach Delay		15.0		8.7		76.4	
Approach LOS		B		A		E	
Queue Length 50th (ft)	55	310		293	87	262	57
Queue Length 95th (ft)	103	451		560	118	317	97
Internal Link Dist (ft)		1499		1728		1009	
Turn Bay Length (ft)	500						400
Base Capacity (vph)	115	1400		1180	1339	697	425
Starvation Cap Reductn	0	0		0	0	0	0
Spillback Cap Reductn	0	0		0	0	0	0
Storage Cap Reductn	0	0		0	0	0	0
Reduced v/c Ratio	0.41	0.53		0.66	0.26	0.64	0.15

Intersection Summary			
Area Type:	Other		
Cycle Length: 180			
Actuated Cycle Length: 180			
Offset: 24 (13%), Referenced to phase 2:EBT and 6:WBT, Start of Green			
Natural Cycle: 75			
Control Type: Actuated-Coordinated			
Maximum v/c Ratio: 0.76			
Intersection Signal Delay: 24.9		Intersection LOS: C	
Intersection Capacity Utilization 56.5%		ICU Level of Service B	
Analysis Period (min) 15			

DocuSign Envelope ID: 5C03745C-4B01-4834-A65D-B77F558A4F46

Splits and Phases: 8: NC 146 (Long Shoals Rd) & Clayton Rd

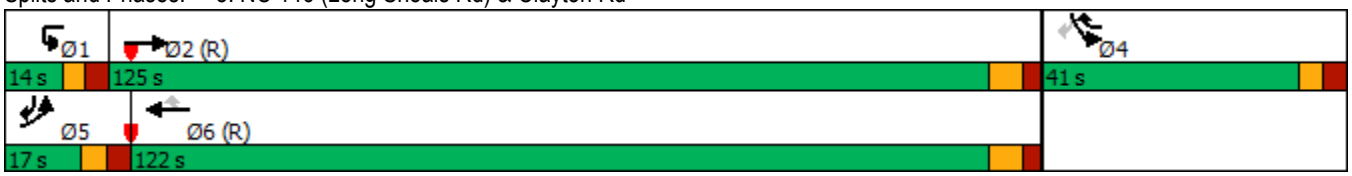

DocuSign Envelope ID: 5C03745C-4B01-4834-A65D-B77F558A4F46

Lane Group	EBU	EBT	EBR	WBL	WBT	NBL	NBR
Lane Configurations							
Traffic Volume (vph)	0	981	23	216	1029	47	481
Future Volume (vph)	0	981	23	216	1029	47	481
Ideal Flow (vphpl)	1900	1900	1900	1900	1900	1900	1900
Storage Length (ft)	325		0	325		200	0
Storage Lanes	1		0	1		1	1
Taper Length (ft)	25			25		25	
Lane Util. Factor	1.00	0.95	0.95	1.00	0.95	1.00	1.00
Frt		0.997					0.850
Flt Protected				0.950		0.950	
Satd. Flow (prot)	1759	3333	0	1671	3343	1752	1568
Flt Permitted				0.950		0.950	
Satd. Flow (perm)	1759	3333	0	1671	3343	1752	1568
Link Speed (mph)		45			45	35	
Link Distance (ft)		1808			1000	1062	
Travel Time (s)		27.4			15.2	20.7	
Peak Hour Factor	0.90	0.90	0.90	0.90	0.90	0.90	0.90
Heavy Vehicles (%)	8%	8%	8%	8%	8%	3%	3%
Adj. Flow (vph)	0	1090	26	240	1143	52	534
Shared Lane Traffic (%)							
Lane Group Flow (vph)	0	1116	0	240	1143	52	534
Enter Blocked Intersection	No	No	No	No	No	No	No
Lane Alignment	Left	Left	Right	Left	Left	Left	Right
Median Width(ft)		15			24	12	
Link Offset(ft)		0			0	0	
Crosswalk Width(ft)		16			16	16	
Two way Left Turn Lane							
Headway Factor	1.00	1.00	1.00	1.00	1.00	1.00	1.00
Turning Speed (mph)	9		9	15		15	9
Sign Control		Free			Free	Stop	

Intersection Summary			
Area Type:	Other		
Control Type: Unsignalized			
Intersection Capacity Utilization	64.3%	ICU Level of Service	C
Analysis Period (min)	15		

DocuSign Envelope ID: 5C03745C-4B01-4834-A65D-B77F558A4F46

Lane Group	EBL	EBT	EBR2	WBL	WBT	SEL	SER2	NWL
Lane Configurations								
Traffic Volume (vph)	230	1046	186	398	707	1194	288	250
Future Volume (vph)	230	1046	186	398	707	1194	288	250
Ideal Flow (vphpl)	1900	1900	1900	1900	1900	1900	1900	1900
Grade (%)		3%			-7%			
Storage Length (ft)	475			0		0		0
Storage Lanes	2			2		2		2
Taper Length (ft)	25			25		25		25
Lane Util. Factor	0.97	0.95	1.00	0.97	0.95	0.97	1.00	0.97
Frt			0.850				0.850	
Flt Protected	0.950			0.950		0.950		0.950
Satd. Flow (prot)	3080	3292	1420	3236	3593	3434	1525	3291
Flt Permitted	0.950			0.950		0.950		0.950
Satd. Flow (perm)	3080	3292	1420	3236	3593	3434	1525	3291
Right Turn on Red			Yes				Yes	
Satd. Flow (RTOR)			190				190	
Link Speed (mph)		45			45			
Link Distance (ft)		1000			418			
Travel Time (s)		15.2			6.3			
Peak Hour Factor	0.90	0.90	0.90	0.90	0.90	0.90	0.90	0.90
Heavy Vehicles (%)	12%	8%	12%	12%	4%	4%	8%	8%
Adj. Flow (vph)	256	1162	207	442	786	1327	320	278
Shared Lane Traffic (%)								
Lane Group Flow (vph)	256	1162	207	442	786	1327	320	278
Enter Blocked Intersection	No	No	No	No	No	No	No	No
Lane Alignment	Left	Left	Right	Left	Left	Left	Right	Left
Median Width(ft)		24			24			
Link Offset(ft)		0			0			
Crosswalk Width(ft)		16			16			
Two way Left Turn Lane								
Headway Factor	1.02	1.02	1.02	0.96	0.96	0.97	0.97	0.98
Turning Speed (mph)	15		9	15		15	9	15
Number of Detectors	1	2	1	1	2	1	1	1
Detector Template	Left	Thru	Right	Left	Thru	Left	Right	Left
Leading Detector (ft)	20	100	20	20	100	20	20	20
Trailing Detector (ft)	0	0	0	0	0	0	0	0
Detector 1 Position(ft)	0	0	0	0	0	0	0	0
Detector 1 Size(ft)	20	6	20	20	6	20	20	20
Detector 1 Type	Cl+Ex	Cl+Ex	Cl+Ex	Cl+Ex	Cl+Ex	Cl+Ex	Cl+Ex	Cl+Ex
Detector 1 Channel								
Detector 1 Extend (s)	0.0	0.0	0.0	0.0	0.0	0.0	0.0	0.0
Detector 1 Queue (s)	0.0	0.0	0.0	0.0	0.0	0.0	0.0	0.0
Detector 1 Delay (s)	0.0	0.0	0.0	0.0	0.0	0.0	0.0	0.0
Detector 2 Position(ft)		94			94			
Detector 2 Size(ft)		6			6			
Detector 2 Type		Cl+Ex			Cl+Ex			
Detector 2 Channel								
Detector 2 Extend (s)		0.0			0.0			
Turn Type	Prot	NA	Free	Prot	NA	Prot	Free	Prot

DocuSign Envelope ID: 5C03745C-4B01-4834-A65D-B77F558A4F46

Lane Group	EBL	EBT	EBR2	WBL	WBT	SEL	SER2	NWL
Protected Phases	5	2		1	6	4		8
Permitted Phases			Free				Free	
Detector Phase	5	2		1	6	4		8
Switch Phase								
Minimum Initial (s)	7.0	12.0		7.0	12.0	7.0		7.0
Minimum Split (s)	15.3	21.0		14.5	21.0	15.0		15.0
Total Split (s)	28.0	89.0		43.0	104.0	48.0		48.0
Total Split (%)	15.6%	49.4%		23.9%	57.8%	26.7%		26.7%
Maximum Green (s)	19.7	80.0		35.5	95.0	40.0		40.0
Yellow Time (s)	3.1	5.2		3.6	5.2	3.5		3.5
All-Red Time (s)	5.2	3.8		3.9	3.8	4.5		4.5
Lost Time Adjust (s)	-3.3	-4.0		-2.5	-4.0	-3.0		-3.0
Total Lost Time (s)	5.0	5.0		5.0	5.0	5.0		5.0
Lead/Lag	Lag	Lead		Lag	Lead			
Lead-Lag Optimize?	Yes	Yes		Yes	Yes			
Vehicle Extension (s)	2.0	6.0		2.0	6.0	2.0		2.0
Minimum Gap (s)	0.2	3.0		0.2	3.0	0.2		0.2
Time Before Reduce (s)	0.0	15.0		0.0	15.0	0.0		0.0
Time To Reduce (s)	0.0	30.0		0.0	30.0	0.0		0.0
Recall Mode	None	C-Max		None	C-Max	None		None
Act Effct Green (s)	23.0	84.0	180.0	38.0	99.0	43.0	180.0	43.0
Actuated g/C Ratio	0.13	0.47	1.00	0.21	0.55	0.24	1.00	0.24
v/c Ratio	0.65	0.76	0.15	0.65	0.40	1.62	0.21	0.35
Control Delay	83.3	34.3	0.2	58.4	13.6	324.2	0.3	58.5
Queue Delay	0.0	14.2	0.0	1.9	0.8	9.6	0.0	0.0
Total Delay	83.3	48.5	0.2	60.2	14.4	333.8	0.3	58.5
LOS	F	D	A	E	B	F	A	E
Approach Delay		47.8			30.9			
Approach LOS		D			C			
Queue Length 50th (ft)	154	561	0	258	140	~1155	0	142
Queue Length 95th (ft)	208	647	0	327	151	#1292	0	190
Internal Link Dist (ft)		920			338			
Turn Bay Length (ft)	475							
Base Capacity (vph)	393	1536	1420	683	1976	820	1525	786
Starvation Cap Reductn	0	0	0	117	811	0	0	0
Spillback Cap Reductn	0	378	0	0	0	546	0	0
Storage Cap Reductn	0	0	0	0	0	0	0	0
Reduced v/c Ratio	0.65	1.00	0.15	0.78	0.67	4.84	0.21	0.35

Intersection Summary			
Area Type:	Other		
Cycle Length: 180			
Actuated Cycle Length: 180			
Offset: 0 (0%), Referenced to phase 2:EBT and 6:WBT, Start of Green, Master Intersection			
Natural Cycle: 150			
Control Type: Actuated-Coordinated			
Maximum v/c Ratio: 1.64			
Intersection Signal Delay: 120.3		Intersection LOS: F	
Intersection Capacity Utilization 86.8%		ICU Level of Service E	

DocuSign Envelope ID: 5C03745C-4B01-4834-A65D-B77F558A4F46

Analysis Period (min) 15

~ Volume exceeds capacity, queue is theoretically infinite.
Queue shown is maximum after two cycles.

95th percentile volume exceeds capacity, queue may be longer.
Queue shown is maximum after two cycles.

Splits and Phases: 10: I-26 Ramp & NC 146 (Long Shoals Rd)

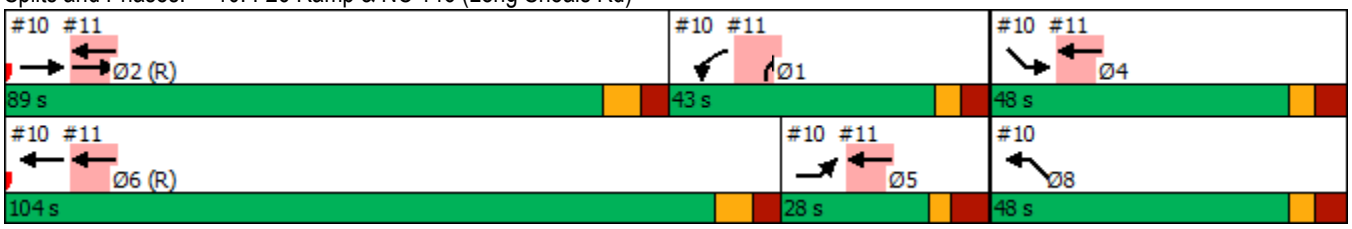

DocuSign Envelope ID: 5C03745C-4B01-4834-A65D-B77F558A4F46

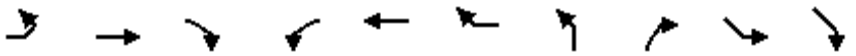

Lane Group	EBL	EBT	EBR	WBL	WBT	WBR	NBL	NBR	SEL	SER	Ø4	Ø5
Lane Configurations		↑↑			↑↑	↱		↱↱				
Traffic Volume (vph)	0	2240	0	0	1105	645	0	795	0	0		
Future Volume (vph)	0	2240	0	0	1105	645	0	795	0	0		
Ideal Flow (vphpl)	1900	1900	1900	1900	1900	1900	1900	1900	1900	1900		
Storage Length (ft)	0		0	0		275	0	0	0	0		
Storage Lanes	0		0	0		1	0	2	0	0		
Taper Length (ft)	25			25			25		25			
Lane Util. Factor	1.00	0.95	1.00	1.00	0.95	1.00	1.00	0.88	1.00	1.00		
Frt						0.850		0.850				
Flt Protected												
Satd. Flow (prot)	0	3471	0	0	3471	1442	0	2733	0	0		
Flt Permitted												
Satd. Flow (perm)	0	3471	0	0	3471	1442	0	2733	0	0		
Right Turn on Red			No			No		No				
Satd. Flow (RTOR)												
Link Speed (mph)		45			45		45		45			
Link Distance (ft)		418			593		396		464			
Travel Time (s)		6.3			9.0		6.0		7.0			
Peak Hour Factor	0.90	0.90	0.90	0.90	0.90	0.90	0.90	0.90	0.90	0.90		
Heavy Vehicles (%)	2%	4%	2%	2%	4%	12%	2%	4%	2%	2%		
Adj. Flow (vph)	0	2489	0	0	1228	717	0	883	0	0		
Shared Lane Traffic (%)												
Lane Group Flow (vph)	0	2489	0	0	1228	717	0	883	0	0		
Enter Blocked Intersection	No	No	No	No	No	No	No	No	No	No		
Lane Alignment	Left	L NA	Right	Left	Right	Right	Left	R NA	Left	Right		
Median Width(ft)		0			24		0		0			
Link Offset(ft)		0			0		0		0			
Crosswalk Width(ft)		16			16		16		16			
Two way Left Turn Lane												
Headway Factor	1.00	1.00	1.00	1.00	1.00	1.00	1.00	1.00	1.00	1.00		
Turning Speed (mph)	15		9	15		9	15	9	15	9		
Number of Detectors		2			2	1		1				
Detector Template		Thru			Thru	Right		Right				
Leading Detector (ft)		100			100	20		20				
Trailing Detector (ft)		0			0	0		0				
Detector 1 Position(ft)		0			0	0		0				
Detector 1 Size(ft)		6			6	20		20				
Detector 1 Type		Cl+Ex			Cl+Ex	Cl+Ex		Cl+Ex				
Detector 1 Channel												
Detector 1 Extend (s)		0.0			0.0	0.0		0.0				
Detector 1 Queue (s)		0.0			0.0	0.0		0.0				
Detector 1 Delay (s)		0.0			0.0	0.0		0.0				
Detector 2 Position(ft)		94			94							
Detector 2 Size(ft)		6			6							
Detector 2 Type		Cl+Ex			Cl+Ex							
Detector 2 Channel												
Detector 2 Extend (s)		0.0			0.0							
Turn Type		NA			NA	Free		Prot				
Protected Phases		2			2 4 5 6			1			4	5

DocuSign Envelope ID: 5C03745C-4B01-4834-A65D-B77F558A4F46

Lane Group	Ø6	Ø8
Lane Configurations		
Traffic Volume (vph)		
Future Volume (vph)		
Ideal Flow (vphpl)		
Storage Length (ft)		
Storage Lanes		
Taper Length (ft)		
Lane Util. Factor		
Frt		
Flt Protected		
Satd. Flow (prot)		
Flt Permitted		
Satd. Flow (perm)		
Right Turn on Red		
Satd. Flow (RTOR)		
Link Speed (mph)		
Link Distance (ft)		
Travel Time (s)		
Peak Hour Factor		
Heavy Vehicles (%)		
Adj. Flow (vph)		
Shared Lane Traffic (%)		
Lane Group Flow (vph)		
Enter Blocked Intersection		
Lane Alignment		
Median Width(ft)		
Link Offset(ft)		
Crosswalk Width(ft)		
Two way Left Turn Lane		
Headway Factor		
Turning Speed (mph)		
Number of Detectors		
Detector Template		
Leading Detector (ft)		
Trailing Detector (ft)		
Detector 1 Position(ft)		
Detector 1 Size(ft)		
Detector 1 Type		
Detector 1 Channel		
Detector 1 Extend (s)		
Detector 1 Queue (s)		
Detector 1 Delay (s)		
Detector 2 Position(ft)		
Detector 2 Size(ft)		
Detector 2 Type		
Detector 2 Channel		
Detector 2 Extend (s)		
Turn Type		
Protected Phases	6	8

DocuSign Envelope ID: 5C03745C-4B01-4834-A65D-B77F558A4F46

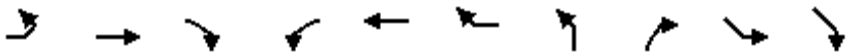

Lane Group	EBL	EBT	EBR	WBL	WBT	WBR	NBL	NBR	SEL	SER	Ø4	Ø5
Permitted Phases						Free						
Detector Phase		2			2 4 5 6			1				
Switch Phase												
Minimum Initial (s)		12.0						7.0			7.0	7.0
Minimum Split (s)		21.0						14.5			15.0	15.3
Total Split (s)		89.0						43.0			48.0	28.0
Total Split (%)		49.4%						23.9%			27%	16%
Maximum Green (s)		80.0						35.5			40.0	19.7
Yellow Time (s)		5.2						3.6			3.5	3.1
All-Red Time (s)		3.8						3.9			4.5	5.2
Lost Time Adjust (s)		0.0						0.0				
Total Lost Time (s)		9.0						7.5				
Lead/Lag		Lead						Lag				Lag
Lead-Lag Optimize?		Yes						Yes				Yes
Vehicle Extension (s)		6.0						2.0			2.0	2.0
Minimum Gap (s)		3.0						0.2			0.2	0.2
Time Before Reduce (s)		15.0						0.0			0.0	0.0
Time To Reduce (s)		30.0						0.0			0.0	0.0
Recall Mode		C-Max						None			None	None
Act Effct Green (s)		80.0			180.0	180.0		35.5				
Actuated g/C Ratio		0.44			1.00	1.00		0.20				
v/c Ratio		1.61			0.35	0.50		1.64				
Control Delay		304.8			0.1	0.9		336.7				
Queue Delay		0.8			0.0	0.0		6.5				
Total Delay		305.6			0.1	0.9		343.2				
LOS		F			A	A		F				
Approach Delay		305.6			0.4		343.2					
Approach LOS		F			A		F					
Queue Length 50th (ft)		~2240			0	0		~852				
Queue Length 95th (ft)		m#1628			m0	m0		#1003				
Internal Link Dist (ft)		338			513		316		384			
Turn Bay Length (ft)						275						
Base Capacity (vph)		1542			3471	1442		539				
Starvation Cap Reductn		67			0	0		0				
Spillback Cap Reductn		289			41	0		258				
Storage Cap Reductn		0			0	0		0				
Reduced v/c Ratio		1.99			0.36	0.50		3.14				

Intersection Summary			
Area Type:	Other		
Cycle Length: 180			
Actuated Cycle Length: 180			
Offset: 0 (0%), Referenced to phase 2:EBT and 6:WBT, Start of Green, Master Intersection			
Natural Cycle: 150			
Control Type: Actuated-Coordinated			
Maximum v/c Ratio: 1.64			
Intersection Signal Delay: 200.2		Intersection LOS: F	
Intersection Capacity Utilization 103.5%		ICU Level of Service G	
Analysis Period (min) 15			

DocuSign Envelope ID: 5C03745C-4B01-4834-A65D-B77F558A4F46

Lane Group	Ø6	Ø8
Permitted Phases		
Detector Phase		
Switch Phase		
Minimum Initial (s)	12.0	7.0
Minimum Split (s)	21.0	15.0
Total Split (s)	104.0	48.0
Total Split (%)	58%	27%
Maximum Green (s)	95.0	40.0
Yellow Time (s)	5.2	3.5
All-Red Time (s)	3.8	4.5
Lost Time Adjust (s)		
Total Lost Time (s)		
Lead/Lag	Lead	
Lead-Lag Optimize?	Yes	
Vehicle Extension (s)	6.0	2.0
Minimum Gap (s)	3.0	0.2
Time Before Reduce (s)	15.0	0.0
Time To Reduce (s)	30.0	0.0
Recall Mode	C-Max	None
Act Effct Green (s)		
Actuated g/C Ratio		
v/c Ratio		
Control Delay		
Queue Delay		
Total Delay		
LOS		
Approach Delay		
Approach LOS		
Queue Length 50th (ft)		
Queue Length 95th (ft)		
Internal Link Dist (ft)		
Turn Bay Length (ft)		
Base Capacity (vph)		
Starvation Cap Reductn		
Spillback Cap Reductn		
Storage Cap Reductn		
Reduced v/c Ratio		

Intersection Summary

DocuSign Envelope ID: 5C03745C-4B01-4834-A65D-B77F558A4F46

~ Volume exceeds capacity, queue is theoretically infinite.
Queue shown is maximum after two cycles.

95th percentile volume exceeds capacity, queue may be longer.
Queue shown is maximum after two cycles.

m Volume for 95th percentile queue is metered by upstream signal.

Splits and Phases: 11: I-26 NWB Ramp & NC 146 (Long Shoals Rd)

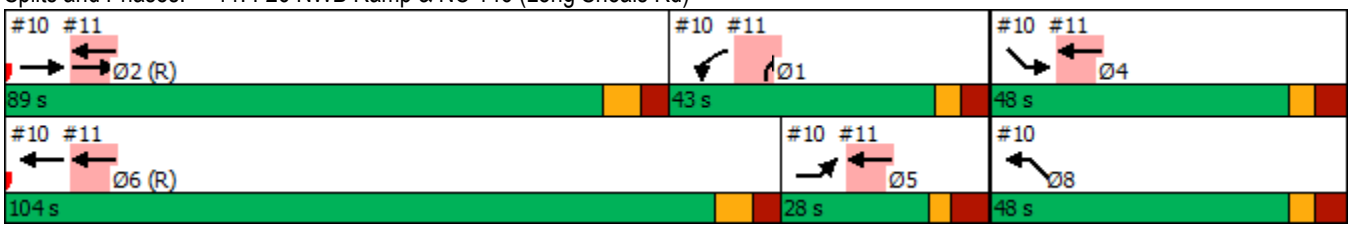

DocuSign Envelope ID: 5C03745C-4B01-4834-A65D-B77F558A4F46

Lane Group	EBL	EBT	EBR	WBL	WBT	WBR	NBL	NBT	NBR	SBL	SBT	SBR
Lane Configurations												
Traffic Volume (vph)	856	2037	142	26	1223	391	51	27	15	357	43	476
Future Volume (vph)	856	2037	142	26	1223	391	51	27	15	357	43	476
Ideal Flow (vphpl)	1900	1900	1900	1900	1900	1900	1900	1900	1900	1900	1900	1900
Grade (%)		6%			-6%			11%			7%	
Storage Length (ft)	350		400	250		225	0		0	450		0
Storage Lanes	2		1	1		1	0		0	1		1
Taper Length (ft)	25			25			25			25		
Lane Util. Factor	0.97	0.95	1.00	1.00	0.95	1.00	1.00	1.00	1.00	0.95	0.95	1.00
Frt			0.850			0.850		0.978				0.850
Flt Protected	0.950			0.950				0.973		0.950	0.962	
Satd. Flow (prot)	3266	3367	1506	1788	3575	1599	0	1627	0	1561	1581	1470
Flt Permitted	0.950			0.950				0.973		0.950	0.962	
Satd. Flow (perm)	3266	3367	1506	1788	3575	1599	0	1627	0	1561	1581	1470
Right Turn on Red			No			No			No			No
Satd. Flow (RTOR)												
Link Speed (mph)		45			45			25			25	
Link Distance (ft)		593			1582			722			992	
Travel Time (s)		9.0			24.0			19.7			27.1	
Peak Hour Factor	0.90	0.90	0.90	0.90	0.90	0.90	0.90	0.90	0.90	0.90	0.90	0.90
Heavy Vehicles (%)	4%	4%	4%	4%	4%	4%	5%	5%	5%	6%	6%	6%
Adj. Flow (vph)	951	2263	158	29	1359	434	57	30	17	397	48	529
Shared Lane Traffic (%)										44%		
Lane Group Flow (vph)	951	2263	158	29	1359	434	0	104	0	222	223	529
Enter Blocked Intersection	No	No	No	No	No	No	No	No	No	No	No	No
Lane Alignment	Left	Left	Right	Left	Left	Right	Left	Left	Right	Left	Left	Right
Median Width(ft)		24			24			0			12	
Link Offset(ft)		0			0			0			0	
Crosswalk Width(ft)		16			16			16			16	
Two way Left Turn Lane												
Headway Factor	1.04	1.04	1.04	0.96	0.96	0.96	1.08	1.08	1.08	1.05	1.05	1.05
Turning Speed (mph)	15		9	15		9	15		9	15		9
Number of Detectors	1	2	1	1	2	1	1	2		1	2	1
Detector Template	Left	Thru	Right	Left	Thru	Right	Left	Thru		Left	Thru	Right
Leading Detector (ft)	20	100	20	20	100	20	20	100		20	100	20
Trailing Detector (ft)	0	0	0	0	0	0	0	0		0	0	0
Detector 1 Position(ft)	0	0	0	0	0	0	0	0		0	0	0
Detector 1 Size(ft)	20	6	20	20	6	20	20	6		20	6	20
Detector 1 Type	Cl+Ex	Cl+Ex	Cl+Ex	Cl+Ex	Cl+Ex	Cl+Ex	Cl+Ex	Cl+Ex		Cl+Ex	Cl+Ex	Cl+Ex
Detector 1 Channel												
Detector 1 Extend (s)	0.0	0.0	0.0	0.0	0.0	0.0	0.0	0.0		0.0	0.0	0.0
Detector 1 Queue (s)	0.0	0.0	0.0	0.0	0.0	0.0	0.0	0.0		0.0	0.0	0.0
Detector 1 Delay (s)	0.0	0.0	0.0	0.0	0.0	0.0	0.0	0.0		0.0	0.0	0.0
Detector 2 Position(ft)		94			94			94			94	
Detector 2 Size(ft)		6			6			6			6	
Detector 2 Type		Cl+Ex			Cl+Ex			Cl+Ex			Cl+Ex	
Detector 2 Channel												
Detector 2 Extend (s)		0.0			0.0			0.0			0.0	
Turn Type	Prot	NA	pm+ov	Prot	NA	pm+ov	Split	NA		Split	NA	pm+ov

DocuSign Envelope ID: 5C03745C-4B01-4834-A65D-B77F558A4F46

Lane Group	EBL	EBT	EBR	WBL	WBT	WBR	NBL	NBT	NBR	SBL	SBT	SBR
Protected Phases	5	2	4	1	6	3	4	4		3	3	5
Permitted Phases			2			6						3
Detector Phase	5	2	4	1	6	3	4	4		3	3	5
Switch Phase												
Minimum Initial (s)	7.0	12.0	7.0	7.0	12.0	7.0	7.0	7.0		7.0	7.0	7.0
Minimum Split (s)	13.3	20.7	39.3	13.3	32.6	13.4	39.3	39.3		13.4	13.4	13.3
Total Split (s)	58.0	120.0	16.0	14.0	76.0	30.0	16.0	16.0		30.0	30.0	58.0
Total Split (%)	32.2%	66.7%	8.9%	7.8%	42.2%	16.7%	8.9%	8.9%		16.7%	16.7%	32.2%
Maximum Green (s)	51.7	114.3	9.7	7.7	69.4	23.6	9.7	9.7		23.6	23.6	51.7
Yellow Time (s)	3.0	4.1	3.0	3.1	5.1	3.0	3.0	3.0		3.0	3.0	3.0
All-Red Time (s)	3.3	1.6	3.3	3.2	1.5	3.4	3.3	3.3		3.4	3.4	3.3
Lost Time Adjust (s)	-1.3	-0.7	-1.3	-1.3	-1.6	-1.4		-1.3		-1.4	-1.4	-1.3
Total Lost Time (s)	5.0	5.0	5.0	5.0	5.0	5.0		5.0		5.0	5.0	5.0
Lead/Lag	Lag	Lag	Lead	Lead	Lead	Lag	Lead	Lead		Lag	Lag	Lag
Lead-Lag Optimize?	Yes	Yes	Yes	Yes	Yes	Yes	Yes	Yes		Yes	Yes	Yes
Vehicle Extension (s)	3.0	6.0	3.0	2.0	6.0	3.0	3.0	3.0		3.0	3.0	3.0
Minimum Gap (s)	0.2	3.0	0.2	0.2	3.0	0.2	0.2	0.2		0.2	0.2	0.2
Time Before Reduce (s)	0.0	20.0	0.0	0.0	20.0	0.0	0.0	0.0		0.0	0.0	0.0
Time To Reduce (s)	0.0	30.0	0.0	0.0	30.0	0.0	0.0	0.0		0.0	0.0	0.0
Recall Mode	None	C-Max	None	None	C-Max	None	None	None		None	None	None
Walk Time (s)		7.0	7.0		7.0		7.0	7.0				
Flash Dont Walk (s)		8.0	26.0		19.0		26.0	26.0				
Pedestrian Calls (#/hr)		0	0		0		0	0				
Act Effct Green (s)	53.0	118.0	134.0	8.6	71.0	101.0		11.0		25.0	25.0	78.0
Actuated g/C Ratio	0.29	0.66	0.74	0.05	0.39	0.56		0.06		0.14	0.14	0.43
v/c Ratio	0.99	1.03	0.14	0.34	0.96	0.48		1.05		1.03	1.02	0.83
Control Delay	47.0	24.5	0.4	93.9	69.5	26.1		180.4		141.1	138.8	43.7
Queue Delay	37.6	30.7	0.0	0.0	0.0	0.0		0.0		0.0	0.0	0.0
Total Delay	84.5	55.2	0.4	93.9	69.5	26.1		180.4		141.1	138.8	43.7
LOS	F	E	A	F	E	C		F		F	F	D
Approach Delay		60.9			59.6			180.4			87.7	
Approach LOS		E			E			F			F	
Queue Length 50th (ft)	564	~1514	6	34	825	302		~133		~292	~291	431
Queue Length 95th (ft)	m280	m92	m4	74	#980	400		#272		#490	#489	572
Internal Link Dist (ft)		513			1502			642			912	
Turn Bay Length (ft)	350		400	250		225				450		
Base Capacity (vph)	961	2207	1121	89	1410	897		99		216	219	637
Starvation Cap Reductn	123	637	0	0	0	0		0		0	0	0
Spillback Cap Reductn	0	0	0	0	0	0		0		0	0	0
Storage Cap Reductn	0	0	0	0	0	0		0		0	0	0
Reduced v/c Ratio	1.13	1.44	0.14	0.33	0.96	0.48		1.05		1.03	1.02	0.83

Intersection Summary	
Area Type:	Other
Cycle Length: 180	
Actuated Cycle Length: 180	
Offset: 18 (10%), Referenced to phase 2:EBT and 6:WBT, Start of Green	
Natural Cycle: 150	
Control Type: Actuated-Coordinated	

DocuSign Envelope ID: 5C03745C-4B01-4834-A65D-B77F558A4F46

Maximum v/c Ratio: 1.05	
Intersection Signal Delay: 66.7	Intersection LOS: E
Intersection Capacity Utilization 91.5%	ICU Level of Service F
Analysis Period (min) 15	

~ Volume exceeds capacity, queue is theoretically infinite.
Queue shown is maximum after two cycles.

95th percentile volume exceeds capacity, queue may be longer.
Queue shown is maximum after two cycles.

m Volume for 95th percentile queue is metered by upstream signal.

Splits and Phases: 12: Skyland Inn Dr/Schenck Pkwy & NC 146 (Long Shoals Rd)

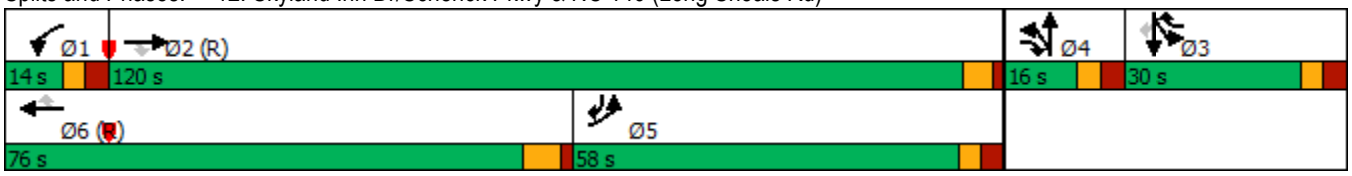

DocuSign Envelope ID: 5C03745C-4B01-4834-A65D-B77F558A4F46

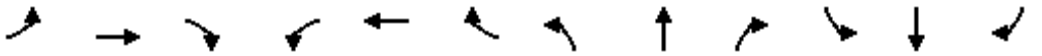

Lane Group	EBL	EBT	EBR	WBL	WBT	WBR	NBL	NBT	NBR	SBL	SBT	SBR
Lane Configurations												
Traffic Volume (vph)	211	307	121	219	278	440	66	54	132	185	37	81
Future Volume (vph)	211	307	121	219	278	440	66	54	132	185	37	81
Ideal Flow (vphpl)	1900	1900	1900	1900	1900	1900	1900	1900	1900	1900	1900	1900
Storage Length (ft)	0		200	0		200	0		200	0		200
Storage Lanes	0		1	0		1	0		1	0		1
Taper Length (ft)	25			25			25			25		
Lane Util. Factor	1.00	1.00	1.00	1.00	1.00	1.00	1.00	1.00	1.00	1.00	1.00	1.00
Frt			0.850			0.850			0.850			0.850
Flt Protected		0.980			0.978			0.973			0.960	
Satd. Flow (prot)	0	1773	1538	0	1770	1538	0	1795	1568	0	1754	1553
Flt Permitted		0.980			0.978			0.973			0.960	
Satd. Flow (perm)	0	1773	1538	0	1770	1538	0	1795	1568	0	1754	1553
Link Speed (mph)		35			35			35			35	
Link Distance (ft)		2787			1029			961			1055	
Travel Time (s)		54.3			20.0			18.7			20.6	
Peak Hour Factor	0.90	0.90	0.90	0.90	0.90	0.90	0.90	0.90	0.90	0.90	0.90	0.90
Heavy Vehicles (%)	5%	5%	5%	5%	5%	5%	3%	3%	3%	4%	4%	4%
Adj. Flow (vph)	234	341	134	243	309	489	73	60	147	206	41	90
Shared Lane Traffic (%)												
Lane Group Flow (vph)	0	575	134	0	552	489	0	133	147	0	247	90
Enter Blocked Intersection	No	No	No	No	No	No	No	No	No	No	No	No
Lane Alignment	Left	Left	Right	Left	Left	Right	Left	Left	Right	Left	Left	Right
Median Width(ft)		0			0			0			0	
Link Offset(ft)		0			0			0			0	
Crosswalk Width(ft)		16			16			16			16	
Two way Left Turn Lane												
Headway Factor	1.00	1.00	1.00	1.00	1.00	1.00	1.00	1.00	1.00	1.00	1.00	1.00
Turning Speed (mph)	15		9	15		9	15		9	15		9
Sign Control		Yield			Yield			Yield			Yield	

Intersection Summary			
Area Type:	Other		
Control Type: Roundabout			
Intersection Capacity Utilization 83.4%		ICU Level of Service E	
Analysis Period (min) 15			

DocuSign Envelope ID: 5C03745C-4B01-4834-A65D-B77F558A4F46

Lane Group	NBL	NBR	SET	SER	NWL	NWT
Lane Configurations						
Traffic Volume (vph)	0	0	0	414	0	384
Future Volume (vph)	0	0	0	414	0	384
Ideal Flow (vphpl)	1900	1900	1900	1900	1900	1900
Lane Util. Factor	1.00	1.00	1.00	*1.00	1.00	0.91
Frt						
Flt Protected						
Satd. Flow (prot)	0	0	0	3393	0	4893
Flt Permitted						
Satd. Flow (perm)	0	0	0	3393	0	4893
Link Speed (mph)	45		45			25
Link Distance (ft)	263		323			131
Travel Time (s)	4.0		4.9			3.6
Peak Hour Factor	0.90	0.90	0.90	0.90	0.90	0.90
Heavy Vehicles (%)	2%	2%	2%	12%	2%	6%
Adj. Flow (vph)	0	0	0	460	0	427
Shared Lane Traffic (%)						
Lane Group Flow (vph)	0	0	0	460	0	427
Enter Blocked Intersection	No	No	No	No	No	No
Lane Alignment	Left	Right	Left	Right	Left	Left
Median Width(ft)	0		8			0
Link Offset(ft)	0		0			0
Crosswalk Width(ft)	16		16			16
Two way Left Turn Lane						
Headway Factor	1.00	1.00	1.00	1.00	1.00	1.00
Turning Speed (mph)	15	9		45	15	
Sign Control	Free		Free			Free

Intersection Summary			
Area Type:	Other		
Control Type: Unsignalized			
Intersection Capacity Utilization 17.8%		ICU Level of Service A	
Analysis Period (min) 15			

* User Entered Value

DocuSign Envelope ID: 5C03745C-4B01-4834-A65D-B77F558A4F46

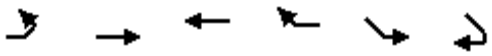

Lane Group	EBL	EBT	WBT	WBR	SEL	SER
Lane Configurations						
Traffic Volume (vph)	0	567	0	261	0	0
Future Volume (vph)	0	567	0	261	0	0
Ideal Flow (vphpl)	1900	1900	1900	1900	1900	1900
Grade (%)		2%	0%		0%	
Lane Util. Factor	1.00	1.00	1.00	*1.00	1.00	1.00
Frt						
Flt Protected						
Satd. Flow (prot)	0	1758	0	3393	0	0
Flt Permitted						
Satd. Flow (perm)	0	1758	0	3393	0	0
Link Speed (mph)		25	45		45	
Link Distance (ft)		718	860		674	
Travel Time (s)		19.6	13.0		10.2	
Peak Hour Factor	0.90	0.90	0.90	0.90	0.90	0.90
Heavy Vehicles (%)	2%	7%	2%	12%	2%	2%
Adj. Flow (vph)	0	630	0	290	0	0
Shared Lane Traffic (%)						
Lane Group Flow (vph)	0	630	0	290	0	0
Enter Blocked Intersection	No	No	No	No	No	No
Lane Alignment	Left	Left	Left	Right	Left	Right
Median Width(ft)		0	12		0	
Link Offset(ft)		0	0		0	
Crosswalk Width(ft)		16	16		16	
Two way Left Turn Lane						
Headway Factor	1.01	1.01	1.00	1.00	1.00	1.00
Turning Speed (mph)	15			45	15	9
Sign Control		Free	Free		Free	

Intersection Summary			
Area Type:	Other		
Control Type: Unsignalized			
Intersection Capacity Utilization 33.2%		ICU Level of Service A	
Analysis Period (min) 15			
* User Entered Value			

DocuSign Envelope ID: 5C03745C-4B01-4834-A65D-B77F558A4F46



Lane Group	EBT	EBR	WBL	WBT	NBL	NBR
Lane Configurations						
Traffic Volume (vph)	0	0	0	645	230	0
Future Volume (vph)	0	0	0	645	230	0
Ideal Flow (vphpl)	1900	1900	1900	1900	1900	1900
Lane Util. Factor	1.00	1.00	1.00	1.00	*1.00	1.00
Frt						
Flt Protected						
Satd. Flow (prot)	0	0	0	1696	3393	0
Flt Permitted						
Satd. Flow (perm)	0	0	0	1696	3393	0
Link Speed (mph)	45			45	45	
Link Distance (ft)	408			464	376	
Travel Time (s)	6.2			7.0	5.7	
Peak Hour Factor	0.90	0.90	0.90	0.90	0.90	0.90
Heavy Vehicles (%)	2%	2%	2%	12%	12%	2%
Adj. Flow (vph)	0	0	0	717	256	0
Shared Lane Traffic (%)						
Lane Group Flow (vph)	0	0	0	717	256	0
Enter Blocked Intersection	No	No	No	No	No	No
Lane Alignment	Left	Right	Left	Left	Left	Right
Median Width(ft)	0			0	24	
Link Offset(ft)	0			0	0	
Crosswalk Width(ft)	16			16	16	
Two way Left Turn Lane						
Headway Factor	1.00	1.00	1.00	1.00	1.00	1.00
Turning Speed (mph)		9	15		45	9
Sign Control	Free			Yield	Free	

Intersection Summary			
Area Type:	Other		
Control Type: Unsignalized			
Intersection Capacity Utilization 47.2%		ICU Level of Service A	
Analysis Period (min) 15			

* User Entered Value

DocuSign Envelope ID: 5C03745C-4B01-4834-A65D-B77F558A4F46

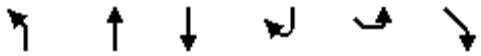

Lane Group	NBL	NBT	SBT	SBR	SEL	SER
Lane Configurations						
Traffic Volume (vph)	250	795	0	0	0	0
Future Volume (vph)	250	795	0	0	0	0
Ideal Flow (vphpl)	1900	1900	1900	1900	1900	1900
Lane Util. Factor	0.91	0.91	1.00	1.00	1.00	1.00
Frt						
Flt Protected	0.950	0.998				
Satd. Flow (prot)	1521	3314	0	0	0	0
Flt Permitted	0.950	0.998				
Satd. Flow (perm)	1521	3314	0	0	0	0
Link Speed (mph)		45	45		45	
Link Distance (ft)		214	396		556	
Travel Time (s)		3.2	6.0		8.4	
Peak Hour Factor	0.90	0.90	0.90	0.90	0.90	0.90
Heavy Vehicles (%)	8%	4%	2%	2%	2%	2%
Adj. Flow (vph)	278	883	0	0	0	0
Shared Lane Traffic (%)	10%					
Lane Group Flow (vph)	250	911	0	0	0	0
Enter Blocked Intersection	No	No	No	No	No	No
Lane Alignment	Right	R NA	Left	Right	Left	Right
Median Width(ft)		12	12		0	
Link Offset(ft)		0	0		0	
Crosswalk Width(ft)		16	16		16	
Two way Left Turn Lane						
Headway Factor	1.00	1.00	1.00	1.00	1.00	1.00
Turning Speed (mph)	45			9	15	9
Sign Control		Free	Free		Free	

Intersection Summary			
Area Type:	Other		
Control Type: Unsignalized			
Intersection Capacity Utilization 25.3%		ICU Level of Service A	
Analysis Period (min) 15			

DocuSign Envelope ID: 5C03745C-4B01-4834-A65D-B77F558A4F46

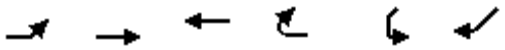

Lane Group	EBL	EBT	WBT	WBR	SWL	SWR
Lane Configurations						
Traffic Volume (vph)	331	302	0	0	0	0
Future Volume (vph)	331	302	0	0	0	0
Ideal Flow (vphpl)	1900	1900	1900	1900	1900	1900
Lane Util. Factor	1.00	1.00	1.00	1.00	1.00	1.00
Frt						
Flt Protected	0.950					
Satd. Flow (prot)	1719	1696	0	0	0	0
Flt Permitted	0.950					
Satd. Flow (perm)	1719	1696	0	0	0	0
Link Speed (mph)		35	35		35	
Link Distance (ft)		102	290		114	
Travel Time (s)		2.0	5.6		2.2	
Peak Hour Factor	0.90	0.90	0.90	0.90	0.90	0.90
Heavy Vehicles (%)	5%	12%	2%	2%	2%	2%
Adj. Flow (vph)	368	336	0	0	0	0
Shared Lane Traffic (%)						
Lane Group Flow (vph)	368	336	0	0	0	0
Enter Blocked Intersection	No	No	No	No	No	No
Lane Alignment	Left	Left	Left	Right	Left	Right
Median Width(ft)		12	12		0	
Link Offset(ft)		0	0		0	
Crosswalk Width(ft)		16	16		16	
Two way Left Turn Lane						
Headway Factor	1.00	1.00	1.00	1.00	1.00	1.00
Turning Speed (mph)	15			9	15	9
Sign Control		Free	Free		Free	

Intersection Summary			
Area Type:	Other		
Control Type: Unsignalized			
Intersection Capacity Utilization 49.8%		ICU Level of Service A	
Analysis Period (min) 15			

DocuSign Envelope ID: 5C03745C-4B01-4834-A65D-B77F558A4F46

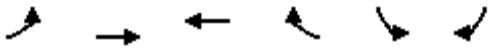

Lane Group	EBL	EBT	WBT	WBR	SBL	SBR
Lane Configurations						
Traffic Volume (vph)	0	331	0	0	1	0
Future Volume (vph)	0	331	0	0	1	0
Ideal Flow (vphpl)	1900	1900	1900	1900	1900	1900
Lane Util. Factor	1.00	1.00	1.00	1.00	1.00	1.00
Frt						
Flt Protected					0.950	
Satd. Flow (prot)	0	1696	0	0	1612	0
Flt Permitted					0.950	
Satd. Flow (perm)	0	1696	0	0	1612	0
Link Speed (mph)		35	35		35	
Link Distance (ft)		195	217		313	
Travel Time (s)		3.8	4.2		6.1	
Peak Hour Factor	0.90	0.90	0.90	0.90	0.90	0.90
Heavy Vehicles (%)	2%	12%	2%	2%	12%	2%
Adj. Flow (vph)	0	368	0	0	1	0
Shared Lane Traffic (%)						
Lane Group Flow (vph)	0	368	0	0	1	0
Enter Blocked Intersection	No	No	No	No	No	No
Lane Alignment	Left	Left	Left	Right	Left	Right
Median Width(ft)		0	0		12	
Link Offset(ft)		0	0		0	
Crosswalk Width(ft)		16	16		16	
Two way Left Turn Lane						
Headway Factor	1.00	1.00	1.00	1.00	1.00	1.00
Turning Speed (mph)	15			9	15	9
Sign Control		Free	Free		Yield	

Intersection Summary			
Area Type:	Other		
Control Type: Unsignalized			
Intersection Capacity Utilization 30.0%		ICU Level of Service A	
Analysis Period (min) 15			

DocuSign Envelope ID: 5C03745C-4B01-4834-A65D-B77F558A4F46

Lane Group	EBT	EBR	WBL	WBT	NEL	NER
Lane Configurations						
Traffic Volume (vph)	0	0	1	417	0	0
Future Volume (vph)	0	0	1	417	0	0
Ideal Flow (vphpl)	1900	1900	1900	1900	1900	1900
Lane Util. Factor	1.00	1.00	1.00	1.00	1.00	1.00
Frt						
Flt Protected						
Satd. Flow (prot)	0	0	0	1809	0	0
Flt Permitted						
Satd. Flow (perm)	0	0	0	1809	0	0
Link Speed (mph)	35			35	35	
Link Distance (ft)	100			205	150	
Travel Time (s)	1.9			4.0	2.9	
Peak Hour Factor	0.90	0.90	0.90	0.90	0.90	0.90
Heavy Vehicles (%)	2%	2%	12%	5%	2%	2%
Adj. Flow (vph)	0	0	1	463	0	0
Shared Lane Traffic (%)						
Lane Group Flow (vph)	0	0	0	464	0	0
Enter Blocked Intersection	No	No	No	No	No	No
Lane Alignment	Left	Right	Left	Left	Left	Right
Median Width(ft)	0			0	0	
Link Offset(ft)	0			0	0	
Crosswalk Width(ft)	16			16	16	
Two way Left Turn Lane						
Headway Factor	1.00	1.00	1.00	1.00	1.00	1.00
Turning Speed (mph)		9	15		15	9
Sign Control	Free			Free	Free	

Intersection Summary			
Area Type:	Other		
Control Type: Unsignalized			
Intersection Capacity Utilization 25.9%		ICU Level of Service A	
Analysis Period (min) 15			

DocuSign Envelope ID: 5C03745C-4B01-4834-A65D-B77F558A4F46



Lane Group	NBT	NBR	SBL	SBT	NWL	NWR
Lane Configurations						
Traffic Volume (vph)	0	0	1	506	0	0
Future Volume (vph)	0	0	1	506	0	0
Ideal Flow (vphpl)	1900	1900	1900	1900	1900	1900
Lane Util. Factor	1.00	1.00	1.00	1.00	1.00	1.00
Frt						
Flt Protected						
Satd. Flow (prot)	0	0	0	1863	0	0
Flt Permitted						
Satd. Flow (perm)	0	0	0	1863	0	0
Link Speed (mph)	35			35	35	
Link Distance (ft)	307			1240	313	
Travel Time (s)	6.0			24.2	6.1	
Peak Hour Factor	0.90	0.90	0.90	0.90	0.90	0.90
Adj. Flow (vph)	0	0	1	562	0	0
Shared Lane Traffic (%)						
Lane Group Flow (vph)	0	0	0	563	0	0
Enter Blocked Intersection	No	No	No	No	No	No
Lane Alignment	Left	Right	Left	Left	Left	Right
Median Width(ft)	0			0	0	
Link Offset(ft)	0			0	0	
Crosswalk Width(ft)	16			16	16	
Two way Left Turn Lane						
Headway Factor	1.00	1.00	1.00	1.00	1.00	1.00
Turning Speed (mph)		9	15		15	9
Sign Control	Stop			Free	Stop	

Intersection Summary			
Area Type:	Other		
Control Type: Unsignalized			
Intersection Capacity Utilization 30.0%		ICU Level of Service A	
Analysis Period (min) 15			

DocuSign Envelope ID: 5C03745C-4B01-4834-A65D-B77F558A4F46

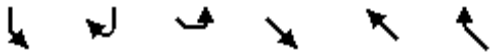

Lane Group	SBL	SBR	SEL	SET	NWT	NWR
Lane Configurations						
Traffic Volume (vph)	1	0	0	302	0	0
Future Volume (vph)	1	0	0	302	0	0
Ideal Flow (vphpl)	1900	1900	1900	1900	1900	1900
Lane Util. Factor	1.00	1.00	1.00	1.00	1.00	1.00
Frt						
Flt Protected	0.950					
Satd. Flow (prot)	1612	0	0	1696	0	0
Flt Permitted	0.950					
Satd. Flow (perm)	1612	0	0	1696	0	0
Link Speed (mph)	35			35	35	
Link Distance (ft)	150			290	741	
Travel Time (s)	2.9			5.6	14.4	
Peak Hour Factor	0.90	0.90	0.90	0.90	0.90	0.90
Heavy Vehicles (%)	12%	2%	2%	12%	2%	2%
Adj. Flow (vph)	1	0	0	336	0	0
Shared Lane Traffic (%)						
Lane Group Flow (vph)	1	0	0	336	0	0
Enter Blocked Intersection	No	No	No	No	No	No
Lane Alignment	Left	Right	Left	Left	Left	Right
Median Width(ft)	12			0	0	
Link Offset(ft)	0			0	0	
Crosswalk Width(ft)	16			16	16	
Two way Left Turn Lane						
Headway Factor	1.00	1.00	1.00	1.00	1.00	1.00
Turning Speed (mph)	15	9	15			9
Sign Control	Yield			Free	Stop	

Intersection Summary			
Area Type:	Other		
Control Type: Unsignalized			
Intersection Capacity Utilization 25.9%		ICU Level of Service A	
Analysis Period (min) 15			

DocuSign Envelope ID: 5C03745C-4B01-4834-A65D-B77F558A4F46

APPENDIX K

2045 Build DDI (Signalized EB Off-Ramp Terminal) PM Synchro Report

DocuSign Envelope ID: 5C03745C-4B01-4834-A65D-B77F558A4F46

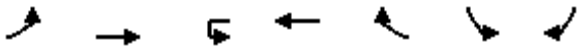

Lane Group	EBL	EBT	WBU	WBT	WBR	SBL	SBR
Lane Configurations							
Traffic Volume (vph)	94	1464	0	1180	106	106	76
Future Volume (vph)	94	1464	0	1180	106	106	76
Ideal Flow (vphpl)	1900	1900	1900	1900	1900	1900	1900
Storage Length (ft)	150		150		175	0	175
Storage Lanes	1		1		1	1	1
Taper Length (ft)	25		25			25	
Lane Util. Factor	1.00	0.95	1.00	0.95	1.00	1.00	1.00
Frt					0.850		0.850
Flt Protected	0.950					0.950	
Satd. Flow (prot)	1703	3406	1792	3406	1524	1703	1524
Flt Permitted	0.950					0.950	
Satd. Flow (perm)	1703	3406	1792	3406	1524	1703	1524
Right Turn on Red					No		No
Satd. Flow (RTOR)							
Link Speed (mph)		45		45		25	
Link Distance (ft)		1606		558		1108	
Travel Time (s)		24.3		8.5		30.2	
Peak Hour Factor	0.90	0.90	0.90	0.90	0.90	0.90	0.90
Heavy Vehicles (%)	6%	6%	6%	6%	6%	6%	6%
Adj. Flow (vph)	104	1627	0	1311	118	118	84
Shared Lane Traffic (%)							
Lane Group Flow (vph)	104	1627	0	1311	118	118	84
Enter Blocked Intersection	No	No	No	No	No	No	No
Lane Alignment	Left	Left	R NA	Left	Right	Left	Right
Median Width(ft)		12		12		12	
Link Offset(ft)		0		0		0	
Crosswalk Width(ft)		16		16		16	
Two way Left Turn Lane							
Headway Factor	1.00	1.00	1.00	1.00	1.00	1.00	1.00
Turning Speed (mph)	15		9		9	15	9
Number of Detectors	1	2	1	2	1	1	1
Detector Template	Left	Thru	Left	Thru	Right	Left	Right
Leading Detector (ft)	20	100	20	100	20	20	20
Trailing Detector (ft)	0	0	0	0	0	0	0
Detector 1 Position(ft)	0	0	0	0	0	0	0
Detector 1 Size(ft)	20	6	20	6	20	20	20
Detector 1 Type	Cl+Ex	Cl+Ex	Cl+Ex	Cl+Ex	Cl+Ex	Cl+Ex	Cl+Ex
Detector 1 Channel							
Detector 1 Extend (s)	0.0	0.0	0.0	0.0	0.0	0.0	0.0
Detector 1 Queue (s)	0.0	0.0	0.0	0.0	0.0	0.0	0.0
Detector 1 Delay (s)	0.0	0.0	0.0	0.0	0.0	0.0	0.0
Detector 2 Position(ft)		94		94			
Detector 2 Size(ft)		6		6			
Detector 2 Type		Cl+Ex		Cl+Ex			
Detector 2 Channel							
Detector 2 Extend (s)		0.0		0.0			
Turn Type	Prot	NA	Prot	NA	pm+ov	Prot	pm+ov
Protected Phases	5	2	1	6	4	4	5

DocuSign Envelope ID: 5C03745C-4B01-4834-A65D-B77F558A4F46

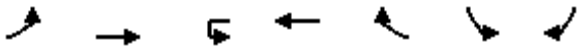

Lane Group	EBL	EBT	WBU	WBT	WBR	SBL	SBR
Permitted Phases					6		4
Detector Phase	5	2	1	6	4	4	5
Switch Phase							
Minimum Initial (s)	7.0	12.0	7.0	12.0	7.0	7.0	7.0
Minimum Split (s)	13.1	18.8	11.9	35.8	36.5	36.5	13.1
Total Split (s)	17.0	71.0	12.0	66.0	37.0	37.0	17.0
Total Split (%)	14.2%	59.2%	10.0%	55.0%	30.8%	30.8%	14.2%
Maximum Green (s)	10.9	64.2	7.1	59.2	30.5	30.5	10.9
Yellow Time (s)	3.0	4.9	3.0	4.9	3.0	3.0	3.0
All-Red Time (s)	3.1	1.9	1.9	1.9	3.5	3.5	3.1
Lost Time Adjust (s)	-1.1	-1.8	0.1	-1.8	-1.8	-1.5	-1.1
Total Lost Time (s)	5.0	5.0	5.0	5.0	4.7	5.0	5.0
Lead/Lag	Lag	Lag	Lead	Lead			Lag
Lead-Lag Optimize?	Yes	Yes	Yes	Yes			Yes
Vehicle Extension (s)	2.0	6.0	2.0	6.0	2.0	2.0	2.0
Minimum Gap (s)	0.2	3.0	0.2	3.0	0.2	0.2	0.2
Time Before Reduce (s)	0.0	15.0	0.0	15.0	0.0	0.0	0.0
Time To Reduce (s)	0.0	30.0	0.0	30.0	0.0	0.0	0.0
Recall Mode	None	C-Max	None	C-Max	None	None	None
Walk Time (s)				7.0	7.0	7.0	
Flash Dont Walk (s)				22.0	23.0	23.0	
Pedestrian Calls (#/hr)				0	0	0	
Act Effct Green (s)	12.0	95.8		78.8	98.3	14.2	31.2
Actuated g/C Ratio	0.10	0.80		0.66	0.82	0.12	0.26
v/c Ratio	0.61	0.60		0.59	0.09	0.59	0.21
Control Delay	67.9	6.2		10.4	1.3	61.2	35.0
Queue Delay	0.0	0.1		0.2	0.0	0.0	0.0
Total Delay	67.9	6.3		10.6	1.3	61.2	35.0
LOS	E	A		B	A	E	D
Approach Delay		10.0		9.9		50.3	
Approach LOS		B		A		D	
Queue Length 50th (ft)	78	207		265	8	88	51
Queue Length 95th (ft)	#146	326		307	m12	144	90
Internal Link Dist (ft)		1526		478		1028	
Turn Bay Length (ft)	150				175		175
Base Capacity (vph)	170	2718		2236	1248	454	396
Starvation Cap Reductn	0	0		271	0	0	0
Spillback Cap Reductn	0	244		0	0	0	0
Storage Cap Reductn	0	0		0	0	0	0
Reduced v/c Ratio	0.61	0.66		0.67	0.09	0.26	0.21

Intersection Summary	
Area Type:	Other
Cycle Length: 120	
Actuated Cycle Length: 120	
Offset: 111 (93%), Referenced to phase 2:EBT and 6:WBT, Start of Green	
Natural Cycle: 100	
Control Type: Actuated-Coordinated	
Maximum v/c Ratio: 0.61	

DocuSign Envelope ID: 5C03745C-4B01-4834-A65D-B77F558A4F46

Intersection Signal Delay: 12.4	Intersection LOS: B
Intersection Capacity Utilization 64.7%	ICU Level of Service C
Analysis Period (min) 15	

\# 95th percentile volume exceeds capacity, queue may be longer.
Queue shown is maximum after two cycles.
m Volume for 95th percentile queue is metered by upstream signal.

Splits and Phases: 1: NC 191 (Brevard Rd) & Commercial Access

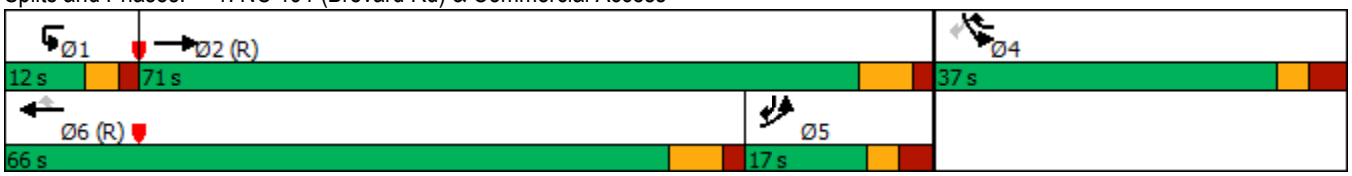

DocuSign Envelope ID: 5C03745C-4B01-4834-A65D-B77F558A4F46

Lane Group	EBT	EBR	WBL	WBT	NBL	NBR
Lane Configurations						
Traffic Volume (vph)	1329	241	321	973	313	66
Future Volume (vph)	1329	241	321	973	313	66
Ideal Flow (vphpl)	1900	1900	1900	1900	1900	1900
Grade (%)	-1%			-1%	0%	
Storage Length (ft)		225	200		0	0
Storage Lanes		1	1		2	1
Taper Length (ft)			25		25	
Lane Util. Factor	0.95	1.00	1.00	0.95	0.97	1.00
Frt		0.850				0.850
Flt Protected			0.950		0.950	
Satd. Flow (prot)	3423	1449	1620	3423	3303	1524
Flt Permitted			0.950		0.950	
Satd. Flow (perm)	3423	1449	1620	3423	3303	1524
Right Turn on Red		No				Yes
Satd. Flow (RTOR)						16
Link Speed (mph)	45			45	45	
Link Distance (ft)	558			1204	323	
Travel Time (s)	8.5			18.2	4.9	
Peak Hour Factor	0.90	0.90	0.90	0.90	0.90	0.90
Heavy Vehicles (%)	6%	12%	12%	6%	6%	6%
Adj. Flow (vph)	1477	268	357	1081	348	73
Shared Lane Traffic (%)						
Lane Group Flow (vph)	1477	268	357	1081	348	73
Enter Blocked Intersection	No	No	No	No	No	No
Lane Alignment	Left	Right	Left	Left	Left	Right
Median Width(ft)	12			12	40	
Link Offset(ft)	0			0	0	
Crosswalk Width(ft)	16			16	16	
Two way Left Turn Lane						
Headway Factor	0.99	0.99	0.99	0.99	1.00	1.00
Turning Speed (mph)		9	15		15	9
Number of Detectors	2	1	1	2	1	1
Detector Template	Thru	Right	Left	Thru	Left	Right
Leading Detector (ft)	100	20	20	100	20	20
Trailing Detector (ft)	0	0	0	0	0	0
Detector 1 Position(ft)	0	0	0	0	0	0
Detector 1 Size(ft)	6	20	20	6	20	20
Detector 1 Type	Cl+Ex	Cl+Ex	Cl+Ex	Cl+Ex	Cl+Ex	Cl+Ex
Detector 1 Channel						
Detector 1 Extend (s)	0.0	0.0	0.0	0.0	0.0	0.0
Detector 1 Queue (s)	0.0	0.0	0.0	0.0	0.0	0.0
Detector 1 Delay (s)	0.0	0.0	0.0	0.0	0.0	0.0
Detector 2 Position(ft)	94			94		
Detector 2 Size(ft)	6			6		
Detector 2 Type	Cl+Ex			Cl+Ex		
Detector 2 Channel						
Detector 2 Extend (s)	0.0			0.0		
Turn Type	NA	pm+ov	Prot	NA	Prot	pm+ov

DocuSign Envelope ID: 5C03745C-4B01-4834-A65D-B77F558A4F46



Lane Group	EBT	EBR	WBL	WBT	NBL	NBR
Protected Phases	2	4	1	6	4	1
Permitted Phases		2				4
Detector Phase	2	4	1	6	4	1
Switch Phase						
Minimum Initial (s)	12.0	7.0	10.0	12.0	7.0	10.0
Minimum Split (s)	18.0	13.9	16.3	18.6	13.9	16.3
Total Split (s)	62.0	21.0	37.0	99.0	21.0	37.0
Total Split (%)	51.7%	17.5%	30.8%	82.5%	17.5%	30.8%
Maximum Green (s)	56.0	14.1	30.7	92.4	14.1	30.7
Yellow Time (s)	4.4	3.0	3.0	4.7	3.0	3.0
All-Red Time (s)	1.6	3.9	3.3	1.9	3.9	3.3
Lost Time Adjust (s)	-1.0	-1.9	-1.3	-1.6	-1.9	-1.9
Total Lost Time (s)	5.0	5.0	5.0	5.0	5.0	4.4
Lead/Lag	Lead		Lag			Lag
Lead-Lag Optimize?	Yes		Yes			Yes
Vehicle Extension (s)	6.0	5.0	2.5	6.0	5.0	2.5
Minimum Gap (s)	3.0	0.2	0.2	3.0	0.2	0.2
Time Before Reduce (s)	15.0	0.0	0.0	15.0	0.0	0.0
Time To Reduce (s)	30.0	0.0	0.0	30.0	0.0	0.0
Recall Mode	C-Max	None	None	C-Max	None	None
Act Effct Green (s)	57.0	78.0	32.0	94.0	16.0	53.6
Actuated g/C Ratio	0.48	0.65	0.27	0.78	0.13	0.45
v/c Ratio	0.91	0.28	0.83	0.40	0.79	0.11
Control Delay	32.5	9.1	35.7	3.7	64.3	15.7
Queue Delay	2.5	0.0	0.0	0.0	0.0	0.0
Total Delay	35.0	9.1	35.7	3.7	64.3	15.7
LOS	C	A	D	A	E	B
Approach Delay	31.0			11.6	55.9	
Approach LOS	C			B	E	
Queue Length 50th (ft)	554	76	272	78	136	25
Queue Length 95th (ft)	#516	115	#425	90	#202	54
Internal Link Dist (ft)	478			1124	243	
Turn Bay Length (ft)		225	200			
Base Capacity (vph)	1625	941	432	2681	440	689
Starvation Cap Reductn	75	0	0	0	0	0
Spillback Cap Reductn	0	0	0	0	0	0
Storage Cap Reductn	0	0	0	0	0	0
Reduced v/c Ratio	0.95	0.28	0.83	0.40	0.79	0.11

Intersection Summary			
Area Type:	Other		
Cycle Length: 120			
Actuated Cycle Length: 120			
Offset: 77 (64%), Referenced to phase 2:EBT and 6:WBT, Start of Green			
Natural Cycle: 90			
Control Type: Actuated-Coordinated			
Maximum v/c Ratio: 0.91			
Intersection Signal Delay: 26.2		Intersection LOS: C	
Intersection Capacity Utilization 76.0%		ICU Level of Service D	

DocuSign Envelope ID: 5C03745C-4B01-4834-A65D-B77F558A4F46

Analysis Period (min) 15

\# 95th percentile volume exceeds capacity, queue may be longer.

Queue shown is maximum after two cycles.

Splits and Phases: 2: I-26 SEB Ramps & NC 191 (Brevard Rd)

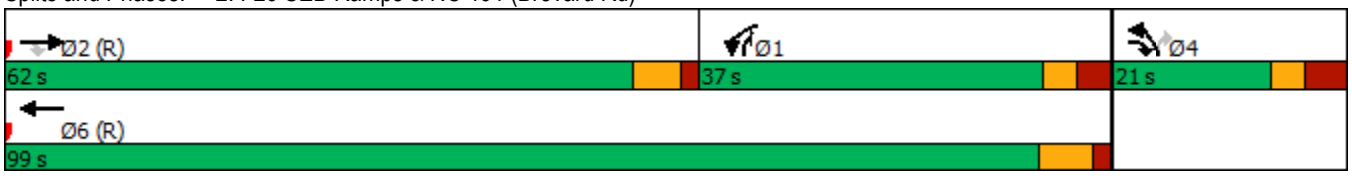

DocuSign Envelope ID: 5C03745C-4B01-4834-A65D-B77F558A4F46

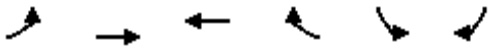

Lane Group	EBL	EBT	WBT	WBR	SBL	SBR
Lane Configurations						
Traffic Volume (vph)	336	1059	1092	55	345	202
Future Volume (vph)	336	1059	1092	55	345	202
Ideal Flow (vphpl)	1900	1900	1900	1900	1900	1900
Grade (%)		2%	-2%		2%	
Storage Length (ft)	625			200	0	400
Storage Lanes	2			1	2	1
Taper Length (ft)	25				25	
Lane Util. Factor	0.97	0.95	0.95	1.00	0.97	1.00
Frt				0.850		0.850
Flt Protected	0.950				0.950	
Satd. Flow (prot)	3095	3340	3408	1456	3240	1494
Flt Permitted	0.950				0.950	
Satd. Flow (perm)	3095	3340	3408	1456	3240	1494
Right Turn on Red				No		No
Satd. Flow (RTOR)						
Link Speed (mph)		45	45		45	
Link Distance (ft)		802	1565		860	
Travel Time (s)		12.2	23.7		13.0	
Peak Hour Factor	0.90	0.90	0.90	0.90	0.90	0.90
Heavy Vehicles (%)	12%	7%	7%	12%	7%	7%
Adj. Flow (vph)	373	1177	1213	61	383	224
Shared Lane Traffic (%)						
Lane Group Flow (vph)	373	1177	1213	61	383	224
Enter Blocked Intersection	No	No	No	No	No	No
Lane Alignment	Left	Left	Left	Right	Left	Right
Median Width(ft)		24	12		36	
Link Offset(ft)		0	0		0	
Crosswalk Width(ft)		16	16		16	
Two way Left Turn Lane						
Headway Factor	1.01	1.01	0.99	0.99	1.01	1.01
Turning Speed (mph)	15			9	15	9
Number of Detectors	1	2	2	1	1	1
Detector Template	Left	Thru	Thru	Right	Left	Right
Leading Detector (ft)	20	100	100	20	20	20
Trailing Detector (ft)	0	0	0	0	0	0
Detector 1 Position(ft)	0	0	0	0	0	0
Detector 1 Size(ft)	20	6	6	20	20	20
Detector 1 Type	Cl+Ex	Cl+Ex	Cl+Ex	Cl+Ex	Cl+Ex	Cl+Ex
Detector 1 Channel						
Detector 1 Extend (s)	0.0	0.0	0.0	0.0	0.0	0.0
Detector 1 Queue (s)	0.0	0.0	0.0	0.0	0.0	0.0
Detector 1 Delay (s)	0.0	0.0	0.0	0.0	0.0	0.0
Detector 2 Position(ft)		94	94			
Detector 2 Size(ft)		6	6			
Detector 2 Type		Cl+Ex	Cl+Ex			
Detector 2 Channel						
Detector 2 Extend (s)		0.0	0.0			
Turn Type	Prot	NA	NA	pm+ov	Prot	pm+ov

DocuSign Envelope ID: 5C03745C-4B01-4834-A65D-B77F558A4F46

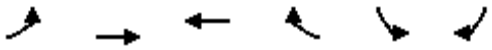

Lane Group	EBL	EBT	WBT	WBR	SBL	SBR
Protected Phases	5	2	6	4	4	5
Permitted Phases				6		4
Detector Phase	5	2	6	4	4	5
Switch Phase						
Minimum Initial (s)	7.0	12.0	12.0	7.0	7.0	7.0
Minimum Split (s)	14.0	19.0	25.0	25.0	25.0	14.0
Total Split (s)	28.0	93.0	65.0	27.0	27.0	28.0
Total Split (%)	23.3%	77.5%	54.2%	22.5%	22.5%	23.3%
Maximum Green (s)	21.0	86.0	58.0	20.0	20.0	21.0
Yellow Time (s)	5.0	5.0	5.0	5.0	5.0	5.0
All-Red Time (s)	2.0	2.0	2.0	2.0	2.0	2.0
Lost Time Adjust (s)	-2.0	-2.0	-2.0	-2.0	-2.0	-2.0
Total Lost Time (s)	5.0	5.0	5.0	5.0	5.0	5.0
Lead/Lag	Lag		Lead			Lag
Lead-Lag Optimize?	Yes		Yes			Yes
Vehicle Extension (s)	3.0	3.0	3.0	3.0	3.0	3.0
Minimum Gap (s)	0.2	3.0	3.0	0.2	0.2	0.2
Time Before Reduce (s)	0.0	15.0	15.0	0.0	0.0	0.0
Time To Reduce (s)	0.0	30.0	30.0	0.0	0.0	0.0
Recall Mode	None	C-Max	C-Max	None	None	None
Walk Time (s)			7.0	7.0	7.0	
Flash Dont Walk (s)			11.0	11.0	11.0	
Pedestrian Calls (#/hr)			0	0	0	
Act Effct Green (s)	23.0	89.8	61.8	87.0	20.2	48.2
Actuated g/C Ratio	0.19	0.75	0.52	0.72	0.17	0.40
v/c Ratio	0.63	0.47	0.69	0.06	0.70	0.37
Control Delay	18.2	1.1	24.9	4.9	54.4	27.1
Queue Delay	0.0	0.0	0.0	0.0	0.0	0.0
Total Delay	18.2	1.1	24.9	4.9	54.4	27.1
LOS	B	A	C	A	D	C
Approach Delay		5.2	23.9		44.3	
Approach LOS		A	C		D	
Queue Length 50th (ft)	122	20	366	12	144	118
Queue Length 95th (ft)	m123	m24	454	24	196	183
Internal Link Dist (ft)		722	1485		780	
Turn Bay Length (ft)	625			200		400
Base Capacity (vph)	593	2499	1755	1039	594	599
Starvation Cap Reductn	0	0	0	0	0	0
Spillback Cap Reductn	0	0	0	0	0	0
Storage Cap Reductn	0	0	0	0	0	0
Reduced v/c Ratio	0.63	0.47	0.69	0.06	0.64	0.37

Intersection Summary	
Area Type:	Other
Cycle Length: 120	
Actuated Cycle Length: 120	
Offset: 77 (64%), Referenced to phase 2:EBT and 6:WBT, Start of Green	
Natural Cycle: 75	
Control Type: Actuated-Coordinated	

DocuSign Envelope ID: 5C03745C-4B01-4834-A65D-B77F558A4F46

Maximum v/c Ratio: 0.70	
Intersection Signal Delay: 19.1	Intersection LOS: B
Intersection Capacity Utilization 62.1%	ICU Level of Service B
Analysis Period (min) 15	

m Volume for 95th percentile queue is metered by upstream signal.

Splits and Phases: 3: NC 191 (Brevard Rd) & I-26 NWB Ramps

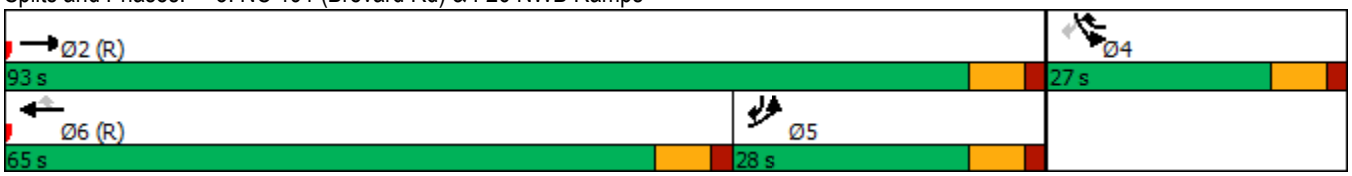

DocuSign Envelope ID: 5C03745C-4B01-4834-A65D-B77F558A4F46

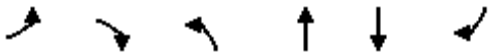

Lane Group	EBL	EBR	NBL	NBT	SBT	SBR
Lane Configurations						
Traffic Volume (vph)	94	17	14	247	193	56
Future Volume (vph)	94	17	14	247	193	56
Ideal Flow (vphpl)	1900	1900	1900	1900	1900	1900
Grade (%)	0%			0%	3%	
Storage Length (ft)	75	0	275			0
Storage Lanes	1	1	1			0
Taper Length (ft)	25		25			
Lane Util. Factor	1.00	1.00	1.00	1.00	1.00	1.00
Ped Bike Factor						
Frt		0.850			0.970	
Flt Protected	0.950		0.950			
Satd. Flow (prot)	1770	1583	1770	1863	1780	0
Flt Permitted	0.950		0.950			
Satd. Flow (perm)	1770	1583	1770	1863	1780	0
Link Speed (mph)	20			35	35	
Link Distance (ft)	1081			1059	248	
Travel Time (s)	36.9			20.6	4.8	
Confl. Bikes (#/hr)						159
Peak Hour Factor	0.90	0.90	0.90	0.90	0.90	0.90
Adj. Flow (vph)	104	19	16	274	214	62
Shared Lane Traffic (%)						
Lane Group Flow (vph)	104	19	16	274	276	0
Enter Blocked Intersection	No	No	No	No	No	No
Lane Alignment	Left	Right	Left	Left	Left	Right
Median Width(ft)	12			12	0	
Link Offset(ft)	0			0	0	
Crosswalk Width(ft)	16			16	16	
Two way Left Turn Lane						
Headway Factor	1.00	1.00	1.00	1.00	1.02	1.02
Turning Speed (mph)	15	9	15			9
Sign Control	Stop			Free	Free	

Intersection Summary			
Area Type:	Other		
Control Type: Unsignalized			
Intersection Capacity Utilization 25.4%		ICU Level of Service A	
Analysis Period (min) 15			

DocuSign Envelope ID: 5C03745C-4B01-4834-A65D-B77F558A4F46

Lane Group	EBL	EBT	EBR	WBL	WBT	WBR	NBL	NBT	NBR	SBL	SBT	SBR
Lane Configurations												
Traffic Volume (vph)	111	152	78	111	135	442	56	952	89	260	697	58
Future Volume (vph)	111	152	78	111	135	442	56	952	89	260	697	58
Ideal Flow (vphpl)	1900	1900	1900	1900	1900	1900	1900	1900	1900	1900	1900	1900
Grade (%)		3%			0%			2%			-7%	
Storage Length (ft)	0		0	200		0	175		150	200		0
Storage Lanes	1		0	1		1	1		1	2		0
Taper Length (ft)	25			25			25			25		
Lane Util. Factor	1.00	0.95	0.95	1.00	1.00	1.00	1.00	0.95	1.00	0.97	0.95	0.95
Frt		0.949				0.850			0.850		0.989	
Flt Protected	0.950			0.950			0.950			0.950		
Satd. Flow (prot)	1743	3308	0	1719	1810	1538	1686	3372	1508	3452	3519	0
Flt Permitted	0.950			0.950			0.950			0.950		
Satd. Flow (perm)	1743	3308	0	1719	1810	1538	1686	3372	1508	3452	3519	0
Right Turn on Red			No			No			No			No
Satd. Flow (RTOR)												
Link Speed (mph)		35			35			45			45	
Link Distance (ft)		248			1390			1589			1600	
Travel Time (s)		4.8			27.1			24.1			24.2	
Peak Hour Factor	0.90	0.90	0.90	0.90	0.90	0.90	0.90	0.90	0.90	0.90	0.90	0.90
Heavy Vehicles (%)	2%	2%	2%	5%	5%	5%	6%	6%	6%	5%	5%	5%
Adj. Flow (vph)	123	169	87	123	150	491	62	1058	99	289	774	64
Shared Lane Traffic (%)												
Lane Group Flow (vph)	123	256	0	123	150	491	62	1058	99	289	838	0
Enter Blocked Intersection	No	No	No	No	No	No	No	No	No	No	No	No
Lane Alignment	L NA	Left	Right	Left	Left	Left	Left	L NA	Right	Left	Left	Right
Median Width(ft)		12			12			24			24	
Link Offset(ft)		0			0			0			0	
Crosswalk Width(ft)		16			16			16			16	
Two way Left Turn Lane												
Headway Factor	1.02	1.02	1.02	1.00	1.00	1.00	1.01	1.01	1.01	0.96	0.96	0.96
Turning Speed (mph)	15		9	15		9	15		9	15		9
Number of Detectors	1	2		1	2	1	1	2	1	1	2	
Detector Template	Left	Thru		Left	Thru	Right	Left	Thru	Right	Left	Thru	
Leading Detector (ft)	20	100		20	100	20	20	100	20	20	100	
Trailing Detector (ft)	0	0		0	0	0	0	0	0	0	0	
Detector 1 Position(ft)	0	0		0	0	0	0	0	0	0	0	
Detector 1 Size(ft)	20	6		20	6	20	20	6	20	20	6	
Detector 1 Type	Cl+Ex	Cl+Ex		Cl+Ex	Cl+Ex	Cl+Ex	Cl+Ex	Cl+Ex	Cl+Ex	Cl+Ex	Cl+Ex	
Detector 1 Channel												
Detector 1 Extend (s)	0.0	0.0		0.0	0.0	0.0	0.0	0.0	0.0	0.0	0.0	
Detector 1 Queue (s)	0.0	0.0		0.0	0.0	0.0	0.0	0.0	0.0	0.0	0.0	
Detector 1 Delay (s)	0.0	0.0		0.0	0.0	0.0	0.0	0.0	0.0	0.0	0.0	
Detector 2 Position(ft)		94			94			94			94	
Detector 2 Size(ft)		6			6			6			6	
Detector 2 Type		Cl+Ex			Cl+Ex			Cl+Ex			Cl+Ex	
Detector 2 Channel												
Detector 2 Extend (s)		0.0			0.0			0.0			0.0	
Turn Type	Prot	NA		Prot	NA	pm+ov	Prot	NA	pm+ov	Prot	NA	

DocuSign Envelope ID: 5C03745C-4B01-4834-A65D-B77F558A4F46

Lane Group	EBL	EBT	EBR	WBL	WBT	WBR	NBL	NBT	NBR	SBL	SBT	SBR
Protected Phases	7	4		3	8	1	5	2	3	1	6	
Permitted Phases						8			2			
Detector Phase	7	4		3	8	1	5	2	3	1	6	
Switch Phase												
Minimum Initial (s)	7.0	7.0		7.0	7.0	7.0	7.0	12.0	7.0	7.0	12.0	
Minimum Split (s)	14.0	14.0		14.0	14.0	14.0	14.0	19.0	14.0	14.0	19.0	
Total Split (s)	17.0	18.0		17.0	18.0	34.0	15.0	51.0	17.0	34.0	70.0	
Total Split (%)	14.2%	15.0%		14.2%	15.0%	28.3%	12.5%	42.5%	14.2%	28.3%	58.3%	
Maximum Green (s)	10.0	11.0		10.0	11.0	27.0	8.0	44.0	10.0	27.0	63.0	
Yellow Time (s)	5.0	5.0		5.0	5.0	5.0	5.0	5.0	5.0	5.0	5.0	
All-Red Time (s)	2.0	2.0		2.0	2.0	2.0	2.0	2.0	2.0	2.0	2.0	
Lost Time Adjust (s)	-2.0	-2.0		-2.0	-2.0	-2.0	-2.0	-2.0	-2.0	-2.0	-2.0	
Total Lost Time (s)	5.0	5.0		5.0	5.0	5.0	5.0	5.0	5.0	5.0	5.0	
Lead/Lag	Lead	Lag		Lead	Lag	Lead	Lead	Lag	Lead	Lead	Lag	
Lead-Lag Optimize?	Yes	Yes		Yes	Yes	Yes	Yes	Yes	Yes	Yes	Yes	
Vehicle Extension (s)	3.0	3.0		3.0	3.0	3.0	3.0	3.0	3.0	3.0	3.0	
Minimum Gap (s)	3.0	3.0		3.0	3.0	3.0	3.0	3.0	3.0	3.0	3.0	
Time Before Reduce (s)	0.0	0.0		0.0	0.0	0.0	0.0	15.0	0.0	0.0	15.0	
Time To Reduce (s)	0.0	0.0		0.0	0.0	0.0	0.0	30.0	0.0	0.0	30.0	
Recall Mode	None	None		None	None	None	None	Min	None	None	Min	
Act Effct Green (s)	11.7	12.8		11.8	12.8	43.3	9.9	41.9	58.7	25.3	60.9	
Actuated g/C Ratio	0.10	0.11		0.11	0.11	0.39	0.09	0.37	0.52	0.23	0.54	
v/c Ratio	0.68	0.68		0.68	0.72	0.83	0.42	0.84	0.13	0.37	0.44	
Control Delay	70.0	59.3		70.9	70.7	45.2	61.1	39.6	14.8	38.6	16.8	
Queue Delay	0.0	0.0		0.0	0.0	0.0	0.0	0.0	0.0	0.0	0.0	
Total Delay	70.0	59.3		70.9	70.7	45.2	61.1	39.6	14.8	38.6	16.8	
LOS	E	E		E	E	D	E	D	B	D	B	
Approach Delay		62.8			54.3			38.7			22.4	
Approach LOS		E			D			D			C	
Queue Length 50th (ft)	94	102		94	115	336	46	383	38	95	197	
Queue Length 95th (ft)	#184	#150		#186	#219	#517	93	473	68	137	246	
Internal Link Dist (ft)		168			1310			1509			1520	
Turn Bay Length (ft)				200			175		150	200		
Base Capacity (vph)	189	388		186	213	649	152	1402	795	905	2068	
Starvation Cap Reductn	0	0		0	0	0	0	0	0	0	0	
Spillback Cap Reductn	0	0		0	0	0	0	0	0	0	0	
Storage Cap Reductn	0	0		0	0	0	0	0	0	0	0	
Reduced v/c Ratio	0.65	0.66		0.66	0.70	0.76	0.41	0.75	0.12	0.32	0.41	

Intersection Summary			
Area Type:	Other		
Cycle Length: 120			
Actuated Cycle Length: 112.1			
Natural Cycle: 80			
Control Type: Actuated-Uncoordinated			
Maximum v/c Ratio: 0.84			
Intersection Signal Delay: 39.4		Intersection LOS: D	
Intersection Capacity Utilization 72.3%		ICU Level of Service C	
Analysis Period (min) 15			

DocuSign Envelope ID: 5C03745C-4B01-4834-A65D-B77F558A4F46

95th percentile volume exceeds capacity, queue may be longer.
Queue shown is maximum after two cycles.

Splits and Phases: 5: NC 191 (Brevard Rd) & Blue Ridge Pkwy Access/NC 191 Connector

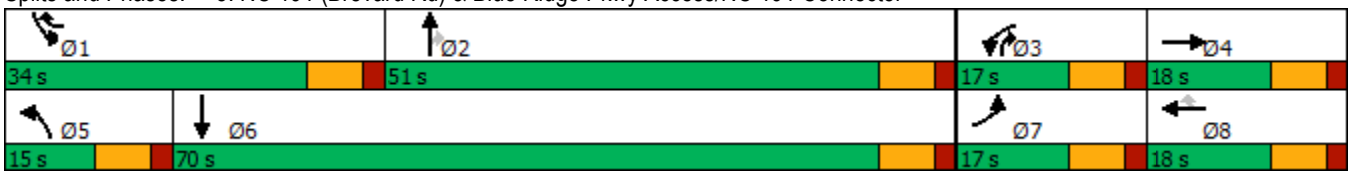

DocuSign Envelope ID: 5C03745C-4B01-4834-A65D-B77F558A4F46



Lane Group	EBL	EBT	EBR	WBL	WBT	WBR	SBL	SBR	NWL	NWR	Ø2
Lane Configurations											
Traffic Volume (vph)	0	0	958	0	360	0	0	435	0	0	
Future Volume (vph)	0	0	958	0	360	0	0	435	0	0	
Ideal Flow (vphpl)	1900	1900	1900	1900	1900	1900	1900	1900	1900	1900	
Lane Util. Factor	1.00	1.00	*0.95	1.00	1.00	1.00	1.00	1.00	1.00	1.00	
Frt								0.865			
Flt Protected											
Satd. Flow (prot)	0	0	3438	0	1810	0	0	1565	0	0	
Flt Permitted											
Satd. Flow (perm)	0	0	3438	0	1810	0	0	1565	0	0	
Right Turn on Red			No	No		No		No			
Satd. Flow (RTOR)											
Link Speed (mph)		35			35		35		35		
Link Distance (ft)		177			206		307		102		
Travel Time (s)		3.4			4.0		6.0		2.0		
Peak Hour Factor	0.90	0.90	0.90	0.90	0.90	0.90	0.90	0.90	0.90	0.90	
Heavy Vehicles (%)	2%	2%	5%	2%	5%	2%	2%	5%	2%	2%	
Adj. Flow (vph)	0	0	1064	0	400	0	0	483	0	0	
Shared Lane Traffic (%)											
Lane Group Flow (vph)	0	0	1064	0	400	0	0	483	0	0	
Enter Blocked Intersection	No	No	No	No	No	No	No	No	No	No	
Lane Alignment	Left	Left	Right	Left	Left	Right	Left	Right	Left	Right	
Median Width(ft)		0			0		0		0		
Link Offset(ft)		0			0		0		0		
Crosswalk Width(ft)		16			16		16		16		
Two way Left Turn Lane											
Headway Factor	1.00	1.00	1.00	1.00	1.00	1.00	1.00	1.00	1.00	1.00	
Turning Speed (mph)	15		35	15		9	15	9	15	9	
Number of Detectors			1		2			1			
Detector Template			Right		Thru			Right			
Leading Detector (ft)			20		100			20			
Trailing Detector (ft)			0		0			0			
Detector 1 Position(ft)			0		0			0			
Detector 1 Size(ft)			20		6			20			
Detector 1 Type			Cl+Ex		Cl+Ex			Cl+Ex			
Detector 1 Channel											
Detector 1 Extend (s)			0.0		0.0			0.0			
Detector 1 Queue (s)			0.0		0.0			0.0			
Detector 1 Delay (s)			0.0		0.0			0.0			
Detector 2 Position(ft)					94						
Detector 2 Size(ft)					6						
Detector 2 Type					Cl+Ex						
Detector 2 Channel											
Detector 2 Extend (s)					0.0						
Turn Type			Perm		NA			Prot			
Protected Phases					8			6			2
Permitted Phases			2 8								
Detector Phase			2 8		8			6			
Switch Phase											

DocuSign Envelope ID: 5C03745C-4B01-4834-A65D-B77F558A4F46

Lane Group	EBL	EBT	EBR	WBL	WBT	WBR	SBL	SBR	NWL	NWR	Ø2
Minimum Initial (s)					10.0			7.0			10.0
Minimum Split (s)					21.0			14.0			17.0
Total Split (s)					27.0			33.0			33.0
Total Split (%)					45.0%			55.0%			55%
Maximum Green (s)					16.0			26.0			26.0
Yellow Time (s)					5.0			5.0			5.0
All-Red Time (s)					6.0			2.0			2.0
Lost Time Adjust (s)					-5.0			-2.0			
Total Lost Time (s)					6.0			5.0			
Lead/Lag											
Lead-Lag Optimize?											
Vehicle Extension (s)					3.0			3.0			3.0
Recall Mode					Min			None			Min
Act Effct Green (s)			58.1		20.9			26.1			
Actuated g/C Ratio			1.00		0.36			0.45			
v/c Ratio			0.31		0.61			0.69			
Control Delay			0.2		6.8			18.7			
Queue Delay			0.0		0.0			0.0			
Total Delay			0.2		6.8			18.7			
LOS			A		A			B			
Approach Delay		0.2			6.8		18.7				
Approach LOS		A			A		B				
Queue Length 50th (ft)			0		11			126			
Queue Length 95th (ft)			0		35			222			
Internal Link Dist (ft)		97			126		227		22		
Turn Bay Length (ft)											
Base Capacity (vph)			3326		657			758			
Starvation Cap Reductn			0		0			0			
Spillback Cap Reductn			0		0			0			
Storage Cap Reductn			0		0			0			
Reduced v/c Ratio			0.32		0.61			0.64			

Intersection Summary			
Area Type:	Other		
Cycle Length: 60			
Actuated Cycle Length: 58.1			
Natural Cycle: 50			
Control Type: Actuated-Uncoordinated			
Maximum v/c Ratio: 0.69			
Intersection Signal Delay: 6.2		Intersection LOS: A	
Intersection Capacity Utilization 55.0%		ICU Level of Service B	
Analysis Period (min) 15			

* User Entered Value

Splits and Phases: 6: NC 191 Connector & HE-0001 SB Off Ramp

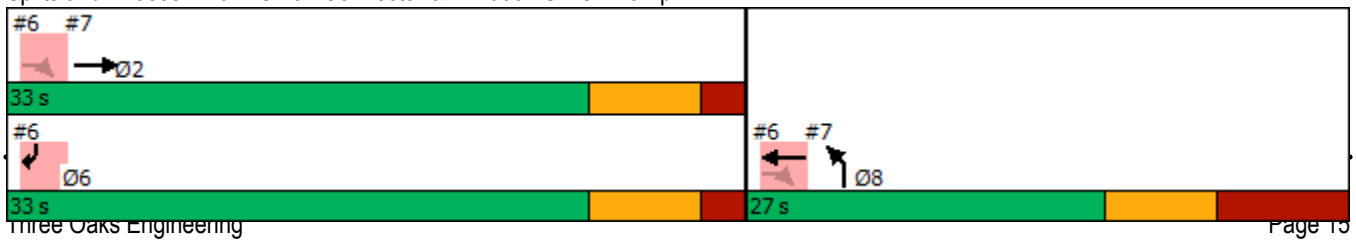

DocuSign Envelope ID: 5C03745C-4B01-4834-A65D-B77F558A4F46

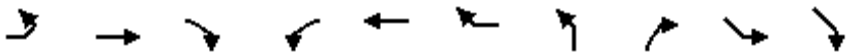

Lane Group	EBL	EBT	EBR	WBL	WBT	WBR	NBL	NBR	SEL	SER	Ø6
Lane Configurations											
Traffic Volume (vph)	0	499	0	0	0	0	360	0	0	0	
Future Volume (vph)	0	499	0	0	0	0	360	0	0	0	
Ideal Flow (vphpl)	1900	1900	1900	1900	1900	1900	1900	1900	1900	1900	
Lane Util. Factor	1.00	1.00	1.00	1.00	1.00	1.00	1.00	1.00	1.00	1.00	
Frt											
Flt Protected											
Satd. Flow (prot)	0	1810	0	0	0	0	1810	0	0	0	
Flt Permitted											
Satd. Flow (perm)	0	1810	0	0	0	0	1810	0	0	0	
Right Turn on Red	No		No			No		No			
Satd. Flow (RTOR)											
Link Speed (mph)		35			35		35		35		
Link Distance (ft)		114			195		160		206		
Travel Time (s)		2.2			3.8		3.1		4.0		
Peak Hour Factor	0.90	0.90	0.90	0.90	0.90	0.90	0.90	0.90	0.90	0.90	
Heavy Vehicles (%)	2%	5%	2%	2%	2%	2%	5%	2%	2%	2%	
Adj. Flow (vph)	0	554	0	0	0	0	400	0	0	0	
Shared Lane Traffic (%)											
Lane Group Flow (vph)	0	554	0	0	0	0	400	0	0	0	
Enter Blocked Intersection	No	No	No	No	No	No	No	No	No	No	
Lane Alignment	Left	Left	Right	Left	Left	Right	Left	Right	Left	Right	
Median Width(ft)		0			0		12		0		
Link Offset(ft)		0			0		0		0		
Crosswalk Width(ft)		16			16		16		16		
Two way Left Turn Lane											
Headway Factor	1.00	1.00	1.00	1.00	1.00	1.00	1.00	1.00	1.00	1.00	
Turning Speed (mph)	15		9	15		9	35	9	15	9	
Number of Detectors		2					1				
Detector Template		Thru					Left				
Leading Detector (ft)		100					20				
Trailing Detector (ft)		0					0				
Detector 1 Position(ft)		0					0				
Detector 1 Size(ft)		6					20				
Detector 1 Type		Cl+Ex					Cl+Ex				
Detector 1 Channel											
Detector 1 Extend (s)		0.0					0.0				
Detector 1 Queue (s)		0.0					0.0				
Detector 1 Delay (s)		0.0					0.0				
Detector 2 Position(ft)		94									
Detector 2 Size(ft)		6									
Detector 2 Type		Cl+Ex									
Detector 2 Channel											
Detector 2 Extend (s)		0.0									
Turn Type		NA					Prot				
Protected Phases		2					8				6
Permitted Phases											
Detector Phase		2					8				
Switch Phase											

DocuSign Envelope ID: 5C03745C-4B01-4834-A65D-B77F558A4F46

Lane Group	EBL	EBT	EBR	WBL	WBT	WBR	NBL	NBR	SEL	SER	Ø6
Minimum Initial (s)		10.0					10.0				7.0
Minimum Split (s)		17.0					21.0				14.0
Total Split (s)		33.0					27.0				33.0
Total Split (%)		55.0%					45.0%				55%
Maximum Green (s)		26.0					16.0				26.0
Yellow Time (s)		5.0					5.0				5.0
All-Red Time (s)		2.0					6.0				2.0
Lost Time Adjust (s)		-2.0					-5.0				
Total Lost Time (s)		5.0					6.0				
Lead/Lag											
Lead-Lag Optimize?											
Vehicle Extension (s)		3.0					3.0				3.0
Recall Mode		Min					Min				None
Act Effct Green (s)		26.1					20.9				
Actuated g/C Ratio		0.45					0.36				
v/c Ratio		0.68					0.61				
Control Delay		17.5					20.9				
Queue Delay		0.0					0.0				
Total Delay		17.5					20.9				
LOS		B					C				
Approach Delay		17.5					20.9				
Approach LOS		B					C				
Queue Length 50th (ft)		145					118				
Queue Length 95th (ft)		242					201				
Internal Link Dist (ft)		34			115		80		126		
Turn Bay Length (ft)											
Base Capacity (vph)		876					657				
Starvation Cap Reductn		0					0				
Spillback Cap Reductn		0					0				
Storage Cap Reductn		0					0				
Reduced v/c Ratio		0.63					0.61				

Intersection Summary			
Area Type:	Other		
Cycle Length: 60			
Actuated Cycle Length: 58.1			
Natural Cycle: 50			
Control Type: Actuated-Uncoordinated			
Maximum v/c Ratio: 0.69			
Intersection Signal Delay: 18.9		Intersection LOS: B	
Intersection Capacity Utilization 55.4%		ICU Level of Service B	
Analysis Period (min) 15			

Splits and Phases: 7: NC 191 Connector WB & NC 191 Connector EB

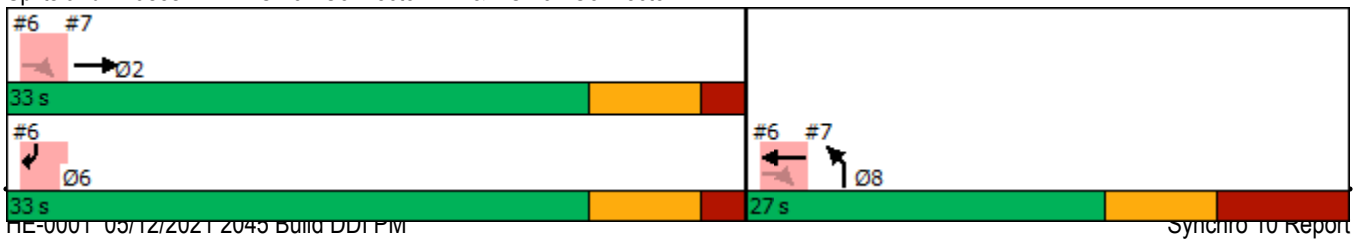

DocuSign Envelope ID: 5C03745C-4B01-4834-A65D-B77F558A4F46

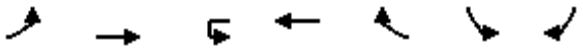

Lane Group	EBL	EBT	WBU	WBT	WBR	SBL	SBR
Lane Configurations							
Traffic Volume (vph)	62	629	0	701	412	368	62
Future Volume (vph)	62	629	0	701	412	368	62
Ideal Flow (vphpl)	1900	1900	1900	1900	1900	1900	1900
Grade (%)		-9%		5%		-9%	
Storage Length (ft)	500		350		0	0	400
Storage Lanes	1		1		1	2	1
Taper Length (ft)	25		25			25	
Lane Util. Factor	1.00	1.00	1.00	1.00	1.00	0.97	1.00
Frt					0.850		0.850
Flt Protected	0.950					0.950	
Satd. Flow (prot)	1715	1805	1715	1715	1458	3485	1607
Flt Permitted	0.950					0.950	
Satd. Flow (perm)	1715	1805	1715	1715	1458	3485	1607
Right Turn on Red					No		No
Satd. Flow (RTOR)							
Link Speed (mph)		35		35		45	
Link Distance (ft)		1579		1808		1089	
Travel Time (s)		30.8		35.2		16.5	
Peak Hour Factor	0.90	0.90	0.90	0.90	0.90	0.90	0.90
Heavy Vehicles (%)	10%	10%	8%	8%	8%	5%	5%
Adj. Flow (vph)	69	699	0	779	458	409	69
Shared Lane Traffic (%)							
Lane Group Flow (vph)	69	699	0	779	458	409	69
Enter Blocked Intersection	No	No	No	No	No	No	No
Lane Alignment	Left	Left	R NA	Left	Right	Left	Right
Median Width(ft)		12		12		24	
Link Offset(ft)		0		0		0	
Crosswalk Width(ft)		16		16		16	
Two way Left Turn Lane							
Headway Factor	0.94	0.94	1.03	1.03	1.03	0.94	0.94
Turning Speed (mph)	15		9		9	15	9
Number of Detectors	1	2	1	2	1	1	1
Detector Template	Left	Thru	Left	Thru	Right	Left	Right
Leading Detector (ft)	20	100	20	100	20	20	20
Trailing Detector (ft)	0	0	0	0	0	0	0
Detector 1 Position(ft)	0	0	0	0	0	0	0
Detector 1 Size(ft)	20	6	20	6	20	20	20
Detector 1 Type	Cl+Ex	Cl+Ex	Cl+Ex	Cl+Ex	Cl+Ex	Cl+Ex	Cl+Ex
Detector 1 Channel							
Detector 1 Extend (s)	0.0	0.0	0.0	0.0	0.0	0.0	0.0
Detector 1 Queue (s)	0.0	0.0	0.0	0.0	0.0	0.0	0.0
Detector 1 Delay (s)	0.0	0.0	0.0	0.0	0.0	0.0	0.0
Detector 2 Position(ft)		94		94			
Detector 2 Size(ft)		6		6			
Detector 2 Type		Cl+Ex		Cl+Ex			
Detector 2 Channel							
Detector 2 Extend (s)		0.0		0.0			
Turn Type	Prot	NA	Prot	NA	pm+ov	Prot	pm+ov

DocuSign Envelope ID: 5C03745C-4B01-4834-A65D-B77F558A4F46

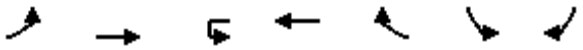

Lane Group	EBL	EBT	WBU	WBT	WBR	SBL	SBR
Protected Phases	5	2	1	6	4	4	5
Permitted Phases					6		4
Detector Phase	5	2	1	6	4	4	5
Switch Phase							
Minimum Initial (s)	7.0	10.0	7.0	10.0	7.0	7.0	7.0
Minimum Split (s)	13.7	17.3	13.3	17.3	13.8	13.8	13.7
Total Split (s)	18.0	112.0	14.0	108.0	34.0	34.0	18.0
Total Split (%)	11.3%	70.0%	8.8%	67.5%	21.3%	21.3%	11.3%
Maximum Green (s)	11.3	104.7	7.7	100.7	27.2	27.2	11.3
Yellow Time (s)	3.3	4.6	3.0	4.6	3.3	3.3	3.3
All-Red Time (s)	3.4	2.7	3.3	2.7	3.5	3.5	3.4
Lost Time Adjust (s)	-1.7	-2.3	-1.3	-2.3	-2.3	-1.8	-1.8
Total Lost Time (s)	5.0	5.0	5.0	5.0	4.5	5.0	4.9
Lead/Lag	Lead	Lead	Lag	Lag			Lead
Lead-Lag Optimize?	Yes	Yes	Yes	Yes			Yes
Vehicle Extension (s)	2.0	3.0	2.0	3.0	3.0	3.0	2.0
Recall Mode	None	C-Max	None	C-Max	None	None	None
Act Effct Green (s)	11.6	124.2		107.6	138.9	25.8	42.5
Actuated g/C Ratio	0.07	0.78		0.67	0.87	0.16	0.27
v/c Ratio	0.56	0.50		0.68	0.36	0.73	0.16
Control Delay	88.6	8.3		11.3	1.9	71.6	44.6
Queue Delay	0.0	0.0		0.0	0.0	0.0	0.0
Total Delay	88.6	8.3		11.3	1.9	71.6	44.6
LOS	F	A		B	A	E	D
Approach Delay		15.5		7.8		67.7	
Approach LOS		B		A		E	
Queue Length 50th (ft)	71	242		270	28	211	55
Queue Length 95th (ft)	128	341		336	78	267	97
Internal Link Dist (ft)		1499		1728		1009	
Turn Bay Length (ft)	500						400
Base Capacity (vph)	139	1401		1153	1294	631	441
Starvation Cap Reductn	0	0		0	0	0	0
Spillback Cap Reductn	0	0		0	0	0	0
Storage Cap Reductn	0	0		0	0	0	0
Reduced v/c Ratio	0.50	0.50		0.68	0.35	0.65	0.16

Intersection Summary			
Area Type:	Other		
Cycle Length: 160			
Actuated Cycle Length: 160			
Offset: 15 (9%), Referenced to phase 2:EBT and 6:WBT, Start of Green			
Natural Cycle: 75			
Control Type: Actuated-Coordinated			
Maximum v/c Ratio: 0.73			
Intersection Signal Delay: 21.7		Intersection LOS: C	
Intersection Capacity Utilization 65.7%		ICU Level of Service C	
Analysis Period (min) 15			

DocuSign Envelope ID: 5C03745C-4B01-4834-A65D-B77F558A4F46

Splits and Phases: 8: NC 146 (Long Shoals Rd) & Clayton Rd

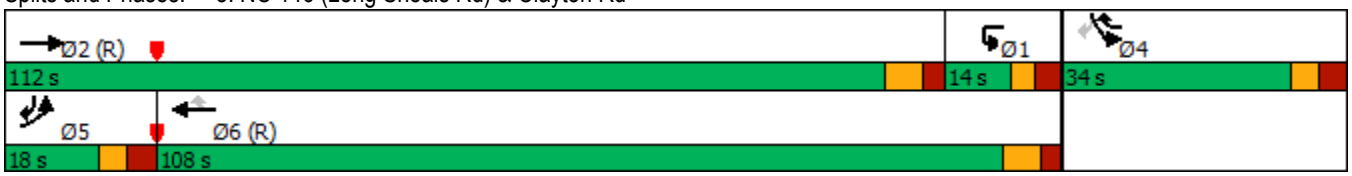

DocuSign Envelope ID: 5C03745C-4B01-4834-A65D-B77F558A4F46

Lane Group	EBU	EBT	EBR	WBL	WBT	NBL	NBR
Lane Configurations							
Traffic Volume (vph)	0	1001	46	488	943	28	280
Future Volume (vph)	0	1001	46	488	943	28	280
Ideal Flow (vphpl)	1900	1900	1900	1900	1900	1900	1900
Storage Length (ft)	325		0	325		200	0
Storage Lanes	1		0	1		1	1
Taper Length (ft)	25			25		25	
Lane Util. Factor	1.00	0.95	0.95	1.00	0.95	1.00	1.00
Frt		0.993					0.850
Flt Protected				0.950		0.950	
Satd. Flow (prot)	1759	3319	0	1671	3343	1752	1568
Flt Permitted				0.950		0.950	
Satd. Flow (perm)	1759	3319	0	1671	3343	1752	1568
Link Speed (mph)		45			45	35	
Link Distance (ft)		1808			1000	1062	
Travel Time (s)		27.4			15.2	20.7	
Peak Hour Factor	0.90	0.90	0.90	0.90	0.90	0.90	0.90
Heavy Vehicles (%)	8%	8%	8%	8%	8%	3%	3%
Adj. Flow (vph)	0	1112	51	542	1048	31	311
Shared Lane Traffic (%)							
Lane Group Flow (vph)	0	1163	0	542	1048	31	311
Enter Blocked Intersection	No	No	No	No	No	No	No
Lane Alignment	Left	Left	Right	Left	Left	Left	Right
Median Width(ft)		15			24	12	
Link Offset(ft)		0			0	0	
Crosswalk Width(ft)		16			16	16	
Two way Left Turn Lane							
Headway Factor	1.00	1.00	1.00	1.00	1.00	1.00	1.00
Turning Speed (mph)	9		9	15		15	9
Sign Control		Free			Free	Stop	

Intersection Summary			
Area Type:	Other		
Control Type: Unsignalized			
Intersection Capacity Utilization 69.5%		ICU Level of Service C	
Analysis Period (min) 15			

DocuSign Envelope ID: 5C03745C-4B01-4834-A65D-B77F558A4F46

Lane Group	EBL	EBT	EBR2	WBL	WBT	SEL	SER2	NWL
Lane Configurations								
Traffic Volume (vph)	265	788	228	629	904	934	298	229
Future Volume (vph)	265	788	228	629	904	934	298	229
Ideal Flow (vphpl)	1900	1900	1900	1900	1900	1900	1900	1900
Grade (%)		3%			-7%			
Storage Length (ft)	475			0		0		0
Storage Lanes	2			2		2		2
Taper Length (ft)	25			25		25		25
Lane Util. Factor	0.97	0.95	1.00	0.97	0.95	0.97	1.00	0.97
Frt			0.850				0.850	
Flt Protected	0.950			0.950		0.950		0.950
Satd. Flow (prot)	3080	3292	1420	3236	3593	3434	1525	3291
Flt Permitted	0.950			0.950		0.950		0.950
Satd. Flow (perm)	3080	3292	1420	3236	3593	3434	1525	3291
Right Turn on Red			Yes				Yes	
Satd. Flow (RTOR)			152				153	
Link Speed (mph)		45			45			
Link Distance (ft)		1000			418			
Travel Time (s)		15.2			6.3			
Peak Hour Factor	0.90	0.90	0.90	0.90	0.90	0.90	0.90	0.90
Heavy Vehicles (%)	12%	8%	12%	12%	4%	4%	8%	8%
Adj. Flow (vph)	294	876	253	699	1004	1038	331	254
Shared Lane Traffic (%)								
Lane Group Flow (vph)	294	876	253	699	1004	1038	331	254
Enter Blocked Intersection	No	No	No	No	No	No	No	No
Lane Alignment	Left	Left	Right	Left	Left	Left	Right	Left
Median Width(ft)		24			24			
Link Offset(ft)		0			0			
Crosswalk Width(ft)		16			16			
Two way Left Turn Lane								
Headway Factor	1.02	1.02	1.02	0.96	0.96	0.97	0.97	0.98
Turning Speed (mph)	15		9	15		15	9	15
Number of Detectors	1	2	1	1	2	1	1	1
Detector Template	Left	Thru	Right	Left	Thru	Left	Right	Left
Leading Detector (ft)	20	100	20	20	100	20	20	20
Trailing Detector (ft)	0	0	0	0	0	0	0	0
Detector 1 Position(ft)	0	0	0	0	0	0	0	0
Detector 1 Size(ft)	20	6	20	20	6	20	20	20
Detector 1 Type	Cl+Ex	Cl+Ex	Cl+Ex	Cl+Ex	Cl+Ex	Cl+Ex	Cl+Ex	Cl+Ex
Detector 1 Channel								
Detector 1 Extend (s)	0.0	0.0	0.0	0.0	0.0	0.0	0.0	0.0
Detector 1 Queue (s)	0.0	0.0	0.0	0.0	0.0	0.0	0.0	0.0
Detector 1 Delay (s)	0.0	0.0	0.0	0.0	0.0	0.0	0.0	0.0
Detector 2 Position(ft)		94			94			
Detector 2 Size(ft)		6			6			
Detector 2 Type		Cl+Ex			Cl+Ex			
Detector 2 Channel								
Detector 2 Extend (s)		0.0			0.0			
Turn Type	Prot	NA	Free	Prot	NA	Prot	Free	Prot

DocuSign Envelope ID: 5C03745C-4B01-4834-A65D-B77F558A4F46



Lane Group	EBL	EBT	EBR2	WBL	WBT	SEL	SER2	NWL
Protected Phases	5	2		1	6	4		8
Permitted Phases			Free				Free	
Detector Phase	5	2		1	6	4		8
Switch Phase								
Minimum Initial (s)	7.0	12.0		7.0	12.0	7.0		7.0
Minimum Split (s)	15.3	21.0		14.5	21.0	15.0		15.0
Total Split (s)	28.0	81.0		36.0	89.0	43.0		43.0
Total Split (%)	17.5%	50.6%		22.5%	55.6%	26.9%		26.9%
Maximum Green (s)	19.7	72.0		28.5	80.0	35.0		35.0
Yellow Time (s)	3.1	5.2		3.6	5.2	3.5		3.5
All-Red Time (s)	5.2	3.8		3.9	3.8	4.5		4.5
Lost Time Adjust (s)	-3.3	-4.0		-2.5	-4.0	-3.0		-3.0
Total Lost Time (s)	5.0	5.0		5.0	5.0	5.0		5.0
Lead/Lag	Lag	Lead		Lag	Lead			
Lead-Lag Optimize?	Yes	Yes		Yes	Yes			
Vehicle Extension (s)	2.0	6.0		2.0	6.0	2.0		2.0
Minimum Gap (s)	0.2	3.0		0.2	3.0	0.2		0.2
Time Before Reduce (s)	0.0	15.0		0.0	15.0	0.0		0.0
Time To Reduce (s)	0.0	30.0		0.0	30.0	0.0		0.0
Recall Mode	None	C-Max		None	C-Max	None		None
Act Effct Green (s)	23.0	76.0	160.0	31.0	84.0	38.0	160.0	38.0
Actuated g/C Ratio	0.14	0.48	1.00	0.19	0.52	0.24	1.00	0.24
v/c Ratio	0.67	0.56	0.18	1.12	0.53	1.27	0.22	0.33
Control Delay	73.6	23.2	0.3	124.9	15.7	180.4	0.3	51.8
Queue Delay	0.0	1.1	0.0	0.3	0.9	5.3	0.0	0.0
Total Delay	73.6	24.3	0.3	125.2	16.6	185.7	0.3	51.8
LOS	E	C	A	F	B	F	A	D
Approach Delay		30.2			61.2			
Approach LOS		C			E			
Queue Length 50th (ft)	157	337	0	~439	231	~704	0	114
Queue Length 95th (ft)	210	375	0	#571	290	#840	0	157
Internal Link Dist (ft)		920			338			
Turn Bay Length (ft)	475							
Base Capacity (vph)	442	1563	1420	626	1886	815	1525	781
Starvation Cap Reductn	0	0	0	23	564	0	0	0
Spillback Cap Reductn	0	425	0	0	0	413	0	0
Storage Cap Reductn	0	0	0	0	0	0	0	0
Reduced v/c Ratio	0.67	0.77	0.18	1.16	0.76	2.58	0.22	0.33

Intersection Summary			
Area Type:	Other		
Cycle Length: 160			
Actuated Cycle Length: 160			
Offset: 0 (0%), Referenced to phase 2:EBT and 6:WBT, Start of Green, Master Intersection			
Natural Cycle: 150			
Control Type: Actuated-Coordinated			
Maximum v/c Ratio: 1.27			
Intersection Signal Delay: 74.4		Intersection LOS: E	
Intersection Capacity Utilization 78.9%		ICU Level of Service D	

DocuSign Envelope ID: 5C03745C-4B01-4834-A65D-B77F558A4F46

Analysis Period (min) 15

~ Volume exceeds capacity, queue is theoretically infinite.
Queue shown is maximum after two cycles.

95th percentile volume exceeds capacity, queue may be longer.
Queue shown is maximum after two cycles.

Splits and Phases: 10: I-26 Ramp & NC 146 (Long Shoals Rd)

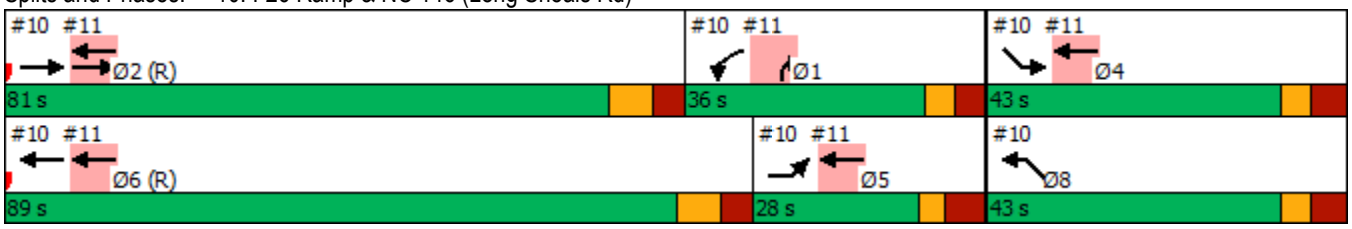

DocuSign Envelope ID: 5C03745C-4B01-4834-A65D-B77F558A4F46

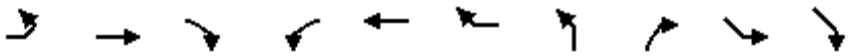

Lane Group	EBL	EBT	EBR	WBL	WBT	WBR	NBL	NBR	SEL	SER	Ø4	Ø5
Lane Configurations												
Traffic Volume (vph)	0	1722	0	0	1533	954	0	550	0	0		
Future Volume (vph)	0	1722	0	0	1533	954	0	550	0	0		
Ideal Flow (vphpl)	1900	1900	1900	1900	1900	1900	1900	1900	1900	1900		
Storage Length (ft)	0		0	0		275	0	0	0	0		
Storage Lanes	0		0	0		1	0	2	0	0		
Taper Length (ft)	25			25			25		25			
Lane Util. Factor	1.00	0.95	1.00	1.00	0.95	1.00	1.00	0.88	1.00	1.00		
Frt						0.850		0.850				
Flt Protected												
Satd. Flow (prot)	0	3471	0	0	3471	1442	0	2733	0	0		
Flt Permitted												
Satd. Flow (perm)	0	3471	0	0	3471	1442	0	2733	0	0		
Right Turn on Red			No			No		No				
Satd. Flow (RTOR)												
Link Speed (mph)		45			45		45		45			
Link Distance (ft)		418			593		396		464			
Travel Time (s)		6.3			9.0		6.0		7.0			
Peak Hour Factor	0.90	0.90	0.90	0.90	0.90	0.90	0.90	0.90	0.90	0.90		
Heavy Vehicles (%)	2%	4%	2%	2%	4%	12%	2%	4%	2%	2%		
Adj. Flow (vph)	0	1913	0	0	1703	1060	0	611	0	0		
Shared Lane Traffic (%)												
Lane Group Flow (vph)	0	1913	0	0	1703	1060	0	611	0	0		
Enter Blocked Intersection	No	No	No	No	No	No	No	No	No	No		
Lane Alignment	Left	L NA	Right	Left	Right	Right	Left	R NA	Left	Right		
Median Width(ft)		0			24		0		0			
Link Offset(ft)		0			0		0		0			
Crosswalk Width(ft)		16			16		16		16			
Two way Left Turn Lane												
Headway Factor	1.00	1.00	1.00	1.00	1.00	1.00	1.00	1.00	1.00	1.00		
Turning Speed (mph)	15		9	15		9	15	9	15	9		
Number of Detectors		2			2	1		1				
Detector Template		Thru			Thru	Right		Right				
Leading Detector (ft)		100			100	20		20				
Trailing Detector (ft)		0			0	0		0				
Detector 1 Position(ft)		0			0	0		0				
Detector 1 Size(ft)		6			6	20		20				
Detector 1 Type		Cl+Ex			Cl+Ex	Cl+Ex		Cl+Ex				
Detector 1 Channel												
Detector 1 Extend (s)		0.0			0.0	0.0		0.0				
Detector 1 Queue (s)		0.0			0.0	0.0		0.0				
Detector 1 Delay (s)		0.0			0.0	0.0		0.0				
Detector 2 Position(ft)		94			94							
Detector 2 Size(ft)		6			6							
Detector 2 Type		Cl+Ex			Cl+Ex							
Detector 2 Channel												
Detector 2 Extend (s)		0.0			0.0							
Turn Type		NA			NA	Free		Prot				
Protected Phases		2			2 4 5 6			1			4	5

DocuSign Envelope ID: 5C03745C-4B01-4834-A65D-B77F558A4F46

Lane Group	Ø6	Ø8
Lane Configurations		
Traffic Volume (vph)		
Future Volume (vph)		
Ideal Flow (vphpl)		
Storage Length (ft)		
Storage Lanes		
Taper Length (ft)		
Lane Util. Factor		
Frt		
Flt Protected		
Satd. Flow (prot)		
Flt Permitted		
Satd. Flow (perm)		
Right Turn on Red		
Satd. Flow (RTOR)		
Link Speed (mph)		
Link Distance (ft)		
Travel Time (s)		
Peak Hour Factor		
Heavy Vehicles (%)		
Adj. Flow (vph)		
Shared Lane Traffic (%)		
Lane Group Flow (vph)		
Enter Blocked Intersection		
Lane Alignment		
Median Width(ft)		
Link Offset(ft)		
Crosswalk Width(ft)		
Two way Left Turn Lane		
Headway Factor		
Turning Speed (mph)		
Number of Detectors		
Detector Template		
Leading Detector (ft)		
Trailing Detector (ft)		
Detector 1 Position(ft)		
Detector 1 Size(ft)		
Detector 1 Type		
Detector 1 Channel		
Detector 1 Extend (s)		
Detector 1 Queue (s)		
Detector 1 Delay (s)		
Detector 2 Position(ft)		
Detector 2 Size(ft)		
Detector 2 Type		
Detector 2 Channel		
Detector 2 Extend (s)		
Turn Type		
Protected Phases	6	8

DocuSign Envelope ID: 5C03745C-4B01-4834-A65D-B77F558A4F46

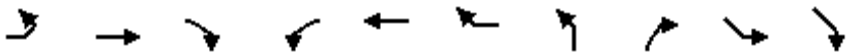

Lane Group	EBL	EBT	EBR	WBL	WBT	WBR	NBL	NBR	SEL	SER	Ø4	Ø5
Permitted Phases						Free						
Detector Phase		2			2 4 5 6			1				
Switch Phase												
Minimum Initial (s)		12.0						7.0			7.0	7.0
Minimum Split (s)		21.0						14.5			15.0	15.3
Total Split (s)		81.0						36.0			43.0	28.0
Total Split (%)		50.6%						22.5%			27%	18%
Maximum Green (s)		72.0						28.5			35.0	19.7
Yellow Time (s)		5.2						3.6			3.5	3.1
All-Red Time (s)		3.8						3.9			4.5	5.2
Lost Time Adjust (s)		0.0						0.0				
Total Lost Time (s)		9.0						7.5				
Lead/Lag		Lead						Lag				Lag
Lead-Lag Optimize?		Yes						Yes				Yes
Vehicle Extension (s)		6.0						2.0			2.0	2.0
Minimum Gap (s)		3.0						0.2			0.2	0.2
Time Before Reduce (s)		15.0						0.0			0.0	0.0
Time To Reduce (s)		30.0						0.0			0.0	0.0
Recall Mode		C-Max						None			None	None
Act Effct Green (s)		72.0			160.0	160.0		28.5				
Actuated g/C Ratio		0.45			1.00	1.00		0.18				
v/c Ratio		1.23			0.49	0.74		1.26				
Control Delay		135.6			0.0	6.3		182.9				
Queue Delay		0.1			0.1	0.0		0.6				
Total Delay		135.8			0.1	6.3		183.5				
LOS		F			A	A		F				
Approach Delay		135.8			2.5		183.5					
Approach LOS		F			A		F					
Queue Length 50th (ft)		~1316			0	750		~452				
Queue Length 95th (ft)		m#1113			m0	m0		#592				
Internal Link Dist (ft)		338			513		316		384			
Turn Bay Length (ft)						275						
Base Capacity (vph)		1561			3471	1442		486				
Starvation Cap Reductn		68			0	0		0				
Spillback Cap Reductn		12			429	0		34				
Storage Cap Reductn		0			0	0		0				
Reduced v/c Ratio		1.28			0.56	0.74		1.35				

Intersection Summary			
Area Type:	Other		
Cycle Length: 160			
Actuated Cycle Length: 160			
Offset: 0 (0%), Referenced to phase 2:EBT and 6:WBT, Start of Green, Master Intersection			
Natural Cycle: 150			
Control Type: Actuated-Coordinated			
Maximum v/c Ratio: 1.27			
Intersection Signal Delay: 71.7		Intersection LOS: E	
Intersection Capacity Utilization 80.6%		ICU Level of Service D	
Analysis Period (min) 15			

DocuSign Envelope ID: 5C03745C-4B01-4834-A65D-B77F558A4F46

Lane Group	Ø6	Ø8
Permitted Phases		
Detector Phase		
Switch Phase		
Minimum Initial (s)	12.0	7.0
Minimum Split (s)	21.0	15.0
Total Split (s)	89.0	43.0
Total Split (%)	56%	27%
Maximum Green (s)	80.0	35.0
Yellow Time (s)	5.2	3.5
All-Red Time (s)	3.8	4.5
Lost Time Adjust (s)		
Total Lost Time (s)		
Lead/Lag	Lead	
Lead-Lag Optimize?	Yes	
Vehicle Extension (s)	6.0	2.0
Minimum Gap (s)	3.0	0.2
Time Before Reduce (s)	15.0	0.0
Time To Reduce (s)	30.0	0.0
Recall Mode	C-Max	None
Act Effct Green (s)		
Actuated g/C Ratio		
v/c Ratio		
Control Delay		
Queue Delay		
Total Delay		
LOS		
Approach Delay		
Approach LOS		
Queue Length 50th (ft)		
Queue Length 95th (ft)		
Internal Link Dist (ft)		
Turn Bay Length (ft)		
Base Capacity (vph)		
Starvation Cap Reductn		
Spillback Cap Reductn		
Storage Cap Reductn		
Reduced v/c Ratio		

Intersection Summary

DocuSign Envelope ID: 5C03745C-4B01-4834-A65D-B77F558A4F46

~ Volume exceeds capacity, queue is theoretically infinite.
Queue shown is maximum after two cycles.

95th percentile volume exceeds capacity, queue may be longer.
Queue shown is maximum after two cycles.

m Volume for 95th percentile queue is metered by upstream signal.

Splits and Phases: 11: I-26 NWB Ramp & NC 146 (Long Shoals Rd)

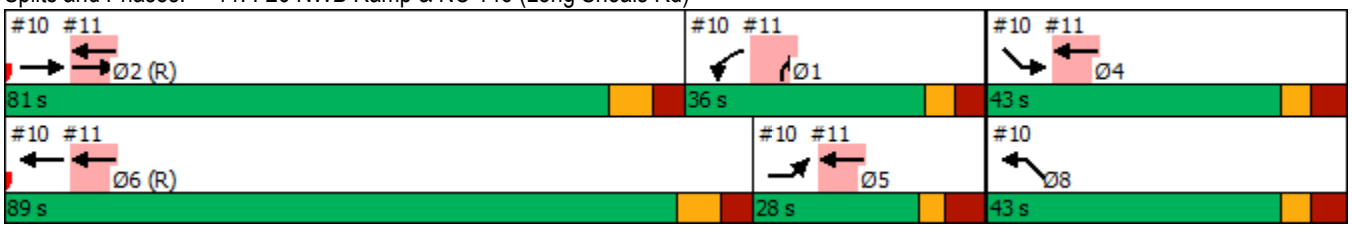

DocuSign Envelope ID: 5C03745C-4B01-4834-A65D-B77F558A4F46

Lane Group	EBL	EBT	EBR	WBL	WBT	WBR	NBL	NBT	NBR	SBL	SBT	SBR
Lane Configurations												
Traffic Volume (vph)	701	1504	67	17	1542	462	84	41	20	509	40	861
Future Volume (vph)	701	1504	67	17	1542	462	84	41	20	509	40	861
Ideal Flow (vphpl)	1900	1900	1900	1900	1900	1900	1900	1900	1900	1900	1900	1900
Grade (%)		6%			-6%			11%			7%	
Storage Length (ft)	350		400	250		225	0		0	450		0
Storage Lanes	2		1	1		1	0		0	1		1
Taper Length (ft)	25			25			25			25		
Lane Util. Factor	0.97	0.95	1.00	1.00	0.95	1.00	1.00	1.00	1.00	0.95	0.95	1.00
Frt			0.850			0.850		0.982				0.850
Flt Protected	0.950			0.950				0.972		0.950	0.959	
Satd. Flow (prot)	3266	3367	1506	1788	3575	1599	0	1632	0	1561	1576	1470
Flt Permitted	0.950			0.950				0.972		0.950	0.959	
Satd. Flow (perm)	3266	3367	1506	1788	3575	1599	0	1632	0	1561	1576	1470
Right Turn on Red			No			No			No			No
Satd. Flow (RTOR)												
Link Speed (mph)		45			45			25			25	
Link Distance (ft)		593			1582			722			992	
Travel Time (s)		9.0			24.0			19.7			27.1	
Peak Hour Factor	0.90	0.90	0.90	0.90	0.90	0.90	0.90	0.90	0.90	0.90	0.90	0.90
Heavy Vehicles (%)	4%	4%	4%	4%	4%	4%	5%	5%	5%	6%	6%	6%
Adj. Flow (vph)	779	1671	74	19	1713	513	93	46	22	566	44	957
Shared Lane Traffic (%)										46%		
Lane Group Flow (vph)	779	1671	74	19	1713	513	0	161	0	306	304	957
Enter Blocked Intersection	No	No	No	No	No	No	No	No	No	No	No	No
Lane Alignment	Left	Left	Right	Left	Left	Right	Left	Left	Right	Left	Left	Right
Median Width(ft)		24			24			0			12	
Link Offset(ft)		0			0			0			0	
Crosswalk Width(ft)		16			16			16			16	
Two way Left Turn Lane												
Headway Factor	1.04	1.04	1.04	0.96	0.96	0.96	1.08	1.08	1.08	1.05	1.05	1.05
Turning Speed (mph)	15		9	15		9	15		9	15		9
Number of Detectors	1	2	1	1	2	1	1	2		1	2	1
Detector Template	Left	Thru	Right	Left	Thru	Right	Left	Thru		Left	Thru	Right
Leading Detector (ft)	20	100	20	20	100	20	20	100		20	100	20
Trailing Detector (ft)	0	0	0	0	0	0	0	0		0	0	0
Detector 1 Position(ft)	0	0	0	0	0	0	0	0		0	0	0
Detector 1 Size(ft)	20	6	20	20	6	20	20	6		20	6	20
Detector 1 Type	Cl+Ex	Cl+Ex	Cl+Ex	Cl+Ex	Cl+Ex	Cl+Ex	Cl+Ex	Cl+Ex		Cl+Ex	Cl+Ex	Cl+Ex
Detector 1 Channel												
Detector 1 Extend (s)	0.0	0.0	0.0	0.0	0.0	0.0	0.0	0.0		0.0	0.0	0.0
Detector 1 Queue (s)	0.0	0.0	0.0	0.0	0.0	0.0	0.0	0.0		0.0	0.0	0.0
Detector 1 Delay (s)	0.0	0.0	0.0	0.0	0.0	0.0	0.0	0.0		0.0	0.0	0.0
Detector 2 Position(ft)		94			94			94			94	
Detector 2 Size(ft)		6			6			6			6	
Detector 2 Type		Cl+Ex			Cl+Ex			Cl+Ex			Cl+Ex	
Detector 2 Channel												
Detector 2 Extend (s)		0.0			0.0			0.0			0.0	
Turn Type	Prot	NA	pm+ov	Prot	NA	pm+ov	Split	NA		Split	NA	pm+ov

DocuSign Envelope ID: 5C03745C-4B01-4834-A65D-B77F558A4F46

Lane Group	EBL	EBT	EBR	WBL	WBT	WBR	NBL	NBT	NBR	SBL	SBT	SBR
Protected Phases	5	2	4	1	6	3	4	4		3	3	5
Permitted Phases			2			6						3
Detector Phase	5	2	4	1	6	3	4	4		3	3	5
Switch Phase												
Minimum Initial (s)	7.0	12.0	7.0	7.0	12.0	7.0	7.0	7.0		7.0	7.0	7.0
Minimum Split (s)	13.3	20.7	39.3	13.3	32.6	13.4	39.3	39.3		13.4	13.4	13.3
Total Split (s)	49.0	99.0	18.0	14.0	64.0	29.0	18.0	18.0		29.0	29.0	49.0
Total Split (%)	30.6%	61.9%	11.3%	8.8%	40.0%	18.1%	11.3%	11.3%		18.1%	18.1%	30.6%
Maximum Green (s)	42.7	93.3	11.7	7.7	57.4	22.6	11.7	11.7		22.6	22.6	42.7
Yellow Time (s)	3.0	4.1	3.0	3.1	5.1	3.0	3.0	3.0		3.0	3.0	3.0
All-Red Time (s)	3.3	1.6	3.3	3.2	1.5	3.4	3.3	3.3		3.4	3.4	3.3
Lost Time Adjust (s)	-1.3	-0.7	-1.3	-1.3	-1.6	-1.4		-1.3		-1.4	-1.4	-1.3
Total Lost Time (s)	5.0	5.0	5.0	5.0	5.0	5.0		5.0		5.0	5.0	5.0
Lead/Lag	Lag	Lead	Lead	Lag	Lead	Lag	Lead	Lead		Lag	Lag	Lag
Lead-Lag Optimize?	Yes	Yes	Yes	Yes	Yes	Yes	Yes	Yes		Yes	Yes	Yes
Vehicle Extension (s)	3.0	6.0	3.0	2.0	6.0	3.0	3.0	3.0		3.0	3.0	3.0
Minimum Gap (s)	0.2	3.0	0.2	0.2	3.0	0.2	0.2	0.2		0.2	0.2	0.2
Time Before Reduce (s)	0.0	20.0	0.0	0.0	20.0	0.0	0.0	0.0		0.0	0.0	0.0
Time To Reduce (s)	0.0	30.0	0.0	0.0	30.0	0.0	0.0	0.0		0.0	0.0	0.0
Recall Mode	None	C-Max	None	None	C-Max	None	None	None		None	None	None
Walk Time (s)		7.0	7.0		7.0		7.0	7.0				
Flash Dont Walk (s)		8.0	26.0		19.0		26.0	26.0				
Pedestrian Calls (#/hr)		0	0		0		0	0				
Act Effct Green (s)	44.0	99.6	114.6	8.7	59.0	88.0		13.0		24.0	24.0	68.0
Actuated g/C Ratio	0.28	0.62	0.72	0.05	0.37	0.55		0.08		0.15	0.15	0.42
v/c Ratio	0.87	0.80	0.07	0.20	1.30	0.58		1.22		1.31	1.29	1.53
Control Delay	44.7	12.5	2.2	77.1	181.1	27.2		206.4		216.0	208.7	275.0
Queue Delay	0.0	3.9	0.0	0.0	0.0	0.0		0.0		0.0	0.0	0.0
Total Delay	44.7	16.4	2.2	77.1	181.1	27.2		206.4		216.0	208.7	275.0
LOS	D	B	A	E	F	C		F		F	F	F
Approach Delay		24.7			145.0			206.4			250.6	
Approach LOS		C			F			F			F	
Queue Length 50th (ft)	431	247	5	19	~1202	347		~205		~430	~424	~1243
Queue Length 95th (ft)	m310	m200	m4	50	#1337	466		#364		#641	#633	#1659
Internal Link Dist (ft)		513			1502			642			912	
Turn Bay Length (ft)	350		400	250		225				450		
Base Capacity (vph)	898	2096	1078	100	1318	879		132		234	236	624
Starvation Cap Reductn	0	340	0	0	0	0		0		0	0	0
Spillback Cap Reductn	0	0	0	0	0	0		0		0	0	0
Storage Cap Reductn	0	0	0	0	0	0		0		0	0	0
Reduced v/c Ratio	0.87	0.95	0.07	0.19	1.30	0.58		1.22		1.31	1.29	1.53

Intersection Summary	
Area Type:	Other
Cycle Length: 160	
Actuated Cycle Length: 160	
Offset: 146 (91%), Referenced to phase 2:EBT and 6:WBT, Start of Green	
Natural Cycle: 150	
Control Type: Actuated-Coordinated	

DocuSign Envelope ID: 5C03745C-4B01-4834-A65D-B77F558A4F46

Maximum v/c Ratio: 1.53	
Intersection Signal Delay: 125.3	Intersection LOS: F
Intersection Capacity Utilization 116.5%	ICU Level of Service H
Analysis Period (min) 15	

~ Volume exceeds capacity, queue is theoretically infinite.
Queue shown is maximum after two cycles.

95th percentile volume exceeds capacity, queue may be longer.
Queue shown is maximum after two cycles.

m Volume for 95th percentile queue is metered by upstream signal.

Splits and Phases: 12: Skyland Inn Dr/Schenck Pkwy & NC 146 (Long Shoals Rd)

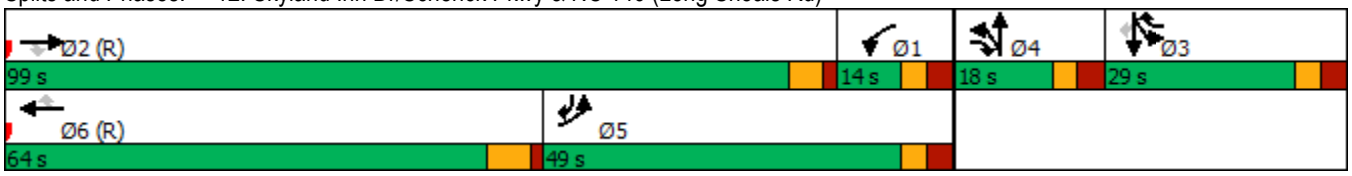

DocuSign Envelope ID: 5C03745C-4B01-4834-A65D-B77F558A4F46

Lane Group	EBL	EBT	EBR	WBL	WBT	WBR	NBL	NBT	NBR	SBL	SBT	SBR
Lane Configurations												
Traffic Volume (vph)	98	327	63	145	402	258	120	40	226	394	39	183
Future Volume (vph)	98	327	63	145	402	258	120	40	226	394	39	183
Ideal Flow (vphpl)	1900	1900	1900	1900	1900	1900	1900	1900	1900	1900	1900	1900
Storage Length (ft)	0		200	0		200	0		200	0		200
Storage Lanes	0		1	0		1	0		1	0		1
Taper Length (ft)	25			25			25			25		
Lane Util. Factor	1.00	1.00	1.00	1.00	1.00	1.00	1.00	1.00	1.00	1.00	1.00	1.00
Frt			0.850			0.850			0.850			0.850
Flt Protected		0.989			0.987			0.964			0.956	
Satd. Flow (prot)	0	1790	1538	0	1786	1538	0	1778	1568	0	1747	1553
Flt Permitted		0.989			0.987			0.964			0.956	
Satd. Flow (perm)	0	1790	1538	0	1786	1538	0	1778	1568	0	1747	1553
Link Speed (mph)		35			35			35			35	
Link Distance (ft)		2787			1029			961			1055	
Travel Time (s)		54.3			20.0			18.7			20.6	
Peak Hour Factor	0.90	0.90	0.90	0.90	0.90	0.90	0.90	0.90	0.90	0.90	0.90	0.90
Heavy Vehicles (%)	5%	5%	5%	5%	5%	5%	3%	3%	3%	4%	4%	4%
Adj. Flow (vph)	109	363	70	161	447	287	133	44	251	438	43	203
Shared Lane Traffic (%)												
Lane Group Flow (vph)	0	472	70	0	608	287	0	177	251	0	481	203
Enter Blocked Intersection	No	No	No	No	No	No	No	No	No	No	No	No
Lane Alignment	Left	Left	Right	Left	Left	Right	Left	Left	Right	Left	Left	Right
Median Width(ft)		0			0			0			0	
Link Offset(ft)		0			0			0			0	
Crosswalk Width(ft)		16			16			16			16	
Two way Left Turn Lane												
Headway Factor	1.00	1.00	1.00	1.00	1.00	1.00	1.00	1.00	1.00	1.00	1.00	1.00
Turning Speed (mph)	15		9	15		9	15		9	15		9
Sign Control		Yield			Yield			Yield			Yield	

Intersection Summary			
Area Type:	Other		
Control Type: Roundabout			
Intersection Capacity Utilization	92.3%	ICU Level of Service	F
Analysis Period (min)	15		

DocuSign Envelope ID: 5C03745C-4B01-4834-A65D-B77F558A4F46



Lane Group	NBL	NBR	SET	SER	NWL	NWT
Lane Configurations						
Traffic Volume (vph)	0	0	0	562	0	379
Future Volume (vph)	0	0	0	562	0	379
Ideal Flow (vphpl)	1900	1900	1900	1900	1900	1900
Lane Util. Factor	1.00	1.00	1.00	*1.00	1.00	0.91
Frt						
Flt Protected						
Satd. Flow (prot)	0	0	0	3393	0	4893
Flt Permitted						
Satd. Flow (perm)	0	0	0	3393	0	4893
Link Speed (mph)	45		45			25
Link Distance (ft)	263		323			131
Travel Time (s)	4.0		4.9			3.6
Peak Hour Factor	0.92	0.92	0.92	0.92	0.92	0.92
Heavy Vehicles (%)	2%	2%	2%	12%	2%	6%
Adj. Flow (vph)	0	0	0	611	0	412
Shared Lane Traffic (%)						
Lane Group Flow (vph)	0	0	0	611	0	412
Enter Blocked Intersection	No	No	No	No	No	No
Lane Alignment	Left	Right	Left	Right	Left	Left
Median Width(ft)	0		8			0
Link Offset(ft)	0		0			0
Crosswalk Width(ft)	16		16			16
Two way Left Turn Lane						
Headway Factor	1.00	1.00	1.00	1.00	1.00	1.00
Turning Speed (mph)	15	9		45	15	
Sign Control	Free		Free			Free

Intersection Summary			
Area Type:	Other		
Control Type: Unsignalized			
Intersection Capacity Utilization 23.0%		ICU Level of Service A	
Analysis Period (min) 15			

* User Entered Value

DocuSign Envelope ID: 5C03745C-4B01-4834-A65D-B77F558A4F46

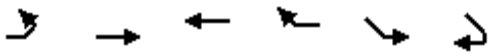

Lane Group	EBL	EBT	WBT	WBR	SEL	SER
Lane Configurations						
Traffic Volume (vph)	0	547	0	391	0	0
Future Volume (vph)	0	547	0	391	0	0
Ideal Flow (vphpl)	1900	1900	1900	1900	1900	1900
Grade (%)		2%	0%		0%	
Lane Util. Factor	1.00	1.00	1.00	*1.00	1.00	1.00
Frt						
Flt Protected						
Satd. Flow (prot)	0	1758	0	3393	0	0
Flt Permitted						
Satd. Flow (perm)	0	1758	0	3393	0	0
Link Speed (mph)		25	45		45	
Link Distance (ft)		718	860		674	
Travel Time (s)		19.6	13.0		10.2	
Peak Hour Factor	0.90	0.90	0.90	0.90	0.90	0.90
Heavy Vehicles (%)	2%	7%	2%	12%	2%	2%
Adj. Flow (vph)	0	608	0	434	0	0
Shared Lane Traffic (%)						
Lane Group Flow (vph)	0	608	0	434	0	0
Enter Blocked Intersection	No	No	No	No	No	No
Lane Alignment	Left	Left	Left	Right	Left	Right
Median Width(ft)		0	12		0	
Link Offset(ft)		0	0		0	
Crosswalk Width(ft)		16	16		16	
Two way Left Turn Lane						
Headway Factor	1.01	1.01	1.00	1.00	1.00	1.00
Turning Speed (mph)	15			45	15	9
Sign Control		Free	Free		Free	

Intersection Summary			
Area Type:	Other		
Control Type: Unsignalized			
Intersection Capacity Utilization 32.1%		ICU Level of Service A	
Analysis Period (min) 15			
* User Entered Value			

DocuSign Envelope ID: 5C03745C-4B01-4834-A65D-B77F558A4F46



Lane Group	EBT	EBR	WBL	WBT	NBL	NBR
Lane Configurations						
Traffic Volume (vph)	0	0	0	954	265	0
Future Volume (vph)	0	0	0	954	265	0
Ideal Flow (vphpl)	1900	1900	1900	1900	1900	1900
Lane Util. Factor	1.00	1.00	1.00	1.00	*1.00	1.00
Frt						
Flt Protected						
Satd. Flow (prot)	0	0	0	1696	3393	0
Flt Permitted						
Satd. Flow (perm)	0	0	0	1696	3393	0
Link Speed (mph)	45			45	45	
Link Distance (ft)	408			464	376	
Travel Time (s)	6.2			7.0	5.7	
Peak Hour Factor	0.90	0.90	0.90	0.90	0.90	0.90
Heavy Vehicles (%)	2%	2%	2%	12%	12%	2%
Adj. Flow (vph)	0	0	0	1060	294	0
Shared Lane Traffic (%)						
Lane Group Flow (vph)	0	0	0	1060	294	0
Enter Blocked Intersection	No	No	No	No	No	No
Lane Alignment	Left	Right	Left	Left	Left	Right
Median Width(ft)	0			0	24	
Link Offset(ft)	0			0	0	
Crosswalk Width(ft)	16			16	16	
Two way Left Turn Lane						
Headway Factor	1.00	1.00	1.00	1.00	1.00	1.00
Turning Speed (mph)		9	15		45	9
Sign Control	Free			Yield	Free	

Intersection Summary			
Area Type:	Other		
Control Type: Unsignalized			
Intersection Capacity Utilization 64.4%		ICU Level of Service C	
Analysis Period (min) 15			

* User Entered Value

DocuSign Envelope ID: 5C03745C-4B01-4834-A65D-B77F558A4F46

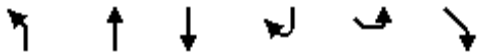

Lane Group	NBL	NBT	SBT	SBR	SEL	SER
Lane Configurations						
Traffic Volume (vph)	229	550	0	0	0	0
Future Volume (vph)	229	550	0	0	0	0
Ideal Flow (vphpl)	1900	1900	1900	1900	1900	1900
Lane Util. Factor	0.91	0.91	1.00	1.00	1.00	1.00
Frt						
Flt Protected	0.950	0.998				
Satd. Flow (prot)	1521	3313	0	0	0	0
Flt Permitted	0.950	0.998				
Satd. Flow (perm)	1521	3313	0	0	0	0
Link Speed (mph)		45	45		45	
Link Distance (ft)		214	396		556	
Travel Time (s)		3.2	6.0		8.4	
Peak Hour Factor	0.90	0.90	0.90	0.90	0.90	0.90
Heavy Vehicles (%)	8%	4%	2%	2%	2%	2%
Adj. Flow (vph)	254	611	0	0	0	0
Shared Lane Traffic (%)	10%					
Lane Group Flow (vph)	229	636	0	0	0	0
Enter Blocked Intersection	No	No	No	No	No	No
Lane Alignment	Right	R NA	Left	Right	Left	Right
Median Width(ft)		12	12		0	
Link Offset(ft)		0	0		0	
Crosswalk Width(ft)		16	16		16	
Two way Left Turn Lane						
Headway Factor	1.00	1.00	1.00	1.00	1.00	1.00
Turning Speed (mph)	45			9	15	9
Sign Control		Free	Free		Free	

Intersection Summary			
Area Type:	Other		
Control Type: Unsignalized			
Intersection Capacity Utilization 18.5%		ICU Level of Service A	
Analysis Period (min) 15			

DocuSign Envelope ID: 5C03745C-4B01-4834-A65D-B77F558A4F46

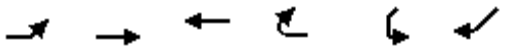

Lane Group	EBL	EBT	WBT	WBR	SWL	SWR
Lane Configurations						
Traffic Volume (vph)	499	459	0	0	0	0
Future Volume (vph)	499	459	0	0	0	0
Ideal Flow (vphpl)	1900	1900	1900	1900	1900	1900
Lane Util. Factor	1.00	1.00	1.00	1.00	1.00	1.00
Frt						
Flt Protected	0.950					
Satd. Flow (prot)	1719	1696	0	0	0	0
Flt Permitted	0.950					
Satd. Flow (perm)	1719	1696	0	0	0	0
Link Speed (mph)		35	35		35	
Link Distance (ft)		102	290		114	
Travel Time (s)		2.0	5.6		2.2	
Peak Hour Factor	0.90	0.90	0.90	0.90	0.90	0.90
Heavy Vehicles (%)	5%	12%	2%	2%	2%	2%
Adj. Flow (vph)	554	510	0	0	0	0
Shared Lane Traffic (%)						
Lane Group Flow (vph)	554	510	0	0	0	0
Enter Blocked Intersection	No	No	No	No	No	No
Lane Alignment	Left	Left	Left	Right	Left	Right
Median Width(ft)		12	12		0	
Link Offset(ft)		0	0		0	
Crosswalk Width(ft)		16	16		16	
Two way Left Turn Lane						
Headway Factor	1.00	1.00	1.00	1.00	1.00	1.00
Turning Speed (mph)	15			9	15	9
Sign Control		Free	Free		Free	

Intersection Summary			
Area Type:	Other		
Control Type: Unsignalized			
Intersection Capacity Utilization 55.9%		ICU Level of Service B	
Analysis Period (min) 15			

DocuSign Envelope ID: 5C03745C-4B01-4834-A65D-B77F558A4F46

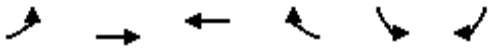

Lane Group	EBL	EBT	WBT	WBR	SBL	SBR
Lane Configurations						
Traffic Volume (vph)	0	499	0	0	1	0
Future Volume (vph)	0	499	0	0	1	0
Ideal Flow (vphpl)	1900	1900	1900	1900	1900	1900
Lane Util. Factor	1.00	1.00	1.00	1.00	1.00	1.00
Frt						
Flt Protected					0.950	
Satd. Flow (prot)	0	1696	0	0	1612	0
Flt Permitted					0.950	
Satd. Flow (perm)	0	1696	0	0	1612	0
Link Speed (mph)		35	35		35	
Link Distance (ft)		195	217		313	
Travel Time (s)		3.8	4.2		6.1	
Peak Hour Factor	0.90	0.90	0.90	0.90	0.90	0.90
Heavy Vehicles (%)	2%	12%	2%	2%	12%	2%
Adj. Flow (vph)	0	554	0	0	1	0
Shared Lane Traffic (%)						
Lane Group Flow (vph)	0	554	0	0	1	0
Enter Blocked Intersection	No	No	No	No	No	No
Lane Alignment	Left	Left	Left	Right	Left	Right
Median Width(ft)		0	0		12	
Link Offset(ft)		0	0		0	
Crosswalk Width(ft)		16	16		16	
Two way Left Turn Lane						
Headway Factor	1.00	1.00	1.00	1.00	1.00	1.00
Turning Speed (mph)	15			9	15	9
Sign Control		Free	Free		Yield	

Intersection Summary			
Area Type:	Other		
Control Type: Unsignalized			
Intersection Capacity Utilization 36.3%		ICU Level of Service A	
Analysis Period (min) 15			

DocuSign Envelope ID: 5C03745C-4B01-4834-A65D-B77F558A4F46



Lane Group	EBT	EBR	WBL	WBT	NEL	NER
Lane Configurations						
Traffic Volume (vph)	0	0	1	360	0	0
Future Volume (vph)	0	0	1	360	0	0
Ideal Flow (vphpl)	1900	1900	1900	1900	1900	1900
Lane Util. Factor	1.00	1.00	1.00	1.00	1.00	1.00
Frt						
Flt Protected						
Satd. Flow (prot)	0	0	0	1809	0	0
Flt Permitted						
Satd. Flow (perm)	0	0	0	1809	0	0
Link Speed (mph)	35			35	35	
Link Distance (ft)	100			205	150	
Travel Time (s)	1.9			4.0	2.9	
Peak Hour Factor	0.90	0.90	0.90	0.90	0.90	0.90
Heavy Vehicles (%)	2%	2%	12%	5%	2%	2%
Adj. Flow (vph)	0	0	1	400	0	0
Shared Lane Traffic (%)						
Lane Group Flow (vph)	0	0	0	401	0	0
Enter Blocked Intersection	No	No	No	No	No	No
Lane Alignment	Left	Right	Left	Left	Left	Right
Median Width(ft)	0			0	0	
Link Offset(ft)	0			0	0	
Crosswalk Width(ft)	16			16	16	
Two way Left Turn Lane						
Headway Factor	1.00	1.00	1.00	1.00	1.00	1.00
Turning Speed (mph)		9	15		15	9
Sign Control	Free			Free	Free	

Intersection Summary			
Area Type:	Other		
Control Type: Unsignalized			
Intersection Capacity Utilization 34.2%		ICU Level of Service A	
Analysis Period (min) 15			

DocuSign Envelope ID: 5C03745C-4B01-4834-A65D-B77F558A4F46



Lane Group	NBT	NBR	SBL	SBT	NWL	NWR
Lane Configurations						
Traffic Volume (vph)	0	0	1	435	0	0
Future Volume (vph)	0	0	1	435	0	0
Ideal Flow (vphpl)	1900	1900	1900	1900	1900	1900
Lane Util. Factor	1.00	1.00	1.00	1.00	1.00	1.00
Frt						
Flt Protected						
Satd. Flow (prot)	0	0	0	1863	0	0
Flt Permitted						
Satd. Flow (perm)	0	0	0	1863	0	0
Link Speed (mph)	35			35	35	
Link Distance (ft)	307			1240	313	
Travel Time (s)	6.0			24.2	6.1	
Peak Hour Factor	0.90	0.90	0.90	0.90	0.90	0.90
Adj. Flow (vph)	0	0	1	483	0	0
Shared Lane Traffic (%)						
Lane Group Flow (vph)	0	0	0	484	0	0
Enter Blocked Intersection	No	No	No	No	No	No
Lane Alignment	Left	Right	Left	Left	Left	Right
Median Width(ft)	0			0	0	
Link Offset(ft)	0			0	0	
Crosswalk Width(ft)	16			16	16	
Two way Left Turn Lane						
Headway Factor	1.00	1.00	1.00	1.00	1.00	1.00
Turning Speed (mph)		9	15		15	9
Sign Control	Stop			Free	Stop	

Intersection Summary			
Area Type:	Other		
Control Type: Unsignalized			
Intersection Capacity Utilization 36.3%		ICU Level of Service A	
Analysis Period (min) 15			

DocuSign Envelope ID: 5C03745C-4B01-4834-A65D-B77F558A4F46

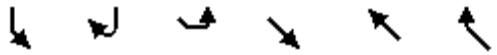

Lane Group	SBL	SBR	SEL	SET	NWT	NWR
Lane Configurations						
Traffic Volume (vph)	1	0	0	459	0	0
Future Volume (vph)	1	0	0	459	0	0
Ideal Flow (vphpl)	1900	1900	1900	1900	1900	1900
Lane Util. Factor	1.00	1.00	1.00	1.00	1.00	1.00
Frt						
Flt Protected	0.950					
Satd. Flow (prot)	1612	0	0	1696	0	0
Flt Permitted	0.950					
Satd. Flow (perm)	1612	0	0	1696	0	0
Link Speed (mph)	35			35	35	
Link Distance (ft)	150			290	741	
Travel Time (s)	2.9			5.6	14.4	
Peak Hour Factor	0.90	0.90	0.90	0.90	0.90	0.90
Heavy Vehicles (%)	12%	2%	2%	12%	2%	2%
Adj. Flow (vph)	1	0	0	510	0	0
Shared Lane Traffic (%)						
Lane Group Flow (vph)	1	0	0	510	0	0
Enter Blocked Intersection	No	No	No	No	No	No
Lane Alignment	Left	Right	Left	Left	Left	Right
Median Width(ft)	12			0	0	
Link Offset(ft)	0			0	0	
Crosswalk Width(ft)	16			16	16	
Two way Left Turn Lane						
Headway Factor	1.00	1.00	1.00	1.00	1.00	1.00
Turning Speed (mph)	15	9	15			9
Sign Control	Yield			Free	Stop	

Intersection Summary			
Area Type:	Other		
Control Type: Unsignalized			
Intersection Capacity Utilization 34.2%		ICU Level of Service A	
Analysis Period (min) 15			

DocuSign Envelope ID: 5C03745C-4B01-4834-A65D-B77F558A4F46

APPENDIX L

2045 Build DDI (Unsignalized EB Off-Ramp Terminal) AM SimTraffic Report

DocuSign Envelope ID: 5C03745C-4B01-4834-A65D-B77F558A4F46

SimTraffic Simulation Summary
2045 Build DDI AM

06/09/2022

Summary of All Intervals

Run Number	1	10	2	3	4	5	6
Start Time	6:50	6:50	6:50	6:50	6:50	6:50	6:50
End Time	8:00	8:00	8:00	8:00	8:00	8:00	8:00
Total Time (min)	70	70	70	70	70	70	70
Time Recorded (min)	60	60	60	60	60	60	60
# of Intervals	2	2	2	2	2	2	2
# of Recorded Intervals	1	1	1	1	1	1	1
Vehs Entered	12231	12493	12312	12019	12170	12043	12103
Vehs Exited	12182	12349	12154	11917	12021	11933	12013
Starting Vehs	743	715	664	703	672	670	728
Ending Vehs	792	859	822	805	821	780	818
Travel Distance (mi)	10651	10842	10680	10498	10616	10543	10555
Travel Time (hr)	1729.9	1656.7	1663.9	1818.5	1743.0	1765.2	1730.0
Total Delay (hr)	1429.9	1350.9	1363.7	1522.5	1444.1	1467.7	1432.2
Total Stops	16110	16574	15948	15976	16169	15972	15762
Fuel Used (gal)	686.0	674.4	672.5	700.8	688.7	688.8	683.9

Summary of All Intervals

Run Number	7	8	9	Avg
Start Time	6:50	6:50	6:50	6:50
End Time	8:00	8:00	8:00	8:00
Total Time (min)	70	70	70	70
Time Recorded (min)	60	60	60	60
# of Intervals	2	2	2	2
# of Recorded Intervals	1	1	1	1
Vehs Entered	12206	12196	12309	12212
Vehs Exited	12041	11964	12189	12080
Starting Vehs	657	674	729	694
Ending Vehs	822	906	849	824
Travel Distance (mi)	10647	10556	10710	10630
Travel Time (hr)	1805.1	1763.1	1837.9	1751.3
Total Delay (hr)	1505.3	1465.4	1536.6	1451.8
Total Stops	16067	15937	16484	16100
Fuel Used (gal)	704.3	690.6	714.2	690.4

Interval #0 Information Seeding

Start Time	6:50
End Time	7:00
Total Time (min)	10

Volumes adjusted by Growth Factors.

No data recorded this interval.

DocuSign Envelope ID: 5C03745C-4B01-4834-A65D-B77F558A4F46

Interval #1 Information Recording

Start Time	7:00
End Time	8:00
Total Time (min)	60

Volumes adjusted by Growth Factors.

Run Number	1	10	2	3	4	5	6
Vehs Entered	12231	12493	12312	12019	12170	12043	12103
Vehs Exited	12182	12349	12154	11917	12021	11933	12013
Starting Vehs	743	715	664	703	672	670	728
Ending Vehs	792	859	822	805	821	780	818
Travel Distance (mi)	10651	10842	10680	10498	10616	10543	10555
Travel Time (hr)	1729.9	1656.7	1663.9	1818.5	1743.0	1765.2	1730.0
Total Delay (hr)	1429.9	1350.9	1363.7	1522.5	1444.1	1467.7	1432.2
Total Stops	16110	16574	15948	15976	16169	15972	15762
Fuel Used (gal)	686.0	674.4	672.5	700.8	688.7	688.8	683.9

Interval #1 Information Recording

Start Time	7:00
End Time	8:00
Total Time (min)	60

Volumes adjusted by Growth Factors.

Run Number	7	8	9	Avg
Vehs Entered	12206	12196	12309	12212
Vehs Exited	12041	11964	12189	12080
Starting Vehs	657	674	729	694
Ending Vehs	822	906	849	824
Travel Distance (mi)	10647	10556	10710	10630
Travel Time (hr)	1805.1	1763.1	1837.9	1751.3
Total Delay (hr)	1505.3	1465.4	1536.6	1451.8
Total Stops	16067	15937	16484	16100
Fuel Used (gal)	704.3	690.6	714.2	690.4

DocuSign Envelope ID: 5C03745C-4B01-4834-A65D-B77F558A4F46

Intersection: 1: NC 191 (Brevard Rd) & Commercial Access

Movement	EB	EB	EB	WB	WB	WB	SB	SB
Directions Served	L	T	T	T	T	R	L	R
Maximum Queue (ft)	120	177	184	262	274	159	206	177
Average Queue (ft)	50	89	67	115	124	19	86	56
95th Queue (ft)	100	158	140	214	222	88	164	126
Link Distance (ft)		1574	1574	477	477		1052	
Upstream Blk Time (%)								
Queuing Penalty (veh)								
Storage Bay Dist (ft)	150					175		175
Storage Blk Time (%)	0	0		2	2	0	1	0
Queuing Penalty (veh)	0	0		0	1	0	1	0

Intersection: 2: I-26 SEB Ramps & NC 191 (Brevard Rd)

Movement	EB	EB	EB	WB	WB	WB	NB	NB	NB
Directions Served	T	T	R	L	T	T	L	L	R
Maximum Queue (ft)	351	358	234	222	271	149	221	200	87
Average Queue (ft)	205	204	62	129	71	69	129	110	30
95th Queue (ft)	302	297	174	219	162	117	194	177	70
Link Distance (ft)	477	477			1125	1125	241	241	241
Upstream Blk Time (%)	0						0	0	
Queuing Penalty (veh)	0						0	0	
Storage Bay Dist (ft)			225	200					
Storage Blk Time (%)		3	0	2	0				
Queuing Penalty (veh)		4	0	11	0				

Intersection: 3: NC 191 (Brevard Rd) & I-26 NWB Ramps

Movement	EB	EB	EB	EB	WB	WB	WB	SB	SB	SB
Directions Served	L	L	T	T	T	T	R	L	L	R
Maximum Queue (ft)	204	129	130	119	346	304	110	217	217	242
Average Queue (ft)	98	46	42	44	225	184	11	134	128	114
95th Queue (ft)	167	105	101	98	316	281	56	203	200	204
Link Distance (ft)			721	721	1510	1510		771	771	
Upstream Blk Time (%)										
Queuing Penalty (veh)										
Storage Bay Dist (ft)	625	625					200			400
Storage Blk Time (%)						3	0			
Queuing Penalty (veh)						1	0			

DocuSign Envelope ID: 5C03745C-4B01-4834-A65D-B77F558A4F46

Intersection: 4: Blue Ridge Pkwy Access & Frederick Law Olmsted Way

Movement	EB	EB	NB
Directions Served	L	R	L
Maximum Queue (ft)	62	35	28
Average Queue (ft)	23	13	4
95th Queue (ft)	47	37	20
Link Distance (ft)		1031	
Upstream Blk Time (%)			
Queuing Penalty (veh)			
Storage Bay Dist (ft)	75		275
Storage Blk Time (%)	0		
Queuing Penalty (veh)	0		

Intersection: 5: NC 191 (Brevard Rd) & Blue Ridge Pkwy Access/NC 191 Connector

Movement	EB	EB	EB	WB	WB	WB	NB	NB	NB	NB	SB	SB
Directions Served	L	T	TR	L	T	R	L	T	T	R	L	L
Maximum Queue (ft)	80	128	108	120	156	230	199	276	241	174	187	200
Average Queue (ft)	32	61	46	54	69	103	60	171	148	73	110	97
95th Queue (ft)	69	107	91	107	132	191	141	248	228	157	166	169
Link Distance (ft)	166	166	166		1306	1306		1538	1538			
Upstream Blk Time (%)		0										
Queuing Penalty (veh)		0										
Storage Bay Dist (ft)				200			175			150	200	200
Storage Blk Time (%)					0		0	7	5	0	0	0
Queuing Penalty (veh)					0		0	4	7	0	0	1

Intersection: 5: NC 191 (Brevard Rd) & Blue Ridge Pkwy Access/NC 191 Connector

Movement	SB	SB
Directions Served	T	TR
Maximum Queue (ft)	230	216
Average Queue (ft)	102	106
95th Queue (ft)	181	183
Link Distance (ft)	1553	1553
Upstream Blk Time (%)		
Queuing Penalty (veh)		
Storage Bay Dist (ft)		
Storage Blk Time (%)	0	
Queuing Penalty (veh)	1	

DocuSign Envelope ID: 5C03745C-4B01-4834-A65D-B77F558A4F46

Intersection: 6: NC 191 Connector & HE-0001 SB Off Ramp

Movement	EB	WB	SB
Directions Served	R	T	R
Maximum Queue (ft)	93	14	4
Average Queue (ft)	11	1	0
95th Queue (ft)	51	7	4
Link Distance (ft)	129	137	229
Upstream Blk Time (%)	0		
Queuing Penalty (veh)	0		
Storage Bay Dist (ft)			
Storage Blk Time (%)			
Queuing Penalty (veh)			

Intersection: 7: NC 191 Connector WB & NC 191 Connector EB

Movement	EB	NB	B1051
Directions Served	T	L	T
Maximum Queue (ft)	79	165	74
Average Queue (ft)	71	106	5
95th Queue (ft)	86	164	35
Link Distance (ft)	70	106	46
Upstream Blk Time (%)	16	6	0
Queuing Penalty (veh)	52	26	2
Storage Bay Dist (ft)			
Storage Blk Time (%)			
Queuing Penalty (veh)			

Intersection: 8: NC 146 (Long Shoals Rd) & Clayton Rd

Movement	EB	EB	WB	WB	SB	SB	SB
Directions Served	L	T	T	R	L	L	R
Maximum Queue (ft)	129	367	171	80	353	330	134
Average Queue (ft)	52	186	57	15	215	188	41
95th Queue (ft)	106	318	131	54	306	282	96
Link Distance (ft)		1540	1733	1733	1042	1042	
Upstream Blk Time (%)							
Queuing Penalty (veh)							
Storage Bay Dist (ft)	500						400
Storage Blk Time (%)							
Queuing Penalty (veh)							

DocuSign Envelope ID: 5C03745C-4B01-4834-A65D-B77F558A4F46

Intersection: 9: Ledbetter Rd & NC 146 (Long Shoals Rd)

Movement	EB	EB	WB	NB	NB
Directions Served	T	TR	L	L	R
Maximum Queue (ft)	56	54	236	225	1042
Average Queue (ft)	3	2	95	127	1005
95th Queue (ft)	34	29	196	305	1123
Link Distance (ft)	1733	1733			994
Upstream Blk Time (%)					97
Queuing Penalty (veh)					0
Storage Bay Dist (ft)			325	200	
Storage Blk Time (%)				0	100
Queuing Penalty (veh)				0	47

Intersection: 10: I-26 Ramp & NC 146 (Long Shoals Rd)

Movement	EB	EB	EB	EB	EB	WB	WB	WB	WB	SE	SE	SE
Directions Served	L	L	T	T	>	L	L	T	T	L	L	>
Maximum Queue (ft)	335	371	550	545	239	293	244	272	253	255	261	130
Average Queue (ft)	207	166	307	287	167	272	192	168	155	218	219	5
95th Queue (ft)	381	406	584	540	757	289	326	267	257	239	246	59
Link Distance (ft)			887	887	887	244	244	244	244	142	142	142
Upstream Blk Time (%)			0	0	15	72	5	3	2	94	96	
Queuing Penalty (veh)			2	1	73	198	14	8	6	0	0	
Storage Bay Dist (ft)	475	475										
Storage Blk Time (%)	1	2	3									
Queuing Penalty (veh)	8	12	8									

Intersection: 10: I-26 Ramp & NC 146 (Long Shoals Rd)

Movement	B1040	B1040	B1040	B1039	B1039	NW	NW
Directions Served	T	T	T	T	T	L	L
Maximum Queue (ft)	521	512	293	538	543	199	187
Average Queue (ft)	488	481	68	507	508	82	74
95th Queue (ft)	509	504	214	525	532	165	152
Link Distance (ft)	410	410	410	487	487	414	414
Upstream Blk Time (%)	97	94		92	76		
Queuing Penalty (veh)	0	0		0	0		
Storage Bay Dist (ft)							
Storage Blk Time (%)							
Queuing Penalty (veh)							

DocuSign Envelope ID: 5C03745C-4B01-4834-A65D-B77F558A4F46

Intersection: 11: I-26 NWB Ramp & NC 146 (Long Shoals Rd)

Movement	EB	EB	WB	WB	WB	NB	NB
Directions Served	T	T	T	T	R	R	R
Maximum Queue (ft)	288	288	526	554	273	300	313
Average Queue (ft)	263	261	485	389	44	284	287
95th Queue (ft)	319	319	601	702	210	292	302
Link Distance (ft)	244	244	500	500		281	281
Upstream Blk Time (%)	12	11	26	6		71	71
Queuing Penalty (veh)	140	124	223	56		282	282
Storage Bay Dist (ft)					275		
Storage Blk Time (%)				4	0		
Queuing Penalty (veh)				27	0		

Intersection: 12: Skyland Inn Dr/Schenck Pkwy & NC 146 (Long Shoals Rd)

Movement	EB	EB	EB	EB	EB	WB	WB	WB	WB	NB	SB	SB
Directions Served	L	L	T	T	R	L	T	T	R	LTR	L	LT
Maximum Queue (ft)	343	348	92	100	14	274	1585	1601	250	359	408	904
Average Queue (ft)	197	206	31	42	1	54	1388	1433	207	202	222	547
95th Queue (ft)	310	320	71	82	7	198	1954	1924	333	404	371	1091
Link Distance (ft)			500	500			1546	1546		656		932
Upstream Blk Time (%)							23	61				15
Queuing Penalty (veh)							0	0				0
Storage Bay Dist (ft)	350	350			400	250			225		450	
Storage Blk Time (%)	0	0				0	69	59	4		0	1
Queuing Penalty (veh)	0	1				0	18	230	22		0	1

Intersection: 12: Skyland Inn Dr/Schenck Pkwy & NC 146 (Long Shoals Rd)

Movement	SB
Directions Served	R
Maximum Queue (ft)	946
Average Queue (ft)	635
95th Queue (ft)	1134
Link Distance (ft)	932
Upstream Blk Time (%)	32
Queuing Penalty (veh)	0
Storage Bay Dist (ft)	
Storage Blk Time (%)	
Queuing Penalty (veh)	

DocuSign Envelope ID: 5C03745C-4B01-4834-A65D-B77F558A4F46

Intersection: 100: Biltmore Park West Access/Pratt & Whitney Access & NC 191 Connector

Movement	EB	EB	WB	WB	B1038	B1038	NB	NB	SB	SB
Directions Served	LT	R	LT	R	T		LT	R	LT	R
Maximum Queue (ft)	512	225	302	200	171	142	85	54	131	23
Average Queue (ft)	217	83	118	27	17	8	34	17	48	1
95th Queue (ft)	448	250	244	143	92	61	69	50	96	10
Link Distance (ft)	2650		918		129	129	878		972	
Upstream Blk Time (%)					0	0				
Queuing Penalty (veh)					2	1				
Storage Bay Dist (ft)		200		200				200		200
Storage Blk Time (%)	19	0	2	0					0	
Queuing Penalty (veh)	23	1	8	0					0	

Intersection: 1028: I-26 SEB Ramps

Movement	NW
Directions Served	T
Maximum Queue (ft)	3
Average Queue (ft)	0
95th Queue (ft)	3
Link Distance (ft)	99
Upstream Blk Time (%)	
Queuing Penalty (veh)	
Storage Bay Dist (ft)	
Storage Blk Time (%)	
Queuing Penalty (veh)	

Intersection: 1033: I-26 NWB Ramps

Movement
Directions Served
Maximum Queue (ft)
Average Queue (ft)
95th Queue (ft)
Link Distance (ft)
Upstream Blk Time (%)
Queuing Penalty (veh)
Storage Bay Dist (ft)
Storage Blk Time (%)
Queuing Penalty (veh)

DocuSign Envelope ID: 5C03745C-4B01-4834-A65D-B77F558A4F46

Intersection: 1043: I-26 Ramp & I-26 NWB Ramp

Movement	WB	NB
Directions Served	T	L
Maximum Queue (ft)	237	27
Average Queue (ft)	60	1
95th Queue (ft)	170	26
Link Distance (ft)	341	221
Upstream Blk Time (%)		0
Queuing Penalty (veh)		0
Storage Bay Dist (ft)		
Storage Blk Time (%)		
Queuing Penalty (veh)		

Intersection: 1044: I-26 Ramp & I-26 NWB Ramp

Movement	NB	NB	NB	B1045	B1045	B1046
Directions Served	L	LT	T	T	T	T
Maximum Queue (ft)	147	254	194	230	351	542
Average Queue (ft)	10	232	152	14	324	506
95th Queue (ft)	70	254	194	104	342	559
Link Distance (ft)	158	158	158	249	249	487
Upstream Blk Time (%)	0	64	15	0	61	61
Queuing Penalty (veh)	0	0	0	0	0	0
Storage Bay Dist (ft)						
Storage Blk Time (%)						
Queuing Penalty (veh)						

Intersection: 1049: HE-0001 SB On Ramp & NC 191 Connector EB

Movement	EB	EB
Directions Served	L	T
Maximum Queue (ft)	86	24
Average Queue (ft)	47	1
95th Queue (ft)	94	12
Link Distance (ft)	70	70
Upstream Blk Time (%)	4	0
Queuing Penalty (veh)	12	0
Storage Bay Dist (ft)		
Storage Blk Time (%)		
Queuing Penalty (veh)		

DocuSign Envelope ID: 5C03745C-4B01-4834-A65D-B77F558A4F46

Intersection: 1052: NC 191 Connector & HE-0001 SB Off Ramp

Movement	SB
Directions Served	L
Maximum Queue (ft)	5
Average Queue (ft)	0
95th Queue (ft)	3
Link Distance (ft)	238
Upstream Blk Time (%)	
Queuing Penalty (veh)	
Storage Bay Dist (ft)	
Storage Blk Time (%)	
Queuing Penalty (veh)	

Intersection: 1053: HE-0001 SB On Ramp & NC 191 Connector

Movement	WB
Directions Served	LT
Maximum Queue (ft)	2
Average Queue (ft)	0
95th Queue (ft)	2
Link Distance (ft)	149
Upstream Blk Time (%)	
Queuing Penalty (veh)	
Storage Bay Dist (ft)	
Storage Blk Time (%)	
Queuing Penalty (veh)	

Intersection: 1054: HE-0001 SB Off Ramp

Movement
Directions Served
Maximum Queue (ft)
Average Queue (ft)
95th Queue (ft)
Link Distance (ft)
Upstream Blk Time (%)
Queuing Penalty (veh)
Storage Bay Dist (ft)
Storage Blk Time (%)
Queuing Penalty (veh)

DocuSign Envelope ID: 5C03745C-4B01-4834-A65D-B77F558A4F46

Intersection: 1055: HE-0001 SB On Ramp

Movement
Directions Served
Maximum Queue (ft)
Average Queue (ft)
95th Queue (ft)
Link Distance (ft)
Upstream Blk Time (%)
Queuing Penalty (veh)
Storage Bay Dist (ft)
Storage Blk Time (%)
Queuing Penalty (veh)

Network Summary

Network wide Queuing Penalty: 1946

DocuSign Envelope ID: 5C03745C-4B01-4834-A65D-B77F558A4F46

APPENDIX M

2045 Build DDI (Unsignalized EB Off-Ramp Terminal) PM SimTraffic Report

DocuSign Envelope ID: 5C03745C-4B01-4834-A65D-B77F558A4F46

SimTraffic Simulation Summary
2045 Build DDI PM

06/09/2022

Summary of All Intervals

Run Number	1	10	2	3	4	5	6
Start Time	4:50	4:50	4:50	4:50	4:50	4:50	4:50
End Time	6:00	6:00	6:00	6:00	6:00	6:00	6:00
Total Time (min)	70	70	70	70	70	70	70
Time Recorded (min)	60	60	60	60	60	60	60
# of Intervals	2	2	2	2	2	2	2
# of Recorded Intervals	1	1	1	1	1	1	1
Vehs Entered	12918	12851	13018	13075	12867	12620	13094
Vehs Exited	12897	12791	12994	12988	12834	12532	12989
Starting Vehs	868	829	794	809	832	825	813
Ending Vehs	889	889	818	896	865	913	918
Travel Distance (mi)	11366	11247	11372	11403	11255	11105	11493
Travel Time (hr)	2276.1	2248.6	2149.0	2092.2	2184.7	2308.1	2246.3
Total Delay (hr)	1958.6	1934.8	1832.3	1773.9	1870.0	1997.7	1925.6
Total Stops	17678	16559	17004	17983	17269	17115	17961
Fuel Used (gal)	827.9	817.2	799.9	787.6	804.8	825.1	823.8

Summary of All Intervals

Run Number	7	8	9	Avg
Start Time	4:50	4:50	4:50	4:50
End Time	6:00	6:00	6:00	6:00
Total Time (min)	70	70	70	70
Time Recorded (min)	60	60	60	60
# of Intervals	2	2	2	2
# of Recorded Intervals	1	1	1	1
Vehs Entered	12997	13369	13158	12996
Vehs Exited	12963	13239	13096	12931
Starting Vehs	818	799	804	816
Ending Vehs	852	929	866	880
Travel Distance (mi)	11391	11670	11435	11374
Travel Time (hr)	2251.4	2162.1	2257.7	2217.6
Total Delay (hr)	1933.4	1836.3	1939.0	1900.2
Total Stops	17459	18540	17337	17488
Fuel Used (gal)	823.8	809.5	826.3	814.6

Interval #0 Information Seeding

Start Time	4:50
End Time	5:00
Total Time (min)	10

Volumes adjusted by Growth Factors.

No data recorded this interval.

DocuSign Envelope ID: 5C03745C-4B01-4834-A65D-B77F558A4F46

Interval #1 Information Recording

Start Time	5:00
End Time	6:00
Total Time (min)	60

Volumes adjusted by Growth Factors.

Run Number	1	10	2	3	4	5	6
Vehs Entered	12918	12851	13018	13075	12867	12620	13094
Vehs Exited	12897	12791	12994	12988	12834	12532	12989
Starting Vehs	868	829	794	809	832	825	813
Ending Vehs	889	889	818	896	865	913	918
Travel Distance (mi)	11366	11247	11372	11403	11255	11105	11493
Travel Time (hr)	2276.1	2248.6	2149.0	2092.2	2184.7	2308.1	2246.3
Total Delay (hr)	1958.6	1934.8	1832.3	1773.9	1870.0	1997.7	1925.6
Total Stops	17678	16559	17004	17983	17269	17115	17961
Fuel Used (gal)	827.9	817.2	799.9	787.6	804.8	825.1	823.8

Interval #1 Information Recording

Start Time	5:00
End Time	6:00
Total Time (min)	60

Volumes adjusted by Growth Factors.

Run Number	7	8	9	Avg
Vehs Entered	12997	13369	13158	12996
Vehs Exited	12963	13239	13096	12931
Starting Vehs	818	799	804	816
Ending Vehs	852	929	866	880
Travel Distance (mi)	11391	11670	11435	11374
Travel Time (hr)	2251.4	2162.1	2257.7	2217.6
Total Delay (hr)	1933.4	1836.3	1939.0	1900.2
Total Stops	17459	18540	17337	17488
Fuel Used (gal)	823.8	809.5	826.3	814.6

DocuSign Envelope ID: 5C03745C-4B01-4834-A65D-B77F558A4F46

Intersection: 1: NC 191 (Brevard Rd) & Commercial Access

Movement	EB	EB	EB	WB	WB	WB	SB	SB
Directions Served	L	T	T	T	T	R	L	R
Maximum Queue (ft)	172	251	238	280	317	199	202	135
Average Queue (ft)	85	102	90	132	142	31	81	49
95th Queue (ft)	150	200	187	251	267	124	153	102
Link Distance (ft)		1574	1574	477	477		1052	
Upstream Blk Time (%)					0			
Queuing Penalty (veh)					0			
Storage Bay Dist (ft)	150					175		175
Storage Blk Time (%)	2	2		4	3	0	1	
Queuing Penalty (veh)	14	1		0	3	0	1	

Intersection: 2: I-26 SEB Ramps & NC 191 (Brevard Rd)

Movement	EB	EB	EB	WB	WB	WB	NB	NB	NB
Directions Served	T	T	R	L	T	T	L	L	R
Maximum Queue (ft)	404	415	250	224	413	248	233	212	104
Average Queue (ft)	258	251	126	159	104	74	143	120	36
95th Queue (ft)	380	381	275	243	293	180	213	191	81
Link Distance (ft)	477	477			1125	1125	241	241	241
Upstream Blk Time (%)	0	0					0	0	
Queuing Penalty (veh)	1	1					1	0	
Storage Bay Dist (ft)			225	200					
Storage Blk Time (%)		11	0	6	0				
Queuing Penalty (veh)		28	1	30	0				

Intersection: 3: NC 191 (Brevard Rd) & I-26 NWB Ramps

Movement	EB	EB	EB	EB	WB	WB	WB	SB	SB	SB
Directions Served	L	L	T	T	T	T	R	L	L	R
Maximum Queue (ft)	245	180	165	165	405	368	194	217	228	218
Average Queue (ft)	137	78	60	62	240	200	30	133	131	118
95th Queue (ft)	220	156	133	132	352	315	123	197	200	192
Link Distance (ft)			721	721	1510	1510		771	771	
Upstream Blk Time (%)										
Queuing Penalty (veh)										
Storage Bay Dist (ft)	625	625					200			400
Storage Blk Time (%)						5	0			
Queuing Penalty (veh)						3	0			

DocuSign Envelope ID: 5C03745C-4B01-4834-A65D-B77F558A4F46

Intersection: 4: Blue Ridge Pkwy Access & Frederick Law Olmsted Way

Movement	EB	EB	NB	NB	SB
Directions Served	L	R	L	T	TR
Maximum Queue (ft)	70	28	28	39	7
Average Queue (ft)	32	12	4	2	0
95th Queue (ft)	60	35	19	23	5
Link Distance (ft)		1031		1004	166
Upstream Blk Time (%)					
Queuing Penalty (veh)					
Storage Bay Dist (ft)	75		275		
Storage Blk Time (%)	0				
Queuing Penalty (veh)	0				

Intersection: 5: NC 191 (Brevard Rd) & Blue Ridge Pkwy Access/NC 191 Connector

Movement	EB	EB	EB	WB	WB	WB	NB	NB	NB	NB	SB	SB
Directions Served	L	T	TR	L	T	R	L	T	T	R	L	L
Maximum Queue (ft)	172	157	164	198	227	459	200	426	411	175	164	188
Average Queue (ft)	94	91	92	94	98	250	81	272	249	71	90	77
95th Queue (ft)	159	147	154	174	185	407	198	384	366	184	144	149
Link Distance (ft)	166	166	166		1306	1306		1538	1538			
Upstream Blk Time (%)	2	0	1									
Queuing Penalty (veh)	3	0	1									
Storage Bay Dist (ft)				200			175			150	200	200
Storage Blk Time (%)				1	1		0	25	20	0	0	0
Queuing Penalty (veh)				1	1		0	14	18	0	0	0

Intersection: 5: NC 191 (Brevard Rd) & Blue Ridge Pkwy Access/NC 191 Connector

Movement	SB	SB
Directions Served	T	TR
Maximum Queue (ft)	225	225
Average Queue (ft)	126	115
95th Queue (ft)	204	199
Link Distance (ft)	1553	1553
Upstream Blk Time (%)		
Queuing Penalty (veh)		
Storage Bay Dist (ft)		
Storage Blk Time (%)	1	
Queuing Penalty (veh)	2	

DocuSign Envelope ID: 5C03745C-4B01-4834-A65D-B77F558A4F46

Intersection: 6: NC 191 Connector & HE-0001 SB Off Ramp

Movement	EB	EB	SB
Directions Served	R	R	R
Maximum Queue (ft)	153	7	9
Average Queue (ft)	41	0	0
95th Queue (ft)	112	7	6
Link Distance (ft)	129	129	229
Upstream Blk Time (%)	0		
Queuing Penalty (veh)	2		
Storage Bay Dist (ft)			
Storage Blk Time (%)			
Queuing Penalty (veh)			

Intersection: 7: NC 191 Connector WB & NC 191 Connector EB

Movement	EB	NB	B1051
Directions Served	T	L	T
Maximum Queue (ft)	81	172	92
Average Queue (ft)	74	105	7
95th Queue (ft)	81	165	45
Link Distance (ft)	70	106	46
Upstream Blk Time (%)	24	7	1
Queuing Penalty (veh)	118	26	3
Storage Bay Dist (ft)			
Storage Blk Time (%)			
Queuing Penalty (veh)			

Intersection: 8: NC 146 (Long Shoals Rd) & Clayton Rd

Movement	EB	EB	WB	WB	SB	SB	SB
Directions Served	L	T	T	R	L	L	R
Maximum Queue (ft)	161	304	238	82	293	266	110
Average Queue (ft)	69	143	78	20	187	158	39
95th Queue (ft)	137	283	181	61	264	245	92
Link Distance (ft)		1540	1733	1733	1042	1042	
Upstream Blk Time (%)							
Queuing Penalty (veh)							
Storage Bay Dist (ft)	500						400
Storage Blk Time (%)							
Queuing Penalty (veh)							

DocuSign Envelope ID: 5C03745C-4B01-4834-A65D-B77F558A4F46

Intersection: 9: Ledbetter Rd & NC 146 (Long Shoals Rd)

Movement	EB	EB	WB	WB	WB	NB	NB
Directions Served	T	TR	L	T	T	L	R
Maximum Queue (ft)	17	36	344	394	146	225	914
Average Queue (ft)	1	2	182	33	5	101	595
95th Queue (ft)	10	18	328	232	85	267	1095
Link Distance (ft)	1733	1733		887	887		994
Upstream Blk Time (%)							19
Queuing Penalty (veh)							0
Storage Bay Dist (ft)			325			200	
Storage Blk Time (%)			3	0		0	84
Queuing Penalty (veh)			12	0		0	24

Intersection: 10: I-26 Ramp & NC 146 (Long Shoals Rd)

Movement	EB	EB	EB	EB	EB	WB	WB	WB	WB	SE	SE	SE
Directions Served	L	L	T	T	>	L	L	T	T	L	L	>
Maximum Queue (ft)	392	483	627	466	68	298	244	272	245	252	254	183
Average Queue (ft)	267	242	225	173	5	274	210	152	95	218	221	9
95th Queue (ft)	465	496	470	331	36	293	320	268	203	236	242	83
Link Distance (ft)			887	887	887	244	244	244	244	142	142	142
Upstream Blk Time (%)						77	6	2	1	91	94	
Queuing Penalty (veh)						294	22	9	3	0	0	
Storage Bay Dist (ft)	475	475										
Storage Blk Time (%)	2	3	2									
Queuing Penalty (veh)	7	11	4									

Intersection: 10: I-26 Ramp & NC 146 (Long Shoals Rd)

Movement	B1040	B1040	B1040	B1039	B1039	NW	NW
Directions Served	T	T	T	T	T	L	L
Maximum Queue (ft)	520	504	468	541	536	235	199
Average Queue (ft)	488	481	119	505	505	121	85
95th Queue (ft)	507	500	344	539	553	201	167
Link Distance (ft)	410	410	410	487	487	414	414
Upstream Blk Time (%)	95	89		84	72		
Queuing Penalty (veh)	0	0		0	0		
Storage Bay Dist (ft)							
Storage Blk Time (%)							
Queuing Penalty (veh)							

DocuSign Envelope ID: 5C03745C-4B01-4834-A65D-B77F558A4F46

Intersection: 11: I-26 NWB Ramp & NC 146 (Long Shoals Rd)

Movement	EB	EB	WB	WB	WB	NB	NB
Directions Served	T	T	T	T	R	R	R
Maximum Queue (ft)	282	282	523	549	276	296	304
Average Queue (ft)	248	241	509	327	53	280	273
95th Queue (ft)	303	306	521	686	233	304	324
Link Distance (ft)	244	244	500	500		281	281
Upstream Blk Time (%)	7	5	54	13		51	40
Queuing Penalty (veh)	57	45	668	157		140	111
Storage Bay Dist (ft)					275		
Storage Blk Time (%)				6	0		
Queuing Penalty (veh)				55	1		

Intersection: 12: Skyland Inn Dr/Schenck Pkwy & NC 146 (Long Shoals Rd)

Movement	EB	EB	EB	EB	EB	WB	WB	WB	WB	NB	SB	SB
Directions Served	L	L	T	T	R	L	T	T	R	LTR	L	LT
Maximum Queue (ft)	298	297	236	236	36	274	1588	1606	250	701	278	980
Average Queue (ft)	190	203	156	161	5	35	1556	1571	186	610	86	936
95th Queue (ft)	273	289	225	229	21	172	1603	1594	341	822	212	1044
Link Distance (ft)			500	500			1546	1546		656		932
Upstream Blk Time (%)							37	84		71		61
Queuing Penalty (veh)							0	0		0		0
Storage Bay Dist (ft)	350	350			400	250			225		450	
Storage Blk Time (%)		0				0	82	54	2		0	0
Queuing Penalty (veh)		0				0	14	249	15		0	1

Intersection: 12: Skyland Inn Dr/Schenck Pkwy & NC 146 (Long Shoals Rd)

Movement	SB
Directions Served	R
Maximum Queue (ft)	987
Average Queue (ft)	953
95th Queue (ft)	974
Link Distance (ft)	932
Upstream Blk Time (%)	96
Queuing Penalty (veh)	0
Storage Bay Dist (ft)	
Storage Blk Time (%)	
Queuing Penalty (veh)	

DocuSign Envelope ID: 5C03745C-4B01-4834-A65D-B77F558A4F46

Intersection: 100: Biltmore Park West Access/Pratt & Whitney Access & NC 191 Connector

Movement	EB	EB	WB	WB	B1038	B1038	NB	NB	SB	SB
Directions Served	LT	R	LT	R	T		LT	R	LT	R
Maximum Queue (ft)	466	225	319	201	110	49	144	69	756	225
Average Queue (ft)	217	50	108	21	6	2	59	34	355	129
95th Queue (ft)	438	200	236	128	44	25	114	67	786	306
Link Distance (ft)	2650		918		129	129	878		972	
Upstream Blk Time (%)					0	0			6	
Queuing Penalty (veh)					0	0			0	
Storage Bay Dist (ft)		200		200				200		200
Storage Blk Time (%)	19	0	3	0			0		46	0
Queuing Penalty (veh)	12	0	7	0			0		83	1

Intersection: 1028: I-26 SEB Ramps

Movement	NW	NW
Directions Served	T	T
Maximum Queue (ft)	15	5
Average Queue (ft)	1	0
95th Queue (ft)	15	5
Link Distance (ft)	99	99
Upstream Blk Time (%)	0	
Queuing Penalty (veh)	0	
Storage Bay Dist (ft)		
Storage Blk Time (%)		
Queuing Penalty (veh)		

Intersection: 1033: I-26 NWB Ramps

Movement
Directions Served
Maximum Queue (ft)
Average Queue (ft)
95th Queue (ft)
Link Distance (ft)
Upstream Blk Time (%)
Queuing Penalty (veh)
Storage Bay Dist (ft)
Storage Blk Time (%)
Queuing Penalty (veh)

DocuSign Envelope ID: 5C03745C-4B01-4834-A65D-B77F558A4F46

Intersection: 1041: Bend

Movement	SB
Directions Served	T
Maximum Queue (ft)	89
Average Queue (ft)	3
95th Queue (ft)	63
Link Distance (ft)	466
Upstream Blk Time (%)	0
Queuing Penalty (veh)	0
Storage Bay Dist (ft)	
Storage Blk Time (%)	
Queuing Penalty (veh)	

Intersection: 1043: I-26 Ramp & I-26 NWB Ramp

Movement	WB	NB	NB
Directions Served	T	L	L
Maximum Queue (ft)	136	38	25
Average Queue (ft)	21	1	2
95th Queue (ft)	89	25	35
Link Distance (ft)	341	221	221
Upstream Blk Time (%)		0	0
Queuing Penalty (veh)		0	0
Storage Bay Dist (ft)			
Storage Blk Time (%)			
Queuing Penalty (veh)			

Intersection: 1044: I-26 Ramp & I-26 NWB Ramp

Movement	NB	NB	NB	B1045	B1045	B1046
Directions Served	L	LT	T	T	T	T
Maximum Queue (ft)	150	261	189	134	292	292
Average Queue (ft)	12	178	112	7	126	88
95th Queue (ft)	78	314	225	77	349	373
Link Distance (ft)	158	158	158	249	249	487
Upstream Blk Time (%)	0	33	8	0	13	5
Queuing Penalty (veh)	0	0	0	0	0	0
Storage Bay Dist (ft)						
Storage Blk Time (%)						
Queuing Penalty (veh)						

DocuSign Envelope ID: 5C03745C-4B01-4834-A65D-B77F558A4F46

Intersection: 1049: HE-0001 SB On Ramp & NC 191 Connector EB

Movement	EB	EB
Directions Served	L	T
Maximum Queue (ft)	103	30
Average Queue (ft)	66	2
95th Queue (ft)	101	20
Link Distance (ft)	70	70
Upstream Blk Time (%)	10	0
Queuing Penalty (veh)	49	0
Storage Bay Dist (ft)		
Storage Blk Time (%)		
Queuing Penalty (veh)		

Intersection: 1052: NC 191 Connector & HE-0001 SB Off Ramp

Movement	EB
Directions Served	T
Maximum Queue (ft)	10
Average Queue (ft)	0
95th Queue (ft)	7
Link Distance (ft)	125
Upstream Blk Time (%)	
Queuing Penalty (veh)	
Storage Bay Dist (ft)	
Storage Blk Time (%)	
Queuing Penalty (veh)	

Intersection: 1053: HE-0001 SB On Ramp & NC 191 Connector

Movement	WB
Directions Served	LT
Maximum Queue (ft)	10
Average Queue (ft)	0
95th Queue (ft)	7
Link Distance (ft)	149
Upstream Blk Time (%)	
Queuing Penalty (veh)	
Storage Bay Dist (ft)	
Storage Blk Time (%)	
Queuing Penalty (veh)	

DocuSign Envelope ID: 5C03745C-4B01-4834-A65D-B77F558A4F46

Intersection: 1054: HE-0001 SB Off Ramp

Movement	
Directions Served	
Maximum Queue (ft)	
Average Queue (ft)	
95th Queue (ft)	
Link Distance (ft)	
Upstream Blk Time (%)	
Queuing Penalty (veh)	
Storage Bay Dist (ft)	
Storage Blk Time (%)	
Queuing Penalty (veh)	

Intersection: 1055: HE-0001 SB On Ramp

Movement	SB
Directions Served	L
Maximum Queue (ft)	3
Average Queue (ft)	0
95th Queue (ft)	3
Link Distance (ft)	96
Upstream Blk Time (%)	
Queuing Penalty (veh)	
Storage Bay Dist (ft)	
Storage Blk Time (%)	
Queuing Penalty (veh)	

Network Summary

Network wide Queuing Penalty: 2327

DocuSign Envelope ID: 5C03745C-4B01-4834-A65D-B77F558A4F46

APPENDIX N

2045 Build DDI (Unsignalized EB Off-Ramp Terminal) AM Synchro Report

DocuSign Envelope ID: 5C03745C-4B01-4834-A65D-B77F558A4F46

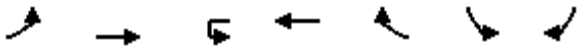

Lane Group	EBL	EBT	WBU	WBT	WBR	SBL	SBR
Lane Configurations							
Traffic Volume (vph)	63	1022	0	1128	90	114	89
Future Volume (vph)	63	1022	0	1128	90	114	89
Ideal Flow (vphpl)	1900	1900	1900	1900	1900	1900	1900
Storage Length (ft)	150		150		175	0	175
Storage Lanes	1		1		1	1	1
Taper Length (ft)	25		25			25	
Lane Util. Factor	1.00	0.95	1.00	0.95	1.00	1.00	1.00
Frt					0.850		0.850
Flt Protected	0.950					0.950	
Satd. Flow (prot)	1703	3406	1792	3406	1524	1703	1524
Flt Permitted	0.950					0.950	
Satd. Flow (perm)	1703	3406	1792	3406	1524	1703	1524
Right Turn on Red					No		No
Satd. Flow (RTOR)							
Link Speed (mph)		45		45		25	
Link Distance (ft)		1606		558		1108	
Travel Time (s)		24.3		8.5		30.2	
Peak Hour Factor	0.90	0.90	0.90	0.90	0.90	0.90	0.90
Heavy Vehicles (%)	6%	6%	6%	6%	6%	6%	6%
Adj. Flow (vph)	70	1136	0	1253	100	127	99
Shared Lane Traffic (%)							
Lane Group Flow (vph)	70	1136	0	1253	100	127	99
Enter Blocked Intersection	No	No	No	No	No	No	No
Lane Alignment	Left	Left	R NA	Left	Right	Left	Right
Median Width(ft)		12		12		12	
Link Offset(ft)		0		0		0	
Crosswalk Width(ft)		16		16		16	
Two way Left Turn Lane							
Headway Factor	1.00	1.00	1.00	1.00	1.00	1.00	1.00
Turning Speed (mph)	15		9		9	15	9
Number of Detectors	1	2	1	2	1	1	1
Detector Template	Left	Thru	Left	Thru	Right	Left	Right
Leading Detector (ft)	20	100	20	100	20	20	20
Trailing Detector (ft)	0	0	0	0	0	0	0
Detector 1 Position(ft)	0	0	0	0	0	0	0
Detector 1 Size(ft)	20	6	20	6	20	20	20
Detector 1 Type	Cl+Ex	Cl+Ex	Cl+Ex	Cl+Ex	Cl+Ex	Cl+Ex	Cl+Ex
Detector 1 Channel							
Detector 1 Extend (s)	0.0	0.0	0.0	0.0	0.0	0.0	0.0
Detector 1 Queue (s)	0.0	0.0	0.0	0.0	0.0	0.0	0.0
Detector 1 Delay (s)	0.0	0.0	0.0	0.0	0.0	0.0	0.0
Detector 2 Position(ft)		94		94			
Detector 2 Size(ft)		6		6			
Detector 2 Type		Cl+Ex		Cl+Ex			
Detector 2 Channel							
Detector 2 Extend (s)		0.0		0.0			
Turn Type	Prot	NA	Prot	NA	pm+ov	Prot	pm+ov
Protected Phases	5	2	1	6	4	4	5

DocuSign Envelope ID: 5C03745C-4B01-4834-A65D-B77F558A4F46

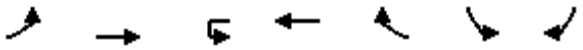

Lane Group	EBL	EBT	WBU	WBT	WBR	SBL	SBR
Permitted Phases					6		4
Detector Phase	5	2	1	6	4	4	5
Switch Phase							
Minimum Initial (s)	7.0	12.0	7.0	12.0	7.0	7.0	7.0
Minimum Split (s)	13.1	18.8	11.9	35.8	36.5	36.5	13.1
Total Split (s)	16.0	71.0	12.0	67.0	37.0	37.0	16.0
Total Split (%)	13.3%	59.2%	10.0%	55.8%	30.8%	30.8%	13.3%
Maximum Green (s)	9.9	64.2	7.1	60.2	30.5	30.5	9.9
Yellow Time (s)	3.0	4.9	3.0	4.9	3.0	3.0	3.0
All-Red Time (s)	3.1	1.9	1.9	1.9	3.5	3.5	3.1
Lost Time Adjust (s)	-1.1	-1.8	0.1	-1.8	-1.8	-1.5	-1.1
Total Lost Time (s)	5.0	5.0	5.0	5.0	4.7	5.0	5.0
Lead/Lag	Lag	Lag	Lead	Lead			Lag
Lead-Lag Optimize?	Yes	Yes	Yes	Yes			Yes
Vehicle Extension (s)	2.0	6.0	2.0	6.0	2.0	2.0	2.0
Minimum Gap (s)	0.2	3.0	0.2	3.0	0.2	0.2	0.2
Time Before Reduce (s)	0.0	15.0	0.0	15.0	0.0	0.0	0.0
Time To Reduce (s)	0.0	30.0	0.0	30.0	0.0	0.0	0.0
Recall Mode	None	C-Max	None	C-Max	None	None	None
Walk Time (s)				7.0	7.0	7.0	
Flash Dont Walk (s)				22.0	23.0	23.0	
Pedestrian Calls (#/hr)				0	0	0	
Act Effct Green (s)	11.0	95.1		79.1	99.3	14.9	30.9
Actuated g/C Ratio	0.09	0.79		0.66	0.83	0.12	0.26
v/c Ratio	0.45	0.42		0.56	0.08	0.60	0.25
Control Delay	61.4	4.8		9.2	1.2	61.1	36.0
Queue Delay	0.0	0.0		0.2	0.0	0.0	0.0
Total Delay	61.4	4.8		9.4	1.2	61.1	36.0
LOS	E	A		A	A	E	D
Approach Delay		8.1		8.8		50.1	
Approach LOS		A		A		D	
Queue Length 50th (ft)	52	117		204	6	94	61
Queue Length 95th (ft)	102	187		320	m11	152	103
Internal Link Dist (ft)		1526		478		1028	
Turn Bay Length (ft)	150				175		175
Base Capacity (vph)	156	2699		2245	1261	454	392
Starvation Cap Reductn	0	0		294	0	0	0
Spillback Cap Reductn	0	66		0	0	0	0
Storage Cap Reductn	0	0		0	0	0	0
Reduced v/c Ratio	0.45	0.43		0.64	0.08	0.28	0.25

Intersection Summary	
Area Type:	Other
Cycle Length: 120	
Actuated Cycle Length: 120	
Offset: 28 (23%), Referenced to phase 2:EBT and 6:WBT, Start of Green	
Natural Cycle: 90	
Control Type: Actuated-Coordinated	
Maximum v/c Ratio: 0.60	

DocuSign Envelope ID: 5C03745C-4B01-4834-A65D-B77F558A4F46

Intersection Signal Delay: 11.8	Intersection LOS: B
Intersection Capacity Utilization 55.8%	ICU Level of Service B
Analysis Period (min) 15	

m Volume for 95th percentile queue is metered by upstream signal.

Splits and Phases: 1: NC 191 (Brevard Rd) & Commercial Access

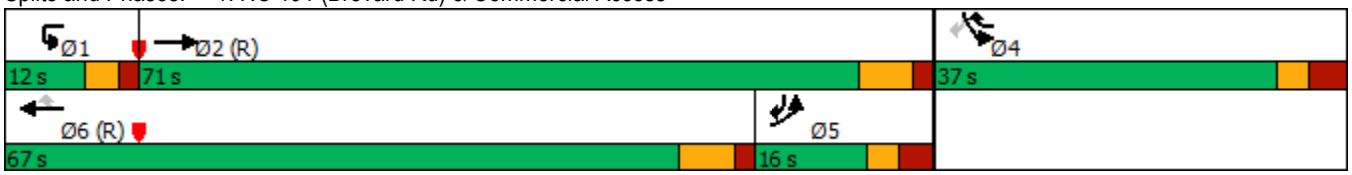

DocuSign Envelope ID: 5C03745C-4B01-4834-A65D-B77F558A4F46

Lane Group	EBT	EBR	WBL	WBT	NBL	NBR
Lane Configurations						
Traffic Volume (vph)	987	149	265	908	310	74
Future Volume (vph)	987	149	265	908	310	74
Ideal Flow (vphpl)	1900	1900	1900	1900	1900	1900
Grade (%)	-1%			-1%	0%	
Storage Length (ft)		225	200		0	0
Storage Lanes		1	1		2	1
Taper Length (ft)			25		25	
Lane Util. Factor	0.95	1.00	1.00	0.95	0.97	1.00
Frt		0.850				0.850
Flt Protected			0.950		0.950	
Satd. Flow (prot)	3423	1449	1620	3423	3303	1524
Flt Permitted			0.950		0.950	
Satd. Flow (perm)	3423	1449	1620	3423	3303	1524
Right Turn on Red		No				Yes
Satd. Flow (RTOR)						36
Link Speed (mph)	45			45	45	
Link Distance (ft)	558			1204	323	
Travel Time (s)	8.5			18.2	4.9	
Peak Hour Factor	0.90	0.90	0.90	0.90	0.90	0.90
Heavy Vehicles (%)	6%	12%	12%	6%	6%	6%
Adj. Flow (vph)	1097	166	294	1009	344	82
Shared Lane Traffic (%)						
Lane Group Flow (vph)	1097	166	294	1009	344	82
Enter Blocked Intersection	No	No	No	No	No	No
Lane Alignment	Left	Right	Left	Left	Left	Right
Median Width(ft)	12			12	40	
Link Offset(ft)	0			0	0	
Crosswalk Width(ft)	16			16	16	
Two way Left Turn Lane						
Headway Factor	0.99	0.99	0.99	0.99	1.00	1.00
Turning Speed (mph)		9	15		15	9
Number of Detectors	2	1	1	2	1	1
Detector Template	Thru	Right	Left	Thru	Left	Right
Leading Detector (ft)	100	20	20	100	20	20
Trailing Detector (ft)	0	0	0	0	0	0
Detector 1 Position(ft)	0	0	0	0	0	0
Detector 1 Size(ft)	6	20	20	6	20	20
Detector 1 Type	Cl+Ex	Cl+Ex	Cl+Ex	Cl+Ex	Cl+Ex	Cl+Ex
Detector 1 Channel						
Detector 1 Extend (s)	0.0	0.0	0.0	0.0	0.0	0.0
Detector 1 Queue (s)	0.0	0.0	0.0	0.0	0.0	0.0
Detector 1 Delay (s)	0.0	0.0	0.0	0.0	0.0	0.0
Detector 2 Position(ft)	94			94		
Detector 2 Size(ft)	6			6		
Detector 2 Type	Cl+Ex			Cl+Ex		
Detector 2 Channel						
Detector 2 Extend (s)	0.0			0.0		
Turn Type	NA	pm+ov	Prot	NA	Prot	pm+ov

DocuSign Envelope ID: 5C03745C-4B01-4834-A65D-B77F558A4F46



Lane Group	EBT	EBR	WBL	WBT	NBL	NBR
Protected Phases	2	4	1	6	4	1
Permitted Phases		2				4
Detector Phase	2	4	1	6	4	1
Switch Phase						
Minimum Initial (s)	12.0	7.0	10.0	12.0	7.0	10.0
Minimum Split (s)	18.0	13.9	16.3	18.6	13.9	16.3
Total Split (s)	57.0	24.0	39.0	96.0	24.0	39.0
Total Split (%)	47.5%	20.0%	32.5%	80.0%	20.0%	32.5%
Maximum Green (s)	51.0	17.1	32.7	89.4	17.1	32.7
Yellow Time (s)	4.4	3.0	3.0	4.7	3.0	3.0
All-Red Time (s)	1.6	3.9	3.3	1.9	3.9	3.3
Lost Time Adjust (s)	-1.0	-1.9	-1.3	-1.6	-1.9	-1.9
Total Lost Time (s)	5.0	5.0	5.0	5.0	5.0	4.4
Lead/Lag	Lead		Lag			Lag
Lead-Lag Optimize?	Yes		Yes			Yes
Vehicle Extension (s)	6.0	5.0	2.5	6.0	5.0	2.5
Minimum Gap (s)	3.0	0.2	0.2	3.0	0.2	0.2
Time Before Reduce (s)	15.0	0.0	0.0	15.0	0.0	0.0
Time To Reduce (s)	30.0	0.0	0.0	30.0	0.0	0.0
Recall Mode	C-Max	None	None	C-Max	None	None
Act Effct Green (s)	52.4	76.0	34.0	91.4	18.6	58.2
Actuated g/C Ratio	0.44	0.63	0.28	0.76	0.16	0.48
v/c Ratio	0.73	0.18	0.64	0.39	0.67	0.11
Control Delay	27.9	8.6	25.5	4.0	55.1	10.3
Queue Delay	0.3	0.0	0.0	0.0	0.0	0.0
Total Delay	28.2	8.6	25.5	4.0	55.1	10.3
LOS	C	A	C	A	E	B
Approach Delay	25.7			8.9	46.5	
Approach LOS	C			A	D	
Queue Length 50th (ft)	382	44	203	79	130	18
Queue Length 95th (ft)	465	72	302	89	181	47
Internal Link Dist (ft)	478			1124	243	
Turn Bay Length (ft)		225	200			
Base Capacity (vph)	1496	910	459	2608	522	757
Starvation Cap Reductn	87	0	0	0	0	0
Spillback Cap Reductn	0	0	0	0	0	0
Storage Cap Reductn	0	0	0	0	0	0
Reduced v/c Ratio	0.78	0.18	0.64	0.39	0.66	0.11

Intersection Summary			
Area Type:	Other		
Cycle Length: 120			
Actuated Cycle Length: 120			
Offset: 4 (3%), Referenced to phase 2:EBT and 6:WBT, Start of Green			
Natural Cycle: 60			
Control Type: Actuated-Coordinated			
Maximum v/c Ratio: 0.73			
Intersection Signal Delay: 21.3		Intersection LOS: C	
Intersection Capacity Utilization 63.3%		ICU Level of Service B	

DocuSign Envelope ID: 5C03745C-4B01-4834-A65D-B77F558A4F46

Analysis Period (min) 15

Splits and Phases: 2: I-26 SEB Ramps & NC 191 (Brevard Rd)

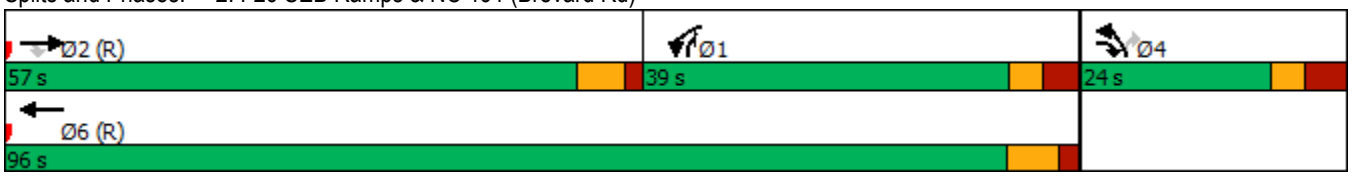

DocuSign Envelope ID: 5C03745C-4B01-4834-A65D-B77F558A4F46

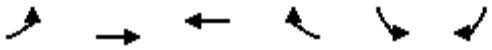

Lane Group	EBL	EBT	WBT	WBR	SBL	SBR
Lane Configurations						
Traffic Volume (vph)	214	847	979	47	373	194
Future Volume (vph)	214	847	979	47	373	194
Ideal Flow (vphpl)	1900	1900	1900	1900	1900	1900
Grade (%)		2%	-2%		2%	
Storage Length (ft)	625			200	0	400
Storage Lanes	2			1	2	1
Taper Length (ft)	25				25	
Lane Util. Factor	0.97	0.95	0.95	1.00	0.97	1.00
Frt				0.850		0.850
Flt Protected	0.950				0.950	
Satd. Flow (prot)	3095	3340	3408	1456	3240	1494
Flt Permitted	0.950				0.950	
Satd. Flow (perm)	3095	3340	3408	1456	3240	1494
Right Turn on Red				No		No
Satd. Flow (RTOR)						
Link Speed (mph)		45	45		45	
Link Distance (ft)		802	1565		860	
Travel Time (s)		12.2	23.7		13.0	
Peak Hour Factor	0.90	0.90	0.90	0.90	0.90	0.90
Heavy Vehicles (%)	12%	7%	7%	12%	7%	7%
Adj. Flow (vph)	238	941	1088	52	414	216
Shared Lane Traffic (%)						
Lane Group Flow (vph)	238	941	1088	52	414	216
Enter Blocked Intersection	No	No	No	No	No	No
Lane Alignment	Left	Left	Left	Right	Left	Right
Median Width(ft)		24	12		36	
Link Offset(ft)		0	0		0	
Crosswalk Width(ft)		16	16		16	
Two way Left Turn Lane						
Headway Factor	1.01	1.01	0.99	0.99	1.01	1.01
Turning Speed (mph)	15			9	15	9
Number of Detectors	1	2	2	1	1	1
Detector Template	Left	Thru	Thru	Right	Left	Right
Leading Detector (ft)	20	100	100	20	20	20
Trailing Detector (ft)	0	0	0	0	0	0
Detector 1 Position(ft)	0	0	0	0	0	0
Detector 1 Size(ft)	20	6	6	20	20	20
Detector 1 Type	Cl+Ex	Cl+Ex	Cl+Ex	Cl+Ex	Cl+Ex	Cl+Ex
Detector 1 Channel						
Detector 1 Extend (s)	0.0	0.0	0.0	0.0	0.0	0.0
Detector 1 Queue (s)	0.0	0.0	0.0	0.0	0.0	0.0
Detector 1 Delay (s)	0.0	0.0	0.0	0.0	0.0	0.0
Detector 2 Position(ft)		94	94			
Detector 2 Size(ft)		6	6			
Detector 2 Type		Cl+Ex	Cl+Ex			
Detector 2 Channel						
Detector 2 Extend (s)		0.0	0.0			
Turn Type	Prot	NA	NA	pm+ov	Prot	pm+ov

DocuSign Envelope ID: 5C03745C-4B01-4834-A65D-B77F558A4F46

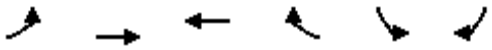

Lane Group	EBL	EBT	WBT	WBR	SBL	SBR
Protected Phases	5	2	6	4	4	5
Permitted Phases				6		4
Detector Phase	5	2	6	4	4	5
Switch Phase						
Minimum Initial (s)	7.0	12.0	12.0	7.0	7.0	7.0
Minimum Split (s)	14.0	19.0	25.0	25.0	25.0	14.0
Total Split (s)	23.0	89.0	66.0	31.0	31.0	23.0
Total Split (%)	19.2%	74.2%	55.0%	25.8%	25.8%	19.2%
Maximum Green (s)	16.0	82.0	59.0	24.0	24.0	16.0
Yellow Time (s)	5.0	5.0	5.0	5.0	5.0	5.0
All-Red Time (s)	2.0	2.0	2.0	2.0	2.0	2.0
Lost Time Adjust (s)	-2.0	-2.0	-2.0	-2.0	-2.0	-2.0
Total Lost Time (s)	5.0	5.0	5.0	5.0	5.0	5.0
Lead/Lag	Lag		Lead			Lag
Lead-Lag Optimize?	Yes		Yes			Yes
Vehicle Extension (s)	3.0	3.0	3.0	3.0	3.0	3.0
Minimum Gap (s)	0.2	3.0	3.0	0.2	0.2	0.2
Time Before Reduce (s)	0.0	15.0	15.0	0.0	0.0	0.0
Time To Reduce (s)	0.0	30.0	30.0	0.0	0.0	0.0
Recall Mode	None	C-Max	C-Max	None	None	None
Walk Time (s)			7.0	7.0	7.0	
Flash Dont Walk (s)			11.0	11.0	11.0	
Pedestrian Calls (#/hr)			0	0	0	
Act Effct Green (s)	18.0	87.8	64.8	92.0	22.2	45.2
Actuated g/C Ratio	0.15	0.73	0.54	0.77	0.18	0.38
v/c Ratio	0.51	0.39	0.59	0.05	0.69	0.38
Control Delay	21.2	1.4	20.8	3.5	51.9	29.0
Queue Delay	0.0	0.0	0.0	0.0	0.0	0.0
Total Delay	21.2	1.4	20.8	3.5	51.9	29.0
LOS	C	A	C	A	D	C
Approach Delay		5.4	20.0		44.0	
Approach LOS		A	B		D	
Queue Length 50th (ft)	90	18	289	8	155	120
Queue Length 95th (ft)	m113	27	381	17	202	179
Internal Link Dist (ft)		722	1485		780	
Turn Bay Length (ft)	625			200		400
Base Capacity (vph)	464	2444	1841	1104	702	562
Starvation Cap Reductn	0	0	0	0	0	0
Spillback Cap Reductn	0	0	0	0	0	0
Storage Cap Reductn	0	0	0	0	0	0
Reduced v/c Ratio	0.51	0.39	0.59	0.05	0.59	0.38

Intersection Summary	
Area Type:	Other
Cycle Length: 120	
Actuated Cycle Length: 120	
Offset: 2 (2%), Referenced to phase 2:EBT and 6:WBT, Start of Green	
Natural Cycle: 65	
Control Type: Actuated-Coordinated	

DocuSign Envelope ID: 5C03745C-4B01-4834-A65D-B77F558A4F46

Maximum v/c Ratio: 0.69	
Intersection Signal Delay: 19.3	Intersection LOS: B
Intersection Capacity Utilization 56.3%	ICU Level of Service B
Analysis Period (min) 15	

m Volume for 95th percentile queue is metered by upstream signal.

Splits and Phases: 3: NC 191 (Brevard Rd) & I-26 NWB Ramps

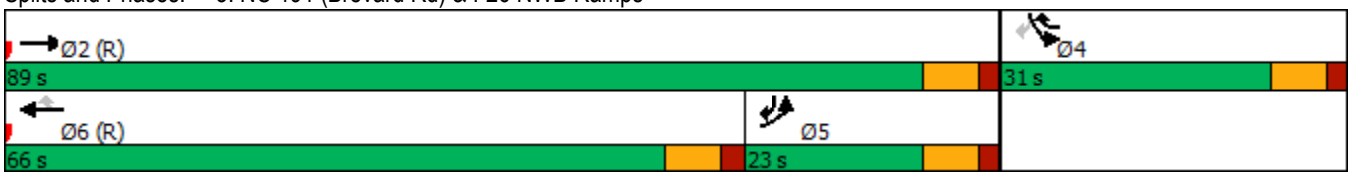

DocuSign Envelope ID: 5C03745C-4B01-4834-A65D-B77F558A4F46

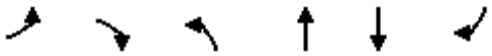

Lane Group	EBL	EBR	NBL	NBT	SBT	SBR
Lane Configurations						
Traffic Volume (vph)	56	19	22	127	159	83
Future Volume (vph)	56	19	22	127	159	83
Ideal Flow (vphpl)	1900	1900	1900	1900	1900	1900
Grade (%)	0%			0%	3%	
Storage Length (ft)	75	0	275			0
Storage Lanes	1	1	1			0
Taper Length (ft)	25		25			
Lane Util. Factor	1.00	1.00	1.00	1.00	1.00	1.00
Ped Bike Factor						
Frt		0.850			0.954	
Flt Protected	0.950		0.950			
Satd. Flow (prot)	1770	1583	1770	1863	1750	0
Flt Permitted	0.950		0.950			
Satd. Flow (perm)	1770	1583	1770	1863	1750	0
Link Speed (mph)	20			35	35	
Link Distance (ft)	1081			1059	248	
Travel Time (s)	36.9			20.6	4.8	
Confl. Bikes (#/hr)						159
Peak Hour Factor	0.90	0.90	0.90	0.90	0.90	0.90
Adj. Flow (vph)	62	21	24	141	177	92
Shared Lane Traffic (%)						
Lane Group Flow (vph)	62	21	24	141	269	0
Enter Blocked Intersection	No	No	No	No	No	No
Lane Alignment	Left	Right	Left	Left	Left	Right
Median Width(ft)	12			12	0	
Link Offset(ft)	0			0	0	
Crosswalk Width(ft)	16			16	16	
Two way Left Turn Lane						
Headway Factor	1.00	1.00	1.00	1.00	1.02	1.02
Turning Speed (mph)	15	9	15			9
Sign Control	Stop			Free	Free	

Intersection Summary			
Area Type:	Other		
Control Type: Unsignalized			
Intersection Capacity Utilization 28.3%		ICU Level of Service A	
Analysis Period (min) 15			

DocuSign Envelope ID: 5C03745C-4B01-4834-A65D-B77F558A4F46

Lane Group	EBL	EBT	EBR	WBL	WBT	WBR	NBL	NBT	NBR	SBL	SBT	SBR
Lane Configurations												
Traffic Volume (vph)	38	111	34	81	121	252	62	671	133	356	575	59
Future Volume (vph)	38	111	34	81	121	252	62	671	133	356	575	59
Ideal Flow (vphpl)	1900	1900	1900	1900	1900	1900	1900	1900	1900	1900	1900	1900
Grade (%)		3%			0%			2%			-7%	
Storage Length (ft)	0		0	200		0	175		150	200		0
Storage Lanes	1		0	1		1	1		1	2		0
Taper Length (ft)	25			25			25			25		
Lane Util. Factor	1.00	0.95	0.95	1.00	1.00	1.00	1.00	0.95	1.00	0.97	0.95	0.95
Frt		0.965				0.850			0.850		0.986	
Flt Protected	0.950			0.950			0.950			0.950		
Satd. Flow (prot)	1743	3364	0	1719	1810	1538	1686	3372	1508	3452	3509	0
Flt Permitted	0.950			0.950			0.950			0.950		
Satd. Flow (perm)	1743	3364	0	1719	1810	1538	1686	3372	1508	3452	3509	0
Right Turn on Red			No			No			No			No
Satd. Flow (RTOR)												
Link Speed (mph)		35			35			45			45	
Link Distance (ft)		248			1390			1589			1600	
Travel Time (s)		4.8			27.1			24.1			24.2	
Peak Hour Factor	0.90	0.90	0.90	0.90	0.90	0.90	0.90	0.90	0.90	0.90	0.90	0.90
Heavy Vehicles (%)	2%	2%	2%	5%	5%	5%	6%	6%	6%	5%	5%	5%
Adj. Flow (vph)	42	123	38	90	134	280	69	746	148	396	639	66
Shared Lane Traffic (%)												
Lane Group Flow (vph)	42	161	0	90	134	280	69	746	148	396	705	0
Enter Blocked Intersection	No	No	No	No	No	No	No	No	No	No	No	No
Lane Alignment	L NA	Left	Right	Left	Left	Left	Left	L NA	Right	Left	Left	Right
Median Width(ft)		12			12			24			24	
Link Offset(ft)		0			0			0			0	
Crosswalk Width(ft)		16			16			16			16	
Two way Left Turn Lane												
Headway Factor	1.02	1.02	1.02	1.00	1.00	1.00	1.01	1.01	1.01	0.96	0.96	0.96
Turning Speed (mph)	15		9	15		9	15		9	15		9
Number of Detectors	1	2		1	2	1	1	2	1	1	2	
Detector Template	Left	Thru		Left	Thru	Right	Left	Thru	Right	Left	Thru	
Leading Detector (ft)	20	100		20	100	20	20	100	20	20	100	
Trailing Detector (ft)	0	0		0	0	0	0	0	0	0	0	
Detector 1 Position(ft)	0	0		0	0	0	0	0	0	0	0	
Detector 1 Size(ft)	20	6		20	6	20	20	6	20	20	6	
Detector 1 Type	Cl+Ex	Cl+Ex		Cl+Ex	Cl+Ex	Cl+Ex	Cl+Ex	Cl+Ex	Cl+Ex	Cl+Ex	Cl+Ex	
Detector 1 Channel												
Detector 1 Extend (s)	0.0	0.0		0.0	0.0	0.0	0.0	0.0	0.0	0.0	0.0	
Detector 1 Queue (s)	0.0	0.0		0.0	0.0	0.0	0.0	0.0	0.0	0.0	0.0	
Detector 1 Delay (s)	0.0	0.0		0.0	0.0	0.0	0.0	0.0	0.0	0.0	0.0	
Detector 2 Position(ft)		94			94			94			94	
Detector 2 Size(ft)		6			6			6			6	
Detector 2 Type		Cl+Ex			Cl+Ex			Cl+Ex			Cl+Ex	
Detector 2 Channel												
Detector 2 Extend (s)		0.0			0.0			0.0			0.0	
Turn Type	Prot	NA		Prot	NA	pm+ov	Prot	NA	pm+ov	Prot	NA	

DocuSign Envelope ID: 5C03745C-4B01-4834-A65D-B77F558A4F46

Lane Group	EBL	EBT	EBR	WBL	WBT	WBR	NBL	NBT	NBR	SBL	SBT	SBR
Protected Phases	7	4		3	8	1	5	2	3	1	6	
Permitted Phases						8			2			
Detector Phase	7	4		3	8	1	5	2	3	1	6	
Switch Phase												
Minimum Initial (s)	7.0	7.0		7.0	7.0	7.0	7.0	12.0	7.0	7.0	12.0	
Minimum Split (s)	14.0	14.0		14.0	14.0	14.0	14.0	19.0	14.0	14.0	19.0	
Total Split (s)	16.0	20.0		20.0	24.0	29.0	17.0	51.0	20.0	29.0	63.0	
Total Split (%)	13.3%	16.7%		16.7%	20.0%	24.2%	14.2%	42.5%	16.7%	24.2%	52.5%	
Maximum Green (s)	9.0	13.0		13.0	17.0	22.0	10.0	44.0	13.0	22.0	56.0	
Yellow Time (s)	5.0	5.0		5.0	5.0	5.0	5.0	5.0	5.0	5.0	5.0	
All-Red Time (s)	2.0	2.0		2.0	2.0	2.0	2.0	2.0	2.0	2.0	2.0	
Lost Time Adjust (s)	-2.0	-2.0		-2.0	-2.0	-2.0	-2.0	-2.0	-2.0	-2.0	-2.0	
Total Lost Time (s)	5.0	5.0		5.0	5.0	5.0	5.0	5.0	5.0	5.0	5.0	
Lead/Lag	Lead	Lag		Lead	Lag	Lead	Lead	Lag	Lead	Lead	Lag	
Lead-Lag Optimize?	Yes	Yes		Yes	Yes	Yes	Yes	Yes	Yes	Yes	Yes	
Vehicle Extension (s)	3.0	3.0		3.0	3.0	3.0	3.0	3.0	3.0	3.0	3.0	
Minimum Gap (s)	3.0	3.0		3.0	3.0	3.0	3.0	3.0	3.0	3.0	3.0	
Time Before Reduce (s)	0.0	0.0		0.0	0.0	0.0	0.0	15.0	0.0	0.0	15.0	
Time To Reduce (s)	0.0	0.0		0.0	0.0	0.0	0.0	30.0	0.0	0.0	30.0	
Recall Mode	None	None		None	None	None	None	Min	None	None	Min	
Act Effct Green (s)	10.1	12.0		12.3	21.0	44.4	10.9	29.4	46.8	18.3	40.4	
Actuated g/C Ratio	0.11	0.13		0.13	0.23	0.48	0.12	0.32	0.51	0.20	0.44	
v/c Ratio	0.22	0.37		0.39	0.33	0.38	0.35	0.70	0.19	0.58	0.46	
Control Delay	46.4	42.4		46.3	38.9	20.6	47.9	32.1	13.9	38.9	20.8	
Queue Delay	0.0	0.0		0.0	0.0	0.0	0.0	0.0	0.0	0.0	0.0	
Total Delay	46.4	42.4		46.3	38.9	20.6	47.9	32.1	13.9	38.9	20.8	
LOS	D	D		D	D	C	D	C	B	D	C	
Approach Delay		43.2			30.1			30.4			27.3	
Approach LOS		D			C			C			C	
Queue Length 50th (ft)	23	45		48	71	113	37	196	44	107	160	
Queue Length 95th (ft)	66	92		114	154	221	95	304	92	186	231	
Internal Link Dist (ft)		168			1310			1509			1520	
Turn Bay Length (ft)				200			175		150	200		
Base Capacity (vph)	213	561		286	434	845	225	1725	814	922	2264	
Starvation Cap Reductn	0	0		0	0	0	0	0	0	0	0	
Spillback Cap Reductn	0	0		0	0	0	0	0	0	0	0	
Storage Cap Reductn	0	0		0	0	0	0	0	0	0	0	
Reduced v/c Ratio	0.20	0.29		0.31	0.31	0.33	0.31	0.43	0.18	0.43	0.31	

Intersection Summary			
Area Type:	Other		
Cycle Length: 120			
Actuated Cycle Length: 92.5			
Natural Cycle: 65			
Control Type: Actuated-Uncoordinated			
Maximum v/c Ratio: 0.70			
Intersection Signal Delay: 30.1		Intersection LOS: C	
Intersection Capacity Utilization 57.6%		ICU Level of Service B	
Analysis Period (min) 15			

DocuSign Envelope ID: 5C03745C-4B01-4834-A65D-B77F558A4F46

Splits and Phases: 5: NC 191 (Brevard Rd) & Blue Ridge Pkwy Access/NC 191 Connector

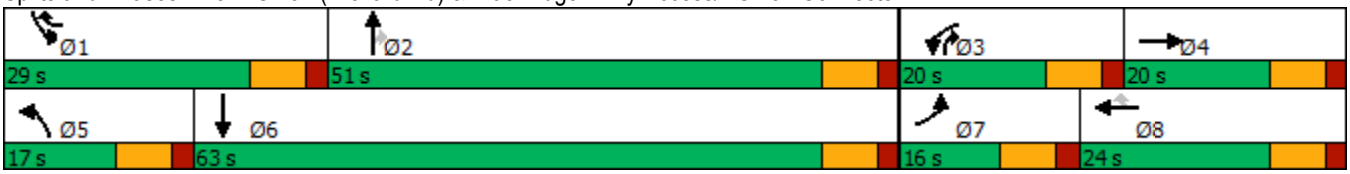

DocuSign Envelope ID: 5C03745C-4B01-4834-A65D-B77F558A4F46



Lane Group	EBL	EBT	EBR	WBL	WBT	WBR	SBL	SBR	NWL	NWR
Lane Configurations										
Traffic Volume (vph)	0	0	633	0	417	0	0	506	0	0
Future Volume (vph)	0	0	633	0	417	0	0	506	0	0
Ideal Flow (vphpl)	1900	1900	1900	1900	1900	1900	1900	1900	1900	1900
Lane Util. Factor	1.00	1.00	*0.95	1.00	1.00	1.00	1.00	1.00	1.00	1.00
Frt								0.865		
Flt Protected										
Satd. Flow (prot)	0	0	3438	0	1810	0	0	1565	0	0
Flt Permitted										
Satd. Flow (perm)	0	0	3438	0	1810	0	0	1565	0	0
Link Speed (mph)		35			35		35		35	
Link Distance (ft)		177			206		307		102	
Travel Time (s)		3.4			4.0		6.0		2.0	
Peak Hour Factor	0.90	0.90	0.90	0.90	0.90	0.90	0.90	0.90	0.90	0.90
Heavy Vehicles (%)	2%	2%	5%	2%	5%	2%	2%	5%	2%	2%
Adj. Flow (vph)	0	0	703	0	463	0	0	562	0	0
Shared Lane Traffic (%)										
Lane Group Flow (vph)	0	0	703	0	463	0	0	562	0	0
Enter Blocked Intersection	No	No	No	No	No	No	No	No	No	No
Lane Alignment	Left	Left	Right	Left	L NA	Right	Left	R NA	Left	Right
Median Width(ft)		0			0		0		0	
Link Offset(ft)		0			0		0		0	
Crosswalk Width(ft)		16			16		16		16	
Two way Left Turn Lane										
Headway Factor	1.00	1.00	1.00	1.00	1.00	1.00	1.00	1.00	1.00	1.00
Turning Speed (mph)	15		35	15		9	15	9	15	9
Sign Control		Free			Free		Free		Free	

Intersection Summary			
Area Type:	Other		
Control Type: Unsignalized			
Intersection Capacity Utilization 59.9%		ICU Level of Service B	
Analysis Period (min) 15			

* User Entered Value

DocuSign Envelope ID: 5C03745C-4B01-4834-A65D-B77F558A4F46

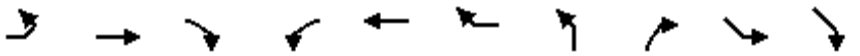

Lane Group	EBL	EBT	EBR	WBL	WBT	WBR	NBL	NBR	SEL	SER
Lane Configurations										
Traffic Volume (vph)	0	331	0	0	0	0	417	0	0	0
Future Volume (vph)	0	331	0	0	0	0	417	0	0	0
Ideal Flow (vphpl)	1900	1900	1900	1900	1900	1900	1900	1900	1900	1900
Lane Util. Factor	1.00	1.00	1.00	1.00	1.00	1.00	1.00	1.00	1.00	1.00
Frt										
Flt Protected										
Satd. Flow (prot)	0	1810	0	0	0	0	1810	0	0	0
Flt Permitted										
Satd. Flow (perm)	0	1810	0	0	0	0	1810	0	0	0
Right Turn on Red	No		No			No		No		
Satd. Flow (RTOR)										
Link Speed (mph)		35			35		35		35	
Link Distance (ft)		114			195		160		206	
Travel Time (s)		2.2			3.8		3.1		4.0	
Peak Hour Factor	0.90	0.90	0.90	0.90	0.90	0.90	0.90	0.90	0.90	0.90
Heavy Vehicles (%)	2%	5%	2%	2%	2%	2%	5%	2%	2%	2%
Adj. Flow (vph)	0	368	0	0	0	0	463	0	0	0
Shared Lane Traffic (%)										
Lane Group Flow (vph)	0	368	0	0	0	0	463	0	0	0
Enter Blocked Intersection	No	No	No	No	No	No	No	No	No	No
Lane Alignment	Left	Left	Right	Left	Left	Right	Left	Right	Left	Right
Median Width(ft)		0			0		12		0	
Link Offset(ft)		0			0		0		0	
Crosswalk Width(ft)		16			16		16		16	
Two way Left Turn Lane										
Headway Factor	1.00	1.00	1.00	1.00	1.00	1.00	1.00	1.00	1.00	1.00
Turning Speed (mph)	15		9	15		9	35	9	15	9
Number of Detectors		2					1			
Detector Template		Thru					Left			
Leading Detector (ft)		100					20			
Trailing Detector (ft)		0					0			
Detector 1 Position(ft)		0					0			
Detector 1 Size(ft)		6					20			
Detector 1 Type		Cl+Ex					Cl+Ex			
Detector 1 Channel										
Detector 1 Extend (s)		0.0					0.0			
Detector 1 Queue (s)		0.0					0.0			
Detector 1 Delay (s)		0.0					0.0			
Detector 2 Position(ft)		94								
Detector 2 Size(ft)		6								
Detector 2 Type		Cl+Ex								
Detector 2 Channel										
Detector 2 Extend (s)		0.0								
Turn Type		NA					Prot			
Protected Phases		2					8			
Permitted Phases										
Detector Phase		2					8			
Switch Phase										

DocuSign Envelope ID: 5C03745C-4B01-4834-A65D-B77F558A4F46

Lane Group	EBL	EBT	EBR	WBL	WBT	WBR	NBL	NBR	SEL	SER
Minimum Initial (s)		10.0					10.0			
Minimum Split (s)		17.0					17.0			
Total Split (s)		28.0					32.0			
Total Split (%)		46.7%					53.3%			
Maximum Green (s)		21.0					25.0			
Yellow Time (s)		5.0					5.0			
All-Red Time (s)		2.0					2.0			
Lost Time Adjust (s)		-2.0					-2.0			
Total Lost Time (s)		5.0					5.0			
Lead/Lag										
Lead-Lag Optimize?										
Vehicle Extension (s)		3.0					3.0			
Recall Mode		Min					Min			
Act Effct Green (s)		16.8					18.9			
Actuated g/C Ratio		0.36					0.41			
v/c Ratio		0.56					0.63			
Control Delay		16.4					15.6			
Queue Delay		0.0					0.0			
Total Delay		16.4					15.6			
LOS		B					B			
Approach Delay		16.4					15.6			
Approach LOS		B					B			
Queue Length 50th (ft)		72					88			
Queue Length 95th (ft)		170					196			
Internal Link Dist (ft)		34			115		80		126	
Turn Bay Length (ft)										
Base Capacity (vph)		940					1104			
Starvation Cap Reductn		0					0			
Spillback Cap Reductn		0					0			
Storage Cap Reductn		0					0			
Reduced v/c Ratio		0.39					0.42			

Intersection Summary			
Area Type:	Other		
Cycle Length: 60			
Actuated Cycle Length: 46.1			
Natural Cycle: 40			
Control Type: Actuated-Uncoordinated			
Maximum v/c Ratio: 0.63			
Intersection Signal Delay: 15.9		Intersection LOS: B	
Intersection Capacity Utilization 48.9%		ICU Level of Service A	
Analysis Period (min) 15			

Splits and Phases: 7: NC 191 Connector WB & NC 191 Connector EB

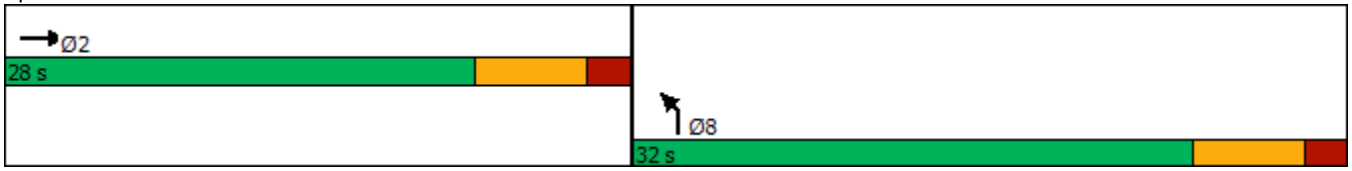

DocuSign Envelope ID: 5C03745C-4B01-4834-A65D-B77F558A4F46

Lane Group	EBL	EBT	WBU	WBT	WBR	SBL	SBR
Lane Configurations							
Traffic Volume (vph)	42	673	0	697	315	402	56
Future Volume (vph)	42	673	0	697	315	402	56
Ideal Flow (vphpl)	1900	1900	1900	1900	1900	1900	1900
Grade (%)		-9%		5%		-9%	
Storage Length (ft)	500		350		0	0	400
Storage Lanes	1		1		1	2	1
Taper Length (ft)	25		25			25	
Lane Util. Factor	1.00	1.00	1.00	1.00	1.00	0.97	1.00
Frt					0.850		0.850
Flt Protected	0.950					0.950	
Satd. Flow (prot)	1715	1805	1715	1715	1458	3485	1607
Flt Permitted	0.950					0.950	
Satd. Flow (perm)	1715	1805	1715	1715	1458	3485	1607
Right Turn on Red					No		No
Satd. Flow (RTOR)							
Link Speed (mph)		35		35		45	
Link Distance (ft)		1579		1808		1089	
Travel Time (s)		30.8		35.2		16.5	
Peak Hour Factor	0.90	0.90	0.90	0.90	0.90	0.90	0.90
Heavy Vehicles (%)	10%	10%	8%	8%	8%	5%	5%
Adj. Flow (vph)	47	748	0	774	350	447	62
Shared Lane Traffic (%)							
Lane Group Flow (vph)	47	748	0	774	350	447	62
Enter Blocked Intersection	No	No	No	No	No	No	No
Lane Alignment	Left	Left	R NA	Left	Right	Left	Right
Median Width(ft)		12		12		24	
Link Offset(ft)		0		0		0	
Crosswalk Width(ft)		16		16		16	
Two way Left Turn Lane							
Headway Factor	0.94	0.94	1.03	1.03	1.03	0.94	0.94
Turning Speed (mph)	15		9		9	15	9
Number of Detectors	1	2	1	2	1	1	1
Detector Template	Left	Thru	Left	Thru	Right	Left	Right
Leading Detector (ft)	20	100	20	100	20	20	20
Trailing Detector (ft)	0	0	0	0	0	0	0
Detector 1 Position(ft)	0	0	0	0	0	0	0
Detector 1 Size(ft)	20	6	20	6	20	20	20
Detector 1 Type	Cl+Ex	Cl+Ex	Cl+Ex	Cl+Ex	Cl+Ex	Cl+Ex	Cl+Ex
Detector 1 Channel							
Detector 1 Extend (s)	0.0	0.0	0.0	0.0	0.0	0.0	0.0
Detector 1 Queue (s)	0.0	0.0	0.0	0.0	0.0	0.0	0.0
Detector 1 Delay (s)	0.0	0.0	0.0	0.0	0.0	0.0	0.0
Detector 2 Position(ft)		94		94			
Detector 2 Size(ft)		6		6			
Detector 2 Type		Cl+Ex		Cl+Ex			
Detector 2 Channel							
Detector 2 Extend (s)		0.0		0.0			
Turn Type	Prot	NA	Prot	NA	pm+ov	Prot	pm+ov

DocuSign Envelope ID: 5C03745C-4B01-4834-A65D-B77F558A4F46

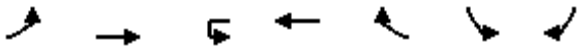

Lane Group	EBL	EBT	WBU	WBT	WBR	SBL	SBR
Protected Phases	5	2	1	6	4	4	5
Permitted Phases					6		4
Detector Phase	5	2	1	6	4	4	5
Switch Phase							
Minimum Initial (s)	7.0	10.0	7.0	10.0	7.0	7.0	7.0
Minimum Split (s)	13.7	17.3	13.3	17.3	13.8	13.8	13.7
Total Split (s)	17.0	125.0	14.0	122.0	41.0	41.0	17.0
Total Split (%)	9.4%	69.4%	7.8%	67.8%	22.8%	22.8%	9.4%
Maximum Green (s)	10.3	117.7	7.7	114.7	34.2	34.2	10.3
Yellow Time (s)	3.3	4.6	3.0	4.6	3.3	3.3	3.3
All-Red Time (s)	3.4	2.7	3.3	2.7	3.5	3.5	3.4
Lost Time Adjust (s)	-1.7	-2.3	-1.3	-2.3	-2.3	-1.8	-1.8
Total Lost Time (s)	5.0	5.0	5.0	5.0	4.5	5.0	4.9
Lead/Lag	Lead	Lag	Lead	Lag			Lead
Lead-Lag Optimize?	Yes	Yes	Yes	Yes			Yes
Vehicle Extension (s)	2.0	3.0	2.0	3.0	3.0	3.0	2.0
Recall Mode	None	C-Max	None	C-Max	None	None	None
Act Effct Green (s)	10.8	139.6		123.9	159.7	30.4	46.2
Actuated g/C Ratio	0.06	0.78		0.69	0.89	0.17	0.26
v/c Ratio	0.46	0.53		0.66	0.27	0.76	0.15
Control Delay	96.0	9.9		11.1	3.3	79.9	50.9
Queue Delay	0.0	0.0		0.0	0.0	0.0	0.0
Total Delay	96.0	9.9		11.1	3.3	79.9	50.9
LOS	F	A		B	A	E	D
Approach Delay		15.0		8.7		76.4	
Approach LOS		B		A		E	
Queue Length 50th (ft)	55	310		293	87	262	57
Queue Length 95th (ft)	103	451		560	118	317	97
Internal Link Dist (ft)		1499		1728		1009	
Turn Bay Length (ft)	500						400
Base Capacity (vph)	115	1400		1180	1339	697	425
Starvation Cap Reductn	0	0		0	0	0	0
Spillback Cap Reductn	0	0		0	0	0	0
Storage Cap Reductn	0	0		0	0	0	0
Reduced v/c Ratio	0.41	0.53		0.66	0.26	0.64	0.15

Intersection Summary			
Area Type:	Other		
Cycle Length: 180			
Actuated Cycle Length: 180			
Offset: 24 (13%), Referenced to phase 2:EBT and 6:WBT, Start of Green			
Natural Cycle: 75			
Control Type: Actuated-Coordinated			
Maximum v/c Ratio: 0.76			
Intersection Signal Delay: 24.9		Intersection LOS: C	
Intersection Capacity Utilization 56.5%		ICU Level of Service B	
Analysis Period (min) 15			

DocuSign Envelope ID: 5C03745C-4B01-4834-A65D-B77F558A4F46

Splits and Phases: 8: NC 146 (Long Shoals Rd) & Clayton Rd

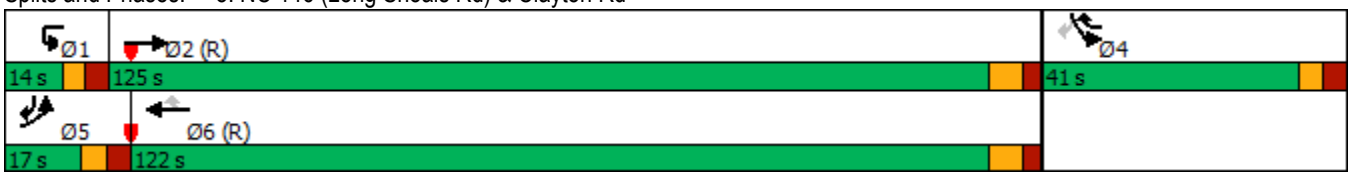

DocuSign Envelope ID: 5C03745C-4B01-4834-A65D-B77F558A4F46

Lane Group	EBU	EBT	EBR	WBL	WBT	NBL	NBR
Lane Configurations							
Traffic Volume (vph)	0	981	23	216	1029	47	481
Future Volume (vph)	0	981	23	216	1029	47	481
Ideal Flow (vphpl)	1900	1900	1900	1900	1900	1900	1900
Storage Length (ft)	325		0	325		200	0
Storage Lanes	1		0	1		1	1
Taper Length (ft)	25			25		25	
Lane Util. Factor	1.00	0.95	0.95	1.00	0.95	1.00	1.00
Frt		0.997					0.850
Flt Protected				0.950		0.950	
Satd. Flow (prot)	1759	3333	0	1671	3343	1752	1568
Flt Permitted				0.950		0.950	
Satd. Flow (perm)	1759	3333	0	1671	3343	1752	1568
Link Speed (mph)		45			45	35	
Link Distance (ft)		1808			1000	1062	
Travel Time (s)		27.4			15.2	20.7	
Peak Hour Factor	0.90	0.90	0.90	0.90	0.90	0.90	0.90
Heavy Vehicles (%)	8%	8%	8%	8%	8%	3%	3%
Adj. Flow (vph)	0	1090	26	240	1143	52	534
Shared Lane Traffic (%)							
Lane Group Flow (vph)	0	1116	0	240	1143	52	534
Enter Blocked Intersection	No	No	No	No	No	No	No
Lane Alignment	Left	Left	Right	Left	Left	Left	Right
Median Width(ft)		15			24	12	
Link Offset(ft)		0			0	0	
Crosswalk Width(ft)		16			16	16	
Two way Left Turn Lane							
Headway Factor	1.00	1.00	1.00	1.00	1.00	1.00	1.00
Turning Speed (mph)	9		9	15		15	9
Sign Control		Free			Free	Stop	

Intersection Summary			
Area Type:	Other		
Control Type: Unsignalized			
Intersection Capacity Utilization	64.3%	ICU Level of Service	C
Analysis Period (min)	15		

DocuSign Envelope ID: 5C03745C-4B01-4834-A65D-B77F558A4F46

Lane Group	EBL	EBT	EBR2	WBL	WBT	SEL	SER2	NWL
Lane Configurations								
Traffic Volume (vph)	230	1046	186	398	707	1194	288	250
Future Volume (vph)	230	1046	186	398	707	1194	288	250
Ideal Flow (vphpl)	1900	1900	1900	1900	1900	1900	1900	1900
Grade (%)		3%			-7%			
Storage Length (ft)	475			0		0		0
Storage Lanes	2			2		2		2
Taper Length (ft)	25			25		25		25
Lane Util. Factor	0.97	0.95	1.00	0.97	0.95	0.97	1.00	0.97
Frt			0.850				0.850	
Flt Protected	0.950			0.950		0.950		0.950
Satd. Flow (prot)	3080	3292	1420	3236	3593	3434	1525	3291
Flt Permitted	0.950			0.950		0.950		0.950
Satd. Flow (perm)	3080	3292	1420	3236	3593	3434	1525	3291
Right Turn on Red			Yes				Yes	
Satd. Flow (RTOR)			190				190	
Link Speed (mph)		45			45			
Link Distance (ft)		1000			418			
Travel Time (s)		15.2			6.3			
Peak Hour Factor	0.90	0.90	0.90	0.90	0.90	0.90	0.90	0.90
Heavy Vehicles (%)	12%	8%	12%	12%	4%	4%	8%	8%
Adj. Flow (vph)	256	1162	207	442	786	1327	320	278
Shared Lane Traffic (%)								
Lane Group Flow (vph)	256	1162	207	442	786	1327	320	278
Enter Blocked Intersection	No	No	No	No	No	No	No	No
Lane Alignment	Left	Left	Right	Left	Left	Left	Right	Left
Median Width(ft)		24			24			
Link Offset(ft)		0			0			
Crosswalk Width(ft)		16			16			
Two way Left Turn Lane								
Headway Factor	1.02	1.02	1.02	0.96	0.96	0.97	0.97	0.98
Turning Speed (mph)	15		9	15		15	9	15
Number of Detectors	1	2	1	1	2	1	1	1
Detector Template	Left	Thru	Right	Left	Thru	Left	Right	Left
Leading Detector (ft)	20	100	20	20	100	20	20	20
Trailing Detector (ft)	0	0	0	0	0	0	0	0
Detector 1 Position(ft)	0	0	0	0	0	0	0	0
Detector 1 Size(ft)	20	6	20	20	6	20	20	20
Detector 1 Type	Cl+Ex	Cl+Ex	Cl+Ex	Cl+Ex	Cl+Ex	Cl+Ex	Cl+Ex	Cl+Ex
Detector 1 Channel								
Detector 1 Extend (s)	0.0	0.0	0.0	0.0	0.0	0.0	0.0	0.0
Detector 1 Queue (s)	0.0	0.0	0.0	0.0	0.0	0.0	0.0	0.0
Detector 1 Delay (s)	0.0	0.0	0.0	0.0	0.0	0.0	0.0	0.0
Detector 2 Position(ft)		94			94			
Detector 2 Size(ft)		6			6			
Detector 2 Type		Cl+Ex			Cl+Ex			
Detector 2 Channel								
Detector 2 Extend (s)		0.0			0.0			
Turn Type	Prot	NA	Free	Prot	NA	Prot	Free	Prot

DocuSign Envelope ID: 5C03745C-4B01-4834-A65D-B77F558A4F46

Lane Group	EBL	EBT	EBR2	WBL	WBT	SEL	SER2	NWL
Protected Phases	5	2		1	6	4		8
Permitted Phases			Free				Free	
Detector Phase	5	2		1	6	4		8
Switch Phase								
Minimum Initial (s)	7.0	12.0		7.0	12.0	7.0		7.0
Minimum Split (s)	15.3	21.0		14.5	21.0	15.0		15.0
Total Split (s)	28.0	89.0		43.0	104.0	48.0		48.0
Total Split (%)	15.6%	49.4%		23.9%	57.8%	26.7%		26.7%
Maximum Green (s)	19.7	80.0		35.5	95.0	40.0		40.0
Yellow Time (s)	3.1	5.2		3.6	5.2	3.5		3.5
All-Red Time (s)	5.2	3.8		3.9	3.8	4.5		4.5
Lost Time Adjust (s)	-3.3	-4.0		-2.5	-4.0	-3.0		-3.0
Total Lost Time (s)	5.0	5.0		5.0	5.0	5.0		5.0
Lead/Lag	Lag	Lead		Lag	Lead			
Lead-Lag Optimize?	Yes	Yes		Yes	Yes			
Vehicle Extension (s)	2.0	6.0		2.0	6.0	2.0		2.0
Minimum Gap (s)	0.2	3.0		0.2	3.0	0.2		0.2
Time Before Reduce (s)	0.0	15.0		0.0	15.0	0.0		0.0
Time To Reduce (s)	0.0	30.0		0.0	30.0	0.0		0.0
Recall Mode	None	C-Max		None	C-Max	None		None
Act Effct Green (s)	23.0	84.0	180.0	38.0	99.0	43.0	180.0	43.0
Actuated g/C Ratio	0.13	0.47	1.00	0.21	0.55	0.24	1.00	0.24
v/c Ratio	0.65	0.76	0.15	0.65	0.40	1.62	0.21	0.35
Control Delay	83.3	34.3	0.2	58.4	13.6	324.2	0.3	58.5
Queue Delay	0.0	14.2	0.0	1.9	0.8	9.6	0.0	0.0
Total Delay	83.3	48.5	0.2	60.2	14.4	333.8	0.3	58.5
LOS	F	D	A	E	B	F	A	E
Approach Delay		47.8			30.9			
Approach LOS		D			C			
Queue Length 50th (ft)	154	561	0	258	140	~1155	0	142
Queue Length 95th (ft)	208	647	0	327	151	#1292	0	190
Internal Link Dist (ft)		920			338			
Turn Bay Length (ft)	475							
Base Capacity (vph)	393	1536	1420	683	1976	820	1525	786
Starvation Cap Reductn	0	0	0	117	811	0	0	0
Spillback Cap Reductn	0	378	0	0	0	546	0	0
Storage Cap Reductn	0	0	0	0	0	0	0	0
Reduced v/c Ratio	0.65	1.00	0.15	0.78	0.67	4.84	0.21	0.35

Intersection Summary			
Area Type:	Other		
Cycle Length: 180			
Actuated Cycle Length: 180			
Offset: 0 (0%), Referenced to phase 2:EBT and 6:WBT, Start of Green, Master Intersection			
Natural Cycle: 150			
Control Type: Actuated-Coordinated			
Maximum v/c Ratio: 1.64			
Intersection Signal Delay: 120.3		Intersection LOS: F	
Intersection Capacity Utilization 86.8%		ICU Level of Service E	

DocuSign Envelope ID: 5C03745C-4B01-4834-A65D-B77F558A4F46

Analysis Period (min) 15

~ Volume exceeds capacity, queue is theoretically infinite.
Queue shown is maximum after two cycles.

95th percentile volume exceeds capacity, queue may be longer.
Queue shown is maximum after two cycles.

Splits and Phases: 10: I-26 Ramp & NC 146 (Long Shoals Rd)

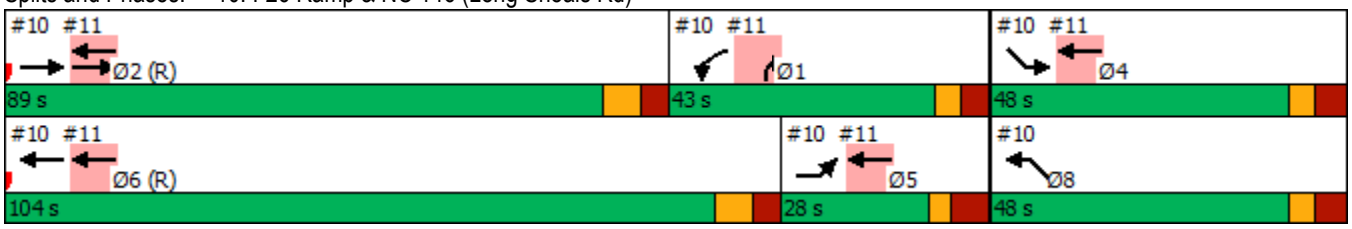

DocuSign Envelope ID: 5C03745C-4B01-4834-A65D-B77F558A4F46

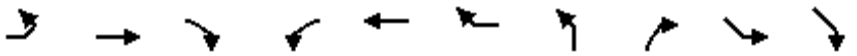

Lane Group	EBL	EBT	EBR	WBL	WBT	WBR	NBL	NBR	SEL	SER	Ø4	Ø5
Lane Configurations		↑↑			↑↑	↱		↱↱				
Traffic Volume (vph)	0	2240	0	0	1105	645	0	795	0	0		
Future Volume (vph)	0	2240	0	0	1105	645	0	795	0	0		
Ideal Flow (vphpl)	1900	1900	1900	1900	1900	1900	1900	1900	1900	1900		
Storage Length (ft)	0		0	0		275	0	0	0	0		
Storage Lanes	0		0	0		1	0	2	0	0		
Taper Length (ft)	25			25			25		25			
Lane Util. Factor	1.00	0.95	1.00	1.00	0.95	1.00	1.00	0.88	1.00	1.00		
Frt						0.850		0.850				
Flt Protected												
Satd. Flow (prot)	0	3471	0	0	3471	1442	0	2733	0	0		
Flt Permitted												
Satd. Flow (perm)	0	3471	0	0	3471	1442	0	2733	0	0		
Right Turn on Red			No			No		No				
Satd. Flow (RTOR)												
Link Speed (mph)		45			45		45		45			
Link Distance (ft)		418			593		396		464			
Travel Time (s)		6.3			9.0		6.0		7.0			
Peak Hour Factor	0.90	0.90	0.90	0.90	0.90	0.90	0.90	0.90	0.90	0.90		
Heavy Vehicles (%)	2%	4%	2%	2%	4%	12%	2%	4%	2%	2%		
Adj. Flow (vph)	0	2489	0	0	1228	717	0	883	0	0		
Shared Lane Traffic (%)												
Lane Group Flow (vph)	0	2489	0	0	1228	717	0	883	0	0		
Enter Blocked Intersection	No	No	No	No	No	No	No	No	No	No		
Lane Alignment	Left	L NA	Right	Left	Right	Right	Left	R NA	Left	Right		
Median Width(ft)		0			24		0		0			
Link Offset(ft)		0			0		0		0			
Crosswalk Width(ft)		16			16		16		16			
Two way Left Turn Lane												
Headway Factor	1.00	1.00	1.00	1.00	1.00	1.00	1.00	1.00	1.00	1.00		
Turning Speed (mph)	15		9	15		9	15	9	15	9		
Number of Detectors		2			2	1		1				
Detector Template		Thru			Thru	Right		Right				
Leading Detector (ft)		100			100	20		20				
Trailing Detector (ft)		0			0	0		0				
Detector 1 Position(ft)		0			0	0		0				
Detector 1 Size(ft)		6			6	20		20				
Detector 1 Type		Cl+Ex			Cl+Ex	Cl+Ex		Cl+Ex				
Detector 1 Channel												
Detector 1 Extend (s)		0.0			0.0	0.0		0.0				
Detector 1 Queue (s)		0.0			0.0	0.0		0.0				
Detector 1 Delay (s)		0.0			0.0	0.0		0.0				
Detector 2 Position(ft)		94			94							
Detector 2 Size(ft)		6			6							
Detector 2 Type		Cl+Ex			Cl+Ex							
Detector 2 Channel												
Detector 2 Extend (s)		0.0			0.0							
Turn Type		NA			NA	Free		Prot				
Protected Phases		2			2 4 5 6			1			4	5

DocuSign Envelope ID: 5C03745C-4B01-4834-A65D-B77F558A4F46

Lane Group	Ø6	Ø8
Lane Configurations		
Traffic Volume (vph)		
Future Volume (vph)		
Ideal Flow (vphpl)		
Storage Length (ft)		
Storage Lanes		
Taper Length (ft)		
Lane Util. Factor		
Frt		
Flt Protected		
Satd. Flow (prot)		
Flt Permitted		
Satd. Flow (perm)		
Right Turn on Red		
Satd. Flow (RTOR)		
Link Speed (mph)		
Link Distance (ft)		
Travel Time (s)		
Peak Hour Factor		
Heavy Vehicles (%)		
Adj. Flow (vph)		
Shared Lane Traffic (%)		
Lane Group Flow (vph)		
Enter Blocked Intersection		
Lane Alignment		
Median Width(ft)		
Link Offset(ft)		
Crosswalk Width(ft)		
Two way Left Turn Lane		
Headway Factor		
Turning Speed (mph)		
Number of Detectors		
Detector Template		
Leading Detector (ft)		
Trailing Detector (ft)		
Detector 1 Position(ft)		
Detector 1 Size(ft)		
Detector 1 Type		
Detector 1 Channel		
Detector 1 Extend (s)		
Detector 1 Queue (s)		
Detector 1 Delay (s)		
Detector 2 Position(ft)		
Detector 2 Size(ft)		
Detector 2 Type		
Detector 2 Channel		
Detector 2 Extend (s)		
Turn Type		
Protected Phases	6	8

DocuSign Envelope ID: 5C03745C-4B01-4834-A65D-B77F558A4F46

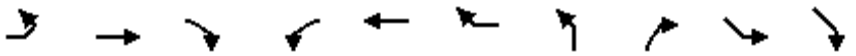

Lane Group	EBL	EBT	EBR	WBL	WBT	WBR	NBL	NBR	SEL	SER	Ø4	Ø5
Permitted Phases						Free						
Detector Phase		2			2 4 5 6			1				
Switch Phase												
Minimum Initial (s)		12.0						7.0			7.0	7.0
Minimum Split (s)		21.0						14.5			15.0	15.3
Total Split (s)		89.0						43.0			48.0	28.0
Total Split (%)		49.4%						23.9%			27%	16%
Maximum Green (s)		80.0						35.5			40.0	19.7
Yellow Time (s)		5.2						3.6			3.5	3.1
All-Red Time (s)		3.8						3.9			4.5	5.2
Lost Time Adjust (s)		0.0						0.0				
Total Lost Time (s)		9.0						7.5				
Lead/Lag		Lead						Lag				Lag
Lead-Lag Optimize?		Yes						Yes				Yes
Vehicle Extension (s)		6.0						2.0			2.0	2.0
Minimum Gap (s)		3.0						0.2			0.2	0.2
Time Before Reduce (s)		15.0						0.0			0.0	0.0
Time To Reduce (s)		30.0						0.0			0.0	0.0
Recall Mode		C-Max						None			None	None
Act Effct Green (s)		80.0			180.0	180.0		35.5				
Actuated g/C Ratio		0.44			1.00	1.00		0.20				
v/c Ratio		1.61			0.35	0.50		1.64				
Control Delay		304.8			0.1	0.9		336.7				
Queue Delay		0.8			0.0	0.0		6.5				
Total Delay		305.6			0.1	0.9		343.2				
LOS		F			A	A		F				
Approach Delay		305.6			0.4		343.2					
Approach LOS		F			A		F					
Queue Length 50th (ft)		~2240			0	0		~852				
Queue Length 95th (ft)		m#1628			m0	m0		#1003				
Internal Link Dist (ft)		338			513		316		384			
Turn Bay Length (ft)						275						
Base Capacity (vph)		1542			3471	1442		539				
Starvation Cap Reductn		67			0	0		0				
Spillback Cap Reductn		289			41	0		258				
Storage Cap Reductn		0			0	0		0				
Reduced v/c Ratio		1.99			0.36	0.50		3.14				

Intersection Summary			
Area Type:	Other		
Cycle Length: 180			
Actuated Cycle Length: 180			
Offset: 0 (0%), Referenced to phase 2:EBT and 6:WBT, Start of Green, Master Intersection			
Natural Cycle: 150			
Control Type: Actuated-Coordinated			
Maximum v/c Ratio: 1.64			
Intersection Signal Delay: 200.2		Intersection LOS: F	
Intersection Capacity Utilization 103.5%		ICU Level of Service G	
Analysis Period (min) 15			

DocuSign Envelope ID: 5C03745C-4B01-4834-A65D-B77F558A4F46

Lane Group	Ø6	Ø8
Permitted Phases		
Detector Phase		
Switch Phase		
Minimum Initial (s)	12.0	7.0
Minimum Split (s)	21.0	15.0
Total Split (s)	104.0	48.0
Total Split (%)	58%	27%
Maximum Green (s)	95.0	40.0
Yellow Time (s)	5.2	3.5
All-Red Time (s)	3.8	4.5
Lost Time Adjust (s)		
Total Lost Time (s)		
Lead/Lag	Lead	
Lead-Lag Optimize?	Yes	
Vehicle Extension (s)	6.0	2.0
Minimum Gap (s)	3.0	0.2
Time Before Reduce (s)	15.0	0.0
Time To Reduce (s)	30.0	0.0
Recall Mode	C-Max	None
Act Effct Green (s)		
Actuated g/C Ratio		
v/c Ratio		
Control Delay		
Queue Delay		
Total Delay		
LOS		
Approach Delay		
Approach LOS		
Queue Length 50th (ft)		
Queue Length 95th (ft)		
Internal Link Dist (ft)		
Turn Bay Length (ft)		
Base Capacity (vph)		
Starvation Cap Reductn		
Spillback Cap Reductn		
Storage Cap Reductn		
Reduced v/c Ratio		

Intersection Summary

DocuSign Envelope ID: 5C03745C-4B01-4834-A65D-B77F558A4F46

~ Volume exceeds capacity, queue is theoretically infinite.
Queue shown is maximum after two cycles.

95th percentile volume exceeds capacity, queue may be longer.
Queue shown is maximum after two cycles.

m Volume for 95th percentile queue is metered by upstream signal.

Splits and Phases: 11: I-26 NWB Ramp & NC 146 (Long Shoals Rd)

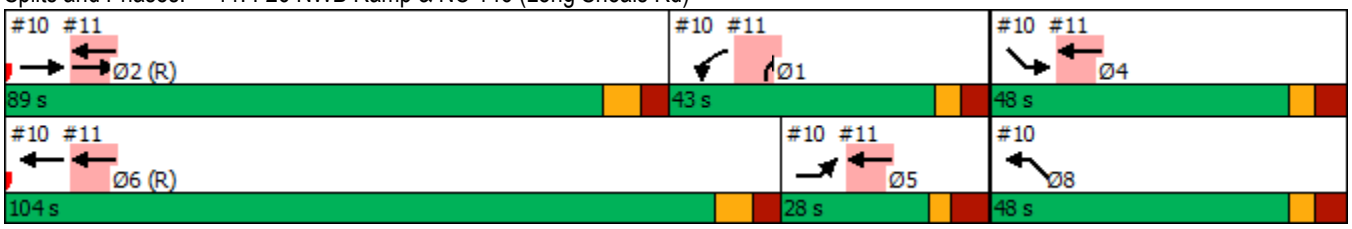

DocuSign Envelope ID: 5C03745C-4B01-4834-A65D-B77F558A4F46

Lane Group	EBL	EBT	EBR	WBL	WBT	WBR	NBL	NBT	NBR	SBL	SBT	SBR
Lane Configurations												
Traffic Volume (vph)	856	2037	142	26	1223	391	51	27	15	357	43	476
Future Volume (vph)	856	2037	142	26	1223	391	51	27	15	357	43	476
Ideal Flow (vphpl)	1900	1900	1900	1900	1900	1900	1900	1900	1900	1900	1900	1900
Grade (%)		6%			-6%			11%			7%	
Storage Length (ft)	350		400	250		225	0		0	450		0
Storage Lanes	2		1	1		1	0		0	1		1
Taper Length (ft)	25			25			25			25		
Lane Util. Factor	0.97	0.95	1.00	1.00	0.95	1.00	1.00	1.00	1.00	0.95	0.95	1.00
Frt			0.850			0.850		0.978				0.850
Flt Protected	0.950			0.950				0.973		0.950	0.962	
Satd. Flow (prot)	3266	3367	1506	1788	3575	1599	0	1627	0	1561	1581	1470
Flt Permitted	0.950			0.950				0.973		0.950	0.962	
Satd. Flow (perm)	3266	3367	1506	1788	3575	1599	0	1627	0	1561	1581	1470
Right Turn on Red			No			No			No			No
Satd. Flow (RTOR)												
Link Speed (mph)		45			45			25			25	
Link Distance (ft)		593			1582			722			992	
Travel Time (s)		9.0			24.0			19.7			27.1	
Peak Hour Factor	0.90	0.90	0.90	0.90	0.90	0.90	0.90	0.90	0.90	0.90	0.90	0.90
Heavy Vehicles (%)	4%	4%	4%	4%	4%	4%	5%	5%	5%	6%	6%	6%
Adj. Flow (vph)	951	2263	158	29	1359	434	57	30	17	397	48	529
Shared Lane Traffic (%)										44%		
Lane Group Flow (vph)	951	2263	158	29	1359	434	0	104	0	222	223	529
Enter Blocked Intersection	No	No	No	No	No	No	No	No	No	No	No	No
Lane Alignment	Left	Left	Right	Left	Left	Right	Left	Left	Right	Left	Left	Right
Median Width(ft)		24			24			0			12	
Link Offset(ft)		0			0			0			0	
Crosswalk Width(ft)		16			16			16			16	
Two way Left Turn Lane												
Headway Factor	1.04	1.04	1.04	0.96	0.96	0.96	1.08	1.08	1.08	1.05	1.05	1.05
Turning Speed (mph)	15		9	15		9	15		9	15		9
Number of Detectors	1	2	1	1	2	1	1	2		1	2	1
Detector Template	Left	Thru	Right	Left	Thru	Right	Left	Thru		Left	Thru	Right
Leading Detector (ft)	20	100	20	20	100	20	20	100		20	100	20
Trailing Detector (ft)	0	0	0	0	0	0	0	0		0	0	0
Detector 1 Position(ft)	0	0	0	0	0	0	0	0		0	0	0
Detector 1 Size(ft)	20	6	20	20	6	20	20	6		20	6	20
Detector 1 Type	Cl+Ex	Cl+Ex	Cl+Ex	Cl+Ex	Cl+Ex	Cl+Ex	Cl+Ex	Cl+Ex		Cl+Ex	Cl+Ex	Cl+Ex
Detector 1 Channel												
Detector 1 Extend (s)	0.0	0.0	0.0	0.0	0.0	0.0	0.0	0.0		0.0	0.0	0.0
Detector 1 Queue (s)	0.0	0.0	0.0	0.0	0.0	0.0	0.0	0.0		0.0	0.0	0.0
Detector 1 Delay (s)	0.0	0.0	0.0	0.0	0.0	0.0	0.0	0.0		0.0	0.0	0.0
Detector 2 Position(ft)		94			94			94			94	
Detector 2 Size(ft)		6			6			6			6	
Detector 2 Type		Cl+Ex			Cl+Ex			Cl+Ex			Cl+Ex	
Detector 2 Channel												
Detector 2 Extend (s)		0.0			0.0			0.0			0.0	
Turn Type	Prot	NA	pm+ov	Prot	NA	pm+ov	Split	NA		Split	NA	pm+ov

DocuSign Envelope ID: 5C03745C-4B01-4834-A65D-B77F558A4F46

Lane Group	EBL	EBT	EBR	WBL	WBT	WBR	NBL	NBT	NBR	SBL	SBT	SBR
Protected Phases	5	2	4	1	6	3	4	4		3	3	5
Permitted Phases			2			6						3
Detector Phase	5	2	4	1	6	3	4	4		3	3	5
Switch Phase												
Minimum Initial (s)	7.0	12.0	7.0	7.0	12.0	7.0	7.0	7.0		7.0	7.0	7.0
Minimum Split (s)	13.3	20.7	39.3	13.3	32.6	13.4	39.3	39.3		13.4	13.4	13.3
Total Split (s)	58.0	120.0	16.0	14.0	76.0	30.0	16.0	16.0		30.0	30.0	58.0
Total Split (%)	32.2%	66.7%	8.9%	7.8%	42.2%	16.7%	8.9%	8.9%		16.7%	16.7%	32.2%
Maximum Green (s)	51.7	114.3	9.7	7.7	69.4	23.6	9.7	9.7		23.6	23.6	51.7
Yellow Time (s)	3.0	4.1	3.0	3.1	5.1	3.0	3.0	3.0		3.0	3.0	3.0
All-Red Time (s)	3.3	1.6	3.3	3.2	1.5	3.4	3.3	3.3		3.4	3.4	3.3
Lost Time Adjust (s)	-1.3	-0.7	-1.3	-1.3	-1.6	-1.4		-1.3		-1.4	-1.4	-1.3
Total Lost Time (s)	5.0	5.0	5.0	5.0	5.0	5.0		5.0		5.0	5.0	5.0
Lead/Lag	Lag	Lag	Lead	Lead	Lead	Lag	Lead	Lead		Lag	Lag	Lag
Lead-Lag Optimize?	Yes	Yes	Yes	Yes	Yes	Yes	Yes	Yes		Yes	Yes	Yes
Vehicle Extension (s)	3.0	6.0	3.0	2.0	6.0	3.0	3.0	3.0		3.0	3.0	3.0
Minimum Gap (s)	0.2	3.0	0.2	0.2	3.0	0.2	0.2	0.2		0.2	0.2	0.2
Time Before Reduce (s)	0.0	20.0	0.0	0.0	20.0	0.0	0.0	0.0		0.0	0.0	0.0
Time To Reduce (s)	0.0	30.0	0.0	0.0	30.0	0.0	0.0	0.0		0.0	0.0	0.0
Recall Mode	None	C-Max	None	None	C-Max	None	None	None		None	None	None
Walk Time (s)		7.0	7.0		7.0		7.0	7.0				
Flash Dont Walk (s)		8.0	26.0		19.0		26.0	26.0				
Pedestrian Calls (#/hr)		0	0		0		0	0				
Act Effct Green (s)	53.0	118.0	134.0	8.6	71.0	101.0		11.0		25.0	25.0	78.0
Actuated g/C Ratio	0.29	0.66	0.74	0.05	0.39	0.56		0.06		0.14	0.14	0.43
v/c Ratio	0.99	1.03	0.14	0.34	0.96	0.48		1.05		1.03	1.02	0.83
Control Delay	47.0	24.5	0.4	93.9	69.5	26.1		180.4		141.1	138.8	43.7
Queue Delay	37.6	30.7	0.0	0.0	0.0	0.0		0.0		0.0	0.0	0.0
Total Delay	84.5	55.2	0.4	93.9	69.5	26.1		180.4		141.1	138.8	43.7
LOS	F	E	A	F	E	C		F		F	F	D
Approach Delay		60.9			59.6			180.4			87.7	
Approach LOS		E			E			F			F	
Queue Length 50th (ft)	564	~1514	6	34	825	302		~133		~292	~291	431
Queue Length 95th (ft)	m280	m92	m4	74	#980	400		#272		#490	#489	572
Internal Link Dist (ft)		513			1502			642			912	
Turn Bay Length (ft)	350		400	250		225				450		
Base Capacity (vph)	961	2207	1121	89	1410	897		99		216	219	637
Starvation Cap Reductn	123	637	0	0	0	0		0		0	0	0
Spillback Cap Reductn	0	0	0	0	0	0		0		0	0	0
Storage Cap Reductn	0	0	0	0	0	0		0		0	0	0
Reduced v/c Ratio	1.13	1.44	0.14	0.33	0.96	0.48		1.05		1.03	1.02	0.83

Intersection Summary	
Area Type:	Other
Cycle Length: 180	
Actuated Cycle Length: 180	
Offset: 18 (10%), Referenced to phase 2:EBT and 6:WBT, Start of Green	
Natural Cycle: 150	
Control Type: Actuated-Coordinated	

DocuSign Envelope ID: 5C03745C-4B01-4834-A65D-B77F558A4F46

Maximum v/c Ratio: 1.05	
Intersection Signal Delay: 66.7	Intersection LOS: E
Intersection Capacity Utilization 91.5%	ICU Level of Service F
Analysis Period (min) 15	

~ Volume exceeds capacity, queue is theoretically infinite.
Queue shown is maximum after two cycles.

95th percentile volume exceeds capacity, queue may be longer.
Queue shown is maximum after two cycles.

m Volume for 95th percentile queue is metered by upstream signal.

Splits and Phases: 12: Skyland Inn Dr/Schenck Pkwy & NC 146 (Long Shoals Rd)

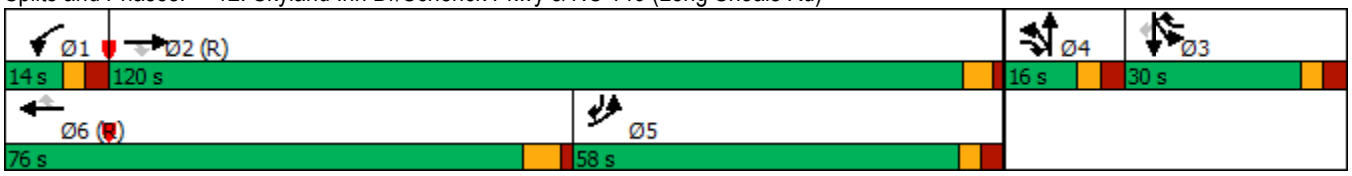

DocuSign Envelope ID: 5C03745C-4B01-4834-A65D-B77F558A4F46

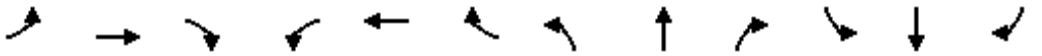

Lane Group	EBL	EBT	EBR	WBL	WBT	WBR	NBL	NBT	NBR	SBL	SBT	SBR
Lane Configurations												
Traffic Volume (vph)	211	307	121	219	278	440	66	54	132	185	37	81
Future Volume (vph)	211	307	121	219	278	440	66	54	132	185	37	81
Ideal Flow (vphpl)	1900	1900	1900	1900	1900	1900	1900	1900	1900	1900	1900	1900
Storage Length (ft)	0		200	0		200	0		200	0		200
Storage Lanes	0		1	0		1	0		1	0		1
Taper Length (ft)	25			25			25			25		
Lane Util. Factor	1.00	1.00	1.00	1.00	1.00	1.00	1.00	1.00	1.00	1.00	1.00	1.00
Frt			0.850			0.850			0.850			0.850
Flt Protected		0.980			0.978			0.973			0.960	
Satd. Flow (prot)	0	1773	1538	0	1770	1538	0	1795	1568	0	1754	1553
Flt Permitted		0.980			0.978			0.973			0.960	
Satd. Flow (perm)	0	1773	1538	0	1770	1538	0	1795	1568	0	1754	1553
Link Speed (mph)		35			35			35			35	
Link Distance (ft)		2787			1029			961			1055	
Travel Time (s)		54.3			20.0			18.7			20.6	
Peak Hour Factor	0.90	0.90	0.90	0.90	0.90	0.90	0.90	0.90	0.90	0.90	0.90	0.90
Heavy Vehicles (%)	5%	5%	5%	5%	5%	5%	3%	3%	3%	4%	4%	4%
Adj. Flow (vph)	234	341	134	243	309	489	73	60	147	206	41	90
Shared Lane Traffic (%)												
Lane Group Flow (vph)	0	575	134	0	552	489	0	133	147	0	247	90
Enter Blocked Intersection	No	No	No	No	No	No	No	No	No	No	No	No
Lane Alignment	Left	Left	Right	Left	Left	Right	Left	Left	Right	Left	Left	Right
Median Width(ft)		0			0			0			0	
Link Offset(ft)		0			0			0			0	
Crosswalk Width(ft)		16			16			16			16	
Two way Left Turn Lane												
Headway Factor	1.00	1.00	1.00	1.00	1.00	1.00	1.00	1.00	1.00	1.00	1.00	1.00
Turning Speed (mph)	15		9	15		9	15		9	15		9
Sign Control		Yield			Yield			Yield			Yield	

Intersection Summary			
Area Type:	Other		
Control Type: Roundabout			
Intersection Capacity Utilization 83.4%		ICU Level of Service E	
Analysis Period (min) 15			

DocuSign Envelope ID: 5C03745C-4B01-4834-A65D-B77F558A4F46

Lane Group	NBL	NBR	SET	SER	NWL	NWT
Lane Configurations						
Traffic Volume (vph)	0	0	0	414	0	384
Future Volume (vph)	0	0	0	414	0	384
Ideal Flow (vphpl)	1900	1900	1900	1900	1900	1900
Lane Util. Factor	1.00	1.00	1.00	*1.00	1.00	0.91
Frt						
Flt Protected						
Satd. Flow (prot)	0	0	0	3393	0	4893
Flt Permitted						
Satd. Flow (perm)	0	0	0	3393	0	4893
Link Speed (mph)	45		45			25
Link Distance (ft)	263		323			131
Travel Time (s)	4.0		4.9			3.6
Peak Hour Factor	0.90	0.90	0.90	0.90	0.90	0.90
Heavy Vehicles (%)	2%	2%	2%	12%	2%	6%
Adj. Flow (vph)	0	0	0	460	0	427
Shared Lane Traffic (%)						
Lane Group Flow (vph)	0	0	0	460	0	427
Enter Blocked Intersection	No	No	No	No	No	No
Lane Alignment	Left	Right	Left	Right	Left	Left
Median Width(ft)	0		8			0
Link Offset(ft)	0		0			0
Crosswalk Width(ft)	16		16			16
Two way Left Turn Lane						
Headway Factor	1.00	1.00	1.00	1.00	1.00	1.00
Turning Speed (mph)	15	9		45	15	
Sign Control	Free		Free			Free

Intersection Summary			
Area Type:	Other		
Control Type: Unsignalized			
Intersection Capacity Utilization 17.8%		ICU Level of Service A	
Analysis Period (min) 15			

* User Entered Value

DocuSign Envelope ID: 5C03745C-4B01-4834-A65D-B77F558A4F46

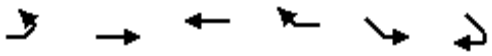

Lane Group	EBL	EBT	WBT	WBR	SEL	SER
Lane Configurations						
Traffic Volume (vph)	0	567	0	261	0	0
Future Volume (vph)	0	567	0	261	0	0
Ideal Flow (vphpl)	1900	1900	1900	1900	1900	1900
Grade (%)		2%	0%		0%	
Lane Util. Factor	1.00	1.00	1.00	*1.00	1.00	1.00
Frt						
Flt Protected						
Satd. Flow (prot)	0	1758	0	3393	0	0
Flt Permitted						
Satd. Flow (perm)	0	1758	0	3393	0	0
Link Speed (mph)		25	45		45	
Link Distance (ft)		718	860		674	
Travel Time (s)		19.6	13.0		10.2	
Peak Hour Factor	0.90	0.90	0.90	0.90	0.90	0.90
Heavy Vehicles (%)	2%	7%	2%	12%	2%	2%
Adj. Flow (vph)	0	630	0	290	0	0
Shared Lane Traffic (%)						
Lane Group Flow (vph)	0	630	0	290	0	0
Enter Blocked Intersection	No	No	No	No	No	No
Lane Alignment	Left	Left	Left	Right	Left	Right
Median Width(ft)		0	12		0	
Link Offset(ft)		0	0		0	
Crosswalk Width(ft)		16	16		16	
Two way Left Turn Lane						
Headway Factor	1.01	1.01	1.00	1.00	1.00	1.00
Turning Speed (mph)	15			45	15	9
Sign Control		Free	Free		Free	

Intersection Summary			
Area Type:	Other		
Control Type: Unsignalized			
Intersection Capacity Utilization 33.2%		ICU Level of Service A	
Analysis Period (min) 15			
* User Entered Value			

DocuSign Envelope ID: 5C03745C-4B01-4834-A65D-B77F558A4F46



Lane Group	EBT	EBR	WBL	WBT	NBL	NBR
Lane Configurations						
Traffic Volume (vph)	0	0	0	645	230	0
Future Volume (vph)	0	0	0	645	230	0
Ideal Flow (vphpl)	1900	1900	1900	1900	1900	1900
Lane Util. Factor	1.00	1.00	1.00	1.00	*1.00	1.00
Frt						
Flt Protected						
Satd. Flow (prot)	0	0	0	1696	3393	0
Flt Permitted						
Satd. Flow (perm)	0	0	0	1696	3393	0
Link Speed (mph)	45			45	45	
Link Distance (ft)	408			464	376	
Travel Time (s)	6.2			7.0	5.7	
Peak Hour Factor	0.90	0.90	0.90	0.90	0.90	0.90
Heavy Vehicles (%)	2%	2%	2%	12%	12%	2%
Adj. Flow (vph)	0	0	0	717	256	0
Shared Lane Traffic (%)						
Lane Group Flow (vph)	0	0	0	717	256	0
Enter Blocked Intersection	No	No	No	No	No	No
Lane Alignment	Left	Right	Left	Left	Left	Right
Median Width(ft)	0			0	24	
Link Offset(ft)	0			0	0	
Crosswalk Width(ft)	16			16	16	
Two way Left Turn Lane						
Headway Factor	1.00	1.00	1.00	1.00	1.00	1.00
Turning Speed (mph)		9	15		45	9
Sign Control	Free			Yield	Free	

Intersection Summary			
Area Type:	Other		
Control Type: Unsignalized			
Intersection Capacity Utilization 47.2%		ICU Level of Service A	
Analysis Period (min) 15			

* User Entered Value

DocuSign Envelope ID: 5C03745C-4B01-4834-A65D-B77F558A4F46

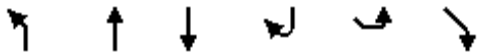

Lane Group	NBL	NBT	SBT	SBR	SEL	SER
Lane Configurations						
Traffic Volume (vph)	250	795	0	0	0	0
Future Volume (vph)	250	795	0	0	0	0
Ideal Flow (vphpl)	1900	1900	1900	1900	1900	1900
Lane Util. Factor	0.91	0.91	1.00	1.00	1.00	1.00
Frt						
Flt Protected	0.950	0.998				
Satd. Flow (prot)	1521	3314	0	0	0	0
Flt Permitted	0.950	0.998				
Satd. Flow (perm)	1521	3314	0	0	0	0
Link Speed (mph)		45	45		45	
Link Distance (ft)		214	396		556	
Travel Time (s)		3.2	6.0		8.4	
Peak Hour Factor	0.90	0.90	0.90	0.90	0.90	0.90
Heavy Vehicles (%)	8%	4%	2%	2%	2%	2%
Adj. Flow (vph)	278	883	0	0	0	0
Shared Lane Traffic (%)	10%					
Lane Group Flow (vph)	250	911	0	0	0	0
Enter Blocked Intersection	No	No	No	No	No	No
Lane Alignment	Right	R NA	Left	Right	Left	Right
Median Width(ft)		12	12		0	
Link Offset(ft)		0	0		0	
Crosswalk Width(ft)		16	16		16	
Two way Left Turn Lane						
Headway Factor	1.00	1.00	1.00	1.00	1.00	1.00
Turning Speed (mph)	45			9	15	9
Sign Control		Free	Free		Free	

Intersection Summary			
Area Type:	Other		
Control Type: Unsignalized			
Intersection Capacity Utilization 25.3%		ICU Level of Service A	
Analysis Period (min) 15			

DocuSign Envelope ID: 5C03745C-4B01-4834-A65D-B77F558A4F46

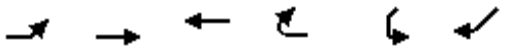

Lane Group	EBL	EBT	WBT	WBR	SWL	SWR
Lane Configurations						
Traffic Volume (vph)	331	302	0	0	0	0
Future Volume (vph)	331	302	0	0	0	0
Ideal Flow (vphpl)	1900	1900	1900	1900	1900	1900
Lane Util. Factor	1.00	1.00	1.00	1.00	1.00	1.00
Frt						
Flt Protected	0.950					
Satd. Flow (prot)	1719	1696	0	0	0	0
Flt Permitted	0.950					
Satd. Flow (perm)	1719	1696	0	0	0	0
Link Speed (mph)		35	35		35	
Link Distance (ft)		102	290		114	
Travel Time (s)		2.0	5.6		2.2	
Peak Hour Factor	0.90	0.90	0.90	0.90	0.90	0.90
Heavy Vehicles (%)	5%	12%	2%	2%	2%	2%
Adj. Flow (vph)	368	336	0	0	0	0
Shared Lane Traffic (%)						
Lane Group Flow (vph)	368	336	0	0	0	0
Enter Blocked Intersection	No	No	No	No	No	No
Lane Alignment	Left	Left	Left	Right	Left	Right
Median Width(ft)		12	12		0	
Link Offset(ft)		0	0		0	
Crosswalk Width(ft)		16	16		16	
Two way Left Turn Lane						
Headway Factor	1.00	1.00	1.00	1.00	1.00	1.00
Turning Speed (mph)	15			9	15	9
Sign Control		Free	Free		Free	

Intersection Summary			
Area Type:	Other		
Control Type: Unsignalized			
Intersection Capacity Utilization 48.9%		ICU Level of Service A	
Analysis Period (min) 15			

DocuSign Envelope ID: 5C03745C-4B01-4834-A65D-B77F558A4F46

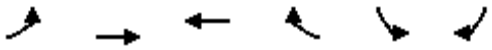

Lane Group	EBL	EBT	WBT	WBR	SBL	SBR
Lane Configurations						
Traffic Volume (vph)	0	331	0	0	1	0
Future Volume (vph)	0	331	0	0	1	0
Ideal Flow (vphpl)	1900	1900	1900	1900	1900	1900
Lane Util. Factor	1.00	1.00	1.00	1.00	1.00	1.00
Frt						
Flt Protected					0.950	
Satd. Flow (prot)	0	1696	0	0	1612	0
Flt Permitted					0.950	
Satd. Flow (perm)	0	1696	0	0	1612	0
Link Speed (mph)		35	35		35	
Link Distance (ft)		195	217		313	
Travel Time (s)		3.8	4.2		6.1	
Peak Hour Factor	0.90	0.90	0.90	0.90	0.90	0.90
Heavy Vehicles (%)	2%	12%	2%	2%	12%	2%
Adj. Flow (vph)	0	368	0	0	1	0
Shared Lane Traffic (%)						
Lane Group Flow (vph)	0	368	0	0	1	0
Enter Blocked Intersection	No	No	No	No	No	No
Lane Alignment	Left	Left	Left	Right	Left	Right
Median Width(ft)		0	0		12	
Link Offset(ft)		0	0		0	
Crosswalk Width(ft)		16	16		16	
Two way Left Turn Lane						
Headway Factor	1.00	1.00	1.00	1.00	1.00	1.00
Turning Speed (mph)	15			9	15	9
Sign Control		Free	Free		Yield	

Intersection Summary			
Area Type:	Other		
Control Type: Unsignalized			
Intersection Capacity Utilization 30.0%		ICU Level of Service A	
Analysis Period (min) 15			

DocuSign Envelope ID: 5C03745C-4B01-4834-A65D-B77F558A4F46



Lane Group	EBT	EBR	WBL	WBT	NEL	NER
Lane Configurations						
Traffic Volume (vph)	0	0	1	417	0	0
Future Volume (vph)	0	0	1	417	0	0
Ideal Flow (vphpl)	1900	1900	1900	1900	1900	1900
Lane Util. Factor	1.00	1.00	1.00	1.00	1.00	1.00
Frt						
Flt Protected						
Satd. Flow (prot)	0	0	0	1809	0	0
Flt Permitted						
Satd. Flow (perm)	0	0	0	1809	0	0
Link Speed (mph)	35			35	35	
Link Distance (ft)	100			205	150	
Travel Time (s)	1.9			4.0	2.9	
Peak Hour Factor	0.90	0.90	0.90	0.90	0.90	0.90
Heavy Vehicles (%)	2%	2%	12%	5%	2%	2%
Adj. Flow (vph)	0	0	1	463	0	0
Shared Lane Traffic (%)						
Lane Group Flow (vph)	0	0	0	464	0	0
Enter Blocked Intersection	No	No	No	No	No	No
Lane Alignment	Left	Right	Left	Left	Left	Right
Median Width(ft)	0			0	0	
Link Offset(ft)	0			0	0	
Crosswalk Width(ft)	16			16	16	
Two way Left Turn Lane						
Headway Factor	1.00	1.00	1.00	1.00	1.00	1.00
Turning Speed (mph)		9	15		15	9
Sign Control	Free			Free	Free	

Intersection Summary			
Area Type:	Other		
Control Type: Unsignalized			
Intersection Capacity Utilization 25.9%		ICU Level of Service A	
Analysis Period (min) 15			

DocuSign Envelope ID: 5C03745C-4B01-4834-A65D-B77F558A4F46



Lane Group	NBT	NBR	SBL	SBT	NWL	NWR
Lane Configurations						
Traffic Volume (vph)	0	0	1	506	0	0
Future Volume (vph)	0	0	1	506	0	0
Ideal Flow (vphpl)	1900	1900	1900	1900	1900	1900
Lane Util. Factor	1.00	1.00	1.00	1.00	1.00	1.00
Frt						
Flt Protected						
Satd. Flow (prot)	0	0	0	1863	0	0
Flt Permitted						
Satd. Flow (perm)	0	0	0	1863	0	0
Link Speed (mph)	35			35	35	
Link Distance (ft)	307			1240	313	
Travel Time (s)	6.0			24.2	6.1	
Peak Hour Factor	0.90	0.90	0.90	0.90	0.90	0.90
Adj. Flow (vph)	0	0	1	562	0	0
Shared Lane Traffic (%)						
Lane Group Flow (vph)	0	0	0	563	0	0
Enter Blocked Intersection	No	No	No	No	No	No
Lane Alignment	Left	Right	Left	Left	Left	Right
Median Width(ft)	0			0	0	
Link Offset(ft)	0			0	0	
Crosswalk Width(ft)	16			16	16	
Two way Left Turn Lane						
Headway Factor	1.00	1.00	1.00	1.00	1.00	1.00
Turning Speed (mph)		9	15		15	9
Sign Control	Stop			Free	Stop	

Intersection Summary			
Area Type:	Other		
Control Type: Unsignalized			
Intersection Capacity Utilization 30.0%		ICU Level of Service A	
Analysis Period (min) 15			

DocuSign Envelope ID: 5C03745C-4B01-4834-A65D-B77F558A4F46

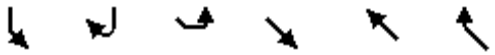

Lane Group	SBL	SBR	SEL	SET	NWT	NWR
Lane Configurations						
Traffic Volume (vph)	1	0	0	302	0	0
Future Volume (vph)	1	0	0	302	0	0
Ideal Flow (vphpl)	1900	1900	1900	1900	1900	1900
Lane Util. Factor	1.00	1.00	1.00	1.00	1.00	1.00
Frt						
Flt Protected	0.950					
Satd. Flow (prot)	1612	0	0	1696	0	0
Flt Permitted	0.950					
Satd. Flow (perm)	1612	0	0	1696	0	0
Link Speed (mph)	35			35	35	
Link Distance (ft)	150			290	741	
Travel Time (s)	2.9			5.6	14.4	
Peak Hour Factor	0.90	0.90	0.90	0.90	0.90	0.90
Heavy Vehicles (%)	12%	2%	2%	12%	2%	2%
Adj. Flow (vph)	1	0	0	336	0	0
Shared Lane Traffic (%)						
Lane Group Flow (vph)	1	0	0	336	0	0
Enter Blocked Intersection	No	No	No	No	No	No
Lane Alignment	Left	Right	Left	Left	Left	Right
Median Width(ft)	12			0	0	
Link Offset(ft)	0			0	0	
Crosswalk Width(ft)	16			16	16	
Two way Left Turn Lane						
Headway Factor	1.00	1.00	1.00	1.00	1.00	1.00
Turning Speed (mph)	15	9	15			9
Sign Control	Yield			Free	Stop	

Intersection Summary			
Area Type:	Other		
Control Type: Unsignalized			
Intersection Capacity Utilization 25.9%		ICU Level of Service A	
Analysis Period (min) 15			

DocuSign Envelope ID: 5C03745C-4B01-4834-A65D-B77F558A4F46

APPENDIX O

2045 Build DDI (Unsignalized EB Off-Ramp Terminal) PM Synchro Report

DocuSign Envelope ID: 5C03745C-4B01-4834-A65D-B77F558A4F46

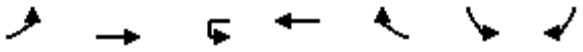

Lane Group	EBL	EBT	WBU	WBT	WBR	SBL	SBR
Lane Configurations							
Traffic Volume (vph)	94	1464	0	1180	106	106	76
Future Volume (vph)	94	1464	0	1180	106	106	76
Ideal Flow (vphpl)	1900	1900	1900	1900	1900	1900	1900
Storage Length (ft)	150		150		175	0	175
Storage Lanes	1		1		1	1	1
Taper Length (ft)	25		25			25	
Lane Util. Factor	1.00	0.95	1.00	0.95	1.00	1.00	1.00
Frt					0.850		0.850
Flt Protected	0.950					0.950	
Satd. Flow (prot)	1703	3406	1792	3406	1524	1703	1524
Flt Permitted	0.950					0.950	
Satd. Flow (perm)	1703	3406	1792	3406	1524	1703	1524
Right Turn on Red					No		No
Satd. Flow (RTOR)							
Link Speed (mph)		45		45		25	
Link Distance (ft)		1606		558		1108	
Travel Time (s)		24.3		8.5		30.2	
Peak Hour Factor	0.90	0.90	0.90	0.90	0.90	0.90	0.90
Heavy Vehicles (%)	6%	6%	6%	6%	6%	6%	6%
Adj. Flow (vph)	104	1627	0	1311	118	118	84
Shared Lane Traffic (%)							
Lane Group Flow (vph)	104	1627	0	1311	118	118	84
Enter Blocked Intersection	No	No	No	No	No	No	No
Lane Alignment	Left	Left	R NA	Left	Right	Left	Right
Median Width(ft)		12		12		12	
Link Offset(ft)		0		0		0	
Crosswalk Width(ft)		16		16		16	
Two way Left Turn Lane							
Headway Factor	1.00	1.00	1.00	1.00	1.00	1.00	1.00
Turning Speed (mph)	15		9		9	15	9
Number of Detectors	1	2	1	2	1	1	1
Detector Template	Left	Thru	Left	Thru	Right	Left	Right
Leading Detector (ft)	20	100	20	100	20	20	20
Trailing Detector (ft)	0	0	0	0	0	0	0
Detector 1 Position(ft)	0	0	0	0	0	0	0
Detector 1 Size(ft)	20	6	20	6	20	20	20
Detector 1 Type	Cl+Ex	Cl+Ex	Cl+Ex	Cl+Ex	Cl+Ex	Cl+Ex	Cl+Ex
Detector 1 Channel							
Detector 1 Extend (s)	0.0	0.0	0.0	0.0	0.0	0.0	0.0
Detector 1 Queue (s)	0.0	0.0	0.0	0.0	0.0	0.0	0.0
Detector 1 Delay (s)	0.0	0.0	0.0	0.0	0.0	0.0	0.0
Detector 2 Position(ft)		94		94			
Detector 2 Size(ft)		6		6			
Detector 2 Type		Cl+Ex		Cl+Ex			
Detector 2 Channel							
Detector 2 Extend (s)		0.0		0.0			
Turn Type	Prot	NA	Prot	NA	pm+ov	Prot	pm+ov
Protected Phases	5	2	1	6	4	4	5

DocuSign Envelope ID: 5C03745C-4B01-4834-A65D-B77F558A4F46

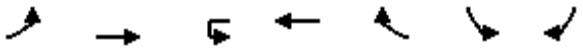

Lane Group	EBL	EBT	WBU	WBT	WBR	SBL	SBR
Permitted Phases					6		4
Detector Phase	5	2	1	6	4	4	5
Switch Phase							
Minimum Initial (s)	7.0	12.0	7.0	12.0	7.0	7.0	7.0
Minimum Split (s)	13.1	18.8	11.9	35.8	36.5	36.5	13.1
Total Split (s)	17.0	71.0	12.0	66.0	37.0	37.0	17.0
Total Split (%)	14.2%	59.2%	10.0%	55.0%	30.8%	30.8%	14.2%
Maximum Green (s)	10.9	64.2	7.1	59.2	30.5	30.5	10.9
Yellow Time (s)	3.0	4.9	3.0	4.9	3.0	3.0	3.0
All-Red Time (s)	3.1	1.9	1.9	1.9	3.5	3.5	3.1
Lost Time Adjust (s)	-1.1	-1.8	0.1	-1.8	-1.8	-1.5	-1.1
Total Lost Time (s)	5.0	5.0	5.0	5.0	4.7	5.0	5.0
Lead/Lag	Lag	Lag	Lead	Lead			Lag
Lead-Lag Optimize?	Yes	Yes	Yes	Yes			Yes
Vehicle Extension (s)	2.0	6.0	2.0	6.0	2.0	2.0	2.0
Minimum Gap (s)	0.2	3.0	0.2	3.0	0.2	0.2	0.2
Time Before Reduce (s)	0.0	15.0	0.0	15.0	0.0	0.0	0.0
Time To Reduce (s)	0.0	30.0	0.0	30.0	0.0	0.0	0.0
Recall Mode	None	C-Max	None	C-Max	None	None	None
Walk Time (s)				7.0	7.0	7.0	
Flash Dont Walk (s)				22.0	23.0	23.0	
Pedestrian Calls (#/hr)				0	0	0	
Act Effct Green (s)	12.0	95.8		78.8	98.3	14.2	31.2
Actuated g/C Ratio	0.10	0.80		0.66	0.82	0.12	0.26
v/c Ratio	0.61	0.60		0.59	0.09	0.59	0.21
Control Delay	67.9	6.2		10.4	1.3	61.2	35.0
Queue Delay	0.0	0.1		0.2	0.0	0.0	0.0
Total Delay	67.9	6.3		10.6	1.3	61.2	35.0
LOS	E	A		B	A	E	D
Approach Delay		10.0		9.9		50.3	
Approach LOS		B		A		D	
Queue Length 50th (ft)	78	207		265	8	88	51
Queue Length 95th (ft)	#146	326		307	m12	144	90
Internal Link Dist (ft)		1526		478		1028	
Turn Bay Length (ft)	150				175		175
Base Capacity (vph)	170	2718		2236	1248	454	396
Starvation Cap Reductn	0	0		271	0	0	0
Spillback Cap Reductn	0	244		0	0	0	0
Storage Cap Reductn	0	0		0	0	0	0
Reduced v/c Ratio	0.61	0.66		0.67	0.09	0.26	0.21

Intersection Summary	
Area Type:	Other
Cycle Length: 120	
Actuated Cycle Length: 120	
Offset: 111 (93%), Referenced to phase 2:EBT and 6:WBT, Start of Green	
Natural Cycle: 100	
Control Type: Actuated-Coordinated	
Maximum v/c Ratio: 0.61	

DocuSign Envelope ID: 5C03745C-4B01-4834-A65D-B77F558A4F46

Intersection Signal Delay: 12.4	Intersection LOS: B
Intersection Capacity Utilization 64.7%	ICU Level of Service C
Analysis Period (min) 15	

\# 95th percentile volume exceeds capacity, queue may be longer.
Queue shown is maximum after two cycles.
m Volume for 95th percentile queue is metered by upstream signal.

Splits and Phases: 1: NC 191 (Brevard Rd) & Commercial Access

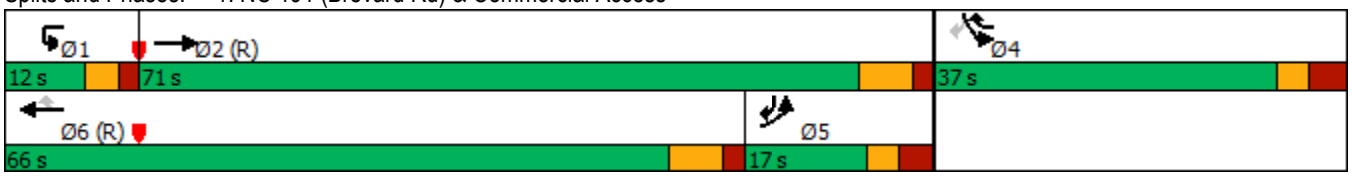

DocuSign Envelope ID: 5C03745C-4B01-4834-A65D-B77F558A4F46

Lane Group	EBT	EBR	WBL	WBT	NBL	NBR
Lane Configurations						
Traffic Volume (vph)	1329	241	321	973	313	66
Future Volume (vph)	1329	241	321	973	313	66
Ideal Flow (vphpl)	1900	1900	1900	1900	1900	1900
Grade (%)	-1%			-1%	0%	
Storage Length (ft)		225	200		0	0
Storage Lanes		1	1		2	1
Taper Length (ft)			25		25	
Lane Util. Factor	0.95	1.00	1.00	0.95	0.97	1.00
Frt		0.850				0.850
Flt Protected			0.950		0.950	
Satd. Flow (prot)	3423	1449	1620	3423	3303	1524
Flt Permitted			0.950		0.950	
Satd. Flow (perm)	3423	1449	1620	3423	3303	1524
Right Turn on Red		No				Yes
Satd. Flow (RTOR)						16
Link Speed (mph)	45			45	45	
Link Distance (ft)	558			1204	323	
Travel Time (s)	8.5			18.2	4.9	
Peak Hour Factor	0.90	0.90	0.90	0.90	0.90	0.90
Heavy Vehicles (%)	6%	12%	12%	6%	6%	6%
Adj. Flow (vph)	1477	268	357	1081	348	73
Shared Lane Traffic (%)						
Lane Group Flow (vph)	1477	268	357	1081	348	73
Enter Blocked Intersection	No	No	No	No	No	No
Lane Alignment	Left	Right	Left	Left	Left	Right
Median Width(ft)	12			12	40	
Link Offset(ft)	0			0	0	
Crosswalk Width(ft)	16			16	16	
Two way Left Turn Lane						
Headway Factor	0.99	0.99	0.99	0.99	1.00	1.00
Turning Speed (mph)		9	15		15	9
Number of Detectors	2	1	1	2	1	1
Detector Template	Thru	Right	Left	Thru	Left	Right
Leading Detector (ft)	100	20	20	100	20	20
Trailing Detector (ft)	0	0	0	0	0	0
Detector 1 Position(ft)	0	0	0	0	0	0
Detector 1 Size(ft)	6	20	20	6	20	20
Detector 1 Type	Cl+Ex	Cl+Ex	Cl+Ex	Cl+Ex	Cl+Ex	Cl+Ex
Detector 1 Channel						
Detector 1 Extend (s)	0.0	0.0	0.0	0.0	0.0	0.0
Detector 1 Queue (s)	0.0	0.0	0.0	0.0	0.0	0.0
Detector 1 Delay (s)	0.0	0.0	0.0	0.0	0.0	0.0
Detector 2 Position(ft)	94			94		
Detector 2 Size(ft)	6			6		
Detector 2 Type	Cl+Ex			Cl+Ex		
Detector 2 Channel						
Detector 2 Extend (s)	0.0			0.0		
Turn Type	NA	pm+ov	Prot	NA	Prot	pm+ov

DocuSign Envelope ID: 5C03745C-4B01-4834-A65D-B77F558A4F46



Lane Group	EBT	EBR	WBL	WBT	NBL	NBR
Protected Phases	2	4	1	6	4	1
Permitted Phases		2				4
Detector Phase	2	4	1	6	4	1
Switch Phase						
Minimum Initial (s)	12.0	7.0	10.0	12.0	7.0	10.0
Minimum Split (s)	18.0	13.9	16.3	18.6	13.9	16.3
Total Split (s)	62.0	21.0	37.0	99.0	21.0	37.0
Total Split (%)	51.7%	17.5%	30.8%	82.5%	17.5%	30.8%
Maximum Green (s)	56.0	14.1	30.7	92.4	14.1	30.7
Yellow Time (s)	4.4	3.0	3.0	4.7	3.0	3.0
All-Red Time (s)	1.6	3.9	3.3	1.9	3.9	3.3
Lost Time Adjust (s)	-1.0	-1.9	-1.3	-1.6	-1.9	-1.9
Total Lost Time (s)	5.0	5.0	5.0	5.0	5.0	4.4
Lead/Lag	Lead		Lag			Lag
Lead-Lag Optimize?	Yes		Yes			Yes
Vehicle Extension (s)	6.0	5.0	2.5	6.0	5.0	2.5
Minimum Gap (s)	3.0	0.2	0.2	3.0	0.2	0.2
Time Before Reduce (s)	15.0	0.0	0.0	15.0	0.0	0.0
Time To Reduce (s)	30.0	0.0	0.0	30.0	0.0	0.0
Recall Mode	C-Max	None	None	C-Max	None	None
Act Effct Green (s)	57.0	78.0	32.0	94.0	16.0	53.6
Actuated g/C Ratio	0.48	0.65	0.27	0.78	0.13	0.45
v/c Ratio	0.91	0.28	0.83	0.40	0.79	0.11
Control Delay	32.5	9.1	35.7	3.7	64.3	15.7
Queue Delay	2.5	0.0	0.0	0.0	0.0	0.0
Total Delay	35.0	9.1	35.7	3.7	64.3	15.7
LOS	C	A	D	A	E	B
Approach Delay	31.0			11.6	55.9	
Approach LOS	C			B	E	
Queue Length 50th (ft)	554	76	272	78	136	25
Queue Length 95th (ft)	#516	115	#425	90	#202	54
Internal Link Dist (ft)	478			1124	243	
Turn Bay Length (ft)		225	200			
Base Capacity (vph)	1625	941	432	2681	440	689
Starvation Cap Reductn	75	0	0	0	0	0
Spillback Cap Reductn	0	0	0	0	0	0
Storage Cap Reductn	0	0	0	0	0	0
Reduced v/c Ratio	0.95	0.28	0.83	0.40	0.79	0.11

Intersection Summary			
Area Type:	Other		
Cycle Length: 120			
Actuated Cycle Length: 120			
Offset: 77 (64%), Referenced to phase 2:EBT and 6:WBT, Start of Green			
Natural Cycle: 90			
Control Type: Actuated-Coordinated			
Maximum v/c Ratio: 0.91			
Intersection Signal Delay: 26.2		Intersection LOS: C	
Intersection Capacity Utilization 76.0%		ICU Level of Service D	

DocuSign Envelope ID: 5C03745C-4B01-4834-A65D-B77F558A4F46

Analysis Period (min) 15

\# 95th percentile volume exceeds capacity, queue may be longer.

Queue shown is maximum after two cycles.

Splits and Phases: 2: I-26 SEB Ramps & NC 191 (Brevard Rd)

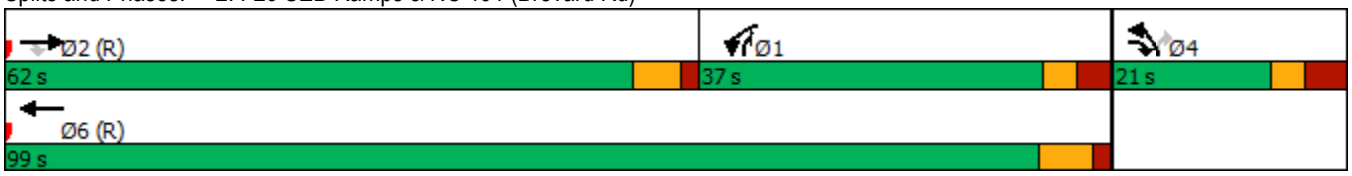

DocuSign Envelope ID: 5C03745C-4B01-4834-A65D-B77F558A4F46

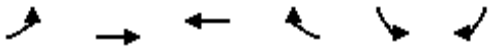

Lane Group	EBL	EBT	WBT	WBR	SBL	SBR
Lane Configurations						
Traffic Volume (vph)	336	1059	1092	55	345	202
Future Volume (vph)	336	1059	1092	55	345	202
Ideal Flow (vphpl)	1900	1900	1900	1900	1900	1900
Grade (%)		2%	-2%		2%	
Storage Length (ft)	625			200	0	400
Storage Lanes	2			1	2	1
Taper Length (ft)	25				25	
Lane Util. Factor	0.97	0.95	0.95	1.00	0.97	1.00
Frt				0.850		0.850
Flt Protected	0.950				0.950	
Satd. Flow (prot)	3095	3340	3408	1456	3240	1494
Flt Permitted	0.950				0.950	
Satd. Flow (perm)	3095	3340	3408	1456	3240	1494
Right Turn on Red				No		No
Satd. Flow (RTOR)						
Link Speed (mph)		45	45		45	
Link Distance (ft)		802	1565		860	
Travel Time (s)		12.2	23.7		13.0	
Peak Hour Factor	0.90	0.90	0.90	0.90	0.90	0.90
Heavy Vehicles (%)	12%	7%	7%	12%	7%	7%
Adj. Flow (vph)	373	1177	1213	61	383	224
Shared Lane Traffic (%)						
Lane Group Flow (vph)	373	1177	1213	61	383	224
Enter Blocked Intersection	No	No	No	No	No	No
Lane Alignment	Left	Left	Left	Right	Left	Right
Median Width(ft)		24	12		36	
Link Offset(ft)		0	0		0	
Crosswalk Width(ft)		16	16		16	
Two way Left Turn Lane						
Headway Factor	1.01	1.01	0.99	0.99	1.01	1.01
Turning Speed (mph)	15			9	15	9
Number of Detectors	1	2	2	1	1	1
Detector Template	Left	Thru	Thru	Right	Left	Right
Leading Detector (ft)	20	100	100	20	20	20
Trailing Detector (ft)	0	0	0	0	0	0
Detector 1 Position(ft)	0	0	0	0	0	0
Detector 1 Size(ft)	20	6	6	20	20	20
Detector 1 Type	Cl+Ex	Cl+Ex	Cl+Ex	Cl+Ex	Cl+Ex	Cl+Ex
Detector 1 Channel						
Detector 1 Extend (s)	0.0	0.0	0.0	0.0	0.0	0.0
Detector 1 Queue (s)	0.0	0.0	0.0	0.0	0.0	0.0
Detector 1 Delay (s)	0.0	0.0	0.0	0.0	0.0	0.0
Detector 2 Position(ft)		94	94			
Detector 2 Size(ft)		6	6			
Detector 2 Type		Cl+Ex	Cl+Ex			
Detector 2 Channel						
Detector 2 Extend (s)		0.0	0.0			
Turn Type	Prot	NA	NA	pm+ov	Prot	pm+ov

DocuSign Envelope ID: 5C03745C-4B01-4834-A65D-B77F558A4F46

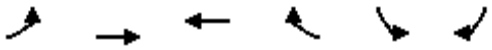

Lane Group	EBL	EBT	WBT	WBR	SBL	SBR
Protected Phases	5	2	6	4	4	5
Permitted Phases				6		4
Detector Phase	5	2	6	4	4	5
Switch Phase						
Minimum Initial (s)	7.0	12.0	12.0	7.0	7.0	7.0
Minimum Split (s)	14.0	19.0	25.0	25.0	25.0	14.0
Total Split (s)	28.0	93.0	65.0	27.0	27.0	28.0
Total Split (%)	23.3%	77.5%	54.2%	22.5%	22.5%	23.3%
Maximum Green (s)	21.0	86.0	58.0	20.0	20.0	21.0
Yellow Time (s)	5.0	5.0	5.0	5.0	5.0	5.0
All-Red Time (s)	2.0	2.0	2.0	2.0	2.0	2.0
Lost Time Adjust (s)	-2.0	-2.0	-2.0	-2.0	-2.0	-2.0
Total Lost Time (s)	5.0	5.0	5.0	5.0	5.0	5.0
Lead/Lag	Lag		Lead			Lag
Lead-Lag Optimize?	Yes		Yes			Yes
Vehicle Extension (s)	3.0	3.0	3.0	3.0	3.0	3.0
Minimum Gap (s)	0.2	3.0	3.0	0.2	0.2	0.2
Time Before Reduce (s)	0.0	15.0	15.0	0.0	0.0	0.0
Time To Reduce (s)	0.0	30.0	30.0	0.0	0.0	0.0
Recall Mode	None	C-Max	C-Max	None	None	None
Walk Time (s)			7.0	7.0	7.0	
Flash Dont Walk (s)			11.0	11.0	11.0	
Pedestrian Calls (#/hr)			0	0	0	
Act Effct Green (s)	23.0	89.8	61.8	87.0	20.2	48.2
Actuated g/C Ratio	0.19	0.75	0.52	0.72	0.17	0.40
v/c Ratio	0.63	0.47	0.69	0.06	0.70	0.37
Control Delay	18.2	1.1	24.9	4.9	54.4	27.1
Queue Delay	0.0	0.0	0.0	0.0	0.0	0.0
Total Delay	18.2	1.1	24.9	4.9	54.4	27.1
LOS	B	A	C	A	D	C
Approach Delay		5.2	23.9		44.3	
Approach LOS		A	C		D	
Queue Length 50th (ft)	122	20	366	12	144	118
Queue Length 95th (ft)	m123	m24	454	24	196	183
Internal Link Dist (ft)		722	1485		780	
Turn Bay Length (ft)	625			200		400
Base Capacity (vph)	593	2499	1755	1039	594	599
Starvation Cap Reductn	0	0	0	0	0	0
Spillback Cap Reductn	0	0	0	0	0	0
Storage Cap Reductn	0	0	0	0	0	0
Reduced v/c Ratio	0.63	0.47	0.69	0.06	0.64	0.37

Intersection Summary	
Area Type:	Other
Cycle Length: 120	
Actuated Cycle Length: 120	
Offset: 77 (64%), Referenced to phase 2:EBT and 6:WBT, Start of Green	
Natural Cycle: 75	
Control Type: Actuated-Coordinated	

DocuSign Envelope ID: 5C03745C-4B01-4834-A65D-B77F558A4F46

Maximum v/c Ratio: 0.70	
Intersection Signal Delay: 19.1	Intersection LOS: B
Intersection Capacity Utilization 62.1%	ICU Level of Service B
Analysis Period (min) 15	

m Volume for 95th percentile queue is metered by upstream signal.

Splits and Phases: 3: NC 191 (Brevard Rd) & I-26 NWB Ramps

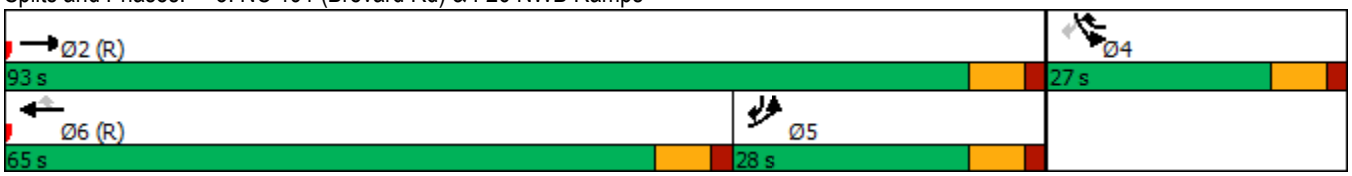

DocuSign Envelope ID: 5C03745C-4B01-4834-A65D-B77F558A4F46

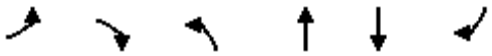

Lane Group	EBL	EBR	NBL	NBT	SBT	SBR
Lane Configurations						
Traffic Volume (vph)	94	17	14	247	193	56
Future Volume (vph)	94	17	14	247	193	56
Ideal Flow (vphpl)	1900	1900	1900	1900	1900	1900
Grade (%)	0%			0%	3%	
Storage Length (ft)	75	0	275			0
Storage Lanes	1	1	1			0
Taper Length (ft)	25		25			
Lane Util. Factor	1.00	1.00	1.00	1.00	1.00	1.00
Ped Bike Factor						
Frt		0.850			0.970	
Flt Protected	0.950		0.950			
Satd. Flow (prot)	1770	1583	1770	1863	1780	0
Flt Permitted	0.950		0.950			
Satd. Flow (perm)	1770	1583	1770	1863	1780	0
Link Speed (mph)	20			35	35	
Link Distance (ft)	1081			1059	248	
Travel Time (s)	36.9			20.6	4.8	
Confl. Bikes (#/hr)						159
Peak Hour Factor	0.90	0.90	0.90	0.90	0.90	0.90
Adj. Flow (vph)	104	19	16	274	214	62
Shared Lane Traffic (%)						
Lane Group Flow (vph)	104	19	16	274	276	0
Enter Blocked Intersection	No	No	No	No	No	No
Lane Alignment	Left	Right	Left	Left	Left	Right
Median Width(ft)	12			12	0	
Link Offset(ft)	0			0	0	
Crosswalk Width(ft)	16			16	16	
Two way Left Turn Lane						
Headway Factor	1.00	1.00	1.00	1.00	1.02	1.02
Turning Speed (mph)	15	9	15			9
Sign Control	Stop			Free	Free	

Intersection Summary			
Area Type:	Other		
Control Type: Unsignalized			
Intersection Capacity Utilization 25.4%		ICU Level of Service A	
Analysis Period (min) 15			

DocuSign Envelope ID: 5C03745C-4B01-4834-A65D-B77F558A4F46

Lane Group	EBL	EBT	EBR	WBL	WBT	WBR	NBL	NBT	NBR	SBL	SBT	SBR
Lane Configurations												
Traffic Volume (vph)	111	152	78	111	135	442	56	952	89	260	697	58
Future Volume (vph)	111	152	78	111	135	442	56	952	89	260	697	58
Ideal Flow (vphpl)	1900	1900	1900	1900	1900	1900	1900	1900	1900	1900	1900	1900
Grade (%)		3%			0%			2%			-7%	
Storage Length (ft)	0		0	200		0	175		150	200		0
Storage Lanes	1		0	1		1	1		1	2		0
Taper Length (ft)	25			25			25			25		
Lane Util. Factor	1.00	0.95	0.95	1.00	1.00	1.00	1.00	0.95	1.00	0.97	0.95	0.95
Frt		0.949				0.850			0.850		0.989	
Flt Protected	0.950			0.950			0.950			0.950		
Satd. Flow (prot)	1743	3308	0	1719	1810	1538	1686	3372	1508	3452	3519	0
Flt Permitted	0.950			0.950			0.950			0.950		
Satd. Flow (perm)	1743	3308	0	1719	1810	1538	1686	3372	1508	3452	3519	0
Right Turn on Red			No			No			No			No
Satd. Flow (RTOR)												
Link Speed (mph)		35			35			45			45	
Link Distance (ft)		248			1390			1589			1600	
Travel Time (s)		4.8			27.1			24.1			24.2	
Peak Hour Factor	0.90	0.90	0.90	0.90	0.90	0.90	0.90	0.90	0.90	0.90	0.90	0.90
Heavy Vehicles (%)	2%	2%	2%	5%	5%	5%	6%	6%	6%	5%	5%	5%
Adj. Flow (vph)	123	169	87	123	150	491	62	1058	99	289	774	64
Shared Lane Traffic (%)												
Lane Group Flow (vph)	123	256	0	123	150	491	62	1058	99	289	838	0
Enter Blocked Intersection	No	No	No	No	No	No	No	No	No	No	No	No
Lane Alignment	L NA	Left	Right	Left	Left	Left	Left	L NA	Right	Left	Left	Right
Median Width(ft)		12			12			24			24	
Link Offset(ft)		0			0			0			0	
Crosswalk Width(ft)		16			16			16			16	
Two way Left Turn Lane												
Headway Factor	1.02	1.02	1.02	1.00	1.00	1.00	1.01	1.01	1.01	0.96	0.96	0.96
Turning Speed (mph)	15		9	15		9	15		9	15		9
Number of Detectors	1	2		1	2	1	1	2	1	1	2	
Detector Template	Left	Thru		Left	Thru	Right	Left	Thru	Right	Left	Thru	
Leading Detector (ft)	20	100		20	100	20	20	100	20	20	100	
Trailing Detector (ft)	0	0		0	0	0	0	0	0	0	0	
Detector 1 Position(ft)	0	0		0	0	0	0	0	0	0	0	
Detector 1 Size(ft)	20	6		20	6	20	20	6	20	20	6	
Detector 1 Type	Cl+Ex	Cl+Ex		Cl+Ex	Cl+Ex	Cl+Ex	Cl+Ex	Cl+Ex	Cl+Ex	Cl+Ex	Cl+Ex	
Detector 1 Channel												
Detector 1 Extend (s)	0.0	0.0		0.0	0.0	0.0	0.0	0.0	0.0	0.0	0.0	
Detector 1 Queue (s)	0.0	0.0		0.0	0.0	0.0	0.0	0.0	0.0	0.0	0.0	
Detector 1 Delay (s)	0.0	0.0		0.0	0.0	0.0	0.0	0.0	0.0	0.0	0.0	
Detector 2 Position(ft)		94			94			94			94	
Detector 2 Size(ft)		6			6			6			6	
Detector 2 Type		Cl+Ex			Cl+Ex			Cl+Ex			Cl+Ex	
Detector 2 Channel												
Detector 2 Extend (s)		0.0			0.0			0.0			0.0	
Turn Type	Prot	NA		Prot	NA	pm+ov	Prot	NA	pm+ov	Prot	NA	

DocuSign Envelope ID: 5C03745C-4B01-4834-A65D-B77F558A4F46

Lane Group	EBL	EBT	EBR	WBL	WBT	WBR	NBL	NBT	NBR	SBL	SBT	SBR
Protected Phases	7	4		3	8	1	5	2	3	1	6	
Permitted Phases						8			2			
Detector Phase	7	4		3	8	1	5	2	3	1	6	
Switch Phase												
Minimum Initial (s)	7.0	7.0		7.0	7.0	7.0	7.0	12.0	7.0	7.0	12.0	
Minimum Split (s)	14.0	14.0		14.0	14.0	14.0	14.0	19.0	14.0	14.0	19.0	
Total Split (s)	17.0	18.0		17.0	18.0	34.0	15.0	51.0	17.0	34.0	70.0	
Total Split (%)	14.2%	15.0%		14.2%	15.0%	28.3%	12.5%	42.5%	14.2%	28.3%	58.3%	
Maximum Green (s)	10.0	11.0		10.0	11.0	27.0	8.0	44.0	10.0	27.0	63.0	
Yellow Time (s)	5.0	5.0		5.0	5.0	5.0	5.0	5.0	5.0	5.0	5.0	
All-Red Time (s)	2.0	2.0		2.0	2.0	2.0	2.0	2.0	2.0	2.0	2.0	
Lost Time Adjust (s)	-2.0	-2.0		-2.0	-2.0	-2.0	-2.0	-2.0	-2.0	-2.0	-2.0	
Total Lost Time (s)	5.0	5.0		5.0	5.0	5.0	5.0	5.0	5.0	5.0	5.0	
Lead/Lag	Lead	Lag		Lead	Lag	Lead	Lead	Lag	Lead	Lead	Lag	
Lead-Lag Optimize?	Yes	Yes		Yes	Yes	Yes	Yes	Yes	Yes	Yes	Yes	
Vehicle Extension (s)	3.0	3.0		3.0	3.0	3.0	3.0	3.0	3.0	3.0	3.0	
Minimum Gap (s)	3.0	3.0		3.0	3.0	3.0	3.0	3.0	3.0	3.0	3.0	
Time Before Reduce (s)	0.0	0.0		0.0	0.0	0.0	0.0	15.0	0.0	0.0	15.0	
Time To Reduce (s)	0.0	0.0		0.0	0.0	0.0	0.0	30.0	0.0	0.0	30.0	
Recall Mode	None	None		None	None	None	None	Min	None	None	Min	
Act Effct Green (s)	11.7	12.8		11.8	12.8	43.3	9.9	41.9	58.7	25.3	60.9	
Actuated g/C Ratio	0.10	0.11		0.11	0.11	0.39	0.09	0.37	0.52	0.23	0.54	
v/c Ratio	0.68	0.68		0.68	0.72	0.83	0.42	0.84	0.13	0.37	0.44	
Control Delay	70.0	59.3		70.9	70.7	45.2	61.1	39.6	14.8	38.6	16.8	
Queue Delay	0.0	0.0		0.0	0.0	0.0	0.0	0.0	0.0	0.0	0.0	
Total Delay	70.0	59.3		70.9	70.7	45.2	61.1	39.6	14.8	38.6	16.8	
LOS	E	E		E	E	D	E	D	B	D	B	
Approach Delay		62.8			54.3			38.7			22.4	
Approach LOS		E			D			D			C	
Queue Length 50th (ft)	94	102		94	115	336	46	383	38	95	197	
Queue Length 95th (ft)	#184	#150		#186	#219	#517	93	473	68	137	246	
Internal Link Dist (ft)		168			1310			1509			1520	
Turn Bay Length (ft)				200			175		150	200		
Base Capacity (vph)	189	388		186	213	649	152	1402	795	905	2068	
Starvation Cap Reductn	0	0		0	0	0	0	0	0	0	0	
Spillback Cap Reductn	0	0		0	0	0	0	0	0	0	0	
Storage Cap Reductn	0	0		0	0	0	0	0	0	0	0	
Reduced v/c Ratio	0.65	0.66		0.66	0.70	0.76	0.41	0.75	0.12	0.32	0.41	

Intersection Summary			
Area Type:	Other		
Cycle Length: 120			
Actuated Cycle Length: 112.1			
Natural Cycle: 80			
Control Type: Actuated-Uncoordinated			
Maximum v/c Ratio: 0.84			
Intersection Signal Delay: 39.4		Intersection LOS: D	
Intersection Capacity Utilization 72.3%		ICU Level of Service C	
Analysis Period (min) 15			

DocuSign Envelope ID: 5C03745C-4B01-4834-A65D-B77F558A4F46

95th percentile volume exceeds capacity, queue may be longer.
Queue shown is maximum after two cycles.

Splits and Phases: 5: NC 191 (Brevard Rd) & Blue Ridge Pkwy Access/NC 191 Connector

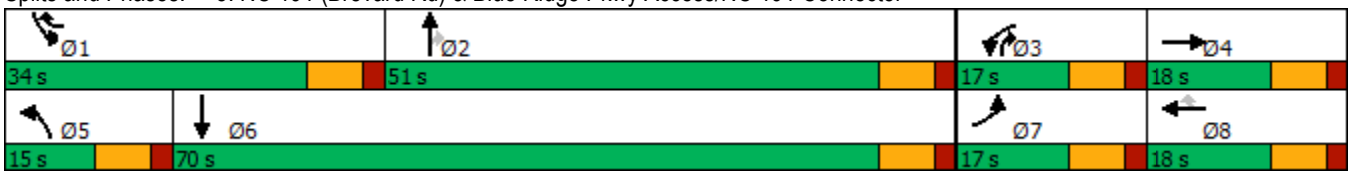

DocuSign Envelope ID: 5C03745C-4B01-4834-A65D-B77F558A4F46



Lane Group	EBL	EBT	EBR	WBL	WBT	WBR	SBL	SBR	NWL	NWR
Lane Configurations										
Traffic Volume (vph)	0	0	958	0	360	0	0	435	0	0
Future Volume (vph)	0	0	958	0	360	0	0	435	0	0
Ideal Flow (vphpl)	1900	1900	1900	1900	1900	1900	1900	1900	1900	1900
Lane Util. Factor	1.00	1.00	*0.95	1.00	1.00	1.00	1.00	1.00	1.00	1.00
Frt								0.865		
Flt Protected										
Satd. Flow (prot)	0	0	3438	0	1810	0	0	1565	0	0
Flt Permitted										
Satd. Flow (perm)	0	0	3438	0	1810	0	0	1565	0	0
Link Speed (mph)		35			35		35		35	
Link Distance (ft)		177			206		307		102	
Travel Time (s)		3.4			4.0		6.0		2.0	
Peak Hour Factor	0.90	0.90	0.90	0.90	0.90	0.90	0.90	0.90	0.90	0.90
Heavy Vehicles (%)	2%	2%	5%	2%	5%	2%	2%	5%	2%	2%
Adj. Flow (vph)	0	0	1064	0	400	0	0	483	0	0
Shared Lane Traffic (%)										
Lane Group Flow (vph)	0	0	1064	0	400	0	0	483	0	0
Enter Blocked Intersection	No	No	No	No	No	No	No	No	No	No
Lane Alignment	Left	Left	Right	Left	L NA	Right	Left	R NA	Left	Right
Median Width(ft)		0			0		0		0	
Link Offset(ft)		0			0		0		0	
Crosswalk Width(ft)		16			16		16		16	
Two way Left Turn Lane										
Headway Factor	1.00	1.00	1.00	1.00	1.00	1.00	1.00	1.00	1.00	1.00
Turning Speed (mph)	15		35	15		9	15	9	15	9
Sign Control		Free			Free		Free		Free	

Intersection Summary			
Area Type:	Other		
Control Type: Unsignalized			
Intersection Capacity Utilization 52.5%		ICU Level of Service A	
Analysis Period (min) 15			

* User Entered Value

DocuSign Envelope ID: 5C03745C-4B01-4834-A65D-B77F558A4F46

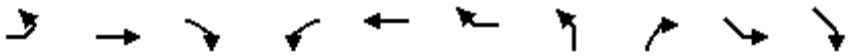

Lane Group	EBL	EBT	EBR	WBL	WBT	WBR	NBL	NBR	SEL	SER
Lane Configurations										
Traffic Volume (vph)	0	499	0	0	0	0	360	0	0	0
Future Volume (vph)	0	499	0	0	0	0	360	0	0	0
Ideal Flow (vphpl)	1900	1900	1900	1900	1900	1900	1900	1900	1900	1900
Lane Util. Factor	1.00	1.00	1.00	1.00	1.00	1.00	1.00	1.00	1.00	1.00
Frt										
Flt Protected										
Satd. Flow (prot)	0	1810	0	0	0	0	1810	0	0	0
Flt Permitted										
Satd. Flow (perm)	0	1810	0	0	0	0	1810	0	0	0
Right Turn on Red	No		No			No		No		
Satd. Flow (RTOR)										
Link Speed (mph)		35			35		35		35	
Link Distance (ft)		114			195		160		206	
Travel Time (s)		2.2			3.8		3.1		4.0	
Peak Hour Factor	0.90	0.90	0.90	0.90	0.90	0.90	0.90	0.90	0.90	0.90
Heavy Vehicles (%)	2%	5%	2%	2%	2%	2%	5%	2%	2%	2%
Adj. Flow (vph)	0	554	0	0	0	0	400	0	0	0
Shared Lane Traffic (%)										
Lane Group Flow (vph)	0	554	0	0	0	0	400	0	0	0
Enter Blocked Intersection	No	No	No	No	No	No	No	No	No	No
Lane Alignment	Left	Left	Right	Left	Left	Right	Left	Right	Left	Right
Median Width(ft)		0			0		12		0	
Link Offset(ft)		0			0		0		0	
Crosswalk Width(ft)		16			16		16		16	
Two way Left Turn Lane										
Headway Factor	1.00	1.00	1.00	1.00	1.00	1.00	1.00	1.00	1.00	1.00
Turning Speed (mph)	15		9	15		9	35	9	15	9
Number of Detectors		2					1			
Detector Template		Thru					Left			
Leading Detector (ft)		100					20			
Trailing Detector (ft)		0					0			
Detector 1 Position(ft)		0					0			
Detector 1 Size(ft)		6					20			
Detector 1 Type		Cl+Ex					Cl+Ex			
Detector 1 Channel										
Detector 1 Extend (s)		0.0					0.0			
Detector 1 Queue (s)		0.0					0.0			
Detector 1 Delay (s)		0.0					0.0			
Detector 2 Position(ft)		94								
Detector 2 Size(ft)		6								
Detector 2 Type		Cl+Ex								
Detector 2 Channel										
Detector 2 Extend (s)		0.0								
Turn Type		NA					Prot			
Protected Phases		2					8			
Permitted Phases										
Detector Phase		2					8			
Switch Phase										

DocuSign Envelope ID: 5C03745C-4B01-4834-A65D-B77F558A4F46

Lane Group	EBL	EBT	EBR	WBL	WBT	WBR	NBL	NBR	SEL	SER
Minimum Initial (s)		10.0					10.0			
Minimum Split (s)		17.0					17.0			
Total Split (s)		33.0					27.0			
Total Split (%)		55.0%					45.0%			
Maximum Green (s)		26.0					20.0			
Yellow Time (s)		5.0					5.0			
All-Red Time (s)		2.0					2.0			
Lost Time Adjust (s)		-2.0					-2.0			
Total Lost Time (s)		5.0					5.0			
Lead/Lag										
Lead-Lag Optimize?										
Vehicle Extension (s)		3.0					3.0			
Recall Mode		Min					Min			
Act Effct Green (s)		21.8					17.8			
Actuated g/C Ratio		0.44					0.36			
v/c Ratio		0.70					0.62			
Control Delay		17.4					19.3			
Queue Delay		0.0					0.0			
Total Delay		17.4					19.3			
LOS		B					B			
Approach Delay		17.4					19.3			
Approach LOS		B					B			
Queue Length 50th (ft)		125					98			
Queue Length 95th (ft)		242					194			
Internal Link Dist (ft)		34			115		80		126	
Turn Bay Length (ft)										
Base Capacity (vph)		1057					830			
Starvation Cap Reductn		0					0			
Spillback Cap Reductn		0					0			
Storage Cap Reductn		0					0			
Reduced v/c Ratio		0.52					0.48			

Intersection Summary			
Area Type:	Other		
Cycle Length: 60			
Actuated Cycle Length: 50			
Natural Cycle: 50			
Control Type: Actuated-Uncoordinated			
Maximum v/c Ratio: 0.70			
Intersection Signal Delay: 18.2		Intersection LOS: B	
Intersection Capacity Utilization 55.1%		ICU Level of Service B	
Analysis Period (min) 15			

Splits and Phases: 7: NC 191 Connector WB & NC 191 Connector EB

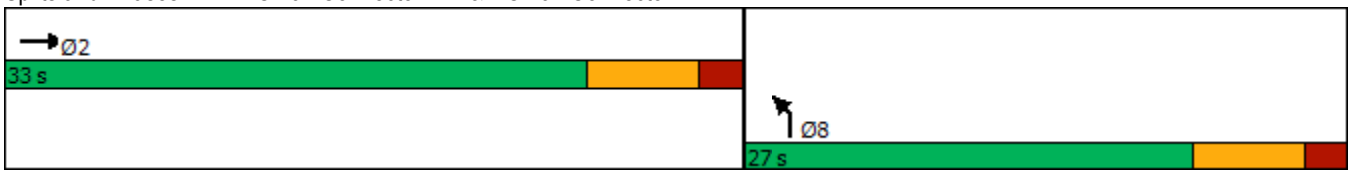

DocuSign Envelope ID: 5C03745C-4B01-4834-A65D-B77F558A4F46

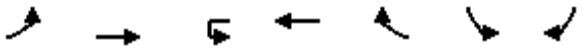

Lane Group	EBL	EBT	WBU	WBT	WBR	SBL	SBR
Lane Configurations							
Traffic Volume (vph)	62	629	0	701	412	368	62
Future Volume (vph)	62	629	0	701	412	368	62
Ideal Flow (vphpl)	1900	1900	1900	1900	1900	1900	1900
Grade (%)		-9%		5%		-9%	
Storage Length (ft)	500		350		0	0	400
Storage Lanes	1		1		1	2	1
Taper Length (ft)	25		25			25	
Lane Util. Factor	1.00	1.00	1.00	1.00	1.00	0.97	1.00
Frt					0.850		0.850
Flt Protected	0.950					0.950	
Satd. Flow (prot)	1715	1805	1715	1715	1458	3485	1607
Flt Permitted	0.950					0.950	
Satd. Flow (perm)	1715	1805	1715	1715	1458	3485	1607
Right Turn on Red					No		No
Satd. Flow (RTOR)							
Link Speed (mph)		35		35		45	
Link Distance (ft)		1579		1808		1089	
Travel Time (s)		30.8		35.2		16.5	
Peak Hour Factor	0.90	0.90	0.90	0.90	0.90	0.90	0.90
Heavy Vehicles (%)	10%	10%	8%	8%	8%	5%	5%
Adj. Flow (vph)	69	699	0	779	458	409	69
Shared Lane Traffic (%)							
Lane Group Flow (vph)	69	699	0	779	458	409	69
Enter Blocked Intersection	No	No	No	No	No	No	No
Lane Alignment	Left	Left	R NA	Left	Right	Left	Right
Median Width(ft)		12		12		24	
Link Offset(ft)		0		0		0	
Crosswalk Width(ft)		16		16		16	
Two way Left Turn Lane							
Headway Factor	0.94	0.94	1.03	1.03	1.03	0.94	0.94
Turning Speed (mph)	15		9		9	15	9
Number of Detectors	1	2	1	2	1	1	1
Detector Template	Left	Thru	Left	Thru	Right	Left	Right
Leading Detector (ft)	20	100	20	100	20	20	20
Trailing Detector (ft)	0	0	0	0	0	0	0
Detector 1 Position(ft)	0	0	0	0	0	0	0
Detector 1 Size(ft)	20	6	20	6	20	20	20
Detector 1 Type	Cl+Ex	Cl+Ex	Cl+Ex	Cl+Ex	Cl+Ex	Cl+Ex	Cl+Ex
Detector 1 Channel							
Detector 1 Extend (s)	0.0	0.0	0.0	0.0	0.0	0.0	0.0
Detector 1 Queue (s)	0.0	0.0	0.0	0.0	0.0	0.0	0.0
Detector 1 Delay (s)	0.0	0.0	0.0	0.0	0.0	0.0	0.0
Detector 2 Position(ft)		94		94			
Detector 2 Size(ft)		6		6			
Detector 2 Type		Cl+Ex		Cl+Ex			
Detector 2 Channel							
Detector 2 Extend (s)		0.0		0.0			
Turn Type	Prot	NA	Prot	NA	pm+ov	Prot	pm+ov

DocuSign Envelope ID: 5C03745C-4B01-4834-A65D-B77F558A4F46

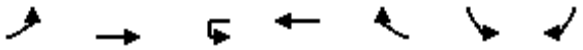

Lane Group	EBL	EBT	WBU	WBT	WBR	SBL	SBR
Protected Phases	5	2	1	6	4	4	5
Permitted Phases					6		4
Detector Phase	5	2	1	6	4	4	5
Switch Phase							
Minimum Initial (s)	7.0	10.0	7.0	10.0	7.0	7.0	7.0
Minimum Split (s)	13.7	17.3	13.3	17.3	13.8	13.8	13.7
Total Split (s)	18.0	112.0	14.0	108.0	34.0	34.0	18.0
Total Split (%)	11.3%	70.0%	8.8%	67.5%	21.3%	21.3%	11.3%
Maximum Green (s)	11.3	104.7	7.7	100.7	27.2	27.2	11.3
Yellow Time (s)	3.3	4.6	3.0	4.6	3.3	3.3	3.3
All-Red Time (s)	3.4	2.7	3.3	2.7	3.5	3.5	3.4
Lost Time Adjust (s)	-1.7	-2.3	-1.3	-2.3	-2.3	-1.8	-1.8
Total Lost Time (s)	5.0	5.0	5.0	5.0	4.5	5.0	4.9
Lead/Lag	Lead	Lead	Lag	Lag			Lead
Lead-Lag Optimize?	Yes	Yes	Yes	Yes			Yes
Vehicle Extension (s)	2.0	3.0	2.0	3.0	3.0	3.0	2.0
Recall Mode	None	C-Max	None	C-Max	None	None	None
Act Effct Green (s)	11.6	124.2		107.6	138.9	25.8	42.5
Actuated g/C Ratio	0.07	0.78		0.67	0.87	0.16	0.27
v/c Ratio	0.56	0.50		0.68	0.36	0.73	0.16
Control Delay	88.6	8.3		11.3	1.9	71.6	44.6
Queue Delay	0.0	0.0		0.0	0.0	0.0	0.0
Total Delay	88.6	8.3		11.3	1.9	71.6	44.6
LOS	F	A		B	A	E	D
Approach Delay		15.5		7.8		67.7	
Approach LOS		B		A		E	
Queue Length 50th (ft)	71	242		270	28	211	55
Queue Length 95th (ft)	128	341		336	78	267	97
Internal Link Dist (ft)		1499		1728		1009	
Turn Bay Length (ft)	500						400
Base Capacity (vph)	139	1401		1153	1294	631	441
Starvation Cap Reductn	0	0		0	0	0	0
Spillback Cap Reductn	0	0		0	0	0	0
Storage Cap Reductn	0	0		0	0	0	0
Reduced v/c Ratio	0.50	0.50		0.68	0.35	0.65	0.16

Intersection Summary			
Area Type:	Other		
Cycle Length: 160			
Actuated Cycle Length: 160			
Offset: 15 (9%), Referenced to phase 2:EBT and 6:WBT, Start of Green			
Natural Cycle: 75			
Control Type: Actuated-Coordinated			
Maximum v/c Ratio: 0.73			
Intersection Signal Delay: 21.7		Intersection LOS: C	
Intersection Capacity Utilization 65.7%		ICU Level of Service C	
Analysis Period (min) 15			

DocuSign Envelope ID: 5C03745C-4B01-4834-A65D-B77F558A4F46

Splits and Phases: 8: NC 146 (Long Shoals Rd) & Clayton Rd

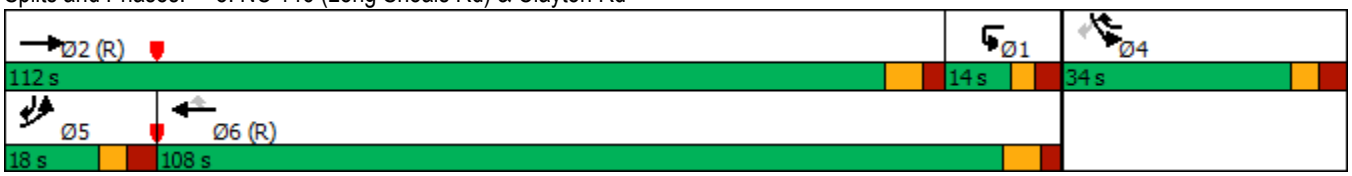

DocuSign Envelope ID: 5C03745C-4B01-4834-A65D-B77F558A4F46

Lane Group	EBU	EBT	EBR	WBL	WBT	NBL	NBR
Lane Configurations							
Traffic Volume (vph)	0	1001	46	488	943	28	280
Future Volume (vph)	0	1001	46	488	943	28	280
Ideal Flow (vphpl)	1900	1900	1900	1900	1900	1900	1900
Storage Length (ft)	325		0	325		200	0
Storage Lanes	1		0	1		1	1
Taper Length (ft)	25			25		25	
Lane Util. Factor	1.00	0.95	0.95	1.00	0.95	1.00	1.00
Frt		0.993					0.850
Flt Protected				0.950		0.950	
Satd. Flow (prot)	1759	3319	0	1671	3343	1752	1568
Flt Permitted				0.950		0.950	
Satd. Flow (perm)	1759	3319	0	1671	3343	1752	1568
Link Speed (mph)		45			45	35	
Link Distance (ft)		1808			1000	1062	
Travel Time (s)		27.4			15.2	20.7	
Peak Hour Factor	0.90	0.90	0.90	0.90	0.90	0.90	0.90
Heavy Vehicles (%)	8%	8%	8%	8%	8%	3%	3%
Adj. Flow (vph)	0	1112	51	542	1048	31	311
Shared Lane Traffic (%)							
Lane Group Flow (vph)	0	1163	0	542	1048	31	311
Enter Blocked Intersection	No	No	No	No	No	No	No
Lane Alignment	Left	Left	Right	Left	Left	Left	Right
Median Width(ft)		15			24	12	
Link Offset(ft)		0			0	0	
Crosswalk Width(ft)		16			16	16	
Two way Left Turn Lane							
Headway Factor	1.00	1.00	1.00	1.00	1.00	1.00	1.00
Turning Speed (mph)	9		9	15		15	9
Sign Control		Free			Free	Stop	

Intersection Summary			
Area Type:	Other		
Control Type: Unsignalized			
Intersection Capacity Utilization 69.5%		ICU Level of Service C	
Analysis Period (min) 15			

DocuSign Envelope ID: 5C03745C-4B01-4834-A65D-B77F558A4F46

Lane Group	EBL	EBT	EBR2	WBL	WBT	SEL	SER2	NWL
Lane Configurations								
Traffic Volume (vph)	265	788	228	629	904	934	298	229
Future Volume (vph)	265	788	228	629	904	934	298	229
Ideal Flow (vphpl)	1900	1900	1900	1900	1900	1900	1900	1900
Grade (%)		3%			-7%			
Storage Length (ft)	475			0		0		0
Storage Lanes	2			2		2		2
Taper Length (ft)	25			25		25		25
Lane Util. Factor	0.97	0.95	1.00	0.97	0.95	0.97	1.00	0.97
Frt			0.850				0.850	
Flt Protected	0.950			0.950		0.950		0.950
Satd. Flow (prot)	3080	3292	1420	3236	3593	3434	1525	3291
Flt Permitted	0.950			0.950		0.950		0.950
Satd. Flow (perm)	3080	3292	1420	3236	3593	3434	1525	3291
Right Turn on Red			Yes				Yes	
Satd. Flow (RTOR)			152				153	
Link Speed (mph)		45			45			
Link Distance (ft)		1000			418			
Travel Time (s)		15.2			6.3			
Peak Hour Factor	0.90	0.90	0.90	0.90	0.90	0.90	0.90	0.90
Heavy Vehicles (%)	12%	8%	12%	12%	4%	4%	8%	8%
Adj. Flow (vph)	294	876	253	699	1004	1038	331	254
Shared Lane Traffic (%)								
Lane Group Flow (vph)	294	876	253	699	1004	1038	331	254
Enter Blocked Intersection	No	No	No	No	No	No	No	No
Lane Alignment	Left	Left	Right	Left	Left	Left	Right	Left
Median Width(ft)		24			24			
Link Offset(ft)		0			0			
Crosswalk Width(ft)		16			16			
Two way Left Turn Lane								
Headway Factor	1.02	1.02	1.02	0.96	0.96	0.97	0.97	0.98
Turning Speed (mph)	15		9	15		15	9	15
Number of Detectors	1	2	1	1	2	1	1	1
Detector Template	Left	Thru	Right	Left	Thru	Left	Right	Left
Leading Detector (ft)	20	100	20	20	100	20	20	20
Trailing Detector (ft)	0	0	0	0	0	0	0	0
Detector 1 Position(ft)	0	0	0	0	0	0	0	0
Detector 1 Size(ft)	20	6	20	20	6	20	20	20
Detector 1 Type	Cl+Ex	Cl+Ex	Cl+Ex	Cl+Ex	Cl+Ex	Cl+Ex	Cl+Ex	Cl+Ex
Detector 1 Channel								
Detector 1 Extend (s)	0.0	0.0	0.0	0.0	0.0	0.0	0.0	0.0
Detector 1 Queue (s)	0.0	0.0	0.0	0.0	0.0	0.0	0.0	0.0
Detector 1 Delay (s)	0.0	0.0	0.0	0.0	0.0	0.0	0.0	0.0
Detector 2 Position(ft)		94			94			
Detector 2 Size(ft)		6			6			
Detector 2 Type		Cl+Ex			Cl+Ex			
Detector 2 Channel								
Detector 2 Extend (s)		0.0			0.0			
Turn Type	Prot	NA	Free	Prot	NA	Prot	Free	Prot

DocuSign Envelope ID: 5C03745C-4B01-4834-A65D-B77F558A4F46



Lane Group	EBL	EBT	EBR2	WBL	WBT	SEL	SER2	NWL
Protected Phases	5	2		1	6	4		8
Permitted Phases			Free				Free	
Detector Phase	5	2		1	6	4		8
Switch Phase								
Minimum Initial (s)	7.0	12.0		7.0	12.0	7.0		7.0
Minimum Split (s)	15.3	21.0		14.5	21.0	15.0		15.0
Total Split (s)	28.0	81.0		36.0	89.0	43.0		43.0
Total Split (%)	17.5%	50.6%		22.5%	55.6%	26.9%		26.9%
Maximum Green (s)	19.7	72.0		28.5	80.0	35.0		35.0
Yellow Time (s)	3.1	5.2		3.6	5.2	3.5		3.5
All-Red Time (s)	5.2	3.8		3.9	3.8	4.5		4.5
Lost Time Adjust (s)	-3.3	-4.0		-2.5	-4.0	-3.0		-3.0
Total Lost Time (s)	5.0	5.0		5.0	5.0	5.0		5.0
Lead/Lag	Lag	Lead		Lag	Lead			
Lead-Lag Optimize?	Yes	Yes		Yes	Yes			
Vehicle Extension (s)	2.0	6.0		2.0	6.0	2.0		2.0
Minimum Gap (s)	0.2	3.0		0.2	3.0	0.2		0.2
Time Before Reduce (s)	0.0	15.0		0.0	15.0	0.0		0.0
Time To Reduce (s)	0.0	30.0		0.0	30.0	0.0		0.0
Recall Mode	None	C-Max		None	C-Max	None		None
Act Effct Green (s)	23.0	76.0	160.0	31.0	84.0	38.0	160.0	38.0
Actuated g/C Ratio	0.14	0.48	1.00	0.19	0.52	0.24	1.00	0.24
v/c Ratio	0.67	0.56	0.18	1.12	0.53	1.27	0.22	0.33
Control Delay	73.6	23.2	0.3	124.9	15.7	180.4	0.3	51.8
Queue Delay	0.0	1.1	0.0	0.3	0.9	5.3	0.0	0.0
Total Delay	73.6	24.3	0.3	125.2	16.6	185.7	0.3	51.8
LOS	E	C	A	F	B	F	A	D
Approach Delay		30.2			61.2			
Approach LOS		C			E			
Queue Length 50th (ft)	157	337	0	~439	231	~704	0	114
Queue Length 95th (ft)	210	375	0	#571	290	#840	0	157
Internal Link Dist (ft)		920			338			
Turn Bay Length (ft)	475							
Base Capacity (vph)	442	1563	1420	626	1886	815	1525	781
Starvation Cap Reductn	0	0	0	23	564	0	0	0
Spillback Cap Reductn	0	425	0	0	0	413	0	0
Storage Cap Reductn	0	0	0	0	0	0	0	0
Reduced v/c Ratio	0.67	0.77	0.18	1.16	0.76	2.58	0.22	0.33

Intersection Summary			
Area Type:	Other		
Cycle Length: 160			
Actuated Cycle Length: 160			
Offset: 0 (0%), Referenced to phase 2:EBT and 6:WBT, Start of Green, Master Intersection			
Natural Cycle: 150			
Control Type: Actuated-Coordinated			
Maximum v/c Ratio: 1.27			
Intersection Signal Delay: 74.4		Intersection LOS: E	
Intersection Capacity Utilization 78.9%		ICU Level of Service D	

DocuSign Envelope ID: 5C03745C-4B01-4834-A65D-B77F558A4F46

Analysis Period (min) 15

~ Volume exceeds capacity, queue is theoretically infinite.
Queue shown is maximum after two cycles.

95th percentile volume exceeds capacity, queue may be longer.
Queue shown is maximum after two cycles.

Splits and Phases: 10: I-26 Ramp & NC 146 (Long Shoals Rd)

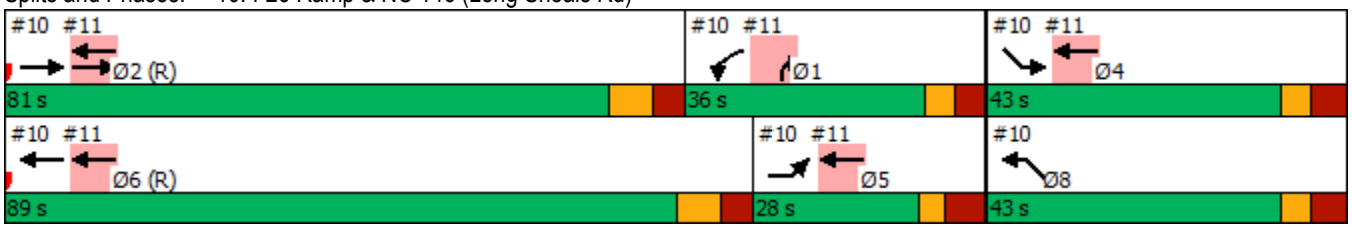

DocuSign Envelope ID: 5C03745C-4B01-4834-A65D-B77F558A4F46

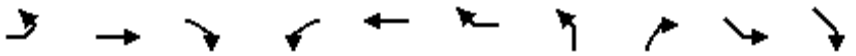

Lane Group	EBL	EBT	EBR	WBL	WBT	WBR	NBL	NBR	SEL	SER	Ø4	Ø5
Lane Configurations		↑↑			↑↑	↱		↱↱				
Traffic Volume (vph)	0	1722	0	0	1533	954	0	550	0	0		
Future Volume (vph)	0	1722	0	0	1533	954	0	550	0	0		
Ideal Flow (vphpl)	1900	1900	1900	1900	1900	1900	1900	1900	1900	1900		
Storage Length (ft)	0		0	0		275	0	0	0	0		
Storage Lanes	0		0	0		1	0	2	0	0		
Taper Length (ft)	25			25			25		25			
Lane Util. Factor	1.00	0.95	1.00	1.00	0.95	1.00	1.00	0.88	1.00	1.00		
Frt						0.850		0.850				
Flt Protected												
Satd. Flow (prot)	0	3471	0	0	3471	1442	0	2733	0	0		
Flt Permitted												
Satd. Flow (perm)	0	3471	0	0	3471	1442	0	2733	0	0		
Right Turn on Red			No			No		No				
Satd. Flow (RTOR)												
Link Speed (mph)		45			45		45		45			
Link Distance (ft)		418			593		396		464			
Travel Time (s)		6.3			9.0		6.0		7.0			
Peak Hour Factor	0.90	0.90	0.90	0.90	0.90	0.90	0.90	0.90	0.90	0.90		
Heavy Vehicles (%)	2%	4%	2%	2%	4%	12%	2%	4%	2%	2%		
Adj. Flow (vph)	0	1913	0	0	1703	1060	0	611	0	0		
Shared Lane Traffic (%)												
Lane Group Flow (vph)	0	1913	0	0	1703	1060	0	611	0	0		
Enter Blocked Intersection	No	No	No	No	No	No	No	No	No	No		
Lane Alignment	Left	L NA	Right	Left	Right	Right	Left	R NA	Left	Right		
Median Width(ft)		0			24		0		0			
Link Offset(ft)		0			0		0		0			
Crosswalk Width(ft)		16			16		16		16			
Two way Left Turn Lane												
Headway Factor	1.00	1.00	1.00	1.00	1.00	1.00	1.00	1.00	1.00	1.00		
Turning Speed (mph)	15		9	15		9	15	9	15	9		
Number of Detectors		2			2	1		1				
Detector Template		Thru			Thru	Right		Right				
Leading Detector (ft)		100			100	20		20				
Trailing Detector (ft)		0			0	0		0				
Detector 1 Position(ft)		0			0	0		0				
Detector 1 Size(ft)		6			6	20		20				
Detector 1 Type		Cl+Ex			Cl+Ex	Cl+Ex		Cl+Ex				
Detector 1 Channel												
Detector 1 Extend (s)		0.0			0.0	0.0		0.0				
Detector 1 Queue (s)		0.0			0.0	0.0		0.0				
Detector 1 Delay (s)		0.0			0.0	0.0		0.0				
Detector 2 Position(ft)		94			94							
Detector 2 Size(ft)		6			6							
Detector 2 Type		Cl+Ex			Cl+Ex							
Detector 2 Channel												
Detector 2 Extend (s)		0.0			0.0							
Turn Type		NA			NA	Free		Prot				
Protected Phases		2			2 4 5 6			1			4	5

DocuSign Envelope ID: 5C03745C-4B01-4834-A65D-B77F558A4F46

Lane Group	Ø6	Ø8
Lane Configurations		
Traffic Volume (vph)		
Future Volume (vph)		
Ideal Flow (vphpl)		
Storage Length (ft)		
Storage Lanes		
Taper Length (ft)		
Lane Util. Factor		
Frt		
Flt Protected		
Satd. Flow (prot)		
Flt Permitted		
Satd. Flow (perm)		
Right Turn on Red		
Satd. Flow (RTOR)		
Link Speed (mph)		
Link Distance (ft)		
Travel Time (s)		
Peak Hour Factor		
Heavy Vehicles (%)		
Adj. Flow (vph)		
Shared Lane Traffic (%)		
Lane Group Flow (vph)		
Enter Blocked Intersection		
Lane Alignment		
Median Width(ft)		
Link Offset(ft)		
Crosswalk Width(ft)		
Two way Left Turn Lane		
Headway Factor		
Turning Speed (mph)		
Number of Detectors		
Detector Template		
Leading Detector (ft)		
Trailing Detector (ft)		
Detector 1 Position(ft)		
Detector 1 Size(ft)		
Detector 1 Type		
Detector 1 Channel		
Detector 1 Extend (s)		
Detector 1 Queue (s)		
Detector 1 Delay (s)		
Detector 2 Position(ft)		
Detector 2 Size(ft)		
Detector 2 Type		
Detector 2 Channel		
Detector 2 Extend (s)		
Turn Type		
Protected Phases	6	8

DocuSign Envelope ID: 5C03745C-4B01-4834-A65D-B77F558A4F46

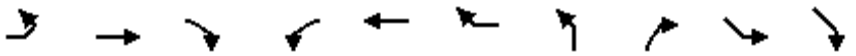

Lane Group	EBL	EBT	EBR	WBL	WBT	WBR	NBL	NBR	SEL	SER	Ø4	Ø5
Permitted Phases						Free						
Detector Phase		2			2 4 5 6			1				
Switch Phase												
Minimum Initial (s)		12.0						7.0			7.0	7.0
Minimum Split (s)		21.0						14.5			15.0	15.3
Total Split (s)		81.0						36.0			43.0	28.0
Total Split (%)		50.6%						22.5%			27%	18%
Maximum Green (s)		72.0						28.5			35.0	19.7
Yellow Time (s)		5.2						3.6			3.5	3.1
All-Red Time (s)		3.8						3.9			4.5	5.2
Lost Time Adjust (s)		0.0						0.0				
Total Lost Time (s)		9.0						7.5				
Lead/Lag		Lead						Lag				Lag
Lead-Lag Optimize?		Yes						Yes				Yes
Vehicle Extension (s)		6.0						2.0			2.0	2.0
Minimum Gap (s)		3.0						0.2			0.2	0.2
Time Before Reduce (s)		15.0						0.0			0.0	0.0
Time To Reduce (s)		30.0						0.0			0.0	0.0
Recall Mode		C-Max						None			None	None
Act Effct Green (s)		72.0			160.0	160.0		28.5				
Actuated g/C Ratio		0.45			1.00	1.00		0.18				
v/c Ratio		1.23			0.49	0.74		1.26				
Control Delay		135.6			0.0	6.3		182.9				
Queue Delay		0.1			0.1	0.0		0.6				
Total Delay		135.8			0.1	6.3		183.5				
LOS		F			A	A		F				
Approach Delay		135.8			2.5		183.5					
Approach LOS		F			A		F					
Queue Length 50th (ft)		~1316			0	750		~452				
Queue Length 95th (ft)		m#1113			m0	m0		#592				
Internal Link Dist (ft)		338			513		316		384			
Turn Bay Length (ft)						275						
Base Capacity (vph)		1561			3471	1442		486				
Starvation Cap Reductn		68			0	0		0				
Spillback Cap Reductn		12			429	0		34				
Storage Cap Reductn		0			0	0		0				
Reduced v/c Ratio		1.28			0.56	0.74		1.35				

Intersection Summary			
Area Type:	Other		
Cycle Length: 160			
Actuated Cycle Length: 160			
Offset: 0 (0%), Referenced to phase 2:EBT and 6:WBT, Start of Green, Master Intersection			
Natural Cycle: 150			
Control Type: Actuated-Coordinated			
Maximum v/c Ratio: 1.27			
Intersection Signal Delay: 71.7		Intersection LOS: E	
Intersection Capacity Utilization 80.6%		ICU Level of Service D	
Analysis Period (min) 15			

DocuSign Envelope ID: 5C03745C-4B01-4834-A65D-B77F558A4F46

Lane Group	Ø6	Ø8
Permitted Phases		
Detector Phase		
Switch Phase		
Minimum Initial (s)	12.0	7.0
Minimum Split (s)	21.0	15.0
Total Split (s)	89.0	43.0
Total Split (%)	56%	27%
Maximum Green (s)	80.0	35.0
Yellow Time (s)	5.2	3.5
All-Red Time (s)	3.8	4.5
Lost Time Adjust (s)		
Total Lost Time (s)		
Lead/Lag	Lead	
Lead-Lag Optimize?	Yes	
Vehicle Extension (s)	6.0	2.0
Minimum Gap (s)	3.0	0.2
Time Before Reduce (s)	15.0	0.0
Time To Reduce (s)	30.0	0.0
Recall Mode	C-Max	None
Act Effct Green (s)		
Actuated g/C Ratio		
v/c Ratio		
Control Delay		
Queue Delay		
Total Delay		
LOS		
Approach Delay		
Approach LOS		
Queue Length 50th (ft)		
Queue Length 95th (ft)		
Internal Link Dist (ft)		
Turn Bay Length (ft)		
Base Capacity (vph)		
Starvation Cap Reductn		
Spillback Cap Reductn		
Storage Cap Reductn		
Reduced v/c Ratio		

Intersection Summary

DocuSign Envelope ID: 5C03745C-4B01-4834-A65D-B77F558A4F46

~ Volume exceeds capacity, queue is theoretically infinite.
Queue shown is maximum after two cycles.

95th percentile volume exceeds capacity, queue may be longer.
Queue shown is maximum after two cycles.

m Volume for 95th percentile queue is metered by upstream signal.

Splits and Phases: 11: I-26 NWB Ramp & NC 146 (Long Shoals Rd)

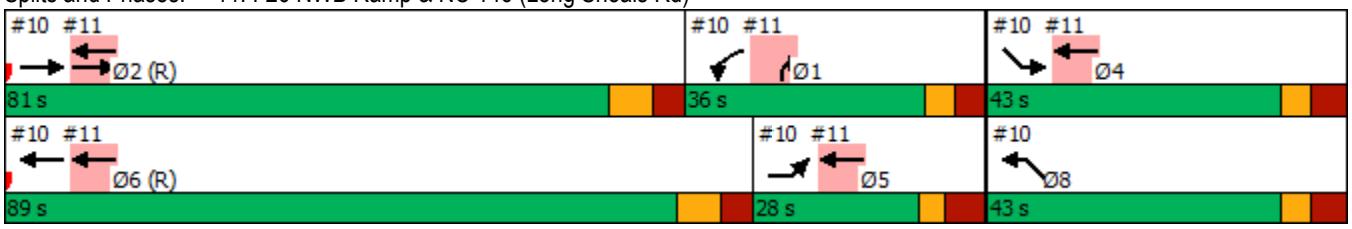

DocuSign Envelope ID: 5C03745C-4B01-4834-A65D-B77F558A4F46

Lane Group	EBL	EBT	EBR	WBL	WBT	WBR	NBL	NBT	NBR	SBL	SBT	SBR
Lane Configurations												
Traffic Volume (vph)	701	1504	67	17	1542	462	84	41	20	509	40	861
Future Volume (vph)	701	1504	67	17	1542	462	84	41	20	509	40	861
Ideal Flow (vphpl)	1900	1900	1900	1900	1900	1900	1900	1900	1900	1900	1900	1900
Grade (%)		6%			-6%			11%			7%	
Storage Length (ft)	350		400	250		225	0		0	450		0
Storage Lanes	2		1	1		1	0		0	1		1
Taper Length (ft)	25			25			25			25		
Lane Util. Factor	0.97	0.95	1.00	1.00	0.95	1.00	1.00	1.00	1.00	0.95	0.95	1.00
Frt			0.850			0.850		0.982				0.850
Flt Protected	0.950			0.950				0.972		0.950	0.959	
Satd. Flow (prot)	3266	3367	1506	1788	3575	1599	0	1632	0	1561	1576	1470
Flt Permitted	0.950			0.950				0.972		0.950	0.959	
Satd. Flow (perm)	3266	3367	1506	1788	3575	1599	0	1632	0	1561	1576	1470
Right Turn on Red			No			No			No			No
Satd. Flow (RTOR)												
Link Speed (mph)		45			45			25			25	
Link Distance (ft)		593			1582			722			992	
Travel Time (s)		9.0			24.0			19.7			27.1	
Peak Hour Factor	0.90	0.90	0.90	0.90	0.90	0.90	0.90	0.90	0.90	0.90	0.90	0.90
Heavy Vehicles (%)	4%	4%	4%	4%	4%	4%	5%	5%	5%	6%	6%	6%
Adj. Flow (vph)	779	1671	74	19	1713	513	93	46	22	566	44	957
Shared Lane Traffic (%)										46%		
Lane Group Flow (vph)	779	1671	74	19	1713	513	0	161	0	306	304	957
Enter Blocked Intersection	No	No	No	No	No	No	No	No	No	No	No	No
Lane Alignment	Left	Left	Right	Left	Left	Right	Left	Left	Right	Left	Left	Right
Median Width(ft)		24			24			0			12	
Link Offset(ft)		0			0			0			0	
Crosswalk Width(ft)		16			16			16			16	
Two way Left Turn Lane												
Headway Factor	1.04	1.04	1.04	0.96	0.96	0.96	1.08	1.08	1.08	1.05	1.05	1.05
Turning Speed (mph)	15		9	15		9	15		9	15		9
Number of Detectors	1	2	1	1	2	1	1	2		1	2	1
Detector Template	Left	Thru	Right	Left	Thru	Right	Left	Thru		Left	Thru	Right
Leading Detector (ft)	20	100	20	20	100	20	20	100		20	100	20
Trailing Detector (ft)	0	0	0	0	0	0	0	0		0	0	0
Detector 1 Position(ft)	0	0	0	0	0	0	0	0		0	0	0
Detector 1 Size(ft)	20	6	20	20	6	20	20	6		20	6	20
Detector 1 Type	Cl+Ex	Cl+Ex	Cl+Ex	Cl+Ex	Cl+Ex	Cl+Ex	Cl+Ex	Cl+Ex		Cl+Ex	Cl+Ex	Cl+Ex
Detector 1 Channel												
Detector 1 Extend (s)	0.0	0.0	0.0	0.0	0.0	0.0	0.0	0.0		0.0	0.0	0.0
Detector 1 Queue (s)	0.0	0.0	0.0	0.0	0.0	0.0	0.0	0.0		0.0	0.0	0.0
Detector 1 Delay (s)	0.0	0.0	0.0	0.0	0.0	0.0	0.0	0.0		0.0	0.0	0.0
Detector 2 Position(ft)		94			94			94			94	
Detector 2 Size(ft)		6			6			6			6	
Detector 2 Type		Cl+Ex			Cl+Ex			Cl+Ex			Cl+Ex	
Detector 2 Channel												
Detector 2 Extend (s)		0.0			0.0			0.0			0.0	
Turn Type	Prot	NA	pm+ov	Prot	NA	pm+ov	Split	NA		Split	NA	pm+ov

DocuSign Envelope ID: 5C03745C-4B01-4834-A65D-B77F558A4F46

Lane Group	EBL	EBT	EBR	WBL	WBT	WBR	NBL	NBT	NBR	SBL	SBT	SBR
Protected Phases	5	2	4	1	6	3	4	4		3	3	5
Permitted Phases			2			6						3
Detector Phase	5	2	4	1	6	3	4	4		3	3	5
Switch Phase												
Minimum Initial (s)	7.0	12.0	7.0	7.0	12.0	7.0	7.0	7.0		7.0	7.0	7.0
Minimum Split (s)	13.3	20.7	39.3	13.3	32.6	13.4	39.3	39.3		13.4	13.4	13.3
Total Split (s)	49.0	99.0	18.0	14.0	64.0	29.0	18.0	18.0		29.0	29.0	49.0
Total Split (%)	30.6%	61.9%	11.3%	8.8%	40.0%	18.1%	11.3%	11.3%		18.1%	18.1%	30.6%
Maximum Green (s)	42.7	93.3	11.7	7.7	57.4	22.6	11.7	11.7		22.6	22.6	42.7
Yellow Time (s)	3.0	4.1	3.0	3.1	5.1	3.0	3.0	3.0		3.0	3.0	3.0
All-Red Time (s)	3.3	1.6	3.3	3.2	1.5	3.4	3.3	3.3		3.4	3.4	3.3
Lost Time Adjust (s)	-1.3	-0.7	-1.3	-1.3	-1.6	-1.4		-1.3		-1.4	-1.4	-1.3
Total Lost Time (s)	5.0	5.0	5.0	5.0	5.0	5.0		5.0		5.0	5.0	5.0
Lead/Lag	Lag	Lead	Lead	Lag	Lead	Lag	Lead	Lead		Lag	Lag	Lag
Lead-Lag Optimize?	Yes	Yes	Yes	Yes	Yes	Yes	Yes	Yes		Yes	Yes	Yes
Vehicle Extension (s)	3.0	6.0	3.0	2.0	6.0	3.0	3.0	3.0		3.0	3.0	3.0
Minimum Gap (s)	0.2	3.0	0.2	0.2	3.0	0.2	0.2	0.2		0.2	0.2	0.2
Time Before Reduce (s)	0.0	20.0	0.0	0.0	20.0	0.0	0.0	0.0		0.0	0.0	0.0
Time To Reduce (s)	0.0	30.0	0.0	0.0	30.0	0.0	0.0	0.0		0.0	0.0	0.0
Recall Mode	None	C-Max	None	None	C-Max	None	None	None		None	None	None
Walk Time (s)		7.0	7.0		7.0		7.0	7.0				
Flash Dont Walk (s)		8.0	26.0		19.0		26.0	26.0				
Pedestrian Calls (#/hr)		0	0		0		0	0				
Act Effct Green (s)	44.0	99.6	114.6	8.7	59.0	88.0		13.0		24.0	24.0	68.0
Actuated g/C Ratio	0.28	0.62	0.72	0.05	0.37	0.55		0.08		0.15	0.15	0.42
v/c Ratio	0.87	0.80	0.07	0.20	1.30	0.58		1.22		1.31	1.29	1.53
Control Delay	44.7	12.5	2.2	77.1	181.1	27.2		206.4		216.0	208.7	275.0
Queue Delay	0.0	3.9	0.0	0.0	0.0	0.0		0.0		0.0	0.0	0.0
Total Delay	44.7	16.4	2.2	77.1	181.1	27.2		206.4		216.0	208.7	275.0
LOS	D	B	A	E	F	C		F		F	F	F
Approach Delay		24.7			145.0			206.4			250.6	
Approach LOS		C			F			F			F	
Queue Length 50th (ft)	431	247	5	19	~1202	347		~205		~430	~424	~1243
Queue Length 95th (ft)	m310	m200	m4	50	#1337	466		#364		#641	#633	#1659
Internal Link Dist (ft)		513			1502			642			912	
Turn Bay Length (ft)	350		400	250		225				450		
Base Capacity (vph)	898	2096	1078	100	1318	879		132		234	236	624
Starvation Cap Reductn	0	340	0	0	0	0		0		0	0	0
Spillback Cap Reductn	0	0	0	0	0	0		0		0	0	0
Storage Cap Reductn	0	0	0	0	0	0		0		0	0	0
Reduced v/c Ratio	0.87	0.95	0.07	0.19	1.30	0.58		1.22		1.31	1.29	1.53

Intersection Summary	
Area Type:	Other
Cycle Length: 160	
Actuated Cycle Length: 160	
Offset: 146 (91%), Referenced to phase 2:EBT and 6:WBT, Start of Green	
Natural Cycle: 150	
Control Type: Actuated-Coordinated	

DocuSign Envelope ID: 5C03745C-4B01-4834-A65D-B77F558A4F46

Maximum v/c Ratio: 1.53	
Intersection Signal Delay: 125.3	Intersection LOS: F
Intersection Capacity Utilization 116.5%	ICU Level of Service H
Analysis Period (min) 15	

~ Volume exceeds capacity, queue is theoretically infinite.
Queue shown is maximum after two cycles.

95th percentile volume exceeds capacity, queue may be longer.
Queue shown is maximum after two cycles.

m Volume for 95th percentile queue is metered by upstream signal.

Splits and Phases: 12: Skyland Inn Dr/Schenck Pkwy & NC 146 (Long Shoals Rd)

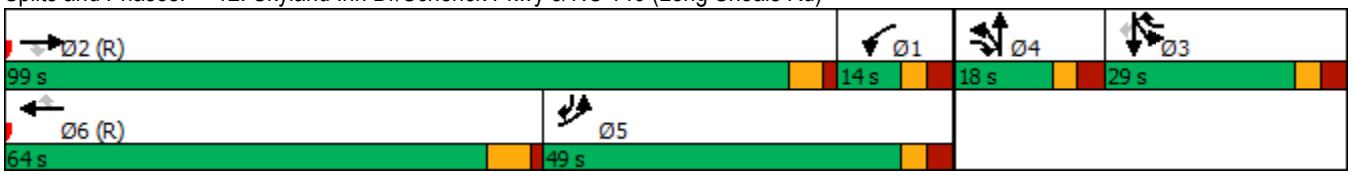

DocuSign Envelope ID: 5C03745C-4B01-4834-A65D-B77F558A4F46

Lane Group	EBL	EBT	EBR	WBL	WBT	WBR	NBL	NBT	NBR	SBL	SBT	SBR
Lane Configurations												
Traffic Volume (vph)	98	327	63	145	402	258	120	40	226	394	39	183
Future Volume (vph)	98	327	63	145	402	258	120	40	226	394	39	183
Ideal Flow (vphpl)	1900	1900	1900	1900	1900	1900	1900	1900	1900	1900	1900	1900
Storage Length (ft)	0		200	0		200	0		200	0		200
Storage Lanes	0		1	0		1	0		1	0		1
Taper Length (ft)	25			25			25			25		
Lane Util. Factor	1.00	1.00	1.00	1.00	1.00	1.00	1.00	1.00	1.00	1.00	1.00	1.00
Frt			0.850			0.850			0.850			0.850
Flt Protected		0.989			0.987			0.964			0.956	
Satd. Flow (prot)	0	1790	1538	0	1786	1538	0	1778	1568	0	1747	1553
Flt Permitted		0.989			0.987			0.964			0.956	
Satd. Flow (perm)	0	1790	1538	0	1786	1538	0	1778	1568	0	1747	1553
Link Speed (mph)		35			35			35			35	
Link Distance (ft)		2787			1029			961			1055	
Travel Time (s)		54.3			20.0			18.7			20.6	
Peak Hour Factor	0.90	0.90	0.90	0.90	0.90	0.90	0.90	0.90	0.90	0.90	0.90	0.90
Heavy Vehicles (%)	5%	5%	5%	5%	5%	5%	3%	3%	3%	4%	4%	4%
Adj. Flow (vph)	109	363	70	161	447	287	133	44	251	438	43	203
Shared Lane Traffic (%)												
Lane Group Flow (vph)	0	472	70	0	608	287	0	177	251	0	481	203
Enter Blocked Intersection	No	No	No	No	No	No	No	No	No	No	No	No
Lane Alignment	Left	Left	Right	Left	Left	Right	Left	Left	Right	Left	Left	Right
Median Width(ft)		0			0			0			0	
Link Offset(ft)		0			0			0			0	
Crosswalk Width(ft)		16			16			16			16	
Two way Left Turn Lane												
Headway Factor	1.00	1.00	1.00	1.00	1.00	1.00	1.00	1.00	1.00	1.00	1.00	1.00
Turning Speed (mph)	15		9	15		9	15		9	15		9
Sign Control		Yield			Yield			Yield			Yield	

Intersection Summary			
Area Type:	Other		
Control Type: Roundabout			
Intersection Capacity Utilization 92.3%		ICU Level of Service F	
Analysis Period (min) 15			

DocuSign Envelope ID: 5C03745C-4B01-4834-A65D-B77F558A4F46

Lane Group	NBL	NBR	SET	SER	NWL	NWT
Lane Configurations						
Traffic Volume (vph)	0	0	0	562	0	379
Future Volume (vph)	0	0	0	562	0	379
Ideal Flow (vphpl)	1900	1900	1900	1900	1900	1900
Lane Util. Factor	1.00	1.00	1.00	*1.00	1.00	0.91
Frt						
Flt Protected						
Satd. Flow (prot)	0	0	0	3393	0	4893
Flt Permitted						
Satd. Flow (perm)	0	0	0	3393	0	4893
Link Speed (mph)	45		45			25
Link Distance (ft)	263		323			131
Travel Time (s)	4.0		4.9			3.6
Peak Hour Factor	0.92	0.92	0.92	0.92	0.92	0.92
Heavy Vehicles (%)	2%	2%	2%	12%	2%	6%
Adj. Flow (vph)	0	0	0	611	0	412
Shared Lane Traffic (%)						
Lane Group Flow (vph)	0	0	0	611	0	412
Enter Blocked Intersection	No	No	No	No	No	No
Lane Alignment	Left	Right	Left	Right	Left	Left
Median Width(ft)	0		8			0
Link Offset(ft)	0		0			0
Crosswalk Width(ft)	16		16			16
Two way Left Turn Lane						
Headway Factor	1.00	1.00	1.00	1.00	1.00	1.00
Turning Speed (mph)	15	9		45	15	
Sign Control	Free		Free			Free

Intersection Summary			
Area Type:	Other		
Control Type: Unsignalized			
Intersection Capacity Utilization 23.0%		ICU Level of Service A	
Analysis Period (min) 15			

* User Entered Value

DocuSign Envelope ID: 5C03745C-4B01-4834-A65D-B77F558A4F46

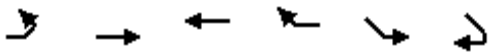

Lane Group	EBL	EBT	WBT	WBR	SEL	SER
Lane Configurations						
Traffic Volume (vph)	0	547	0	391	0	0
Future Volume (vph)	0	547	0	391	0	0
Ideal Flow (vphpl)	1900	1900	1900	1900	1900	1900
Grade (%)		2%	0%		0%	
Lane Util. Factor	1.00	1.00	1.00	*1.00	1.00	1.00
Frt						
Flt Protected						
Satd. Flow (prot)	0	1758	0	3393	0	0
Flt Permitted						
Satd. Flow (perm)	0	1758	0	3393	0	0
Link Speed (mph)		25	45		45	
Link Distance (ft)		718	860		674	
Travel Time (s)		19.6	13.0		10.2	
Peak Hour Factor	0.90	0.90	0.90	0.90	0.90	0.90
Heavy Vehicles (%)	2%	7%	2%	12%	2%	2%
Adj. Flow (vph)	0	608	0	434	0	0
Shared Lane Traffic (%)						
Lane Group Flow (vph)	0	608	0	434	0	0
Enter Blocked Intersection	No	No	No	No	No	No
Lane Alignment	Left	Left	Left	Right	Left	Right
Median Width(ft)		0	12		0	
Link Offset(ft)		0	0		0	
Crosswalk Width(ft)		16	16		16	
Two way Left Turn Lane						
Headway Factor	1.01	1.01	1.00	1.00	1.00	1.00
Turning Speed (mph)	15			45	15	9
Sign Control		Free	Free		Free	

Intersection Summary			
Area Type:	Other		
Control Type: Unsignalized			
Intersection Capacity Utilization 32.1%		ICU Level of Service A	
Analysis Period (min) 15			
* User Entered Value			

DocuSign Envelope ID: 5C03745C-4B01-4834-A65D-B77F558A4F46



Lane Group	EBT	EBR	WBL	WBT	NBL	NBR
Lane Configurations						
Traffic Volume (vph)	0	0	0	954	265	0
Future Volume (vph)	0	0	0	954	265	0
Ideal Flow (vphpl)	1900	1900	1900	1900	1900	1900
Lane Util. Factor	1.00	1.00	1.00	1.00	*1.00	1.00
Frt						
Flt Protected						
Satd. Flow (prot)	0	0	0	1696	3393	0
Flt Permitted						
Satd. Flow (perm)	0	0	0	1696	3393	0
Link Speed (mph)	45			45	45	
Link Distance (ft)	408			464	376	
Travel Time (s)	6.2			7.0	5.7	
Peak Hour Factor	0.90	0.90	0.90	0.90	0.90	0.90
Heavy Vehicles (%)	2%	2%	2%	12%	12%	2%
Adj. Flow (vph)	0	0	0	1060	294	0
Shared Lane Traffic (%)						
Lane Group Flow (vph)	0	0	0	1060	294	0
Enter Blocked Intersection	No	No	No	No	No	No
Lane Alignment	Left	Right	Left	Left	Left	Right
Median Width(ft)	0			0	24	
Link Offset(ft)	0			0	0	
Crosswalk Width(ft)	16			16	16	
Two way Left Turn Lane						
Headway Factor	1.00	1.00	1.00	1.00	1.00	1.00
Turning Speed (mph)		9	15		45	9
Sign Control	Free			Yield	Free	

Intersection Summary			
Area Type:	Other		
Control Type: Unsignalized			
Intersection Capacity Utilization 64.4%		ICU Level of Service C	
Analysis Period (min) 15			

* User Entered Value

DocuSign Envelope ID: 5C03745C-4B01-4834-A65D-B77F558A4F46

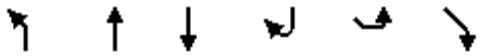

Lane Group	NBL	NBT	SBT	SBR	SEL	SER
Lane Configurations						
Traffic Volume (vph)	229	550	0	0	0	0
Future Volume (vph)	229	550	0	0	0	0
Ideal Flow (vphpl)	1900	1900	1900	1900	1900	1900
Lane Util. Factor	0.91	0.91	1.00	1.00	1.00	1.00
Frt						
Flt Protected	0.950	0.998				
Satd. Flow (prot)	1521	3313	0	0	0	0
Flt Permitted	0.950	0.998				
Satd. Flow (perm)	1521	3313	0	0	0	0
Link Speed (mph)		45	45		45	
Link Distance (ft)		214	396		556	
Travel Time (s)		3.2	6.0		8.4	
Peak Hour Factor	0.90	0.90	0.90	0.90	0.90	0.90
Heavy Vehicles (%)	8%	4%	2%	2%	2%	2%
Adj. Flow (vph)	254	611	0	0	0	0
Shared Lane Traffic (%)	10%					
Lane Group Flow (vph)	229	636	0	0	0	0
Enter Blocked Intersection	No	No	No	No	No	No
Lane Alignment	Right	R NA	Left	Right	Left	Right
Median Width(ft)		12	12		0	
Link Offset(ft)		0	0		0	
Crosswalk Width(ft)		16	16		16	
Two way Left Turn Lane						
Headway Factor	1.00	1.00	1.00	1.00	1.00	1.00
Turning Speed (mph)	45			9	15	9
Sign Control		Free	Free		Free	

Intersection Summary			
Area Type:	Other		
Control Type: Unsignalized			
Intersection Capacity Utilization 18.5%		ICU Level of Service A	
Analysis Period (min) 15			

DocuSign Envelope ID: 5C03745C-4B01-4834-A65D-B77F558A4F46

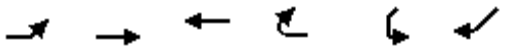

Lane Group	EBL	EBT	WBT	WBR	SWL	SWR
Lane Configurations						
Traffic Volume (vph)	499	459	0	0	0	0
Future Volume (vph)	499	459	0	0	0	0
Ideal Flow (vphpl)	1900	1900	1900	1900	1900	1900
Lane Util. Factor	1.00	1.00	1.00	1.00	1.00	1.00
Frt						
Flt Protected	0.950					
Satd. Flow (prot)	1719	1696	0	0	0	0
Flt Permitted	0.950					
Satd. Flow (perm)	1719	1696	0	0	0	0
Link Speed (mph)		35	35		35	
Link Distance (ft)		102	290		114	
Travel Time (s)		2.0	5.6		2.2	
Peak Hour Factor	0.90	0.90	0.90	0.90	0.90	0.90
Heavy Vehicles (%)	5%	12%	2%	2%	2%	2%
Adj. Flow (vph)	554	510	0	0	0	0
Shared Lane Traffic (%)						
Lane Group Flow (vph)	554	510	0	0	0	0
Enter Blocked Intersection	No	No	No	No	No	No
Lane Alignment	Left	Left	Left	Right	Left	Right
Median Width(ft)		12	12		0	
Link Offset(ft)		0	0		0	
Crosswalk Width(ft)		16	16		16	
Two way Left Turn Lane						
Headway Factor	1.00	1.00	1.00	1.00	1.00	1.00
Turning Speed (mph)	15			9	15	9
Sign Control		Free	Free		Free	

Intersection Summary			
Area Type:	Other		
Control Type: Unsignalized			
Intersection Capacity Utilization 55.1%		ICU Level of Service B	
Analysis Period (min) 15			

DocuSign Envelope ID: 5C03745C-4B01-4834-A65D-B77F558A4F46

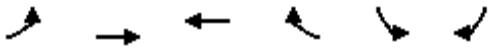

Lane Group	EBL	EBT	WBT	WBR	SBL	SBR
Lane Configurations						
Traffic Volume (vph)	0	499	0	0	1	0
Future Volume (vph)	0	499	0	0	1	0
Ideal Flow (vphpl)	1900	1900	1900	1900	1900	1900
Lane Util. Factor	1.00	1.00	1.00	1.00	1.00	1.00
Frt						
Flt Protected					0.950	
Satd. Flow (prot)	0	1696	0	0	1612	0
Flt Permitted					0.950	
Satd. Flow (perm)	0	1696	0	0	1612	0
Link Speed (mph)		35	35		35	
Link Distance (ft)		195	217		313	
Travel Time (s)		3.8	4.2		6.1	
Peak Hour Factor	0.90	0.90	0.90	0.90	0.90	0.90
Heavy Vehicles (%)	2%	12%	2%	2%	12%	2%
Adj. Flow (vph)	0	554	0	0	1	0
Shared Lane Traffic (%)						
Lane Group Flow (vph)	0	554	0	0	1	0
Enter Blocked Intersection	No	No	No	No	No	No
Lane Alignment	Left	Left	Left	Right	Left	Right
Median Width(ft)		0	0		12	
Link Offset(ft)		0	0		0	
Crosswalk Width(ft)		16	16		16	
Two way Left Turn Lane						
Headway Factor	1.00	1.00	1.00	1.00	1.00	1.00
Turning Speed (mph)	15			9	15	9
Sign Control		Free	Free		Yield	

Intersection Summary			
Area Type:	Other		
Control Type: Unsignalized			
Intersection Capacity Utilization 36.3%		ICU Level of Service A	
Analysis Period (min) 15			

DocuSign Envelope ID: 5C03745C-4B01-4834-A65D-B77F558A4F46

Lane Group	EBT	EBR	WBL	WBT	NEL	NER
Lane Configurations						
Traffic Volume (vph)	0	0	1	360	0	0
Future Volume (vph)	0	0	1	360	0	0
Ideal Flow (vphpl)	1900	1900	1900	1900	1900	1900
Lane Util. Factor	1.00	1.00	1.00	1.00	1.00	1.00
Frt						
Flt Protected						
Satd. Flow (prot)	0	0	0	1809	0	0
Flt Permitted						
Satd. Flow (perm)	0	0	0	1809	0	0
Link Speed (mph)	35			35	35	
Link Distance (ft)	100			205	150	
Travel Time (s)	1.9			4.0	2.9	
Peak Hour Factor	0.90	0.90	0.90	0.90	0.90	0.90
Heavy Vehicles (%)	2%	2%	12%	5%	2%	2%
Adj. Flow (vph)	0	0	1	400	0	0
Shared Lane Traffic (%)						
Lane Group Flow (vph)	0	0	0	401	0	0
Enter Blocked Intersection	No	No	No	No	No	No
Lane Alignment	Left	Right	Left	Left	Left	Right
Median Width(ft)	0			0	0	
Link Offset(ft)	0			0	0	
Crosswalk Width(ft)	16			16	16	
Two way Left Turn Lane						
Headway Factor	1.00	1.00	1.00	1.00	1.00	1.00
Turning Speed (mph)		9	15		15	9
Sign Control	Free			Free	Free	

Intersection Summary			
Area Type:	Other		
Control Type: Unsignalized			
Intersection Capacity Utilization 34.2%		ICU Level of Service A	
Analysis Period (min) 15			

DocuSign Envelope ID: 5C03745C-4B01-4834-A65D-B77F558A4F46



Lane Group	NBT	NBR	SBL	SBT	NWL	NWR
Lane Configurations						
Traffic Volume (vph)	0	0	1	435	0	0
Future Volume (vph)	0	0	1	435	0	0
Ideal Flow (vphpl)	1900	1900	1900	1900	1900	1900
Lane Util. Factor	1.00	1.00	1.00	1.00	1.00	1.00
Frt						
Flt Protected						
Satd. Flow (prot)	0	0	0	1863	0	0
Flt Permitted						
Satd. Flow (perm)	0	0	0	1863	0	0
Link Speed (mph)	35			35	35	
Link Distance (ft)	307			1240	313	
Travel Time (s)	6.0			24.2	6.1	
Peak Hour Factor	0.90	0.90	0.90	0.90	0.90	0.90
Adj. Flow (vph)	0	0	1	483	0	0
Shared Lane Traffic (%)						
Lane Group Flow (vph)	0	0	0	484	0	0
Enter Blocked Intersection	No	No	No	No	No	No
Lane Alignment	Left	Right	Left	Left	Left	Right
Median Width(ft)	0			0	0	
Link Offset(ft)	0			0	0	
Crosswalk Width(ft)	16			16	16	
Two way Left Turn Lane						
Headway Factor	1.00	1.00	1.00	1.00	1.00	1.00
Turning Speed (mph)		9	15		15	9
Sign Control	Stop			Free	Stop	

Intersection Summary			
Area Type:	Other		
Control Type: Unsignalized			
Intersection Capacity Utilization 36.3%		ICU Level of Service A	
Analysis Period (min) 15			

DocuSign Envelope ID: 5C03745C-4B01-4834-A65D-B77F558A4F46

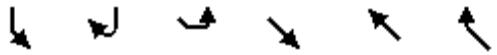

Lane Group	SBL	SBR	SEL	SET	NWT	NWR
Lane Configurations						
Traffic Volume (vph)	1	0	0	459	0	0
Future Volume (vph)	1	0	0	459	0	0
Ideal Flow (vphpl)	1900	1900	1900	1900	1900	1900
Lane Util. Factor	1.00	1.00	1.00	1.00	1.00	1.00
Frt						
Flt Protected	0.950					
Satd. Flow (prot)	1612	0	0	1696	0	0
Flt Permitted	0.950					
Satd. Flow (perm)	1612	0	0	1696	0	0
Link Speed (mph)	35			35	35	
Link Distance (ft)	150			290	741	
Travel Time (s)	2.9			5.6	14.4	
Peak Hour Factor	0.90	0.90	0.90	0.90	0.90	0.90
Heavy Vehicles (%)	12%	2%	2%	12%	2%	2%
Adj. Flow (vph)	1	0	0	510	0	0
Shared Lane Traffic (%)						
Lane Group Flow (vph)	1	0	0	510	0	0
Enter Blocked Intersection	No	No	No	No	No	No
Lane Alignment	Left	Right	Left	Left	Left	Right
Median Width(ft)	12			0	0	
Link Offset(ft)	0			0	0	
Crosswalk Width(ft)	16			16	16	
Two way Left Turn Lane						
Headway Factor	1.00	1.00	1.00	1.00	1.00	1.00
Turning Speed (mph)	15	9	15			9
Sign Control	Yield			Free	Stop	

Intersection Summary			
Area Type:	Other		
Control Type: Unsignalized			
Intersection Capacity Utilization 34.2%		ICU Level of Service A	
Analysis Period (min) 15			

MPDG FFY 2023 and 2024
GRANT APPLICATION
AUGUST 2023

GROUND TO SKY PROJECT

N.C. Department of Transportation
1 South Wilmington Street
Raleigh, NC 27601

ncdot.gov

STAY CONNECTED

/ncdot @ncdotcom @ncdot NCDOTcommunications