2013 SUPERPAVE

Hot Mix Asphalt Quality Management System

STATE OF NORTH CAROLINA DEPARTMENT OF TRANSPORTATION

MATERIALS AND TESTS UNIT
HMA/QMS

PREFACE

This manual has been prepared as a practical guide for asphalt technicians in the construction and inspection of asphalt pavements. It is intended to serve as a basic introduction to asphalt construction for the new technician as well as a reference source to those with considerable experience. While it is fully recognized that this manual alone cannot make a person a totally competent asphalt technician, it should provide the basic knowledge and direction for one truly interested in becoming qualified, to do so.

The terms “technician”, “inspector” and “contractor” are used throughout the manual. Generally, when reference is made to the technician, both the Contractor's representative and the agency's (NCDOT) representative are implied. Where reference is made to either the “inspector” or the “contractor”, then either the agency's (NCDOT) or the contractor's representative, respectively, are specifically implied. The term “Department Personnel” is utilized throughout this manual. Historically, all construction inspection has been performed by NCDOT technicians, however, due to increasing work load and a decreasing number of construction technicians, the Department is utilizing private engineer consulting firms to perform a portion of the construction inspection. Therefore, when reference is made to “Department Personnel”, this refers to either an individual working for the NCDOT or an appointed representative of the Department.

The requirements stated herein may be revised or amended from time to time by Supplemental Specifications, by Standard Special Provisions which are unique to a select group of projects or by Project Special Provisions which are unique to the specific bid proposal or contract.

In this manual only masculine pronouns are used in reference to Technicians, Inspectors and Contractors. This convention is used for the sake of brevity and is intended to refer to persons of either sex and corporate entities.

North Carolina Department of Transportation
Materials and Tests Website

http://www.ncdot.org/doh/operations/materials/

ACKNOWLEDGEMENTS

The North Carolina Department of Transportation would like to express appreciation to the Asphalt Institute for their permission to use quotations, graphs, illustrations and other literature in the preparation of this manual.

Appreciation is also expressed to Astec, Blaw-Knox, CMI, Caterpillar, Compaction America, Dynapac, Gencor, Ingersoll-Rand, Wirtgen, and other equipment manufacturers for the use of their illustrations and information. Use of specific trade names or manufacturers' illustrations does not imply endorsement by the Department. These are used solely because they are considered necessary in meeting the objective of this manual.

The Department also expresses appreciation to the Florida Department of Transportation, the Virginia Department of Highways and Transportation, the Carolina Asphalt Pavement Association, the Federal Highway Administration, the Transportation Research Board, and others for the use of their materials in the preparation of this manual.

MISSION STATEMENT

HMA/QMS Program

The Mission of
The HMA/QMS Program is to continuously improve
the overall quality of Asphalt Pavements
in a cost-effective manner through
Quality Control and Quality Assurance Processes.

TABLE OF CONTENTS

SECTION 1: QUALITY MANAGEMENT SYSTEM (QMS) FOR ASPHALT PAVEMENTS

	PAGE NO.
General	1-1
Contractor's Quality Control Plan	1-2
Asphalt QMS Technician Qualifications and Certification	1-2
General	1-2
Purpose of Inspection and Testing	1-3
DOT Technician's Authority	1-3
DOT Technician's Relationship with Contractor	1-3
Qualifications of QC and QA Technicians	1-4
QMS Technician Requirements	1-5
NCDOT Asphalt Technician Certification Program	1-6
NCDOT Asphalt Technician Certification - Enrollment Procedures	1-11
NCDOT Superpave Certification Flowchart	1-12
HMA Laboratory Technician Assessment Program	1-13

SECTION 2: MATERIALS USED IN ASPHALT PAVING

General Description of Asphalt Paving Materials / Pavements	2-1
Technician Responsibilities	2-1
Asphalt Materials	2-2
Asphalt Cement - Introduction	2-2
Refining Crude Petroleum	2-2
Classification and Grading of Paving Grade Asphalts	2-2
Asphalt Binders	2-3
Emulsified Asphalts	2-4
Cutback Asphalts	2-4
Characteristics of Asphalt Binder	2-5
Testing the Properties of Performance Graded Asphalt Binders	2-6
Specific Gravity of Asphalt Binder	2-6
Asphalt Additives	2-6
Asphalt Binder Storage	2-7
Delivery and Acceptance of Asphalt Materials	2-7
NCDOT Specifications for Asphalts (Table 2-1)	2-9
Emulsified Asphalts (Table 2-2)	2-10
Temperature -Volume Relationship of Asphalts	2-10
Multipliers for Correcting Asphalt Volumes to 60°F/15.6°C (Table 2-4)	2-11
Mineral Aggregates	2-12
Introduction	2-12
Sources of Aggregates	2-12
Natural Aggregates	2-12
Processed Aggregates	2-12
Synthetic or Artificial Aggregates	2-12
Recycled Aggregates	2-12
Evaluating the Quality of Aggregates	2-13
Aggregate Gradation	2-13
Source Properties	2-13
Consensus Properties	2-14
Aggregate Consensus Properties (Table 1012-1)	2-15
Aggregate Gradation Table 1005-1 (Coarse Aggregate)	2-16

SECTION 3: ASPHALT PAVEMENT DESIGN

	PAGE NO.
Designing an Asphalt Pavement Structure (Thickness)	3-1
Superpave Asphalt Mix Types	3-3
Pavement Layer Depth Guidelines (For Pavement Design Purposes)	3-4
Superpave Application Rates of Spread per Inch Depth	3-4
Typical Superpave Single Layer Depths	3-5
Typical Asphalt Binder Contents	3-5
Example Roadway Typical Section	3-6

SECTION 4: HOT MIX ASPHALT DESIGN AND JOB MIX FORMULAS

Introduction	4-1
Purposes of Mix Designs	4-1
Performance Characteristics Considered in Mix Design	4-2
Permanent Deformation (Rut Resistance)	4-2
Durability	4-2
Flexibility	4-3
Fatigue (Cracking) Resistance	4-3
Skid Resistance	4-3
Impermeability	4-4
Low Temperature/Shrinkage Cracking	4-4
Workability	4-4
Economics	4-4
The Superpave Mix Design System	4-4
Aggregate Properties and Gradation Requirements	4-5
Asphalt Binder Grade Selection and Requirements	4-5
Mixture Volumetric Properties and Requirements	4-6
Dust to Effective Binder Ratio	4-6
Moisture Susceptibility	4-7
Permanent Deformation (Rut Resistance)	4-7
NCDOT Mix Design Procedures	4-9
The Job Mix Formula	4-10
Superpave Aggregate Gradation Design Criteria (Table 610-2)	4-12
Superpave Mix Design Criteria (Table 610-3)	4-12
Superpave Virgin Asphalt Grades Used for Various %'s of Rap (Table 610-4)	4-13
NCDOT "Master" Job Mix Formula Procedures	4-13
Composition of Recycled Mixtures (JMF)	4-14
Project File Job Mix Formula Procedures	4-15
Job Mix Formula Numbering System	4-17
Superpave Mix Type Designations	4-18
Superpave JMF Example	4-19
Asphalt Mix Design and Testing Calculation / Formulas	4-20 thru 4-22

SECTION 5: ASPHALT PLANT EQUIPMENT AND REQUIREMENTS

	PAGE NO.
Basic Operation of an Asphalt Plant	5-1
Types of Asphalt Plants	5-1
Certification of Asphalt Plants	5-1
Asphalt Plant Specification Checklist	5-4
Batch Plant Operations and Components	5-6
Drum-Mix Plant Operations and Components	5-8

SECTION 5: ASPHALT PLANT EQUIPMENT AND REQUIREMENTS (CONT.)

	PAGE NO.
Introduction of Anti-Strip Additive for Plant Mix (Batch or Drum)	5-9
Introduction of Anti-Strip Additive at Binder Supplier's Terminal	5-10
Warm Mix Asphalt (WMA) Technologies	5-10
Dept. of Agriculture & Consumer Services (NCDA & CS) Scales Certification	5-11

SECTION 6: ASPHALT PLANT OPERATIONS

General Requirements	6-1
Asphalt Binder Storage and Handling	6-1
Asphalt Mix Temperature Requirements	6-2
Aggregate Storage	6-2
Aggregate Cold Feed System	6-3
Calibration of Cold Feed Blend Ratios	6-5
Batch Plant Operations	6-9
The Dryer	6-9
Screening Unit	6-10
Hot Bins	6-11
Aggregate Weigh Hopper	6-12
Asphalt Binder Bucket or Meter	6-12
The Mixer Unit (Pugmill)	6-12
Automatic Control of Proportioning & Mixing	6-13
Calibration of Batch Plant Asphalt Scales, Weigh Bridges & Meters	6-14
Aggregate Scales & Weigh Bridges	6-14
Asphalt Binder Scales	6-14
Asphalt Binder Meters	6-15
Anti-Strip Meter System	6-15
Documentation	6-16
Setting of Batch Weights	6-16
Hot Bin Sampling	6-17
Sieve Analysis of each Bin	6-18
Determining Hot Bin Percentages	6-18
Calculating Batch Weights	6-22
Setting the Batch Weights	6-22
Drum Mix Plant Operations	6-26
Cold Feed System	6-26
Vibratory Scalping Screen	6-26
Weight Measurement of Aggregate and RAP / RAS	6-27
Asphalt Binder Meter System	6-29
Anti-Strip Additive Meter System	6-32
Documentation	6-32
Drum-Mixer Dryer	6-32
Surge Storage Bins (Silos)	6-32
Segregation of Asphalt Mixtures	6-33
Scales and Public Weighmaster	6-34
Weight Certificates-General	6-34

SECTION 6: ASPHALT PLANT OPERATIONS (CONT.)

	PAGE NO.
Hauling of Asphalt Mixtures	6-35
Pollution Control Equipment	6-37
Safety Requirements	6-37
Production Consistency and Automatic Equipment	6-37

SECTION 7: PLANT MIX SAMPLING AND TESTING

Introduction - Sampling and Testing	7-1
QMS Certified Field Laboratory	7-2
QC Lab Required Equipment List for Superpave Testing	7-3
QMS Lab Equipment Calibration Requirements	7-5
QMS Plant Sampling Schedule	7-9
Quality Control (QC) Minimum Sampling and Testing Schedule	7-10
Sample Location for Mix	7-12
Sample Location for Aggregates, RAP, & RAS	7-17
Mix Verification, JMF Adjustments and Corrective Action Procedures	7-18
Mix Verification Requirements	7-18
Allowable Mix Adjustments	7-20
Control Charts	7-21
Control Limits	7-22
Corrective Actions	7-22
Individual Test Exceeding Individual Test Limits	7-22
Moving Average Exceeding Moving Average Limits	7-23
HMA Quality Control Chart Example	7-25
Sampling Procedures	7-26
Aggregate, RAP & RAS Sampling	7-26
Numbering of Mix Samples	7-27
Sampling Mix from Truck	7-27
Sampling Device	7-27
Sample Location in Truck	7-27
Obtaining Mix Samples (Full & Partial Test Series)	7-28
QC Quartering of Mix Samples	7-29
QC Quartering (RAP or RAS Samples)	7-29
QA Quartering of Mix Samples	7-30
QA Quartering (Aggregates, RAP and RAS)	7-30
Test Procedures – General	7-31
Sieve Analysis of Fine and Coarse Aggregates	7-32
Moisture Content of Aggregate by Drying	7-36
Sieve Analysis of Recovered Aggregate	7-38
Determining the Asphalt Binder Content of HMA by the Ignition Method	7-41
Superpave Gyratory Compactor Field Test Procedure	7-47
Maximum Specific Gravity (G_{mm}) of Asphalt Paving Mixtures	7-51
(1) Theoretical Maximum Specific Gravity (Bowl or Flask)	7-52
(2) Theoretical Maximum Specific Gravity (Vacuum Sealing Method)	7-55
Bulk Specific Gravity of Compacted Asphalt Mixtures	7-58
(1) Bulk Specific Gravity using Saturated Surface-Dry Specimens	7-58
(2) Bulk Specific Gravity using Automatic Vacuum Sealing Method	7-60
Tensile Strength Ratio (TSR) Test	7-63

SECTION 7: PLANT MIX SAMPLING AND TESTING (CONT.)

	PAGE NO.
Determination of Draindown Characteristics in Uncompacted Asphalt Mixtures	7-70
QMS Field Calculations	7-73
Significant Decimals	7-73
Calculating Voids in Total Mix (VTM)	7-74
Calculating Aggregate Effective Specific Gravity	7-74
Calculating Voids in Mineral Aggregate (VMA)	7-75
Calculating Voids Filled with Asphalt (VFA)	7-76
Calculating Dust to Binder Ratio	7-76
Calculating G_{mm} @ N_{ini}	7-77
Allowable Resampling and Retesting for Mix Deficiencies	7-78
Guidelines for Retests of Plant Mix Deficiencies	7-78
Retest Procedures	7-79
Quality Assurance Sampling and Testing	7-80
Verification Sampling and Testing Guidelines for Plant Mix	7-82
Dispute Resolution Testing Guidelines for Plant Mix	7-83
Acceptance Based on Mix Testing	7-84

SECTION 8: RECYCLING OF ASPHALT PAVEMENTS

Hot Mix Recycling	8-1
Hot-Mix Recycling Methods	8-1
Composition of Recycled Hot Mix Asphalt (Mix Design & JMF)	8-2
Table 610-4 Virgin Asphalt Grades For Various %'s of RAP	8-3
Plant Calculations and Control For Recycled Mixes	8-4
Quality Control, Handling & Processing of RAP/RAS Materials	8-5
Table 1012-4, New Source RAP Gradation and Binder Tolerances	8-6
Table 1012-2, New Source RAS Binder and Gradation Tolerances	8-7
Compensation for Recycled Mixes	8-7
Milling of Asphalt Pavements	8-8

SECTION 9: ASPHALT PAVING OPERATIONS

Introduction	9-1
The Asphalt Distributor	9-2
Asphalt Delivery Tickets for Emulsified Asphalts	9-3
Prime Coats	9-4
Grades, Application Rates and Temperatures for Prime Coats	9-5
Application of Prime Coat	9-6
Determination of Prime Coat Rates and Pay Quantities	9-7
Tack Coats	9-9
Tack Coat Grades	9-9
Application Rates and Temperatures	9-10
Application of Tack Coat	9-11
Determination of Tack Coat Rate	9-12
Hot Mix Placing and Compaction Operations – General	9-14
Introduction	9-14
Planning Paving Operations	9-14
Weather, Temperature, and Seasonal Limitations	9-15

SECTION 9: ASPHALT PAVING EQUIPMENT (CONT.)

	PAGE NO.
Spreading and Finishing of Asphalt Pavements	9-16
Spreading and Finishing Equipment	9-16
Incidental Tools	9-17
Asphalt Distributor	9-17
Haul Trucks	9-17
The Asphalt Paver	9-18
Material Transfer Vehicle (MTV)	9-22
Coordinating Plant Production and Paver Speed	9-23
The Placing Operation	9-24
The Spreading Operation	9-25
Fundamentals of Screed Operation	9-27
Shoulder Wedge	9-29
Use of Automatic Screed Controls	9-29
Handwork	9-33
Compaction of Asphalt Pavements – General	9-34
The Need for Compaction	9-34
Compaction Specifications	9-34
Asphalt Roller Types	9-36
Steel Wheel Rollers	9-36
Pneumatic-Tired Rollers	9-37
Vibratory Rollers	9-38
Compaction Equipment Inspection	9-39
Rolling and Compaction Procedures	9-39
Factors Affecting Compaction	9-42
Mix Properties	9-42
Environmental Effects	9-45
Layer Thickness	9-46
Subgrade and Bases	9-46
Compaction Equipment and Procedures	9-46
Three Phases of Rolling	9-46
Breakdown Rolling	9-46
Intermediate Rolling	9-47
Finishing Rolling	9-47
Roller Patterns	9-48
Constructing Transverse Joints	9-49
Transverse Joint Specifications	9-49
Construction Procedures	9-50
Constructing Longitudinal Joints	9-52
Longitudinal Joint Specifications	9-52
Location of Longitudinal Joints	9-52
Construction Procedures	9-53
Significant Decimals for Roadway Calculations	9-56

SECTION 10: ROADWAY PAVING OPERATIONS

	PAGE NO.
Roadway Inspection and Testing of Asphalt Pavements – General	10-1
Inspection - General	10-1
QA/QC Technician's Checklist for Roadway Operations	10-1
Required Information for Asphalt Weight Certificates	10-4
Visual Inspection of the Mix (Plant and Roadway)	10-5
Identifying Mat Problems, Causes and Cures	10-6
Determination of Rate of Spread and Tonnage Required	10-7
Temperature of the Mix at Roadway	10-9
Segregation of Mixes on the Roadway	10-9
Checking the Mat Cross-Slope and Thickness	10-11
Surface Texture	10-11
Limited Production Policy for Unsatisfactory Laydown	10-12
Pavement Density QMS Testing Procedures - General	10-13
Density Testing Methods	10-13
Minimum Density Requirements	10-14
Determination of “Lots”	10-14
Density Control Sampling and Testing Frequencies	10-17
Procedures for Placing and Obtaining Core Samples - General	10-19
Determining Random Sample Locations - General	10-20
Density Gauge Quality Control	10-31
Density Gauge QC Procedures - General	10-31
Location of QC Density Gauge Control Strips	10-31
Frequency of QC Density Gauge Control Strips	10-31
Numbering of Density Gauge Control Strips	10-32
Construction of Density Gauge Control Strips (QC Procedures)	10-32
Core Samples from Density Gauge Control Strips	10-33
Determination of QC Density Gauge Control Strip Target Density	10-33
Establishment of QC Density Gauge Test Sections	10-38
Testing a QC Density Gauge Test Section	10-38
Procedures for Re-Testing a QC Density Gauge Test Section	10-40
Numbering QC Density Gauge Test Sections	10-42
Reporting QC Density Gauge Test Sections (M&T 516 QC)	10-42
Density Gauge Quality Assurance (QA)	10-44
General	10-44
(QA) Density Gauge Control Strip Procedures	10-45
(QA) Density Gauge Test Section Procedures (Comparison/Re-Test)	10-46
(QA) Nuclear Test Section Procedures (Verification)	10-46
Core Sample Density Quality Control (QC)	10-49
Core Sample Density Control - General	10-49
Core Sample QC Control Strip Requirements and Procedures	10-49
Numbering of Core Sample Control Strips and Core Samples	10-49
Construction of Core Sample Control Strips (QC Procedures)	10-50
Determination of Quality Control Core Sample Control Strip Density	10-52
Establishment of QC Core Sample Test Sections	10-52
Random Sample Locations for QC Core Sample Density Testing	10-53
Testing a Core Sample Test Section (QC)	10-57
Numbering Quality Control (QC) Core Samples	10-57
Checking QC Core Samples	10-58
Numbering Quality Control (QC) Check Core Samples	10-59
Reporting Core Sample Control (QC) Test Sections (Form QC-5 Rev.)	10-59

SECTION 10: ROADWAY PAVING OPERATIONS (CONT.)

	PAGE NO.
Core Sample Density Quality Assurance (QA)	10-61
Quality Assurance (QA) Test Section Procedures (Comparison)	10-62
Quality Assurance (QA) Test Section Procedures (Verification)	10-62
Acceptance of Density (Density Gauge and/or Core Sample Control)	10-63
Limited Production Procedures Gauge & Core Sample Density Control Failures	10-66
Independent Assurance (IA) Sampling and Testing for Density Control	10-67
Nuclear Density Correlation Program	10-67
Conventional Density Correlation Program	10-68

SECTION 11: PAVEMENT SMOOTHNESS / RIDEABILITY

Pavement Smoothness	11-1
Profile Testing	11-2
Details on the Inertial Profiler (Option 1)	11-2
Final Surface Testing Standard Specification (Option 1)	11-3
MRI Price Adjustments (Table 610-7)	11-5
Hearne Final Surface Testing Standard Specification (Option 2)	11-2 & 11-6
Hearne Pay Adjustment Schedule (Table 610-8)	11-7
Calibration of Hearne Straightedge	11-8
Determination of the Cumulative Straightedge Index	11-9
Hearne Straightedge Summary (QA/QC-7 Form)	11-16

SECTION 12: RECORDS AND REPORTS

General Information	12-1
Records and Report Documentation	12-2
Retention of QMS Forms	12-2
Falsification of Records	12-3
Forms and Instructions	12-4
Summary of All QMS Forms and Instructions	12-5
QMS Forms with Detailed Instructions	12-6 thru 12-107

APPENDIX

Definitions of Asphalt Pavement Terminology	A-1
Deficiencies in Hot Mix Asphalt Chart	A-7
Binder Content Diagnostic Chart	A-8
Mat Problem Trouble-Shooting Guide	A-10
Segregation Diagnostic Chart	A-11

SECTION 1

QUALITY MANAGEMENT SYSTEM (QMS) FOR ASPHALT PAVEMENTS

1.1 GENERAL

Section 609 of the NCDOT Standard Specifications and all applicable Project or Standard Special Provisions provide for Quality Control and Quality Assurance of asphalt pavements by use of a Quality Management System (QMS). The basic concept of this process is that the Contractor performs adequate testing and inspection to insure a quality asphalt pavement and the Department performs adequate testing and inspection to insure that the Contractor's results are accurate. This system requires both the Department and the Contractor to have technicians that are competent in production, construction, testing, and inspection of asphalt pavements. The general idea is for the Contractor to perform the necessary tests and inspection to insure the likelihood that all mix meets the Specifications instead of "after-the-fact" testing to see if it does meet the Specifications. This approach gives the Contractor much more control over his total operations. He is responsible for his product from the design of the mix to the final acceptance of the pavement. The Department simply monitors his process to be sure that what he is doing is adequate and accurate; and, then performs independent testing to verify the quality of the end product.

The Contractor's responsibility under the QMS process is referred to as Quality Control (QC). The Department's responsibility under the QMS process is referred to as Quality Assurance (QA). The Contractor is responsible to provide competent personnel to perform his quality control and the Department is responsible to provide competent personnel to perform their quality assurance. The requirements and details of certification for these personnel to perform the QC/QA work is given in Section 1.3.6 and 1.3.7 of this manual.

The requirements for the Contractor's QC sampling and testing are contained in Section 609 of the Specifications and Section 7 of this Manual. The frequency of these activities may vary with the process and the materials. When test results vary from the design and/or specifications, changes to the process shall be made. The frequency of the appropriate QC activities shall be increased until the proper conditions have been restored. The Department's minimum frequency requirement for QA sampling and testing is specified in Section 609-6 of the Standard Specifications and is covered in detail later in this manual.

The Contractor may utilize innovative equipment or techniques not addressed by the specifications or these provisions to produce or monitor the production of the mix, subject to approval by the Department's Asphalt Design Engineer.

QMS is a total process that encompasses the Contractor's mix design, the QC testing and inspection, and the Department's quality assurance and acceptance of the Contractor's process and procedures. Each of these aspects of the total process will be addressed in detail later in this manual. While all of these are very important, the real success of this program is that the Contractor and the Department carry out every aspect of the process such that a quality asphalt pavement is the final product.

1.2 CONTRACTOR'S QUALITY CONTROL PLAN

The Contractor will not be required to submit a written quality control plan to the Department; however, the Contractor, at a minimum, shall perform all quality control activities required by the specifications as well as accepted asphalt industry quality control practices and procedures.

1.3 ASPHALT QMS TECHNICIAN QUALIFICATIONS AND CERTIFICATIONS

1.3.1 General

The technician's role is extremely vital in every road construction project, especially in asphalt construction. He has the job of ensuring that the pavement design as described in the plans and specifications produces a strong, durable, and reliable pavement on the roadway. The technician's job is one that demands knowledge, awareness, keen observational skills, and diplomacy. It is among the toughest jobs in the construction industry.

Most road and highway construction in North Carolina is performed under contract. One party (the Contractor) agrees to perform certain work that meets specified standards. In return for this work, the Contractor is paid by the other contractual party (the owner) who is often a local, state or federal government agency. The contract between Contractor and owner includes plans and specifications that must be followed during pavement construction and be met by the finished product. Whether or not these requirements are fulfilled determines the quality level of the finished pavement and how well the pavement will serve the public.

Because asphalt pavement construction is often complex, plans and specifications are often detailed and lengthy. Ensuring that the plans are followed precisely demands the owner and the Contractor have an agent acting as their eyes and ears, and who is on-hand throughout the construction process. That agent is the asphalt technician. It is the technician's duty to see that construction operations produce the results called for by the plans and specifications. In this capacity, both the DOT's technician and the Contractor's technician have certain areas of responsibility to identify deviations from project specifications and to see that they are corrected immediately. In any case, neither technician has the authority to change or modify the contract or specifications.

Knowledge is the path every technician must follow to improve his performance and capability. Whether a technician is new to the job or seasoned, his learning never stops. New developments that affect his job are constantly appearing. Additionally, every technician needs to refresh his knowledge periodically and to brush up on procedures that are used infrequently. This manual is a good source of refresher information, as well as a basic text for training the new asphalt technician.

A manual alone, however, is not enough. It must be used in conjunction with other learning tools. The most effective learning tool is on-the-job training. The job site is where things are happening that a technician must know. It is the ideal place to observe, to ask questions, to get answers. On the job, the new technician develops inspection skills first-hand and discovers what occurs during hot mix asphalt construction and why certain methods achieve certain results. Combined with this course of instruction, on-the-job training provides the technician with the necessary tools to carry out his duties and responsibilities.

1.3.2 Purpose of Inspection and Testing

The purpose of inspecting and testing asphalt construction is to ensure the quality of the work meets project requirements and specifications. To accomplish this, the asphalt technician must be familiar with the parts of the construction contract that apply to his job.

The contract is the agreement between the owner or contracting agency and the Contractor. It states the obligations of both parties, including labor, materials, performance and payment. While there are many documents that make up the construction contract, the technician is concerned primarily with the plans and specifications. Together, plans and specifications explain requirements that the Contractor must fulfill to build a satisfactory pavement and get paid in full for his work.

Plans are the contract documents that show the location, physical aspects, details and dimensions of the work. The plans include layouts, profiles, cross-sections and other details.

Specifications are the written technical directions and requirements for the work; also, the standard specifications and the special provisions complement the plans by providing instructions that are not specifically indicated on the drawings. Specifications are the means of communication among the designer, the Contractor, and the technician. Specifications include Standard Special Provisions and Project Special Provisions, which simply are revisions to the specifications.

1.3.3 DOT Technician's Authority

The Division Engineer or project Resident Engineer assigns the DOT's technicians, and their authority is stated in the Standard Specifications under Duties and Authority of the Inspector (Article 105-10). The Technician assists the Engineer in determining that the work done and the materials used meet contract requirements. The Technician has the authority to reject defective materials and to advise the Contractor that payment will be withheld for work that is being done improperly. The Engineer may delegate additional authority to him; however, the Technician is not authorized to make any final acceptance of the work. The technician is generally responsible to ensure that the contractor is utilizing good construction practices in order to deliver a satisfactory product at a reasonable cost.

1.3.4 DOT Technician's Relationship with Contractor

It is required by the Specifications that a preconstruction conference be held between the inspection and engineering personnel of the owner and the Contractor's supervisory personnel. At such a meeting the plans and specifications are reviewed, material deliveries and construction techniques discussed, traffic control procedures agreed upon, specific project responsibilities and lines of authority defined, and any other necessary items that may have a bearing on the project are discussed.

One of the most important aspects of the technician's job is his relationship with the Contractor. This relationship affects the management of the project. A good personal rapport assists the Technician in resolving problems that might arise. When dealing with the Contractor and his personnel, the Technician should be friendly, but he must be firm and impartial in making decisions. If the Technician experiences difficulties with the Contractor, he should immediately inform the Engineer.

The Technician will assist himself, as well as the Contractor, by trying to understand the project from the Contractor's point of view. The Technician is primarily interested in quality (how good the pavement is); the Contractor is primarily interested in quantity (how much pavement is placed in a given time). Under no condition should the Technician permit a reduction in quality in the interests of quantity. However, as long as pavement quality is maintained, the Technician should assist the Contractor's efforts to place hot mix asphalt as efficiently as practical and within specifications.

The Technician has the obligation to influence the construction process so that the best possible roadway is constructed. He cannot simply take a passive role when observing a problem. He must be willing to help solve it. For example, after observing a particular situation, the Technician may be able to suggest a change in procedures that could improve the quality of the work while increasing the efficiency of the operation. Such a suggestion benefits both the Contractor and the Department of Transportation.

When offering assistance in solving problems, however, the Technician must be careful to avoid involving himself in the supervision of construction. He should avoid giving the impression that he wants to control the work, and he must never issue an order to the Contractor's workers. Assuming supervision of the work puts the Technician in the undesirable position of judging the quality of work by means that he dictated.

1.3.5 Qualifications of QC and QA Technicians

The personal attributes required of a technician go beyond those expected of an ordinary workman. The technician must be honest. He must conduct himself in a fair and straightforward manner. While under stress, he must be able to maintain his composure and make good decisions. He must have keen common sense for making competent decisions. He must be frank and sincere in his relationships with people and must be a skilled diplomat, able to handle tough situations without arousing hostility. Above all, he must be observant and be capable of keeping good records.

Some technical study and construction experience is helpful. As a minimum, however, the technician must be able to perform accurate mathematical calculations and should be familiar with the fundamentals of engineering equations. It is essential that he knows how to read and understand plans, specifications and other contract documents in order to understand requirements of the work.

Although not responsible for the design of roadways, the technician should understand the basic engineering principles involved. He should be familiar with the characteristics of materials and know the principles of material testing, including the interpretation of test results.

The technician must have specialized knowledge pertaining to his particular job. For example, a plant technician must have a thorough working knowledge of asphalt plants, but he must also have a broad general knowledge of asphalt materials, production, and construction procedures. Practical experience with asphalt mix production, roadway construction, and asphalt laboratory testing is a valuable asset.

If all the qualifications of a technician could be reduced to four, they would be: (1) knowledge, (2) common sense, (3) observational skills, and (4) courtesy. The basic summary of each is presented below.

(1) Knowledge--The technician must know about the work that he is inspecting. He should be familiar with materials, equipment and hot mix asphalt pavement construction procedures. The more knowledgeable a technician is, the better prepared he is to perform his duties.

(2) Common Sense--A good technician must have abundant common sense. While common sense is no substitute for knowledge, it is the means of interpreting the specifications to properly enforce their intent. Common sense grows out of knowledge, but it cannot be learned out of a book.

(3) Observational Skills--A technician can act only on what he observes. What is not seen is missed. Thus, it is important not only for a technician to look carefully at everything going on around him, but also to see what he looks at. "Seeing" in this context means thinking carefully about what the eyes observe. Without seeing, a technician can observe an incorrect condition and not realize it.

(4) Courtesy--A major part of the technician's job is to inform others when unsatisfactory conditions exist or when the specifications are not being met. Both parties expect valid criticism and objections from the other, yet the manner of presenting comments can often become the source of poor relations between Contractor and technician. Experience shows that it is not what is said, so much as the way it is said that is important. Gruff, bossy and sarcastic comments are unacceptable from any technician, even if given in answer to aggravating remarks from others.

Once Contractor-DOT relations deteriorate, the work suffers. Since the technician's primary concern is to preserve the quality of the work, he should show common courtesy at all times, even when tempted not to do so.

Although desired qualities for prospective technicians can be listed, the bottom line is this: To do a professional job, the technician must want to do a good job, know how to do it, and go about it in a manner that contributes favorably to the project.

1.3.6 QMS Technician Requirements

On Quality Management System projects, all asphalt plant mix testing technicians (both Contractor & DOT) are required to be certified through the Department's current Asphalt Technician Certification Program. All plant technicians (both Contractor and DOT) must be certified as Superpave plant technicians. Certified QMS Level I Plant Technicians are testing personnel and are required to be at the plant site at all times during production of material for the project. A plant operator who is a certified Asphalt Plant Technician Level I may be utilized to meet this requirement when daily production for each mix design is less than 100 tons (100 metric tons) provided the randomly scheduled increment sample as defined in Sub-article 609-5(C)2 is not within that tonnage. When performing in this capacity, the plant operator will be responsible for all quality control activities which are necessary and required. Absences of the Level I Technician, other than those for normal breaks and emergencies must be pre-approved in writing by the appropriate QA Supervisor or his designated representative(s). Any extended absence of the Technician that has not been approved will result in immediate suspension of production by the Engineer. All mix produced during an unexcused absence of the Level I technician will be accepted in accordance with Article 105-3 of the Specifications. The Contractor is also required to have readily available (on-call) a QMS Level II Plant Technician responsible for making process control adjustments and solving mix problems. He must be located such as to be able to respond to all plant mix problems in a timely manner. The Department will have at least one certified QMS Level II Plant Technician on its' Quality Assurance (QA) team as well as several Level I Technicians. Either a QC or QA Level II Technician may also function as a Level I Technician, in which case he/she would fulfill the requirements for both the Level I and II technicians.

All Roadway Technicians are required to be certified through the Department's current certification program. The Contractor is required to have at least one certified roadway technician on the project at all times during normal laydown operations. This person is responsible for monitoring all roadway paving operations and all quality control processes and activities, to include stopping production or implementing corrective measures when warranted. The Contractor's technician(s) must meet the same requirements as DOT personnel and will be certified by the same certification program. A certified DOT Roadway Technician will also be on-site at all times during production.

The Department's Certification Program for QMS plant and roadway technicians is managed by the Materials and Tests Unit's Asphalt Laboratory. This section will maintain a listing of all plant and roadway QMS personnel certified by NCDOT. This listing will be maintained in an internal computer database (HiCAMS).

The Asphalt Laboratory may be contacted at (919) 329-4060 for further instructions on how to access this information. This listing may be used to verify certification of personnel working on QMS Superpave projects.

It is required that both DOT and Contractor Density Gauge Operators be certified through the Department's current QMS Density Gauge Technician's Program.

The Department's Certification Program for QMS Density Gauge Technicians is managed by the Soils Engineer of the DOT M&T Unit. The Soils Engineer will maintain a listing of all certified QMS Density Gauge Technicians and may be contacted at (919) 329-4150 for verification of these. This listing will also be maintained in a computer database.

The QMS Specification requires that the Contractor design his own asphalt mixes. He may do so by use of his own personnel or by hiring an approved agency to do it for him. Whichever the case, any technician performing mix designs for use on QMS specification projects must be certified through the Department's current mix design certification program. This certification program is managed by the Asphalt Design Engineer of the Department's Materials and Tests Unit. The Asphalt Design Engineer may be contacted at 919-329-4060 for verification of a technician's mix design certification.

An organizational chart, including names, telephone numbers, and current certification numbers of all the Contractor's personnel responsible for the quality control program shall be posted in the Contractor's laboratory while the asphalt paving work is in progress.

1.3.7 NCDOT Asphalt Technician Certification Program

1. General

The certification of asphalt technicians is a program by which it can be reasonably assured that both the DOT's quality assurance personnel and the Contractor's quality control personnel are knowledgeable and qualified to perform the required sampling, testing and inspection of asphalt mixtures and pavements. Certification will also include a general knowledge of the techniques and equipment used in the construction of asphalt pavements, including asphalt plant operations, placement operations and compaction operations. Under the NCDOT program, a technician may be certified in either mix design techniques, plant operations, roadway operations, density gauge operations, or all of these. Certification in either area will include some overlap into the other area. For example, a certification in plant operations will include a basic knowledge and understanding of roadway procedures, etc. This is required since it can be readily seen that proficiency in one area requires some general knowledge of the overall operation.

The certification program will be operated on a continuing basis. There will be classes and examinations scheduled throughout each year. In addition, there will be a continuous "on-the-job" training

program for Level I plant & roadway technicians. The Asphalt Design Engineer will provide applications for and maintain a master training schedule of all related classes.

Both the applications and schedule may be downloaded from the Materials and Tests Unit's web site located at the following web address:

http://www.ncdot.org/doh/operations/materials/

Enrollment procedures for these training classes are included at the end of this Section. All certifications will generally be effective for four years beginning from the date of passing the certification test and then must be renewed. Details for renewal of certifications are covered later in this section.

2. Types of Certifications

Listed next are the different types of certifications related to asphalt pavements and a basic job description for each. As mentioned previously, a technician may be certified as any one or more of these, or possibly all of these. As noted in the prerequisites listed later, some certifications require a lower level certification before advancement to the next level of certification.

A. QMS Superpave Certifications

1. *QMS Level I Superpave Plant Technician* -	A Technician trained and competent in testing and inspection of Superpave asphalt mix at the plant.
2. *QMS Level II Superpave Plant Technician* -	A Technician trained and competent in making Superpave mix adjustments and solving Superpave asphalt mix problems.
3. *QMS Mix Sampling Technician* -	A Technician trained and competent in sampling of Superpave asphalt mix at the plant.
4. *QMS Roadway Technician* -	A Technician trained and competent in roadway laydown, compaction, and density procedures.
5. *QMS Density Gauge Operator* -	A Technician trained and competent in the use of a density gauge in accordance with the QMS specification.
6. *Superpave Mix Design Technician* -	A Technician trained and competent in the area of Superpave asphalt mix design procedures.

B. QMS Superpave Certification Requirements

The basic requirements for these five types of certifications are listed as follows:

A. QMS Level I Plant Technician

1. Prerequisite(s): Introduction to Asphalt Pavements Course*** with Passing Exam.
2. Training**:**
   - Step 1: Level I Plant Technician OJT Program (See Section 12 of this manual for the QMS-3 checklist with instructions)
   - Step 2: Level I Plant Technician Class with Passing Exam
3. Experience Requirement: Minimum 20 working days per OJT Program *****

B. *QMS Level II Plant Technician*

CURRENT LEVEL I PLANT TECHNICIAN

1. Prerequisite(s): Minimum of 1 year's Experience as Level I Plant Technician
2. Training:
   - Step 1: Approved Superpave Mix Design Course with Passing Exam
   - Step 2: Level II Plant Technician Class with Passing Exam
3. Experience Requirement: One (1) year as Level I Technician **or** Equivalent Experience as Determined by Asphalt Design Engineer.

C. *QMS Mix Sampling Technician*

1. Prerequisite(s): None
2. Training**:**
   - Step 1: Attend I Day Training Class
   - Step 2: Pass Written Exam and Complete Hands on Training

D. *QMS Roadway Technician*

1. Prerequisite(s): Introduction to Asphalt Pavements Course*** with Passing Exam.
2. Training:
   - Step 1: Roadway Technician OJT Program (See Section 12 of this manual for the QMS-5 checklist with instructions)
   - Step 2: Roadway Technician Class with Passing Exam
3. Experience Requirement: Minimum 20 working days per OJT Program ******

***** In lieu of the 20-day minimum training and the minimum requirements in Parts II, III and IV of the OJT Checklist, a current asphalt plant mix testing certification from another State or other approved testing agency may be substituted. In this case, a copy of the certification shall be attached to the back of the OJT checklist. In addition, the OJT technician must perform one repetition of all requirements in Parts II, III, and IV in the presence of a certified plant technician prior to the check off by a final review technician. All other requirements of this OJT checklist shall be completed as specified.

****** In lieu of the 20 days minimum training, either of the following may be substituted: 1) a current roadway paving certification from another state or other approved testing agency, or 2) Certification verifying a minimum of 1 year asphalt roadway paving experience from a supervisor who has direct knowledge of the applicant's roadway paving experience. In either case, the appropriate certification shall be attached to the back of the OJT checklist and included with the class application package. All other requirements of the OJT checklist shall be completed in full as specified, including the Final Review Check off by an Approved Final Review Technician.

******* The Introduction to Asphalt Pavements Course can be found online at:

http://www.ncdot.org/doh/operations/materials/pdf/aspintrocls.pdf

E. *QMS Density Gauge Operator*

1. NCDOT TECHNICIANS
   a. Prerequisite(s): NCDOT Nuclear Safety Training Course
   b. Training: QMS Density Gauge Technician Course with Passing Exam.
   c. Experience Requirement: "Hands-on" QMS training after completion of class.
2. NON - NCDOT TECHNICIANS
   a. Prerequisite(s): Nuclear Safety Training Course
   b. Training: QMS Density Gauge Technician Course with Passing Exam.
   c. Experience Requirement: "Hands-on" training after completion of class.

F. *Superpave Mix Design Technician*

1. Prerequisite(s):
   (a) QMS Level I or II Superpave Technician **OR**
   (b) Completion of the Level I Superpave OJT Program and Enrollment in a Level I Superpave Class **OR**
   (c) Equivalent Experience as Determined by the Asphalt Design Engineer.
   (d) Completed Aggregate Consensus Properties Checklist
2. Training:
   Step 1: Approved Superpave Mix Design Course with passing exam
   Step 2: Checkoff on Aggregate Consensus Property Tests (Contact Local QA Supervisor for Details)
   Step 3: NCDOT Mix Design Certification Class including Passing Exam.

A certificate will be issued for each type certification. Initial certification will generally be effective for four (4) years beginning from the date of passing the appropriate written exam until December 31st of the 4th year. A Mix Sampling Technician Certification has no expiration date. Failure of an exam will require the person to re-attend the regular class and pass the exam to become certified / re-certified. Upon two consecutive failures of the exam, the person will be required to perform the OJT (On-the-Job-Training) prior to re-attending the full class and taking the exam, unless otherwise approved by the Asphalt Design Engineer. Upon satisfactory completion of all requirements, the technician will be issued a certificate.

It should be noted that there is no certification for the Introduction to Asphalt Pavements Course. This is a very basic asphalt course designed to provide general knowledge of both plant and roadway operations to personnel with little or no experience. It is a prerequisite for several other certifications; therefore, a “completion” certificate will be issued to verify satisfactory completion. A written exam will be given at the end of the course and will be used to judge satisfactory completion.

3. Renewal Certification

A technician is required to renew his certification prior to the expiration of the current certificate. If a Technician's certification expires, he will not be permitted to perform the duties of this expired QMS Superpave Certification until renewal occurs. He will also be required to complete all initial requirements as outlined above. Requirements for renewal of certifications are as follows.

Level I & II Plant Technicians:	Attend the regular Level I or Level II plant Technician class including passing a written exam.
Roadway Technicians :	Attend the regular roadway technician class including passing a written exam.
Density Gauge Operators :	Attend the regular density gauge operators class, including passing a written exam, and a "hands-on" checkoff.
Mix Design Technicians:	Attend the regular mix design certification class including passing a written exam.

4. Loss of Certification by Suspension or Revocation

All certified technicians are subject to loss of their certification by suspension or revocation. The primary reason for the loss of a certification would be the falsifying of test results, records and/or reports. Other reasons that might lead to loss of certification include insubordination, gross negligence and apparent incompetence on the part of the technician. All reported occurrences of violations, misuse or abuse of this certification will be documented by the appropriate person(s).

The NCDOT Asphalt Design Engineer may suspend or permanently revoke any certification. Suspension or revocation of a certification will be sent by certified mail to the technician, the Quality Control Manager and the Corporate Head of the company that employs the technician.

A technician has the right to appeal any adverse action which results in suspension or permanent revocation of certification by responding, in writing, to the State Materials Engineer within 10 calendar days after receiving notice of the proposed adverse action. Failure to appeal within 10 days will result in the proposed adverse action becoming effective on the date specified on the certified notice. Failure to appeal within the time specified will result in a waiver of all future appeal rights regarding the adverse action taken. The technician will not be allowed to perform duties associated with the certification during the appeal process.

The State Materials Engineer will hear the appeal and make a decision within 7 days of hearing the appeal. Decision of the State Materials Engineer shall be final and shall be made in writing to the technician.

If a certification is temporarily suspended, the technician must pass any applicable written examination and any proficiency examination, at the conclusion of the specified suspension period, prior to having the certification reinstated.

1.3.8 NCDOT Asphalt Technician Certification - Enrollment Procedures

The Department requires all students to enroll in the appropriate class(es) prior to attendance of the class(es). Below are the guidelines for class enrollment into the training classes.

1. Students will only be enrolled by submission of application, applicable fee, and all other required documents. Class space or slots will not be held or reserved.

2. Only mailed applications are accepted for non-NCDOT enrollees. Mailed or HiCAMS applications are acceptable for NCDOT personnel. No faxed applications accepted.

3. Non-NCDOT applications must be mailed to the address on the bottom of the application form. All NCDOT enrollments must be forwarded to and verified by the person in the Division responsible for asphalt class registrations.

4. Required verification of prerequisites must be marked on and/or attached to the application form. Applicants must meet all prerequisites at time of application submittal.

5. Non-NCDOT agencies must attach a non-refundable check(s) to the application. NCDOT Divisions / Units funds will be drafted to cover their fees.

6. When registering multiple students, one check per class. One check per student preferred.

7. Registration form & check (if applicable) must be received no more than 90 and no less than 7 calendar days prior to class start date. Applications/check will be returned if not received within this time frame. **Note:** Students should be prepared to show a picture ID when attending class.

8. NCDOT personnel registered through HICAMS are not enrolled until all required documentation is received and approved by Unit conducting the class. Non-NCDOT personnel must submit all required documentation and fee. (See #5 above) A confirmation notice will be sent to all enrolled students. **Persons should not attend class without having received a confirmation notice.** If confirmation notice is not received within 5 business days of class start date, contact the Asphalt Laboratory at 919-329-4060.

9. Substitution, deletion or transfer of enrolled students must occur no later than 3 business days prior to class start date, and must be approved by the Asphalt Laboratory. If substitution or transfer of an enrolled student(s) is allowed, a new confirmation notice will be furnished.

10. Absent students **Will Not** be transferred to another class. If enrollment is desired for a later class, the enrollment process must be repeated for that student, including payment of the fee.

11. Applications received after a class is full will be returned. Maximum class size depends on the classroom size, except for Level II Class, which will be limited to approximately 30 students.

12. Level I and II Classes are subject to cancellation if not more than 10 students are enrolled within 7 calendar days of class start date.

13. Roadway Classes are subject to cancellation if not more than 20 students are enrolled within 7 calendar days of class start date.

14. Students attending a class but failing the exam must repeat enrollment process, pay class fee and attend class again before retesting. These applicants should mark "Retest" on the application.

15. Any student attending the class but not taking the exam for a valid reason, shall have 10 calendar days to take the exam without having to re-attend the class. This must be coordinated through the Asphalt Laboratory. Cell phones will not be allowed on Exam Day.

HMA/QMS
N.C. Department of Transportation

2013 NCDOT ASPHALT TECHNICIAN CERTIFICATIONS

Level I Plant

Intro. Asphalt Class
-1- (Application Form & Fee Required)

↓

Superpave OJT Program
(Checklist w/min. 20 days of training) **NOTE 1**

↓

Level I Superpave Technician Class w/written exam
-1- (Application Form & Fee Required)

Mix Sampling Technician Class w/written exam
-1- (Application Form & Fee Required)

Level II Plant

Current Level I Superpave Certification w/ Minimum of 1 year's Level I Experience

↓

Approved Superpave Mix Design Course w/ Written Exam
(Contact Asphalt Design Engineer at M&T)

↓

Level II Superpave Technician Class w/written exam
-1- (Application Form & Fee Required)

Roadway

Intro. Asphalt Class
-1- (Application Form & Fee Required)

↓

Roadway OJT Program
(Checklist w/min. 20 days of training)
NOTE 2

↓

QMS Roadway Technician Class w / Written Exam
-1- (Application Form & Fee Required)

Mix Design

(Level I Plant Certification, or completion of OJT Program, or Equivalent Experience required.)

↓

Approved Superpave Mix Design Course (1 week)
(Contact Asphalt Design Engineer for Available Mix Design Courses)

↓

Mix Design Certification Class (1-½ days) w / Written Exam
-1- (Application Form & Fee Required)
[Completed Aggregate Consensus Properties Checklist Required]

Density Gauge

Nuclear Safety Training Course
(For Info., contact Soils Section w / M&T Lab)

↓

QMS Density Gauge Technician Class w / written exam
-2- (Application Form & Fee Required)

↓

"Hands On" QMS Training and Checkoff
(Scheduled thru the Soils Section of the M & T Lab)

SUBMIT APPLICATIONS and FEES as FOLLOWS

-1- Submit to Asphalt Design Engineer (M&T Lab)

-2- Submit to Soils Engineer (M&T Lab)

NOTE 1 : In lieu of the 20 day minimum training and the minimum requirements in Parts II, III and IV of the OJT Checklist, a current asphalt plant mix testing certification from another State or other approved testing agency may be substituted. In this case, a copy of the certification shall be attached to the back of the OJT checklist.
In addition, the OJT technician must perform one repetition of all requirements in Parts II, III, and IV in the presence of a certified plant technician prior to the checkoff by a final review technician. All other requirements of this OJT checklist shall be completed as specified.

NOTE 2 : In lieu of the 20 days minimum training, either of the following may be substituted:
1) a current roadway paving certification from another state or other approved testing agency, or
2) Certification verifing a minimum of 1 year asphalt roadway paving experience from a supervisor who has direct knowledge of the applicant's roadway paving experience.
In either case, the appropriate certification shall be attached to the back of the OJT checklist and included with the class application package. All other requirements of the OJT checklist shall be completed in full as specified, including the Final Review Checkoff by an Approved Final Review Technician.

1.4 QMS LABORATORY TECHNICIAN ASSESSMENT PROGRAM

1.4.1 General

The mission of the Assessment Program is to determine the competency of the Quality Control and the Quality Assurance technicians in the QMS program by observation and by comparison of sampling and testing results.

1.4.2 Technician Assessments

It is the intent of this program to validate the competency of the personnel performing quality control and quality assurance testing of Hot Mix Asphalt and QA/QC Laboratory Equipment used in the QMS program is in compliance with specifications. In order to determine this competency, the following rating system will be used to grade QMS/HMA Superpave technicians:

- **Satisfactory** – all test procedures are performed with no corrections or exceptions.
- **Acceptable with Exceptions** – while performing test procedures, the technician made mistakes, but did not or could not make corrections during the procedure. The technician will be reassessed.
- **Unsatisfactory** – while performing test procedures, the technician made mistakes and did not make corrections during the procedure. The technician demonstrated a lack of knowledge about the testing procedures. This may require remedial training, and could result in suspension of certification. The technician will be reassessed.

Review by the Asphalt Assessment Engineer will be performed prior to any action in the case of an unsatisfactory assessment. Any unsatisfactory assessments that the Assessment Engineer regards as requiring more than remedial training, or if remedial training has not been effective, will be brought to the attention of a Review Committee comprised of the Asphalt Design Engineer, Compliance & Assurance Engineer, and the QMS Assessment Engineer. A reassessment will be performed on any technician that receives any rating other than satisfactory. It will be the determination of the Assessment Engineer if the reassessment process should include an additional material correlation. An assessment can be performed at any time regardless of the fact that the material is being transported to a NCDOT project or private work.

The technician will be allowed two continuations in the event of an emergency that prevents him/her from meeting an agreed upon assessment schedule. If the assessor has made three attempts to assess the technician, or if the requested continuation does not fit the definition of an emergency, the Assessment Engineer will submit the technician's name and necessary documentation to the Review Committee. An emergency, in this case, would be defined as an event requiring the complete attention of the technician to the exclusion of performing any testing.

1.4.3 Frequency

The following guidelines shall be used in determining assessment frequencies for personnel:

A) All Level I and Level II Technicians are eligible to be assessed.
B) QA Supervisors shall be assessed once a year.
C) All Final Review Technicians shall be assessed once a year.
D) All technicians who are actively testing asphalt mix are subjected to be assessed.

1.4.4 Sampling

All personnel being assessed shall perform all sampling in accordance with Section 7.5. In addition, an IA portion of the sample will be taken at the same time as the QC or QA sample. In conjunction with QA approval an additional sample may be directed at any time and any location during production (in lieu of the next randomly scheduled sample for that increment).

1.4.5 Testing

All personnel being assessed shall perform all tests in accordance with their respective procedures as stated in Section 7.

1.4.6 Equipment

All equipment used in the testing must be properly calibrated and maintained as required by Section 7.2 prior to the QC or QA technicians performing the tests. The assessor will perform an equipment assessment during which they will verify the calibration of the testing equipment. The equipment assessment will typically be performed during the scheduled technician assessment visit. If during the assessment visit, equipment is found to out of specification, the equipment must be brought into compliance or replaced as per the requirements of Section 7.2. Once the equipment issue has been resolved, notify the assessor so the assessment can be completed. If the laboratory fails to comply with the above requirements, the Engineer may stop production as detailed in Section 609-5(b) of the Specifications. If the verification determines that the equipment is out of calibration, testing of the mix shall stop and cannot resume until the equipment is brought into compliance or is replaced by equipment that is within compliance.

1.4.7 Loss of Certification

All certified technicians are subject to the loss of certification by suspension or revocation as defined in Section 1.3.7. In addition, the following provisions shall apply to any technician assessed under this program.

If the QC/QA technician receives an unsatisfactory rating, the assessment will be reviewed by the assessor and the Assessment Engineer. Following the review of the unsatisfactory assessment, the QC Manager/QA Supervisor will be notified by e-mail. The QC Manager/QA Supervisor should review the assessment with the technician and perform whatever corrective actions they deem necessary within ten (10) calendar days. The Assessment Engineer will contact the assessor who will then perform a reassessment within ten (10) calendar days. This reassessment will be performed on ALL test procedures.

1. Suspension:

Failure of the QC/QA technician to satisfactorily complete the reassessment may result in the suspension of the technician's certification. Notification of the suspension will be in the form of a letter to the company's management or the appropriate Division Engineer. Once a technician's certification is suspended, he/she will be required to complete the OJT program and have a satisfactory assessment before their certification will be reinstated. However, the technician can appeal, but the certification will remain suspended until the appeal process is completed. If the assessment following the OJT process is unsatisfactory, the technician's certification will be revoked. However, the technician can request a hearing with the Review Committee. The Review Committee

will review the assessment documentation, as well as any other documentation deemed necessary. The Review Committee can request that additional OJT be performed, overturn the reassessment and have a new assessment performed, or they can uphold the revocation of certification.

2. Revocation:

Revocation of the technician's certification may occur if an unsatisfactory reassessment occurs after the OJT completion. Also, if the technician has two suspensions in the same certification period, their certification may be revoked. The final revocation decision will be made by the Review Committee and will be effective on the date of the letter sent to the technician. Copies of the letter will be sent to the producer, the Division Engineer, the Division QA Supervisor and FHWA. The technician can appeal, however, revocation continues unless the Review Committee reverses it. The technician can regain their certification based on the ruling of the Review Committee.

3. Reinstatement of Certification:

All certified technicians may regain their certification in the manner defined in Section 1.3.7.

1.4.8 Correlation

At the completion of the assessment, the assessor will retain the IA portion of the sample and a copy of the QC or QA worksheet. This sample will be returned to either the Central Asphalt Laboratory or to an appropriate M&T Regional Laboratory. The sample information will be entered into HiCAMS by the assessor. Upon completion of the tests, the assessor will correlate the results. Depending on the outcome of the sample correlation, an investigation may be conducted to determine the cause of any testing disparity.

1.4.9 Record Keeping

At the completion of each assessment, the assessor will provide a completed hard copy of the M&T 901 form to the assessed technician. The assessor will also send a follow-up copy via email to the QC Manager/QA Supervisor after each assessment.

SECTION 2

MATERIALS USED IN ASPHALT PAVING

2.1 GENERAL DESCRIPTION OF ASPHALT PAVING MATERIALS / PAVEMENTS

Asphalt pavements are composed of three basic components - 1) asphalt binder, 2) aggregates, and 3) air voids. Aggregates are generally classified into two groups - coarse and fine, and normally constitute 90 to 96 percent by weight of the total mixture. Asphalt binders are classified by various grading systems and normally constitute 4 to 10 percent of the total mixture. Probably the most important but often overlooked component of an asphalt mix is air voids. In this section of this manual, only asphalt binder, aggregates and other additives are discussed. Air voids and the role it has in asphalt mixtures and pavement performance will be discussed in later sections of this manual.

There are many different types of asphalt and many different types of aggregates. Consequently, it is possible to make different kinds of asphalt pavements. Among the most common types of asphalt pavements are:

* Dense-Graded Hot Mix Asphalt (HMA);
* Warm-Mix Asphalt (WMA);
* Open-Graded Asphalt Friction Course; Permeable Asphalt Drainage Course
* Ultra-Thin Bonded Wearing Course
* Asphalt Surface Treatments;
* Emulsified Asphalt Mixes (Cold Mixes);
* Others, SMA, In-Place Recycled Mixes (both hot and cold)

This manual primarily addresses asphalt concrete (sometimes referred to as “hot mix asphalt” or simply “HMA”). HMA is a paving material that consists of asphalt binder and mineral aggregate with appropriate air voids. The asphalt binder, either an asphalt cement or a modified asphalt cement, acts as a binding agent to glue aggregate particles into a dense mass and to waterproof the mixture. When bound together, the mineral aggregate acts as a stone framework to impart strength and toughness to the system. The performance of the mixture is affected both by the properties of the individual components and the combined reaction in the system.

2.3 TECHNICIAN RESPONSIBILITIES

The Contractor’s Quality Control technicians and the DOT’s Quality Assurance technicians are responsible for the way asphalt and aggregate materials are handled, stored, sampled, mixed, hauled, placed, and compacted. They have responsibilities to check such things as material sources, grades, types, temperatures, and moisture contents. Both must also be fully capable of reviewing and interpreting mix design data, laboratory test results and specifications, when necessary, as well as being able to perform sampling and testing.

The technician will be unable to perform his job without a working knowledge of the materials from which an asphalt concrete pavement is made, particularly material characteristics and their role in pavement performance. He must also understand how improper handling of materials can adversely affect their properties and ultimately, their behavior in the finished pavement. Having such information will

give him the confidence to make proper day-to-day decisions and will eliminate the role of guesswork in the job, ensuring that good quality control is maintained.

Materials inspection and control demands accurate and thorough documentation. Facts, figures, dates, names, locations, and conditions are important elements in daily record-keeping. Experience has taught us over the years that a scrap of information that seems unimportant when recorded can later turn out to be the very piece of information needed to analyze a serious problem.

2.4 ASPHALT MATERIALS

2.4.1 Asphalt Cement - Introduction

As mentioned earlier in this Section of the Manual, one of the basic components of asphalt mixes is asphalt binder. Asphalt binder at normal atmospheric (ambient) temperatures is a black, sticky, semi-solid, highly viscous, cementitious material. Asphalt binder is typically a solid to semisolid at normal air temperatures and becomes a liquid at high temperatures. Asphalt is made up largely of a hydrocarbon called bitumen and therefore is often called a bituminous material.

Because asphalt binder is sticky, it adheres to aggregate particles and can be used to cement or bind the aggregate in an asphalt concrete mixture. Asphalt binder is an excellent waterproofing material and is unaffected by most acids, alkalis, and salts. This unique combination of characteristics and properties is a fundamental reason why asphalt is an important paving material.

2.4.2 Refining Crude Petroleum

Asphalt is a constituent of crude petroleum (crude oil). Most crude oil sources contain some asphalt. However, some crude oil sources may be almost entirely asphalt and some crude oils contain little or no asphalt. The primary source for asphalt cement used in the United States today is from the refining of crude petroleum (crude oil). Crude petroleum from oil wells is separated into its constituents or fractions in a refinery. (See Fig. 2-1). Accordingly, asphalt is obtained as a residue or residual product, and is valuable and essential for a great variety of engineering and architectural uses.

Petroleum asphalt for use in pavements is usually called paving asphalt, or asphalt binder to distinguish it from asphalt made for non-paving uses, such as roofing and industrial purposes.

2.4.3 Classification and Grading of Paving Grade Asphalts

Paving grade asphalts are classified into three general types:

(1) Asphalt Cements (Binders)
(2) Emulsified Asphalts
(3) Cutback Asphalts*

Asphalt Cement is the residual by-product from the distillation process. Emulsified asphalts and cutback asphalts are then made from asphalt cements and are frequently referred to as liquid asphalts.

**It should be noted that at this time North Carolina Specifications do not allow for any use of cutback asphalts primarily due to environmental concerns.*

Included in the Standard Specifications and Special Provisions are the specific requirements for the various grades and types of asphalt materials. Tables 2-1 and 2-2 included in this manual summarize the various grades and typical applications of asphaltic materials used in pavement construction by the NCDOT. However, the technician should always review the project special provisions to determine if there are any additional grades or specific requirements which must be utilized on a specific project.

Paving grade asphalt binder must be made fluid (liquefied) for handling and use during construction operations, such as pumping through pipes, transporting in tanks, spraying through nozzles and mixing with aggregate. Asphalt binder can be made temporarily fluid (liquefied) for construction operations in three ways:

1. By heating the asphalt binder with indirect heat in a storage tank: After construction operations (mixing, spraying, etc.) the hot liquid asphalt binder cools and changes from a fluid back to a semi-solid condition at ambient air conditions. During the heating process the asphalt binder temperature must not exceed the manufacturers recommended temperature. If the asphalt binder is overheated, a process known as oxidation will occur. Oxidation causes the asphalt to become more brittle, leading to the term oxidative, or age, hardening. Oxidation occurs more rapidly at higher temperatures. A considerable amount of hardening occurs during HMA production, when the asphalt binder is heated to facilitate mixing and compaction. When pavement construction operations are finished, the asphalt binder cools and reverts to its normal semi-solid condition and functions as the cementing and waterproofing agent that makes the pavement stable and durable.

2 By emulsifying the asphalt with water: Emulsified asphalts are a mixture of asphalt cement, water, and an emulsifying agent (such as soap). While asphalt and water ordinarily do not mix, they can be made to mix by mechanically milling asphalt in a colloid mill with water and a small amount of emulsifying agent under high pressure. The resulting product, called emulsified asphalt, is a fluid and can be handled and sprayed at relatively low temperatures. Emulsified asphalts are normally liquid at room temperature. After application, the water evaporates and the asphalt particles coalesce (join together) into a continuous film that bonds the aggregate particles together. When the water and asphalt separate, it is said that the emulsion breaks or sets and the asphalt residue remains.

3. By dissolving the asphalt with a petroleum solvent such as naphtha, gasoline, kerosene, or diesel oil: Mixing the solvent with the asphalt liquefies the asphalt at ambient air temperatures such that it can be sprayed or mixed with aggregate during construction. The solvent then evaporates over time, the residual asphalt returns to its semi-solid state and performs its intended function. *As noted earlier, cutback asphalts are not used by NCDOT because of environmental concerns.*

(A) Asphalt Binders

Superpave "binder"–specifications are based on tests which measure physical properties of the asphalt "binder" that can be related directly to field performance by engineering principles. The tests are conducted at temperatures encountered by in-service pavements. These "binder" specifications have now been adopted by AASHTO and are referenced under AASHTO M 320.

Performance graded (PG) binders are designated with grades such as PG 64-22. The first number, 64, is often called the "high temperature grade." This means that the binder would possess adequate physical properties to perform satisfactorily at least up to 64°C (147°F). This would be the high pavement temperature corresponding to the climate in which the binder is actually expected to satisfactorily serve. Likewise, the second number, -22, is often called the "low temperature grade" and means that the binder would possess adequate physical properties in pavements to perform satisfactorily at least down to -22°C (-8°F).

Additional consideration in selecting the grade to be used is given to the time of loading (vehicle speed on open highway, city streets, intersections, etc.) the magnitude of loads (heavy trucks), and at what level the material is within the pavement structure. **Table 2-1** shows the current binder grades in Superpave Specifications (AASHTO M 320). Under the Superpave specifications, the binder grade used in standard hot mix asphalt pavements in North Carolina is Performance Grade 64-22 (PG 64-22). Other grades are required under certain conditions, such as heavy traffic and in recycled mixes.

(B) Emulsified Asphalts

Another method to liquefy the asphalt is to emulsify the asphalt in water. Asphalt liquefied by this method is known as emulsified asphalt. With emulsified asphalt, the basic idea is that the water will escape by absorption and evaporation, leaving the asphalt binder to do its job.

The object is to make a dispersion of the asphalt binder in water, stable enough for pumping, prolonged storage, and mixing. Furthermore, the emulsion should break down quickly after contact with aggregate in a mixer, or after spraying on the roadbed. Upon curing, the residual asphalt retains all of the adhesive, durability, and water-resistant properties of the asphalt binder from which it was produced.

By proper selection of an emulsifying agent and other manufacturing controls, emulsified asphalts can be produced in several types and grades. By choice of emulsifying agent, the emulsified asphalt can be anionic (asphalt globules electro-negatively charged) or cationic (asphalt globules are electro-positively charged) or nonionic (asphalt globules are neutrally charged). In practice, the first two types are ordinarily used in roadway construction and maintenance activities. The letter “C” in front of the emulsion type denotes cationic. The absence of the “C” denotes anionic or nonionic. For example, RS-1 is anionic or nonionic and CRS-1 is cationic.

Because particles having a like electrostatic charge repel each other, the asphalt globules are kept apart until the emulsion is deposited on the surface of the aggregate particles. At this point, the asphalt globules coalesce (join together) through neutralization of the electrostatic charges or water evaporation. Coalescence of the asphalt globules occurs in rapid and medium-setting grades. When this coalescence takes place, it is referred to as "breaking" or "setting".

Emulsions are further classified on the basis of how quickly the asphalt will coalesce; i.e., revert to asphalt binder. The terms RS, MS, and SS have been adopted to simplify and standardize this classification. They are relative terms only and mean rapid-setting (RS), medium-setting (MS), and slow-setting (SS). The tendency to coalesce is closely related to the mixing of an emulsion. An RS emulsion has little or no ability to mix with an aggregate, an MS emulsion is expected to mix with coarse but not fine aggregate, and an SS emulsion is designed to mix with fine aggregate.

Additional grades of high-float medium-setting anionic emulsions, designated HFMS, have been added to standard AASHTO and ASTM specifications. These grades are used primarily in cold and hot plant mixes, coarse aggregate seal coats, road mixes, and tack coats. High float emulsions have a specific quality that permits a thicker film coating without danger of runoff.

A quick-set type of emulsion (QS) has been developed for slurry seals. Its use is rapidly increasing as the unique quick-setting property solves one of the major problems associated with the use of slurry seals.

(C) Cutback Asphalts

As noted earlier, cutback asphalts are not used by NCDOT because of environmental concerns and therefore are not discussed further in this Manual.

2.4.4 Characteristics of Asphalt

The characteristics of asphalt binder under varying temperatures, rates of loading, and stages of aging determine its ability to perform as a binder in the pavement system. The tests and specifications used to measure and control these characteristics in the Superpave system are discussed in *Performance Graded Asphalt Binder Specification and Testing*, Superpave Series No. 1 (SP-1), The Asphalt Institute.

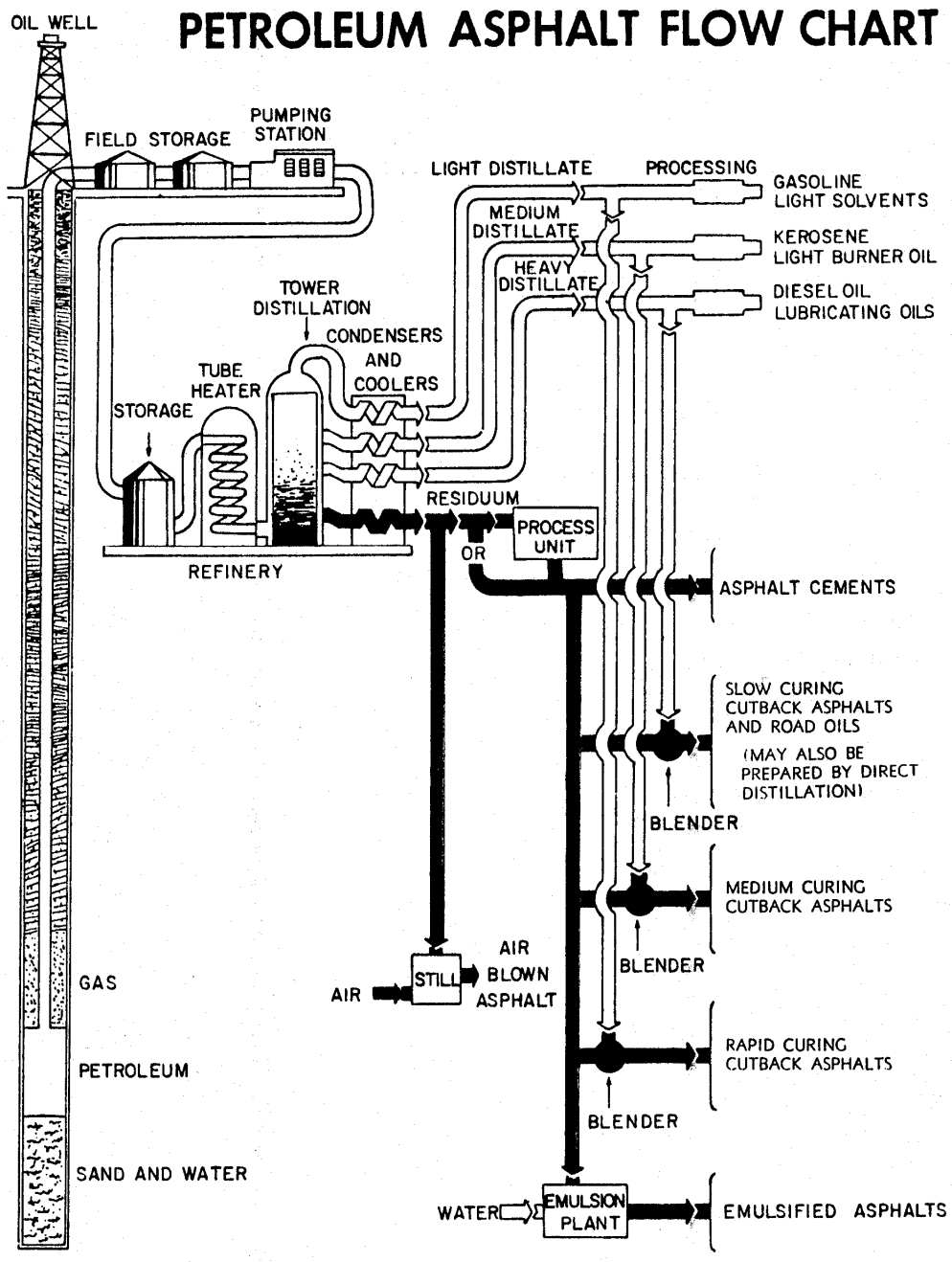

TYPICAL REFINING PROCESS

Figure 2-1

2.4.5 Testing Properties of Performance Graded Asphalt Binders

A key feature in the Superpave system is that physical properties are measured on binders that have been laboratory aged to simulate their aged condition in a real pavement. Various tests are used for determining and measuring the properties of an asphalt binder. The ASTM and AASHTO references that describe in detail the equipment and procedures required to conduct these tests are available from a number of sources. These tests are normally conducted by the asphalt supplier or the Materials and Tests Laboratory in Raleigh. The specifications require that the Contractor furnish a certified delivery ticket for all asphalt materials to be used on a project (See Article 1020-1 of the Standard Specifications).

2.4.6 Specific Gravity of Asphalt Binder

Specific gravity is the ratio of the weight of any volume of a material to the weight of an equal volume of water, both at a specified temperature. As an example, an aggregate with a specific gravity of 2.653 weighs 2.653 times as much as water. Asphalt binder has a specific gravity of approximately 1.030 at 60°F (15.6°C).

The specific gravity of an asphalt binder is not normally indicated in the job specifications. Nonetheless, knowing the specific gravity of the asphalt binder being used is important for two reasons. Asphalt binder expands when heated and contracts when cooled. This means that the volume of a given amount of asphalt binder will be greater at higher temperatures than at lower ones. Specific gravity measurements provide a means for making temperature-volume corrections, which are discussed later.

2.4.7 Asphalt Additives

(A) Silicone: Silicone is used in asphalt because of its foam suppressing capabilities and also because it helps prevent the tearing and pulling of an asphalt mix behind the paving machine. ***Section 620-3 of the Standard Specifications requires that silicone is to be added to asphalt binder used in all surface course mixtures***, including open-graded asphalt friction courses. The silicone is added at the rate of 1 ounce per 2000-2500 gallons (4 ml per 1000-1250 liters) of asphalt binder and may be added either at the asphalt plant or at the supplier's terminal when so noted on the delivery ticket. The silicone should be adequately circulated throughout the asphalt binder storage tank prior to use. The brand used must have been previously approved by the Department. A listing of approved sources of silicone may be obtained through the M&T Lab in Raleigh, N.C.

(B) Anti-Strip Additive: Heat stable liquid chemical or hydrated lime anti-strip additives are required to be incorporated into asphalt mixes in an effort to prevent the separation of the asphalt from the aggregate particles (stripping). Chemical anti-strip additives are blended with the asphalt binder prior to introduction of the binder into the aggregate. Hydrated lime is blended with the aggregate prior to the aggregate entering the dryer.

All mixes including recycled mixes require either chemical or lime anti-strip additive or a combination of both. The technician should always refer to the JMF to determine the type, rate required and the brand specified. The Contractor may use a different brand or grade, provided the proper TSR testing has been performed with satisfactory results prior to its use. If a different rate is required, the Contractor must obtain a new JMF.

(C) Warm-Mix Asphalt Additives: Chemical additives that allow for lower mixing and placement temperatures. These additives are commonly categorized as: foaming agents, surfactants, or wax-based agents. The technician should always refer to the JMF to determine the type, rate required and the brand specified.

2.4.8 Asphalt Binder Storage

The asphalt binder storage capacity at the plant must be sufficient to allow uniform plant operation. Where more than one grade of asphalt binder is required for a project, at least one tank will be needed for each grade or the tank must be completely emptied before a different grade is added. Different grades must not be mixed.

Asphalt contents of storage tanks must be capable of being measured so that the amount of materials remaining in the tank can be determined at any time. This is necessary in order to determine the amount of an additive to be added, when required. They also must be heated to keep the asphalt fluid enough to move through the delivery and return lines; however, the maximum storage temperature should not exceed the supplier's recommendation. Heating is done either electrically or by circulating steam or hot oil through coils in the tank. Regardless of the heating method used, an open flame must never come in direct contact with the tank or contents. Where circulating hot oil is used, the oil level in the reservoir of the heating unit should be checked frequently. A drop in the level could indicate leakage of the hot oil into the tank, leakage which results in contamination of the asphalt. All transfer lines, pumps and weigh buckets also must have heating coils or jackets so that the asphalt will remain fluid enough to pump. One or more thermometers must be placed in the asphalt feed line to ensure control of the asphalt temperature, as it is being introduced into the mixer or drum. The asphalt tanks must be equipped with a circulation system capable of uniformly dispersing and mixing additives throughout the total quantity of asphalt binder in the tank.

Adequate pumps must be furnished so that asphalt binder can be unloaded from tankers and still continue to operate the plant. A sampling valve or a spigot must be installed in the circulating system or tank to allow sampling of the asphalt. When sampling from the circulating system, exercise extreme care, as pressure in the lines may cause the hot asphalt to splatter.

Safety: Asphalt binder, if heated to a high enough temperature, will flash in the presence of a spark or open flame. The Minimum Flash Point temperature specified for all performance graded (PG) asphalts is 446℉ (230℃). This temperature is well above the temperatures normally used in paving operations; however, to be sure there is an adequate margin of safety, the flash point of the asphalt should be known.

2.4.9 Delivery and Acceptance of Asphalt Materials

Obtain Performance graded asphalt binder (PGAB) only from sources participating in the Department's Quality Control/Quality Assurance (QC/QA) program. The PGAB QC/QA program is designed to give Producers or Suppliers more responsibility for controlling the quality of material they produce and to utilize the QC information they provide in the acceptance process by the Department. It requires Producers or Suppliers to perform QC sampling, testing, and recordkeeping on materials they ship for use by the Department. Also, it requires the Department to perform QA sampling, testing, and recordkeeping to confirm the performance of the Producer's quality control plan set forth in the QC/QA program.

NCDOT specifications (Article 1020-1) require that asphalt materials used in asphalt pavement construction be tested and certified as meeting all applicable specification requirements. This certification for acceptance purposes is furnished with each delivered load of material, subject to certain conditions outlined in the specifications.

This Article of the specifications also requires that all asphalt transport tankers, rail, and truck tankers must have a sampling valve in accordance with Asphalt Institute Publication MS-18, Sampling Asphalt Products for Specification Compliance and ASTM D 140 or a comparable device acceptable to the Engineer. A picture of a typical sampling device is shown in Figure 2-2.

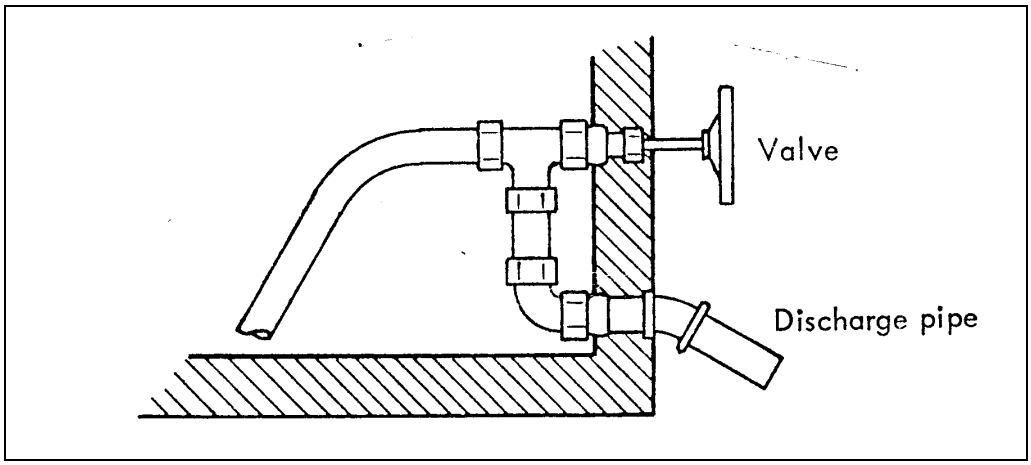

FIGURE 2-2 - Asphalt Sampling Device for Vehicle or Storage Tank

The sample must be taken from the sampling device on the transport tanker. Sample containers must be new and are available from the M & T Laboratory. Glass containers should not be used. The sample container should not be washed, rinsed out, or wiped off with oily cloths. The top of the container must fit securely. In obtaining a sample from the sampling valve, approximately 1 gallon (4 liters) of the asphalt material should be drawn from the valve and discarded for sampling purposes. The container should then be filled from the valve and the lid securely fastened to the container. Samples shall not be transferred from one container to another. The sample should then be forwarded to the Materials and Tests Unit with the appropriate sample identification cards.

This Article also outlines the information that is to be shown on load delivery tickets for all asphalt materials. Also included is an example statement of certification forms which must be included on the delivery ticket. The Contractor must furnish a ticket from the supplier, which includes a statement of certification of the grade and amount of asphalt material, including a statement relative to the brand, grade, and quantity or rate of anti-strip additive added to the material. In addition, a separate statement of certification that the tanker was clean and free of contaminating material is required from the transporter on the ticket. Each certification shall be signed by an authorized representative of the supplier or transporter. These certifications may be either stamped, written, or printed on the delivery ticket, or may be attached to the delivery ticket. Failure to include or sign the certifications by either the supplier or transporter will be cause to withhold use of the material until a sample can be taken and tested, except where an alternative testing and invoicing procedure has been preapproved by the Engineer.

It will not be necessary to fill out Materials Received Reports (MRRs) for asphalt binder or emulsions. All asphalt materials will be accepted by certification in accordance with Section 1020-1 of the Standard Specifications and the following procedures.

When a shipment of asphalt binder is received at the asphalt plant, a copy of the bill of lading will be furnished to the QA Supervisor, attached to the appropriate QC-1 report from that plant, and maintained in the appropriate plant file within the QA Lab. Detailed procedures for maintaining bills of lading for prime and tack coat materials are covered in Section 9.1.2 of this manual.

M&T Unit representatives will take verification samples from the asphalt terminals, which will be logged in and tested at the M&T central facility with results entered into an Asphalt Materials Database.

If a sample fails but the failure is considered by the Chemical Testing Engineer to be immaterial, the terminal will be notified of the test results and allowed to continue shipping, provided corrective action is taken. Samples will continue to be taken at the normal frequency.

If a sample fails and the failure is considered by the Chemical Testing Engineer to be significant, the terminal will be notified of the results and they will be instructed to discontinue shipments and take corrective action. M&T will resample and retest the material at the terminal. Any materials from this batch in a Contractor's storage tank will be evaluated for acceptability.

In the case of a significant material failure, the Chemical Testing Engineer will send a failure notification form to all QA Supervisors. The QA Supervisors will review the bills of lading in their files to determine if they have received any material from that batch. If so, they will notify the appropriate Resident Engineers. They will then review the appropriate QC records for any possible related test deviations. The failure notification form will include an investigation section to be filled out by the QA Supervisor. They should include information concerning test deviations and any actions they took concerning or involving the Resident Engineers on this form and attach it to the appropriate bill of lading and QC-1 report in their file and send a copy to the Chemical Testing Engineer.

Resident Engineers will not be receiving direct notification of failures from the Chemical Testing Engineer because there is no way he can determine who should receive the notifications. By sending these notifications to the QA Supervisors, a relatively small number of forms can be sent out and the appropriate Resident Engineers will be notified by the QA Supervisors.

All actions taken by the QA Supervisors and Resident Engineers will be noted by the Chemical Testing Engineer in the binder database summary.

TABLE 2-1
SUPERPAVE PERFORMANCE GRADED BINDER GRADES
(AASHTO M 320)

High Temperature Grade	Low Temperature Grade
PG 46	(-) 34, 40, 46
PG 52	(-) 10, 16, 22, 28, 34, 40, 46
PG 58	(-) 16, 22, 28, 34, 40
PG 64*	(-) 10, 16, **22***, 28, 34, 40
PG 70	(-) 10, 16, 22, 28, 34, 40
PG 76	(-) 10, 16, 22, 28, 34
PG 82	(-) 10, 16, 22, 28, 34

***Standard Grade based on high and low pavement temperature requirements for NCDOT Hot Mix Asphalt is PG 64-22 unless otherwise specified.**

TABLE 2-2
EMULSIFIED ASPHALTS
AASHTO M 140 (Anionic)
AASHTO M 208 (Cationic)

Type	Grade	Uses
Anionic	RS-1	Tack Coat; AST Seal Coat
	RS-1h	Tack Coat; AST Seal Coat
	RS-2	Tack Coat; AST Mat Coat; AST Seal Coat
	SS-1	Prime Coat
	HFMS-1	Tack Coat
	HFMS-2	Tack Coat
	HFMS-2h	Tack Coat
Cationic	CRS-1	Tack Coat; AST Seal Coat
	CRS-1h	Tack Coat; AST Seal Coat
	CRS-2	Tack Coat; AST Mat Coat; AST Seal Coat
	CRS-2P	AST Mat Coat; AST Seal Coat
	CMS-2	AST Seal Coat
	CSS-1h	Prime Coat
	CQS-1h	Prime Coat

2.4.10 Temperature-Volume Relationships of Asphalts

As with all liquids and most solids, asphalt expands when heated and contracts when cooled. These changes in volume must be taken into consideration because, regardless of the temperature at which asphalt is shipped and stored, the basis for buying and selling asphalt materials, for making asphalt plant settings and mix design calculations is the asphalt's volume and specific gravity at 60℉ (15.6℃). For example, when 5,000 gallons (19,000 liters) of asphalt at 300℉ (149℃) is loaded into a tanker at a terminal for sale and delivery to an asphalt plant, the volume at 60℉ (15.6℃) may need to be calculated and recorded for various purposes.

The calculation involved is rather simple. It requires that two pieces of information be known:

* The temperature of the asphalt when used.
* The asphalt specific gravity or Group No. @ 60℉ (15.6 ℃).

The asphalt temperature and specific gravity are used to locate the proper correction factor on one of the following tables. These tables have been in use for at least three decades and are the only data currently available for temperature corrections above 300°F (149℃). (See Table 2-3)

When the Technician knows the asphalt temperature and the necessary correction factor, the following formula is used to calculate the asphalt volume at 60℉ (15.6℃):

$$V_{60} = V_t (CF)$$

where, V_{60} = Volume at 60℉ (15.6℃)
V_t = Volume at given temperature
CF = Correction Factor from TABLE.

The following example illustrates how the calculation is made:

> A truck has just delivered 5,000 gallons (19,000 liters) of asphalt at a temperature of 300℉ (149℃). The Specific Gravity (Sp.Gr.) of the asphalt is 0.970. What would the asphalt's volume be at 60℉ (15.6℃)?

Because the asphalt Specific Gravity is above 0.966, the tables for Group O (Table 2-3) are used to find the correction factor. For 300℉ (149℃), the correction factor listed is 0.9187.

Therefore,

V_{60} = 5,000 gallons x 0.9187 = 4,594 gallons or V_{60} = 19,000 liters x 0.9187 = 17,455 liters

The volume of the particular asphalt at 60℉ (15℃) is therefore, 4,594 gallons (17,455 liters).

TABLE 2-3
MULTIPLIERS FOR CORRECTING
ASPHALT VOLUMES TO THE BASIS OF 60°F / 15.6°C

TABLES DERIVED FROM ASTM D 4311

(Group 0 - Specific Gravity at 60℉ / 15.6℃ above 0 .966)

℉ / ℃	0	10	20	30	40	50	60	70	80	90
0 / -18	1.0211	1.0176	1.0141	1.0105	1.0070	1.0035	1.0000	0.9965	0.9930	0.9896
100 / 38	0.9861	0.9826	0.9792	0.9758	0.9723	0.9689	0.9655	0.9621	0.9587	0.9553
200 / 93	0.9520	0.9486	0.9452	0.9419	0.9385	0.9352	0.9319	0.9286	0.9253	0.9220
300 / 150	0.9187	0.9154	0.9122	0.9089	0.9057	0.9024	0.8992	0.8960	0.8928	0.8896
400 / 200	0.8864	0.8832	0.8800	0.8768	0.8737	0.8705	0.8674	0.8643	0.8611	0.8580

(Group 1 - Specific Gravity at 60℉ / 15.6℃ of 0.85 0 to 0. 966)

℉ / ℃	0	10	20	30	40	50	60	70	80	90
0 / -18	1.0241	1.0201	1.0160	1.0120	1.0080	1.0040	1.0000	0.9960	0.9921	0.9881
100 / 38	0.9842	0.9803	0.9763	0.9725	0.9686	0.9647	0.9609	0.9570	0.9532	0.9494
200 / 93	0.9456	0.9418	0.9380	0.9343	0.9305	0.9268	0.9231	0.9194	0.9157	0.9120
300 / 150	0.9083	0.9047	0.9010	0.8974	0.8938	0.8902	0.8866	0.8831	0.8795	0.8760
400 / 200	0.8724	0.8689	0.8654	0.8619	0.8585	0.8550	0.8516	0.8481	0.8447	0.8413

2.5 MINERAL AGGREGATES

2.5.1 Introduction

The amount of mineral aggregate in asphalt paving mixtures is generally 90 to 96 percent by weight and 75 to 85 percent by volume. Mineral aggregate is primarily responsible for the load supporting capacity of pavement. Asphalt pavement performance is also heavily influenced by aggregate characteristics and properties.

Mineral aggregate has been defined as any hard, inert mineral material used for mixing in graduated particles or fragments. It includes sand, gravel, crushed stone, slag, rock dust or powder. Aggregates may also include recycled materials, such as reclaimed asphalt pavement (RAP) or reclaimed asphalt shingle material (RAS).

2.5.2. Sources of Aggregates

Aggregates for asphalt paving are generally classified according to their source or means of preparation. They include natural aggregate (pit or bank-run aggregates), processed aggregates (from quarries), synthetic or artificial aggregates (manufactured), and recycled aggregates. A listing of approved sources of aggregates may be obtained through the M&T Lab in Raleigh, N.C.

(A) Natural Aggregates: Gravel and sand are natural aggregates and are typically pit or bank-run (river deposits) material. Exposed rocks are eroded and degraded by many processes of nature, both physical and chemical. The products of the degradation processes are usually moved by wind, water, or moving ice, and deposited as a soil material in various landforms.

(B) Processed Aggregate: Processed aggregate includes both quarried aggregate and natural gravel or stone that has been crushed and screened to desired sizes. Natural gravel is usually crushed to make it more suitable for use in asphalt paving mixtures and to meet specification requirements for fractured faces. The quality may be improved by crushing, which changes the surface texture of the particles, changes the rounded particle shapes to angular shapes, and improves the distribution and range of particle sizes.

(C) Synthetic or Artificial Aggregates: Aggregates resulting from the modification of materials, which may involve both physical and chemical changes, are sometimes called synthetic or artificial aggregates. They may take the form of the by-product that is developed in the refining of ore, or those specially produced or processed from raw materials for ultimate use as aggregate.

(D) Recycled Aggregates: These are salvaged aggregates obtained from the reclaiming of existing pavements (both asphalt and concrete), from waste shingle manufacturing material, or from other sources. Normally, recycled aggregate from pavements are obtained by milling an existing pavement or by breaking up the pavement and then processing the material through a crusher. Waste shingle material is obtained by processing manufacturing waste by grinding and screening to acceptable sizes.

2.5.3 Evaluating the Quality of Aggregates

2.5.3(a) Aggregate Gradation

To specify aggregate gradation, Superpave uses the 0.45 power gradation chart with control limits to specify the mix gradation limits and to develop a *design aggregate structure*. A Superpave design aggregate structure must pass between the control points. The maximum density gradation is drawn from the 100 percent passing the maximum aggregate size through the origin. Maximum aggregate size is defined as one size larger than the nominal maximum aggregate size. Nominal maximum size is defined as one size larger that the first sieve size to retain more than 10 percent. The design aggregate structure approach ensures that the aggregate will develop a strong, stone skeleton to enhance resistance to permanent deformation while achieving sufficient void space (VMA) for mixture durability. Standard sizes of coarse and fine aggregate are shown in Table 1005-1 of the Standard Specifications (See Table 1005-1 at the end of this Section). Other requirements for aggregates for asphalt pavements can be found in Section 1012 of the Specifications.

Selecting an aggregate material for use in an asphalt pavement depends upon the availability, cost, and quality of the material, as well as the type of construction that is intended. Mineral aggregates play a key role in HMA performance. Two types of aggregate properties are specified in the Superpave system: source properties and consensus properties.

2.5.3(b) Source Properties

Source properties are those which are often used to qualify local sources of aggregate. These tests must be completed prior to allowing the use of any particular aggregate in a HMA mix. These properties are determined on the *individual components* rather than the aggregate blend. The source properties are:

(1) Toughness: Toughness is the percent loss of materials from an aggregate blend during the Los Angeles Abrasion test. The procedure is stated in AASHTO T 96, “Resistance to Abrasion of Small Size Coarse Aggregate by Use of the Los Angeles Machine.” This test estimates the resistance of coarse aggregate to abrasion and mechanical degradation during handling, construction, and in-service performance.

(2) Soundness: Soundness is the percent loss of materials from an aggregate blend during the sodium sulfate soundness test. The procedure is stated in AASHTO T 104, “Soundness of Aggregate by Use of Sodium Sulfate or Magnesium Sulfate.” This test estimates the resistance of aggregate to weathering while in-service. It can be performed on both coarse and fine aggregate.

(3) Deleterious Materials: Deleterious materials are defined as the weight percentage of contaminants such as shale, wood, mica, and coal in the blended aggregate. This property is measured by AASHTO T 112, “Clay Lumps and Friable Particles in Aggregates.” It can be performed on coarse and fine aggregate.

2.5.3(c) Consensus Properties

Once the aggregate sources have been selected and the source properties approved for use in Superpave mixes, an aggregate blend will be determined. The aggregate blend will consist of the percentages needed to meet the Job Mix Formula. Once the blend is determined, the following consensus properties will be analyzed to determine if the blend conforms to NCDOT requirements.

Consensus properties are those properties which are critical in achieving high performance HMA. These properties are determined on the *aggregate blend* rather than individual components. They are:

(1) Coarse Aggregate Angularity (Fractured Faces): This property ensures a high degree of aggregate internal friction and rutting resistance. It is defined as the percent by weight of aggregates larger than 4.75 mm with one or more fractured faces. Superpave specifies that coarse aggregate angularity be determined in accordance with ASTM D 5821. The Superpave Specifications include the minimum requirements for coarse aggregate angularity for each mix type.

(2) Fine Aggregate Angularity: This property ensures a high degree of fine aggregate internal friction and rutting resistance. It is defined as the percent air voids present in loosely compacted aggregates smaller than 2.36 mm. Higher void contents mean more fractured faces. The test procedure used by Superpave to measure this property is AASHTO T 304 (Method A). The Superpave Specifications include the minimum requirements for fine aggregate angularity (uncompacted void content) for each mix type.

(3) Flat and Elongated Particles: This characteristic is the percentage by weight of coarse aggregates that have a ratio of maximum to minimum dimension greater than a specified value. Elongated particles are undesirable because they have a tendency to break during construction and under traffic. The test procedure used is ASTM D 4791 (Section 8.4), “Flat and Elongated Particles in Coarse Aggregate” and it is performed on coarse aggregate larger than 4.75 mm sieve. The Superpave Specifications state that the maximum allowed Flat and Elongated Particles is 10% by weight at a 5:1 ratio for all mix types except S 4.75A, SF 9.5A, and S 9.5B.

(4) Clay Content (Sand Equivalent): Clay content is the percentage of clay material contained in the aggregate fraction that is finer than a 4.75 mm sieve. It is measured by AASHTO T 176, “Plastic Fines in Graded Aggregates and Soils by Use of the Sand Equivalent Test.” The sand equivalent value is computed as a ratio of the sand to clay height readings expressed as a percentage. The Superpave Specifications include the minimum sand equivalent requirements for each mix type.

TABLE 1012-1 AGGREGATE CONSENSUS PROPERTIES[A]				
Mix Type	**Course Aggregate Angularity[B]**	**Fine Aggregate Angularity % Minimum**	**Sand Equivalent % Minimum**	**Flat and Elongated 5 : 1 Ratio % Maximum**
Test Method	*ASTM D5821*	*AASHTO T 304*	*AASHTO T 176*	*ASTM D4791*
SF9.5A; S9.5B	75 / -	40	40	-
I19.0B; B25.0B	75 / -	40	40	10
S9.5C; S12.5C; I19.0C; B25.0C	95 / 90	45	45	10
S9.5D; S12.5D; I19.0D	100 / 100	45	50	10
OGAFC	100 / 100	45	45	10
UBWC	100 / 85	45	45	10

A. Requirements apply to the design aggregate blend.

B. 95 / 90 denotes that 95% of the coarse aggregate has one fractured face and 90% has 2 or more fractured faces.

TABLE 1005-1
AGGREGATE GRADATION - COARSE AGGREGATE
Percentage of Total by Weight Passing

Std. Size #	2"	1 1/2"	1"	3/4"	1/2"	#4	#8	#10	#16	#40	#200	Remarks
4	100	90-100	20-55	0-15	-	-	-	-	-	-	0-0.6[A]	Asphalt Plant Mix
467M	100	95-100	-	35-70	-	0-5	-	-	-	-	0-0.6[A]	Asphalt Plant Mix
5	-	100	90-100	20-55	0-10	-	-	-	-	-	0-0.6[A]	AST Mat Coat, Sediment Control Stone
57	-	100	95-100	-	25-60	0-10	0-5	-	-	-	0-0.6[A]	AST, Str. Conc., Shoulder Drain, Sediment Control Stone
57M	-	100	95-100	-	25-45	0-10	0-5	-	-	-	0-0.6[A]	AST, Portland Cement
6M	-	-	100	90-100	20-55	0-8	-	-	-	-	-	AST, Concrete Pavement
67	-	-	100	90-100	-	0-10	0-5	-	-	-	0-0.6[A]	AST
78M	-	-	-	100	98-100	20-45	0-15	-	-	-	0-0.6[A]	AST, Str. Conc., Drilled Piers, Asphalt Plant Mix
14M	-	-	-	-	-	35-70	5-20	-	0-8	-	0-0.6[A]	Asphalt Plant Mix, AST, Weep Hole Drains, Str. Conc.
9	-	-	-	-	-	85-100	10-40	-	0-10	-	0-0.6[A]	AST
ABC	-	100	75-97	-	55-80	35-55	-	25-45	-	14-30	4-12[B]	-
ABC (M)	-	-	-	-	100	5-40	0-20	-	0-10	-	0-2.5[B]	Aggregate Stabilization, Agg. Base Course, Asphalt Plant Mix
Light-weight	-	100	75-100	-	45-79	20-40	-	0-25	-	-	0-12	AST

A. See Subarticle 1005-4(A)
B. See Subarticle 1005-4(B)

Subarticle 1005-4

(A) When aggregates are used for Portland cement concrete, asphalt 1 treatment and asphalt plant mix, the requirements pertaining to material passing the No. 200 sieve are as follows:

(1) When tested during production, the amount of material passing the No. 200 sieve shall be no greater than 0.6%. When tested in a stockpile at the quarry site, the amount of material passing the No. 200 sieve shall be no greater than 1.0%.

(2) When tested at the job site before use, the amount of material passing the No. 200 sieve shall:

(a) Be no greater than 1.5% for aggregate used in Portland cement concrete or asphalt surface treatment.

(b) Be no greater than 2.0% for aggregate used in asphalt plant mix.

(3) If a stockpile at the job site is found to contain in excess of the specified amount of material passing the No. 200 sieve before use, the Engineer may approve its use provided:

(a) For aggregate used in Portland cement concrete, the total percentage by weight passing the No. 200 sieve in the combined coarse and fine aggregate in the mix does not exceed 2.0%, and provided no increase in water-cement ratio is required by the use of this aggregate.

(b) For aggregate used in asphalt plant mix, the total percentage by weight of minus No. 200 material in the plant mix being produced, as determined by the extraction test, can be maintained within the limits allowed by the job mix formula.

(B) For ABC and ABC(M), in addition to the gradation requirements, the material passing the No. 40 sieve shall not have a LL in excess of 30 nor a PI in excess of 6. For ABC used in asphalt plant mix, when tested during production, in a stockpile at the quarry site or at the job site before use, the amount of material passing the No. 200 sieve shall be from 0.0% to 12.0% by weight and the gradation requirements for material passing the No. 10 sieve (soil mortar) required in Section 1010 for ABC will not apply. For ABC not used in asphalt plant mix, the gradation requirements for material passing the No. 10 sieve (soil mortar) will be as required in Section 1010.

SECTION 3

ASPHALT PAVEMENT DESIGN

3.1 DESIGNING AN ASPHALT PAVEMENT STRUCTURE (THICKNESS)

Pavements constructed of hot-mix asphalt are typically designed based on traffic projections over a 20 year period. Yet despite our best efforts, it is not uncommon to see severe rutting and cracking in asphalt pavements well before then as environmental conditions and heavy traffic loading take their toll. The result: rougher rides, higher user costs, higher pavement maintenance and rehabilitation costs, and more work zones for motorists to negotiate. In order to provide a pavement which will serve its intended purpose for a reasonable time at a reasonable costs, Engineers must utilize proper design procedures based on projected traffic over the design period and consider the environmental conditions, subgrade strength, material properties and other factors that will allow construction of a pavement that will perform satisfactorily. When designing and building a road for all-weather use by vehicles, the basic objectives are to:

(a) Have sufficient total thickness and internal strength to carry expected traffic loads.
(b) Prevent the penetration and/or internal accumulation of moisture, and
(c) Have a top surface that is smooth, skid resistant, and resistant to wear, distortion and deterioration by traffic, weather and deicing chemicals.

The subgrade ultimately carries all traffic loads; therefore, the structural function of a pavement is to support a wheel load on the pavement surface and transfer and spread that load to the subgrade, without over-taxing either the strength of the subgrade or the internal strength of the pavement itself. Figure 3-1 shows the wheel load being transmitted to the pavement surface through the tire. The pavement then spreads the wheel load to the subgrade which reduces the stress applied to the subgrade. Figure 3-2 shows how a wheel load, W, slightly deflects the pavement structure, causing both tensile and compressive stresses within the pavement. By proper selection of pavement materials and with adequate pavement thickness and strength, the stress at the bottom of the pavement will be small enough to be easily supported by the subgrade and the pavement will be able to resist the internal stresses caused by the loading.

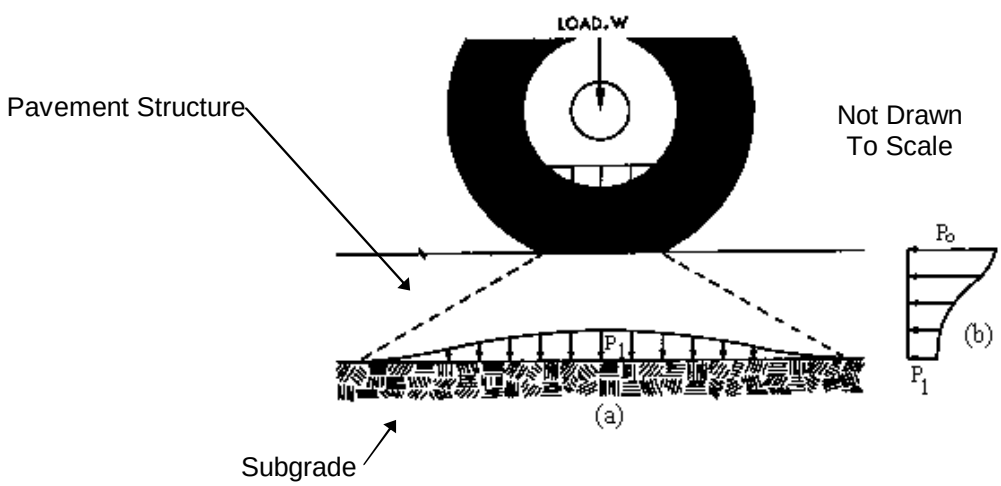

Fig. 3-1: Spread of wheel-load through pavement structure

In determining pavement thickness, the following factors are considered:

(a) Traffic - The amount of traffic predicted to use the facility. The number of trucks predicted to use the highway is particularly important, as one pass of a tractor-trailer truck equals approximately 4,000 passenger vehicles,

(b) Soil Support Value - The soil subgrade strength, i.e., the type of soil of which the subgrade is composed - sand, clay, silt, etc,

(c) Regional Factor - Accounts for the effect of various climatic conditions. For instance, the effect and number of freeze-thaw cycles in the mountain region will require a thicker pavement structure than the milder climate in the eastern part of the state, and

(d) Strength and other influencing characteristics of the materials available or chosen or the layers or courses in the total asphalt pavement structure.

(e) Economics

From these factors, a structural number is calculated. The structural number is an index number derived from an analysis of traffic, soil conditions, and regional factors. This number is used to determine the thickness of the total pavement and the thickness of the various layers. The following is a relative comparison of strength of various asphalt mix layers to each other and to other base types:

- 1 inch (25 mm) asphalt surface or intermediate layer ≅ 1½ inches (37.5 mm) asphalt base
- 1 inch (25 mm) asphalt surface or intermediate layer ≅ 3 inches (75 mm) aggregate base course
- 1 inch (25 mm) asphalt surface or intermediate layer ≅ 2 inches (50 mm) cement treated ABC

Obtaining the specified thickness of each pavement layer during construction is critical in order for the pavement to perform for the design life. As pavement thickness increases, small increases greatly extend the pavement life. For instance, one half inch (12.5 mm) less surface course potentially can reduce the pavement life from 20 years to 15 years. Therefore, the roadway technicians should be aware of the thickness required of each layer as specified by the plans and typical sections and the importance of obtaining that thickness in the completed pavement structure.

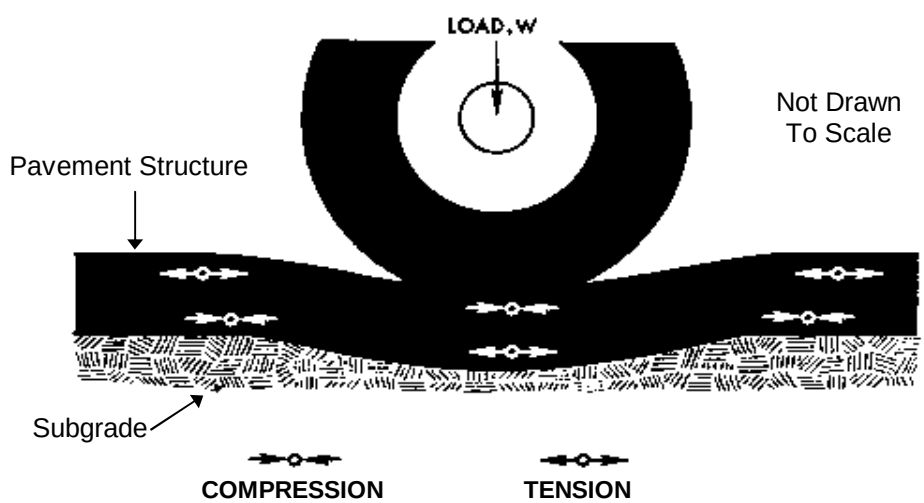

Figure 3-2: Pavement deflection results in tensile and compressive stresses in pavement structure

3.2 ASPHALT MIX TYPES

An asphalt pavement structure consists of all courses or layers above the prepared subgrade or foundation. The upper or top layer(s) is the asphalt surface course. The surface course(s) may range from less than an inch (25mm) to several inches (mm) in thickness. The surface course is a high density layer designed to prevent penetration or internal accumulation of moisture. It is also designed to be skid resistant, resistant to wear, distortion, and deterioration by traffic, weather and deicing chemicals and is made using a relatively small maximum size aggregate. The layer placed immediately below the surface course is the intermediate course. The intermediate course is a high density material and is made using a slightly larger maximum size aggregate. When the expected traffic is very high or other conditions dictate, an asphalt base course may be utilized. The base is also a high density material and is made using an even larger maximum size aggregate. The base is an important structural strength element of a pavement. Its main purpose is to distribute traffic wheel loads over the subgrade and, therefore, is almost entirely designed for that purpose. Base course mixes can be constructed in relatively thick layers at a reasonable cost due to the large aggregate size and therefore, require a lower asphalt binder content. The thickness of the base course is usually dependent upon the overall strength requirements for a particular pavement based upon the anticipated traffic loading.

Listed in the following table are the asphalt mix types. The first letter of the mix type designation indicates the type of mix (Surface, Intermediate and Base), the number indicates the nominal aggregate size in millimeters, and the letter at the end indicates the level of traffic loading which the mix is designed to carry with satisfactory performance. Traffic loading is expressed in Equivalent Single Axle Loads (ESALs). As an example, an S 12.5 C mix is a surface mix with a nominal maximum aggregate size of 12.5 mm and a design loading of 3 to 30 million ESALs and will be produced using a PG 70-22 asphalt binder.

TABLE 3-1
MIX TYPES

Mix Type	General Use	ESAL Range (Million)	Binder PG Grade
SA-1	Surface Course	Less than 0.3	64-22
S 4.75A	Surface Course	Less than 1.0	64-22
SF 9.5A	Surface Course	Less than 0.3	64-22
S 9.5B	Surface Course	0.3 to 3	64-22
S 9.5C	Surface Course	3 to 30	70-22
S 9.5D	Surface Course	More than 30	76-22
S 12.5C	Surface Course	3 to 30	70-22
S 12.5D	Surface Course	More than 30	76-22
I 19.0B	Intermediate Course	Less than 3	64-22
I 19.0C	Intermediate Course	3 to 30	64-22
I 19.0D	Intermediate Course	More than 30	70-22
B 25.0B	Base Course	Less than 3	64-22
B 25.0C	Base Course	More than 3	64-22

3.3 PAVEMENT LAYER DEPTH GUIDELINES (FOR PAVEMENT DESIGN PURPOSES)*

A. Single Lift Depths (Minimum – Maximum) **

- SA-1 = 0.5 - 1.0 in (12.5 - 25 mm)
- S 4.75A = 0.5 - 1.0 in (12.5 - 25 mm)
- SF 9.5A = 1.0 - 1.5 in (25 - 40 mm)
- S 9.5X = 1.5 - 2.0 in (40 - 50 mm)
- S 12.5X = 2.0 - 2.0 in (50 - 50 mm)
- I 19.0X = 2.5 - 4.0 in (65 - 110 mm)
- B 25.0X = 3.0[(1)] - 5.5 in (75[(1)] - 140 mm)

[(1)] For B 25.0 X placed on unstabilized subgrade, minimum lift thickness is 4.0 in. (100 mm)

B. Maximum Layer Total Depths**

- SA-1 = 2.0 in (50 mm)
- S 4.75A = 2.0 in (50 mm)
- SF 9.5A = 3.0 in (80 mm)
- S 9.5X = 3.0 in (80 mm)
- S 12.5X = 4.0 in (100 mm)
- I 19.0X = 4.0 in (110 mm) except 4.5 in (120 mm) for C & G Section
- B 25.0X = No Restrictions

Notes:

* From "Interim Pavement Design Procedure, Pavement Layer Depths (Superpave Mixes)", Published by NCDOT Pavement Management Unit.

** Minimum layer thickness is at least 3 times the nominal maximum aggregate size.

3.4 APPLICATION RATES OF SPREAD PER INCH (mm) DEPTH

Mix Type	Rate lbs/SY/Inch
SA-1	100
S 4.75 A	100
SF 9.5 A	110
S 9.5 B, C, D	112
S 12.5 C, D	112
I 19.0 B, C, D	114
B 25.0 B, C	114

Note: Always refer to the contract and/or typical sections for the specified average rate and approximate depth to be placed.

3.5 TYPICAL SINGLE LAYER DEPTHS / RATES

Layer Type	*Thickness/Rate (English)
SA-1	0.5 in @ 50 lbs/sy
S 4.75A	0.5 in @ 50 lbs/sy
SF 9.5A	1.00 in @ 110 lbs/sy
S 9.5 X	1.50 in @ 168 lbs/sy
S 12.5 X	2.00 in @ 224 lbs/sy
I 19.0 X	2.50 in @ 285 lbs/sy
B 25.0 X	3.00 in @ 342 lbs/sy

*****Approximate Minimum Thickness

3.6 TYPICAL ASPHALT BINDER CONTENTS*

PG 64-22		PG 70-22		PG 76-22	
S 4.75 A	6.8%	S 9.5 C	5.9%	S 9.5 D	5.7%
				S 12.5 D	5.2%
SF 9.5 A	6.7%	S 12.5 C	5.6%	OGAFC, Type FC-1 Modified	6.1%
S 9.5 B	6.0%	I 19.0 D	4.5%		
I 19.0 B & C	4.8%				
B 25.0 B & C	4.4%			OGAFC, Type FC-2 Modified	6.1%
OGAFC, Type FC-1	6.1%				
PADC, Type P-57	2.5%				
PADC, Type P-78M	3.0%				

***** By Weight of Total Mix

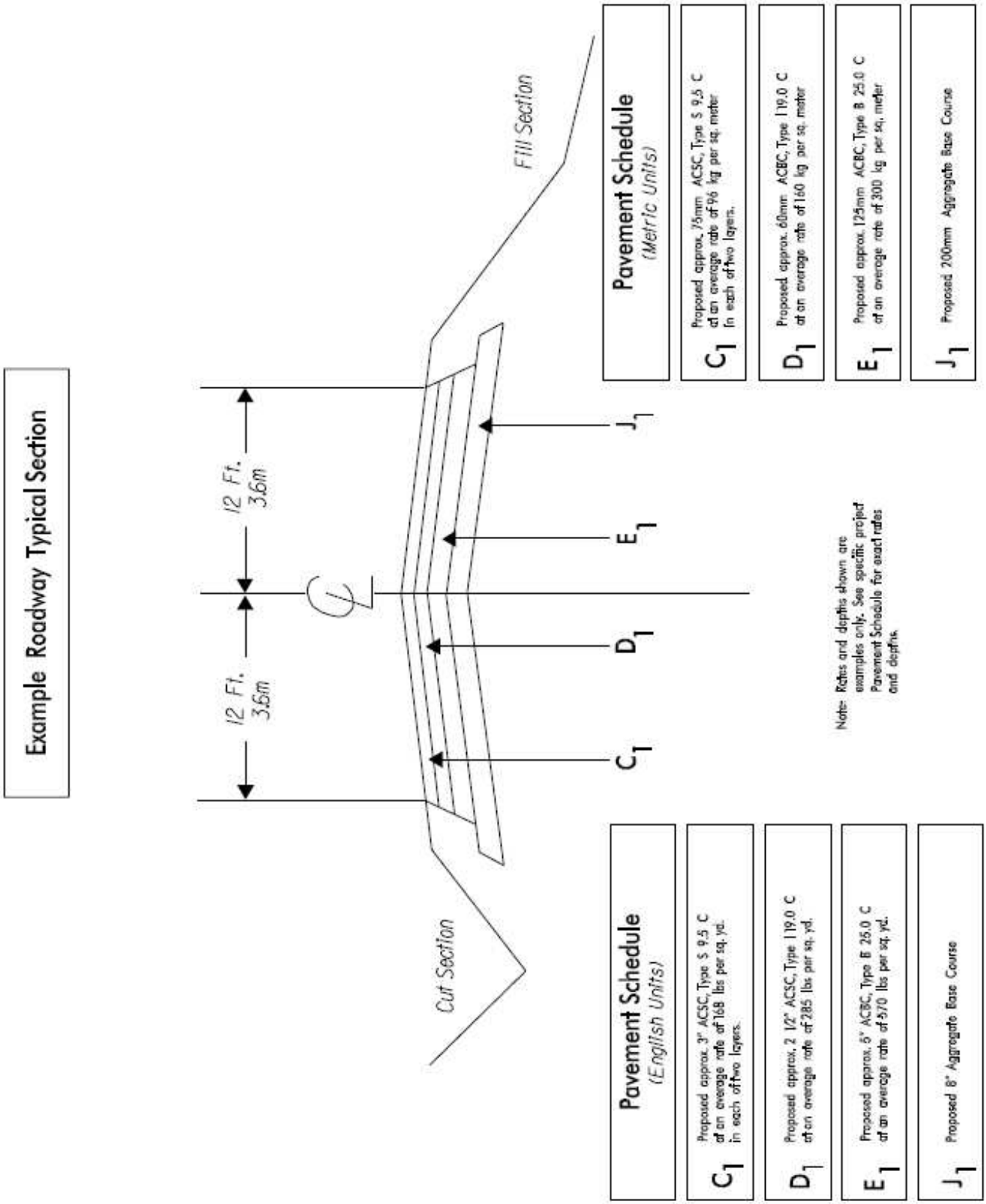
Example Roadway Typical Section
12 Ft.
3.6m
12 Ft.
3.6m
Cut Section
Fill Section
C_1
D_1
E_1
J_1
Pavement Schedule
(English Units)
C_1 Proposed approx. 3" ACSC, Type S 9.5 C at an average rate of 168 lbs per sq. yd. in each of two layers.
D_1 Proposed approx. 2 1/2" ACSC, Type I 19.0 C at an average rate of 285 lbs per sq. yd.
E_1 Proposed approx. 5" ACBC, Type B 25.0 C at an average rate of 570 lbs per sq. yd.
J_1 Proposed 8" Aggregate Base Course
Note: Rates and depths shown are examples only. See specific project Pavement Schedule for exact rates and depths.
Pavement Schedule
(Metric Units)
C_1 Proposed approx. 75mm ACSC, Type S 9.5 C at an average rate of 96 kg per sq. meter in each of two layers.
D_1 Proposed approx. 60mm ACBC, Type I 19.0 C at an average rate of 160 kg per sq. meter
E_1 Proposed approx. 125mm ACBC, Type B 25.0 C at an average rate of 300 kg per sq. meter
J_1 Proposed 200mm Aggregate Base Course

SECTION 4

ASPHALT MIX DESIGN AND JOB MIX FORMULAS

4.1 INTRODUCTION

As stated in Section 2 of this manual, an asphalt mixture is composed of three (3) basic components: 1) asphalt binder, 2) aggregates and 3) air voids. Mineral filler, additives, and other modifiers are used when needed or required. The asphalt material, which can be asphalt binder, modified asphalt binder, emulsified liquid asphalt or some other form of asphaltic material, acts as a binding agent to glue the aggregate particles into a cohesive mass. Asphalt Concrete, sometimes referred to as hot mix asphalt (HMA) is a paving material that consist primarily of asphalt binder and mineral aggregate and is mixed in a hot mix plant or by some other procedure. When bound by the asphalt binder, the mineral aggregate acts as a stone framework to impart strength and toughness to the system. Because it is relatively impervious to water, the asphalt binder also functions to waterproof the mixture. Because HMA contains both asphalt binder and mineral aggregate, the volumetric properties and subsequently the behavior of the mixture is affected by the properties of the individual components and how they react with each other in the system. In order to determine if the behavior and performance of the mixture under traffic will be satisfactory, a mix design must be performed to determine the proper combination of the individual materials prior to beginning mix production.

4.2 PURPOSES OF MIX DESIGNS

While there are many types of asphalt mixtures used in highway construction, there are three basic types: surface mixes, intermediate mixes and base mixes. The specifications for Superpave asphalt plant mixes cover each type in more detail than we are here, but it is well to note that each type has a specific purpose and location within an asphalt pavement structure.

As noted above, there are certain properties and performance characteristics that are desirable in an asphalt mix. The relative proportions of aggregate, asphalt binder, and air voids significantly affect the physical properties of the mix and ultimately, how it will perform as a finished pavement. While it would be very easy to "mix some asphalt with some rock", this very likely would result in a poor quality mix. Designing asphalt mixes, as with other engineering materials designs, is largely a matter of selecting and proportioning materials to obtain the desired qualities and properties in the finished construction. The overall objective is to determine an economical blend and gradation of aggregates (within the specification limits) and a corresponding asphalt content that yields a mix having:

(a) Sufficient asphalt to ensure a durable pavement by thoroughly coating the aggregate particles and waterproofing and bonding them together under suitable compaction.

(b) Sufficient mix resistance to permanent deformation to satisfy the service requirement and demands of traffic without distortion or displacement.

(c) Sufficient voids in the total compacted mix to provide for a slight additional amount of compaction under traffic loading without bleeding and rutting, yet be low enough to keep out excessive air and moisture.

(d) Sufficient workability to permit efficient placement and proper compaction operations without segregation.

4.3 PERFORMANCE CHARACTERISTICS CONSIDERED IN MIX DESIGN

Hot-mix asphalt pavements function properly when they are designed, produced and placed in such a manner as to give them certain desirable performance characteristics. These characteristics contribute to the quality of hot-mix pavements. These include permanent deformation (rutting) resistance, durability, flexibility, fatigue resistance, skid resistance, impermeability, workability and economics.

Ensuring that a paving mixture has each of these properties is a major goal of the mix-design procedure. Therefore, the technician should be aware of what each of the properties is, how it is evaluated, and what it means in terms of pavement performance. These properties are discussed below.

4.3.1 Permanent Deformation (Rut Resistance)

The ability of an asphalt mix to resist permanent deformation from imposed loads. Unstable mixes are marked by channeling (ruts), corrugations (washboarding), pushing and shoving in the pavement. Rut resistance is dependent upon both internal friction of aggregate and cohesion within the mix.

Internal friction is dependent on particle shape, surface texture, gradation of aggregate, density of mix, binder grade and quantity of asphalt. Rut resistance results from a combination of the frictional forces within the aggregate structure and the interlocking resistance of the aggregate in the mix. Frictional resistance increases with the surface roughness of the aggregate particles and with the area of particle contact. Interlocking resistance is dependent upon particle size and shape.

Contrasting Aggregate Structures

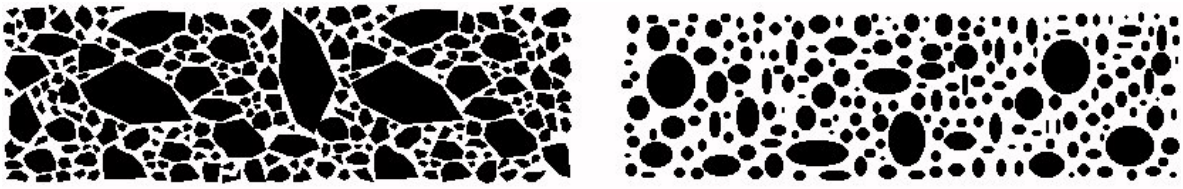

Cubical Aggregate **Rounded Aggregate**

The figure above demonstrates that with more angular (cubical) particle shape and more contact between particles greater resistance to rutting and permanent deformation is achieved.

For any given aggregate, the rut resistance increases with the density of the confined particles, which is achieved by dense gradations and adequate compaction. Excessive asphalt in the mix tends to lubricate the aggregate particles and lower the internal friction of the stone framework.

Cohesion is that binding force that is inherent in the asphalt mixes. The asphalt serves to maintain contact pressures developed between aggregate particles. Cohesion varies directly with the rate of loading, loaded area, and viscosity of the asphalt. It varies inversely with the temperature. Cohesion increases with increasing asphalt content up to a maximum point and then decreases.

4.3.2 Durability

Durability is how well an asphalt mix resists disintegration by weathering and traffic. Included under weathering are changes in the characteristics of asphalt such as oxidation, volatilization and changes in the pavement and aggregate due to the action of water, including stripping, freezing and thawing.

Durability is generally enhanced by high asphalt contents, dense aggregate gradations, and well-compacted, impervious mixes. One argument for an increased amount of asphalt is the resultant thicker

asphalt film coating around the aggregate particles. Thicker films are more resistant to age-hardening. Another reason for an increased amount of asphalt is to reduce the pore size of the interconnected voids or to seal them off in the mix, making it more difficult for air and water to enter the interior of the mix and cause damage. To resist the action of water, the same requirements (dense-graded aggregates, high asphalt contents, and adequate compaction) apply. It is desirable to use aggregates that retain an asphalt coating in the presence of water.

Sufficient asphalt must be incorporated in the mix to provide bonding properties adequate to resist the abrasive forces of traffic. Insufficient asphalt may result in aggregate being dislodged from the surface. This is known as raveling. Abrasion may also take place if the asphalt has become brittle. Overheating of asphalt in the hot-mixing process is a cause of brittleness, which leads to pavement disintegration.

A mix having a high asphalt content with voids completely filled with asphalt would provide the ultimate in durability. However, this would be undesirable from the standpoint of rut resistance. When placed in the roadway, the mix would rut and displace under traffic. Bleeding or flushing of asphalt to the surface would also take place, thereby reducing skid resistance. Maximum rut resistance is not reached in an aggregate mass until the amount of asphalt coating the particles has reached some critical value. Additional asphalt then tends to act as a lubricant rather than a binder, reducing rut resistance of the mix, even though durability may be increased. It is necessary to compromise by keeping the asphalt content as high as possible while maintaining adequate rut resistance.

4.3.3 Flexibility

The ability of an asphalt mix to conform to gradual settlements and movements of the base and subgrade. Differential settlements in the fill embankment occasionally occur. Thus, it is impossible to develop uniform density in the subgrade during construction because sections or portions of the pavement tend to compress and settle under traffic. Therefore, the asphalt pavement must have the ability to conform to localized and differential settlement without cracking. Generally, flexibility of the asphalt mix is enhanced by high asphalt content and relatively open-graded aggregates.

4.3.4 Fatigue (Cracking) Resistance

The ability of asphalt pavement to withstand repeated flexing of the pavement structure caused by the passage of wheel loads. Tests have shown that the quantity of asphalt is extremely important when considering the fatigue resistance of a pavement. As a rule, the higher the asphalt content, the greater the fatigue resistance. Tests indicate that low air-void content asphalt mixes have more fatigue resistance than higher air-void content mixes. Well-graded aggregates that permit higher asphalt content without causing flushing or bleeding in compacted pavement should be incorporated in the mix.

4.3.5 Skid Resistance

The ability of an asphalt surface, particularly when wet, to provide resistance to slipping or skidding of vehicles. The factors for obtaining high skid resistance are generally the same as those for obtaining high stability. Proper asphalt contents and aggregates with a rough surface texture are the greatest contributors. However, not only must the aggregate have a rough surface texture, it must also resist polishing. Aggregates containing non-polishing minerals with different wear or abrasion characteristics provide continuous renewal of the pavement's texture, maintaining a skid-resistant surface. Examples of non-polishing aggregates are granites, crushed gravel, silica sands and slag. An example of a polishing type aggregate is limestone.

Mixes so rich in asphalt as to fill the voids in the compacted pavement will probably cause asphalt to flush to the surface, which is called bleeding. Asphalt on pavement surface can cause slippery conditions.

4.3.6 Impermeability

The ability an asphalt pavement to provide resistance to the passage of air and water into or through the pavement. While the void content may be an indication of the susceptibility of a compacted mix to the passage of air and water; of more significance is the interconnection of voids and their access to the surface. Imperviousness to air and water is extremely important from the standpoint of lasting durability.

4.3.7 Low Temperature / Shrinkage Cracking

The ability of an asphalt pavement to resist low temperature/shrinkage cracking. Low temperature/shrinkage cracking is caused by adverse environmental conditions rather than applied traffic loads. It is characterized by surprisingly consistently spaced transverse cracks (perpendicular to the direction of traffic). It is caused by a build-up of tensile stresses as the pavement shrinks due to extremely cold weather or due to shrinkage caused by oxidation (aging) of the pavement. Hard asphalt binders or binders which have hardened (oxidized) due to high void content in the as constructed mix are more prone to low temperature cracking.

4.3.8 Workability

The ease with which an asphalt mix may be placed and compacted. With careful attention to proper design and with the use of machine spreading, workability is not a problem. At times, the properties of the aggregates that promote high rut resistance make asphalt mixes containing these aggregates difficult to spread or compact and may promote segregation. Since workability problems are discovered most frequently during the paving operation, mix design adjustments should be made quickly to allow the job to proceed as efficiently as possible.

4.3.9 Economics

The cost of the in-place pavement must be considered. Mix components, production and placement costs, haul distances, safety considerations, quality, expected pavement performance and other factors need to be evaluated when selecting the final mix design.

4.4 THE SUPERPAVE MIX DESIGN SYSTEM

The Superpave mix design system is based on volumetric proportioning of the asphalt and aggregate materials and laboratory compaction of trial mixes using the Superpave Gyratory Compactor (SGC). The basic mixture design procedures in Superpave consist of an evaluation of the following characteristics once the type and amount of traffic and the environmental conditions under which the pavement will be expected to perform have been determined:

1. aggregate properties and gradation requirements,
2. asphalt grade selection and requirements,
3. mixture volumetric properties and requirements,
4. dust proportion (dust to effective binder ratio),
5. moisture susceptibility, and
6. permanent deformation (rutting resistance)

4.4.1 Aggregate Properties and Gradation Requirements

Aggregate physical properties for Superpave mixes are specified on the basis of both "consensus" (blend) properties and "source" (individual) properties. These criteria are discussed in more detail in Section 2 of this manual.

To specify gradation, Superpave uses a 0.45-power gradation chart with control points on various sieves to define a permissible gradation of the designated mix type. Control points function as master ranges through which gradations must pass. Control points are placed at the nominal maximum size sieve, an intermediate size sieve (2.36 mm), and the smallest sieve (0.075 mm). The control points vary, depending on the nominal maximum size of the mix.

This chart uses a unique graphing technique to judge the cumulative particle size distribution of an aggregates blend. The vertical axis of the chart is the percent passing. The horizontal axis is an arithmetic scale of sieve sizes in millimeters, raised to the 0.45 power (See Example 0.45-power chart included in the example mix design later in this section of the manual).

An important feature of the 0.45-power chart is the maximum density gradation. This gradation plots as a straight line from the maximum aggregate size through the origin. Superpave uses a standard set of ASTM sieves and the following definitions with respect to aggregate size.

- Maximum Size: One sieve size larger than the nominal maximum size.
- Nominal Maximum Size: One sieve size larger than the first sieve to retain more than 10 %

(Superpave defines mixture types in terms of their nominal maximum aggregate size; for example, an I 19.0C mix has a nominal maximum aggregate size of 19.0 mm.)

The maximum density gradation represents a gradation in which the aggregate particles fit together in their most dense possible arrangement. In general, this is a gradation to avoid because there will most likely be inadequate void space within the aggregate structure to allow adding adequate asphalt binder in order to develop sufficiently thick asphalt films for a durable mixture and still maintain the desired air void content.

The design gradation should lie between the control points and meet the Superpave aggregate gradation requirements detailed in Table 610-1 (Fig. 4-2) of this Manual.

4.4.2 Asphalt Binder Grade Selection and Requirements

The Superpave binder grade selection process utilizes procedures that directly relate laboratory analysis with laboratory performance. In general, Superpave mix design guidelines specify that the binder grade to be used in a mix be initially selected based on the climate (average high and average low temperatures), in which the pavement will be performing. The guidelines then recommend the high temperature grade be adjusted (upward) based on other factors, such as the amount and type of traffic loading, operating speed of the traffic, and position of the pavement layer within the pavement structure. The designation, called **P**erformance **G**rading (**PG**) contains two temperatures: the average 7 day high pavement temperature and the average 7 day low temperature. The high temperature is important because rutting failure occurs when the pavement is hot and becomes soft. Two other effects that increase rutting potential are very high traffic or very slow traffic. These factors increase the likelihood of rutting, and by raising the specified high temperature of the binder, the rut resistance will increase. The low temperature number indicates the low temperature cracking properties of the binder. The lower the second number, the greater the ability the binder has to resist cracking due to shrinkage caused by freeze/thaw cycles.

PG 64-22 was selected as the "standard" grade for North Carolina based on climatic conditions.

These guidelines have been taken into consideration when specifying the binder grades to be used in the various mixes used in North Carolina. See Table 610-3 (Fig. 4-3) for the PG binder grade required for the various mix types specified by NCDOT.

4.4.3 Mixture Volumetric Properties and Requirements

A major factor that must be taken into account when considering asphalt mixture behavior is the volumetric properties of the mixture. Mixture volumetric requirements consist of air voids (VTM), voids in the mineral aggregate (VMA), voids filled with asphalt (VFA) and effective asphalt content (P_{be}). These volumetric properties for NCDOT mixes are illustrated in Figure 4.1.

Air void content (VTM) is an extremely important property because it is used as the basis for selecting the asphalt binder content. In Superpave, the design air void content is usually 4.0 %; however, the mix designer should always check the specifications.

Superpave defines voids in the mineral aggregate (VMA) as the sum of the volume of air voids and effective (i.e., unabsorbed) binder in a compacted sample. It represents the void space between the aggregate particles. Specified minimum values for VMA at the design air void content of 4.0 % are a function of nominal maximum aggregate size. Table 610-3 (Fig. 4-3) shows Superpave VMA requirements.

Voids filled with asphalt (VFA) is defined as the percentage of the VMA containing asphalt binder. Consequently, VFA is the volume of effective asphalt binder expressed as a percentage of the VMA. The acceptable range of design VFA at 4.0 % air voids is a function of traffic level as shown in Table 610-3 (Fig. 4-3).

Effective asphalt content (P_{be}) is defined as the total asphalt content of a paving mixture minus the portion of asphalt absorbed into the aggregate particles (See Figure 4.1).

Obtaining the correct air void content is critical in both mix design and the in-service performance of a pavement. As discussed in Section 2, asphalt binder expands and contracts with variations in-temperature. In hot weather, air voids in the mix provide room for the expanding asphalt binder. If there are not enough voids within the mix to allow for the expansion, the asphalt binder expands to fill all existing voids, and then begins pushing the aggregate particles apart, reducing aggregate interlock and contact friction. This causes the pavement to become unstable, more susceptible to pushing, shoving, and rutting. The binder eventually may bleed or flush to the surface. This significantly reduces the skid resistance of the pavement.

Imperviousness to air and water is extremely important for the mix to be and remain durable. If the air void content is too high, the air voids may interconnect and allow water and air to penetrate into the mix. Water penetration may cause the asphalt binder to strip from the aggregate. Exposing asphalt binder to both water and air will cause it to oxidize more rapidly, causing it to become hard and brittle, and therefore resulting in early fatigue failure.

4.4.4 Dust to Effective Binder Ratio

Another mixture requirement is the dust to effective binder ratio. This is computed as the ratio of the percentage by weight of aggregate finer than the 0.075 mm sieve (by washing) to the effective asphalt content expressed as a percent by weight of total mix. Effective binder content is the total binder used in the mixture less the percentage of absorbed binder. Dust / Binder Ratio is used during the mixture design phase as a design criteria. Specifications require the dust / effective binder ratio to be in the range of 0.6 to 1.4, inclusive, for all NCDOT Superpave mixtures.

4.4.5 Moisture Susceptibility

Moisture Susceptibility, also known as *stripping,* is the separation of the asphalt film from the aggregate through the action of water and may make an aggregate material unsuitable for use in asphalt paving mixes. Such material is referred to as hydrophilic (water loving). Siliceous aggregates such as quartzite and some granites are examples of aggregates that may require evaluation of stripping potential. Aggregates that exhibit a high degree of resistance to asphalt film stripping in the presence of water are usually most suitable in asphalt paving mixes. Such aggregates are referred to as hydrophobic (water hating) aggregates. Limestone, dolomite, and traprock are usually highly resistant to asphalt film stripping. Why hydrophobic or hydrophilic aggregates behave as they do is not completely understood. The explanation is not as important as the ability to detect the properties and avoid use of aggregates conductive to asphalt stripping.

The moisture susceptibility test used to evaluate HMA for stripping is AASHTO T 283, "Resistance of Compacted Bituminous Mixtures to Moisture Induced Damage." This test serves two purposes. First, it identifies whether a combination of asphalt binder and aggregate is moisture susceptible. Second, it measures the effectiveness of anti-stripping additives.

4.4.6 Permanent Deformation (Rut Resistance)

One of the major objectives of Superpave Mix Design System is to provide pavements which would be highly resistant to permanent deformation (rut resistance). As stated earlier, rut resistance is the ability of an asphalt mix to resist permanent deformation from imposed loads. This is especially important for surface mixes since this is where the wheel loads are concentrated and the potential for rutting is greatest. The aggregate and binder specifications are established such that a rut resistant mix should be obtained; however, once a mix has been designed based on the specified criteria, the mix should be physically tested to evaluate the anticipated performance under traffic. To accomplish this objective the Department will perform rut resistance evaluation on surface mix specimens prepared by the Contractor as a part of the mix design process.

In addition to the required mix design submittal forms, the Contractor will prepare and deliver six (6) Superpave Gyratory Compactor specimens to the Department's Central Asphalt Laboratory for the following surface mix types: SF 9.5A, S 9.5B, S 9.5C, S 9.5D, S 12.5C and S 12.5D. The Contractor will prepare these specimens using lab produced mix in accordance with AASHTO T 312 (Modified). These specimens shall be compacted to a height of 75 ± 2 mm and to a void content (VTM) of 4.0% ± 0.5%. These specimens will be tested for rutting susceptibility using the Asphalt Pavement Analyzer in the Materials and Tests Central facility. The maximum rut depth allowed for the various surface mixes is specified in Table 610-3 (Fig. 4-3).

MIXTURE VOLUMETRIC PROPERTIES AND RELATIONSHIPS

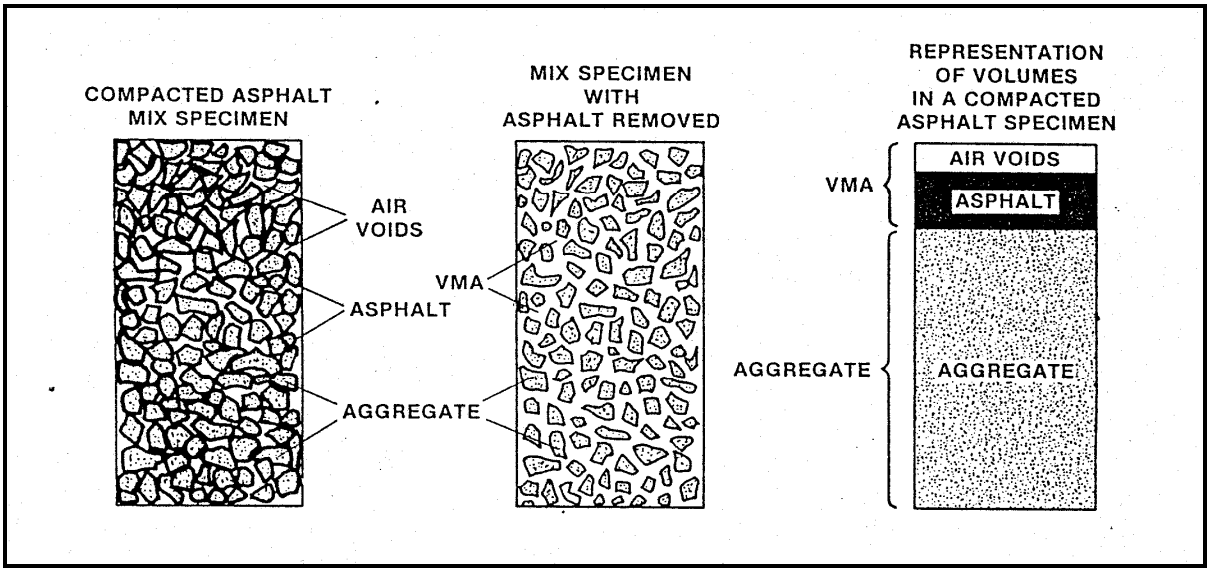

Illustration of VMA in a Compacted Mix Specimen
(Note: For simplification the volume of absorbed asphalt is not shown.)

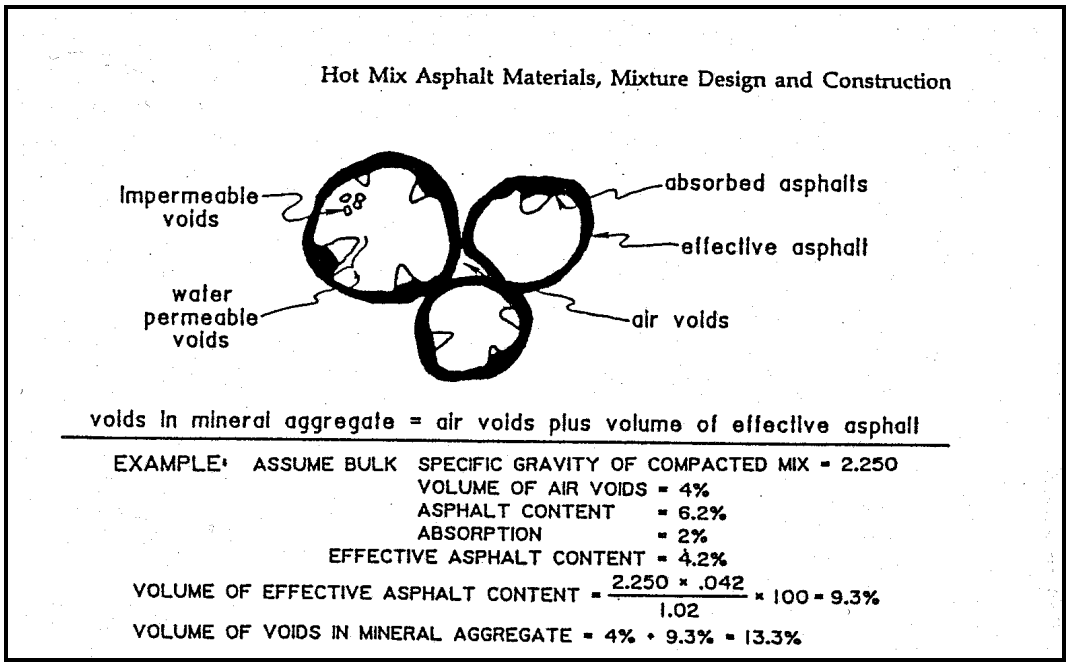

Diagram Illustrating the Air Voids and Voids in Mineral Aggregate (VMA)
Figure 4.1

4.5 NCDOT MIX DESIGN PROCEDURES

The Contractor is required to design the asphalt mix and to obtain an approved Job Mix Formula (JMF) issued by the Department. A mix design and proposed JMF targets for each required mix type and combination of aggregates must be submitted both in writing and in electronic format to the NCDOT Asphalt Design Engineer for review and approval at least 10 days prior to start of asphalt mix production.

The mix design must be prepared in an approved mix design laboratory by a certified Superpave mix design technician. The design laboratory must be approved by the Asphalt Design Engineer prior to submission of the mix design. The mix design shall be prepared in accordance with AASHTO R 35, "Standard Practice for Designing Superpave HMA" as modified by the Department, recommended procedures in the Asphalt Institute publication "Superpave Series No. 2 (SP-2, 3rd edition) Mix Design Manual" and the latest edition of Department mix design computer programs, policies, procedures, and forms. The request for the MD/JMF approval will be submitted to the Mix Design Engineer on Form QMS-1 (See Page 4-19) with attached design data, proposed JMF target values, and forms as noted. In addition, the Contractor is required to submit the design data in electronic form using the Department's mix design program.

Prepare all proposed mix design data in accordance with Department policies and procedures including but not limited to, the following information:

(1) Source and percentage of each aggregate component to be used in the design aggregate blend gradation, including RAP and RAS.
(2) Percentage of asphalt binder in RAP and RAS.
(3) Gradation of each aggregates component, including RAP and RAS.
(4) The following aggregate properties: current bulk specific gravity (G_{sb}), current apparent specific gravity (G_{sa}) and absorption of the individual aggregate components to be used when tested in accordance with AASHTO T 84 and T 85, except report the effective bulk specific gravity (G_{se}) of RAP and RAS aggregate as determined by AASHTO T 209. Report coarse aggregate angularity, fine aggregate angularity, flat and elongated percentages, and sand equivalent for the total aggregate blend.
(5) Source(s), modification method, and percent of modifier by weight of asphalt binder, if modified.
(6) Supplier, source, grade, and equi-viscous mixing and compaction temperatures of the asphalt binder. Determine equi-viscous temperatures using the rotational viscometer in accordance with ASTM D4402 corresponding to the following recommended viscosity ranges:

    Range for mixing = 0.150 to 0.190 Pa-s
    Range for compaction = 0.250 to 0.310 Pa-s

    When PG 76-22 or other modified binders are used, base the temperatures on the documented supplier's recommendations.
(7) Brand name, manufacturer, shipping point, and percentage of anti-strip additive used in the mix design. Determine TSR data in accordance with AASHTO T 283 as modified by the Department.
(8) Target value for percent passing each standard sieve for the design aggregate gradation. Data will show the percent passing for all standard sieves listed in Table 610-1 for the specified mix type. Show the percentages in units of one percent of aggregate passing, except for the 0.075 mm (No. 200) sieve, show in units to one-tenth of one percent. Base percentages on the dry weight of aggregate determined in accordance with AASHTO T 11 and T 27.
(9) Volumetric properties of the compacted mixture calculated on the basis of the mixture's maximum specific gravity as determined by AASHTO T 209. The mixture shall be aged in accordance with

AASHTO R 30 and the bulk specific gravity of specimens determined by AASHTO T 166, Method A, for each asphalt content tested. Determine and report properties in accordance with the requirements of AASHTO R 35 except as modified herein, and Department Mix Design Policies and Procedures.

(10) Graphical plots of percent asphalt binder by total weight of mix (P_b) versus the following properties at the design number of gyrations, N_{des}, specified

(a) SGC bulk gravity, G_{mb} @ N_{des}
(b) % G_{mm} @ N_{ini}
(c) Voids in total Mix (VTM)
(d) Voids Filled With Asphalt (VFA)
(e) Voids in Mineral Aggregate (VMA)
(f) % Compaction vs. Log of Gyrations

(11) Graphical plot of the design aggregate gradation (design blend) on FHWA 0.45 power chart showing the applicable control points, and maximum density line. Plot all standard sieves for the applicable mix type.

(12) Proposed target value of asphalt binder content by weight of total mix and specification design properties at that percentage.

(13) TSR test data in accordance with AASHTO T 283 (Modified).

When the mix design is submitted, include the original recording charts detailing the TSR results to Asphalt Design Engineer in accordance with Section 7.14 of this Manual. In addition, when requested by the Asphalt Design Engineer, the Contractor must submit representative samples of each mix component, including RAP, RAS, mineral filler, asphalt binder, chemical anti-strip additive and hydrated lime to the Department's mix design laboratory.

In addition, the Contractor will prepare and deliver six (6) Superpave Gyratory Compactor specimens to the Department's Central Asphalt Laboratory for the following surface mix types: S4.75A, SF9.5A, S 9.5B, S 9.5C, S 9.5D, S 12.5C and S 12.5D. These specimens are used for rut testing.

4.6 THE JOB MIX FORMULA

NCDOT Specifications require that all asphalt plant mixes, either virgin or recycled, be proportioned and graded such that they meet the requirements of a job mix formula approved and issued by the Department. This job mix formula will be based on a mix design performed by the Contractor and approved by the Materials and Tests Asphalt Lab. Once the Asphalt Design Engineer has evaluated and/or confirmed the data, the mix design will be approved if it meets specifications. The mix design and job mix formula target values must be within the design criteria for the particular type of asphalt mixture specified. The source and grades of material, blend proportions of each of the various aggregates used, specific gravity information, and other applicable data and notes will be given on the formula. Specific details on "Master" job mix formula procedures are discussed below.

Once the JMF has been approved and production is ready to begin, the component materials must be combined in such proportions that the completed mixture meets the specification requirements for the particular mix type specified. During production the materials are heated and blended together in a hot mix asphalt plant such that the mixture is uniformly mixed and coated with asphalt binder. The mixture is then transported to the roadway where it is spread, finished and compacted to the required grades, thickness and typical section required by the plans and contract.

The job mix formula (JMF) gradation target values will be established within the design criteria specified for the particular type of asphalt mixture to be produced. The JMF asphalt binder content will be established at the percentage which will produce voids in total mix (VTM) at the midpoint of the specification design range for VTM, unless otherwise approved. The formula for each mixture will establish the following: blend percentage of each aggregate fraction, the percentage of reclaimed aggregate, if applicable, a single percentage of combined aggregate passing each required sieve size, the total percentage (by weight of total mixture) and grade of asphalt binder required by the specifications for that mix type as in Table 610-3 (Fig. 4-3) unless otherwise approved by the Engineer, the percentage and grade of asphalt binder actually to be added to the mixture (for recycled mixtures), the percentage of chemical anti-strip additive to be added to the asphalt binder or percentage of hydrated lime to be added to the aggregate, the temperature at which the mixture is to be discharged from the plant, the required field density, and other volumetric properties.

The mixing temperature during production at the asphalt plant will be established on the job mix formula. The mixing temperature is based on the grade of asphalt binder required by the specifications for a specific mix type as in Table 610-3 (Fig. 4-3), unless otherwise approved by the Engineer. The mixing temperatures will be different depending on which grade of asphalt binder is being used.

In preparing and submitting a new Mix Design/JMF request, the Contractor is required to obtain from the Department, at no charge, the Mix Design computer spreadsheet (MS-Excel) that will perform the design calculations and generate the completed mix design forms once the appropriate data has been entered. All forms listed on the QMS-1 cover sheet should be submitted as the Mix Design “Packet” to the Central NCDOT Asphalt Design Lab in Raleigh, N.C. To obtain a copy of this spreadsheet, contact the Asphalt Design Engineer at (919) 329-4060.

TABLE 610-2
SUPERPAVE AGGREGATE GRADATION CRITERIA
(Percent Passing Control Points)

Standard Sieves (mm)	Mix Type (Nominal Max. Aggregate Size)							
	9.5 mm[A]		12.5 mm[A]		19.0 mm		25.0 mm	
	Min	*Max*	*Min*	*Max*	*Min*	*Max*	*Min*	*Max*
50.0	-	-	-	-	-	-	-	-
37.5	-	-	-	-	-	-	100	-
25.0	-	-	-	-	100	-	90.0	100
19.0	-	-	100	-	90.0	100	-	90.0
12.5	100	-	90.0	100	-	90.0	-	-
9.50	90.0	100	-	90.0	-	-	-	-
4.75	-	90.0	-	-	-	-	-	-
2.36	32.0[B]	67.0[B]	28.0	58.0	23.0	49.0	19.0	45.0
1.18	-	-	-	-	-	-	-	-
0.075	4.0	8.0	4.0	8.0	3.0	8.0	3.0	7.0

A. For the final surface layer of the specified mix type, use a mix design with an aggregate blend gradation above the maximum density line on the 2.36 mm and larger sieves.

B. For Type SF9.5A, the percent passing the 2.36 mm sieve shall be a minimum of 60% and a maximum of 70%.

Figure 4.2

TABLE 610-3
SUPERPAVE MIX DESIGN CRITERIA

Mix Type	Design ESALs[A] millions	Binder PG Grade[B]	Compaction Levels G_{mm} @		Max. Rut Depth (mm)	Volumetric Properties			
			N_{ini}	N_{des}		VMA % Min.	VTM %	VFA Min.-Max.	% G_{mm} @ N_{ini}
SF9.5A	< 0.3	64 - 22	6	50	11.5	16.0	3.0 - 5.0	70 - 80	≤ 91.5
S9.5B	0.3 - 3	64 - 22	7	65	9.5	15.5	3.0 - 5.0	65 - 80	≤ 90.5
S9.5C	3 - 30	70 - 22	7	75	6.5	15.5	3.0 - 5.0	65 - 78	≤ 90.5
S9.5D	> 30	76 - 22	8	100	4.5	15.5	3.0 - 5.0	65 - 78	≤ 90.0
S12.5C	3 - 30	70 - 22	7	75	6.5	14.5	3.0 - 5.0	65 - 78	≤ 90.5
S12.5D	> 30	76 - 22	8	100	4.5	14.5	3.0 - 5.0	65 - 78	≤ 90.0
I19.0B	< 3	64 - 22	7	65	-	13.5	3.0 - 5.0	65 - 78	≤ 90.5
I19.0C	3 - 30	64 - 22	7	75	-	13.5	3.0 - 5.0	65 - 78	≤ 90.0
I19.0D	> 30	70 - 22	8	100	-	13.5	3.0 - 5.0	65 - 78	≤ 90.0
B25.0B	< 3	64 - 22	7	65	-	12.5	3.0 - 5.0	65 - 78	≤ 90.5
B25.0C	> 3	64 - 22	7	75	-	12.5	3.0 - 5.0	65 - 78	≤ 90.0
	Design Parameter					**Design Criteria**			
All Mix Types	Dust to Binder Ratio ($P_{0.075}$ / P_{be})					0.6 - 1.4			
	Tensile Strength Ratio (TSR)					85% Min.[C,D]			

A. Based on 20 year design traffic.

B. Volumetric Properties based on specimens compacted to Ndes as modified by the Department.

C. TSR for Type B 25.0 and Type B 25.0C mixes is 80% minimum.

D. AASHTO T 283 Modified (No Freeze-Thaw cycle required).

Figure 4.3

TABLE 610-4 SUPERPAVE APPLICABLE VIRGIN ASPHALT GRADES			
Mix Type	**Percentage of RAP in Mix**		
	Category 1[A]	**Category 2[B]**	**Category 3[C]**
	% RAP ≤ 20%	*21% ≤ % RAP ≤ 30%*	*% RAP > 30%*
All A and B Level Mixes, I19.0C, B25.0C	PG 64-22	PG 64-22	Established by Engineer
S9.5C, S12.5C, I19.0D	PG 70-22	PG 64-22	Established by Engineer
S9.5D and S12.5D	PG 76-22	-	-

A. Category 1 RAP has been processed to a maximum size of 2".
B. Category 2 RAP has been processed to a maximum size of 1" by either crushing and or screening to reduce variability in the gradations.
C. Category 3 RAP has been processed to a maximum size of 1", fractionating the RAP into 2 or more sized stockpiles.

Figure 4.4

4.7 NCDOT "MASTER" JOB MIX FORMULA PROCEDURES

Once a mix design for a specified mix type has been approved, and if the Asphalt Design Engineer is in concurrence with the design and proposed target values, the JMF data will be entered into the NCDOT HiCAMS computer system. The Contractor will then be furnished 2 copies of the approved "Master" JMF with attached copies of the mix design data. This "Master" JMF will be for a specific plant and will serve for all projects on which that given JMF for the specified mix type is to be used. The Contractor will then place one copy of this MD/JMF assembly on file at the asphalt plant QC field laboratory for use by all QMS personnel. It is suggested that a bulletin board, preferably with a glass enclosure or a durable notebook with transparent plastic sheeting be used for this purpose. In situations where the JMF is to be used for DOT work and no lab is present, the JMF should be placed on file in the plant control room.

This is the JMF that both the Contractor QC and the DOT QA personnel will be using for producing and testing the mixture, respectively. One should keep in mind that this JMF will possibly be used for a significant period of time and must be kept in a safeguarded manner. This posted copy will be readily available to all QC/QA personnel and will also serve for all projects until voided or revisions are authorized by the Asphalt Design Engineer or his representative.

When the Contractor is ready to begin producing mixture, he will advise the QA Supervisor which JMF he intends to produce. Inasmuch as there will very likely be several valid JMF's for a given mix type at each plant using different material sources and combinations, the Contractor must use caution to assure that the appropriate materials as required by the formula are being used. In addition, he must assure that the latest version of the formula is being used and the correct JMF number is being recorded on weight tickets. The QA Supervisor will compare his test results with this JMF for compliance with specifications.

As a JMF is revised in the field for whatever reasons, the Asphalt Design Engineer will send to the Contractor an updated copy showing the revisions and the effective date. The Contractor must make certain that these updated copies are posted in the field lab as quickly as possible and that the voided copies are removed. (There may be situations where verbal approval is given by the Asphalt Laboratory prior to the actual posting of the JMF data). While it would be desirable to have the valid JMF posted at the plant at all times, it is realized that delays due to mailing will occur. Verbal approval can be given in these situations but everyone must strive to keep this to a minimum.

Master Job Mix Formulas for the standard mix types covered by the specifications will not be issued directly by the Asphalt Design Engineer for a specific project unless some special circumstance exists. The JMF data will be entered into the NCDOT HiCAMS computer system and the Resident Engineer will obtain his Project/County specific file copy of the applicable JMF through a computer terminal. Detailed instructions for this procedure are available through Asphalt Laboratory.

Included in this Manual are examples of both virgin mix JMF's and recycled mix JMF's. Note that the owner's name, plant location, and plant certification number shown on the JMF are the same as shown on the plant certification certificate. JMF's will indicate a specific anti-strip additive supplier, brand, and rate and must be used unless otherwise approved by the Engineer.

4.8 COMPOSITION OF RECYCLED MIXTURES (JOB MIX FORMULA)

When the Contractor elects to use a recycled mixture on a project, he must submit to the Department's Materials and Tests Unit his proposed mix design and JMF target values in accordance with Article 610-3 of the Standard Specifications and this Manual.

The reclaimed asphalt materials (RAP or RAS) shall be tested for the following properties: (1) asphalt content, (2) aggregate gradation, (3) aggregate effective specific gravity, and (4) asphalt viscosity and performance grade (PG) of the RAP asphalt, if more than 30% RAP is proposed.

The gradation of the reclaimed aggregates is analyzed to determine the gradation of the virgin aggregates required. Using the gradation of the aggregate from the RAP material and the new aggregates, the approved design lab will design a combined gradation meeting the specifications. The asphalt content of the RAP material is used to determine the amount of asphalt binder to be added in the recycled mixture. The performance grade parameters of the asphalt in the RAP material (if more than 30%) will determine the required grade of the additional asphalt binder in the recycled mixture. The new asphalt binder added to the recycled mix serves two purposes. It increases the total asphalt content to meet the requirements of the mix and it blends with the aged asphalt in the reclaimed portion of the mix to yield an asphalt meeting the desired specifications.

Reclaimed asphalt pavement (RAP) may constitute up to 50% of the total material used in recycled mixtures, except for mix Type S 12.5D, Type S 9.5D, and mixtures containing reclaimed asphalt shingle material (RAS). Reclaimed asphalt shingle (RAS) material may constitute up to 6% by weight of total mixture for any mix. When both RAP and RAS are used, do not use a combined percentage of RAS and RAP greater than 20% by weight of total mixture, unless otherwise approved. When the percent of binder contributed from RAS or a combination of RAS and RAP exceeds 20% but not more than 30% of the total binder in the completed mix, the virgin binder PG grade shall be one grade below (both high and low temperature grade) the binder grade specified in Table 610-3 (Fig. 4-3) for the mix type, unless otherwise approved. When the percent of binder contributed from RAS or a combination of RAS and RAP exceeds 30% of the total binder in the completed mix, the Engineer will establish and approve the virgin binder PG grade. Use approved methods to determine if any binder grade adjustments are necessary to achieve the performance grade for the specified mix type.

For Type S 12.5D and Type S 9.5D mixes, the maximum percentage of reclaimed asphalt material is limited to 20% and shall be produced using virgin asphalt binder grade PG 76-22. For all other recycled mix types, the virgin binder PG grade shall be as specified in Table 610-4 (Fig. 4-4) for the specified mix type.

When the percentage of RAP is greater than 20% but not more than 30% of the total mixture, use RAP meeting the requirements for processed or fractionated RAP in accordance with the requirements of Section 1012-1.

When the percentage of RAP is greater than 30% of the total mixture, use an approved stockpile of RAP in accordance with Section 1012-1(F). Use approved test methods to determine if any binder grade adjustments are necessary to achieve the performance grade for the specified mix type. The Engineer will establish and approve the virgin asphalt binder grade to be used.

Samples of the completed recycled mixture may be taken by the Department on a random basis to determine the PG grading on the recovered asphalt binder in accordance with AASHTO M 320. If the grading is determined to be a value other than specified in Table 610-3 (Fig. 4-3) for the required mix type, the Engineer may require the Contractor to adjust the grade and/or percentage of additional asphalt binder, and/or the blend of reclaimed material to bring the grade to the specified value.

Once the total asphalt demand has been determined, the amount of new asphalt binder to be added in the recycled mixture is then calculated. This quantity equals the calculated asphalt demand minus the percentage of asphalt in the reclaimed asphalt pavement. Trial mix designs are then made using the Superpave mix design procedures to determine the estimated design asphalt content. The same design criteria are used for recycled mixes as are used with virgin mixes of the same type.

The Job Mix Formula will establish the percentage of reclaimed aggregate, the percentage of each additional aggregate required, a single percentage of combined aggregate passing each sieve size, the total percentage of asphalt binder in the mixture, a single percentage of additional asphalt material to be added, the percentage of chemical anti-strip additive to be added to the additional asphalt material or percentage of hydrated lime to be added to the aggregate, a single temperature at which the mixture is to be discharged from the plant, the required field density, and other volumetric properties. In addition, the Job Mix Formula will establish the blend ratio and percent binder in the RAP.

Should a change in the source of virgin aggregate be made, a new job mix formula will be required before the new mixture is produced. Should a change in the source or properties of the RAP be made, a new mix design and/or JMF may be required based on the requirements of Article 1012-1 of the Standard Specifications. See Section 8.3 of this manual.

Samples of the completed recycled asphalt mixture may be taken by the Department on a random basis to determine the performance grading on the recovered asphalt binder in accordance with AASHTO M 320. If the viscosity is determined to be out of this specified range, the Engineer may require the Contractor to adjust the additional asphalt material formulation and/or blend of reclaimed material to bring the viscosity within the allowable range.

4.9 PROJECT FILE JOB MIX FORMULA PROCEDURES

Job Mix Formulas (JMF) are maintained in the Highway Construction and Materials System (HiCAMS), including revised and voided JMF's. HiCAMS automatically pulls information from the JMF to calculate the quantity of asphalt binder to be paid based upon the quantity of plant mix material placed and JMF in effect at the time the work is performed. Since copies of those JMF can be obtained at any time, the Resident Engineer is not required to maintain paper copies of the JMF within the project Files.

When a given JMF is revised, the void date will be entered on the voided formula by the Asphalt Design Engineer's office and this date will appear on all copies obtained through the computer after that date. The new or revised JMF will show the new number assigned and the effective date. This new JMF will be entered into the computer system and the cycle repeated as noted in the "Master" JMF procedures. Again, it is critical that the QC technician has the correct JMF number and shows same on his daily reports. If the JMF is revised, the technician at the plant will be advised of the new JMF number at that time and will note the revised number and date on the copy posted at the plant. This revised JMF will be used until the Contractor receives and posts the new JMF at the plant.

A listing of all Job Mix Formulas issued to a specific asphalt plant can be obtained from the local QA Supervisor. It should be noted that this listing shows all Job Mix Formulas issued to a plant including any "voided" formulas. Therefore, everyone must be careful to assure that the Contractor is using the most current JMF and not a voided formula.

JOB MIX FORMULA NUMBERING SYSTEM

Job Mix Formula numbers will be 9 digits with a 4 character code at the end. This is the number shown on the JMF posted at the plant and shown on all appropriate reports.

Ex: xx-yyyy-abc-defg

where:	xx	=	Calendar Year
	yyyy	=	Sequential number assigned by HiCAMS System
	a	=	plant number, (1 for 1st plant 2 for a 2nd plant, etc.)
	b	=	anti-strip percentage (2 for 0.25%, 5 for 0.5% etc.)
	c	=	JMF revision number
	defg	=	Code for Mix Type (Following Table)

CODE	**Mix Type Description**
HMAC	*Hot-Mix Asphalt Concrete [Default]*
WMDB	Warm Mix Astec Double Barrel Green
WMUF	Warm Mix Gencor Ultrafoam
WMAB	Warm Mix Maxam AquaBlack
WM3G	Warm Mix Evotherm 3G
WMAF	Warm Mix Meeker AquaFoam
WMSB	Warm Mix Sasol Sasobit
WMAD	Warm Mix PQ Corp. Advera
WMTX	Warm Mix Terex WMA
MRAS	Manufacturer RAS
PRAS	Post-Consumer RAS
RPAS	RAP-RAS Mixture
RP15	RAP Mix 15%
RP20	RAP Mix 20%
RP21	RAP Mix 21%
RP25	RAP Mix 25%
RP30	RAP Mix 30%
RP40	RAP Mix 40%
FC1F	OGFC Type FC-1 w/Fibers
FC1S	OGFC Type FC-1 w/Shingles
FC2F	OGFC Type FC-2 w/Fibers
FC2S	OGFC Type FC-2 w/Shingles
UBWC	Ultra-thin Bonded Wearing Course
DC78	Permeable Asphalt Drainage Course, Type P-78M
DC57	Permeable Asphalt Drainage Course, Type P-57
MCSB	Micro-surfacing, Type B
MCSC	Micro-surfacing, Type C

Note: Job Mix Formulas are accessible by QA Supervisors and Resident Engineers through HiCAMS.

SUPERPAVE MIX TYPE DESIGNATIONS

	Virgin	Recycled
** Asphalt Concrete Surface Course, Type SA-1	SA-1	RSA-1
Asphalt Concrete Surface Course, Type S 4.75 A	S 4.75A	RS 4.75A
Asphalt Concrete Surface Course, Type SF 9.5 A	SF 9.5A	RSF 9.5A
Asphalt Concrete Surface Course, Type S 9.5 B	S 9.5B	RS 9.5B
Asphalt Concrete Surface Course, Type S 9.5 C	S 9.5C	RS 9.5C
Asphalt Concrete Surface Course, Type S 9.5 D	S 9.5D	RS 9.5D
Asphalt Concrete Surface Course, Type S 12.5 C	S 12.5C	RS 12.5C
Asphalt Concrete Surface Course, Type S 12.5 D	S 12.5D	RS 12.5D
Asphalt Concrete Intermediate Course, Type I 19.0 B	I 19.0B	RI 19.0B
Asphalt Concrete Intermediate Course, Type I 19.0 C	I 19.0C	RI 19.0C
Asphalt Concrete Intermediate Course, Type I 19.0 D	I 19.0D	RI 19.0D
Asphalt Concrete Base Course, Type B 25.0 B	B 25.0B	RB 25.0B
Asphalt Concrete Base Course, Type B 25.0 C	B 25.0C	RB 25.0C

** NOTE: This mix type is not a Superpave mix type

North Carolina Department of Transportation

HOT MIX ASPHALT JOB MIX FORMULA (SUPERPAVE)

Contractor:	Quality Paving Co. Everywhere, NC	Material:	Asphalt Concrete Surface Course, Type RS 9.5B
Plant Location:	Everywhere, NC	Asphalt Type:	RP15 - RAP Mix 15%
Plant ID:	AS205	AMD:	12-0222 JMF: 12-0222-151
County:	Wake	Effective Date:	11/09/2011 (Approved)
		Contract:	WBS:

AGGREGATE SOURCES AND BLEND PERCENTAGES

APPROVED SUPPLIER	OTHER SUPPLIER	MATERIAL	BLEND %
Martin Marietta Garner Quarry - Garner		Coarse Aggregate, #78M	38.0
Martin Marietta Garner Quarry - Garner		Screenings, Washed	35.0
Carolina Sand, Inc. (S. Carolina) Pee Dee Plant		Sand, Natural	12.0
	Stockpile	RAP Aggregate, Fine	15.0
		TOTAL	100.0

JMF COMBINED GRADATION

SIEVE SIZE	% PASSING
50.0 mm	100
37.5 mm	100
25.0 mm	100
19.0 mm	100
12.5 mm	100
9.5 mm	96
4.75 mm	68
2.36 mm	51
1.18 mm	40
0.600 mm	28
0.300 mm	16
0.150 mm	9
0.075 mm	5.2

Total Binder %:	6.3
Asphalt Binder Grade:	PG 64 -22
Asphalt Pay Binder Grade:	PG 64 -22
Gmm meas (Rice):	2.441
Gmb Ndes:	2.343
Gsb:	2.671
Gse:	2.689
Gsa:	2.701
Binder Specific Gravity:	1.035
% AC Absorption:	.26
VTM Ndes:	4.0
VMA Ndes:	17.8
VFA Ndes:	77.5
Mix Temperature °F:	300
Minimum Compaction %:	92.0
Rut Depth:	
Anti-Strip Additive %:	.50
Modifier %:	.00
Nini/Ndes/Nmax:	7/65
Add'l Binder %:	5.7
% Binder from RAP:	.6
Other Binder %:	.0
Blend Ratio:	.0 / 15.0 / 85.0
% AC in RAP:	3.9
% AC in RAS:	.0

Binder Supplier: NuStar Asphalt - Binder Wilmington, NC (#03)

Anti-Strip Supplier: Arr-Maz Products Arr-Maz ProductsWinter Haven

Anti-Strip Product: Ad-Here LOF 6500

Comment: QMS Manual

Information contained herein may have been designated or indicated as "confidential" or as a "trade secret" at the time of its initial disclosure to the Department of Transportation. This information is intended for use by the Department and shall not be revealed to others without the approval of the Pavement Construction Engineer.

Approved By: Asphalt Design Engineer

Todd W. Whittington

ASPHALT MIX DESIGN AND TESTING CALCULATIONS/FORMULAS

TAI, SP-2
(3rd Edition)
Page No.

1. Combined Aggregate Bulk Specific Gravity (G_{sb}):

$$G_{sb} = BSG = \frac{100}{\frac{\%Agg\ \#1}{BSG\ Agg\ \#1} + \frac{\%Agg\ \#2}{BSG\ Agg\ \#2} + \ldots} = \frac{P_1 + P_2 + \ldots P_n}{\frac{P_1}{G_1} \quad \frac{P_2}{G_2} \quad \ldots + \frac{P_n}{G_n}}$$

Pg. 39

2. Effective Specific Gravity of Aggregate Using Rice MSG (G_{se}):

$$G_{se} = Eff.\ SG = \frac{100 - \%\ Binder}{\frac{100}{Max.\ SG} - \frac{\%\ Binder}{Binder\ SG}} = \frac{P_{mm} - P_b}{\frac{P_{mm}}{G_{mm}} - \frac{P_b}{G_b}}$$

Pg. 40

where: $P_{mm} = 100$

3. Maximum Specific Gravity of Mix With Different Binder Contents (G_{mm}):

$$G_{mm} = Max.\ SG = \frac{100}{\frac{\%\ Agg}{Agg.\ Eff.\ SG} + \frac{\%\ Binder}{Binder\ SG}} = \frac{P_{mm}}{\frac{P_s}{G_{se}} + \frac{P_b}{G_b}}$$

Pg. 41

4. % Asphalt Absorption by Weight of Total Aggregate (P_{ba}):

$$P_{ba} = 100 \left[\frac{Eff.\ SG - Agg\ Bulk\ SG}{(Agg\ Bulk\ SG)\ (Eff.\ SG)} \right] Binder\ SG = 100 \left[\frac{G_{se} - G_{sb}}{(G_{sb})\ (G_{se})} \right] G_b$$

Pg. 41

5. % Effective Binder Content (by Weight of Total Mixture) (P_{be}):

$$P_{be} = \%\ Binder - \left[\frac{\%\ Abs.\ Binder\ (by\ Wt.\ of\ Agg.)}{100} (\%\ Agg) \right] = \left[P_b - \frac{P_{ba}}{100} \right] (P_s)$$

Pg. 42

6. Percent Voids in Mineral Aggregate (VMA) in Compacted Mixture:

$$VMA = 100 - \frac{(Lab\ SG)\ (\%\ Agg)}{Agg\ BSG} = 100 - \frac{G_{mb}\ P_s}{G_{sb}}$$

Pg. 43

NOTE: P_s = Percent Aggregate by weight of total mixture.

Note: NCDOT Mix Composition is by Weight of Total Mixture (See Pg. 42-43 TAI SP- 2, 3rd Edition)
Example: 6.0% binder is by weight of total mixture.

7. Percent Air Voids (V_a) in Compacted Mixture or Voids in Total Mix (VTM):

$$V_a = \% \text{ Air Voids} = 100 \frac{(\text{Max SG} - \text{Lab SG})}{(\text{Max SG})} = 100 \frac{G_{mm} - G_{mb}}{G_{mm}}$$ Pg. 43

8. % Voids (VMA) Filled with Asphalt in Compacted Mixture (VFA):

$$\% \text{ VFA} = 100 \frac{\% \text{ Vol Binder (Effective)}}{\% \text{ VMA}} = 100 \frac{(\text{VMA} - V_a)}{(\text{VMA})}$$ Pg. 44

9. Bulk Specific Gravity of Compacted Mix Specimen or Core (G_{mb}):

$$G_{mb} = \frac{\text{Weight In Air}}{\text{SSD Weight} - \text{Weight In Water}} = \frac{A}{B - C}$$ AASHTO T 166

10. Unit Weight Total Mix (γ_m) :

$$\gamma_m = \text{Unit Weight} \left[\frac{lb}{ft^3}\right] = (\text{Mix SG})\ (62.4) = G_{mb}\ (62.4)$$

$$= \text{Unit Weight} \left[\frac{Mg}{m^3}\right] = (\text{Mix SG})\ \left(1000 \frac{Kg}{m^3}\right) = G_{mb}\ (1000)$$

11. % Solids by Volume Total Mix (P_{solids}) :

$$P_{solids} = \frac{\text{Lab SG}}{\text{Max SG}} \times 100 = \frac{G_{mb}}{G_{mm}} \times 100$$

12. Percent Asphalt Absorption by Weight of Total Mixture (P'_{ba}):

$$P'_{ba} = (\text{\% Binder Absorption by Wt. of Agg.}) \frac{\text{\% Agg.}}{100} = P_{ba} \frac{P_s}{100}$$

NOTE: P_s = Percent Aggregate by weight of total mixture.

13. Percent by Volume of Effective Binder (V_{be}):

$$V_{be} = \% \text{ Vol. (Eff) Binder} = \frac{(\text{\% Eff. Binder by Wt.})\ (\text{Lab S.G.})}{\text{Binder SG}} = \frac{P_{be}\ G_{mb}}{G_b}$$

14. % Solids by Volume of Aggregate Only:

$$= \% \text{ Solids by Volume Total Mix} - \% \text{ Volume (Effective) Binder} = P_{solids} - V_{be}$$

15. <u>% Binder * (Back Calculated from Rice SG) (P_b):</u>

$$P_b = \frac{100\,(\text{Binder SG})\left[\dfrac{\text{Eff. SG}}{\text{Max. SG}} - 1\right]}{\text{Eff. SG} - \text{Binder SG}} \qquad \frac{100\,G_b\left[\dfrac{G_{se}}{G_{mm}} - 1\right]}{G_{se} - G_b}$$

*Note: Cannot be used when Eff. S.G. is computed from the same Rice Test.

16. <u>General Weight/Volume Relationship:</u>

Weight = Volume x SG (Material) x Unit Weight of Water

17. <u>General Voids In Mineral Aggregate Relationship:</u>

VMA = % Air Voids + % Eff. Binder by Vol. = V_a + V_{be}

18. <u>Dust/Binder Ratio</u> = $\dfrac{P_{0.075}}{P_{be}}$

Where: $P_{0.075}$ = % Passing 0.075 mm (No. 200) sieve by Washing
P_{be} = % Effective Binder by Wt. of Total Mixture

STANDARD CONVENTIONS: (1)

The following conventions are used to abbreviate binder, aggregate, and mixture characteristics.

<u>Specific Gravity (G):</u> G_{xy}

x - b = <u>b</u>inder
s = <u>s</u>tone (aggregate)
m = <u>m</u>ixture

y - b = <u>b</u>ulk
e = <u>e</u>ffective
a = <u>a</u>pparent
m = <u>m</u>aximum theoretical

<u>Mass (P) or Volume (V) Concentration</u>: P_{xy} or V_{xy}

x - b = <u>b</u>inder
s = <u>s</u>tone (aggregate)
a = <u>a</u>ir

y - e = <u>e</u>ffective
a = <u>a</u>bsorbed

(Note: Standard conventions do not apply to V_{ba} and P_{ba})

(1) From The Asphalt Institute's "Superpave Asphalt Mixture Design & Analysis" Manual

<u>Unit Weight of Water:</u> γ_w

English: 62.4 lbs. / ft.^{3} Metric: 1000 kg / m^3

SECTION 5

ASPHALT PLANT EQUIPMENT AND REQUIREMENTS

5.1 BASIC OPERATION OF AN ASPHALT PLANT

Asphalt paving mixes made with asphalt binder are prepared at an asphalt mixing plant. Aggregates are blended, heated and dried, and mixed with asphalt binder to produce a hot asphalt paving mixture. The mixing plant may be small and simple or it may be large and complex, depending on the type and quantity of asphalt mixture being produced. The plant may be stationary (permanent) or portable.

5.2 TYPES OF ASPHALT PLANTS

Asphalt plants are basically of three general types:

(1) Batch plant; (2) Drum mix plant; (3) Continuous mix plant

The specifications include specific equipment requirements for each type plant. However, the two most common types of asphalt plants are the **batch plant** and **drum mix plants** and will be discussed in detail in this manual. Continuous mix plants are not covered, since these are very similar to Batch Plants. They are essentially batch plants that are controlled by the cold feeds.

5.3 CERTIFICATION OF ASPHALT PLANTS

All plants used to produce hot mix asphalt for DOT projects are certified by the Division of Highways as meeting the requirements of the specifications. The initial inspection for plant certification will be made by the Asphalt Design Engineer or his representative upon request from the Contractor. A certificate of compliance, (Figure 5-1), including a copy of the certification checklist, will be issued to the plant owner. The Certificate **shall be displayed** in the plant control room. This certification is effective from the date of issuance and is non-expiring, subject to continued compliance. Any plant which is significantly modified, relocated or which changes ownership must be recertified prior to use and a new certificate issued.

A list of all certified Asphalt Plants is available by contacting the Asphalt Laboratory or using the "Producer/Supplier" website at:

https://apps.dot.state.nc.us/vendor/approvedproducts/Producer.aspx

Changes in certifications and the addition of new certifications will be updated in the system as they occur by the Asphalt Design Engineer. Updated listings will be furnished periodically to each Division QA Supervisor, or to anyone upon request.

At the beginning of each season, and any time deemed necessary by the Engineer, each plant site will be checked for compliance with the specifications. This check will be preformed by the QA supervisor or his representative and documented in writing in a daily log or diary. When QA Supervisors find anything out of compliance with the specifications, it should be documented in writing. The Contractor and the Asphalt Design Engineer shall be notified immediately.

This certification covers all plant equipment, including recycling equipment. This certification does not certify the Contractor's Quality Control Laboratory nor does it ensure the plant's mix quality. Field Lab tests performed during production is required to ensure mix quality. The plant certification also doesn't ensure accuracy of weighing devices. Refer to the appropriate section of this manual for specific requirements of weighing devices.

NORTH CAROLINA DEPARTMENT of TRANSPORTATION

HMA/QMS

N.C. Department of Transportation

Certified Asphalt Plant

This asphalt plant has been inspected and certified as meeting the requirements of North Carolina Department of Transportation Standard Specifications for Roads and Structures Article 610-5, dated July, 2006 and other contract provisions currently in effect. This Certification shall remain effective from the date of issuance until there is a change in ownership, location, or major modifications are made to the plant equipment, subject to continued compliance with the specifications.

Quality Paving Co., Inc.
Owner

Everywhere, N.C.
Site

AS-001
Plant Certification No.

400 TPH
Rated Capacity

CMI
Make

12345
Serial No.

Drum
Type

PTD-400
Model No

Yes
Certified for Recycled Mixes? (Y/N)

Todd W. Whittington,
State Asphalt Design Engineer

5.4 ASPHALT PLANT SPECIFICATION CHECKLIST

The following inspection checks are to be made and used frequently by both **QA** and **QC Technicians** at the asphalt plant. In addition to performing the following checklist, the Quality Assurance personnel should periodically perform an inspection of the QC operations. Frequent visits to the plant should be made.

ITEMS TO BE CHECKED:

GENERAL REQUIREMENTS FOR *ALL PLANTS*

1. Check to see if the plant is certified in accordance with the Standard Specifications?
   If so, document for QA records on QA-4 or diary.
2. Check the stockpiles for:
   (a) gradation
   (b) uniformity
   (c) segregation
   (d) contamination
   (e) ample space or bulkheads between stockpiles
   (f) availability of materials as specified on job mix formula
3. Check cold feeders for:
   (a) separate bin for each material size to be used
   (b) a separate bin provided for mineral filler, if required
   (c) bins loaded in a manner such that materials will not be mixed
   (d) all gates in workable condition
   (e) synchronized proportioning system when two or more bins used
   (f) vibrators on bins where needed in workable order
   (g) all cold feeders equipped with “no-flow” sensors and in good operating condition
   (h) cold feeders calibrated in accordance with the job mix formula and documented
4. Check dryer drum for:
   (a) capability of continuously agitating aggregate
   (b) thermometric instrument in discharge chute functioning properly
   (c) automatic burner control functioning
   (d) operation of Warm Mix water injection system
5. Check trucks for:
   (a) the truck bodies are smooth and clean
   (b) the body is washed down with an approved release agent and well drained before loading
   (c) covers are being used on trucks and are of adequate size such that they will cover the load and prevent the entrance of moisture or rapid loss of temperature
   (d) proper loading (three dumps at different locations within the bed of the truck)
   (e) each truck body has a hole at least 3/8 inch (10mm) in diameter on each side of the body six inches (150mm) above the floor to facilitate the checking of temperature
6. Check to see if a satisfactory truck access **(sampling platform)** is provided
7. Check truck scales for:
   (a) truck scales accurately calibrated and certified by Department of Agriculture in accordance with Article 106-7 of the Standard Specifications
   (b) automatic weighing and recording equipment is operating properly, if used
   (c) the Contractor's public weighmaster is properly licensed and current

(d) certified weight certificates are being issued in accordance with Article 106-7

8. Check Field Laboratory and Testing Equipment for:
   (a) The laboratory is certified as meeting the requirements of Subarticle 609-5 (B) of the Standard Specifications
   (b) All testing equipment is available and in good operating condition and properly calibrated
9. Have the proper field mix verification tests been performed in accordance with section 609-4 of the Standard Specifications and the most current edition of the HMA/QMS Manual on the mix type being produced?

BATCH PLANT OPERATIONS

10. Check hot bins and screens for:
    (a) screens and screen deck are in satisfactory condition
    (b) screening system is capable of removing oversize material
    (c) hot bin sampling devices are operational
    (d) hot bin overflow chutes are functional so as to prevent spillage into other bins
    (e) gates close tightly to prevent leakage
    (f) no holes exist in bin partitions
11. Mineral Filler, if needed, is introduced into the mix satisfactorily
12. Check weigh box or hopper for:
    (a) capability of weighing each size aggregate automatically
    (b) gates closing tightly to prevent spillage into mixer
    (c) Form QC-2 (scale check) completed for aggregate scales and asphalt scales and **posted** at plant site, and a copy provided to the Division QA Supervisor
13. Check mixer for:
    (a) no leaks occur in mixer box during mixing
    (b) condition and clearance of mixer blades from fixed and moving parts adequate to assure complete mixing and coating of aggregate
    (c) timing device set and locked at desired mixing time
    (d) batches are being mixed at rated capacity of mixer
    (e) required mixing time is being obtained after the asphalt starts being discharged into the pugmill
    (f) the mix is of uniform appearance and temperature
14. Recycling Equipment, if applicable: (RAP/RAS)
    (a) is plant equipped to automatically weigh and proportion the reclaimed material according to the job mix formula requirements?
    (b) have weighing devices for reclaimed material been checked and calibrated to meet Specification tolerances?

DRYER-DRUM OPERATIONS

15. Check plant for:
    (a) aggregate belt scales have been calibrated
    (b) asphalt binder metering system has been calibrated
    (c) aggregate moisture percentage has been determined and entered into control system

(d) asphalt binder specific gravity data from mix design or most recent load ticket been entered correctly
(e) vibratory scalping screen is functional
(f) aggregate and asphalt binder feed rates are automatically interlocked

16. Check asphalt binder system for:
    (a) adequate circulation of asphalt binder and anti-strip additives
    (b) silicone has been added for surface mixes
    (c) anti-strip additive has been added in correct amounts at the terminal when required by the job mix formula or either in-line blending to be done at plant
    (d) totalizer flow meter properly installed and operating properly (If anti-strip additive introduced at plant site).
    (e) thermometer in binder feedline operating and temperature of asphalt binder is at mixing temperature
    (f) no leaks in system occur in work area
    (g) asphalt binder scales or meter are accurately calibrated
    (h) form QC-2 (scale check) completed for aggregate weigh bridges, binder meters and anti-strip additive meters with a copy provided to the QA Supervisor
17. Check if automatic proportioning and mixing equipment (including anti-strip, WMA, or fiber additive equipment) is operating properly and being used to produce mix
18. Recycling equipment, if applicable:
    (a) is plant equipped to automatically weigh and proportion the reclaimed material according to the job mix formula requirements?
    (b) have weighing devices for reclaimed material been checked and calibrated to meet Specification tolerances with form QC-2 completed and furnished to the QA Supervisor?

5.5 BATCH PLANT OPERATIONS AND COMPONENTS

Batch plants get their name from the fact that, during operation, they produce hot mix asphalt in batches, producing one batch at a time, one after the other. The size of a batch varies according to the capacity of the plant's pugmill (the mixing chamber where aggregate and binder are blended together). The Specifications require a minimum batch capacity of 3,000 lbs (1,360 kg). A typical batch capacity is about 6,000 lbs (2,720 kg); however, this may be as great as 12,000 lbs (5,440 kg)

Certain basic operations are common to all batch plants. They are:

- Aggregate storage and cold feeding.
- Aggregate drying and heating.
- Screening and storage of hot aggregates.
- Storage and heating of asphalt binder.
- Measuring and mixing of asphalt binder and aggregate.
- Loading of finished hot-mix.

Figure 5-2 illustrates the major components of a typical asphalt batch plant. Each component or group of related components is discussed in detail in sections that follow; however, an overview of the processes involved in plant operations will help the technician to understand the functions and relationships of the various plant components.

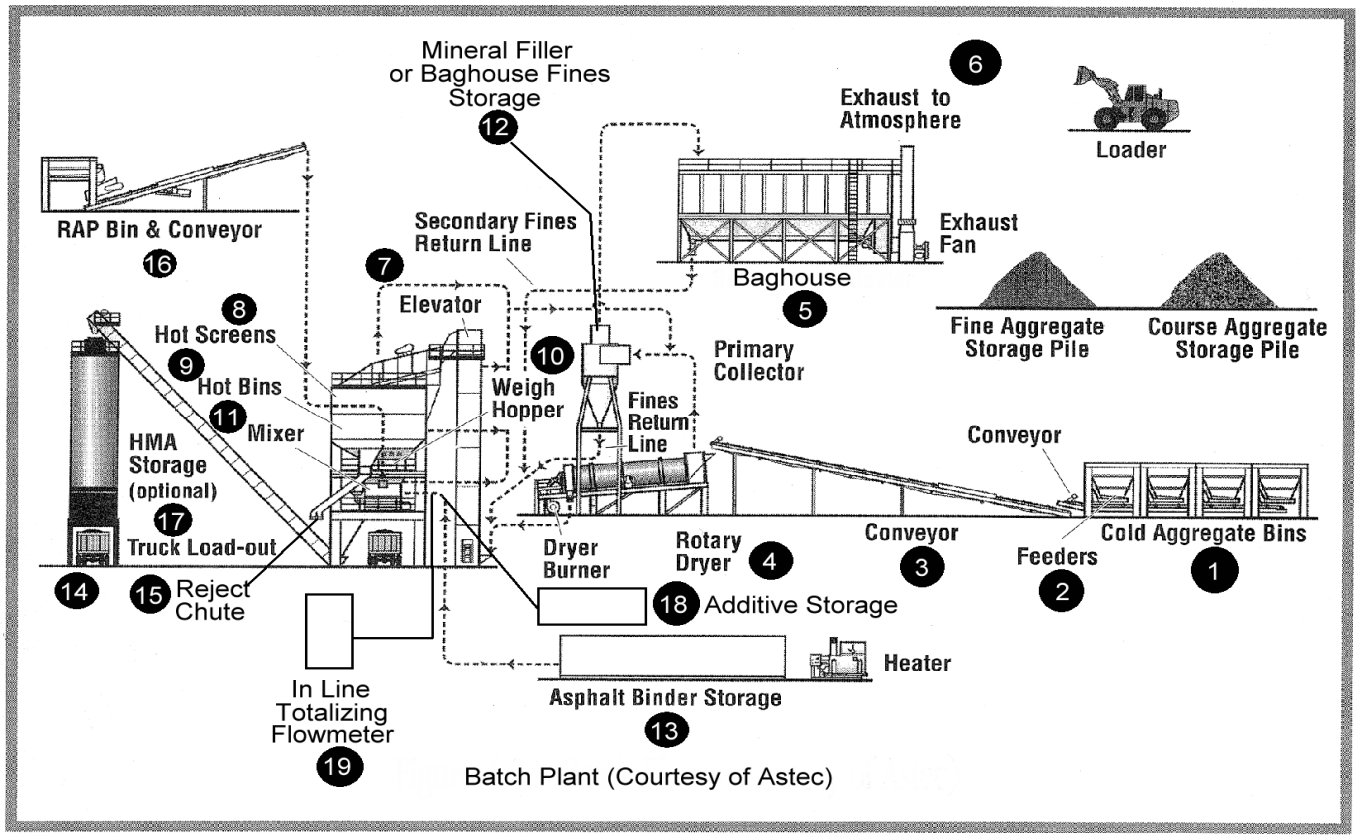

Figure 5-2
Major Batch Plant Components

Cold (unheated) aggregates stored in the **cold bins (1)** are proportioned by **cold-feed gates (2)** on to a **belt conveyor or bucket elevator (3)**, which delivers the aggregates to the **dryer (4)**, where they are dried and heated. The **baghouse (5)** removes undesirable amounts of dust from the dryer exhaust. Remaining exhaust gases are eliminated through the plant **exhaust stack (6).** The dried and heated aggregates are delivered by **hot elevator (7)** to the **screening unit (8)** equipped with a scalping screen to remove any over sized material. This oversized material is deposited into a **reject chute (15)** for disposal. The material is then sized into different sized fractions and deposited into separate **hot bins (9)** for temporary storage. When needed, the heated aggregates are measured in controlled amounts into the **weigh box (10).** The aggregates are then dumped into the **mixing chamber or pugmill (11),** along with the proper amount of mineral filler, if needed, **from mineral filler or baghouse fines storage (12).** If the plant is capable of producing recycled mixes then a **RAP Bin and conveyor (16)** is needed. Heated asphalt binder from the hot **asphalt binder storage tank (13)** is pumped into the **asphalt binder weigh bucket (14)** which weighs the asphalt binder prior to delivering it to the mixing chamber or pugmill where it is combined thoroughly with the aggregates, baghouse fines or mineral filler if used. From the mixing chamber asphalt hot-mix is deposited into waiting trucks or delivered into **storage silos or surge bins (17).**

When anti-strip additives are introduced at the plant site an **additive storage tank (18)** is required with a **totalizing flowmeter (19),** which is not capable of being reset, mounted in the additive feed line just prior to introduction into the binder feed line.

5.6 DRUM-MIX PLANT OPERATIONS AND COMPONENTS

Drum mixing is a relatively simple process of producing asphalt hot-mix. The mixing drum from which this type of plant gets its name is very similar in appearance to a batch plant dryer drum. The difference between drum-mix plants and batch plants is that, in the more conventional drum-mix plants the aggregate is not only dried and heated within the drum, but also mixed with the asphalt binder. However, there are some more recent model drum mix plants that introduce the asphalt binder outside the drum. The addition of a coater box, which is a pugmill type device, located at the discharge end of the drum allows the asphalt binder to be added into the coater box instead of into the drum. Still other "double barrel" type drum mix plants will add the asphalt binder between an inner and outer drum. The basic concept of all these types is the same though -- a continuous mixing process as compared to the mixing of batches at batch plants. There are no gradation screens, hot bins, or weigh hoppers in a drum-mix plant. Aggregate gradation is controlled at the cold feed and by the gradations of the individual aggregates being used.

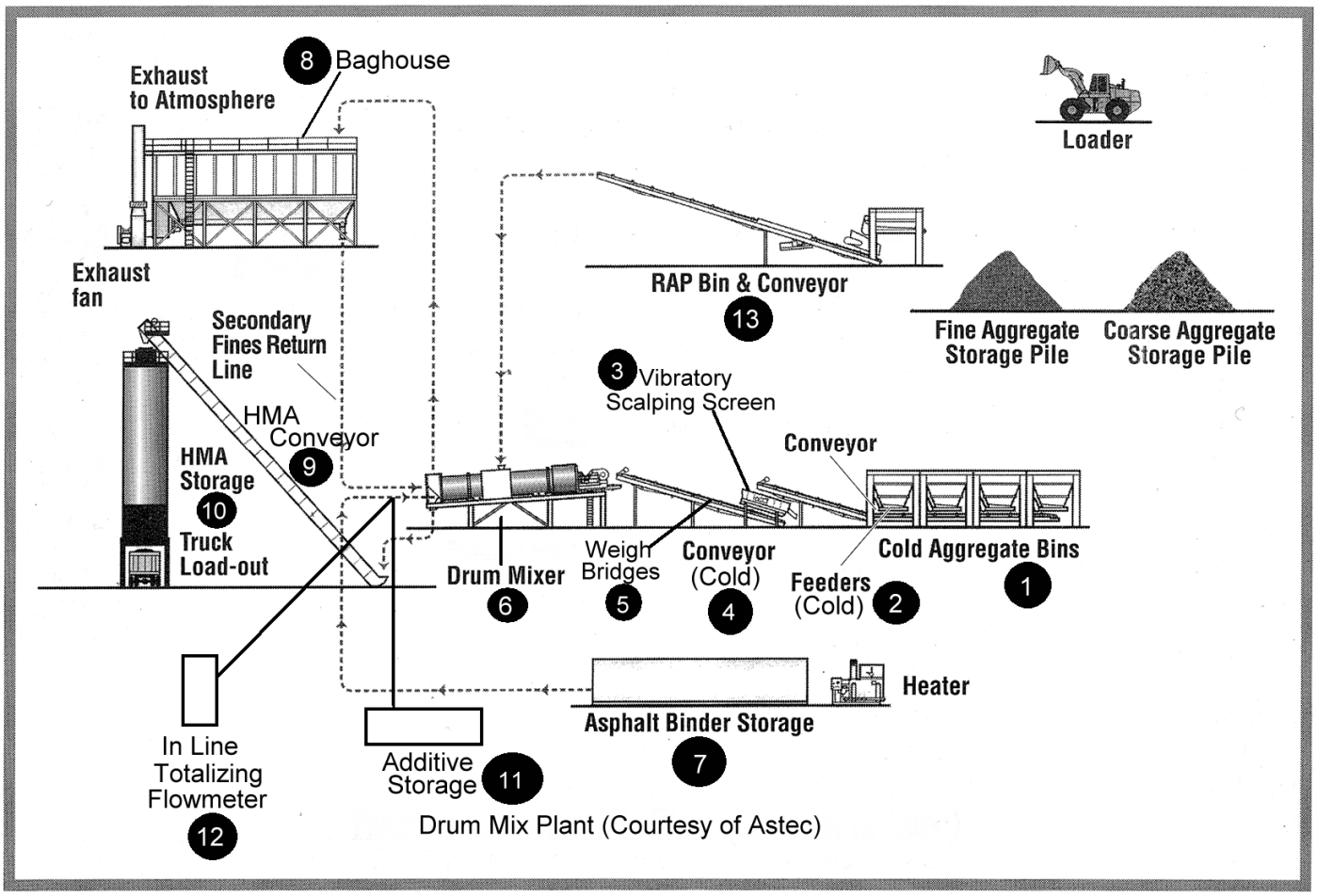

Figure 5-3
Basic Drum-Mix Plant

Drum mix plants vary in size and rated capacities from approximately 60 tons per hour up to several hundred tons per hour. Specifications require a minimum production capacity of 90 tons per hour for drum mix plants for certification purposes on all NCDOT construction contracts.

Referring to Figure 5-3, the following is a brief, general description of the sequence of processes involved in a typical drum-mix plant operation: Aggregates are deposited in the **cold feed bins (1)** from which they fed in exact proportions **cold feeders (2)** across a **vibratory scalping screen (3)** on to a **cold-feed conveyor (4).** An automatic **aggregate weighing system or weigh bridges (5)** monitors the amount of aggregate flowing into the **drum mixer (6).** The weighing system is interlocked with the controls on the asphalt binder storage pump which draws asphalt binder from a **storage tank (7)** and introduces it into either the drum, coater box, or between an inner and outer drum, where asphalt and aggregate are thoroughly blended by a mixing action. A dust collection system **baghouse (8)** captures excess dust escaping from the drum. From the drum, the hot-mix asphalt concrete is transported by **hot-mix conveyor (9)** to a **surge bin or silo (10)** from which it is loaded into trucks and hauled to the paving site. All plant operations are monitored and controlled from instruments in the control room.

5.7 INTRODUCTION OF ANTI-STRIP ADDITIVE AT BATCH PLANT OR DRUM PLANTS

When anti-strip additives are required in hot mix asphalt, the anti-strip may be either chemical or hydrated lime or combination of both. When a chemical additive is used, it shall be added to the asphalt binder prior to introduction to the aggregate. Any chemical additive or particular concentration of chemical additive found to be harmful to the asphalt material or which causes the performance grading of the original asphalt binder to be out of specifications for the grade required shall not be used.

When anti-strip additives are required the anti-strip shall be introduced and mixed into the asphalt binder at either the supplier's terminal or at the asphalt plant site. In-line blending equipment shall be used at either location.

When hydrated lime is used, it shall conform to the requirements of ASTM C 977. Hydrated lime shall be added at a rate of not less than 1.0 percent by weight of the total dry aggregate.

When chemical anti-strip additive is to be added at the asphalt plant in lieu of at the terminal, equip the plant with an in-line blending system capable of metering the additive within plus or minus 10 percent of the amount specified. Interlock the metering device with the asphalt binder control equipment in such a manner as to automatically vary the additive feed rate to maintain the required proportions and which will automatically indicate in the plant control room when flow is obstructed or stops. Inject the additive into the asphalt binder feed line prior to introduction into the aggregate. Equip the feed line with a blending device to thoroughly mix the additive with the asphalt binder prior to mixing with the aggregate. Provide a system capable of being calibrated, checked, and monitored for accuracy and quantity of the amount used.

Anti-strip additives are required in all NCDOT Superpave mixes. The quantity of anti-strip additive to be added will be based on the new or additional binder in the mix. Technicians should refer to the Job Mix Formula for the actual % of anti-strip additive for each mix type being produced.

The in-line blending system will be equipped with an in-line totalizing flow meter. The following are the guidelines for checking the totalizing flowmeters.

1. Totalizer Flowmeter is required if the chemical additive is introduced to the binder at the plant site.
2. Totalizer Flowmeter must be mounted in the additive feedline past the calibration bypass valve

3. Totalizer Flowmeters must not be capable of being reset. Meter readings will be the accumulated total flow of additive through the meter.
4. Totalizer Flowmeter is in addition to the calibration meter that is standard on additive systems.
5. Calibration Meters must be mounted in the additive feedline prior to the calibration bypass valve.
6. Additive storage tanks should be capable of being checked for quantity used. Checked either with a calibrated stick or a measuring gauge on the tank.
7. Additive storage tanks shall be equipped with a thermostatically controlled heating system capable of heating and maintaining the additive tank, contents and distribution system at the additive supplier's recommended temperature for the type of additive being used
8. Any metering system not fully meeting the above requirements may only be used with the approval of the Asphalt Design Engineer.

Note: Quality Control personnel are required to read the flowmeter prior to production, during production and at the end of production and record the readings on forms QC-1 and QC-3 as per instructions in Section 12 of this manual.

5.8 INTRODUCTION OF ANTI-STRIP ADDITIVE AT BINDER SUPPLIER'S TERMINAL

When the additive is introduced at the supplier's terminal, the additive shall be blended in-line for a minimum of 80% of the asphalt binder loading time. The asphalt binder delivery ticket shall show the rate, (or quantity), brand and grade of the additive. The Contractor shall furnish the name of the supplier, shipping point and grade of the anti-strip additive if blended at the plant site.

The blending system shall be capable of being calibrated, checked and monitored for accuracy, and amount used. A thermostatically controlled heating system capable of heating and maintaining the additive tank's contents and distribution system at the temperature recommended by the additive supplier for the type additive being used is required. The frequency of calibration of the additive system at the plant site will be the same as for the asphalt binder scales or asphalt binder meters, or as deemed necessary by the Engineer.

5.9 WARM MIX ASPHALT (WMA) TECHNOLOGIES

Warm Mix Asphalt typically incorporates the use of an additive to allow a reduction in the temperatures at which asphalt mixes are produced and placed. Thus, asphalt can be placed in cooler temperature conditions often found at night, early and late in the paving season, and during changing weather conditions.

An additional important benefit of the Warm Mix Asphalt technology is the reduction in energy consumption. When Warm Mix Asphalt technologies are implemented, the overall temperature of the mix is often reduced. This means less fuel required at the production plant to heat the aggregates to the traditional hot mix asphalt (HMA) temperatures. With the decreased production temperature comes the additional benefit of reduced emissions at the plant and during lay down.

There are many known technologies that have been developed and used to produce WMA. They include the following:

- Plant production with nozzles injecting water into the stream of hot asphalt binder causing it to foam the asphalt inside the mixing drum. This foaming process allows for better coating of all the aggregate materials in the mix.
- The addition of a synthetic zeolite to create a foaming effect in the asphalt binder.
- The use of organic additives with a low molecular weight wax.
- The addition of a surfactant to reduce the surface tension of the asphalt to allow better coating at lower temperatures without changing the viscosity of the asphalt binder.

An approved products listing of Warm Mix Asphalt (WMA) Technologies for use in North Carolina is available by contacting the Asphalt Laboratory or at the following web link:

http://www.ncdot.org/doh/operations/materials/pdf/wma.pdf

5.10 N.C. DEPARTMENT OF AGRICULTURE & CONSUMER SERVICES (NCDA & CS) SCALES CERTIFICATION

The NCDOT Standard Specifications require that scales used to weigh materials for payment shall be certified in accordance with rules and regulations set forth by the Standards Division of the Department of Agriculture & Consumer Services (NCDA & CS) in accordance with the General Statutes of North Carolina. These requirements apply to scales used to weigh asphalt mixes for pay purposes. These procedures and regulations are outlined below. Note that the length of certification is generally one year. Satisfactory evidence of certification will be a NCDA & CS sticker placed on the weighing equipment.

NCDA & CS Rules, Regulations and Procedures

1) Contractors, Subcontractors, and suppliers who utilize scales to weigh materials for payment shall have the scales certified by the NCDA & CS in accordance with the rules and regulations set forth by that agency.
2) The NCDA & CS will certify, if appropriate, all existing scales during each calendar year. The effective period of this certification is through December 31 of the following year. For example, any scale certification issued during a calendar year will be effective through the end of the following calendar year.
3) The NCDA & CS will schedule and inspect all existing platform scales during their normal work schedule. The owners of existing platform scales do not need to schedule NCDA & CS for a scale check.
4) On platform scales that have not been certified previously or platform scales that have been relocated, the owners of the scales shall notify the Standards Division of NCDA & CS (919-733-3313) at least thirty days prior to commencement of any use. If the thirty day notification cannot be met, the owners of the scales may engage a scale company licensed by the NCDA & CS to test and certify the scales. The certification by the licensed scale company will be acceptable until the NCDA & CS inspects and certifies the platform scales.
5) On all other type scales utilized to weigh materials for pay purposes, such as batch plant scales or load cells on silos, the scales owner shall notify the NCDA & CS at least two weeks prior to the actual scales check. NCDA & CS prefers that these type scales be checked during the months of January thru March

and will make every effort to check those during that time frame. This type of scale check will not be conducted by NCDA & CS personnel but must be monitored by them for certification. Either the Contractor or a certified scales company may perform this check, but in either case, it must be done under the supervision of NCDA & CS personnel in order for the scales to be certified.

6) No additional compensation or time extension will be allowed for use of a scale company.
7) All scales check should be conducted either prior to any use of new or relocated scales, or prior to the expiration of certification of existing scales.

Note: Section 6 of this manual continues in detail with asphalt plant equipment and procedures for both the batch and drum plants. It also outlines procedures and frequency for calibrating the following:

1) **cold feed calibrations and different methods (batch and drum plants)**
2) **asphalt scales, weigh bridges and meter systems (Batch and drum plants)**
3) **computing percentages and weights for hot bins at a batch plant**
4) **aggregate scale and weigh bridge frequencies (batch and drum plants)**
5) **anti-strip additive meters system calibration (if anti-strip is introduced at plant site)**

SECTION 6

ASPHALT PLANT OPERATIONS

GENERAL REQUIREMENTS

6.1.1 Asphalt Binder Storage and Handling

There are numerous grades of asphalt binder, asphalt emulsions, and other asphalt materials used in highway construction. For hot mix asphalt production, it is the responsibility of both the QC & QA technicians to insure that the proper grade of asphalt binder as shown on the job mix formula is being used. It is also the responsibility of the technicians to see that the asphalt binder is handled and stored properly. Asphalt binder used for NCDOT work must be certified or tested prior to use (See Delivery and Acceptance of Asphalt Materials in Section 2).

The QC technician should check to see that the asphalt binder is properly stored and protected. Before production is started, the QC & QA technicians should determine that the asphalt binder to be used is the grade and from the source as that stated on the job mix formula. The technicians should also determine if the asphalt binder has been certified or tested. If there is no evidence of the asphalt binder being certified or tested, the QC technician should immediately notify the Division QA Supervisor.

The asphalt binder storage capacity at the plant must be sufficient to allow uniform plant operation. Where more than one grade of asphalt binder is required for a project, at least one tank will be needed for each grade or the tank must be completely emptied before a different grade is added. ***Different grades of binders shall not be mixed***.

Asphalt binder storage tanks must be capable of being measured so that the amount of material remaining in the tank can be determined at any time. They also must be heated to keep the asphalt binder fluid enough to move through the delivery and return lines. Heating is done either electrically or by circulating hot oil through coils in the tank. Regardless of the heating method used, an open flame must never come in direct contact with the tank or its contents. The specifications state that the asphalt binder shall not be heated to a temperature in excess of the supplier's recommendation while stored or when being used in production of the mix at the plant. Where circulating hot oil is used, the oil level in the reservoir of the heating unit should be checked frequently. A drop in the level could indicate leakage of the hot oil into the tank, leakage which results in contamination of the asphalt binder. All transfer lines, pumps and weigh buckets also must have heating coils or jackets so that the asphalt binder will remain fluid enough to pump. One or more thermometers must be placed in the asphalt binder feed line to ensure control of the asphalt binder temperature, as it is being introduced into the mixer or drum.

The asphalt binder tanks must be equipped with a circulation system capable of uniformly dispersing and mixing additives throughout the total quantity of asphalt binder in the tank. Required additives must be added sufficiently in advance of production so as to insure that they are thoroughly distributed throughout the asphalt binder. See Section 5 for more specific requirements for in-line blending of anti-strip additives.

Adequate pumps must be furnished so that asphalt binder can be unloaded from tankers and still continue to operate the plant. A sampling valve or a spigot must be installed in the circulating system or tank to allow sampling of the asphalt binder. When sampling from the circulating system, exercise extreme care, as pressure in the lines may cause the hot asphalt binder to splatter.

6.1.2 Asphalt Mix Temperature Requirements

The temperature of the binder and aggregates must be adequate to allow for proper coating of the aggregate with the binder and sufficient mixing action to produce a uniform asphalt mixture. The completed asphalt mixture must be within a desired range to allow for proper placement and compaction without having damaged the binder in the mix.

The mixing temperature at the asphalt plant will be established on the job mix formula. The mixing temperature will be different depending on the grade of asphalt binder specified in Table 2 (610-2). The normal mixing temperatures for Superpave mixes are as follows unless requested by the Contractor and approved by the Engineer:

TABLE 610-1
MIXING TEMPERATURE AT THE ASPHALT PLANT

Binder Grade	JMF Temperature (HMA)	JMF Temperature (WMA)
PG 64-22	**300°F**	**225°F - 275°F**
PG 70-22	**315°F**	**250°F - 290°F**
PG 76-22	**335°F**	**260°F - 310°F**

Note: Mixing and Compaction temperatures are based on the specified PG binder grade for each mix type in Table 610-2. When using RAP or RAS with a different binder than specified, use mixing and compaction temperatures based on the original binder grade for that mix type shown in Table 610-2.

Where WMA is used the Asphalt Design Engineer (after consultation with the Contractor) will set the Mixing Temperature @ Plant within the allowable ranges listed in the above chart.

These are normal mixing temperatures; however, certain circumstances may call for a higher or lower mixing temperature. Plant and Roadway Technicians should always refer to the most current Job Mix Formula for the correct mixing temperature. The specifications require that the temperature of all mixes when checked in the truck **at the asphalt plant** shall be within ± **15° F (± 8° C) of the JMF temperature.**

6.2 AGGREGATE STORAGE

Good stockpiling and storage procedures are crucial to the production of top-quality hot-mix asphalt. When stockpiled properly, aggregates retain their proper gradation. When stockpiled poorly, aggregate particles segregate (separate by size), and gradation varies at different levels within the stockpile. All handling degrades (breaks down) individual aggregate particles to some extent, and, where different-sized aggregate particles are involved, may cause particle segregation. Therefore, handling should be kept to a minimum to prevent degradation and segregation that could make the aggregate unsuitable for use. The technician should be aware of the effect of various stockpiling and handling practices on aggregate gradation and should encourage good practices at all times.

Aggregates must be handled and stored in a manner that will minimize segregation and avoid contamination. The aggregates should be stockpiled in the vicinity of the plant on firm ground that drains well and has been cleared of vegetation and prepared in such a manner as to protect the aggregates from contamination. Stockpiles must be separated to prevent intermingling. This can be accomplished by

positive separation of the stockpiles (space), by using adequate bulkheads, by the use of silos, or other means. If bulkheads are used, they should extend to the full depth of the stockpiles and must be strong enough to withstand the pressures that will be exerted under operating conditions.

Stockpiles should be constructed in layers, rather than in cone shaped piles. Individual truckloads should be spotted close together over the entire stockpile surface. When stockpiling with a crane, each bucketful should be deposited adjacent to another, over the entire area, so that the layers will be of uniform thickness. When constructing, maintaining, or removing aggregates from coarse aggregate stockpiles, one should be careful to minimize degradation caused by the equipment. Operating on top of the stockpiles with either rubber-tired or tracked equipment should be minimized.

6.3 AGGREGATE COLD FEED SYSTEM

The flow of aggregate through an asphalt plant begins at the cold feed bins. The cold feed system (Fig. 6-1) for both batch and drum mix plants consists of a series of cold bins (usually 3 to 5) with gates and feeders mounted under the bins and the entire unit positioned over a collector conveyor belt. As stated in the Specifications, there must be a separate cold feed bin for each aggregate component used in a particular mix type. The usual setup will be four cold bins. Separate feeder bins must be used when RAP / RAS is being incorporated into the mixture.

Each cold bin should be large enough to hold an adequate supply of aggregate. When the bins are mounted together, there should be a baffle between adjacent bins that will prevent one bin from overflowing into the adjacent bin, causing variations in the gradation and properties of the mix.

Each bin will be equipped with an adjustable gate opening and a feeder belt to draw aggregate out of each bin at a controlled rate. The aggregate from each feeder is then deposited onto a collector conveyor and then fed into the dryer. The gate openings and feeder belt speeds for the various aggregate feeders must be synchronized and calibrated to deliver the proper amount of each material required by the JMF for each mix. Section 6.4 discusses how to calibrate the cold feed blend ratio being fed into the plant based on specific gate openings and belt speeds to determine conformance with the aggregate blend on the JMF.

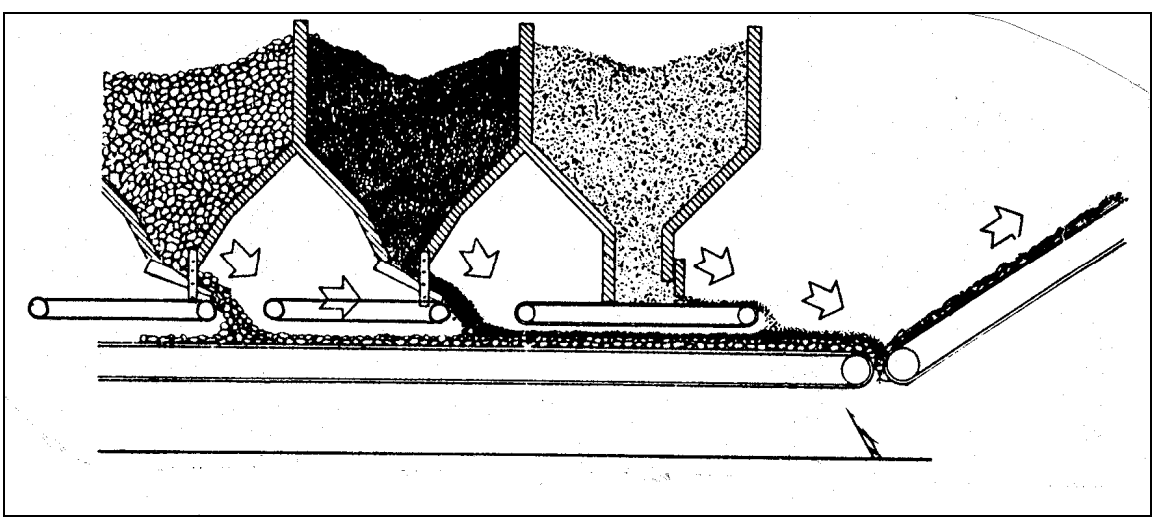

Figure 6-1
Three-bin Cold Feeder and Belt

There are several types of cold feeders used on plants, including:

1. Continuous Belt Feeder (Variable Speed Belt), Fig. 6-2
2. Vibratory Feeder, Fig. 6-3
3. Gravity Flow Feeder, Fig. 6-4

Generally, continuous belt and vibratory feeders are best for accurately metering of both coarse and fine aggregates and most commonly used on plants today. A continuous belt feeder system in conjunction with a scalping screen is the type normally used to provide the necessary control for drum mix plants.

For a uniform output from the asphalt plant, input must be accurately measured and controlled. Cold feeders must be synchronized so that a change in the feed rate of one is proportional to the feed rate of all others. Each bin must be equipped with a no-flow sensor that will alert the plant operator and/or shut down the plant if aggregate flow stops or becomes restricted.

The importance of feeding the required amounts of each size aggregate into the dryer at the correct rate of flow cannot be over-emphasized. This is doubly important when the plant is a drum mixer, since there is no re-grading of the aggregates by a screening unit as at a batch plant.

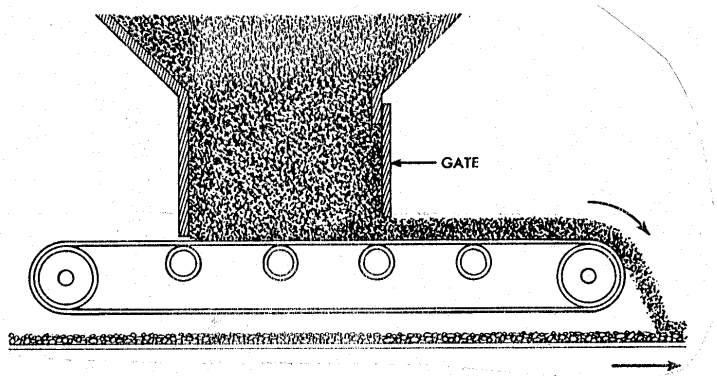

Figure 6-2: Continuous Belt Feeder (Variable Speed Belt)

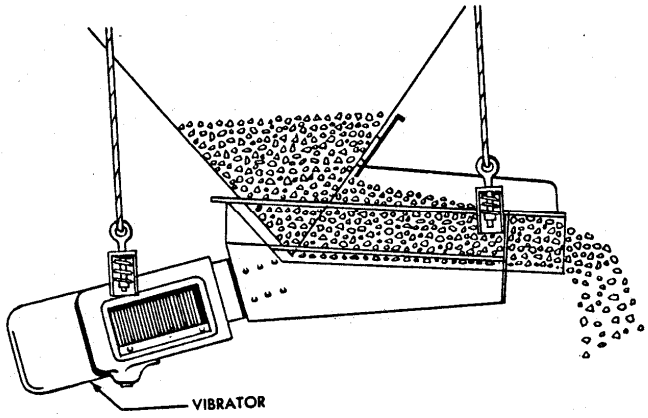

Figure 6-3: Electromagnetic Vibratory Feeder

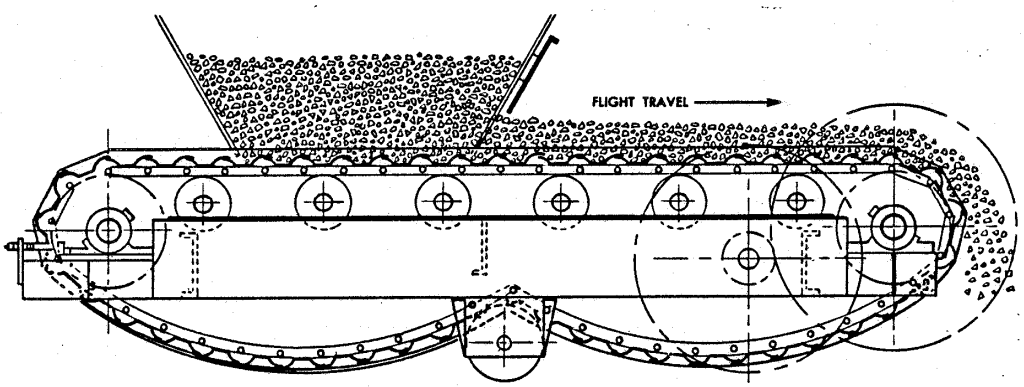

Figure 6-4: Gravity Flow Feeder

6.4 CALIBRATION OF COLD FEED BLEND RATIOS

The production and construction of a high quality asphalt pavement meeting the mix design requirements and with the required density begins with the cold feeders at the asphalt plant. The job mix formula is based on a mix design, which was developed based on a specific blend or ratio of coarse aggregate, fine aggregate, and RAP/RAS (when used) with individual specific gravities and gradations. During mix design, these materials are combined in such proportions that will result in a combination gradation and asphalt binder percentage that meets the design criteria for that particular type of mix. This blend ratio must be maintained during production if the design criteria are to remain valid. Excessive deviation from this blend may change the optimum asphalt binder percentage, result in a low stability mix, deficient or excessive air void content, a different mix specific gravity or other changes. It is for these reasons that the blend ratio shown on the job mix formula must be closely maintained at the asphalt plant.

The cold feeder aggregate blend ratio must be calibrated quarterly (**at a minimum**), and as deemed necessary by the QA Supervisor. While this calibration is the responsibility of the Contractor, the QA technician must be aware of the methods and procedures used and be able to check or verify the calibration. Approval of mix verification by the Division QA Supervisor will not be granted without satisfactory evidence of the cold feed blend calibration.

There are instances where the gradation of one or more of the individual aggregates and/or RAP/RAS may have significantly changed from that used in the initial mix design. This may make it impossible to meet the combined mix gradation if the blend ratio is still maintained. While it is usually best to maintain the blend ratio and adjust the gradation target values, there may be situations where it is better to change the aggregate blend ratio. This is especially true when two or more “same” source aggregates are being used. In these situations, QC personnel may make per aggregate cold feed blend changes of ±10% or less from the JMF target without prior QA approval. A cold feed blend change in excess of ±10% can only be authorized by the Asphalt Laboratory. In most cases, a blend change in excess of ±10% will cause a new mix design to be considered.

Calibration of the Cold Feeders can be done by various methods. Any method is satisfactory provided the blend ratio can be determined with reasonable accuracy. Reasonable accuracy is normally considered to be within ±5% of the JMF target for each aggregate and RAP/RAS components. This tolerance should not be confused with the allowable adjustments covered in Section 7.4.2 of this manual.

This ±5% tolerance is only for calibration evaluation purposes and is not applicable to allowable blend adjustments.

Whichever method is used, aggregate and RAP/RAS samples must be actually weighed in order to determine the cold feed blend percentages. Some of the more commonly used methods of calibration are listed below with a brief description of each.

- Pan Method: A pan or shallow container is passed beneath each operating feeder unit to obtain a sample of material that will be weighed and then converted to a percentage of the total aggregate weight (including RAP/RAS) being furnished.
- Length-of-Belt Method: A sample of each material being used (including RAP/RAS) is taken from a constant belt length, weighed, and then converted to a percentage of the total aggregate weight being furnished.
- Weigh Bridge Method: Each material being used (including RAP/RAS) is run across the aggregate weigh bridge and into a truck at a normal production rate for a fixed amount of time. Individual bin feed rates are then converted to a percentage of the total weight being furnished.
- Manufacturer's Method: Most manufacturer's plant manuals contain specific procedures for cold feed calibrations. These are acceptable methods, provided the aggregates are actually weighed in some manner during the process.

While these are some of the more commonly used calibration methods, there may be other acceptable methods. As mentioned before, any method is satisfactory provided the blend ratio can be accurately determined by actually weighing the aggregate or RAP/RAS samples. While acceptable accuracy is generally within ±5% of the JMF target for each aggregate and RAP/RAS component, the blend ratio at a drum mix plant probably needs to be maintained more accurately than this since there is no secondary screening unit as in a batch plant. Again, this tolerance is for blend calibration purposes only and is not applicable to allowable blend adjustments. The percentage of RAP/RAS shown on the JMF may not be adjusted except with the specific approval of the Asphalt Design Engineer.

Figures 6-5 and 6-6 are examples of a length-of-belt method of calibration and a JMF comparison. While this is the example used in this manual, it in no way implies that this is a better or more accurate method than the others listed above.

Cold Feed Blend Calibration Example
(Length-of-Belt Method)

Given a total of 50.0 lbs. of aggregate (A+B+C+D) taken from a cross-section of cold feed belt, determine the percentage of each aggregate being used.

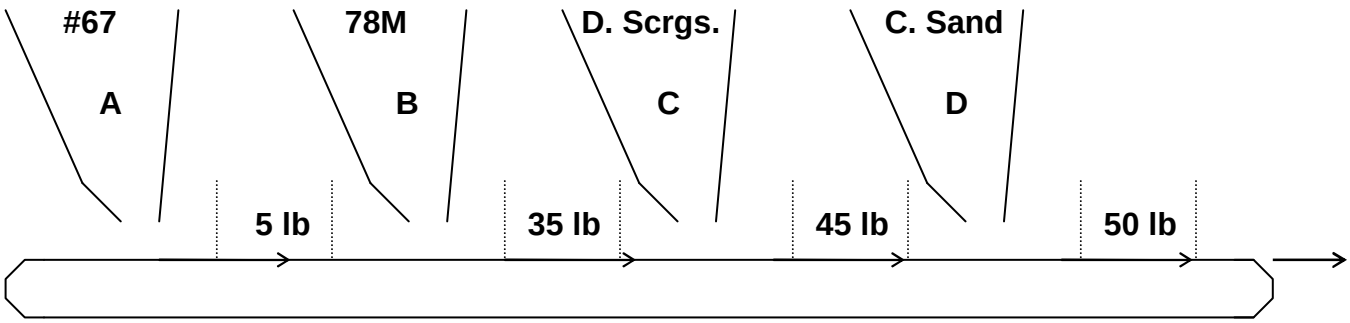

No. 67 Stone = 5 - 0 = 5 lbs.

No. 78M Stone = 35 - 5 = 30 lbs.

D. Scrgs = 45 - 35 = 10 lbs.

C. Sand = 50 - 45 = 5 lbs.

Total = 50 lbs.

Computations

No. 67 Stone = 5 ÷ 50 = 10%
No. 78M Stone = 30 ÷ 50 = 60%
D. Scrgs. = 10 ÷ 50 = 20%
C. Sand = 5 ÷ 50 = 10%

Total = 50 lbs.

Note: Cross-section of belt from which sample is taken should be 1.0 ft. or more in length.
Each section removed after each feeder must be the same length for all feeders.

Figure 6-5

Page 1 of 1
11/10/2009

North Carolina Department of Transportation

HOT MIX ASPHALT JOB MIX FORMULA (SUPERPAVE)

Contractor:	Quality Paving Co. Everywhere, NC	Material:	Asphalt Concrete Surface Course, Type R3 12.5C
Plant Location:	Everywhere, NC	AMD:	08-119 JMF: 08-119-152
Plant ID	AS205	Effective Date:	02/24/2009 (Approved)
County:	Wake	Contract:	WBS:

AGGREGATE SOURCES AND BLEND PERCENTAGES

APPROVED SUPPLIER	OTHER SUPPLIER	MATERIAL	BLEND %
		Coarse Aggregate, #78M	31.0
		Coarse Aggregate, #67	16.0
		Screenings	15.0
	Tidewater - Pensacola	Sand, Natural	23.0
	Stockpile	RAP Aggregate, Fine	15.0
		TOTAL	100.0

Compare Cold Feed Calibration results with JMF Blend Percentages

JMF COMBINED GRADATION

SIEVE SIZE	% PASSING
50.0 mm	100
37.5 mm	100
25.0 mm	100
19.0 mm	100
12.5 mm	93
9.5 mm	84
4.75 mm	60
2.36 mm	46
1.18 mm	33
0.600 mm	24
0.300 mm	13
0.150 mm	7
0.075 mm	4.7

Total Binder %:	5.3
Asphalt Binder Grade:	PG 70 -22
Gmm meas (Rice):	2.470
Gmb Ndes:	2.371
Gsb:	2.663
Gse:	2.680
Gsa:	2.703
Binder Specific Gravity:	1.030
% AC Absorption:	.25
VTM Ndes:	4.0
VMA Ndes:	15.0
VFA Ndes:	74.7
Mix Temperature °F:	315
Minimum Compaction %:	92.0
Stability (lbs.):	.00
Flow (0.01):	.00
Anti-Strip Additive %:	.50
Modifier %:	.00
Nini/Ndes/Nmax:	
Add'l Binder %:	4.4
% Binder from RAP:	.9
Other Binder %:	.0
Blend Ratio:	.0 / 15.0 / 85.0
% AC in RAP:	6.0
% AC in RAS:	.0

Binder Supplier: NuStar Asphalt Wilmington, NC (#31)

Anti-Strip Supplier: Arr-Maz Products Arr-Maz ProductsWinter Haven

Anti-Strip Product: Ad-Here LOF 6500

Comment: TSR - 87.8 Gyrations 8/100

Information contained herein may have been designated or indicated as "confidential" or as a "trade secret" at the time of its initial disclosure to the Department of Transportation. This information is intended for use by the Department and shall not be revealed to others without the approval of the Pavement Construction Engineer.

Approved By: Asphalt Design Engineer

Todd W. Whittington

Figure 6-6

6.5 BATCH PLANT OPERATIONS

6.5.1 The Dryer

The aggregates are delivered from the cold feeder to the dryer. The dryer accomplishes two things: (1) it removes moisture from the aggregates and (2) it raises the aggregate temperature to the desired level. The component parts of the dryer are: (1) a revolving cylinder usually from 3 to 10 feet (1 to 3 meters) in diameter and from 20 to 40 feet (6 to 12 meters) long; (2) a burner which is either gas or oiled fired; and (3) a fan, which may be considered part of the dust collector system, but its primary function is to provide the draft air for combustion in the dryer. The dryer is equipped with longitudinal troughs or channels, called lifting flights, which lift the aggregate and drop it in veils through the burner flame and hot gases.

The slope of the drum, its speed of rotation, diameter, length, and the arrangement and number of flights control the length of time required for the aggregate to pass through the dryer. The aggregate then passes to the hot elevator through a discharge chute near the burner end of the dryer.

The dryer will have an automatic burner control device with an approved thermometric instrument located in the aggregate discharge chute to actuate the automatic burner control. The purpose of the automatic burner control is to insure a uniform mix temperature and to prevent overheating of the aggregate, which can cause damage to the asphalt during mixing. Fluctuating mix temperatures often result in poor laydown and compaction results. Uniform density at the required degree of compaction cannot be achieved when the mix temperature varies from one batch or load to the next.

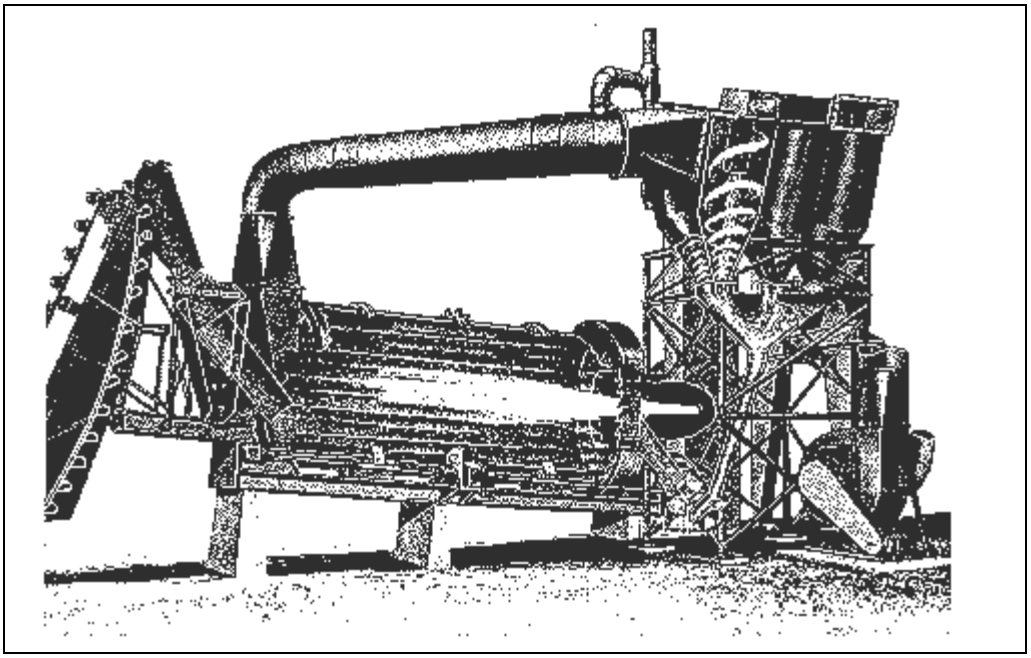

Figure 6-7: Dryer

6.5.2 Screening Unit

The screening unit (See Fig. 6-8) includes a set of several different sized vibrating screens. The first in the series of screens is a scalping screen which rejects and carries off oversized aggregates. This is followed by one or two intermediate-sized screens, decreasing in size from top to bottom. At the bottom of the stack is a fine screen, occasionally referred to as a "sand" screen. (See Figure 6-9).

The screens serve to separate the aggregates into specific sizes. To perform this function properly, the total screen area must be large enough to handle the total amount of feed delivered. Here again, the screens must be clean and in good condition. The capacity of the screens must be in balance with the capacity of the dryer and the capacity of the pugmill.

When too much material is fed to the screens or the screen openings are plugged, many particles, which should pass through, ride over the screens and drop into a bin designated for larger size particles. Similarly, when screens are worn or torn, resulting in enlarged openings and holes, oversized material will go into bins intended for smaller-sized aggregate. Any misdirection of a finer aggregate into a bin intended to contain the next larger size fraction is called "carry-over". Excessive carry-over can add to the amount of fine aggregate in the total mix, thus increasing the surface area to be covered with asphalt binder. If the amount of carry-over is unknown or if it fluctuates, particularly in the No. 2 bin, it can seriously affect the mix design in both gradation and asphalt binder content. Excessive carry-over can be detected by a sieve analysis of the contents of the individual hot bins and must be corrected immediately by cleaning the screens or reducing the quantity of material coming from the cold feed, or both. Some carry-over is to be expected and permitted in normal screening operations, provided it remains relatively uniform.

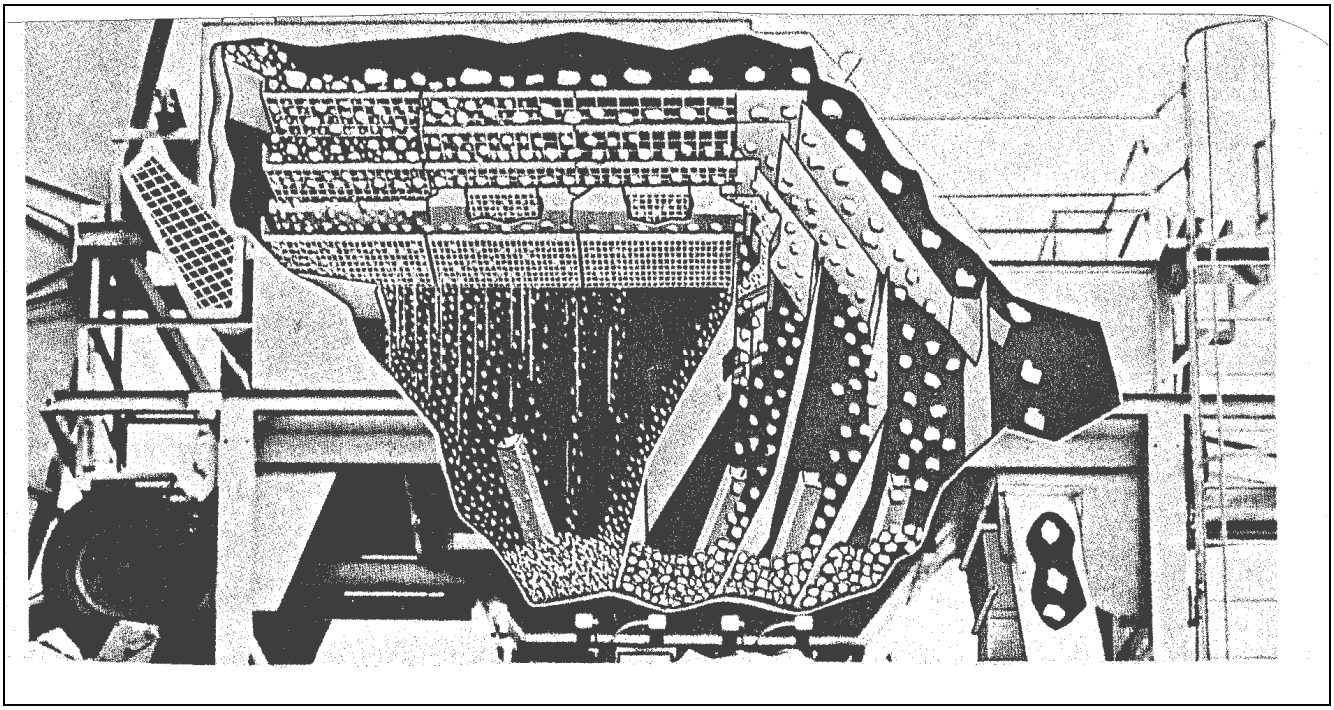

Figure 6-8
Screening Unit

The No. 2 bin (intermediate fine aggregate) is the critical bin for carry-over. This is the bin that will receive the finest aggregate in carry-over and which will affect the asphalt binder demand of the mix the most. Typically, the carry-over in the No. 2 bin should not exceed 10 percent. Running a sample of the No. 2 bin material over a No. 8 (2.36mm) sieve will indicate the amount of carry-over. To prevent excessive carry-over, daily visual inspection of the screens for cleanliness and overall condition is recommended, preferably before starting each day's operation. When conditions warrant, the screens shall be cleaned or replaced.

6.5.3 Hot Bins

Hot bins are used to temporarily store the heated and screened aggregates in the various sizes required. Each bin is an individual compartment or a segment of a larger compartment divided by partitions (See Fig. 6-9). Properly sized hot-bin installation should be large enough to hold sufficient material of each size when the mixer is operating at full capacity. The bin partitions must be tight, free from holes, and high enough to prevent intermingling of the aggregates. Each hot bin shall be equipped with an overflow pipe to prevent aggregate from backing up into other bins. The overflow pipes shall be checked frequently to make sure they are functioning and thus prevent contamination by intermingling sizes from adjacent bins. The bottom of each bin is fitted with a discharge gate which shall close tightly so that no material is allowed to leak into the weigh hopper.

All hot bins are to be equipped with a device to permit sampling of the aggregate from each bin. Samples of aggregates from these bins may be taken from "gates" or "windows" in the sides of the bins, or by diverting the flow of aggregates from the bins into the sampling container. It is essential that the sampling devices or methods be such that representative samples of the materials in the hot bins can be obtained. Gradations of the samples from the different bins will then be analyzed to determine the hot bin pulls, as discussed later.

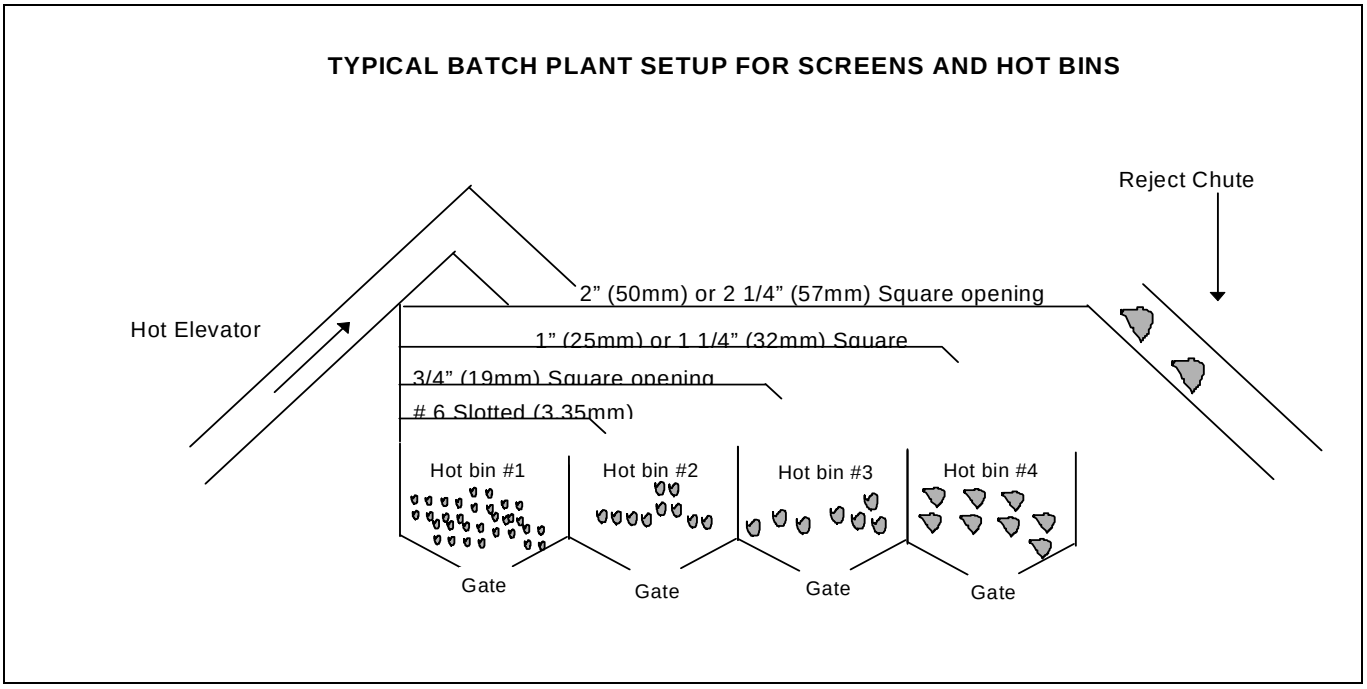

Figure 6-9

6.5.4 Aggregate Weigh Hopper

Aggregates are released from the hot bins directly into the weigh hopper, generally beginning with the largest size aggregate and progressing down to the finest size, where the mineral filler usually is used, sandwiched between the larger aggregates. The amount from each bin is determined by the batch size and the proportions or percentages required to be blended. Determination of hot bin percentages and hot bin pull weights will be discussed later in this section.

The weigh hopper is suspended from a scale beam and the amounts of aggregate are weighed cumulatively.

Before withdrawal starts, there should always be sufficient materials in the hot bins for a complete batch. If a bin is near depletion or is running over, chances are that an adjustment in the cold feed rates or hot bin pulls are required.

6.5.5 Asphalt Binder Bucket or Meter

Asphalt binder may be weighed in a special bucket, or it may be measured by a meter for each batch. When weighed into a batch, asphalt binder is pumped into a bucket of known weight and weighed on a scale.

When metering devices are used, a volumetric measurement is made. The volume of asphalt binder changes with temperature. Some asphalt binder meters have built-in temperature-compensating devices that correct the flow of asphalt binder when changes in temperature occur. The volume of asphalt binder pumped between two meter readings may be weighed as a means of calibrating the meter.

6.5.6 The Mixer Unit (Pugmill)

After proportioning, the aggregate and binder are introduced into the pugmill for mixing. Batch plants are equipped with a pugmill mixer, which consists of twin shafts equipped with paddles for mixing the ingredients into a homogeneous mass (See Fig. 6-10). Main parts are: the paddle tips, paddle shanks, spray bar, liners, shafts, discharge gate and heated jacket. Efficient mixing is dependent upon the number, shape, and condition of the paddle tips, speed of the mixing shafts, length of mixing time, temperature of the material, quantity of materials in the mixer, and specifically the clearance between the paddle tips and liner plates. **NCDOT Specifications require that all batch plants shall have a mixer with a rated capacity of not less than 3,000 lbs. (1360 kg).**

Close attention should be given, through visual inspection, to the uniformity and coating of the mix. Excessive clearance between paddle tips and mixer liners, broken, worn or missing paddle tips and the batch size are factors which can contribute to a lack of uniformity and coating of the mixture. Batch sizes should be determined by the rated capacity of the mixer. The rated capacity of the pugmill mixer will be indicated on the plant certification. Underfilling or overfilling should not be allowed.

The mixers of batch mix plants and continuous mix plants are essentially of the same design, except for the variations in arrangement of the paddle tips. In the batch-mix mixer, the materials are dumped into the center of the mixer and the paddles are arranged to give an end-to-center mixing or a run-around (“figure-eight”) mixing pattern. The material is held in the mixer the required mixing time and then discharged through the discharge gate into the transporting vehicles.

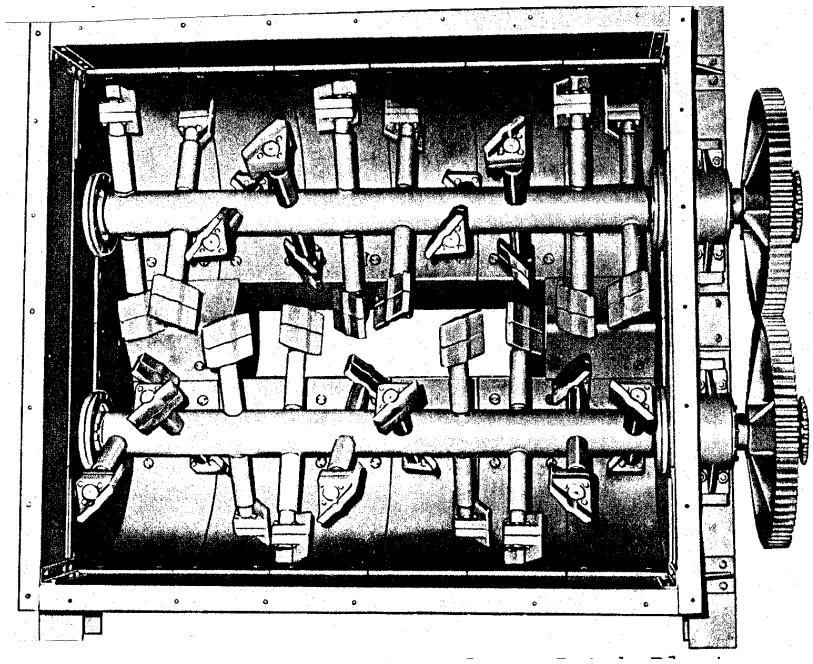

FIGURE 6-10
Pugmill Mixer for a Batch Plant

Specifications require that the mixer be equipped with an automatic timing device to automatically regulate the dry-mixing and wet-mixing periods.

6.5.7 Automatic Control of Proportioning and Mixing

NCDOT Specifications require that all plants have fully automated controls for proportioning and mixing. A fully automatic system is defined as one such that once mix proportions and timers are set and the plant operation is started, it will automatically complete the proportioning and mixing cycle without further effort of the plant operator or until a shortage of material or some extraordinary event causes the plant itself to halt the operation.

The mixer must be equipped with an interlocking timing device, capable of being set at intervals of five seconds or less, to control the operations during the mixing cycle. The mixing time will be established by the plant operator or the QC technician. The mixing time should be long enough to get a uniform distribution of aggregate sizes and a uniform coating of asphalt binder on all aggregate particles; however, excessive mixing should not occur due to the hardening effect of the asphalt binder film on the aggregate by exposure to air and heat.

The Specifications also provide that **upon a malfunction** of the required automatic equipment on a batch plant, the **plant may continue to operate manually for the following two (2) consecutive working days**. It is the intention of this specification that the automatic equipment be operated at all times, except in situations where legitimate breakdowns occur. The Contractor must make every effort to repair any breakdowns of automatic controls immediately.

6.5.8 Calibration of Batch Plant Asphalt Scales, Weigh Bridges, and Meters

Before these calibrations are performed, the Contractor must give the appropriate Division QA Supervisor at least two days notice to allow the QA Supervisor an opportunity to observe these calibration procedures. A certified Level I or Level II plant technician shall be present during this calibration. A Level II Technician signs the QC-2 Form certifying the accuracy of the scales check when completed. Separate sets of scales are used to weigh asphalt binder, aggregates, RAP and RAS (if applicable), being used in the mix. The Contractor is required to check the calibration of these aggregate scales, asphalt binder scales, and weigh bridges (recycled mixes), on a periodic basis. The frequency for performing these scale checks is quarterly for the asphalt binder scales, aggregate scales, and weigh bridges. For this frequency, **quarterly** is defined as once within each calendar quarter not to exceed 90 days apart. All plant scales shall be accurate to 0.5 percent of the anticipated scale settings that may be required. The Contractor shall have on hand not less than ten 50 lb. (22.7 kg) weights for testing the plant scales. The procedures and documentation of this calibration are described below.

(A) AGGREGATE SCALES & WEIGH BRIDGES (**Quarterly** Frequency):

The aggregate scales are checked as follows: Scales are first checked with the weigh hopper empty to be sure they show zero. Then ten 50 lb. (22.7 kg) standard weights are either placed on or attached to the aggregate weigh hopper and the scales reading is read and recorded. This will be the increment check. Care should be taken in evenly distributing these weights in order to prevent scale misalignment. The weights are then removed and the same amount of aggregate is drawn from the hot bins and deposited into the weigh hopper to replace the standard weights. The ten weights are again placed on or attached to the weigh hopper and another scales reading is taken and recorded. This would be the 1000 lb (454 kg) increment check. This procedure is repeated at 500 lb (227 kg) intervals until the total weight checked is slightly more than the pounds of aggregate that will be used in each batch of mix. At anticipated scale settings, the scales must be within 0.5 percent accuracy. If not, it is the Contractor's responsibility to make the necessary adjustments or have scales repaired by a qualified scales technician. A recheck of the scales would then be made to ensure their accuracy.

During normal operations, aggregate scales should be monitored to be sure they zero correctly during weighing operations and that they show no signs of binding or dragging which would cause erroneous readings. Some common causes of scale malfunction are: build-up of asphalt binder, dust, corrosion or dulling of the scales' knife edges, or aggregates lodging in the scale supports.

Belt scales (weigh bridges) are utilized at some batch plants to monitor the RAP material percentage used in recycled mixes. When used, these belt scales will be checked quarterly using the same procedure for checking belt scales on a drum mix plant (See Section 6.6.3 for this procedure).

(B) ASPHALT BINDER SCALES (**Quarterly** Frequency):

The asphalt binder scales are calibrated in nearly the same manner as the aggregate scales, but only one weighing operation is required. The 50 lb (22.7 kg) standard weights are placed on or attached to the asphalt binder bucket one at a time, and readings are recorded as each weight is added. This is continued until the

combined weight is slightly in excess of the pounds (kilograms) of asphalt binder required per batch of paving mixture. Asphalt binder scales, if in true adjustment, should indicate the same value as the total of the standard weights used, and must be within the required 0.5 percent accuracy at the anticipated scale setting. If the weighing scales error exceeds the tolerance permitted by specifications, plant operations should not be started until the scales are adjusted or repaired by a qualified scale technician. This corrective measure is the Contractor's responsibility. During normal operations, the tare weight of the empty bucket should be watched carefully to see that the bucket is drained completely and to compensate for any asphalt binder and dust clinging to it. The asphalt binder bucket should be tarred at the beginning of each day and checked after the first few loads are discharged. Quite often, asphalt binder accumulates on the side and bottom and reduces the weight of asphalt binder actually used in the mix.

(C) ASPHALT BINDER METERS (**Quarterly** Frequency):

Asphalt binder meters are volume displacement mechanisms, and when used they should be checked for accuracy. This check should be performed quarterly at a minimum. The metering system should also be within 0.5 percent accuracy. Since asphalt binder content is usually expressed as a percent by weight, a correlation between meter readings and weight should be established. A simple method to determine the correlation is to read the meter, pump a quantity of asphalt binder into a tarred container, and then read the meter again. The weight of asphalt binder divided by the difference in meter readings determines the weight of asphalt binder pumped per division. For a more detailed explanation of checking an asphalt binder metering system, see Section 6.6.4 of this manual. The viscosity and unit weight of the asphalt binder change with a change in temperature. When the temperature is increased the viscosity decreases. The unit weight decreases about 1 percent for each increment of increase in temperature of 28° F (15.5℃). Pumping efficiency may be affected by a change in temperature, and it may be desirable to calibrate the pump over a range of asphalt binder temperatures. Volumes and viscosity's can be determined later for calibration and plotting purposes if necessary. Some asphalt binder meters have built-in temperature-compensating devices that correct the flow of asphalt binder when temperature changes occur. When a meter without a temperature-compensating device is used, it is necessary to adjust the delivery setting for each change in asphalt binder temperature. The Technician should refer to the Plant Manual for additional details.

(D) ANTI-STRIP METER SYSTEM (**Quarterly** Frequency):

If the anti-strip additive is introduced into the binder at the plant site, a calibration flowmeter is mounted in the anti-strip additive feedline near the additive storage tank. This meter is to insure that the additive pump is operating properly and the correct amount of additive is being uniformly introduced into the binder at all times. The metering device will be interlocked with the asphalt binder control equipment in such a manner as to automatically vary the additive feed rate to maintain the required proportions and which will automatically indicate in the plant control room when the additive feed rate is obstructed or stops. This meter should be checked for accuracy at

least quarterly at both batch and drum plants and should be within ±10% of the amount of additive specified on the JMF.

Since the additive is introduced at minor dosages, it is adequate to pump off only a small quantity to check the meter. The procedure is as follows: Check and record the current meter reading. Pump off 4-5 gallons of additive (based on the meter reading) through the by-pass valve into a tared container. Determine the additive weight by weighing contents of tared container on scales accurate to at least the nearest pound. Calculate the actual gallons pumped off by dividing this weight by the pounds per gallon weight of the additive. The pounds per gallon weight is determined by multiplying 8.33 times the specific gravity of the additive. The specific gravity of the additive can normally be found on the additive delivery ticket or by contacting the supplier. The gallons shown to have been pumped off by the meter reading should be within ±10% of the actual gallons. If not, the meter must be adjusted and this procedure repeated until the required tolerance is met.

NOTE: This calibration flowmeter should not be confused with the Totalizer Flowmeter that is also required on the additive feedline if additive is introduced to the binder at the plant. See Section 5.7 of this manual for details on the requirements for the totalizer flowmeter.

(E) DOCUMENTATION:

A plant scales calibration Form QC-2 (see Section 11) and/or certification by the Department of Agriculture or a certified scale company will suffice for either the initial check or for a periodic check, provided the date of the certification is within the time frame noted above for asphalt binder, aggregate scales and weigh bridges. A single scales check may and should serve for several different projects if the check was conducted within the above noted time. Form QC-2 (see Section 11) should be submitted to the Division QA Supervisor at the completion of each scales check.

As noted, the QC Technician should post a copy of Form QC-2 in the QC Laboratory when the scales are actually calibrated. A copy shall also be furnished to the appropriate Division QA Supervisor.

6.5.9 Setting of Batch Weights

Normally it is the Contractor's responsibility to calibrate the hot bins; however, the QA Technician should observe and be aware of the procedures used to arrive at an aggregate combination that meets the job-mix formula.

To produce the desired asphalt mix; it is necessary to pull a certain amount of aggregate from each hot bin. The amount that is pulled from each bin is dependent upon what the Job Mix Formula calls for and what each hot bin contains (the gradation); which means the content of each bin must be analyzed.

The first step is to start running the plant, the cold feed, the dryer and the screens. After the plant has settled down so that the material in the bins is representative of the proportions established at the cold gates, a sample of aggregate is taken from each bin.

(A) HOT BIN SAMPLING

This method describes a procedure for obtaining representative aggregate samples from the asphalt plant hot bins. An approved sampling device is used that will retain a representative sample of aggregates when passed through a veil of material flowing out of the bin chute. The device must be of a dimension so that it will extend slightly more than the distance from the outside edge of the predominantly fine material to the outside edge of the predominantly coarse material as the device enters the stream of flowing aggregates. A shovel is not acceptable.

In the flow of material over the plant screens, finer particles fall to the near side of the bins and coarser particles fall to the far side, particularly in the No. 1 bins (See Fig. 6-11). When material is drawn from the bin by opening a gate at the bottom, the stream consists predominantly of fine material at one edge and coarse material at the other.

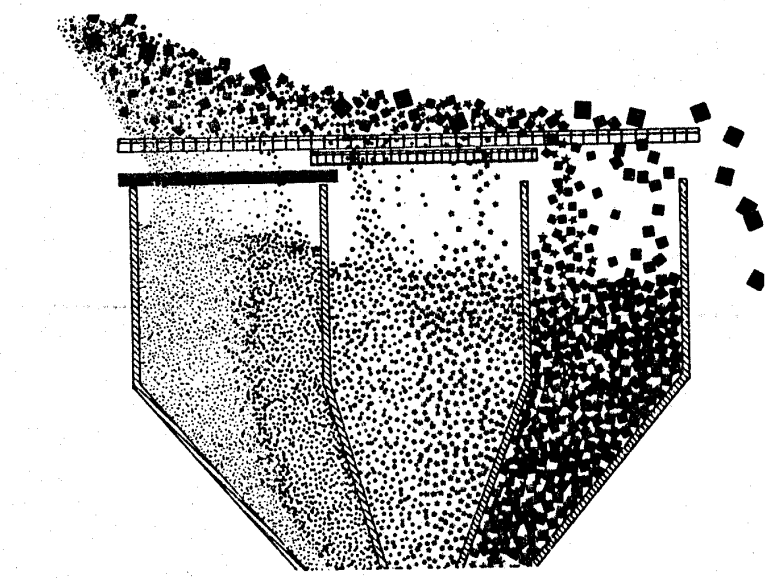

Figure 6-11:
Segregation of Aggregates in Hot Bins (Note Segregation Inside Each Bin)

This condition is critical in the No. 1 (fine) bin, since the asphalt binder demand is influenced heavily by the material from this bin. Therefore, the relative position of the sampling device in the stream determines whether the sample will be composed of the fine portion, the coarse portion, or will be an accurate representation of the total material in the bin (See Fig. 6-11). Each compartment shall be equipped with adequate and convenient devices to provide for sampling. This means that the plant must be constructed to either (a) enable a sampling device to be inserted and used effectively, (b) to have an approved gate, window or slide under each bin for diverting the flow of aggregates from the bins into the sampling device, or (c) to contain an automatic bin sampling device.

The sampling procedure is as follows: Verify that the containers and sampling device are clean. Pass the sampling device through the veil of material as it flows from the bin. The sampling device must be inserted under the stream of material in such a way that the device simultaneously collects the predominantly fine material at the other edge (See Fig. 6-12). The sampling device will be withdrawn before it overflows and the contents deposited in a clean container. This procedure will be repeated for each bin to be analyzed.

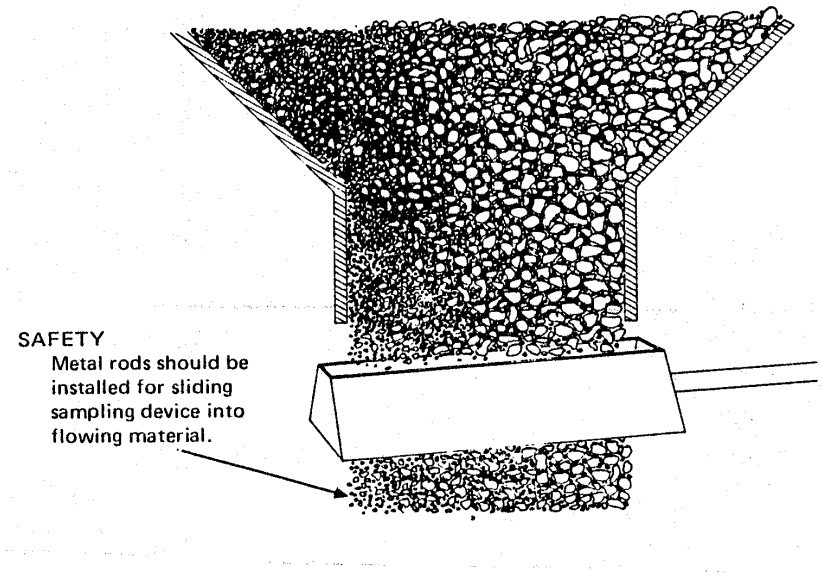

Figure 6-12: Correct Use of Sampling Device

(B) SIEVE ANALYSIS OF EACH BIN

A sieve analysis will be run on each sample taken from the hot bins. This is done as soon as the samples cool down to the point they can be handled. The equipment and test procedures are those specified for running sieve analysis of coarse and fine aggregates according to AASHTO T-27 Modified. The information is recorded on the standard form B-75-2 (See Fig. 6-13).

(C) DETERMINING HOT BIN PERCENTAGES

Once the gradation of material in each hot bin is determined, the percentage to be pulled from each bin to meet the job mix formula gradation can be calculated. This is best done by use of a trial and error method.

In determining proper calibration of the hot-bin feeds, the job-mix formula is the starting point. It is necessary to determine what percentage of each size of the aggregate in the hot bin should be incorporated into the mix in order to meet the job mix formula gradation requirements. It should be stressed that there can be numerous sets of hot bin pull percentages that are correct. Any combination of bin materials that will meet the job mix formula gradations, with the Specification tolerances applied, will be acceptable and satisfactory. The purpose of this trial and error Form B-75-2 procedure is to arrive at a starting point for plant production to ensure that the mix will be reasonably close to our job mix formula.

First the gradation of material in each of the hot bins is determined. Aggregate proportions are then estimated as follows. (Reference should be made to Fig. 6-13 to work through this estimation process).

The raw material passing the 2.36 mm sieve and the 0.075 mm sieve is used as a starting point. Of the three hot bins used for this S12.5 C mix, bin No. 1 carries most of the minus 2.36 mm and minus 0.075 mm material. This will generally be true in all batch plants since the screen over the No. 1 bin is of such size to normally control the mix gradation from the 2.36 mm sieve down through the 0.075 mm sieve. This being the case, the 2.36 mm sieve through 0.075 mm sieve gradations in the asphalt mix can be controlled by the percentage of material pulled from the No. 1 hot bin.

Beginning with the 2.36 mm, the job mix formula requires that 52 percent pass this sieve. Note that there is 93 percent passing the 2.36 mm sieve in hot bin No. 1. Since this 93 percent represents the majority of minus 2.36mm material in all three hot bins, the 52 percent required in the mix can be controlled from this 93 percent. The 52 is divided by the 93 for a percentage result of 56 percent that is to be pulled from the No. 1 bin. In other words, what percent of the No. 1 bin minus 2.36 mm material is needed to give the desired percent passing the 2.36 mm on the job mix formula. The 0.075 mm sieve is now checked in the same manner, as was the 2.36 mm above. The job mix formula requires that 4.8 percent pass the 0.075 mm sieve. The No. 1 bin has 8.9 percent minus 0.075 mm material. The 4.8 is divided by the 8.9 for a result of 54 percent.

Either the 56 percent (arrived at by use of 2.36 mm) or the 54 percent (arrived at by use of 0.075 mm) will meet the job mix formula requirements. The example in Fig. 6-14 uses 55 percent out of hot bin No. 1.

As the hot bin containing the finest graded material had certain characteristics that enabled us to control certain portions of our mix gradation, so does the hot bin containing the coarsest graded material. This characteristic is different, or opposite, from that in the fine bin in that this is large stone, which is generally retained on the majority of sieves instead of passing most sieves. This retainage characteristic is used to estimate the percentage to be pulled from the bin containing the most coarse material.

The example in Fig. 6-13 uses three hot bins to make this S12.5 C mix, with No. 3 bin containing the coarsest graded material. (The hot bin farthest to the right from the plant's hot elevator will always contain the coarsest material.) Keep in mind that the No. 1 hot bin is already set at 55 percent which controls the 2.36 mm through 0.075 mm sieves; therefore, we need not be concerned about these sieves any more. The concern now is for the sieves above, or larger than, the 2.36 mm.

In order to select a controlling sieve which determines the amount to pull out of the No. 3 bin, the gradation for all sieves above the 2.36 mm in all three bins need to be compared. The first sieve above the 2.36 mm that differs drastically in gradation, from that same sieve's gradation in the Nos. 1 and 2 bins, will be the controlling sieve. The 4.75 mm is the first sieve above the 2.36 mm. The 4.75 mm gradation is 98 percent in the No. 1 bin, 89 percent in the No. 2 bin, and 13.6 percent in the No. 3 bin. The 4.75 mm sieve gradation is very much different in bin No. 3 from that in Bin Nos. 1 and 2; therefore, this will be our controlling sieve. These gradations show that there is

basically no plus 4.75 mm material in bin Nos. 1 and 2, with bin No. 3 containing 86.4 percent plus 4.75 mm; therefore, bin No. 3 is the only bin from which the plus 4.75 mm material in the mix can be controlled. The job mix formula requires that 70 percent pass the 4.75 mm sieve, which means that 30 percent would be retained on that sieve. Since the No. 3 bin is basically the only hot bin with plus 4.75 mm material, 30 percent would be pulled from this bin in order to have 30 percent plus 4.75 mm in the mix.

The remaining bin (No. 2 in our example) will be set at the difference between 100 percent and the total percent of bin Nos. 1 and 2. This would be 100 minus 85 (55 plus 30) or 15 percent to be pulled out of the No. 2 bin. At times only two hot bins will be used. In those cases, the No. 1 hot bin will be set as outlined previously and the balance percentage will be pulled from the No. 2 bin. Also, there will be times when four hot bins will be used for 19.0 mm and 25.0 mm mixes. In these cases, the Nos. 1 and 4 hot bins will be set as previously outlined and the balance percentage should be split 1/3 out of the No. 2 bin and 2/3 of the balance out of the No. 3 bin. This 1/3:2/3 split comes from experience and has proven to normally meet the job mix formula needs.

After deciding on a set of hot bin percentages, it is necessary to verify that these percentages will meet the job mix formula requirements. This is done by blending the hot bin materials together, on paper, at the percentages decided upon. Following this procedure through in our example, it will be seen that the 55-15-30 percent combination of hot bin materials will produce a mix gradation that is very close to the job mix formula.

Form B-75-2

Aggregate Blending Worksheet

Project Number **8.11223344** Hot Bin **X** Stockpile _____ Date **5/27/2004** Time **12:30**
County _____ Cold Feed _____ Other _____ Contractor **Quality Asphalt Paving Co.**
Type Mix **S 12.5 C** JMF No. **04-004-141** Plant Location **Everywhere NC.**

Material													Rap	M.F.	Combination						Gradation	
Source	Hot Bin 1			Hot Bin 2			Hot Bin 3						Rap Bin		of Materials							
Sample Wt.															Hot Bin, Stockpile							
Dry Wt.	850.0			1103.0			1215.0								or Cold Feed							
% Moist.															1	2	3	4	Rap	M.F.	**Blend**	**JMF**
	Acc. Wt.	% Ret.	% Pass	Acc. Wt.	% Ret.	% Pass	Acc. Wt.	% Ret.	% Pass	Acc. Wt.	% Ret.	% Pass	% Pass		%	%	%	%	%	%		
Sieve Size															**55.0**	**15.0**	**30.0**				100.0	
50.0 mm			100.0			100.0			100.0						55.0	15.0	30.0				100	100
37.5 mm			100.0			100.0			100.0						55.0	15.0	30.0				100	100
25.0 mm			100.0			100.0			100.0						55.0	15.0	30.0				100	100
19.0 mm			100.0			100.0			100.0						55.0	15.0	30.0				100	100
12.5 mm			100.0			100.0	142.0	11.7	88.3						55.0	15.0	26.5				96	95
9.50 mm			100.0			100.0	440.0	36.2	63.8						55.0	15.0	19.1				89	89
4.75 mm	18.0	2.0	98.0	125.0	11.3	88.7	1050.0	86.4	13.6						53.9	13.3	4.1				71	70
2.36 mm	59.5	7.0	93.0	960.0	87.0	13.0	1200.0	98.8	1.2						51.2	1.9	0.4				53	52
1.18 mm	290.0	34.1	65.9	1030.0	93.4	6.6	1205.0	99.2	0.8						36.2	1.0	0.2				37	37
0.600 mm	425.0	50.0	50.0	1090.0	98.8	1.2	1208.0	99.4	0.6						27.5	0.2	0.2				28	28
0.300 mm	540.0	63.5	36.5	1092.0	99.0	1.0	1213.0	99.8	0.2						20.1	0.1	0.0				20	20
0.150 mm	700.0	82.4	17.6	1100.0	99.7	0.3	1213.0	99.8	0.2						9.7	0.0	0.0				10	10
0.075 mm	774.0	91.1	8.9	1101.0	99.8	0.2	1214.0	99.9	0.1						4.9	0.03	0.02				5.0	4.8
Pan	850.0			1130.0			1215.0															

Total Moisture Blend: _____

Test Performed by: *T. B. DeMan*

Figure 6-13

(D) CALCULATING BATCH WEIGHTS

After determining the proportions required for each hot bin, we can calculate the weight of asphalt binder and the amount of aggregate to be pulled from each bin to produce a single batch of asphalt mix.

First, we select a batch size, which will be mainly dependent upon the pugmill capacity of the asphalt plant. Assume that we have a 4,000 lbs. (1,818 kg) capacity pugmill.

Summarize the information we have available:

Batch size----------4,000 lbs. (1,818 kg)
% Binder----------5.8% (given on JMF)
Bin #1 (% to be pulled)----55%
Bin #2 (% to be pulled)----15%
Bin #3 (% to be pulled)----30%

From Trial and Error Method in Sect. 6.5.9(C)

From this information, the weight of asphalt binder in each batch can be calculated by multiplying the batch weight by the percentage of asphalt binder in each batch:

4000 lbs. (1,818 kg) x 0.058 (5.8%)= 232 lbs. (105 kg)

The total weight of aggregates in each batch is determined by subtracting the weight of the asphalt binder from the total batch weight:

4000 lbs. (1,818 kg) – 232 lbs. (105 kg) = 3768 lbs. (1,711 kg)

Knowing the total weight of all aggregates needed for a batch of asphalt hot-mix, along with the estimated hot bin percentages, allows calculation of the weights of aggregate to be pulled from the bins. This calculation is shown below.

Bin	Proportion Percent		Aggregate Weight		Required Weight
No. 1	55 percent	x	3768 (1,711 kg)	=	2,073 lbs. (941 kg)
No. 2	15 percent	x	3768 (1,711 kg)	=	565 lbs. (257 kg)
No. 3	30 percent	x	3768 (1,711 kg)	=	1,130 lbs. (513 kg)
	Total Aggregate Weight			=	3,768 lbs. (1,711 kg)

(E) SETTING THE BATCH WEIGHTS

(1) AGGREGATE SCALES:

From the hot bins the aggregates are withdrawn for deposit into a weigh hopper. The weigh hopper is suspended from scale beams and weighs accumulatively the amounts of aggregate entering it. (See Fig. 6-14)

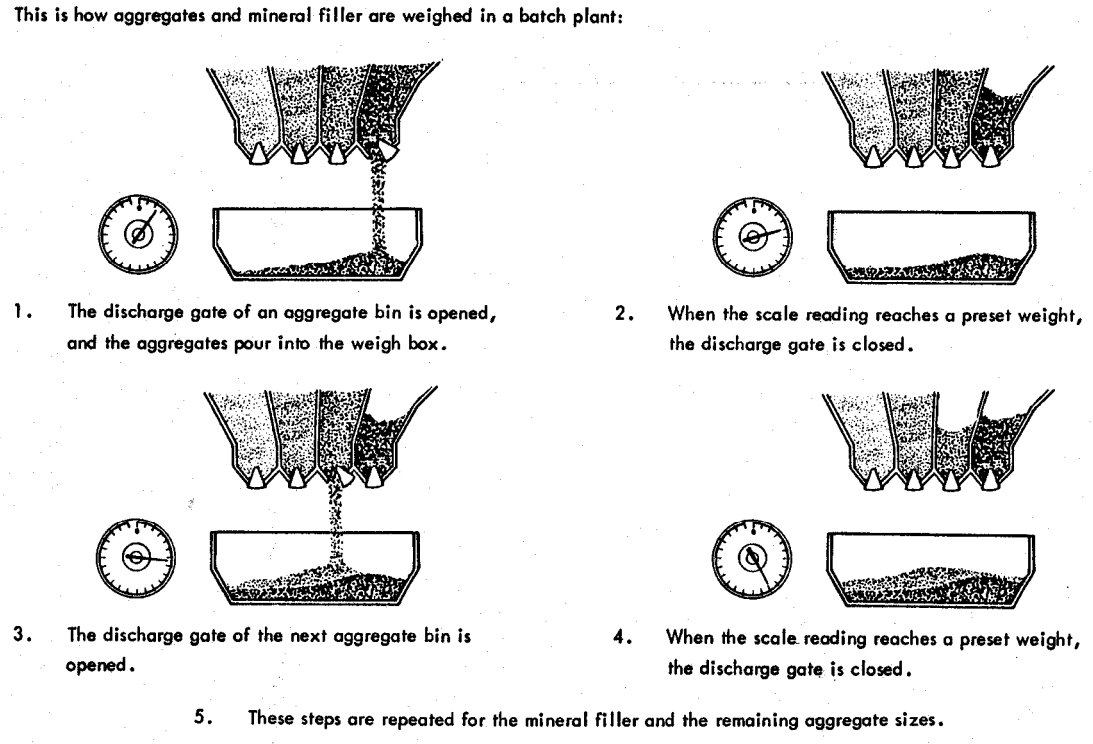

Figure 6-14
How Cumulative Scale Settings Are Used To Control Material Amounts Pulled From Hot Bins

The weights to be pulled should be arranged in the order best suited for the plant. The Contractor or Producer will select the sequence of loading the weigh hopper. In most plants, the coarse aggregate is drawn first, so that the fine aggregate will not leak through the weigh hopper gate. Once the bin order has been determined, the bin weights are set accumulatively on the aggregate scale dial. The scale settings are established as follows:

Bin No.	Bin Order	Req'd. Bin Weight (lbs / kg)	Accumulative Scale Setting (lbs / kg)
1	1	2,073 (941 kg)	2,073 (941 kg)
2	2	565 (257 kg)	2,638 (1,198 kg)
3	3	1,130 (513 kg)	3,768 (1,711 kg)

These settings should be marked on the scale and used until adjustments are required. (See Fig. 6-15)

Bin Batch Sequence 1, 2, 3

Hot Bin #1 = 2,073 lbs. (941 kg)

Hot Bin #2 = **Hot Bin #1** 2,073 lbs. (941 kg) +
Hot Bin #2 565 lbs. (257 kg) = 2,637 lbs. (1,198 kg)

Hot Bin #3 = **Hot Bin #1** 2,073 lbs (941kg) +
Hot Bin #2 565 lbs. (257 kg) +
Hot Bin #3 1,130 lbs. (513 kg) = 3768 lbs. (1,711 kg)

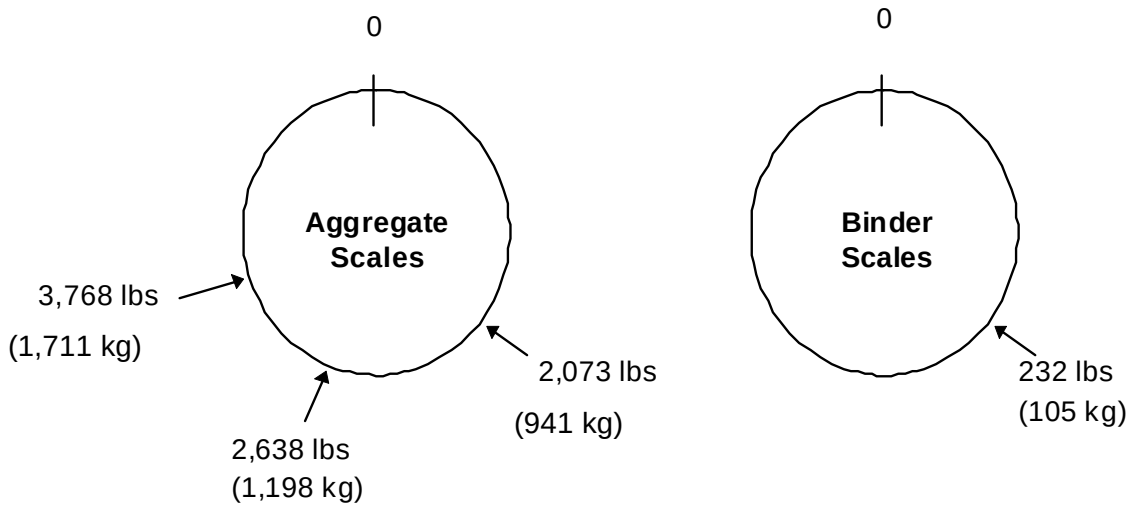

Figure 6-15: Asphalt Plant Scale Settings

(2) ASPHALT BINDER SCALES:
From the weigh hopper, the aggregates are deposited into the plant's pugmill (mixing chamber), where they are blended with the proper proportion of asphalt binder. In a typical plant system, asphalt binder is weighed separately in a weigh bucket before being introduced into the pugmill. (See Fig. 6-16). This weight is set on a separate asphalt binder scale from the aggregate scales. From the previous computations, our asphalt binder scales setting would be 232 lbs. (105 kg). (See Fig. 6-15)

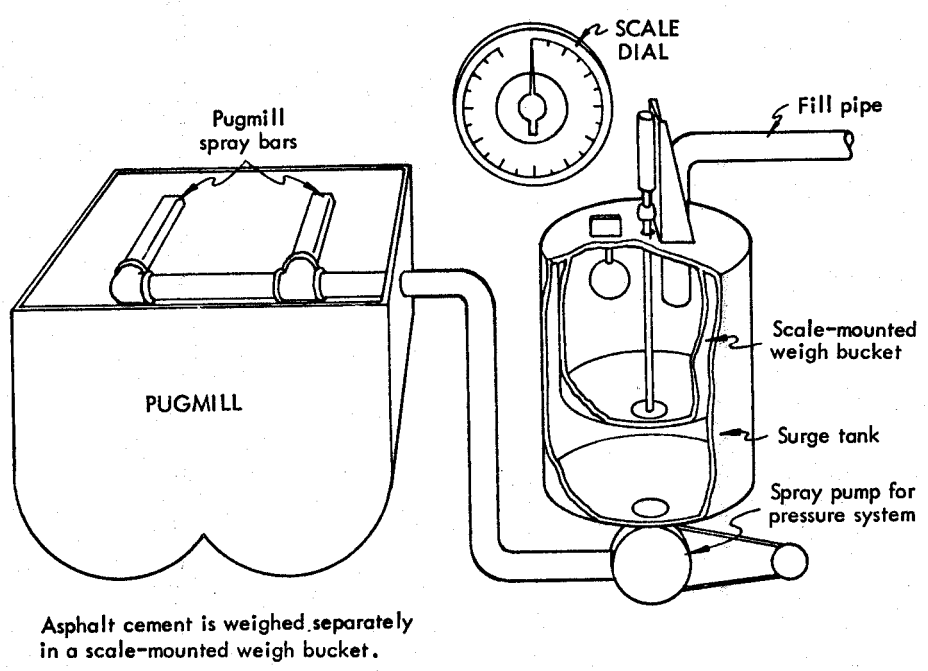

Figure 6-16: Typical Asphalt Binder Measuring and Delivery System

(3) AUTOMATIC PLANTS:

The batch weights for the mix are normally set on the control panel of an automatic plant by various formula setting devices. The three methods used on most automatic plants are as follows:

(a) Preset Dial Type:

Each dial is set to the individual weight to be pulled from the corresponding hot bin. A separate dial is also used for the asphalt binder.

(b) Batch Plug:

A batch plug consists of several potentiometers; each set for the individual component weight and enclosed in a case about half the size of a cigarette pack. A number of these can be stored at the plant for various mixes.

(c) Central Processor Unit:

Computer System capable of storing different mix types, printing batch weights and controlling most plant operations.

6.6 "DRUM MIX" PLANT OPERATIONS

Drum mixing is a relatively simple process of producing asphalt hot-mix. The mixing drum from which this type of plant gets its name is very similar in appearance to a batch plant dryer drum. The difference between drum-mix plants and batch plants is that, in most drum-mix plants the aggregate is not only dried and heated within the drum, but also mixed with the asphalt binder. However, there are some more recent model drum mix plants that introduce the asphalt binder outside the drum. The addition of a coater box, which is a pugmill type device, located at the discharge end of the drum allows the asphalt binder to be added into the coater box instead of into the drum. Still other "double barrel" type drum mix plants will add the asphalt binder between an inner and outer drum. The basic concept of all these types is the same though -- a continuous mixing process as compared to the mixing of batches at batch plants. There are no gradation screens, hot bins, weigh hoppers or pugmills in a drum-mix plant. Aggregate gradation is controlled at the cold feed.

6.6.1 Cold Feed System

Since the drum mix plant does not incorporate a gradation screening unit, the aggregate must be accurately proportioned prior to entry into the mixing drum. Mix gradation and uniformity are entirely dependent on the cold-feed system. The plant must be equipped with provisions to conveniently obtain representative samples of the full flow of material from each cold feed and the total cold feed for calibration purposes. Calibration of the cold feeds to determine compliance with the job mix formula is essentially the same as for batch plants. The technician should refer to Section 6.4 for these procedures and frequency of calibration.

Each feeder shall be equipped with an automatic device which activates a warning alarm and/or flasher light when any bin becomes empty or when aggregate flow becomes restricted. The automatic device shall be interlocked into the plant control system so as to automatically stop production if normal aggregate flow is not resumed within 60 seconds. Each feeding system shall be so constructed that samples can be readily obtained.

6.6.2 Vibratory Scalping Screen

A vibratory screening system capable of removing all oversize materials for the particular mix being produced shall be provided prior to entry of the aggregate into the dryer-drum mixer. Normally, a screen size just slightly larger than the maximum aggregate size for the type mix being produced is satisfactory. It is also desirable that the scalping screen unit be located just after the material leaves the cold feed bins and prior to the material passing over the weigh bridge of the aggregate weighing system. This serves to uniformly distribute the material on the belt and results in less fluctuation of the aggregate feed rate data being conveyed to the plant control blending system.

6.6.3 Weight Measurement of Aggregate and RAP/RAS (Quarterly Calibration)

Before calibrating the weight measurement of either the aggregate or RAP/RAS (when used), the Contractor must give the appropriate division QA Supervisor at least two days notice to allow the QA supervisor an opportunity to observe this calibration. Drum-mix plants require a continuous weighing system on the cold feed conveyor belts (including RAP/RAS conveyor belts). In-line belt weighing devices, also called weigh bridges (Figure 6-17) are continuous belt-weighing devices used for this purpose. Combined aggregates or RAP/RAS passing over the conveyor belt are continuously weighed and a readout (in the control room) indicates the weight of the flow over the scale at any given instant. No material should ever be diverted from the conveyor belt after it passes the belt weigh bridge during actual production.

Figure 6-17 shows one of the conveyor idlers (designated the weigh idler) of the belt weigh bridge which is mounted on a pivoted scale carriage. As the loaded belt passes over this idler, the weight is read in tons and/or tons per hour and a reading displayed at the control console in the control trailer. This reading is normally corrected to account for moisture in the aggregate (since dry-aggregate data is used to establish the required percentage of asphalt binder) and is a key reading in monitoring plant operations.

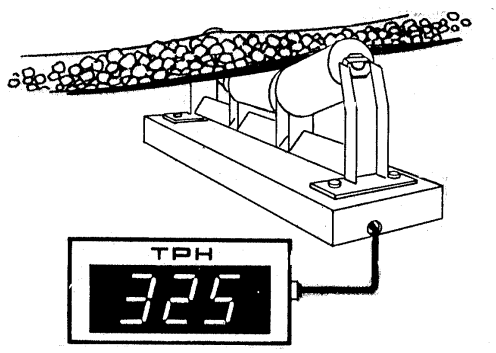

Figure 6-17: Weigh Bridge

The in-line belt weigh bridge is usually located midway between the head and tail pulley of the cold feed belt conveyor. This location tends to lessen variations in reading caused by impact loading, roll-back of aggregate or changes in belt tension. A quarterly check of this device should be performed to ensure this accuracy. For this frequency, quarterly is defined as once within each calendar quarter not to exceed 90 days apart. The device must be accurate within ±0.5 percent at normal production rate.

There are several various methods for checking these weigh bridges. Any method that will verify that the actual weight passing across the weigh bridge as compared to the plant's digital readout will be satisfactory. Some of these methods are briefly described next. These methods apply to and are acceptable for either virgin aggregate weigh bridges or RAP/RAS weigh bridges.

Before running either method, it is suggested that at least 4 tons (4 metric tons) of one size aggregate be passed over the cold feed conveyor belt and into a truck by means of a diversion chute. This quantity can then be dumped back onto the stockpile. This precaution insures proper seating of the conveyor belt on the rollers and insures better accuracy. If this precaution is not taken, the first test may give misleading results.

If the plant controls are equipped with a readout that gives actual weight (tons, not tons per hour) crossing the weigh bridge, this check is as follows. First, set the plant's moisture compensator to zero and then zero out the belt scales. Next, run approximately 15 tons (15 metric tons) of clean coarse aggregate for aggregate weigh bridges or a minimum of 10 tons for RAP and RAS weigh bridges across the

appropriate weigh bridge at normal production rate, and check the readout weight by use of a certified set of scales.

A coarse aggregate is preferable due to less chance of loss of fines during the weighing process, less moisture in the material, and ease of handling as compared to finer materials. Means should be provided for diverting the aggregate into trucks, or other containers. This is normally done by use of a diversion chute located at the end of the cold feed conveyor belt. The quantity of test material will be run across the weigh bridge, through this diversion chute into a container, and then weighed on an approved set of scales. The net weight will then be determined by subtracting the container weight from this gross weight. This net weight is then compared with the weight reading displayed in the plant control console. The readout should compare within ± 0.5% of this net weight.

The plant may be equipped with a weigh bridge digital readout that only gives a rate in tons per hour. In this case, the above procedure can generally be used but the actual weight will be converted to tons per hour. When making these checks, it is very important that the plant be operated at normal production rate and this rate be uniformly maintained during the test. As above, approximately 15 tons (15 metric tons) of clean coarse aggregate for virgin aggregate bins or 10 tons for RAP or RAS bins will be run across the weigh bridge, through a diversion chute into a container, weighed, and a net weight determined. The difference being that this is a timed test to be performed over some measured period of time. Time the material from its first crossing the weigh bridge until the last material clears the weigh bridge. The conversion to tons per hour is made by use of the following formula:

$$\text{tons/hr.} = \frac{\text{net weight of aggregate (lbs.)}}{2{,}000} \times \frac{60}{\text{time of test (mins.)}}$$

$$\text{Metric tons/hr.} = \frac{\text{net weight of aggregate (kg)}}{1{,}000} \times \frac{60}{\text{time of test (mins.)}}$$

This figure is compared to the weigh bridge tons per hour shown on the readout. The readout must be within the ± 0.5% accuracy of the computed rate for either aggregate scales or RAP/RAS weigh bridges.

Any necessary adjustments are made in the electronics of the weigh bridge scale to compensate for the difference between the actual weight or tons per hour and the digital readout. This adjustment is the Contractor's responsibility.

In drum-mix plants the aggregate is weighed before drying. Since the undried material may contain an appreciable amount of moisture that can influence the aggregate's weight, an accurate measurement of aggregate moisture content is important. From this measurement, adjustments can be made to the automatic asphalt binder metering system to ensure that the amount of asphalt binder delivered to the drum is proper for the amount of aggregate minus its moisture content.

The Technician should monitor the moisture content of the cold feed aggregate before beginning each day's operation and again about the middle of the day, and the Contractor should adjust the moisture control equipment accordingly. If the moisture content is believed to vary during the day, it should be checked more frequently. The moisture content may be determined manually or electronically. A minimum of one moisture test per normal day's operation shall be performed by the plant technician. See Section 7 of this manual for moisture test procedures. Provisions must be made for electronically correcting wet aggregate weight readings to dry aggregate weight readings in the plant control system.

6.6.4 Asphalt Binder Meter System (Quarterly Calibration)

Before this calibration is performed, the Contractor must give the appropriate division QA Supervisor at least two days notice to allow the QA supervisor an opportunity to observe this calibration. Most drum-mixers are typically equipped with a device (Fig. 6-18) to add asphalt binder to the aggregate inside the drum mixer. Some more recent model drum mix plants may be equipped to add the asphalt binder to the aggregate outside the drum-mixer into a coater box, which is a pugmill type device.

Still other "double barrel" type drum plants will add the asphalt binder between an inner and outer drum. Either of these will utilize an asphalt binder metering and delivery system which is a continuous mechanical proportioning system interlocked with the aggregate weigh system to ensure the exact asphalt binder content of the mix. The weight of aggregate going into the mixer, as measured by the weigh belt, is the basis of determining the quantity of asphalt binder delivered into the drum or coater box, whichever is applicable.

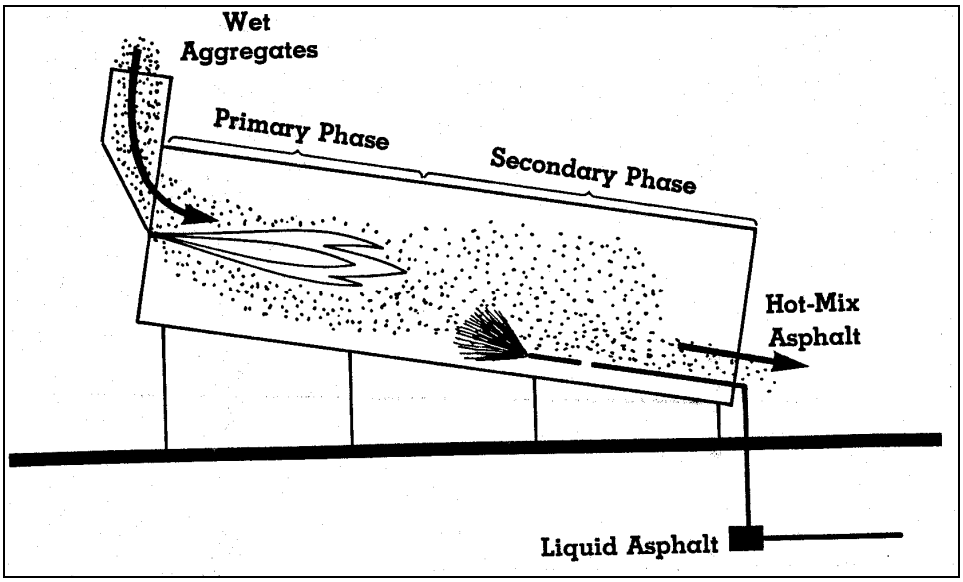

Figure 6-18
Zones in Drum Mixer

Most metering systems measure the volume (liters/gallons) of asphalt binder being delivered by use of a volumetric flow meter. This volume must be converted to a weight rate of flow. Since the volume and weight are temperature dependent, the plant control system must include a means to allow for temperature and specific gravity variations in asphalt binders. The system must also have a temperature indicating device in the asphalt binder feed line. Procedures for making these adjustments are usually included in the manufacturers plant operations manual.

Some few drum mix plants are equipped with mass flow meters that measure the mass of asphalt binder being delivered instead of volume. These normally read out in a weight, instead of a volume, and are not temperature and/or specific gravity dependent.

The proportioning of asphalt binder is accomplished by establishing the necessary rate of asphalt binder delivery to match the aggregate delivery rate in tons of dry aggregate per hour. The asphalt binder delivery rate is automatically increased or decreased proportionately according to the corrected dry weight measurement of aggregate passing over the belt scale. The rate of asphalt binder delivery is normally indicated in tons per hour on a rate meter on the control panel.

Means must be provided for checking the accuracy of the asphalt binder metering system. This check should be performed at a minimum of quarterly and should check within ±0.5 percent accuracy. For this frequency, quarterly is defined as once within each calendar quarter not to exceed 90 days apart.

Most drum-mixer plants are equipped with a by-pass valve system which will allow the asphalt binder to be pumped through the flow meter and into a container, instead of into the drum-mixer. By means of this by-pass system, a minimum of 500 gallons (1,893 liters) (or the appropriate quantity as recommended by the manufacturer) will be pumped off into a container. Due to the quantity to be pumped off, this container will normally be either an asphalt distributor tanker or a supply tanker. This container will need to have been previously weighed empty, in order to obtain the net weight of the pumped-off asphalt binder. These weights should be made by use of a certified set of scales of sufficient capacity. The net weight of the asphalt binder should be compared to the number of gallons shown pumped through the flow meter, if a volumetric flow meter is being used, or compared to the weight shown if a mass flow meter is being used. If a mass flow meter is being checked, a direct weight to weight comparison is made and no conversion is necessary. If a volumetric flow meter is being checked, a conversion of either pounds to gallons (kg to liters), or gallons to pounds (liters to kg), will have to be made in order to make the necessary comparison. This conversion can be made by use of one of the following formulas.

$$\text{Gallons} = \frac{\text{Pounds (Net Wt)}}{8.33 \times \text{Binder Specific Gravity @ } 60° (15.6^{0}\text{ C})}$$

$$\text{Pounds} = \text{Gallons} \times 8.33 \times \text{Binder Specific Gravity @ } 60° (15.6^{0}\text{ C})$$

$$\text{Liters} = \frac{\text{Kg (Net Wt)}}{1.0 \times \text{Binder Specific Gravity @ } 60^{0}\text{ F } (15.6℃)}$$

$$\text{Kilograms} = \text{liters} \times 1.0 \times \text{Binder Specific Gravity @ } 60^{0}\text{ F } (15.6℃)$$

The specific gravity at 60℉ (15.6℃) should be given on the asphalt binder delivery ticket. The above conversion formulas are useable only if the drum-mixer plant is equipped with systems that automatically compensate for varying asphalt binder temperatures and specific gravities. It is very important to be sure these compensating systems are operating correctly before checking the metering system. Most manufacturers' manuals contain instructions for checking to see if these systems are functioning properly.

The plant manual should always be consulted prior to the meter check for the manufacturer's recommended procedures. This is important because some plant meter readouts show weights, some show gallons (liters) @ 60℉ (15.6℃), and others show liter s (gallons) @ the actual binder temperature. The plant manual will always give the correct method of calibration and conversion.

The flow meter readout should check within ± 0.5% accuracy. Any necessary adjustments to be made to the metering system are the Contractor's responsibility. Use form QC-2 (see Section 11) for documentation of this meter check.

The plant control read-out will show binder tons per hour being added to the mix. This read-out figure is calculated by the plant control computer system utilizing the aggregate weigh bridge weights and the JMF % binder. This read-out should be mathematically checked occasionally to be sure that the binder quantity is being calculated correctly. The following formula should be used for this calculation:

$$TPH_{BINDER} = TPH_{DRY\ AGG.} \left(\frac{JMF\ P_b}{100 - JMF\ P_b} \right)$$

EXAMPLE CALCULATION:

Given: $JMF\ P_b$ = 6.2% (From JMF)

$TPH_{DRY\ AGG.}$ = 160.0 (From Agg. Weigh Bridge)

TPH_{Binder} = 160.0

TPH_{Binder} = 160.0 (0.06609808)

TPH_{Binder} = 10.6 $\left(\frac{6.2}{100 - 6.2} \right)$

This calculated TPH binder number should be within approximately 8% -10% (not tons per hour) of the readout.

If the plant is equipped with an additive metering system it should be calibrated at the same time the binder meter is calibrated. This system should be accurate within ± 10% of amount specified. A similar process to the binder meter calibration will be followed except that only a minimum of 19 liters (5 gallons) must be pumped off and weighed on calibrated scales of sufficient capacity.

6.6.5 Anti-Strip Additive Meter System (Quarterly)

If the anti-strip additive is introduced into the binder at a drum mix plant, the additive meter system shall be calibrated quarterly in accordance with the procedures in Section 6.5.8 (D) of this Manual.

6.6.6 Documentation

Drum plant weigh bridges / asphalt binder meters calibration Form QC-2 (see Section 11) and/or certification by the Department of Agriculture or a certified scale company will suffice for either the initial check or for a periodic check, provided the date of the certification is within the time frame noted. A single scales check may and should serve for several different projects if the check was conducted within the above noted time. Form QC-2 (see Section 11) should be submitted to the Division QA Supervisor at the completion of each scales check.

As noted, the QC Technician should post a copy of Form QC-2 in the QC Laboratory when the scales are actually calibrated. A copy shall also be furnished to the appropriate Division QA Supervisor.

6.6.7 Drum-Mixer Dryer

The heart of the drum-mix plant is the drum dryer itself (See Fig. 6-18). The dryer is similar in design and construction to a conventional rotary dryer, except that most drum dryers utilize the parallel flow principle as opposed to the counter flow principle used in conventional batch plants. The burner is mounted at the high end of the drum where the cold proportioned aggregates are introduced. By using this approach, the hottest gases and flame are at the charging end of the drum. When the asphalt binder is introduced further down the drum, it is protected from the excessive harmful effects of the burner flame by the evaporating moisture on the aggregate. The exception to this is the newer model double barrel drum mix plants which have the burner located on the lower end of the drum with the aggregate flow being toward the flame. This is because the inner drum of this type plant serves the purpose of a drying chamber only and not that of a mixing chamber.

Some more recent model drum mix plants have been modified from the more conventional method, to methods that will further protect the asphalt binder from excessive heat. The addition of a coater box at the discharge end of the drum and the double-barrel drum mix plants both serve this purpose. The asphalt binder may be added into the coater box or between the inner and outer drums; both being removed from direct flame exposure. The mix temperature is monitored on all type drum plants by a thermometric device in the dryer discharge chute, which automatically activates the burner controls, and therefore, controls the mix temperature.

NCDOT Specifications require that dryer drum mixers have a rated capacity of at least 90 tons (82 metric tons) per hour when producing a finished mixture at 300℉ (149℃) with removal of 5 percent moisture from the combined aggregate.

6.6.8 Surge-Storage Bins (Silos)

In a drum-mix operation, which produces a continuous flow of fresh asphalt hot mix, it is necessary to have a surge silo for temporary storage of the material and for controlled loading of trucks. A weigh system may be connected to the holding bin of the silo to monitor the amount of material loaded into each truck. Weight measurements are normally recorded by the weigh system control panel, located in the control van or trailer.

Insulated silos or bins can store hot mix up to 12 hours with no significant loss of heat or quality. Capacities range as high as several hundred tons. Non-insulated storage structures are usually quite small and can store hot mix only for short periods of time.

Storage silos work well if certain precautions are followed, but they can cause segregation of the mix if not used properly. It is good practice to use baffle plates, a batching hopper, a rotating chute, or similar devices at the discharge end of the conveyor used to load the silo. These devices help to prevent the mix from coning and segregating as it drops into the silo. It is also recommended to keep the silo at least one-third full to avoid segregation as the silo empties and to help to keep the mix hot.

Hot mix is dumped into the top of the bin and falls vertically into the structure. The bin must be designed so that segregation of the mix is held to a minimum. **The subsequent loading of trucks should be made with a minimum of three dumps (See Figure 6-19 below).** Three-dump loading as illustrated below greatly reduces the risks of segregation. Frequent visual checks of the mix must be made by the QC Technician to make certain segregation has not occurred during the charging of the bin and/or during loading into trucks. **Coarse mixes must be watched closely since they are more subject to segregation.**

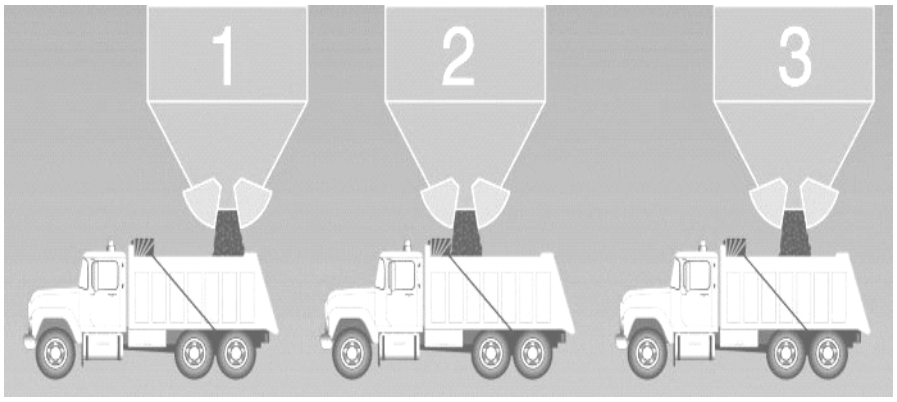

Figure 6-19: 3-Dump Loading of Truck

Sample of the mix for testing purposes will be taken directly from the truck body in accordance with procedures outlined in Section 7 of this manual.

6.7 SEGREGATION OF ASPHALT MIXTURES

Segregation refers to a condition in asphalt in which there is non-uniform distribution of the various aggregate sizes across the mat to the point where the mix no longer conforms with the specified job mix formula. Segregation is the tendency of larger particles to separate from a mass of particles of different sizes under certain conditions.

Segregation may be brought about by the methods of mixing, storing, transporting, and handling the mix wherein there is a condition created that favors non-random distribution of the aggregate sizes. Segregation problems are most often associated with drum mix plants. There is, however, nothing to indicate that drum mix plants themselves are more prone to segregation problems than batch plants. Segregation in asphalt pavements is more closely associated with surge-storage systems, which are most

often used with drum mix plants. The previous Section 6.6.8 explains the uses of these surge-storage systems, inherit segregation problems, and some possible solutions.

Coarse graded mixes, such as the 25.0 mm Base mixes, are naturally more prone to segregate due to their stone content, low asphalt binder content, and possible gap-grading. Finer graded mixes, such as the 9.5 mm and 12.5 mm surface mixes, do not tend to have severe segregation problems for the opposite reasons of those noted with coarse graded mixes.

Segregation can originate at virtually any point in the process of asphalt production. It can get its start in the mix design, in the aggregate stockpile, in the cold-feed bin, in the batch plant hot bin, in the drum mixer, in the drag-slat conveyor, or in the surge-storage bin. In some cases, segregation doesn't start until the truck is being loaded out. The earlier segregation begins during the process, the worse the problem tends to be due to more movement of the mix in completing the process. Whenever segregation does occur, all of these areas should be closely monitored for their extent of contribution to the problem.

The solution to segregation problems usually lies within several of these problem areas. Modifications in the mix design may be needed; improper handling of the aggregates may need to be addressed; modifications to the plant, drag-slat conveyor, and/or the surge-storage bin may be necessary; and the handling and movement of the mix through the surge-storage bin and into the truck. It's most important to remember that for whatever the reason and at whatever the location segregation begins, after it does, any unrestricted movement, especially down slope movement, will compound the problem drastically. Because of this, down slope movement of the mix should be kept to a minimum throughout the asphalt process.

Reference should be made to the segregation diagnostic charts in the Appendix for possible solutions to various types of segregation problems.

6.8 SCALES AND PUBLIC WEIGHMASTER (ARTICLE 106-7)

Specifications for weighing asphalt materials, which are to be paid for on a ton (metric ton) basis, can be found in Article 106-7 of the Standard Specifications. This Article requires that any scales, which are to be used to determine the weight for payment purposes, shall be certified by the North Carolina Department of Agriculture and Consumer Services. This may include platform scales and/or the plant aggregate and asphalt binder scales, depending upon which scales are being used by the Contractor's public weighmaster to issue the weight certificate. ***See Section 5.9 of this manual for specific details of the NCDA & CS certification requirements***. Requirements for automatic weighing, recording and printing of tickets are listed under Article 106-7. It should be noted that this Article also requires that the JMF No. be recorded on each asphalt weigh ticket. Also included in this same Article are provisions for checking the scales by re-weighing a truck load of material on another set of approved platform scales.

It is the Resident Engineer's and QA Supervisor's responsibility to assure that the Contractor is meeting the requirements of Article 106-7 before any weight certifications are issued. The requirements of this Article or approval of the weighing equipment is not covered by the plant certification.

6.8.1 Weight Certificates - General

Weigh tickets provide essential records for the control of project operations, quality, and quantity of mix delivered. Although different systems are used by various agencies, certain items related to tickets remain generally the same from project to project. Weight certificates (weigh tickets numbered consecutively) are generally issued at the asphalt plant. They must state the project number, the origin of the load, time loaded, the temperature and weight of the load, the truck number, the type of mix, the JMF

Number, Plant Certification Number and location (station number) where the mix was placed. It will also list the weight and roadway temperature of the mixture. See Section 10.1.3, the Project Special Provisions, and the Construction Manual for detailed requirements for asphalt weigh tickets.

6.9 HAULING OF ASPHALT MIXTURES

The QC and QA technicians must inspect truck bodies in which the mix is to be hauled to be sure that they comply with the Standard Specifications. The truck body should be inspected to make sure that the bed has been lightly coated with an approved release agent to prevent the mixture from adhering to the bed. After the bed is coated, any excess solution must be adequately drained before any mix is allowed to be loaded. Excess solution can be extremely detrimental to mixture in which it comes in contact. **Fuel Oil and Kerosene shall not be used**. For approved list of truck release agents, contact the Asphalt Design Engineer.

The mixing temperature at the asphalt plant will be established on the job mix formula. See Section 6.1.2. for the normal Superpave mixing temperatures. Plant and Roadway Technicians should always refer to the most current Job Mix Formula for the correct mixing temperature. The temperature of all mixes when checked in the truck **at the asphalt plant** shall be within ±15° F (±8° C) of the JMF temperature. The temperature of the mix immediately prior to discharge from the hauling vehicle **at the roadway** shall be within +15° F (+8° C) to -25° F (-14° C) of the JMF temperature.

The mix should be observed frequently and the temperature checked at regular intervals and recorded (See Fig. 6-20). The Contractor shall provide a platform near the truck loading area from which the mix may be observed and from which the samples of the mix may be secured, as well as the temperature of the mix determined. The QC Technician shall see that all trucks are properly covered and the covers securely fastened before leaving the plant to protect the mix from chilling during the haul, caused either by cool weather or rain showers. Cover each load of mixture with a solid, waterproof tarp constructed of canvas, vinyl, or other suitable material. Covers must be of sufficient length and width to cover the entire load.

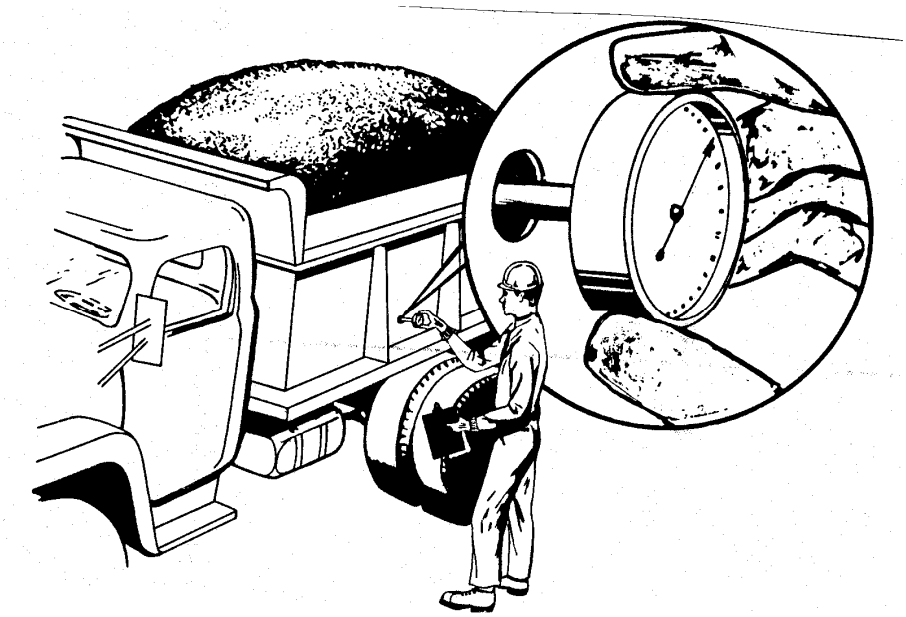

Figure 6-20
Measuring Temperature of Mix in Truck

Truck or Platform Scales must meet requirements of Standard Specifications Article 106-7, "Scales and Public Weighmaster". The platform scales shall be certified according to NC Department of Agriculture regulations. (See Section 5.10 of this manual for details of DOA certification requirements) The Engineer may require occasional loads to be re-weighed on another set of approved platform scales. Different scales at the same site may be used provided they are DOA approved. When reweighing is being done to check scales accuracy, the weights should compare within 0.4%, plus or minus. (See Form QMS-7 in Section 12)

6.10 POLLUTION CONTROL EQUIPMENT

Specifications require that all plants be equipped and operated with the necessary pollution control equipment in order to meet all applicable State, Federal and Local pollution and environmental regulations. The Contractor must make certain that the plant has been properly registered and permitted prior to the plant being certified by the NCDOT. The Plant Certification will indicate the air quality permit number and the date of expiration.

6.11 SAFETY REQUIREMENTS

Adequate safety devices must be provided by the Contractor at all points where accessibility to plant operations is required. Accessibility to the top of truck bodies will be provided by a platform or other suitable device to enable the technician to obtain samples and mixture temperatures. All gears, pulleys, chains, sprockets, and other dangerous moving parts shall be thoroughly guarded and protected. A clear and unobstructed passage must be maintained at all times in and around the truck loading area. All work areas shall be kept free from asphalt binder drippings.

6.12 PRODUCTION CONSISTENCY AND AUTOMATIC EQUIPMENT

The Specifications state that any asphalt plant that cannot consistently produce a uniform mix meeting the requirements of the job mix formula and other applicable specifications will be considered in non-compliance and may have its certification revoked. These requirements include proper gradation, proper asphalt binder content, uniform mix temperature, and operation of all required automatic equipment.

The Specifications for **batch plants** state that **upon a malfunction of the required automatic equipment, the plant may continue to operate manually for the following two (2) consecutive working days.** If the automatic equipment is not repaired within two (2) working days production of all mix must stop until all repairs are made.

The Specifications also state that when a **malfunction of required automatic equipment occurs at a drum-mix plant, manual operation of the plant will not be allowed** except that if in the opinion of the Engineer an emergency traffic condition exists, the plant may be allowed to operate manually until the unsafe traffic condition is corrected. This mix is subject to the same specification requirements as the mix that is produced automatically. No other production from this plant will be allowed until the malfunction is repaired.

It is the intent of these specifications that all automatic equipment properly operate at all times, except in situations where legitimate breakdowns occur. The Contractor must make every effort to repair any breakdowns of automatic controls immediately.

SECTION 7

HOT MIX ASPHALT SAMPLING AND TESTING

7.1 INTRODUCTION - SAMPLING AND TESTING

Sampling and testing of hot-mix asphalt are two of the most important functions performed by QC/QA technicians to assure that a quality product is obtained. Data derived from sampling and testing during production and placement of the mixture are used to control the production process and to determine whether or not the final product meets specification requirements. For these reasons, sampling and testing techniques and procedures must be followed exactly to ensure that results give a true picture of mix quality and characteristics. In addition to performing other responsibilities, a competent QC/QA technician must be able to get representative samples, conduct field tests, interpret the test data, relay the test results to appropriate parties and maintain accurate and adequate records and reports.

Once the job mix formula is issued and before actual construction begins, Mix Verification tests must be performed to determine any differences which may exist between the properties of the asphalt mix designed in the laboratory and the same asphalt mix produced in a batch or drum mix plant. Even though the same material sources are used, quite frequently the plant-produced mix may exhibit different mix properties from that indicated by the mix design. QC testing of the mixture during production is essential to ensure that a satisfactory mix is being obtained. In addition, the Department will perform QA sampling and testing as specified in Section 609-9 of the Standard Specifications.

The JMF based on the mix design produced in the laboratory should be treated only as a “start-up” JMF. As production begins, the desired properties of the mix should be checked and monitored on the plant produced, field lab compacted asphalt mixture. Tests that should be performed during manufacture and placement include: aggregate gradations, cold feed calibrations, asphalt binder content, Superpave volumetric properties, temperature, theoretical maximum density, in-place density, smoothness and visual inspections, and others as necessary. All of the mix properties on the plant-produced mix should be within the ranges required by the JMF and also within the tolerances set by the QMS Specifications. If the test results on the plant-produced mix indicate compliance with the QMS Specifications, the plant may continue to operate. If one or more of the mix properties is outside the desired range, appropriate actions, as described elsewhere in the Manual, shall be taken immediately.

In addition to sampling and testing performed by QC/QA technicians on projects, assessments will be performed by the Materials and Tests Unit’s Independent Assurance (IA) personnel. The Independent Assurance (IA) program assures that the personnel performing QMS testing on all projects remain proficient. If the assessment finds problems with the technician’s proficiency, corrective action will be required and the technician will be reassessed (see the Appendix for details of this Technician Assessment Program). Part of this program also assures that the laboratory equipment used in the testing is properly maintained and calibrated. This is achieved by taking samples (typically a split sample) at either the QC or QA labs and testing those samples at a Materials and Tests Unit facility. The results are compared to a correlation rating system derived from statistical analysis of previous comparative tests. If the results of the comparative samples are within the Excellent/Good range, no investigation is required. If the results are in the Fair/Poor range, an investigation is initiated by IA personnel in an attempt to determine the reason for the disparity. This investigation shall include, but is not limited to: analysis of all calculations performed and

procedures used by the QC/QA personnel, investigation of the testing equipment used, and the personnel performing the IA testing. Analysis of all test results, and if necessary, re-sampling and testing under observation, are other investigation tools available. The IA personnel will normally coordinate their visits with the QC/QA technician in order to prevent unnecessary sampling. The majority of IA samples will be split samples that are taken by the QC/QA technician and witnessed by the IA personnel.

Full cooperation should be given to the IA personnel to insure that their sampling requirements are met. Any questions concerning this IA process for asphalt should be directed to the Asphalt Laboratory at the Materials and Tests Unit, (919) 329-4060.

This Section describes in detail the sampling and testing frequencies, procedures and test methods utilized by NCDOT. As everyone is aware, there is much concern by the Division of Highways, the Federal Highway Administration and Asphalt Industry Representatives about the quality of asphalt pavement construction in North Carolina. Full cooperation and efforts by all parties is necessary in order to assure that pavements are produced and constructed so as to perform as intended. If the Resident Engineer, QMS Technician, Contractor or others should have questions or need further clarification about the guidelines, procedures, or instructions noted in this Manual, please contact the Asphalt Laboratory at any time. All forms and worksheets utilized for Sampling and Testing of mix and aggregates are contained in Section 12 along with detailed instructions.

7.2 QMS CERTIFIED FIELD LABORATORY

For a contract with 5,000 or more total tons (metric tons) of mix, the Contractor shall furnish and maintain a certified laboratory at the plant site. The laboratory shall be furnished with the necessary space for equipment, and supplies for performing contractor quality control testing. A minimum of 320 square feet (30 square meters), exclusive of toilet facilities is required for all QC labs. A 500 square feet (47 square meters) facility is suggested. The Contractor shall provide convenient telephone and fax machine access for QMS personnel at the plant site. There should also be an organizational chart with phone numbers for QC personnel posted in the QC Lab.

For a contract with less than 5,000 total tons (metric tons) of asphalt mix, the Contractor may conduct the quality control testing in a certified off-site laboratory. The Contractor may utilize private testing labs and technicians provided the Department has certified them. The Contractor is still required to have a QMS Level I certified technician at the plant site while producing mix for a NCDOT QMS project.

The laboratory testing equipment shall meet the requirements of the test methods herein and outlined in Section 7.3 of this Manual. Laboratory equipment furnished by the Contractor or his representative shall be properly calibrated and maintained. In the event of a malfunction of laboratory equipment, which cannot be corrected within twenty-four (24) hours, another certified offsite laboratory may be used if approved by the Engineer. The Contractor shall document and maintain calibration results of all equipment at the QC laboratory. See Section 7.2.2 for QMS Lab Equipment Calibration Requirements. The Engineer shall be allowed to inspect measuring and testing devices to confirm both calibration and condition. If at any time the Engineer determines that the equipment is not operating properly or is not within the limits of dimensions or calibration described in the applicable test method, the Engineer may stop production until corrective action is taken.

The Contractor shall notify the Division QA Supervisor as to when the QC lab is ready for inspection and certification. This should be done as much as possible in advance of the paving operation (approx. 10 days) so that the QA Supervisor can complete the QC Lab Certification Checklist and submit it to the Asphalt Design Engineer for approval and certification. Once the field lab is certified, a copy of the checklist

and certification will be forwarded to the Contractor. This certification shall be posted in the field lab at all times. The paving operations shall not begin until the lab is certified.

The Department will maintain a Quality Assurance (QA) Lab in each Highway Division, which will normally be centrally located within the division. This Division QA Lab will be for the purpose of performing all necessary tests in monitoring the Contractor's QC process and for maintaining all documentation of this process. It will be staffed by a Division QA Supervisor and several QA technicians.

7.2.1 QMS Lab Required Equipment List For Superpave Testing

The Asphalt Design Engineer maintains a listing of the required equipment for a QMS Lab. Copies of this list are also furnished to each QA Supervisor anytime updates are made.

REQUIRED EQUIPMENT FOR QMS CERTIFIED LABORATORIES

QUANTITY	DESCRIPTION
1 each	Fax Machine
1 each	Digital Thermometer (0°- 400°F, minimum) wit h Probe
2 each	Asphalt Dial Thermometer (50°- 400°F, minimum) (Optional)
1 each	Thermostatically-Controlled Hot Plate
1 each	Sieve Shaker w/ Timer (able to accommodate both 8" & 12" diameter sieves)
1 each	Mechanical Aggregate Washer (Optional)
1 set	Electronic Balances (12,000 gram minimum capacity with center suspension point)
1 each	Stainless Steel Weighing Cradle
1 set	Electronic Balances (8,000 gram minimum capacity)
1 each	Vacuum Pump or Water Aspirator
1 each	Manometer
1 set	Vacuum Pycnometer & Lid with Two Vacuum Hose Connections or Glass Flasks (Jar) for Rice Gravity
1 each	Mechanical Agitation Device for Rice Sample
1 each	Electric Timer with 15 Minute Capacity or more
1 each	Thermostatic Heater for Water Container
1 each	Temperature Chart Recorder w/ remote probe or digital data logger with temperature display and USB interface for data download
1 each	Immersion Circulation Pump
2 each	Electric Fans, 16" (406 mm) minimum
1 each	Water Trap for Vacuum Pump
1 each	Bleeder Valve for Vacuum Pump Line
1 each	Refrigerator, Apt. Size or Larger
4 each	Metal or Plastic Buckets, 5 gal. (19 L)
1 each	Plastic Water Container w/ Overflow, 24" (610 mm) diameter minimum
1 each	Stainless Steel Bowl, 5 qt. (5.0 L)
1 each	Stainless Steel Bowl, 8 qt. (8.0 L)
1 each	Sampling Shovel with Modified Sides
1 each	Metal Top Splitting Table, 3 ½ ft. x 3 ½ ft. (1.1 m x 1.1 m) minimum

6 each	Metal Mix Sample Pans, 12 ½" x 10 ½" (315 mm x 265 mm) minimum
1 each	Frying Pan or Electric Skillet
1 each	Shop Vac with HEPA Filter
1 set	Calibration Weights
1 each	Masonry Trowel, Straight Sided
1 set	Spatulas (1 @ 4" & 1 @ 6")
1 each	Flat Bottom Sampling Scoop
1 each	Metal Quartering Template – w/ sides of sufficient height that form a 90º angle (Optional)
2 each	Large Spoons, 8" min. length
1 pair	Rubber Gloves
2 pair	Welder's Gloves
2 each	Assortment of Brushes for cleaning sieves
- - -	Clean Rags
- - -	Wetting Agent (any dispersing agent such as liquid dish washing detergent, or soap which will promote the separation of fine material.)
- - -	Permanent Paint Marking Pens
- - -	Large Cloth Sample Bags (Good Condition)
- - -	Lab Oven(s) minimum 10.0 CF capacity. Must be <u>forced air convection & operable</u>.
1 each	Approved Ignition Furnace (meeting the requirements of AASHTO T 308.)
1 each	NCDOT Approved 150mm Gyratory Compactor w/Printer & Automatic Shutoff
1 each	150 mm Gyratory Specimen Extractor (unless built into the compactor)
3 each	150 mm Gyratory Specimen Molds (See section 7.2.2 (A-8))
4 each	12" x 15" (305 mm x 380 mm) Metal Mix Sample Pans
1 each	Metric Ruler

1 set 12 inch Diameter Sieves (with cover & pan)

1	50.0 mm	1	19.0 mm	1	4.75 mm	1	0.600 mm	2*	0.075 mm
1	37.5mm	1	12.5 mm	1	2.36 mm	1	0.300 mm		
1	25.0 mm	1	9.50 mm	2*	1.18 mm	1	0.150 mm		

*Additional sieves required for washed gradation (1.18 mm & 0.075 mm nest) may be 8" diameter.

<u>The following will be required for TSR testing at each Lab used for Mix Designs:</u>

1 each	Loading Jack or Test Press with Calibration Spring (capable of printing hardcopy graphs such as a chart recorder or downloadable to a computer for printout)
1 each	150 mm TSR Breaking Head
1 each	Hot Water Bath with Agitator
1 each	Infrared Thermometer (0°- 400°F, minimum)

7.2.2 <u>QMS Lab Equipment Calibration Requirements</u>

Laboratory equipment furnished by the Contractor or his representative shall be properly calibrated and maintained as specified below. QC process control may require additional equipment verifications to ensure accurate test results.

The Contractor shall document and maintain all QC records, forms and calibrations for a minimum of 3 years after completion. It is recommended that all records be kept in one (1) binder. This binder shall be readily available for review by the Department or its representative. Periodically, each lab may be audited by the Department or its representative. The audit will consist of a review of calibration records and random verifications of equipment for compliance. In the event a plant does no NCDOT work for an extended period of time and these checks are not performed, this period of inactivity should be documented in the QC diary.

Test methods and forms listed *(Italics)* are available through the NCDOT Materials and Tests Unit in Raleigh at (919) 329-4060. If the M&T Forms listed are not utilized, then the replacement form must include the identical information listed on the referenced M&T Forms and be labeled clearly for each piece of equipment verified/calibrated.

The gyratory compactor and ignition furnace time and date stamp shall be checked daily to ensure accurate information is displayed on the printout. The time and date shall be accurate and consistent with the time and date displayed within 5-10 minutes of the time printed on the certified weight certificate (load tickets).

A. Gyratory Compactors and Molds

1. Calibration on the compactor will be required every 12 months and must be performed by the manufacturer or a certified representative (certified by manufacturer). This calibration must include internal angle verification. Paperwork (or certification sticker affixed to device) shall be provided showing the following information:
   - Date of calibration/verification and maintenance
   - Value for internal angle
   - Type of internal angle device used
   - Individual Mold Diameter Measurements
   - Personnel who performed calibration/verification
   - Any repair work performed
2. Internal Angle will be calibrated every 12 months as per AASHTO TP 71 ($1.16 \pm 0.02^{\circ}$)
3. Pressure will be calibrated every 12 months, as per manufacturer specifications (600 ± 18 kPa)
4. Frequency of gyration will be verified every 12 months (30.0 ± 0.5 gyrations per minute)
5. Height will be verified daily, as used ($\pm$ 0.1 mm of plug height)
6. The above calibrations/verifications for each calendar year will be printed (if applicable) and kept in a folder/binder that will be labeled “Gyratory Compactor Verifications”.
7. The above calibrations/verifications shall be performed within 10 calendar days of moving the compactor from one laboratory to another. The compactor must also be recalibrated after any repairs or replacement of parts.
8. Gyratory Molds will be uniquely identified* and the diameter measured every 12 months by the manufacturer or a certified representative, using a three-point internal bore gauge in accordance AASHTO T312-11, Annex A1. The average inside diameter of new molds shall be 149.90 mm to 150.00 mm (measured at room temperature). If any mold in service exceeds 150.20 mm, it shall be taken out of service and replaced.

9. Mold measurement information shall be stored in a binder or folder.

* Uniquely identified molds refer to individual molds that are permanently etched and can be matched with calibration paperwork and tracked over time.

B. Balances and Water Tanks

1. Balances - general purpose balances shall be calibrated annually using NIST Class F traceable weights by a registered scale technician through the North Carolina Department of Agriculture and Consumer Services Standards Division. These balances shall be verified weekly by QC/QA lab personnel following the procedures in *Test Method MT-3V* and recorded on *Form 3V* or equivalent.
2. Balances must meet requirements of AASHTO M 231, Table 2. When calibrated annually, each balance shall have a certification/sticker that provides:
   a. Date of calibration.
   b. Scale technician who performed calibration.
3. If the balances are being used for bulk specific gravity or maximum gravity methods and utilize a suspended cable, the steel cable or wire shall be of the smallest practical size to minimize any possible effects of variable immersed length. Also, the opening in the table or stand shall allow the cable free movement with no restrictions. Linked chain of any kind will not be allowed.
4. The water tanks shall be made of a non-corroding material and have provisions for automatic control of the water temperature as well as a circulation pump.
5. Each tank shall be equipped with a recording thermometer with its bulb located in the water. (Recording charts should be replaced monthly (or at the appropriate recording interval).
6. These water tanks shall be maintained at 77 ± 2℉ (25 ± 1℃).
7. The tanks shall be deep enough to completely submerse the specimen and holder and be equipped with an overflow outlet for maintaining a constant water level. The water tanks shall be visually inspected weekly and water replaced at least once per month (or more often as needed).
8. Water tanks and suspension apparatus must meet the requirements of AASHTO T 166, Section 4.

C. Ovens and Water Baths

1. Asphalt mix ovens - shall be a forced draft oven, thermostatically controlled, capable of maintaining any desired temperature setting from room temperature to at least 350℉ (176℃).
2. Ovens shall be in proper working order with doors that seal properly with no broken hinges.
3. Ovens will be verified every six months using a NIST traceable thermocouple thermometer and following the procedures *of Test Method MT-2V* and recorded on *Form 2V* or equivalent. If the temperature readout does not match the NIST thermocouple, it shall be adjusted so the temperature readout is correct.
4. A record shall be kept of all annual verifications as well as any repairs made to the ovens and shall include the following:
   a. Date of last verification
   b. Temperature at which oven was verified
   c. Personnel who performed verification
5. Water baths shall be thermostatically controlled and will be verified every six months using an NIST traceable thermocouple thermometer and following the procedures *of Test Method MT-2V* and recorded on *Form 2V* or equivalent. If the temperature readout does not match the NIST thermocouple, it shall be adjusted so the temperature readout is correct.

D. Ignition Furnace

1. Forced air ignition furnaces shall be capable of maintaining the temperature at 1072℉ (578℃). The fu rnace shall have an internal balance capable of weighing a 3500 gram sample in addition to the baskets. Ovens shall be in good working condition. All safeguards shall be in place and shall function properly.
2. The internal oven balance shall be calibrated annually by a registered scale technician through the North Carolina Department of Agriculture and Consumer Services Standards Division using NIST Class F weights following *Test Method MT-35V* and the results recorded on *Form 35V* or equivalent. (8000 gram weight required)
3. Each ignition furnace shall have a lift test performed monthly when the furnace is at room temperature, following the procedures of *Test Method 35V(A).* These results shall be recorded on *Form 35V(A)* or equivalent.

E. Various other lab equipment

1. Shakers and Sieves
   a. Shakers shall be visually inspected weekly and maintained.
   b. Sieves shall be visually inspected weekly following *Test Method MT-11V* and documented on *Form 11V* or equivalent.
   c. Any sieve that is damaged or broken shall be immediately replaced with a new sieve.
2. Vacuum Pump and System
   a. Vacuum pumps used for maximum gravity testing shall conform to the standards of AASHTO T 209, Section 6.
   b. The vacuum system shall include a vacuum gauge, a water vapor trap, hoses, a vacuum pump, and a manometer (absolute pressure gauge).
   c. The vacuum within the pycnometer shall be verified quarterly with an absolute vacuum gauge and the manometer should be adjusted accordingly. The system shall be verified following the procedures of *Test Method 28V* and documented on *Form 28V* or equivalent. Additionally, this verification shall be conducted anytime maintenance or adjustments are performed.
3. Compression Testing Machine
   a. The test press shall be capable of loading at a speed of 2 inches/minute (50 mm/min).
   b. The test press shall be verified using the manufacturer's recommended method which usually involves using a proving spring or a proving load ring.
   c. The test press shall be verified every 12 months and the verification data shall be stored and be available for review.

Items listed above shall adhere to the requirements of this Manual and Department policies. Failure to comply with these requirements may result in lab certification being suspended until all testing equipment meets calibration requirements.

In the event of an equipment malfunction that cannot be corrected within 24 hours, the laboratory must provide documentation from the service company detailing the repairs and/or parts needed. Also, provide documentation from the service company outlining the timeframe for when the service/repair can be completed. Fax [(919) 329-4242] or email documentation to the Asphalt Design Engineer.

NORTH CAROLINA DEPARTMENT of TRANSPORTATION

HMA/QMS

CERTIFIED SUPERPAVE LABORATORY

This is to certify that
the Asphalt Testing Laboratory located at

Quality Paving Co., Inc.

Everywhere, N.C.

meets all requirements of the
North Carolina Department of Transportation's
Superpave and Quality Management System specifications

SP-000-00-00

Certification No.

Todd W. Whittington, PE
State Asphalt Design Engineer

QMS Plant Sampling Schedule

Plant Mix

Material	Point at which Sample is taken:	Minimum Sample Size:	Sampled by:	Frequency of Test:	Test:	Test Performed By:
ASPHALT MIXTURE: FULL TEST SERIES	From truck at plant site (Section 7.5 QMS Manual)	200 lbs. (91kg) Split and quartered as per the HMA\QMS Manual.	QC & QA Personnel	One per each 750 tons of Accumulated Mix Produced (per M.D.per plant per year)	Binder Content (AASHTO T 308 Modified) Bulk Specific Gravity (AASHTO T 312 & T 166) (ASTM D6752) G_{mm} (AASHTO T 209) (ASTM D2041) (ASTM D6857) Recovered Blended Aggregate Gradation (AASHTO T 30 Mod.)	QC & QA Personnel
ASPHALT MIXTURE: PARTIAL TEST SERIES	From truck at plant site (Section 7.5 QMS Manual)	100 lbs.(45kg) Split and quartered as per the HMA\QMS	QC Personnel	One per day when more than 100 tons is produced and a Full Test Series does not occur	Binder Content (AASHTO T 308 Mod.) Recovered Blended Aggregate Gradation (AASHTO T 30 Mod.) G_{mm} required for Maintenance Version (AASHTO T 209) (ASTM D2041) (ASTM D6857)	QC & QA Personnel
AGGREGATE STOCKPILE GRADATION (1)	Stockpile or Cold Feed Belt at Plant Site	Fine Agg. 10 lbs (5kg) (No Split Req'd.)	QC & QA Personnel	- Mix Verification (within one week prior) - Weekly (2) - Plant Mix Problems	Gradation in accordance with AASHTO T 11 & T 27	QC & QA Personnel
		Coarse Agg. 25 lbs (11kg) (No Split Req'd.)	QC & QA Personnel	- Beginning Production (2) - Weekly (2)		
RAP and/or RAS MATERIAL	Stockpile or Cold Feed Belt at Plant Site	25 lbs. (11kg) Split and quartered into sample size	QC & QA Personnel	Beginning of Production and Weekly thereafter	Binder Content and Gradation in accordance with AASHTO T 308 Modified & T 30 Modified	QC & QA Personnel
RETAINED TENSILE STRENGTH TEST(TSR) (3)	From Truck at Plant Site	200 lbs. (91kg) split and quartered into sample size per the HMA\QMS Manual.	QC & QA Personnel	Provide test results within 7 calendar days after beginning production, when change in anti-strip source, dosage, or as deemed necessary by Engineer. **[for WMA, see Section 7.14.1 (D)]**	Tensile Strength Ratio in accordance with AASHTO T 283 Mod.	QC & QA Personnel
COMBINED AGGREGATE MOISTURE CONTENT	Stockpile or stopped conveyor belt or discharge chute.	Sample size in accordance with AASHTO T 255 (No Split Req'd.)	QC Personnel	Minimum of once daily at Drum Mix Plant	Moisture Content in accordance with AASHTO T 255	QC Personnel

(1) Note: QA Sample will be a Verification sample.

(2) Note: In lieu of aggregate stockpile gradations, the Contractor may furnish gradation quality control test data conducted by the aggregate producer, which is representative of the Contractor's current stockpiles.

(3) Note: TSR not required for HMA Mix Verification but acceptable to be done at that time.

7.3 QUALITY CONTROL (QC) MINIMUM SAMPLING AND TESTING SCHEDULE

Sampling and testing are methods of evaluating and documenting the quality of the product. The QC/QA Technician must know what frequency of sampling and testing is required for both Plant and Roadway Operations, the manner and location in which samples are to be taken, and the number of samples required for a given day's production. It is the QC Technician's responsibility to ensure that representative samples are obtained in accordance with the specific contract guidelines. He / She must also ensure that samples are properly identified with the time, date and location. The QC/QA Technician shall know the procedures for tests he/she must conduct and should follow those procedures to ensure accurate results. If laboratory testing of samples is required, the QC/QA Technician should follow-up to ensure that tests are made as scheduled and that results are promptly evaluated.

The Contractor shall maintain minimum test frequencies as established below. All tests shall be completed within 24 hours of the time the sample was taken. If not completed within this time frame, all hot mix asphalt production shall cease until the tests are completed. An essential element of quality control is the ability to react and make changes if asphalt mix deficiencies occur. Therefore, it is intended for all tests to be performed directly after being sampled to allow the producer to react to the test results.

Mix control criteria are the 2.36 mm and 0.075 mm sieves, % Binder Content (P_b), Voids in Total Mix (VTM), Dust/Binder Ratio ($P_{0.075}/P_{be}$), Voids in Mineral Aggregate (VMA), $\%G_{mm}$ @ N_{ini}, and TSR.

The Contractor shall sample and perform a full test series on the completed mixture ***from each mix design per plant per year*** **(mix used on NCDOT projects)** at the following minimum frequency during mix production.

Accumulative Production Increment	Number of Samples per Increment
750 tons (750 Metric Tons)	1

If production is discontinued or interrupted before the accumulative production increment tonnage is completed, continue the increment on the next production day(s) until the increment tonnage is completed. Obtain the random sample within the specified increment at the location determined in accordance with the most current edition of the Department's HMA/QMS Manual. When daily production of each mix design exceeds 100 tons (100 metric tons) and a regularly scheduled random sample location for that mix design does not occur during that day's production, perform at least one partial test series as outlined in the schedule below. These partial test series and associated tests do not substitute for the regularly scheduled random sample for that increment.

If the contractor's frequency fails to meet the minimum frequency requirements as specified, all mix without the specified test representation will be unsatisfactory. The Engineer will evaluate if the mix may remain in place with accordance with Article 105-3.

Any additional contractor samples taken and tested at times other than the regularly scheduled random samples or directed samples which do not take the place of regularly scheduled samples will be considered Process Control (PC) samples and shall be designated accordingly on the appropriate forms. Process Control test results will not be plotted on control charts nor reported to the Quality Assurance Laboratory.

During production of mix used on NCDOT projects the Contractor shall conduct quality control sampling and testing on the asphalt mixture consisting of:

I. Full Test Series

Asphalt Mixture - 200 lbs. (91 kg) Sampled From Truck at Plant (Section 7.5)
(Split Sample Required. Must be retained for 5 calendar days)

A. Binder Content, % Ignition Furnace (AASHTO T 308 Modified)
Note: Contractor may request and use other means (namely AASHTO T 164) of determining percent asphalt binder, subject to approval by the Engineer.
B. Gradation on Recovered Blended Aggregate from Mix Sample (AASHTO T 30 Modified) Gradation required on all of the sieves specified on JMF.
C. Maximum Specific Gravity (AASHTO T 209 Modified, ASTM D 2041 Modified, or ASTM D 6857).
D. Bulk Specific Gravity of Compacted Specimens (AASHTO T 166), optional (AASHTO T 331), average of 3 specimens at N_{des} gyrations (AASHTO T 312 Modified)
(Specimens must be retained for 5 calendar days)
E. Air Voids (VTM), average of 3 specimens at N_{des} gyrations (AASHTO T 269)
F. Voids in Mineral Aggregate (VMA) (calculation)
G. Voids Filled with Asphalt (VFA) (calculation)
H. $P_{0.075}/P_{be}$ Ratio
I. % Maximum Specific Gravity at N_{ini} (calculation)

II. Partial Test Series

Asphalt Mixture –100 lbs. (45 kg) Sampled from the truck at plant (Section 7.5)
(Split Sample Required. Must be retained for 5 calendar days)

A. Binder Content, % Ignition Furnace (AASHTO T 308 Modified)
Note: Contractor may request and use other means (namely AASHTO T 164) of determining percent asphalt binder, subject to approval by the Engineer.
B. Gradation on Recovered Blended Aggregate from Mix Sample (AASHTO T 30 Modified) Gradation required on all of the sieves specified on JMF.
C. G_{mm} is required for a partial test series in accordance with Maintenance Version.

III. In addition to the above schedule, conduct the following sampling and testing as indicated:

A. Aggregate Stockpile Gradations (AASHTO T 27 and T 11 Modified)
(sampled from stockpiles or cold feed system as follows; split samples not required)
1. Coarse Aggregates (Approved Standard Sizes)
   a. At beginning of production *
   b. Weekly thereafter *
2. Fine Aggregates (Stone Screenings, Natural Sands, etc.)
   a. At or within 1 week prior to mix verification
      (Gradations Valid for Multiple Mix Designs),
   b. Anytime production is stopped due to plant mix gradation related problems,
   c. Weekly after mix verification*

*In lieu of the aggregate stockpile gradations performed by QC, gradation quality control data conducted by the aggregate producer, which is representative of the Contractor's current stockpiles, may be furnished.

B. Reclaimed Asphalt Pavement (RAP) Binder Content and Washed Gradation (AASHTO T 30 & T 308 Modified). Sampled from stockpiles or cold feed system at beginning of production & weekly thereafter. (If RAP mixes are being produced) Have RAP approved for use in accordance with Article 1012-1(G) and Table 1012-2 of the Standard Specifications. (Split Sample Required. Must be retained for 5 calendar days)

C. Reclaimed Asphalt Shingle Material (RAS) Binder Content and gradation (AASHTO T 308 Modified and AASHTO T 30 Modified) Sampled from stockpiles or cold feed system at beginning of production & weekly thereafter. (If RAP mixes are being produced) Have RAS approved for use in accordance with Article 1012-1(F) of the Standard Specifications. (Split Sample Required. Must be retained for 5 calendar days.)

D. Combined Aggregate Moisture Content (AASHTO T 255) Drum Plant Only (sampled from stockpiles or cold feed system a minimum of once daily).

E. Tensile Strength Ratio (TSR) - (AASHTO T 283 Modified). Additional TSR testing is required when a change is made in anti-strip additive dosage or when a new anti-strip additive source or grade is utilized, unless otherwise approved. Other TSR test(s) may be directed as deemed necessary. TSR testing is not required for mix verification, but may be performed at that time.
FOR WMA: See Section 7.14.1 (D) of QMS Manual.

F. Draindown Test for Uncompacted Asphalt Mixtures (AASHTO T 305 Modified)

7.3.1 Sample Location for Mix

Prior to beginning production each day, the Contractor shall specify the projected tonnage of each mix type to be produced from a plant and furnish this information to the appropriate QA Lab on the QC-9 form, along with the random sample locations for that day's production. (See Section 12 of this manual for detailed instructions for this form.) This tonnage is not project specific but plant specific.

The approximate location of each sample within the increments shall be determined by selecting random numbers from Table 7-1 in accordance with the procedures detailed in ASTM D 3665 Alternative 2 as modified by the Department. **This is the only acceptable means of determining random numbers for plant mix test locations**. The random numbers selected shall then be multiplied by the 750 tonnage increment. This number shall then be added to the final tonnage of the previous increment to yield the approximate total tonnage when the sample is to be taken. A copy of the certified weight certificate from the load the sample was obtained shall be attached to the QA/QC-1 form.

Sample tonnage(s) shall be computed to the nearest whole ton (metric ton). This process shall be recorded on the QC-9 form prior to beginning production of each increment, with the original maintained at the QC Lab for inspection by the QA personnel. This form should also be faxed to the appropriate QA Supervisor prior to production each day or at the beginning of producing a different mix during the day. Instructions for completing the QC-9 form can be found in Section 12 of this Manual. In the event of production over a weekend or holiday, the Contractor shall contact the QA Supervisor via a telephone call, text, etc. so that he can make any needed arrangements for obtaining possible verification samples during this time.

All regularly scheduled random samples shall be taken at the sample tonnage as determined above. The random sample locations shall not be made known to the plant operator in order to maintain the integrity of the random sampling process. As an exception to these regularly scheduled random samples, a mix sample shall be taken and a full test series performed on mix incorporated into a control strip when proceeding on limited production procedures due to failing densities. When a mix sample is obtained in

conjunction with a control strip, that sample will not substitute for the next randomly scheduled QC mix sample for that tonnage increment, nor shall it be plotted on the control charts. However, all applicable plant mix tests results shall be reported to QA. The maximum specific gravity (G_{mm}) used to calculate percent compaction for the control strip placed shall be the individual G_{mm} for the sample of mix taken from the mix incorporated into the control strip (See Section 10.9).

NCDOT Random Numbers Table (ASTM-3665 Modified)
To Be Used For The QC-9 Form

ASTM D-3665, Alternative 2, will be the only acceptable method used to produce random numbers for the QC-9 Form with the following stipulations. The starting point will always be the upper left corner of the random number table and the progression will be down the numbers in that column. Once all one hundred numbers in a column have been used, the progression will be to the top of the next column and the process repeated. As random numbers are used from the table, each used random number shall be lined through (not obliterated) to show that they have been used. In addition, the mix type should be noted beside the random number used.

When utilizing this table the following additional rules will also apply. The same random numbers table will be used for all mix designs per plant per calendar year. If all randoms numbers in TABLE 7-1 are used prior to the end of the calendar year, this process will begin anew and continue thru the end of that same calendar year.

Table 7-1

	Mix Type	0	Mix Type	1	Mix Type	2	Mix Type	3	Mix Type	4	Mix Type	5
1		0.245		0.370		0.737		0.739		0.857		0.955
2		0.539		0.588		0.070		0.320		0.561		0.390
3		0.623		0.780		0.375		0.827		0.605		0.819
4		0.370		0.400		0.435		0.576		0.161		0.074
5		0.732		0.606		0.876		0.840		0.909		0.015
6		0.876		0.317		0.122		0.471		0.081		0.761
7		0.359		0.207		0.957		0.929		0.017		0.494
8		0.810		0.516		0.344		0.423		0.576		0.514
9		0.887		0.255		0.720		0.199		0.639		0.629
10		0.256		0.220		0.381		0.983		0.261		0.062
11		0.165		0.169		0.075		0.800		0.805		0.245
12		0.313		0.856		0.771		0.619		0.085		0.436
13		0.172		0.356		0.174		0.527		0.403		0.928
14		0.233		0.316		0.838		0.704		0.207		0.496
15		0.135		0.834		0.899		0.284		0.388		0.654
16		0.743		0.738		0.355		0.165		0.422		0.028
17		0.702		0.029		0.671		0.952		0.094		0.382
18		0.858		0.967		0.104		0.545		0.223		0.603
19		0.134		0.406		0.888		0.567		0.003		0.753
20		0.385		0.074		0.222		0.640		0.312		0.424
21		0.225		0.790		0.449		0.214		0.508		0.241
22		0.108		0.416		0.488		0.829		0.351		0.035
23		0.684		0.137		0.402		0.542		0.680		0.127
24		0.098		0.245		0.686		0.328		0.191		0.745
25		0.783		0.805		0.990		0.825		0.184		0.785
26		0.436		0.945		0.854		0.533		0.091		0.698
27		0.916		0.385		0.240		0.521		0.358		0.130
28		0.432		0.727		0.459		0.629		0.655		0.972
29		0.555		0.753		0.194		0.365		0.539		0.063
30		0.645		0.576		0.685		0.867		0.519		0.950
31		0.553		0.547		0.459		0.413		0.352		0.975
32		0.738		0.016		0.524		0.178		0.943		0.246
33		0.166		0.544		0.837		0.343		0.029		0.846
34		0.563		0.691		0.495		0.777		0.357		0.096
35		0.685		0.789		0.396		0.840		0.075		0.090
36		0.095		0.496		0.030		0.138		0.108		0.843
37		0.136		0.455		0.073		0.343		0.726		0.068
38		0.118		0.208		0.730		0.909		0.353		0.300
39		0.074		0.598		0.703		0.647		0.869		0.673
40		0.267		0.883		0.813		0.020		0.363		0.089
41		0.906		0.795		0.359		0.118		0.013		0.847
42		0.161		0.797		0.615		0.418		0.327		0.191
43		0.686		0.371		0.410		0.021		0.047		0.731
44		0.238		0.255		0.975		0.269		0.460		0.848
45		0.982		0.703		0.133		0.369		0.674		0.847
46		0.214		0.963		0.988		0.363		0.716		0.513
47		0.543		0.678		0.637		0.679		0.084		0.741
48		0.346		0.801		0.367		0.693		0.052		0.502
49		0.527		0.703		0.879		0.661		0.105		0.863
50		0.427		0.378		0.005		0.632		0.881		0.036

Table 7-1 (continued)

	Mix Type	0	Mix Type	1	Mix Type	2	Mix Type	3	Mix Type	4	Mix Type	5
51		0.472		0.453		0.541		0.255		0.833		0.485
52		0.128		0.887		0.257		0.966		0.254		0.842
53		0.799		0.689		0.335		0.184		0.341		0.816
54		0.191		0.488		0.189		0.033		0.013		0.962
55		0.952		0.795		0.066		0.990		0.134		0.904
56		0.609		0.613		0.961		0.676		0.029		0.011
57		0.491		0.236		0.530		0.339		0.833		0.815
58		0.739		0.163		0.149		0.894		0.784		0.881
59		0.732		0.702		0.833		0.795		0.327		0.523
60		0.976		0.044		0.715		0.097		0.185		0.308
61		0.782		0.147		0.917		0.789		0.750		0.361
62		0.317		0.267		0.539		0.586		0.090		0.432
63		0.170		0.905		0.653		0.358		0.526		0.579
64		0.902		0.269		0.931		0.871		0.617		0.430
65		0.661		0.414		0.294		0.243		0.943		0.864
66		0.845		0.318		0.222		0.297		1.000		0.045
67		0.256		0.807		0.126		0.077		0.034		0.058
68		0.960		0.114		0.130		0.953		0.259		0.132
69		0.199		0.381		0.210		0.278		0.336		0.280
70		0.941		0.461		0.218		0.609		0.534		0.552
71		0.628		0.674		0.261		0.227		0.694		0.126
72		0.633		0.045		0.932		0.845		0.436		0.574
73		0.309		0.572		0.983		0.943		0.472		0.792
74		0.162		0.378		0.920		0.275		0.157		0.318
75		0.346		0.399		0.650		0.848		0.259		0.296
76		0.406		0.337		0.873		0.293		0.435		0.003
77		0.312		0.559		0.384		0.758		0.044		0.734
78		0.577		0.438		0.646		0.486		0.651		0.203
79		0.354		0.088		0.068		0.737		0.777		0.217
80		0.138		0.613		0.061		0.064		0.140		0.345
81		0.169		0.160		0.977		0.164		0.727		0.957
82		0.226		0.135		0.120		0.074		0.845		0.026
83		0.088		0.810		0.344		0.959		0.607		0.603
84		0.027		0.110		0.503		0.278		0.468		0.973
85		0.205		0.089		0.367		0.932		0.084		0.234
86		0.651		0.999		0.894		0.563		0.780		0.426
87		0.778		0.231		0.964		0.191		0.532		0.302
88		0.820		0.562		0.919		0.186		0.949		0.022
89		0.242		0.056		0.829		0.299		0.734		0.491
90		0.194		0.647		0.611		0.550		0.808		0.529
91		0.878		0.569		0.219		0.879		0.270		0.813
92		0.863		0.599		0.796		0.024		0.577		0.974
93		0.864		0.230		0.809		0.027		0.226		0.189
94		0.281		0.857		0.718		0.035		0.728		0.866
95		0.741		0.780		0.788		0.124		0.469		0.861
96		0.635		0.687		0.215		0.684		0.719		0.444
97		0.313		0.535		0.856		0.953		0.719		0.571
98		0.642		0.074		0.825		0.533		0.664		0.812
99		0.207		0.361		0.918		0.725		0.127		0.817
100		0.686		0.448		0.505		0.526		0.883		0.676

QC 9 Revised

12/1/2004

North Carolina Department of Transportation

QC Random Sample Worksheet

Contractor Quality Paving Co., Inc. Plant Location Everywhere, NC Mix Type I 19.0 B Mix Design No. 10-248

Today's Date	Projected Tonnage	Sample Number	Random Number (A)	Increment Tons (B)	C = A x B (C)	Previous Increment Tons (D)	Sample Tonnage E = D + C (E)	End of Last Day's Tonnage (F)	Tons to Today's 1st Sample * G = E - F (G)	Date Sample Taken (H)	Accum. Tonnage @ End of Today (I)	**QC Technician signature
11/8/2007	300	10-1	0.245	750	184	0	184	0	184	11/8	375	
11/9/2007	2200	10-2	0.539	750	404	750	1154	375	779	11/9	-----	
11/9/2007	2200	10-3	0.623	750	467	1500	1967	-----	-----	"	2025	
11/12/2007	900	10-4p1	0.370	750	278	2250	2528	2025	503	11/12	2175	
11/13/2007	300	10-4p2	0.370	750	278	2250	2528	2175	353	11/13	2300	
11/16/2007	600	10-4	0.370	750	278	2250	2528	2300	228	11/16	-----	
11/16/2007	600	10-5	0.732	750	549	3000	3549	"			2950	
								2950				

* If the next regularly scheduled sample tonnage for an increment is not reached, this will be the tonnage remaining from the end of the last day's tonnage to the first sample tonnage the next production day.

NOTE: This form to be completed and faxed to appropriate QA Supervisor prior to production of each mix design each day. Original maintained at QC Lab.

** By providing this data under my signature and/or HICAMS certification number, I attest to the accuracy and validity of the data contained on this form and certify that no deliberate misrepresentation of test results, in any manner, has occurred.

7.3.2 Sample Location for Aggregates, RAP, & RAS

Subarticle 609-6(B) of the Standard Specifications requires aggregate samples be taken from either the stockpiles or the cold feed system and washed gradations be performed at the frequencies specified below:

A. Coarse Aggregates (approved standard sizes) *Split samples not required*
   1. At beginning of production
   2. Weekly thereafter
B. Fine Aggregates (stone screenings, natural sands, etc.) *Split samples not required*
   1. At or within 1 week prior to mix verification (Gradations Valid for Multiple Mix Designs),
   2. Anytime production is stopped due to plant mix gradation related problems,
   3. Weekly after mix verification
C. Reclaimed Asphalt Pavement (RAP) and Reclaimed Asphalt Shingles (RAS)
   Split samples required
   1. At beginning of production
   2. Weekly thereafter

In lieu of the beginning of production gradations on coarse aggregates and the weekly required gradations on both coarse and fine aggregates, the Contractor may furnish gradation quality control data conducted by the aggregate producer, which is representative of the Contractor's current stockpiles.

The weekly requirement for aggregate, RAP and RAS is defined as a calendar week unless there has been no production during that calendar week.

The Contractor must maintain records of all aggregate, RAP, and RAS stockpile gradations and furnish these upon request to QA personnel. Maintain at the plant site a record system for all approved RAP stockpiles. Include at a minimum the following: Stockpile identification and a sketch of all stockpile areas at the plant site; all RAP test results (including asphalt content, gradation, and asphalt binder characteristics). All mix samples taken must be reported on the QC-1 Form by the beginning of the next work day after the sample(s) is taken, not to exceed 1 calendar day.

7.4 MIX VERIFICATION, JMF ADJUSTMENTS, AND CORRECTIVE ACTION PROCEDURES

All forms referred to in this Section have detailed instructions in Section 12 of this Manual.

7.4.1 Mix Verification Requirements

The Contractor shall conduct field verification of the mix at each plant within 45 calendar days prior to initial production of each mix design, when required by the Allowable Mix Adjustment policy and when directed as deemed necessary. Prior to beginning mix verification, the Contractor shall ensure that all preliminary inspections and plant calibrations are either current or performed as indicated on the QC-11 form. The contractor must repeat the mix verification if the initial QC full-test series does not occur within 45 days of the initial verification. Mix obtained from NCDOT or non-NCDOT work may be used for verification purposes provided it is sampled, tested, and the test data handled in accordance with current procedures in this manual and the following provisions. If non-NCDOT mix is used, the appropriate QA Lab should be notified prior to performing the sampling and testing.

Mix verification tests for Hot Mix Asphalt (HMA) will consist of those required on the QC-11 form which includes recovered aggregate gradation, binder content, dust-to-binder ratio, Maximum Specific Gravity (G_{mm}), Gyratory Bulk Specific Gravity (G_{mb}@N_{des}), Gyratory printouts for N_{des} gyrations, VTM, VMA, VFA, %G_{mm}@N_{ini} calculations, cold feed blend calibration and moisture content (if required). Other preliminary inspections, calibrations, aggregate stockpile washed gradations, RAP and RAS binder content and gradations (if applicable), are required to be current and on file at the Contractor's QC Lab. Satisfactory verification shall be when all volumetric properties meet the applicable mix design criteria except the gradation, binder content and %G_{mm}@N_{ini} are within the individual test limits for the mix type being produced.

Verification is considered satisfactory for Warm Mix Asphalt (WMA) when all volumetric properties except %G_{mm}@N_{ini} are within the applicable mix design criteria, the TSR is equal to or above the minimum design criteria, and the gradation, binder content, and %G_{mm}@N_{ini} are within the individual limits for the mix type being produced.

A 200 pound (91 kg) sample of mix shall be taken for mix verification testing. This 200 pound (91 kg) shall be quartered, bagged, tagged, and the QA and referee portions retained until either procured by or disposal permission is given by QA personnel. Plant production shall not begin until all QC field verification test results have been completed and the mix has been satisfactorily verified by the Contractor's Level II technician. In addition, QC shall retain records of these calibrations and mix verification tests and furnish copies (as required on the QC-11 form) to the Engineer for review and approval within one working day after beginning production of that mix. Failure by the Contractor to fully comply with the above mix verification requirements shall result in immediate production stoppage by the Engineer. Production of that mix shall not resume until all mix verification sampling and testing, calibrations, and plant inspections have been performed and approved by the Engineer. Any mix produced that is not verified may be assessed a price reduction at the discretion of the Engineer in addition to any reduction in pay due to mix or density deficiencies.

The initial mix verification of all new mix designs shall be conducted with the plant set up to produce the aggregate blend and binder content in accordance with the initial JMF, unless otherwise approved by the Engineer. If QC test results indicate that adjustments to the aggregate blend and/or binder content are necessary to obtain the desired volumetric properties, QC adjustments as deemed necessary may be made prior to any mix production to the project. After these adjustments are made, all related test results and data substantiating the change must be furnished to the appropriate QA Supervisor, including the gyratory

specimen printouts and the 0.45 power chart with the original and proposed blend gradations plotted if any blend / gradation change is being requested. The QA supervisor will furnish this data to the Asphalt Design Engineer for approval, prior to production of that mix. In addition, all test results and data for the initial mix verification (with the plant set up to produce the initial aggregate blend and binder content) shall also be furnished at that time.

If the Contractor and/or the Division QA Supervisor determine from results of quality control tests conducted during verification that adjustments to the JMF are necessary to achieve the specified mix properties, adjustments to the JMF may be made within the tolerances permitted by the specifications for the particular mix type being produced. All Contractor requested JMF adjustments must be approved by the Asphalt Design Engineer and documented in writing before the new mix is produced for a NCDOT project. If these mix adjustments achieve the desired mix properties, the Asphalt Design Engineer will be contacted by the Division QA Supervisor for this approval and issuance of a revised JMF.

The Contractor shall maintain records of all mix verification tests, calibrations and plant checks. Failure to have results available may require additional mix verification tests prior to production of a mix.

7.4.2 Allowable Mix Adjustments

Listed below are allowable mix adjustments during normal production, the extent of these adjustments allowed, and designation as to who is authorized to make and/or approve these changes. These allowable adjustments only apply during normal production of asphalt mixes. (See Section 7.4.1 above for allowable changes during the plant mix verification process). **Any mix placed without a properly approved Job Mix Formula will be subject to removal.**

A. Mix Changes Allowed By QC Without Prior QA Lab Approval (QA Notification Required via QMS-6).
   1. Cold feed blend change of ± 10% or less from the original JMF target blend percentage per aggregate. (Deletion of a sole source aggregate is not allowed). QA may require rut testing prior to approval of mix change. Blend changes to RAP/RAS are not allowed.
   2. Change in source of asphalt binder. All binder grades must come from sources certified under the Department's PG Asphalt Binder QC/QA Program (proper delivery documents are required).
   3. Addition of new source RAP. Gradation & binder content meet Table 1012-4 of the Standard Specifications and all mix properties of mix with new RAP meet all Specification requirements.
      Note: Above changes shall be documented by QA & QC and will not require a change in the JMF Number, but a comment will be made to the JMF.

B. Mix Changes Allowed By QA Lab Without Asphalt Laboratory's Prior Approval.
   1. Change in JMF mixing temperature of up to plus or minus 15℉ (8℃).
   2. Addition or deletion of a same source aggregate to better control mix properties (JMF change required).

C. Mix Changes Allowed With Asphalt Pavement Specialist's Approval.
   1. Addition of new source RAP if gradation & binder content does not meet Table 1012-4 of the Standard Specifications.
   2. Change of JMF Control Data
      a. Gradation requirements
      b. G_{mm}, G_{mb}, G_{sb}, or G_{se}
      c. % asphalt binder content change of ± 0.1 – 0.5 % from original JMF target.
   3. Per aggregate cold feed blend change of 10 – 15 % of original JMF target.
   4. Any change in anti-strip source, brand, or dosage.
      Note: Anti-Strip changes must have passing TSR's
   5. Any % RAP/RAS change from original JMF target.
   6. Change in JMF mixing temperature greater than plus or minus 15℉ (8℃).
   7. Deletion of a sole source aggregate

D. Mix Changes Only Allowed With Asphalt Design Engineer's Approval.
   1. % asphalt binder content change of greater than 0.5 % from original JMF target.
   2. Per aggregate cold feed blend change greater than ±15 % of original JMF target.
      (A 0.45 power chart with original and new gradations may be required)
   3. Grade of asphalt binder being used.
   4. Any change of the level of a mix type; i.e., S12.5D to a S12.5C or vice versa.

Notes:
1. Items C.1 thru C.3 or D.1 thru D.3 require mix verification prior to normal production*
2. If Items C.4 or D.5 occurs, a TSR shall be required prior to normal production*

***Unless otherwise approved by the Asphalt Design Engineer or his representative.**

7.4.3 Control Charts (QA/QC-6 Form):

Standardized control charts shall be maintained by the Contractor at the Quality Control field laboratory on forms furnished by the Department or produced and stored using the NCDOT QAP program. For mix incorporated into the project, record full test series data from all regularly scheduled random samples, or directed samples which replace regularly scheduled samples, on control charts the same day the tests results are obtained. Partial test series results obtained due to reasons outlined in Subarticle 609-6(B) will be reported to Quality Assurance personnel on the proper forms, but will not be plotted on the control charts. Process Control (PC) samples which are taken within an increment other than regularly scheduled random samples or directed samples that do not replace the scheduled random sample will not be plotted on control charts nor reported to Quality Assurance Laboratory Personnel.

Results of quality assurance tests performed by the Engineer will be posted on the Contractor's control charts as data becomes available.

The following data shall be recorded on standardized control charts:

1. Aggregate Gradation Test Results:
   a. For each mix type: one sieve size smaller than the mix nominal maximum size.
   b. For all mix types: 2.36 mm and 0.075 mm sieves
2. Binder Content, ($\%P_b$)
3. Bulk Specific Gravity of Compacted Specimens ($G_{mb}@N_{des}$) [AASHTO T 166/ ASTM D 6752]
4. Maximum Specific Gravity, (G_{mm}) [AASHTO T 209, ASTM D 2041, or ASTM D 6857]
5. Percent Voids in Total Mix, (VTM) [AASHTO T 269]
6. Percent Voids in Mineral Aggregate, (VMA)
7. Dust / Effective Binder Ratio, ($P_{0.075}/P_{be}$)
8. Percent Maximum Specific Gravity at N_{ini} gyrations, ($\%G_{mm}$ @ N_{ini})

Both the full test series individual test values and the moving average of the last four (4) data points will be plotted on each chart. The Contractor's individual test data will be shown in black and the moving average in red. The Engineer's assurance data will be plotted in blue. Denote moving average control limits with a dash green line, and individual test limits with a dash red line (See example Control Chart on page 7-25).

The moving average(s) shall be continuous except that a new moving average(s) shall be re-established only when:

1. Change in the binder percentage, aggregate blend or G_{mm} is made on the JMF, or
2. When the Contractor elects to stop or is required to stop production after one or two moving average values, respectively, fall outside the control limits outlined in Subarticle 609-6(D).
3. Failure to stop production after two consecutive moving averages exceed the moving average limits occurs, but production does stop at a subsequent time, re-establish a new moving average beginning at the actual production stop point.

In these cases re-establish the moving averages for all mix properties. Moving averages will not be re-established when production stoppage occurs due to an individual test result exceeding the individual test limits and/or specifications.

All individual test results for randomly scheduled or directed samples that replace randomly scheduled samples are part of plant quality control records and must be included in moving average calculations with the following exception. When the Contractor's testing data has been proven incorrect,

use the correct data as determined by the Engineer in lieu of the Contractor's data in accordance with Subarticle 609-6(E). In this case, replace the data in question and any related data proven incorrect.

7.4.4 Control Limits:

The following are established as control limits for mix production. The individual limit shall apply to the individual test results. Control limits for the moving average limits are based on a moving average of the last four (4) data points. Apply all control limits to the applicable target source.

Table 609-1
Control Limits

Mix Control Criteria	Target Source	Moving Average Limit	Individual Limit
2.36mm Sieve	JMF	±4.0 %	±8.0 %
0.075mm Sieve	JMF	±1.5 %	±2.5 %
Binder Content	JMF	±0.3 %	±0.7 %
VTM @ N_{des}	JMF	±1.0 %	±2.0 %
VMA @ N_{des}	Min. Spec. Limit	Min. Spec. Limit	-1.0 %
$P_{0.075}$/ P_{be} Ratio	1.0	±0.4	±0.8
%G_{mm} @ N_{ini}	Max. Spec. Limit	N/A	+2.0 %
TSR	Min. Spec. Limit	N/A	- 15 %

7.4.5 Corrective Actions

All required corrective actions are based upon initial test results and must be taken immediately upon obtaining those results. In the event situations occur which warrant more than one corrective action and/or adjustment, give precedence to the more severe of these actions. Stopping production when required takes precedence over all other corrective actions. All corrective actions shall be documented. QC personnel will not be held retroactively responsible for any actions that would have been required as a result of replacement of QC data by Quality Assurance.

A. Individual Test Exceeding Individual Test Limits

When any of the following occur, production of a mix shall cease immediately.

1. An individual test result for a mix control criteria (including results for required partial test series on mix) exceeds both the individual test control limits and the applicable specification design criteria, or,
2. Two consecutive field TSR values fail to meet the minimum specification requirement, or,
3. Two consecutive binder content test results exceed the individual limits.
4. Two consecutive moving average values for any one of the mix control criteria fall outside the moving average limits.

Production of the mix in question shall not resume until one of the following has occurred:

Option 1: Approval has been granted by the appropriate QA Supervisor.

Option 2: The mix in question has been satisfactorily verified in accordance with Article 609-3. Normal production may resume based on the approval of the contractor's Level II technician, provided notification and the verification test results have been furnished to the QA Lab.

Failure to fully comply with any of the above corrective actions will result in immediate production stoppage by the Engineer. Normal production shall not then resume until a complete verification process has been performed and approved by the Engineer.

Acceptance of all mix failing to meet the individual test control limits (including results for both full and partial test series on mix) or minimum TSR requirements as described above will be determined in accordance with Article 105-3. In addition, any mix, which is obviously unacceptable, will be rejected for use in the work.

Failure to stop production when required due to an individual test(s) not meeting the specified requirements shall subject all mix from the stop point tonnage to the point when the next individual test is back on or within the moving average limits, or to the tonnage point when production is actually stopped, whichever occurs first, to be considered unacceptable. Failure to stop production when required due to two consecutive TSR tests failing to meet the specification requirements shall subject all mix from the stop point tonnage to the point when the next TSR test meets or exceeds specification requirement, or to the tonnage point when production is actually stopped, whichever occurs first, to be considered unacceptable. In either case, this material shall be removed and replaced with materials, which comply with the specifications. Payment will be made for the actual quantities of materials required to replace the removed quantities, not to exceed the original amounts.

B. <u>Moving Average Exceeding Moving Average Limits</u>

The Contractor shall immediately notify the Engineer whenever moving average values exceed the moving average limits.

If two consecutive moving average values for any one of the mix control criteria fall outside the moving average limits, the Contractor shall cease production of that mix and make adjustments. The Contractor may elect to stop production after only one moving average value falls outside the moving average limits. In either case, a new moving average shall not be determined until the fourth test after the elective or mandatory stop in production. Production of the mix in question shall not be resumed until one of the following has occurred:

<u>Option 1:</u> Approval has been granted by the appropriate QA Supervisor.

<u>Option 2:</u> The mix in question has been satisfactorily verified in accordance with Article 609-3. Normal production may resume based on the approval of the contractor's Level II technician, provided notification and the verification test results have been furnished to the QA Lab.

Failure to fully comply with one of the above provisions will result in immediate production stoppage by the Engineer. Normal production shall not then resume until a complete verification process has been performed and approved by the Engineer.

If the process adjustment improves the property in question such that the moving average after four additional tests is on or within the moving average limits, the Contractor may continue production with no reduction in payment.

If the adjustment does not improve the property in question such that the moving average after four additional individual tests is outside the moving average limits, the mix shall be evaluated for acceptance in accordance with Article 105-3. Reduced payment for or removal of the mix in question will be applied starting from the plant sample tonnage at the stop point to the sample tonnage when the moving average is on or within the moving average limits. In addition, any mix which is obviously unacceptable will be rejected for use in the work.

Failure to stop production and make adjustments as described above due to two consecutive moving average values falling outside the moving average limits shall subject all mix produced from the stop point tonnage to the tonnage point when the moving average is back on or within the moving average limits or to the tonnage point when production is actually stopped, whichever occurs first, to be considered

unacceptable. This material shall be removed and replaced with materials, which comply with the specifications, unless otherwise approved by the Engineer. Payment will be made for the actual quantities of materials required to replace the removed quantities, not to exceed the original amounts.

QA/QC-6 (SP)

North Carolina Department of Transportation

Hot Mix Asphalt Quality Control Chart

Type Mix: RS 9.5 B Contractor: Excellent Paving Co. Mix Parameter: 0.075mm

JMF No: 09-001-151 Plant Location: Quality, NC JMF Target: 4.0

Year: 20 10

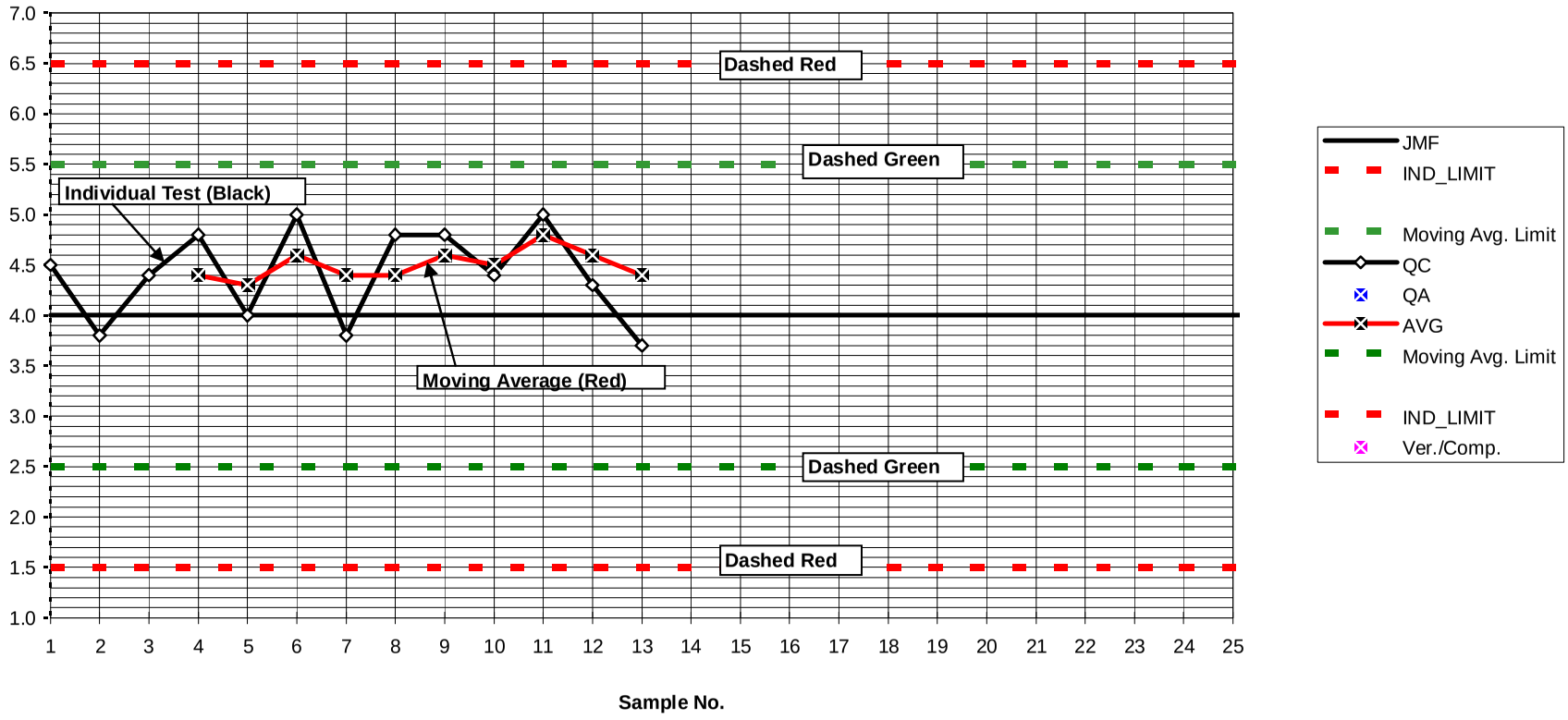

7.5 SAMPLING PROCEDURES

7.5.1 Aggregate, RAP, and RAS Sampling

Since the reason for sampling aggregates is to determine the gradation, it is necessary that they be sampled correctly. The results of a sieve analysis should reflect the condition and characteristics of the aggregate from which the sample is obtained. Therefore, when sampling, it is important to obtain a representative sample. Unless it is truly representative, tests apply to the sample only and not to the entire aggregate shipment or stockpile. Accuracy in sampling is equally as important as accuracy in testing.

Sampling methods will be as specified in AASHTO T 2 and AASHTO T 168 Modified. Sample sizes shall be at least 10 lbs. (4.5 kg) for fine aggregates and 25 lbs. (11 kg) for coarse aggregates, RAP, and RAS. Samples of RAP and RAS shall be mixed and quartered as specified in "Reduction of Samples to Testing Size" below. Split aggregate samples are not required, however, split RAP and RAS samples are required.

In many cases, a representative sampling cannot be obtained by a single sample. Multiple samples may be necessary to obtain a true picture of the properties of a stockpile or source of material. As the maximum particle size in the aggregate increases, the size of the sample must increase to maintain accuracy in testing. In addition, the number and types of tests determine the size sample needed.

There are four principal aggregate sampling points that are of concern at an asphalt plant. These are (1) the source of materials, (2) the stockpile, (3) the cold feed and (4) the hot storage bin at a batch plant. When sampling at the source of materials, it would be well to remember one general rule. It is easier to obtain a representative sample from the production stream, such as from the conveyor belt, than from trucks, storage bins or stockpiles. However, if the sample is taken from the conveyor belt, it must be removed from the entire cross-section of the belt. The same would be true when sampling from the chutes of cold feeders or hot bins at batch plants.

Getting a sample from a stockpile is not easy, and great care must be taken to obtain a truly representative sample. Segregation usually occurs when the material is stockpiled, because the coarser particles will roll to the base of the pile. If a stockpile of sand is to be sampled, it is usually only necessary to remove the dry layer where the segregation occurs and sample the damp material below. Samples of coarse aggregates from stockpiles should be taken at or near the top and base, and at a number of locations in the stockpile. To prevent further segregation while sampling, a board may be shoved into the pile just above the sampling area. Another method of sampling coarse aggregate materials would be to expose the face of the stockpile from the top to the bottom, with a front end loader. The samples could then be taken from the exposed face. Another method would be to have the front end loader take a scoop from bottom to top and dump the material in a convenient location for sampling. The sample bag could then be filled from various locations around the scoop of material. Fine aggregate may also be sampled with a sampling tube approximately 1 1/4 in. (32 mm) in diameter and 6 ft. (1.8 m) long.

A sample of coarse or fine aggregate may be obtained by passing a container through the complete flow of that particular material under the cold storage bins. If stockpile variation is to be determined, samples should be taken at various points and tested separately. The outer layer of the stockpile should be pushed aside and not included in the sample because it may have dried and become segregated. In sampling coarse aggregate, a board may be pushed into the pile at this point and the sample taken below the board. This should be done near the top, middle and bottom of coarse aggregate stockpiles and then the three samples blended. When sampling local sands from pits or proposed pits, using some type of auger, it is desirable to retain different strata as separate samples.

7.5.2 Numbering of Mix Samples

The numbering of all samples shall be the responsibility of the Contractor's QC personnel. QC sample numbers shall be assigned to all samples taken for mix that will be incorporated into a QMS project. This QC sample number shall also be assigned to all related samples and tests. A separate series of numbers will be maintained for each mix design for each plant location. Each series of numbers will begin with the first sample taken for each mix design at each plant location and will progress in sequential order until the end of the calendar year. A new number series and accumulative tonnage will start over at the beginning of production each calendar year.

The sample numbers will be assigned to full test series as follows. The first two digits will be the last two numbers of the current calendar year followed by a dash (-), followed by a sequence number beginning with one and progressing in numerical order as samples are taken. For example: 12-1 and 12-2 would be the first two samples taken in 2012 for a particular mix design at a particular plant location.

Partial test series mix samples will be numbered with the same number as the full test series sample number for that increment, except it will be followed by a P1 for the first partial test within a test increment, P2 for the second one in the same increment, etc. For example, if two partial test samples were taken from the increment represented by sample number 12-2 above, these partial test sample numbers would be 12-2P1 and 12-2P2. This numbering procedure applies regardless of whether or not a full test series sample has been taken for the applicable increment.

7.5.3 Sampling Mix From the Truck

Quality Control sampling will primarily be the Contractor's responsibility. The Department will perform the Verification Sampling process. The mix sampling and splitting process shall be in accordance with the procedures covered in Sections 7.5.5 and 7.5.6 of this Manual.

A suitable sampling platform shall be provided on which the technician is able to stand and sample the material in the truck bed. It is recommended that the platform be constructed such that the truck is able to park on either side in order to prevent the technician from having to climb into the truck bed. If it is not possible for the platform to be constructed in this manner then two appropriately constructed separate platforms shall be provided or the truck required to reverse direction so that the sample may be obtained.

7.5.4 Sampling Device

The shovel or other sampling device shall be of such size and configuration that each increment of a sample can be obtained in one attempt without spilling or rolling off.

7.5.5 Sample Location in Truck

When the last batch has been dumped into the truck box, establish a point on the surface of the load, either at the high point, if some semblance of a conical shape exists, or near the middle of the truck box if the surface shows no such conical shape. Then establish at least three incremental sample points about midway between the previously established point and the sides of the truck and equally spaced around the load (see sketch).

At each of these sampling points, **remove the upper 6 - 12 inches** (150 - 300 mm) of mix, insert the sampling shovel or other device into the mix and extract the sample material. This sampling should begin at one of the three locations and then continue in a rotational manner in such a way as to insure that each container/bucket contains mix from each sampling point in the truck. The total full test series sample shall weigh at least 200 lbs. (91 kg). All partial test series samples shall weigh at least 100 lbs. (45 kg).

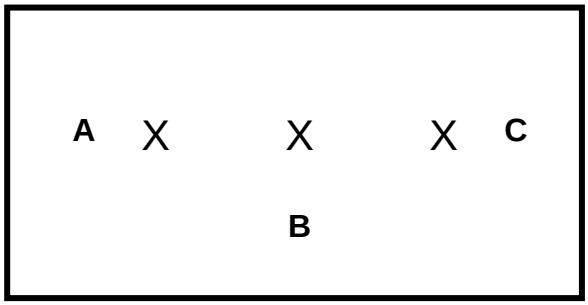

X = High Points in Truck
A = Sample Point
B = Sample Point
C = Sample Point

**IF TRUCK IS LOADED CORRECTLY THERE WILL BE THREE HIGH POINTS

7.5.6 Obtaining Mix Samples (Full and Partial Test Series)

Divide mix sample into QA and QC samples. The entire 200 lbs. (91 kg) sample for a Full Test Series or 100 lbs. (45 kg) for a Partial Sample will be taken from the truck in **4 separate** buckets. Each bucket will have approximately 50 lbs. (23 kg) of material for a Full Test Series or 25 lbs. (11 kg) for a Partial Sample. Each bucket shall also have material from each sampling point in the truck.

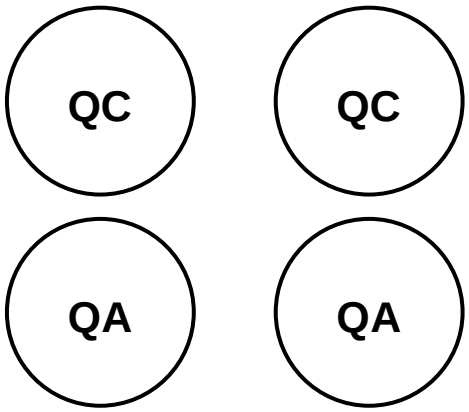

Mix = 200 lbs. (91 kg) Full Test Series
(approx. 50 lbs. (23 kg) in each bucket)
Mix = 100 lbs. (45 kg) Partial Test Series

The two buckets that form the QA sample shall be put into two separate cloth sample bags furnished by the Contractor. A white sample card (QC-7) shall be attached to the sample bag(s). This sample shall be stored by the Contractor in a safe dry place for 5 days, or until disposal permission is given by the Quality Assurance personnel, whichever occurs first.

One of the QC buckets shall be considered the QC referee sample. This sample shall also be put in one or more cloth sample bags furnished by the Contractor. An orange sample card (QC-7), furnished by the Department, shall be attached to the sample bag(s). The referee sample shall be stored by the Contractor in a safe dry place for a period of up to 5 calendar days, or until disposal permission is given by the Quality Assurance personnel, whichever occurs first. When the Department picks up its portion of a split sample, the matching “Referee Sample” shall also be procured by the QA personnel. If differences exist between the QA and QC test results, the referee sample will then normally be tested jointly by QA and QC.

The remaining fourth QC bucket shall be reduced in size to the appropriate test samples as indicated next.

7.5.7 QC Quartering (Mix Sample for Full and Partial Test Series)

Step 1 (QC):
The remaining bucket from the Contractor's portion of the sample should be emptied onto the splitting table and shaped into a conical pile. Carefully flatten the conical pile to a uniform thickness and diameter by pressing down the apex. Divide the flattened mass into four quarters by inserting the quartering template and pressing down until the template is in complete contact with the splitting table surface. The samples for the needed tests shall then be removed from the quarters according to the following sketch:

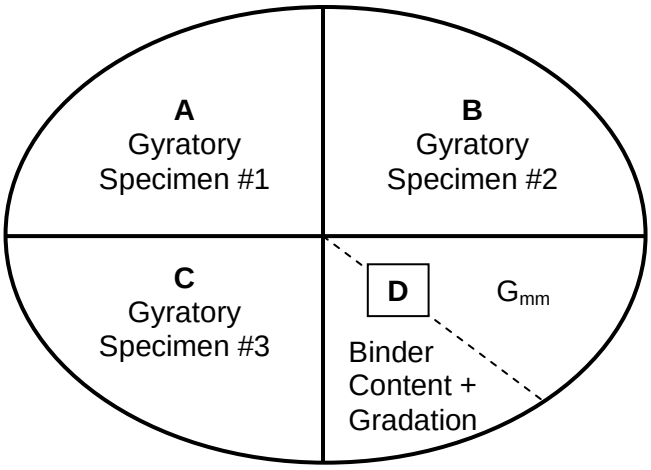

Mix for Full Test Series = 50 lbs. (23 kg)
Mix for Partial Test Series = 25 lbs. (11 kg)

Step 2 (QC):
With the quartering template in place, material from each quarter (A, B, & C) from **Step 1 (QC)** should be scooped out and used to weigh out the necessary amount of mix for compaction of each Gyratory specimen as required. Care should be taken when scooping from each quarter such that no segregation occurs. Once the necessary amount of mix needed for each specimen is removed from each quarter, any remaining material should be discarded.

Step 3 (QC):
With the quartering template still in place, material from the remaining quarter (D) from **Step 1 (QC)** shall be split again with a trowel and one half used to weigh out the necessary amount of mix for a maximum specific gravity (G_{mm}) test sample and the other half used for a binder content & gradation test sample. Any remaining material should be discarded.

Note: For the above method of quartering to achieve proper test results, it is imperative that each bucket from **7.5.6** be filled in the rotational manner described such that each bucket contains mix from each sampling point in the truck.

7.5.8 QC Quartering (RAP or RAS Samples)

The 25 lb (11 kg) RAP or RAS sample shall be quartered by the Contractor to obtain the appropriate size sample for binder content and gradation tests. Split portions of RAP or RAS samples will be retained for a period of 5 calendar days, commencing the day the sample(s) is tested, or until disposal permission from QA personnel is given, whichever occurs first. QA personnel will also take verification RAP or RAS samples directly from the cold feed or stockpile.

7.5.9 QA Quartering (Mix Sample for Full and Partial Test Series)

Step 1 (QA):

On samples that the Engineer elects to test, both bags containing the 100 lbs (45 kg) sample shall be brought to the QA Lab. If this sample is a mix sample, reheating to a workable condition in an oven will be necessary for cold samples.

One of the bags should be emptied onto the splitting table and shaped into a conical pile. Carefully flatten the conical pile to a uniform thickness and diameter by pressing down the apex. Divide the flattened mass into four quarters by inserting the quartering template and pressing down until the template is in complete contact with the splitting table surface. The samples for the needed tests shall then be removed from the quarters according to the following sketch:

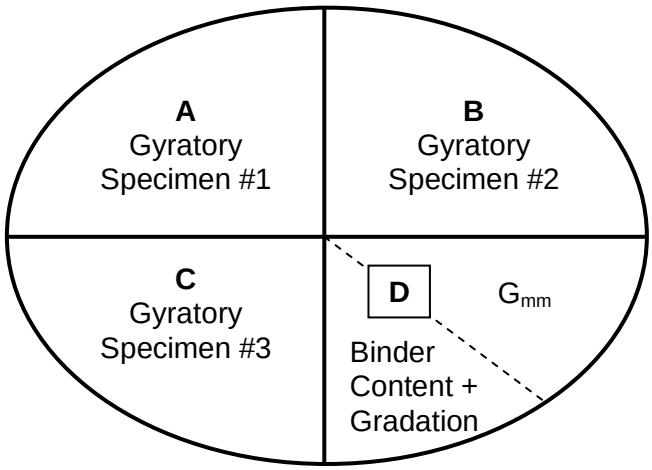

Mix for Full Test Series = 50 lbs. (23 kg)
Mix for Partial Test Series = 25 lbs. (11 kg)

The remaining bag will be retained for possible referee testing if needed.

Step 2 (QA):

With the quartering template in place, material from each quarter (A, B, & C) from **Step 1 (QA)** should be scooped out and used to weigh out the necessary amount of mix for compaction of each Gyratory specimen as required. Care should be taken when scooping from each quarter such that no segregation occurs. Once the necessary amount of mix needed for each specimen is removed from each quarter, any remaining material should be discarded.

Step 3 (QA):

With the quartering template still in place, material from the remaining quarter (D) from **Step 1 (QA)** shall be split again with a trowel and one half used to weigh out the necessary amount of mix for a maximum specific gravity (G_{mm}) test sample and the other half used for a binder content & gradation test sample. Any remaining material should be discarded.

7.5.10 QA Quartering (Aggregates, RAP & RAS)

When aggregate, RAP or RAS samples are taken by QA personnel, the reduction of samples to testing size shall be accomplished by either using a sample splitter or the quartering method. These samples will be taken at the specified frequency for quality assurance testing.

7.6 TEST PROCEDURES - GENERAL

All test procedures utilized by the Department are generally in accordance with AASHTO or ASTM standards. Any modifications to these procedures are covered in detail in the following sections. Other test procedures may be used by the Contractor provided they are preapproved by the Department. Most of the acceptable Standard / Modified test procedures are covered next. When specified test(s) applies to either or both parties (Contractor and/or Department), the same standard test procedures will be followed by each. The following standard test methods from AASHTO and ASTM are referenced in the next sections:

Standard No.	Title	Page No.
AASHTO T 11	Materials Finer Than 75-µm (No. 200) Sieve in Mineral Aggregates by Washing	7-32
AASHTO T 27	Sieve Analysis of Fine and Coarse Aggregates	7-34
AASHTO T 255	Total Evaporable Moisture Content of Aggregate by Drying	7-36
AASHTO T 30	Mechanical Analysis of Extracted Aggregate	7-38
AASHTO T 308	Determining the Asphalt Binder Content of Hot-Mix Asphalt (HMA) by the Ignition Method	7-41
AASHTO T 312	Preparing and Determining the Density of Hot-Mix Asphalt (HMA) Specimens by Means of the Superpave Gyratory Compactor	7-47
AASHTO T 209; ASTM D 2041	Theoretical Maximum Specific Gravity and Density of Hot-Mix Asphalt (HMA) Paving Mixtures	7-51
ASTM D 6857	Maximum Specific Gravity and Density of Bituminous Paving Mixtures Using Automatic Vacuum Sealing Method	7-55
AASHTO T 166	Bulk Specific Gravity of Compacted Hot-Mix Asphalt (HMA) Using Saturated Surface-Dry Specimens	7-58
ASTM D 6752	Bulk Specific Gravity and Density of Compacted Bituminous Mixtures Using Automatic Vacuum Sealing Method	7-60
AASHTO T 283	Tensile Strength Ratio (TSR) Test	7-63
AASHTO T 305	Determination of Draindown Characteristics in Uncompacted Asphalt Mixtures	7-69

7.7 MATERIALS FINER THAN 75 µm (No. 200) SIEVE IN MINERAL AGGREGATES BY WASHING (AASHTO T 11 Modified) and TEST METHOD FOR SIEVE ANALYSIS OF FINE AND COARSE AGGREGATES (AASHTO T 27 Modified)

These test methods cover determination of the amount of material finer than a 75 µm (No. 200) sieve in aggregate by washing and the determination of the particle size distribution of fine and coarse aggregates, by sieving. Clay particles and other aggregate particles that are dispersed by the wash water, as well as water-soluble materials, will be removed from the aggregate during the test.

7.7.1 General

A. A sample of the aggregate is washed in a prescribed manner, using water containing a wetting agent, as specified. The decanted wash water, containing suspended and dissolved material, is passed through a 75-µm (No. 200) sieve. The loss in mass resulting from the wash treatment is calculated as mass percent of the original sample and is reported as the percentage of material finer than a 75-µm (No. 200) sieve by washing.

B. This method is used primarily to determine the grading of materials proposed for use as aggregates or being used as aggregates. The results are used to determine compliance of the particle size distribution with applicable specification requirements and to provide necessary data for control of the production of various aggregate products and mixtures containing aggregates.

7.7.2(a) Materials Finer Than 75 µm (No. 200) Sieve In Mineral Aggregates By Washing (AASHTO Designation: T 11 Modified)

A. Equipment

(1) Balance - The balance or scale shall be sensitive to within 0.1 percent of the weight of the sample to be tested.

(2) Sieves - A nest of two sieves, the lower being a 75 µm (No. 200) sieve and the upper being a 1.18 mm (No. 16), both conforming to the requirements of M 92.

(3) Oven - The oven shall be capable of maintaining a uniform temperature of 230 ± 9°F (110 ± 5°C). A hot plate may be satisfactory if turned to a lower temperature and the aggregate stirred to prevent local overheating.

(4) Container - The container (bowl) shall be of sufficient size to contain the sample covered with water and to permit vigorous agitation without any loss of material or wash water.

(5) Wetting Agent - any dispersing agent such as liquid dishwashing detergent which will promote separation of the fine material.

B. Sample

(1) Samples for sieves analysis shall be obtained from the material to be tested by the use of a sample splitter or by the method of quartering. Fine aggregate sampled by the quartering method shall be thoroughly mixed and in a moist condition. The sample for testing shall be approximately the weight desired and shall be the end result of the splitting or quartering method. **The selection of samples of an exact predetermined weight shall not be attempted**.

(2) Thoroughly mix the sample of aggregate to be tested and reduce the quantity to an amount suitable for testing using the applicable methods described in T 248. If the same test sample is to be tested

according to T 27, the minimum mass shall be as described in the applicable sections of that method. Otherwise, the mass of the test sample, after drying, shall conform with the following:

Nominal Maximum Size	Minimum Weight Of Test Sample
37.5 mm or larger	5000 grams
25.0 mm	2500 grams
19.0 mm	2000 grams
12.5 mm	1500 grams
9.5 mm	1000 grams
4.75 mm	500 grams

C. <u>Procedure</u>

(1) Dry the sample at 230 ± 9°F (110 ± 5°C) to a constant weight and determine the weight to the nearest 0.1 gram.

(2) The test sample, after being dried and weighed, shall be placed in a container and covered with water. Add a sufficient amount of wetting agent to assure a thorough separation of the material finer than the No. 200 (0.075 mm) sieve from the coarser particles. The contents of the container shall be agitated vigorously and the wash water immediately poured over a nest of two sieves consisting of a No. 10 or No. 16 (2.00 or 1.18 mm) sieve over a No. 200 (0.075 mm) sieve. The use of a large spoon to stir and agitate the aggregate in the wash water has been found satisfactory.

(3) The agitation shall be sufficiently vigorous to result in the complete separation of all particles finer than the No. 200 (0.075 mm) sieve from the coarse particles and bring them into suspension in order that they may be removed by decantation of the wash water. Care should be taken to avoid, as much as possible, the decantation of the coarse particles of the sample. The operation shall be repeated until the wash water is clear.

(4) All material retained on the nested sieves shall be returned to the container. The washed aggregate in the container shall be dried to a constant weight at 230 ± 9°F (110 ± 5°C) and weighed to the nearest 0.1 gram.

D. <u>Report</u>

The percentage passing the No. 200 (75-µm) sieve shall be reported to the nearest 0.1 percent. Percentages shall be calculated on the basis of the total dry weight of the sample.

7.7.2(b) Test Method For Sieve Analysis Of Fine And Coarse Aggregates (AASHTO T 27 Modified)

A. Equipment

(1) Balance - The balance or scale shall be sensitive to within 0.1 percent of the weight of the sample to be tested.

(2) Sieves - The sieves with square openings shall be mounted on substantial frames constructed in a manner that will prevent loss of material during sieving. Suitable sieve sizes shall be selected to furnish the information required by the specifications covering the material to be tested. The woven wire cloth sieves shall conform to the Wire-Cloth Sieves for Testing Purposes (AASHTO M 92).

(3) Sieve Shaker - a mechanical sieving device that shall create motion of the sieves to cause the particles to bounce, tumble, or otherwise turn so as to present different orientations to the sieving surface. The sieving action shall be such that the criterion for adequacy of sieving described in AASHTO T 30, Section 6.7 is met in a reasonable time period. The sieve shaker shall have a timer that will automatically control sieving time.

(4) Oven - The oven shall be capable of maintaining a uniform temperature of 230 ± 9℉ (110 ± 5℃). A hot plate may be satisfactory if turned to a lower temperature and the aggregate stirred to prevent local overheating.

B. Sample

(1) Samples for sieves analysis shall be obtained from the material to be tested by the use of a sample splitter or by the method of quartering. Fine aggregate sampled by the quartering method shall be thoroughly mixed and in a moist condition. The sample for testing shall be approximately the weight desired and shall be the end result of the splitting or quartering method. **The selection of samples of an exact predetermined weight shall not be attempted**.

(2) In no case shall the fraction retained on any sieve at the completion of the sieving operation weigh more than 4 g/in^2 (7 kg/m^2) of sieving surface.

Note: This amounts to 450 grams for the usual 12 in. (300 mm) diameter sieve. The amount of material retained on the critical sieve may be regulated by:

a. Placing a sieve with larger openings than the overloaded sieve, above that sieve

or, b. By the proper selection of the size of the sample.

(3) Samples of coarse aggregate for sieve analysis shall weigh, after drying, not less than the amount indicated in the following table:

Nominal Maximum Size	Minimum Weight Of Stockpile Sample	Minimum Weight Of Test Sample
37.5 mm	15000 grams	3000 grams
25.0 mm	10000 grams	3000 grams
19.0 mm	5000 grams	2000 grams
12.5 mm	5000 grams	1500 grams
9.5 mm	5000 grams	1200 grams
4.75 mm	5000 grams	1200 grams
Note: All gradations shall be performed using 12” diameter sieves.		

Note: The Nominal Maximum Particle Size is defined as the sieve size which is one sieve size larger than the first sieve to retain more than 10 percent of the total material.

(4) In the case of mixtures of fine and coarse aggregates, the material shall be separated into two sizes on the 2.36 mm sieve and the samples of fine and coarse aggregates shall be prepared in accordance with the table above.

(5) Whenever the amount of material finer than the No. 200 (75-µm) sieve is to be determined by washing, first test the sample in accordance with the steps for AASHTO T 11 Modified through the final drying operation.

C. <u>Procedure</u>

(1) Dry the sample at 230 ± 9°F (110 ± 5°C) to a constant weight and determine the weight to the nearest 0.1 gram.

(2) The test sample, after being dried and weighed, shall be test according to AASHTO T 11 Modified.

(3) All material retained on the nested sieves shall be returned to the container. The washed aggregate in the container shall be dried to a constant weight at 230 ± 9°F (110 ± 5°C) and weighed to the nearest 0.1 gram.

(4) The aggregate shall then be sieved over sieves of various sizes required by the specification covering the material to be tested, including the No. 200 (75-µm) sieve. Nest the sieves in order of decreasing size of opening from top to bottom and place the sample on the top sieve.

(5) Agitate the sieves by hand or by mechanical apparatus for a period of 10 minutes. The sieving operation shall be conducted by means of a lateral and vertical motion of the sieve, accompanied by jarring action so as to keep the sample moving continuously over the surface of the sieve. In no case shall fragments in the sample be turned or manipulated through the sieve by hand.

Note: It is important to limit the quantity of material on a given sieve so that all particles have opportunity to reach sieve openings a number of times during the sieving operation. If overloading of a sieve is suspected, the sieving adequacy should be checked as per the requirements of AASHTO T 27, Sections 8.3 and 8.4.

(6) Determine the weight of each size increment by weighing on a balance conforming to the requirements of Equipment Section 7.7.3.A. The total weight of the material after sieving should check closely with the original weight of the sample placed on the sieves.

(7) If the sample has previously been tested by AASHTO T 11 Modified, add the weight finer than the No. 200 (75-µm) sieve determined by that method to the weight passing the No. 200 (75-µm) sieve by dry sieving of the sample.

D. <u>Report</u>

The results of the sieve analysis shall be reported as total percentages passing each sieve. Final percentages shall be reported to the nearest whole number, except the percentage passing the No. 200 (75-µm) sieve shall be reported to the nearest 0.1 percent. Percentages shall be calculated on the basis of the total dry weight of the sample. The QA/QC-1 form shall be used to report sieve analysis of coarse and fine aggregates.

7.8 MOISTURE CONTENT OF AGGREGATE BY DRYING (AASHTO T 255 Modified)

Since aggregate in a drum mix operation, unlike that of a batch operation, is weighed before drying, moisture content of the aggregate must be determined. The weighing of aggregate and the metering of asphalt binder are interlocked electronically in drum mix operations. To ensure proper metering of asphalt binder, adjustments for aggregate moisture must be made. The moisture content of the aggregate should be determined and proper allowance made for the water content, prior to mixing.

7.8.1 General

A. Moisture determination shall be performed prior to starting of mixing and subsequently thereafter as changes occur in the condition of the aggregate. A minimum of one (1) moisture test per day's operation shall be performed by the QC technician at a drum mix plant operation. Additional tests should be made when conditions in the stockpiles or supply change.

B. Calculations of the percent moisture in the aggregate samples will be to the nearest 0.1 percent (x.x). To determine the moisture content of aggregate being used, it is necessary to secure a representative sample of the aggregate. When sampling, it would be well to remember one general rule. It is easier to obtain a representative sample from the production stream, such as from the conveyor belt, than from storage bins or stockpiles. When the sample is taken from the conveyor belt, it should be removed from the entire cross-section of the belt. The size of the sample taken is determined by the nominal maximum aggregate size. Regardless of the size of the aggregate, the procedure for making an aggregate moisture determination is basically the same.

7.8.2 Equipment

A. Balance - the balance shall have sufficient capacity, be readable to 0.1 percent of the sample weight, or better, and conform to the requirements of AASHTO M 231.

B. Oven - a ventilated oven of appropriate size capable of maintaining a uniform temperature of 230° ± 9°F (110° ± 5°C).
(Hot plate with an appropriately sized pan would also be considered suitable).

7.8.3 Sample

Obtain a representative sample of the material from the production line (Conveyor belt) and having a weight not less than the amount shown below:

Sample Size for Aggregate	
Nominal Maximum Aggregate Size	Minimum Weight of Sample
37.5 mm	6000 grams
25.0 mm	4000 grams
19.0 mm	3000 grams
12.5 mm	2000 grams
9.5 mm	1500 grams
4.75 mm	500 grams

7.8.4 Procedure

A. Determine the weight of the aggregate sample to the nearest 0.1 gram. **[Wet Weight]**

B. Dry the sample thoroughly in the sample container by means of the selected source of heat, exercising care to avoid loss of any particles. Very rapid heating may cause some particles to explode, resulting in loss of particles. Use a controlled temperature oven when excessive heat may alter the character of the aggregate, or where more precise measurement is required. If a hot plate is used, stir the sample during drying to accelerate the operation and avoid localized overheating.

C. Determine the weight of the dried sample to the nearest 0.1 gram after it has cooled sufficiently not to damage the balance. **[Dry Weight]**

D. Determine the moisture content of the sample. The percent moisture is determined by the following formula:

$$\textbf{\% Moisture} = \frac{\textbf{Wet Weight - Dry Weight}}{\textbf{Dry Weight}} \times 100$$

Example: Wet Weight = 1225.0 grams
Dry Weight = 1175.0 grams

$$\text{\% Moisture} = \frac{1225.0 - 1175.0}{1175.0} \times 100 = 4.3\ \%$$

7.8.5 Report

Report results to nearest 0.1% (x.x).

Moisture content results should be maintained as a part of the QC or QA Lab records.

7.9 SIEVE ANALYSIS OF RECOVERED AGGREGATE (AASHTO T 30 Modified)

This test method outlines the procedure for determination of particle size distribution of aggregate recovered from asphalt mixtures and RAP/RAS materials. The results of this procedure are used to determine compliance of the gradation of the recovered aggregates with applicable specification requirements.

7.9.1 General

A. Washed gradations will be performed on the recovered aggregate from the mix and individual RAP samples.
B. Final calculations of the percent passing each sieve size will be to the nearest whole number except that the No. 200 (75 µm) sieve will be to the nearest 0.1 percent (x.x). Calculation of asphalt binder content will be to the nearest 0.1 percent (x.x).

7.9.2 Equipment

A. Balance - the balance shall have sufficient capacity, be readable to 0.1 percent of the sample weight or better, and conform to AASHTO M 231.
B. Sieves - the sieves with square openings shall be mounted on substantial frames constructed in a manner that will prevent loss of material during sieving. Suitable sieve sizes shall be selected to furnish the information required by the specifications covering the material to be tested. The woven wire-cloth sieves shall conform to AASHTO M 92.
C. Oven - the oven of appropriate size, capable of maintaining a uniform temperature of 230 ± 9°F (110 ± 5°C).
D. Sieve Shaker - a mechanical sieving device that shall create motion of the sieves to cause the particles to bounce, tumble, or otherwise turn so as to present different orientations to the sieving surface. The sieving action shall be such that the criterion for adequacy of sieving described in AASHTO T 30, Section 6.7 is met in a reasonable time period. The sieve shaker shall have a timer that will automatically control sieving time.
E. Wetting Agent - any dispersing agent, such as Calgon, Joy, or other detergent that will promote separation of the fine materials.
F. Container and utensils - a pan or vessel of a size sufficient to contain the sample covered with water and to permit vigorous agitation without loss of any part of the sample or water.

Note: The use of a mechanical apparatus to perform the washing operation is allowable, provided the results are consistent with those obtained using manual operations. The use of some mechanical washing equipment with some samples may cause degradation of the sample.

7.9.3 Sample

The sample shall consist of the entire sample of aggregate obtained according AASHTO T 308 Modified.

Note: If more than 24 hours pass between the completion of T 308 and the beginning of this test procedure, or if the sample has been stored in a high-humidity environment, or has otherwise been subjected to moisture, the sample should be re-dried to constant mass.

7.9.4 Procedure

A. Dry the sample, if necessary, until further drying at 230 ± 9ºF (110 ± 5ºC) does not alter the weight by 0.1 percent.

B. Determine and record the weight of the sample to the nearest 0.1 gram. The test sample shall be placed in a container and covered with water. Add a sufficient amount of wetting agent to assure a thorough separation of the material finer than the No. 200 (75-µm) sieve from the coarser particles.
The contents of the container shall be agitated vigorously and the wash water immediately poured over a nest of two sieves consisting of a No. 10 or No. 16 (2.00- or 1.18-mm) sieve superimposed on a No. 200 (75-µm) sieve. The use of a large spoon to stir and agitate the aggregate in the wash water has been found satisfactory.

Note: There should be enough wetting agent to produce a small amount of suds when the sample is agitated. The quantity will depend on the hardness of the water and the quality of the detergent. Excessive suds may overflow the sieves and carry some material with them.

D. The agitation shall be sufficiently vigorous to result in the complete separation of all particles finer than the No. 200 (75 µm) sieve from the coarse particles and bring them into suspension in order that they may be removed by decantation of the wash water. Care should be taken to avoid, as much as possible, the decantation of the coarse particles of the sample. The operation shall be repeated until the wash water is clear.

E. All material retained on the nested sieves shall be returned to the container. The washed aggregate in the container shall be dried to constant weight at 230 ± 9℉ (110 ± 5℃) and weighed to the nearest 0.1 gram.

F. The aggregate shall then be sieved over sieves of various sizes required by the specification covering the mixture, including the No. 200 (75 µm) sieve. Nest the sieves in order of decreasing size of opening from top to bottom and place the sample on the top sieve. Agitate the sieves by hand or by mechanical apparatus for a period of 10 minutes.

Note: It is important to limit the quantity of material on a given sieve so that all particles have opportunity to reach sieve openings a number of times during the sieving operation. If overloading of a sieve is suspected, the sieving adequacy should be checked as per the requirements of AASHTO T 30, Sections 6.6 & 6.7.

G. Record the weight of material passing each sieve and retained on the next and the amount passing the No. 200 (75 µm) sieve.

Example: Aggregate Weight After Ignition = 1518.1 grams
Aggregate Weight After Washing = 1435.1 grams
Weight Loss From Washing = (1518.1 - 1435.1) = 83.0 grams

$$\textit{Percent Retained} = \frac{\textit{Cumulative Weight Retained}}{\text{(Pan Wt. + Wt. Loss from Washing)}} \times 100$$

Percent Passing = (100% - *Percent Retained*)

Sieve Size	*Cumulative Weight Retained*	*Percent Retained*	*Percent Passing*
3/4"	---	---	100
1/2"	150.3	9.9	90
3/8"	402.1	26.5	74
#4	789.7	52.0	48
#8	1064.6	70.1	30
#16	1207.4	79.5	21
#30	1300.0	85.6	14
#50	1362.6	89.8	10
#100	1408.6	92.8	7
#200	1428.6	94.1	5.9
PAN	1434.9	---	---

Note 1: Another method uses a constant in the percent retained calculations. The formula for this method of calculation is as follows:

Percent Retained = Cumulative Weight Retained X Constant

$$\text{Where the Constant is} = \frac{100}{\text{Pan Wt. + Wt. Loss From Washing}}$$

$$\text{Example Constant for Above} = \frac{100}{1434.9 + 83.0} = 0.0658805$$

Note 2: The Pan Weight after sieving must equal the Aggregate Weight After Washing within 0.2 %.

$$\frac{\text{(Agg. Wt. After Washing) - (Pan Wt.)}}{\text{Agg. Wt After Washing}} \times 100 = \frac{(1435.1 - 1434.9)}{1435.1} \times 100 = 0.014\% \quad \boxed{< 0.2\%} \checkmark \textbf{ OK}$$

7.9.5 <u>Report</u>

The QA/QC-1 form will be used to record weights and calculate percent aggregate passing each sieve size. Report each sieve size to the nearest whole number, except the amount passing the No. 200 (75 µm) sieve which is to be reported to the nearest one-tenth percent.

7.10 DETERMINING THE ASPHALT BINDER CONTENT OF HOT-MIX ASPHALT (HMA) BY THE IGNITION METHOD (AASHTO T 308 MODIFIED)

The Contractor and/or Department may determine Binder content by using an ignition furnace. Results of each test must be recorded on either a standardized data sheet or a computer printout from the ignition furnace. This test data must be included with all other QC or QA test results for each sample tested.

7.10.1 General

This procedure can be used for the quantitative determination of asphalt binder content of hot-mixed paving mixtures or RAP/RAS materials by ignition of the asphalt binder at temperatures that reach the flashpoint of the binder in a furnace. This method does not require the use of solvents. The aggregate remaining after burning can be used for washed sieve analysis using AASHTO T 30 Modified.

This procedure may involve hazardous materials, operations, and equipment. This procedure does not purport to address all of the safety problems associated with its use. It is the responsibility of the user of this procedure to consult and establish appropriate safety and health practices.

The asphalt binder in the paving mixture is ignited using the furnace equipment applicable to this procedure. The asphalt binder content is calculated as the difference between the initial weight of the asphalt paving mixture and the weight of the residual aggregate, the calibration factor, and moisture content. The asphalt binder content is expressed as weight percent of moisture-free mixture.

7.10.2 Equipment

A. Ignition Furnace - a forced air ignition furnace that heats the sample by either convection or direct infrared (IR) irradiation method. The convection type furnace must be capable of maintaining the temperature at 1072℉ (578℃), with an internal bal ance thermally isolated from the furnace chamber accurate to 0.1 g. The balance shall be capable of weighing a 3500 gram sample in addition to the sample baskets. A data collection system will be included so that the weight can be automatically determined and displayed during the test. The furnace shall have a built in computer program to calculate change in weight of the sample and provide for the input of a calibration factor for aggregate loss. The furnace shall provide a printed ticket with the initial specimen weight, per minute specimen weight loss, temperature compensation, calibration factor, corrected asphalt binder content (%), test time, and test temperature. The furnace chamber dimensions shall be adequate to accommodate a sample size of 3500 grams. The furnace shall provide an audible alarm and indicator light when the sample weight loss does not exceed 0.01 percent of the total sample weight for three consecutive minutes. The furnace shall be equipped so that the door cannot be opened during the ignition test. A method for reducing furnace emissions shall be provided. The furnace shall be vented into a hood or to the outside and, when set up properly, shall have no noticeable odors escaping into the laboratory. The furnace shall have a fan with the capability to pull air through the furnace to expedite the test and to reduce the escape of smoke into the laboratory.

B. Sample Baskets - baskets of appropriate size that allows the samples to be thinly spread and allows air to flow up through and around the sample particles. Sets with two or more baskets shall be nested. The sample shall be completely enclosed with screen mesh, perforated stainless steel plate, or other suitable material.

Note: Screen mesh with maximum and minimum openings of No. 8 (2.36 mm) and No. 30

(0.600 mm), respectively, has been found to perform well.

C. Catch Pan - a pan of sufficient size to hold the sample baskets so that aggregate particles and melting asphalt binder falling through the screen mesh are caught.
D. Oven - an oven capable of maintaining a temperature of 257 ± 9°F (125 ± 5°C).
E. Balance - a balance having sufficient capacity and conforming to the requirements of AASHTO M 231 Class G2 for weighing the sample and baskets.
F. Safety Equipment - this equipment should include: safety glasses or face shield, high temperature gloves, long sleeve jacket, a heat resistant surface capable of withstanding 1200°F (650°C) and a protective cage capable of surrounding the sample baskets during the cooling period.
G. Miscellaneous Equipment - this equipment should include: a pan larger than the sample baskets for transferring samples after ignition, spatulas, bowls, and wire brushes.

7.10.3 Sample

A. Obtain samples of aggregate in accordance with AASHTO T 2. Obtain samples of asphalt binder in accordance with AASHTO T 40. Obtain samples of freshly produced hot-mix asphalt in accordance with Section 7.5 of this Manual. If the mixture is not sufficiently soft to separate with a spatula or trowel, place it in a large flat pan in an oven at 257 ± 9°F (125 ± 5°C) until it is workable. Do not leave the sample in the oven for an extended period of time.
B. The size of the test sample shall be governed by the nominal maximum aggregate size of the mixture and shall conform to the weight requirements shown below. When the weight of the test specimen exceeds the capacity of the equipment used, the test specimen may be divided into suitable increments, tested, and the results appropriately combined for calculation of the asphalt binder content (weighted average). Specimen sizes shall not be more than 500 grams greater than the minimum recommended specimen weight.
Note: Large samples of fine mixes tend to result in incomplete ignition of the binder.

Nominal Maximum Aggregate Size (mm)	Minimum Weight Of Specimen (grams)
37.5	4000
25.0	3000
19.0	2000
12.5	1500
9.50	1200
4.75	1200

C. The following three calibration factor methods may be affected by the type of aggregate in the mixture. Accordingly, to optimize accuracy, one or more of the following procedures must be performed before any acceptance testing is performed. Procedure C3 shall be used to determine the mix calibration factor at mix design. The calibration factor should be indicated on the M&T 601 Form. During production, either of the three methods may be used. However, certain aggregate types may result in unusually high calibration factors (>0.5%) and erroneous gradation results due to aggregate breakdown. If either of these occurs during procedure C1 then procedure C2 shall be followed. If after that procedure is performed, it also gives a calibration factor of >0.5, or a significant gradation change occurs, procedure C3 shall be followed. If questions arise as to whether a significant gradation change has occurred, contact the Asphalt Laboratory.

C1. <u>Calibration Factors: Individual Aggregate Samples</u>

(1) Obtain individual aggregate samples in accordance with AASHTO T 2.
(2) Split sample according to AASHTO T 248.
(3) The size of the test sample shall conform to the weight requirement shown in Section 7.10.3(B).
(4) Samples must be preheated in a 257 ± 9°F (125 ± 5 °C) oven for a minimum of 25 minutes. Do not preheat the sample baskets.
(5) Perform aggregate gradation according to AASHTO T 27.
(Do **not** wash the sample).
(6.1) For the convection-type furnace, set the ignition oven temperature to 1072°F (578°C).
(6.2) For the direct IR irradiation-type furnace, set the ignition burn profile to OPTION 2.
(7) Set the calibration factor on the ignition furnace to 0.00 and ensure the printer is on.
(8) Weigh and record the weight of the two sample baskets and catch pan (with guards in place).
(9) Evenly distribute the aggregate in the sample baskets (do not place any aggregate on the catch pan). Ensure that the sample is level in the baskets.
(10) Weigh and record the total weight of the specimen, baskets, catch pan, and basket guards. Calculate and record the initial weight of the sample specimen.
(Sample specimen = total weight minus weight of the sample basket assembly)
(11) Input the initial weight of the sample specimen in whole grams into the ignition furnace.
(12) Place sample into ignition oven, close the door, and confirm that the sample weight (including basket) is correct.
(13) Press the Start button.
(14) Burn the aggregate sample for 40 minutes and then press Stop. Determine the percentage of burn loss from the printout of test.
(15) Perform an aggregate gradation according to AASHTO T 27 on samples immediately after allowing to cool to room temperature. Compare to the original gradation in C1.(5).
(16) Repeat this process for each aggregate in a mix.
(17) Multiply the percentage of each aggregate in the mix times the percentage of burn loss for each aggregate. Total these results for a calibration factor for that mix.
(18) Recycled Asphalt Pavement (RAP) will have an assumed calibration factor of 0.5%, unless prior test results confirm a different calibration factor.
(19) If the combined calibration factor is <0.5%, use that calibration factor. If the combined calibration factor is >0.5%, or if there is a significant gradation change in the aggregate, perform C2. below.
(20) Percentage of burn loss for individual aggregates shall be re-verified at least yearly.

Example for a RS9.5B mix

Aggregate %			% of Burn Loss		Results
78M Stone	30%	X	0.3%	=	0.09%
Dry Screenings	20%	X	0.4%	=	0.08%
Washed Screenings	35%	X	0.4%	=	0.14%
RAP	15%	X	0.5%	=	0.08%
	100%				0.39% Calibration Factor for RS9.5B mix

C2. Calibration Factors: Blended Aggregate Samples

(1) Prepare two blended aggregate samples. The size of the samples shall be in accordance with section 7.10.3(B).
(2) Individual aggregates used to prepare the blended aggregate samples shall be sampled from stockpiled material. The method used to combine the aggregates shall be the same procedure used during the mix design process.
(3) Samples must be preheated in a 257 ± 9℉ (125 ± 5 ℃) oven for a minimum of 25 minutes. Do not preheat the sample baskets.
(4) Allow the samples to cool and perform a gradation on one sample according to AASHTO T 27. (Do not wash the sample)
(5) Burn both samples for 40 minutes and determine the average percent burn loss in accordance with C1.(6) through C1.(14). If the difference between the two calibration factors exceeds 0.15%, repeat the process for two more blended aggregate samples. From the total of these four calibration factors, discard the high and the low, and average the remaining two factors.
(6) Perform aggregate gradation (AASHTO T 27) on one burnt sample that is being used in the average calibration factor. Compare this gradation to the gradation of the unburned “blank” specimen in C2.(4) to evaluate the amount of aggregate breakdown.
(7) If the final calibration factor is >0.5% or there is a significant gradation change, perform C3. below.

C3. Calibration Factors: Asphalt Mix Samples

(1) Prepare two calibration factor mix samples at the design asphalt binder content for the applicable mix.
(2) The size of the samples shall be in accordance with section 7.10.3(B).
(3) Prior to mixing, prepare a butter mix at the design binder content. The purpose of the butter mix is to condition the mixing bowl by providing a coating of asphalt binder and fines in the bowl. Mix and discard the butter mix prior to mixing any of the calibration factor mix specimens to ensure an accurate binder content. Aggregate used for the calibration factor specimens shall be sampled from stockpiled material. The method used to combine the aggregates shall be the same procedure used during the mix design process. In addition a “blank” blended aggregate specimen shall be batched and tested for aggregate gradation according to AASHTO T 30 Modified. The washed gradation shall fall within the individual test limits for that mix type.

(4) The freshly mixed specimens may be placed directly in the sample baskets. If allowed to cool, the samples must be preheated in a 257 ± 9°F (125 ± 5°C) o ven for a minimum of 25 minutes. Do not preheat the sample baskets.

(5) Burn mix samples at 1000°F (538°C) in accordance wi th 7.10.4 of this procedure.

(6) Perform a gradation analysis according to AASHTO T 30 Modified on the residual aggregate from one of the burnt samples. Compare this gradation to the gradation of the unburned, "blank" specimen to evaluate the amount of aggregate breakdown.

(7) Once all of the calibration factor specimens have been burned, determine the measured asphalt binder contents for each sample by calculation or from the printed tickets.

(8) If the difference between the measured asphalt binder contents of the two samples exceeds 0.15 percent, repeat the two tests and, from the four tests, discard the high and low results. Determine the calibration factor from the two remaining results. Calculate the difference between the actual and measured asphalt binder contents for each sample. The calibration factor is the average of the differences expressed in percent by weight of the HMA.

(9.1) For the convection-type furnace, if the calibration factor exceeds 1.0 percent, lower the test temperature to 900 ± 8°F (482 ± 5°C) and repeat test. Use the cal ibration factor obtained at 900 ± 8°F (482 ± 5°C) even if it exceeds 1.0 percent.

(9.2) For the direct IR irradiation-type furnace, the DEFAULT burn profile should be used for most materials. The operator may select burn-profile OPTION 1 or OPTION 2 to optimize the burn cycle. OPTION 1 is designed for samples that require a large aggregate calibration factor (greater than 1.0 percent) - typically very soft aggregate. OPTION 2 is designed for samples that may not burn completely using the DEFAULT burn profile.

(10.1) For the convection-type furnace, the temperature for testing HMA samples shall be the same temperature selected for testing calibration factor samples for the furnace being used.

(10.2) For the direct IR irradiation-type furnace, the burn profile for testing HMA samples shall be the same burn profile selected for testing calibration factor samples.

(11) The calibration factor shall be re-verified each time there is a change in the mix ingredients, design, or as required by the Engineer.

7.10.4 <u>Procedure</u>

A1. For the convection-type furnace, preheat the ignition furnace to 1000°F (538°C) or as determined in the calibration procedure.

A2. For the IR direct irradiation-type furnace, use the same burn profile as used during the calibration procedure.

B. Oven dry the HMA (if necessary), RAP or RAS sample to a constant weight at a temperature of 221 ± 9°F (105 ± 5°C) or determine the moisture content of the samples according to AASHTO T 110.

C. Enter the calibration factor for the specific mix to be tested.

D. Weigh and record the weight of the sample baskets and catch pan (with guards in place).

E. Prepare the sample as described in Section (B). Evenly distribute the sample in the sample baskets that have been placed in the catch pan, taking care to keep the material away from the edges of the baskets. Use a spatula or trowel to level the specimen.

F. Weigh and record the total weight of the sample, baskets, catch pan, and basket guards. Calculate and record the initial weight of the specimen (total weight - weight of the sample basket assembly).

G. Input the initial weight of the sample specimen in whole grams into the ignition furnace controller. Ensure that the correct weight has been entered.

H. Open the chamber door and place the sample baskets in the furnace. Close the chamber door and ensure that the sample weight (including the baskets) displayed on the furnace scale equals the total weight recorded in Section 7.10.1(G)(6) within ±5 grams. Differences greater than 5 grams or failure of the furnace scale to stabilize may indicate that the sample baskets are contacting the furnace wall. Initiate the test by pressing the start/stop button. This will lock the sample chamber door and start the combustion blower.

Note: The furnace temperature will drop below the set point when the door is opened, but will recover with the door closed and when ignition occurs. Sample ignition typically increases the temperature well above the set point, depending on sample size and asphalt binder content.

I. Allow the test to continue until the stable light and audible stable indicator indicate the test is complete (the change in weight does not exceed 0.01 percent for three consecutive minutes). Press the start/stop button. This will unlock the sample chamber and cause the printer to print out the test results.

Note: An ending weight loss percentage of 0.02 may be used with QA Supervisors approval when aggregates that exhibit an excessive amount of loss during ignition testing are used. The precision and bias statement was developed using 0.01 percent. Both precision and accuracy may be adversely effected by using 0.02.

J. Use the corrected asphalt binder content (%) from the printed ticket. If a moisture content has been determined, subtract the moisture content from the printed ticket corrected asphalt binder content and report the difference as the corrected asphalt binder content.

K. Open the chamber door, remove the sample baskets, and allow to cool to room temperature (approximately 30 minutes).

Note: The sample baskets should not be placed directly in front of any cooling source (fan, vent, exhaust, etc.) that could cause the loss of fines from the sample.

L. Gradation:
   a. Empty the contents of the baskets into a flat pan. Use a small wire sieve brush to ensure that any residual fines are removed from the baskets.
   b. Perform the gradation analysis according to AASHTO T 30 Modified.

7.10.5 Report

Always report the corrected asphalt binder content, calibration factor, temperature compensation factor (if applicable), total percent loss, sample weight, moisture content (if determined) and test temperature. Report all ignition furnace % binder and gradation result information on the QA/QC-1 or 1A Form. Also attach the entire original printed ticket from the ignition furnace to the QA/QC-1 or 1A Form.

7.11 SUPERPAVE GYRATORY COMPACTOR FIELD TEST PROCEDURE (AASHTO T 312 Modified)

This method is used to determine if the asphalt mixture actually being produced meets the requirements of the Specifications and/or if changes have occurred. This is one of the most important test the technician will conduct and is used in conjunction with the maximum specific gravity (G_{mm}) test to determine a density-voids (VTM) analysis of the mixture that is being produced. When checking VTM the mix is gyrated to the N_{des} number of gyrations. Also, a back calculation is performed to check $\%G_{mm}$ at N_{ini}.

The Superpave Gyratory Compactor field test procedure will be performed by the Contractor within each tonnage increment determined by the random sampling process and by the Department's test on split samples taken by the Contractor.

The JMF will give the targets for maximum specific gravity (G_{mm}), bulk specific gravity of the compacted mix (G_{mb}), and percent air voids in the total mix (VTM). Due to normal testing error, material variations, changes that occur in the plant, and other possible causes, deviations from the established JMF values may occur. Therefore, occasional changes in the JMF values will need to be made based on the results obtained from QC/QA test data on actual mix production.

7.11.1 General

The following guidelines and tolerances will be utilized when comparing field bulk specific gravity of the compacted mix (G_{mb}), the field maximum specific gravity (G_{mm}), and the field VTM with JMF values to determine compliance and/or if a new JMF is needed.

A. A combined gradation (AASHTO T 30 Modified), binder content test (AASHTO T 308 Modified) and maximum specific gravity (AASHTO T 209 Modified or ASTM 2041 Modified or ASTM D 6857) will be performed in conjunction with the Superpave Gyratory Compactor field test.
B. VTM which is determined by use of the Superpave Gyratory Compactor field test (G_{mb}) and maximum specific gravity test (G_{mm}) is subject to a ±2.0% Individual Test Control Limit against the JMF target VTM. (Refer to Subarticle 609-6(D).
C. All Superpave Gyratory specimens will be tested utilizing the 150 mm Superpave Gyratory Compactor test method.
D. Height, pressure, and external angle calibrations are <u>required</u> to be performed <u>prior to initially using the Gyratory Compactor.</u> Periodic calibrations for height, pressure, internal angle and rotation shall be performed at minimum frequencies specified in Section 7.2.2.

7.11.2 Equipment

A. Superpave Gyratory Compactor - An electrohydraulic or electromechanical compactor with a ram and ram heads as described in Section 4.3. The axis of the ram shall be perpendicular to the platen of the compactor. The ram shall apply and maintain a pressure of 600 ± 18 kPa perpendicular to the cylindrical axis of the specimen during compaction. The compactor shall tilt the specimen molds at an average internal angle of 1.16 ± 0.02° (20.2 ± 0.35 mrad), determined in accordance with AASHTO PP 48. The compactor shall gyrate the specimen molds at a rate of 30.0 ± 0.5 gyrations per minute throughout compaction.
B. Specimen Height Measurement and Recording Device - When specimen density is to be monitored during compaction, a means shall be provided to continuously measure and record the height of the specimen to the nearest 0.1 mm during compaction once per gyration.

C. Specimen Molds - Specimen molds shall have steel walls that are at least 7.5 mm thick and are hardened to at least a Rockwell hardness of C48. The initial inside finish of the molds shall have a root mean square (rms) of 1.60 µm or smoother. The average inside diameter of new molds shall be 149.90 mm to 150.00 mm (measured at room temperature). If any mold in service exceeds 150.20 mm, it shall be taken out of service and replaced.

D. Ram Heads and Mold Bottoms - Ram heads and mold bottoms shall be fabricated from steel with a minimum Rockwell hardness of C48. The ram heads shall stay perpendicular to their axis. The platen side of each mold bottom shall be flat and parallel to its face. All ram and base plate faces (the sides presented to the specimen) shall be flat to meet the smoothness requirement in Section 4.2 and shall have a diameter of 149.50 to 149.75 mm.

E. Thermometers - Armored, glass, or dial-type thermometers with metal stems for determining the temperature of aggregates, binder, and HMA between 10 and 232℃.

F. Balance - A balance meeting the requirements of M 231, Class G 5, for determining the weight of aggregates, binder, and HMA.

G. Oven - A forced-draft oven, thermostatically controlled, capable of maintaining any desired temperature setting from room temperature to 350℉ (176℃) within ±5℉ (±3℃), for heating aggregates, binder, HMA, and equipment as required. The oven shall be capable of maintaining the temperature required for mixture conditioning in accordance with R 30.

H. Miscellaneous Items - Flat-bottom metal pans for heating aggregates, scoop for batching aggregates, containers (grill-type tins, beakers, containers for heating asphalt), large mixing spoon or small trowel, large spatula, gloves for handling hot equipment, paper disks, mechanical mixer (optional), lubricating materials recommended by the compactor manufacturer.

7.11.3 <u>Sample</u>

A. Mix and quarter the sample material as described in “Reduction Of Samples To Testing Size”, in Section 7.5.6 of this Manual. Weigh out the appropriate amount of mix to produce a compacted specimen height of 115 ± 5 mm at the desired number of gyrations. In order to determine the approximate weight of uncompacted mix, the following formula may be used:

$$\left[\left(\frac{\pi d^2}{4}\right) h \times G_{mm} \times 0.96\right] \div 1000$$

Note: This formula will give a weight, which is an estimate only. If it does not produce the proper specimen height, trial and error should be then performed to determine the desired target weight for the proper height (115 ± 5 mm).

A. If necessary, heat the 3 pans of mix until the mix reaches a field mix compaction temperature recommended for the binder type. The gyratory compaction temperature for Superpave mixes is as follows:

[If the temperature of the mix is at or above this compaction temperature, it is not necessary to put the mix in an oven since there is no curing time required.]

Mixes Using Binder Grade	Compaction Temperature
PG 58-28 & PG 64-22	290° F ± 5° F
PG 70-22	305° F ± 5° F
PG 76-22	315° F ± 5° F

Note: Mixing and Compaction temperatures are based on the specified PG binder grade for each mix type in Table 610-3. When using RAP or RAS with a different binder than specified, **use mixing and compaction temperatures based on the original binder grade for that mix type shown in Table 610-3.**

Where WMA is used, the compaction temperature is **10 °F lower** than the Mixing Temperature shown on the JMF.

7.11.4 Procedure

A. Place three (3) 150 mm Gyratory mold assemblies in an oven at the required compaction temperature for a minimum of 30 minutes prior to estimated beginning of compaction.
B. Ensure that the settings on the compactor are as required by the specific JMF.
C. Once the compaction temperature is achieved, remove a heated mold assembly from the oven. Place a paper specimen protection disc in the bottom of the heated gyratory compaction mold.
D. Place the mixture into the mold in one lift. Care should be taken to avoid segregation in the mold. After all the mix is in the mold, level the mix and measure the temperature of the mix in the mold by placing a thermometer in the center of the specimen. Once the temperature is at the mix compaction temperature recommended for the binder type, place a specimen protection disc on top of the leveled material and place the mold assembly with mix into the Gyratory compactor and gyrate the number of N_{des} gyrations given on the JMF. If the mix is too hot, allow sufficient time for it to cool to above the specified range before compacting.
E. Place the mold assembly with mix into the Gyratory compactor and apply 600 ± 18 kPa of pressure to the mixture and introduce the 1.16 ± 0.02° average internal angle. Gyrate to the specified N_{des} number of gyrations, which is given on the JMF.
F. Procedures outlined in steps C. through E. should be done as quickly as possible as to not allow the mix to cool below the required temperature for that type Binder being compacted.
G. When the compaction is complete, remove the compaction angle and raise the gyratory ram. Remove the mold assembly from the gyratory compactor.
H. Extrude the specimen from the mold assembly. Most mixes can be extruded immediately after compaction, however, some mix types may need a cooling period of 5 - 10 minutes before complete extrusion of the specimen, to insure the specimens are not damaged.
I. Remove the specimen protection discs. It is important to remove the paper specimen protection discs as soon as possible, because removal is difficult after the specimens have cooled.
J. Place the three specimens in front of a cooling fan until they cool to room temperature of 77 ± 9°F (25 ± 5°C). It is helpful to set the specimen in front of th e fan on some type material that absorbs heat (such as concrete).
K. Identify each sample by marking with the appropriate QC sample number and proper suffix (i.e. 02-1a, 02-1b, and 02-1c).
L. Determine bulk specific gravity (G_{mb}) using AASHTO T 166 or AASHTO T 331.

M. Determine the void content (VTM) of each specimen using the bulk lab specific gravity (G_{mb}) of each specimen and the actual maximum specific gravity (G_{mm}) determined from the maximum specific gravity using the formula given below and record the results.

$$\%VTM @ N_{des} = \frac{G_{mm} - G_{mb} @ N_{des}}{G_{mm}} \times 100$$

N. Determine the average gyratory bulk specific gravity (G_{mb}) and void content (VTM) for the three specimens. Discard an individual Gyratory bulk specific gravity that deviates more than ±0.015 from the average and recalculate the average, based on the remaining two specimens. If more than one-value deviates by more than ±0.015, the entire set of results are considered suspect and a new set of specimens must be made and tested.

7.11.5 Report

Report the entire test results of each gyratory specimen at both N_{ini} and N_{des} on the QA/QC-1 Form. Report results to the following significant decimals:

Height	=	0.1 mm
Weight	=	0.1 gram
Specific Gravity	=	0.001
VTM	=	0.1 %
VMA	=	0.1 %
VFA	=	1 %
$\%G_{mm}$ @ N_{ini}	=	0.1%

7.12 MAXIMUM SPECIFIC GRAVITY (G_{mm}) OF ASPHALT PAVING MIXTURES (AASHTO T 209 Modified, ASTM D 2041 Modified or ASTM D 6857)

This procedure is used to determine the maximum specific gravity (G_{mm}) of uncompacted asphalt paving mixtures. This procedure determines the specific gravity of a "voidless" mixture of the aggregate and asphalt binder. The maximum specific gravity procedure may be performed on either a loose sample of the mix or on previously compacted mixture, which has been reheated and broken apart to facilitate removal of trapped air in the mixture.

7.12.1 General

A. The most important reason for knowing the maximum specific gravity of a paving mixture is to aid in calculating the percentage of air voids (VTM) in lab compacted specimens and/or in the final compacted mixture. As was explained in Section 3, Mix Design, asphalt pavements must include a certain percentage (by volume) of air spaces or voids. These spaces perform important functions and are significantly related to the performance and service life of the completed pavement.

B. Maximum specific gravity tests will be performed by both the Contractor and the Department on all full test series mix samples. This procedure will be performed in conjunction with Gyratory testing on all asphalt mixes, along with binder content and washed gradation analysis. (An example of the maximum specific gravity determination worksheet is illustrated in Section 12).

7.12.2 Procedure

Two procedures are outlined here:

1) In the Rice Test method (AASHTO T 209 Modified, ASTM D 2041 Modified), dry, loose mix is placed in a vacuum container (bowl, pot, or flask) and covered with water. A vacuum is then applied to reduce the residual pressure in the vacuum container and remove entrapped air from the mixture. After the vacuum is released, the sample and container are immersed in a water bath and the volume of the mix sample is determined. From the weight-volume relationship, the maximum specific gravity of the asphalt mixture can be calculated.
2) In the Vacuum Sealing Method (ASTM D 6857), dry, loose mix is placed inside a plastic bag which is then placed inside a second plastic bag. The double-bagged sample is placed into a vacuum chamber which automatically seals the plastic bag with the sample inside. The bags are then removed from the vacuum chamber and placed into a large water tank equipped with a balance for weighing the sample under water. The bags are then cut open to allow water to enter the bag and surround the sample. The underwater weight of the mixture can be measured and from the weight-volume relationship, the maximum specific gravity of the asphalt mixture can be calculated.

7.12.2(a) Standard Test Method for Theoretical Maximum Specific Gravity and Density of Asphalt Paving Mixtures (AASHTO T 209 Modified & ASTM D 2041 Modified)

A. Equipment

(1) Vacuum Container (may be one of the following):

(a) Vacuum Bowl - a metal or plastic pot or bowl with a diameter of approximately 7 to 10.25 in. (180 to 260 mm) and a bowl height of at least 6.3 in. (160 mm) shall be equipped with a transparent cover fitted with a rubber gasket and connections for the vacuum lines. Both the bowl and cover should be sufficiently stiff to withstand the applied vacuum pressure without visibly deforming. The hose connections shall be covered with a small piece of fine wire mesh to minimize the loss of any fine material.

(b) Vacuum Flask - a thick-walled volumetric glass flask with a capacity of approximately 4000 ml, fitted with a rubber stopper with a connection for the vacuum line. The hose connection in the flask should be covered with a small piece of fine wire mesh to minimize the loss of any fine material.

(2) Balance - capable of being read to the nearest 0.1 gram. For the pot or bowl method, the balance shall be equipped with a suitable apparatus and holder to permit weighing the sample while suspended below the balance. The wire suspending the holder should be the smallest practical size to minimize any possible effects of a variable immersed length.

(3) Vacuum Pump or Water Aspirator - capable of evacuating air from the vacuum container to a residual pressure of 30 mm of Hg (4.0 kPa) or less. A suitable trap shall be installed between the vacuum vessel and vacuum source to reduce the amount of water vapor entering the vacuum pump.

(4) Residual Pressure Manometer or vacuum gage – traceable to NIST (mandatory) to be connected directly to the vacuum vessel and to be capable of measuring residual pressure down to 30 mm of Hg (4.0 kPa) or less. It is to be connected at the end of the vacuum line using an appropriate tube and either a “T” connector on the top of the container or by using a separate opening (from the vacuum line) in the top of the container to attach the hose.

(5) Vacuum Gauge or Manometer - suitable for measuring the vacuum being applied at the source of the vacuum. This device can be connected directly to the vacuum source or be in the vacuum line close to the source. This is required to check the reading given by the residual pressure manometer attached directly to the vacuum vessel.

(6) Thermometers - calibrated liquid-in-glass thermometers of suitable range with subdivisions and maximum scale error of 0.9℉ (0.5℃), or any other the rmometric device of equal accuracy, precision, and sensitivity shall be used. Thermometers shall conform to the requirements of Specification ASTM E 1.

(7) Water Bath - capable of maintaining a constant temperature of 77 ± 2℉ (25 ± 1℃). The water bath must be large enough for entirely immersing the suspended vacuum container and equipped with an overflow outlet for maintaining a constant water level.

(8) Bleeder Valve - attached to the vacuum train to facilitate both the adjustment of the vacuum being applied to the vacuum vessel and the slow release of vacuum pressure.

(9) Mechanical Agitation Device - capable of applying a gentle but consistent agitation of the sample. This device shall be equipped with a means of firmly anchoring the container so that it does not move on the surface of the device. Additionally, the device must be equipped with an electric timer with a minimum 15-minute capacity.

(10) Oven - an oven of appropriate size, capable of maintaining a uniform temperature of 230 ± 9°F (110 ± 5°C).

(11) Miscellaneous Items - pans of sufficient size for heating and cooling samples; spatulas and/or scoops for transferring mix samples.

B. <u>Sample</u>

(1) Mix, quarter and select sample as described in "Reduction of Samples to Testing Size", in Section 7.5.6 of this Manual. The size of the test sample shall be governed by the nominal maximum aggregate size of the mixture and shall conform to the weight requirements shown below. Sample size shall not be more than 200 grams greater than the minimum recommended sample weight. Weigh mix into an appropriately-sized container.

Nominal Maximum Aggregate Size	Minimum Weight Of Sample
25.0 mm	2500 grams
19.0 mm	2500 grams
12.5 mm	1500 grams
9.50 mm	1500 grams
4.75 mm	1500 grams

(2) Plant-produced samples need to be dried to a constant weight (weight repeats within 0.1% for consecutive 15-minute weighing intervals) at a temperature of 221 ± 9°F (105 ± 5°C).

C. <u>Procedure</u>

(1) Spread the mix uniformly in a large flat pan. Thoroughly break up the mix using care not to fracture the mineral particles, so that the particles of the fine aggregate portion are not larger than 1/4 inch (6.3 mm).

(2) Cool the sample to room temperature of 77 ± 9°F (25 ± 5°C) [a portable electric fan can be used to speed the cooling process – however, care should be taken with airflow to prevent the loss of fines]. Place the entire amount of the sample in the appropriate container (bowl, pot, or flask) and weigh. Add water at 77°F (25°C) until the sample is covered completely.

(3) Remove entrapped air by subjecting the contents of the container to a partial vacuum of 27.5 ± 2.5 mm Hg (3.7 ± 0.3 kPa), absolute pressure for 15 ± 2 minutes. The residual pressure of the container shall be measured by a manometer attached independently to the container. The container and contents shall be continuously shaken by a mechanical device in order to assist the removal of air bubbles.

(4) Gradually release the vacuum pressure using the bleeder valve and proceed with one of the following determinations:

(a) <u>Bowl or Pot</u> - Suspend the bowl or pot and contents (without the lid) in 77°F (25°C) water for 10 ± 1 minutes. Maintain the water temperature at 77 ± 2°F (25 ± 1°C) by adding hot or cold water, or more preferably by using a small submergible heater. Record the weight of the suspended sample.

(b) <u>Flask</u> - Place the flask and contents in a 77 ± 2°F (25 ± 1°C) water bath for 10 ± 1 minutes. Remove and fill the flask to "fill line" with water at 77 ± 2°F (25 ± 1°C). Record the weight of the filled flask.

(5) Calculate the maximum specific gravity (G_{mm}) of the test sample to three decimal places (x.xxx).

$$G_{mm} = \frac{A}{A - C}$$

where, A = weight of oven-dry sample in air, grams
C = weight of sample in water after vacuum, grams

Note: For all mixes containing any aggregate having a water absorption of greater than 1.5%, the following dryback procedure must also be performed. The Department reserves the right to require a dryback procedure for any maximum specific gravity test. For a listing of quarries requiring the dryback procedure, contact the Materials and Tests Unit Asphalt Laboratory at (919) 329-4060.

<u>Dryback Procedure</u>

(6) Drain the water from the sample. To prevent loss of fine particles, decant the water through a towel held over the top of the container or a 0.075 mm sieve.

(7) Spread the sample in a tared pan in front of an electric fan to speed evaporation and remove surface moisture. The dryback pan may be lined with newspaper to speed up moisture removal. After the pan is visibly dry, begin weighing it at 15-minute intervals, and when the loss in weight is less than 0.05% for this interval, the sample may be considered to be surface dry. The procedure shall be accompanied by intermittent stirring of the sample. Conglomerations of mix shall be broken up by hand. Care must be taken to prevent loss of particles of mix.

(8) Calculate the maximum specific gravity (G_{mm}) of the test sample to three decimal places (x.xxx).

$$G_{mm} = \frac{A}{B - C}$$

where, A = weight of oven-dry sample in air, grams
B = weight of surface dry sample in air after vacuum & dryback, grams
C = weight of sample in water after vacuum, grams

D. <u>Report</u>

Maximum Specific Gravity results should be determined using the QA/QC-2 Form. If the Dryback Procedure is required, report the Rice Dryback Correction Factor data on the QA/QC-4 Form. Report the final Maximum Specific Gravity value (G_{mm}) on the QA/QC-1 Form.

7.12.2(b) Standard Test Method for Theoretical Maximum Specific Gravity and Density of Asphalt Paving Mixtures Using Vacuum Sealing Method (ASTM D 6857)

A. Equipment

(1) Balance - capable of being read to the nearest 0.1 gram. The balance shall be equipped with a suitable apparatus and holder to permit weighing the sample while suspended below the balance. The wire suspending the holder should be the smallest practical size to minimize any possible effects of a variable immersed length.

(2) Water Bath - with minimum dimensions to accommodate completely submerging the specimen in water while suspended and equipped with an overflow outlet for maintaining a constant water level.

(3) Vacuum Chamber - with a minimum 1.25 hp (0.93 kW) pump capable of evacuating a sealed and enclosed chamber to 5.6 mm Hg. The chamber shall be large enough to seal samples as large as 2200 grams. The device shall automatically seal the plastic bag and exhaust air back into the chamber in a controlled manner to ensure proper conformance of the plastic to the asphalt mixture. The air exhaust and vacuum operation time should be calibrated at the factory prior to initial use. The air exhaust system should be calibrated to bring the chamber to atmospheric pressure in 80 to 150 seconds after the completion of the vacuum operation. The vacuum system should be provided with a latch to control the chamber door opening.

(4) Absolute Vacuum Measurement Gage - a gage independent of the vacuum sealing device which can be placed directly inside the chamber to verify vacuum performance and the chamber door sealing condition of the unit. The gage shall be capable of reading pressure to 3 mm Hg (3 TORR).

(5) Plastic Bags - Internal Bags shall have random channels built into at least one side to aid in evacuating all air from the sample. The internal bags shall have a minimum opening of 12 in. (305 mm) and maximum opening of 13.5 in. (340 mm). The External Bags shall have a minimum opening of 14.75 in. (375 mm) and a maximum opening of 15.5 in. (394 mm). Each bag shall be of material that will not adhere to asphalt film, puncture resistant, and impermeable to air. The bags shall have a minimum thickness of 0.004 in. (0.100 mm) and maximum thickness of 0.006 in. (0.152 mm). The combined apparent specific gravity of the two bags shall be provided by the manufacturer.

Note: Care should be taken to protect the bags during storage. Refer to the manufacturer's procedures for safe handling and storage of bags.

(6) Holder - for water displacement of the sample having no sharp edges.

(7) Filler Plates - to position the sample and the bags in the same plane as the sealing bar.

(8) Bag Cutting Knife or scissors - for opening bags during testing.

(9) Thermometers - calibrated liquid-in-glass thermometers of suitable range with subdivisions and maximum scale error of 0.9°F (0.5°C), or any other the rmometric device of equal accuracy, precision, and sensitivity shall be used. Thermometers shall conform to the requirements of Specification ASTM E 1.

B. Sample

(1) Mix, quarter and select sample as described in "Reduction of Samples to Testing Size", in Section 7.5.6 of this Manual. The size of the test sample shall be governed by the nominal maximum aggregate size of the mixture and shall conform to the weight requirements shown below. Sample size shall not be more than 200 grams greater than the minimum recommended sample weight.

Nominal Maximum Aggregate Size	Minimum Weight Of Sample
25.0 mm	2000 grams
19.0 mm	2000 grams
12.5 mm	1500 grams
9.50 mm	1500 grams
4.75 mm	1500 grams

(2) For plant produced mix, samples need to be dried to a constant weight (weight repeats within 0.1% for consecutive 15-minute weighings) at a temperature of 221 ± 9℉ (105 ± 5℃).

C. Procedure

(1) Spread the mix uniformly in a large flat pan. Thoroughly break up the mix using care not to fracture the mineral particles, so that the particles of the fine aggregate portion are not larger than 1/4 inch (6.3 mm).

(2) Cool the sample to room temperature of 77 ± 9℉ (25 ± 5℃) [a portable electric fan can be used to speed the cooling process – however, care should be taken with airflow to prevent the loss of fines]. Record the weight of the dry specimen in air.

(3) Set the vacuum sealing machine according to the manufacturer's recommendation to create at least a 5.6 mm Hg absolute pressure inside the chamber.
Note: For asphalt mixtures that contain polymers, follow the manufacturer's recommendations.

(4) If after examining the bags there are no punctures or cuts, weigh one internal and one external bag.

(5) Record the combined weight of the two bags.

(6) Place the entire sample in the internal bag. Ensure that none of the sample is lost during this transfer.

(7) Place the empty external bag inside the vacuum chamber.

(8) Place the internal bag containing the sample with the channel side (rough side) down into the external bag. The rough side is placed under the sample to protect against trapped air and to help in the evacuation of the air from the bag.

(9) Spread the sample so that it is evenly distributed within the internal bag. Do not spread the sample by squeezing down on the sample from outside the bag.

(10) Push in the opening of the internal bag away from the opening of the external bag to prevent the opening of the internal bag from being sealed. Make sure that the opening of the internal bag is flat and that the opening is not restricted by a fold in the bag.

(11) Place the opening of the external bag over the seal bar, making sure the internal bag is not over the seal bar.

(12) Close the chamber door.

(13) Allow the vacuum chamber to remove the air from the chamber and the plastic bag. The vacuum chamber shall automatically seal the bag once the air is removed.

(14) Exhaust air into the chamber until the chamber door opens indicating atmospheric pressure within the chamber. The chamber door latch can be used to avoid automatic opening of the door after completion of the test.

(15) Remove the sealed sample from the vacuum chamber. Perform a visual inspection of the bag and listen for any leaks.

Note: While transferring the sample to the water bath, handle the sealed sample with extreme care. Avoid any impacts with hard surfaces that could cause leaks in the bag and allow air to enter the sample.

(16) Immediately transfer the sample to the water bath at 77 ± 2°F (25 ± 1°C) equipped with a scale.

(17) Submerge the sealed bag containing the sample completely under water and cut open the external bag all the way across the top, leaving approximately 1 in. (25 mm) intact. When cutting the bag, make certain the sealed portion of the bag is at least 2 in. (50 mm) under water and remains under water throughout the entire process.

(18) Open both bags with your fingers and hold open for 10 to 15 seconds to allow the water to flow in the bags.

(19) Secure the sample over a suspended scale and allow the weight to stabilize. Make certain the bags or the suspension equipment is not contacting the sides or the bottom of the water tank and that no part of the plastic bag is breaking the water surface at any time.

(20) Allow the scales to stabilize, and record the weight of the mix and bags underwater.

(21) Calculate maximum specific gravity (G_{mm}) of test sample to three decimal places (x.xxx).

C. Report

Maximum Specific Gravity data may be recorded on the manufacturer's data collection table or similar form. Report the final Maximum Specific Gravity value (G_{mm}) on the QA/QC-1A Form.

7.13 BULK SPECIFIC GRAVITY OF COMPACTED ASPHALT MIXTURES (AASHTO T 166 or ASTM D 6752)

This test procedure is used to determine the bulk specific gravity (G_{mb}) of compacted asphalt mixtures, including either Roadway cored samples, Gyratory specimens or other compacted specimens. The bulk specific gravity of Gyratory specimens is used in the density-voids analysis in the mix design process and in field testing of the mixture. The specific gravity of cored pavement samples is used for comparison with the Density Control Specific Gravity (G_{mm}) for density compliance purposes.

7.13.1 General

Two procedures are outlined here:

- In the Saturated Surface-Dry Specimen method (AASHTO T 166), a compacted specimen is manually weighed in air, under water, and at the saturated surface-dry condition to determine the specimen's bulk specific gravity (G_{mb}). If testing OGAFC or other permeable asphalt mixes with interconnected voids, ASTM D 6752 should be used to determine bulk specific gravity.
- In the Vacuum Sealing Method (ASTM D 6752), a compacted specimen is placed inside a plastic bag which is then automatically sealed in a vacuum chamber. The sealed bag can then be placed into a large water tank equipped with a balance for weighing the sample under water. From this weight-volume relationship, the bulk specific gravity of the specimen can be calculated.

7.13.2 Bulk Specific Gravity of Compacted Hot-Mix Asphalt Using Saturated Surface-Dry Specimens (AASHTO T 166)

A. Equipment

(1) Balance - capable of being read to the nearest 0.1 gram and equipped such that an apparatus can be suspended from the center of scale pan.

(2) Suspension Apparatus - the balance shall be equipped with a suitable apparatus and holder to permit weighing the sample while suspended below the balance. The wire suspending the holder should be the smallest practical size to minimize any possible effects of a variable immersed length. The suspension apparatus shall be constructed to enable the container to be immersed to a depth sufficient to cover it and the test sample during weighing. Care should be exercised to ensure no trapped air bubbles exist under the specimen.

(3) Thermometers - calibrated liquid-in-glass thermometers of suitable range with subdivisions and maximum scale error of 0.9°F (0.5°C), or any othe r thermometric device of equal accuracy, precision, and sensitivity shall be used. Thermometers shall conform to the requirements of Specification ASTM E 1.

(4) Water Tank - for immersing the specimen in water while suspended under the weighing device, equipped with an overflow outlet for maintaining a constant water level.

B. Sample

(1) Test specimens may be either laboratory molded from hot asphalt mixtures or cored samples from compacted roadway pavement.

(2) Samples taken from the compacted pavement shall have a minimum diameter of 6 in. (150 mm).

(3) Specimens shall be free from foreign materials such as seal coat, tack coat, foundation material, soil, etc.

(4) If needed, specimens may be separated from other pavement layers by sawing or other suitable means. Care should be exercised to ensure sawing does not damage the specimens.

C. Methods of Drying

(1) Laboratory Molded Specimen – recently compacted specimens which have not been exposed to moisture do not require drying. Cool the specimens to room temperature of 77 ± 9°F (25 ± 5°C) prior to testing.

(2) Cored Samples – use one of the following drying methods:

(a) Oven Drying: Samples saturated with water shall initially be dried to a constant weight in an oven overnight at 125 ± 5°F (52 ± 3°C) and then weighed at 2-hour drying intervals. Constant weight is defined as the weight at which further drying does not alter the weight by more than 0.05 percent when weighed at 2-hour intervals.

(b) Core-Drying Apparatus: This method can be used to determine moisture content and amount of water loss during drying by weighing the sample before and after the drying operations. Record the weight of the specimen and place in the apparatus. Run one cycle to completion, remove specimen, and re-weigh. Calculate the water loss. Continue the drying process using additional cycles as needed to achieve constant weight. Constant weight is defined as the weight at which further drying does not alter the weight by more than 0.05 percent when weighed after at least two drying cycles.

D. Procedure

(1) Weigh and record the specimen dry weight at room temperature of 77 ± 9°F (25 ± 5°C) **(A)**.

(2) Suspend each specimen in water at 77 ± 2°F (25 ± 1°C) for 4 ± 1 minutes and record the immersed weight **(C)**.

(3) Remove the specimen from the water, surface dry by blotting with a damp cloth towel as quickly as possible, and determine the surface-dry weight **(B)**.

Note: Completely immerse entire towel in water and wring out. Damp is considered to be when no water can be wrung from the towel.
Each specimen shall be immersed and weighed individually.
If desired, the sequence of testing operations may be changed to expedite the test results.

(4) Calculate the specimen bulk gravity (G_{mb}) of the test specimen as follows:

$$G_{mb} = \frac{A}{B - C}$$

where, A = weight of the dry specimen in air, grams
B = weight of the saturated surface-dry specimen, grams
C = weight of the specimen in water, grams

E. Report

Report the Bulk Specific Gravity (G_{mb}) of laboratory-molded samples on Form QA/QC-1.
Report the Bulk Specific Gravity (G_{mb}) of cored samples on form QA/QC-5.

7.13.3 Bulk Specific Gravity of Compacted Hot-Mix Asphalt Using Automatic Vacuum Sealing Method (ASTM D 6752)

A. Equipment

(1) Balance - capable of being read to the nearest 0.1 gram. The balance shall be equipped with a suitable apparatus and holder to permit weighing the sample while suspended below the balance. The wire suspending the holder should be the smallest practical size to minimize any possible effects of a variable immersed length.

(2) Water Tank - with minimum dimensions to accommodate completely submerging the specimen in water while suspended and equipped with an overflow outlet for maintaining a constant water level.

(3) Vacuum Chamber - with a minimum 1.25 hp (0.93 kW) pump capable of evacuating a sealed and enclosed chamber to a minimum pressure of 10 mm Hg in less than 60 s, when at sea level. The chamber shall be large enough to seal samples of 150 mm wide by 350 mm long by 150 mm thick. The device shall automatically seal the plastic bag and exhaust air back into the chamber in a controlled manner to ensure proper conformance of the plastic to the asphalt specimen. The air exhaust and vacuum operation time should be calibrated at the factory prior to initial use. The air exhaust system should be calibrated to bring the chamber to atmospheric pressure in 80 to 120 s, after the completion of the vacuum operation. The vacuum system should be provided with a latch to control the chamber door opening.

(4) Absolute Vacuum Measurement Gage - a gage independent of the vacuum sealing device which can be placed directly inside the chamber to verify vacuum performance and the chamber door sealing condition of the unit. The gage shall be capable of reading pressure to 3 mm Hg (3 TORR).

(5) Plastic Bags - bags used with the vacuum device shall be one of the two following sizes. The smaller bags shall have a minimum opening of 9.25 in. (235 mm) and maximum opening of 10.25 in. (260 mm) and the larger bags shall have a minimum of 14.75 in. (375 mm) and a maximum opening of 15.5 in. (394 mm). The bags shall be of plastic material that will not adhere to asphalt film, is puncture resistant, capable of withstanding sample temperatures of up to 70℃, is impermeable to water, containing no air channels for evacuation of air from the bag. The bags shall have a minimum thickness of 0.004 in. (0.100 mm) and maximum thickness of 0.006 in. (0.152 mm). The apparent specific gravity for the bags shall be provided by the manufacturer for each bag shipment. The apparent specific gravity provided for each size bag shall account for the different sample weights and bag weight used during testing.

Note: Care should be taken to protect the bags during storage. Refer to the manufacturer's procedures for safe handling and storage of bags.

(6) Holder - for water displacement of the sample having no sharp edges.

(7) Specimen Sliding Plate - used within the chamber for reduction of friction on the plastic bags.

(8) Bag Cutting Knife or Scissors - for opening bags during testing.

(9) Thermometers - calibrated liquid-in-glass thermometers of suitable range with subdivisions and maximum scale error of 0.9℉ (0.5℃), or any other thermometric device of equal accuracy, precision, and sensitivity shall be used. Thermometers shall conform to the requirements of Specification ASTM E 1.

B. Sample

(1) Test specimens may be either laboratory molded from hot asphalt mixtures or cored samples from compacted roadway pavement.

(2) Samples taken from the compacted pavement shall have a minimum diameter of 6" (150 mm).

(3) Specimens shall be free from foreign materials such as seal coat, tack coat, foundation material, soil, etc.

(4) If needed, specimens may be separated from other pavement layers by sawing or other suitable means. Care should be exercised to ensure sawing does not damage the specimens.

C. Methods of Drying

(1) Laboratory Molded Specimen – recently compacted specimens which have not been exposed to moisture do not require drying. Cool the specimens to room temperature of 77 ± 9°F (25 ± 5°C) prior to testing.

(2) Cored Samples – use one of the following drying methods:

(a) Oven Drying: Samples saturated with water shall initially be dried to a constant weight in an oven overnight at 125 ± 5°F (52 ± 3°C) and then weighed at 2-hour drying intervals. Constant weight is defined as the weight at which further drying does not alter the weight by more than 0.05 percent when weighed at 2-hour intervals.

(b) Core-Drying Apparatus: This method can be used to determine moisture content and amount of water loss during drying by weighing the sample before and after the drying operations. Record the weight of the specimen and place in the apparatus. Run one cycle to completion, remove specimen, and re-weigh. Calculate the water loss. Continue the drying process using additional cycles as needed to achieve constant weight. Constant weight is defined as the weight at which further drying does not alter the weight by more than 0.05 percent when weighed after at least two drying cycles.

D. Procedure

(1) Weigh and record the specimen dry weight at room temperature of 77 ± 9°F (25 ± 5°C) .

(2) Select an appropriate size bag. For samples with 6 in. (150 mm) diameter and less than 2 in. (50 mm) thickness, use the bag with smaller opening size as specified in (A-5) above. For 6 in. (150 mm) samples with greater than 2 in. (50 mm) thickness, use the larger opening size bags as specified in (A-5) above. For samples that weigh more than 5500 grams or abnormally shaped samples, use the manufacturer's recommendation for appropriate bag size and configuration.

(3) Inspect an appropriate size bag for holes or irregularities, record the bag weight and place a bag inside the vacuum chamber on top of the specimen sliding plate.

(4) Gently open the bag and place the specimen in the plastic bag on top of the specimen sliding plate, being careful to handle the bag in such a manner that would prevent a puncture. Avoid dropping or impacting the bag, and follow manufacturer's recommendations for handling the specimens and the bags.

(5) Allow the vacuum chamber to remove the air from the chamber and the plastic bag. The vacuum chamber shall automatically seal the bag once the air is removed.

(6) Exhaust air into the chamber until the chamber door opens indicating atmospheric pressure within the chamber. The chamber door latch can be used to avoid automatic opening of the door after completion of the test.

(7) Remove the sealed sample from the vacuum chamber. Handle the sealed sample with extreme care to prevent puncturing the bag. Gently pull on the bag and if the bag easily separates from the sample, the bag may be punctured; repeat the sealing process with a new bag.

(8) Determine the weight of the sealed specimen in air by summing the weight in (1) & (3) above.

(9) Suspend each specimen in water at 77 ± 2°F (25 ± 1°C) and record the immersed weight.

(10) To ensure that there was a tight seal in the bag, remove the sample from the water and cut the bag open. Remove the sample from the bag and determine its weight. Compare this weight with the initial dry weight in (1) above. If the final weight of the specimen after removal from the sealed bag is greater than the weight of the dry specimen in air by 5 grams, then dry and retest the sample. Otherwise, continue with the calculation step.

(11) Calculate the specimen bulk gravity (G_{mb}) of the test specimen to three decimal places (x.xxx).

E. Report

Report the Bulk Specific Gravity (G_{mb}) of laboratory-molded samples on Form QA/QC-1A.

Report the Bulk Specific Gravity (G_{mb}) of cored samples on form QA/QC-5.

7.14 TENSILE STRENGTH RATIO (TSR) TEST (AASHTO T 283 MODIFIED)

This procedure covers the preparation of specimens and measurement of diametral tensile strength resulting from the effects of saturation and accelerated water conditioning of asphalt mixtures in the laboratory. The results are used to predict the long-term stripping susceptibility of the asphalt mixtures and to evaluate the effects of anti-stripping additives.

7.14.1 General

A. Mix Design TSRs:

(1) The Contractor shall prepare one set of test specimens to be tested by QC personnel at the QC mix design or field lab site.

(2) The 150 mm Superpave Gyratory Compactor specimens shall have a void content (VTM) of 7.0 ± 0.5%, except S 4.75A mixes shall be compacted to a VTM of 13.0 ± 0.5%.

(3) The Maximum Specific Gravity (G_{mm}) determined during the mix design process will be used to determine the VTM of the compacted specimens.

(4) The compacted specimens must be tested on a test press meeting the requirements of AASHTO T 283 Modified.

(5) Specimens will be tested in accordance with the latest procedures in AASHTO T 283 Modified. The test data shall be submitted to the Asphalt Design Engineer on Form M&T 612 (QMS-2) along with all other required mix design data and forms for approval.

B. Field TSRs:

OPTION 1:

(1) Contractor will sample, test, and furnish TSR results to the Engineer within 7 calendar days after beginning production of each new mix design.

(2) The 150 mm Superpave Gyratory Compactor specimens shall have a void content (VTM) of 7.0 ± 0.5%, except S 4.75A mixes shall be compacted to a VTM of 13.0 ± 0.5%. QC tested TSR specimens shall be retained at the QC lab for five (5) calendar days commencing the day the samples are tested or until disposal permission is given by QA personnel, whichever occurs first.

(3) The Contractor will prepare an additional set of specimens and submit these within five (5) calendar days of obtaining the mix sample to the QA Lab for testing.

(4) Along with these compacted specimens, the Contractor shall furnish 5000 grams of loose mix from the same sample. QA will perform the Maximum Specific Gravity test as required by mix type.

(5) If the QC's first production TSR results fail to meet the minimum TSR specification requirements, but do not exceed the individual test control limit for that mix type, the Contractor will immediately resample. The Contractor will then compact another set of specimens for testing. The process specified in steps (1) through (3) above shall be repeated. If the first production TSR results exceed the applicable individual test control limits, production of that mix design will cease immediately and shall not resume until approval is given by the Engineer. If the QC's first production TSR results meet minimum requirements, but the corresponding QA split sample results fail to meet the minimum requirement and the QA split sample results are not more than 5% below minimum with no

visual stripping in either set, the results will be considered reasonably acceptable. (The determination of visual stripping will be made by QA personnel). If the corresponding QA split sample results are more than 5% below the minimum requirement or exhibit stripping, the Contractor shall be directed to take a second production TSR sample.

(6) If the QC's second production TSR results fail to meet the minimum TSR specification requirement, the Contractor's production of that mix design shall be stopped. Production may resume once joint testing as outlined in OPTION 2 below indicates the minimum requirement has been met and the results are approved by the Engineer. If the QC's second production TSR results meet minimum requirements, but the corresponding QA results fail to meet the minimum requirement and the QA results are not more than 5% below minimum with no visual stripping in either set, the results will be considered reasonably acceptable. If the corresponding QA split sample results are more than 5% below the minimum requirement or exhibit stripping, the Contractor shall stop production. Production may resume once joint testing as outlined in OPTION 2 below indicates the minimum requirement has been met and the results are approved by the Engineer.

<u>OPTION 2:</u>

(1) The Contractor may elect to sample and prepare one set of specimens to be tested jointly by QC/QA personnel at a mutually agreed upon lab site with the results being determined within 7 calendar days of beginning normal production. TSR testing will not be performed until both parties are present.

(2) The 150 mm Superpave Gyratory Compactor specimens shall have a void content (VTM) of $7.0 \pm 0.5\%$. QA shall confirm void content prior to testing.

(3) The Contractor will also furnish 5000 grams of loose mix from the same sample the TSR sample was taken. This mix will be tested jointly to determine the Maximum Specific Gravity (G_{mm}).

(4) If the first production QC TSR fails to meet the minimum TSR requirements for that mix type, but does not exceed the individual TSR test control limits, or is not reasonably acceptable as described in (6) below, the Contractor shall immediately resample and compact another set of specimens for testing. The process specified in steps (1) through (3) above shall be repeated. If the first production QC TSR fails to meet the minimum and exceeds the individual test control limits for that mix type, the Contractor will immediately stop production of that mix design and not resume until given approval by the Engineer.

(5) If the QC's second production TSR results fail to meet the minimum requirement, or is not reasonably acceptable as determined in (6) below, the Contractor's production of that mix shall be stopped until field tests indicate the minimum requirement has been met, and approved by the Engineer.

(6) When results fail to meet minimum requirements and the results are not more than 5% below minimum with no visual stripping, the results will be considered reasonably acceptable. The determination of visual stripping will be made by QA personnel. Any other failing results will be considered unacceptable, unless otherwise approved by the Engineer.

C. <u>Verification TSRs:</u>

(1) After the minimum specification requirement is met on plant produced mix, QA will obtain random verification TSR test samples at a minimum frequency of 10% of QC's frequency. QA personnel will prepare, test, and furnish results of these verification TSR samples to QC within 7 calendar days of the sample being taken.

(2) If the verification TSR results do not meet the minimum requirement and the results are not more than 5% below minimum with no visual stripping the results will be considered reasonably acceptable.

(3) If two consecutive randomly sampled and tested verification TSRs fail to meet the minimum requirement, or are not reasonably acceptable as described above, production of that mix design shall cease until additional TSR tests indicate the minimum requirement has been met and approved by the Engineer.

(4) At this point, the Contractor and QA personnel will sample, prepare and test all non-production TSR specimens together. At this same time, another sample of the same mix will be taken and submitted by QA to the M & T Asphalt Design Engineer for TSR testing. Test results of the QC/QA TSR will be forwarded to the Asphalt Design Engineer as soon as the results are known. If the QC/QA test meets the minimum requirement, the Asphalt Design Engineer may elect not to perform TSR testing on the split portion of this sample.

(5) The Contractor has the option of preparing extra sets of specimens at any time for his own QC testing.

D. <u>Additional TSR Testing is Required:</u>

(1) When Warm Mix Asphalt (WMA) is being produced using new WMA technologies or NCDOT-Approved WMA Technologies with "Trial Approval" status:
- One TSR prior to initial production for each plant at the following minimums: one TSR for Surface mixes, one TSR for Intermediate mixes, and one TSR for Base mixes; <u>and</u>
- One TSR for every 15,000 tons for each JMF, with the first production TSR coming within 7 calendar days after beginning production of each new mix design.

(2) When Warm Mix Asphalt (WMA) is being produced using Approved WMA Technologies with "Limited Approval" (or higher) status:
- One TSR within 7 calendar days after beginning production of each new mix design.

(3) When a change is made in the non-strip additive or dosage of any mix design, unless otherwise approved by the Engineer.

NOTE: In this case, TSRs shall be performed by QC personnel and approved by the Engineer prior to production of that mix to the project.

(4) When deemed necessary by the Engineer.

NOTE: The Engineer may allow TSR testing for each plant at the following minimums: one TSR for Surface, one TSR for Intermediate, and one TSR for Base. This can only be allowed where a given set of materials have shown a good history of TSR results.

7.14.2 Equipment

A. Compactor - meeting the requirements of Section 7.11.2 (Superpave Gyratory Compactor)
B. Vacuum Container - meeting the requirements of Section 7.12.2 (Maximum Specific Gravity).
C. Vacuum Pump or Aspirator - meeting the requirements of Section 7.12.2 (Maximum Specific Gravity).
D. Manometer and Vacuum Gauge - meeting the requirements of Section 7.12.2 (Maximum Specific Gravity).
E. Balance and Water Tank - meeting the requirements of Section 7.13.2 (Bulk Specific Gravity).
F. Water Bath - capable of maintaining a temperature of 140 ± 2°F (60 ± 1°C).
G. Water Bath - capable of maintaining a temperature of 77 ± 2°F (25 ± 1°C).
H. Bags or Containers - heavy-duty leak proof plastic bags or containers for temperature conditioning of specimens.
I. Loading Jack or Test Press - with ring dynamometer or load cell as required in AASHTO T 245 that produces a uniform vertical movement of 2 in. (50 mm) per minute. Must be a recording test press, or a test press that will maintain the peak load reading after the specimen has broken.
K. Loading Strips - steel loading strips with a concave surface having a radius of curvature equal to the nominal radius of the test specimen. The loading strips shall be 0.75 in (19.1 mm) wide for specimens 150 mm in diameter. The length of the loading strips shall exceed the final compacted thickness of the specimens. The edges of the loading strips shall be rounded by grinding.
   Note: The Lottman Breaking Head is an acceptable substitute for the Loading Strips.
L. Oven - a forced-draft oven, thermostatically controlled, capable of maintaining any desired temperature setting from room temperature to 350°F ±5 °F (176°C ± 3°C).
M. Metal Pans - having a surface area of 75-200 in.^{2} (48,400-129,000 mm^2) and a depth of 1 - 2 in. (25 - 50 mm).

7.14.3 Sample

A. Laboratory-Mixed, Laboratory-Compacted Specimens:
   (1) Prepare at least eight (8) gyratory test specimens using the same blend as the mix design and the optimum binder content. Compaction of the test specimens shall be completed using a Superpave Gyratory Compactor.
   (2) After mixing, the mixture shall be placed in the required pan at a depth of approximately 1 in. (25 mm) and cooled at room temperature for 2 ± 0.5 hours. Then, the mixture shall be placed in a 140 ± 5°F (60 ± 3°C) oven for 16 ± 1 hour s for curing. The pans should be placed on spacers to allow air circulation under the pan if the shelves are not perforated.
      Note: If the minimum TSR value can be achieved without the curing period, the Engineer may waive this requirement once satisfactory results are shown.
   (3) After curing, place the mixture in an oven for 2 hours ± 10 minutes at the compaction temperature ±5°F (3°C) prior to compaction.
      Note: The compaction temperature for the specimen should be that recommended for the type binder being used (See Section 7.11.3 for temperatures).
   (4) The mixture shall be compacted to a height of 95 ± 5 mm with 7.0 ± 0.5% air voids, except type S 4.75A which will be compacted to a void content of 13.0 ± 0.5%. This level of voids may be obtained by adjusting the amount of mix placed into the gyratory compactor mold.
   (5) All other factors should remain constant during the compaction process.

Note: Due to the elevated void content and potential instability of the specimens, ensure each is adequately cool and stable prior to removal from the mold.

B. Plant-Mixed, Laboratory-Compacted Specimens:
   (1) Obtain a 200 lb. (90 kg) sample of plant mix from a truck in accordance with Section 7.5 of this Manual.
   (2) Prepare at least eight (8) gyratory test specimen using plant-produced mix meeting the individual control limits of the applicable Job Mix Formula. Compaction of the test specimens shall be completed using a Superpave Gyratory Compactor.
   (3) No loose-mix curing as described in Section (A) above shall be performed on the plant-produced samples. After sampling, place the mixture in an oven until it reaches the compaction temperature ±5°F (3°C).
   Note: The compaction temperature for the specimen should be that recommended for the type binder being used (See Section 7.11.3 for temperatures).
   (4) The mixture shall be compacted to a height of 95 ± 5 mm with 7.0 ± 0.5 % air voids, except type S 4.75A mixes which will be compacted to a void content of 13.0 ± 0.5%. This level of voids may be obtained by adjusting the amount of mix placed in to the gyratory compactor mold.
   (5) All other factors should remain constant during the compaction process.
   Note: Due to the elevated void content and potential instability of the specimens, ensure each is adequately cool and stable prior to removal from the mold.

7.14.4 Evaluation of Test Specimens and Grouping

A. Allow the compacted specimens to cool to room temperature 77 ± 2°F (25 ± 1°C).
B. Determine the height of each specimen from the Gyratory Printout.
C. Determine the Bulk Gravity (G_{mb}) of each specimen using the methods described in Section 7.13 of this Manual.
D. Determine the Maximum Specific Gravity (G_{mm}) on an uncompacted sample of the same mix using the methods described in Section 7.12 of this Manual.
E. Calculate the Percent Air Voids (VTM) for each specimen. All test specimens must have 7.0 ± 0.5% voids, except S 4.75A mixes must have 13.0 ± 0.5% voids.
F. Sort specimens into two (2) subsets so that the average air voids of the two subsets are approximately equal.
G. Allow specimens to remain at room temperature for 24 hours before proceeding.

7.14.5 Preconditioning and Testing of Specimens

One subset will be tested dry and the other will be partially vacuum-saturated, and warm water conditioned before testing. Both subsets shall be tested at the same time.

A. DRY Subset
   (1) The four dry specimens should be stored at room temperature 77 ± 1°F (25 ± 0.5°C) until testing.
   (2) Before testing, the dry specimens shall be placed in heavy-duty leak-proof plastic containers.

(3) The specimens shall then be placed in a 77 ± 1°F (25 ± 0.5°C) water bath for 2 hours ± 10 minutes. The specimens should have a minimum of 1 in. (25 mm) of water above their surface.
(4) Remove the specimens from the water bath and place in the testing head. Care must be taken so that the load will be applied along the diameter of the specimen.
(5) Apply the load to the specimen using the loading jack until the specimen fails. The rate of loading should be constant at 2 in. (50 mm) per minute. Record load at failure in Newtons.
(6) Remove the specimen from the machine and pull apart at the break in the specimen. Inspect the interior surface for stripping and record the observations.
(7) Using an infrared thermometer, record the internal temperature of each specimen after they are broken apart.

B. WET Subset
(1) Place a specimen in the vacuum container supported above the container bottom by a perforated spacer.
(2) Fill the container with water at 77 ± 1°F (25 ± 0.5°C) so that the specimen has at least 1 in. (25 mm) of water above its surface.
(3) Apply a vacuum of 10 - 26 in. of Hg (13 - 67 kPa) for a short time (approximately 5 to 10 minutes) to saturate the specimen.
(4) The acceptable percent saturation is between 70 - 80 %.
Note: Saturation times vary with vacuum pump type and condition.
(5) Determine Percent Water Pickup by comparing SSD weight after saturation with SSD weight before Saturation.
(6) Determine the Percent Saturation by comparing the volume of absorbed water after saturation with the volume of air voids before saturation. Preferred saturation is approximately 75%.
1. If the Percent Saturation is between 70 - 80 %, proceed to the next step.
2. If the Percent Saturation is less than 70 %, repeat above steps (1) - (3) using more vacuum and/or time.
3. If the Percent Saturation is above 80 %, the specimen should be considered damaged and will be discarded. Repeat above steps (1) - (3) on the remaining specimens using less vacuum and/or time.
(7) After all of the Wet Subset have been correctly saturated, place the specimens in a water bath at 140 ± 2°F (60 ± 1°C) for 24 ± 1 hours. The specimens should have a mini mum of 1 in. (25 mm) of water above their surface.
(8) Remove the specimens from the 140 ± 2°F (60 ± 1°C) water bath and place in another water bath at 77 ± 1°F (25 ± 0.5°C) for 2 hours ± 10 minutes. The specimens should have a minimum of 1 in. (25 mm) of water above their surface. It may be necessary to add ice to the water bath to prevent the water temperature from rising above 77 ± 1°F (25 ± 0.5°C). Not more than 15 minutes should be required for the water bath to reach 77 ± 1°F (25 ± 0.5°C).
Note: The Dry Subset should also be put in the 77 ± 1°F (25 ± 0.5°C) water bath at this time.
(9) Remove the specimens from the water bath and place in the testing head. Care must be taken so that the load will be applied along the diameter of the specimen.

(10) Apply the load to the specimen using the loading jack until the specimen fails. The rate of loading should be constant at 2 in. (50 mm) per minute. Record load at failure in Newtons.

(11) Remove the specimen from the machine and pull apart at the break in the specimen. Inspect the interior surface for stripping and record the observations.

(12) Using an infrared thermometer, record the internal temperature of each specimen after they are broken apart.

(13) Visually compare the fractured surfaces of the Wet and Dry Subset of the pills and record these results on the worksheet.

(14) The Tensile Strength Ratio (TSR) is the percentage that the average wet tensile strength is of the average dry tensile strength. The averages will be computed from the two remaining specimens after discarding the high and low specimens of each subset.

7.14.6 Report

Report TSR will be calculated in accordance with AASHTO T 283 Modified using Form QMS-2 (M&T 612). The TSR will be reported to the nearest whole percent.

7.15 DETERMINATION OF DRAINDOWN CHARACTERISTICS IN UNCOMPACTED ASPHALT MIXTURES (AASHTO T 305 Modified)

This test method covers the determination of the amount of draindown in an uncompacted asphalt mixture sample when the sample is held at elevated temperatures comparable to those encountered during the production, storage, transport, and placement of the mixture. The test is particularly applicable to mixtures such as porous asphalt (open-graded friction course) and Stone Matrix Asphalt (SMA).

7.15.1 General

This procedure can be used to determine whether the amount of draindown measured for a given asphalt mixture is within acceptable levels. The test provides an evaluation of the draindown potential of an asphalt mixture during mixture design and/or during field production.

This procedure may involve hazardous materials, operations, and equipment. This procedure does not purport to address all of the safety problems associated with its use. It is the responsibility of the user of this procedure to consult and establish appropriate safety and health practices.

For the purpose of this test method, draindown is considered to be that portion of material that separates itself from the sample as a whole and is deposited outside the wire basket during the test. The material that drains may be composed of either asphalt binder or a combination of asphalt binder and fine aggregate.

A sample of the asphalt mixture to be tested is prepared in the laboratory or obtained from field production. The sample is placed in a wire basket, which is positioned on a plate or other suitable container of known weight. The sample, basket, and plate or container are placed in a forced draft oven for one hour at a pre-selected temperature. At the end of one hour, the basket containing the sample is removed from the oven along with the plate or container and the weight of the plate or container is determined. The amount of draindown is then calculated.

7.15.2 Equipment

A. Forced Draft Oven - capable of maintaining the temperature in a range from 250 - 350º F (120 - 175º C). The oven should maintain the set temperature to within ±3.6º F (±2º C).
B. Plates - or other suitable containers of appropriate size. The plates or containers used should be of appropriate durability to withstand the oven temperatures. Cake pans or pie tins are examples of suitable types of containers.
C. Standard Basket - meeting the dimensions shown in Figure 1. The basket shall be constructed using standard 0.25 inches (6.3 mm) sieve cloth as specified in AASHTO M 92.
D. Balance - capable of being read to the nearest 0.1 gram.
E. Spatula, trowels, mixer, and bowls as needed.

7.15.3 Sample

A. Laboratory Prepared Samples:

(1) Two samples are required at the optimum asphalt binder content. The draindown should be determined at two different temperatures: the anticipated plant production temperature as well as 27º F (15º C) above. For each temperature, two samples should be tested. Thus for one asphalt mixture, a minimum of four samples will be tested.
(2) Dry the aggregate to constant weight and sieve it into appropriate size fractions.

(3) Determine the anticipated plant production temperature or select a mixing temperature in accordance with AASHTO T 312.

(4) Place into separate pans for each test sample the amount of each size fraction required to produce completed mixture samples having a weight of 1200 ± 200 grams. The aggregate fractions shall be combined such that the resulting aggregate blend has the same gradation as the mix design. Place the aggregate samples in an oven and heat to a temperature not to exceed the mixing temperature determined above by more than approximately 50º F (28ºC).

(5) Heat the asphalt binder to the temperature determined above.

(6) Place the heated aggregate in the mixing bowl. Add stabilizing fibers, hydrated lime, and/or other dry admixtures as specified to the dried aggregate. Thoroughly mix the dry components before the addition of the asphalt binder. Form a crater in the aggregate and add the required amount of asphalt binder. The amount of asphalt shall be such that the final sample has the same asphalt content as the mix design. At this point, the temperature of the aggregate and asphalt binder shall be within the limits of the mixing temperature established in Section (3) above. Using a spatula (if mixing by hand) or a mixer, mix the aggregate (and stabilizer if any) and asphalt binder quickly until the aggregate is thoroughly coated.

B. <u>Plant Produced Samples:</u>

(1) Two samples should be tested at the plant production temperature.

(2) Obtain samples of freshly produced hot-mix asphalt in accordance with Section 7.5 of this Manual. Each sample should have a total weight of 1200 ± 200 grams.

7.15.4 Procedure

A. Transfer the hot laboratory produced or plant produced uncompacted mixture sample to a tared wire basket. Place the entire sample in the wire basket. Do not consolidate or otherwise disturb the sample after transfer to the basket. Determine the weight of the sample to the nearest 0.1 gram (**M**). Care should be exercised to ensure that the sample does not cool more than 25ºC below the test temperature.

B. Determine and record the weight of a plate or other suitable container to the nearest 0.1 gram (**P_i**). Place the basket on the plate or container and place the assembly into the oven at the determined production temperature for 1 hour ± 5 minutes. If the sample has cooled more than 25ºC below the test temperature, the test should be conducted for 70 ± 5 minutes.

C. After the sample has been in the oven for the time specified, remove the basket and plate or container from the oven. Determine and record the weight of the plate or container plus draindown material to the nearest 0.1 gram (**P_f**).

D. Calculate the percent of mixture that drained by subtracting the initial plate or container weight from the final plate or container weight and divide this by the initial total sample weight. Multiply the result by 100 to obtain a percentage:

$$D = \frac{P_f - P_i}{M} \times 100$$

where, P_i = initial plate weight (grams)
P_f = final plate weight (grams)
M = initial total sample weight (grams)
D = Percent Draindown (%)

7.15.4 Report

Report the average percent draindown to nearest one decimal place (x.x%) and include the test temperature used.

Figure 1
Wire Basket Assembly

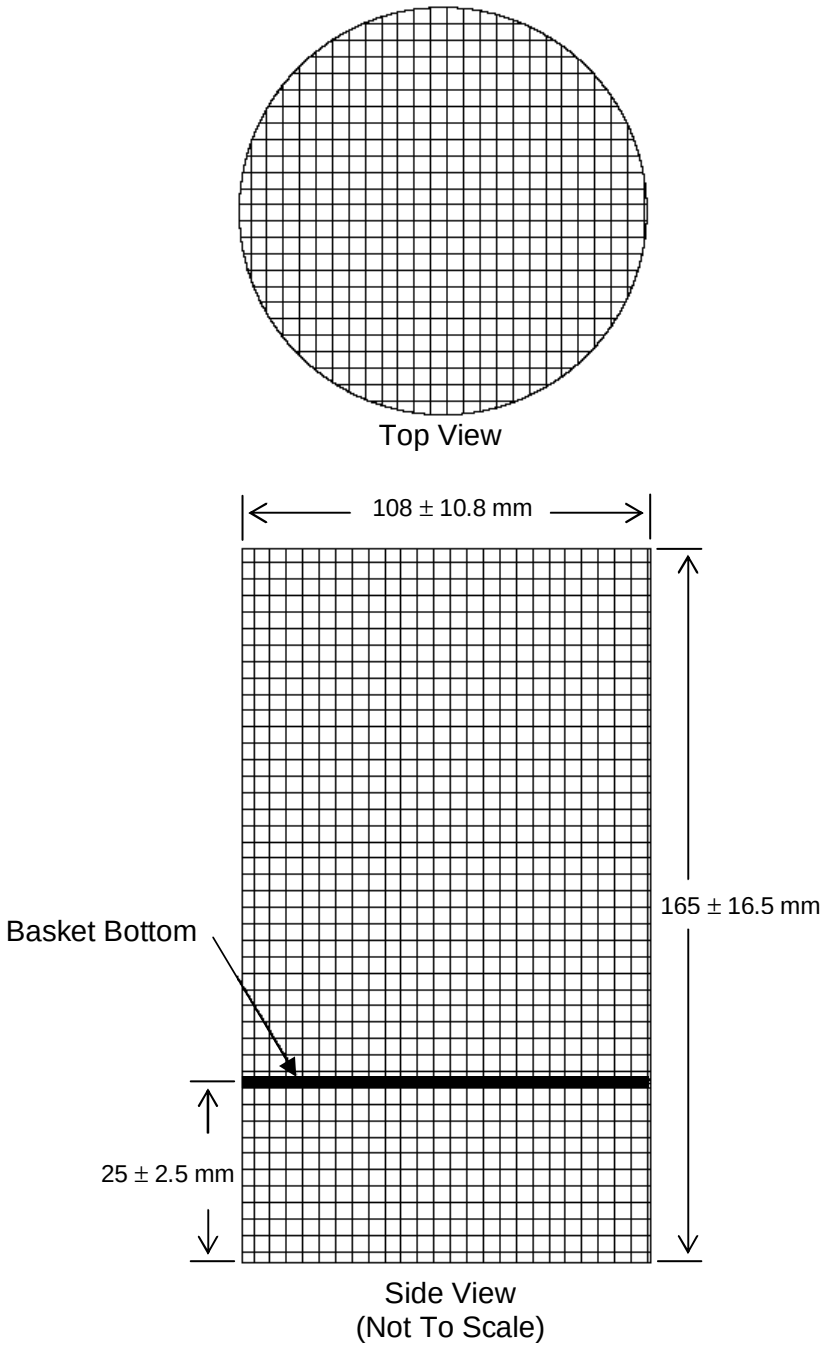

7.16 QMS FIELD CALCULATIONS

Note: In order to monitor mix quality, several calculations other than those covered within specific test procedures, are necessary. Forms QA/QC-1 Rev. and QA/QC-1A Rev. contain the majority of those calculations. This section covers significant decimals and these calculations in detail.

7.16.1 Significant Decimals

The following rule for "rounding off" shall be used in all calculations. When the digit to be dropped (one digit beyond significant digit) is 0, 1, 2, 3, or 4, the preceding digit will not change. When the digit to be dropped (one digit beyond significant digit) is 5, 6, 7, 8, or 9, the preceding digit will be increased by one.

Note: Do not round one digit beyond the significant decimal prior to rounding to the specified significant decimal.

Example: Required significant decimal of 0.001
2.39**5**4 will be 2.39**5** (Drop the 4 and leave the 5 as is)
2.39**5**5 will be 2.39**6** (Drop the last 5 round up the first 5 to a 6)

Note: Each internal calculation used to arrive at a final combined result shall be calculated to at least one decimal place farther than the specified significant decimal.

Significant Decimals				
Specific Gravities	- All	0.001	% Solids by Volume Aggregate Only	0.1 %
Binder Content	- All Methods	0.1%	% Voids Filled with Binder (VFA)	1%
% VMA		0.1%	Tensile Strength Ratio (TSR)	1%
Dust/Effective Binder Ratio		0.1%	Ash Correction	0.1%
Unit Weight Total Mix		0.1 lbs	% Moisture	0.1%
% Solids by Volume Total Mix		0.1%	% Binder Absorption (P_{ba})	0.1%
% Air Voids (VTM)		0.1%	% G_{mm} @ N_{ini}	0.1%
% Effective Binder Content (P_{be})		0.1%	% G_{mm} @ N_{des}	0.1%
% Volume of P_{be} (Effective)		0.1%	% G_{mm} @ N_{max}	0.1%
% Draindown		0.1%	G_{mb} @ N_{ini} Correction Factor	0.001
			Corrected G_{sb}	0.001
Gradation			**Density**	
0.075 mm Sieve		0.1%	% Compaction	0.1%
0.150 mm through 50 mm Sieves		1%		

7.16.2 Voids in Total Mix (VTM) Calculation

The air voids determination is a relationship between maximum specific gravity (G_{mm}) and Gyratory bulk specific gravity (G_{mb} @N_{des}). Air voids can be calculated for both Gyratory compacted specimens and roadway compacted pavements (cores) using the following formulas.

A. Gyratory Compacted Specimens:

Voids in Total Mix (VTM) for each specimen will be calculated using the following formula:

$$\%VTM @ N_{des} = \frac{G_{mm} - G_{mb} @ N_{des}}{G_{mm}} \times 100$$

where:

- G_{mm} is the sample maximum specific gravity, and
- G_{mb} @ N_{des} is the **individual** bulk specific gravity of each specimen

Note: The VTM of the 3 specimens will be averaged to determine the VTM for the total sample.

B. Roadway Compacted Specimens (cores):

In-place pavement air voids for each core sample may be calculated using the following formula:

$$\text{Pavement in-place voids} = \frac{\text{Moving Avg. } G_{mm} - \text{Pavement Core } G_{mb}}{\text{Moving Avg. } G_{mm}} \times 100$$

where:

- Moving Avg. G_{mm} is the last moving average for that day's mix, and
- Pavement Core G_{mb} is the pavement core sample G_{mb}

Calculate air voids (VTM) to the nearest 0.1 percent (x.x %).

7.16.3 Aggregate Effective Specific Gravity (G_{se}) Calculation

The Aggregate Effective Specific Gravity (G_{se}) includes all void spaces in the aggregate particles except those that absorb asphalt.

Calculate the G_{se} value of the actual sample by using the following formula :

$$\text{Calculated } G_{se} = \frac{100 - P_b}{\left[\frac{100}{G_{mm}}\right] - \left[\frac{P_b}{G_b}\right]}$$

where:

- P_b is the actual sample asphalt percentage (ignition test results)
- G_{mm} is the actual sample Maximum Specific Gravity Test result
- G_b is from the JMF

Calculate G_{se} to three decimal places (x.xxx).

7.16.4 Voids in Mineral Aggregate (VMA) Calculation

VMA is the intergranular void space between the aggregate particles in a compacted paving mix that includes both the air voids and the volume of effective asphalt binder content, expressed as a percentage of the total volume of the sample. During mix design, VMA is calculated using the actual G_{sb} determined for the design mix. However, during field production, fluctuations of the aggregate blend rates, fluctuations of individual aggregate's specific gravity and other factors may cause G_{sb} to change from the mix design value. Since it is impractical to determine the actual G_{sb} on each sample due to time constraints, the G_{sb} from the mix design can be corrected to reflect these variations. The sample G_{se} can easily be calculated from the sample Gmm (See Subsection 7.16.3). The mix design G_{sb} is then corrected based on the ratio of the mix design G_{se} to calculated G_{se}. The corrected G_{sb} is then used in calculating the sample VMA.

Step (1): Calculated the Corrected G_{sb} for the sample as follows:

$$\textbf{Corrected } G_{sb} = \frac{\textbf{Calculated } G_{se}}{\textbf{Mix Design } G_{se}} \times \textbf{Mix Design } G_{sb}$$

where:

- Calculated G_{se} is from actual sample (See 7.16.3 above)
- Mix Design G_{se} is from original mix design
- Mix Design G_{sb} is from original mix design

Calculate Corrected G_{sb} to 3 decimal places (x.xxx)

Step (2): Then calculate the VMA for the sample using the following formula:

$$\%VMA = 100 - \left[\frac{G_{mb} @ N_{des} \times (100 - P_b)}{\text{Corrected } G_{sb}} \right]$$

where:

- G_{mb} @ N_{des} is the <u>average</u> specimen bulk specific gravity from QA/QC-1 Form
- P_b is the actual percent binder <u>from the field test</u>, and
- Corrected G_{sb} is the corrected aggregate bulk specific gravity from Step (1) above

Calculate VMA to the nearest 0.1 percent (x.x %).

7.16.5 Voids Filled with Asphalt Binder (VFA) Calculation

The voids filled with asphalt binder (VFA) is a relationship between the voids in the mineral aggregate (VMA) and the voids in the total mix (VTM). The voids filled with asphalt binder (VFA) is a determination of the percentage of the voids in the mineral aggregate (VMA) that is filled with effective asphalt (not including absorbed asphalt).

VFA is calculated using the following formula:

$$\textbf{\% VFA} = \frac{\textbf{\% VMA - \% VTM}}{\textbf{\% VMA}} \times \textbf{100}$$

where:

- %VMA is the sample VMA as computed in 7.16.4 above (from QA/QC-1), and
- %VTM is the sample average as indicated in 7.16.2 above (from QA/QC-1)

Calculate VFA to the nearest 1 percent (x %).

7.16.6 Dust / Effective Binder ($P_{0.075}$ / P_{be}) Ratio Calculation

The Dust / Effective Binder ratio is a relationship between the Effective (non-absorbed) Asphalt Binder (P_{be}) and the amount of the $P_{0.075}$ in the mix. The Superpave Mix Design Specification requirement is 0.6 to 1.4 for all mixes.

The dust/effective binder ratio of the plant produced mix sample is calculated using the following formula:

$$\textbf{Dust / Effective Binder Ratio} = \frac{\textbf{Washed } P_{0.075mm}}{P_b \textbf{ - \% Absorption (Mix Design)}}$$

where:

- Washed $P_{0.075}$ is the actual washed percent passing the 0.075 mm sieve,
- P_b is the actual percent asphalt binder from the field test, and
- % Absorption is the percent binder absorption from the Mix Design/JMF.

Calculate the Dust / Binder ratio to the nearest 0.1 percent (x.x%)

7.16.7 Percent G_{mm} @ N_{ini} Calculation

The Percent G_{mm} @ N_{ini} is a percentage number indicating resistance of a mix to compaction. It is the percentage that the mix bulk specific gravity achieved at the specified number of gyrations (N_{ini}) is of the known G_{mm} of the mix. Lower percentages generally indicate more resistance to compaction and therefore, more rut resistance under traffic.

Calculate % G_{mm} @ N_{ini} using the following formula:

$$\%G_{mm} @ N_{ini} = \frac{\text{Average } G_{mb} @ N_{ini}}{\text{Actual Test } G_{mm}} \times 100$$

where:

- Average G_{mb} @ N_{ini} is test result from the QA/QC-1SP Form and
- Actual Test %G_{mm} is test results from QA/QC-2 Form for the current mix test

Calculate %G_{mm} @ N_{ini} to the nearest 0.1 percent (x.x%).

7.16.8 Reporting of Test Data

The Contractor shall make all records available to the Engineer, upon request, at any time during project construction. All QC records and forms shall be completed and distributed in accordance with the most current version of this manual. In general, mix test data is required to be documented on the QC-1 Form and faxed to the appropriate QA Lab by the beginning of the next work day after the test is completed, not to exceed 3 calendar days.

All mix test results are also to be input into the Quality Assurance Program (QAP) by the beginning of the next work day after the test is completed not to exceed 3 calendar days.

The Quality Assurance Webpage may be accessed via the following link:

https://apps.dot.state.nc.us/Vendor/QAP/login.aspx?

7.17 ALLOWABLE RESAMPLING AND RETESTING FOR MIX DEFICIENCIES

The Contractor may request to resample and retest for plant mix deficiencies when individual QC test(s) exceed one or more of the mix property target(s) by more than the tolerances indicated below. Retesting should only be allowed for mix deficiencies that exceed the limits below. Retesting shall be approved by the Engineer prior to being performed and shall be in accordance with the steps outlined below. The retesting shall be performed within 10 days of the initial QC test results. Retests for any mix deficiency other than those listed below will not be allowed unless otherwise approved by the Engineer. The Department reserves the right to direct the Contractor to resample and retest at any time or location. Should the Contractor elect not to resample and retest as outlined above, all applicable mix shall be removed and replaced with mix that meets the specifications.

TABLE 609-2
RETEST LIMITS FOR MIX DEFICIENCIES

Property	Limit
VTM	by more than ± 2.5%
VMA	by more than ± 2.0%
% Binder Content	by more than ± 1.0%
0.075 mm sieve	by more than ± 3.0%
2.36 mm sieve	exceeds both the Specification mix design limits and one or more of the above tolerances
TSR	by more than - 15% from Specification limit

7.17.1 Guidelines for Retests of Plant Mix Deficiencies

1. If the QA sample fails to be within the limits of precision as defined in Table 609-3, when compared to the QC sample representing that lot, the Dispute Resolution (DR) sample will be tested at the Central (or another Division QA Lab)..
2. If the Dispute Resolution (DR) sample is within the limits of precision as defined in Table 609-3, when compared to the QC sample representing that lot, the QC result will be used as the final test result.
3. If the Dispute Resolution (DR) sample fails to be within the limits of precision as defined in Table 609-3, when compared to the QC sample representing that lot, the results of the Dispute Resolution (DR) test will replace the QC test results for the lot and the retest procedures (Section 7.17.2) will be used where applicable.
4. The QA Supervisor verbally notifies the Contractor, Division, and Project Engineer of removal and replacement due to deficiency, as soon as possible.
5. The Contractor's written request for the option of retesting will include timeframe for testing, number of tests, types of tests, location of samples, etc. and be submitted to the Engineer (with a copy to the QA Supervisor) within 72 hours. All proposed sampling and testing must meet NCDOT minimum specification requirements.
6. Sampling for retests will be by coring in-place mix from the roadway.
7. The increment of mix in question will be divided into sub-lots for retesting.
8. If retests are requested by the Contractor, the Engineer will evaluate his proposal and give a written response within 72 hours.

9. If retests are allowed, QC sampling and testing shall be in the DOT representative's presence. Testing shall be performed at the appropriate Contractor's QC Lab, unless otherwise specified by the Engineer.
10. Retest results will be evaluated by the Division, through consultation with the Asphalt Laboratory. The Contractor will be notified of the acceptance decision in writing by the Engineer.

7.17.2 Retest Procedures

1. Increment tonnage in question shall be located by station numbers on the roadway.
2. Increment tonnage in question shall be divided into approximate equal sub-lots, unless otherwise approved.
3. Increment tonnage of 375 tons or more must be divided into 3 sub-lots.
4. Increment tonnage of less than 375 tons will be divided into a minimum of 2 sub-lots, unless directed otherwise by the Engineer.
5. All sub-lots shall be marked on the roadway by the Contractor and verified by the Engineer.
6. Each sub-lot shall be cored at one random location sufficiently to yield enough mix to perform a full set of tests (% Binder, Gradation, G_{mb}, G_{mm}, VTM, and in-place Voids). Only one set of samples will be allowed in each sub-lot, unless otherwise approved. Sub-lot specimens shall be cores with a minimum diameter of 6 in. (150 mm). Pavement slabs or other irregular shapes will not be allowed, unless directed by the Engineer.
7. Within one working day of the samples being taken, the area from which the cores were taken shall be saw-cut to square up the area, all excess material removed and the area cleaned, tacked, filled with hot asphalt mix of the same type and compacted to conform to the surrounding area by the Contractor to the Engineer's satisfaction.
8. Full depth cores must be satisfactorily separated by mix layer by the Contractor.
9. All necessary traffic control shall be the Contractor's responsibility.
10. Core samples from the same sub-lot will be combined for testing, samples from different sub-lots shall not be combined for testing.
11. QC test results shall be reported on Form QA-2A separately by sub-lot. All QC test results must be immediately furnished to the QA Supervisor.
12. Department personnel shall be present during all sampling and testing. Testing shall be performed by the QC personnel at the appropriate Contractor's QC Lab, unless otherwise specified by the Engineer.
13. The average test results from asphalt mix accepted and allowed to remain in place shall be used in place of the original QC plant test results. This would include QMS Forms and charts used for acceptance.
14. Sub-lot values are for final disposition and payment only. The appropriate QMS forms and charts will use original QC test results.
15. The increment tonnage in question will be evaluated and may be accepted based on each sub-lot's test results. QC personnel will not be held retroactively responsible for any actions that would have been required as a result of replacement of QC data by Quality Assurance.

7.18 QUALITY ASSURANCE (QA) SAMPLING AND TESTING

Quality Assurance (QA) is the Department's process of assuring that the Contractor's Quality Control (QC) process and testing is an accurate representation of the quality of the mix being produced. This process applies to all materials that are included in asphalt mix production, including asphalt mix, binder, aggregates, RAP, and RAS. Quality Assurance will be accomplished in the following ways:

1. by testing Verification Samples taken independently of the Contractor's QC samples at a frequency equal to or greater than 20% of the QC sample frequency;
2. by conducting Assurance testing of split samples obtained by the Contractor at a frequency equal to or greater than 5% of the quality control frequency;
3. by periodically observing sampling and testing procedures performed by the Contractor;
4. by monitoring required control charts tracking test results of control parameters;
5. by directing the Contractor to take additional samples at any time and any location during production (in lieu of the next scheduled random sample for that increment);
6. by conducting audits; and
7. by any combination of the above.

In all cases, the Department's Quality Assurance and Verification testing will be independent of the Contractor's tests. The Department's program will be conducted by certified QMS technicians. The Engineer will conduct assurance tests on both split QC samples taken by the Contractor and verification samples taken or witnessed by the Department. These samples may be obtained from any location in the process, and selected at random by the Department. The frequencies will be equal to or greater than those specified above. The Engineer may select any or all split samples for assurance testing. Results of QA tests (including verification tests) will be provided to the Contractor within 5 calendar days (excluding official state holidays) after the sample has been obtained.

Differences between the Contractor's and the Department's split sample test results from a given lot will be considered acceptable if within the following limits:

TABLE 609-3
LIMITS OF PRECISION FOR TEST RESULTS

Mix Property	Split Sample Limits of Precision	Verification Limits of Precision
25.0 mm sieve (Base Mix)	± 10.0%	---
19.0 mm sieve (Base Mix)	± 10.0%	---
12.5 mm sieve (Intermediate Mix)	± 6.0%	---
9.5 mm sieve (Surface Mix)	± 5.0%	---
4.75 mm sieve (Surface Mix)	± 5.0%	---
2.36 mm sieve (All Mixes)	± 5.0%	---
0.075 mm sieve (All Mixes)	± 2.0%	---
Asphalt Binder Content	± 0.5%	± 0.75%
Maximum Specific Gravity (G_{mm})	± 0.020	± 0.030
Bulk Specific Gravity (G_{mb})	± 0.030	± 0.040
TSR	± 15.0%	[see Section 7.14.1]

QA retest of prepared QC Gyratory Compacted Volumetric Specimens	± 0.015	---
Retest of QC Core Sample	± 1.2% (% Compaction)	---
Comparison QA Core Sample	± 2.0% (% Compaction)	---
QA Verification Core Sample	± 2.0% (% Compaction)	---
Density Gauge Comparison of QC Test	± 2.0% (% Compaction)	---
QA Density Gauge Verification Test	± 2.0% (% Compaction)	---

In addition to the preceding limits of precision, RAP samples must be within the % binder and gradation tolerances specified in Table 1012-4. (See Section 8 of this Manual)

The Engineer will immediately investigate the reason for differences if any of the following occur:

1. QA test results of QC split sample do not meet the limits of precision (Table 609-3), or
2. QA test results or QC split sample do not meet the allowable re-test limits (Table 609-2), individual test control limits, or the specification requirements, or
3. QA verification test results do not meet the Verification limits of precision (Table 609-3), or
4. QA verification sample test results exceed the allowable retesting tolerances.

If the potential for a pavement failure exists, the Engineer may suspend production, wholly or in part, in accordance with Article 108-7 while the investigation is in progress. The Engineer's investigation may include, but not be limited to the following:

1. Dispute Resolution (DR) sample testing at the Central lab (or another Division QA Lab);
2. Review and observation of the QC technician's sampling and testing procedures;
3. Evaluation and calibration of QC testing equipment;
4. Comparison testing of other retained quality control samples, and/or additional density core samples.

When the Engineer takes a Verification sample, enough mix will be obtained to allow for two separate testing portions. The first portion will be tested and designated as the Verification sample. The second portion will be designated as the Dispute Resolution (DR) sample. This sample will be used in the investigation process should any discrepancies between Contractor and Department samples occur for a given lot.

The Engineer will periodically witness the sampling and testing being performed by the Contractor. If the Engineer observes that the sampling and quality control tests are not being performed in accordance with the applicable test procedures, the Engineer may stop production until corrective action is taken. The Engineer will promptly notify the Contractor of observed deficiencies, both verbally and in writing. The Engineer will document all witnessed samples and tests.

7.18.1 Verification Sampling and Testing Guidelines for Plant Mix

The FHWA Regulations for Quality Control/Quality Assurance programs utilized for acceptance of asphalt pavements contain specific requirements for verification sampling and testing. These must be adhered to in order to conform to the FHWA requirements. The Engineer will obtain verification samples for testing independent of the Contractor's quality control process. These samples will be split for testing by the Department and optional testing by the Central lab (or another Division QA Lab) if there are unacceptable differences in QA / QC results. The Department's current guidelines related to mix testing for verification purposes are as follows:

a. A 200 lbs. (91 kg) sample taken at any point during production at either the plant site or on the roadway. All samples shall be split in accordance with Section 7.5 of this manual, with the appropriate portion being given to the Contractor for optional testing. The Dispute Resolution (DR) portion of the sample shall be stored at the QA Lab until it is either needed for testing or determined that it is no longer needed.
b. Sample shall be taken by either certified NCDOT Level I or Level II Plant technician.
c. Samples taken at a rate of 20% of the required number of QC samples.
d. Verification samples will be in addition to the 5% minimum required QA comparison test of the QC split samples.
e. Differences between the Contractor's original QC and the Department's Verification sample test results from a given lot will be considered acceptable if within the Verification limits of precision shown in Table 609-3.
f. If the comparison is not within the Verification limits of precision of Table 609-3, the QA Supervisor will investigate the reason(s) for the difference.
g. Verification samples will be assigned numbers by the QA Supervisor. These numbers will be per mix design per plant and will correspond to the QC sample numbers. The number will begin with the year, followed by a dash, followed by the corresponding QC sample number for that 750 ton increment, followed by a "V". For example: 12-1V if from 1st 750 ton QC increment, 12-12V if from 12th 750 QC increment, etc.
h. Documentation of verification sampling and testing will be on QAP and the appropriate QMS forms, which will be maintained by the QA Supervisor in the appropriate plant file. These samples shall be logged by the QA Supervisor on Form QA-3. If the verification sample results validate the QC results for the same 750 ton increment, these verification results shall be plotted on the Contractor's QC charts for information. Should the verification results and/or the investigation by the QA Supervisor determine the QC results for that same lot to be incorrect, the correct results as determined by the Department shall replace the applicable QC data on the control charts.
i. Verification TSR tests shall be conducted at the frequency and in accordance with the procedures specified in Section 7.14.1 of this Manual.

7.18.2 Dispute Resolution Testing Guidelines for Plant Mix

The Dispute Resolution process for a Verification sample is as follows:

1. If sample fails to be within the Verification limits of precision as defined in Table 609-3, when compared to the QC sample representing that lot, the DR sample will be tested at the Central lab (or another Division QA Lab).
2. If the DR sample is within the Verification limits of precision as defined in Table 609-3, when compared to the QC sample representing that lot, the QC result will be used as the final test result.
3. If the DR sample fails to be within the Verification limits of precision as defined in Table 609-3, when compared to the QC sample representing that lot, the results of the DR test will replace the QC test results for the lot and the retest procedures (Section 7.17) will be used where applicable.

7.19 ACCEPTANCE BASED ON MIX TESTING

A high frequency of asphalt plant mix or density deficiencies may result in future deficient asphalt being excluded from acceptance at an adjusted contract unit price in accordance with Article 105-3. The Engineer shall document cases of frequent deficiencies and provide in writing the details of deficiencies to the Contractor with copies to the Pavement Construction Engineer and Asphalt Design Engineer. Upon receipt of these details, the Contractor shall develop a plan for corrective action and submit it to the Engineer in writing. Failure to satisfactorily correct repeated deficiencies may result in future deficient asphalt being excluded from acceptance at an adjusted contract unit price in accordance with Article 105-3. This acceptance process will apply to all asphalt produced or placed and will continue until the Engineer determines a history of quality asphalt production and placement is reestablished.

The Engineer will base final acceptance of the mix on the results of random testing made on split samples during the assurance process, verification samples, retests (if applicable) and validation of the Contractor's quality control process as outlined above and in Articles 609-6 & 609-9.

QC test results that have been proven incorrect, for any reason, will be replaced with the correct test results and related data as determined by the Engineer. QA comparison test results, verification test results, referee test results, and retest results may be used in making this determination. Any one of these or none of these results may be used as the correct results. Just because the referee sample is tested does not mean that its results will automatically be used. The data and the extent of the replaced data is left to the discretion of the Engineer. Assistance in making this decision is available through the Asphalt Laboratory.

Section 8

RECYCLING OF ASPHALT PAVEMENTS

8.1 HOT MIX RECYCLING

Asphalt recycling is not a new idea, since the concept of recycling of asphalt pavements has been around for many decades. However, with increasing economic and environmental needs, asphalt recycling has become a more viable alternative. Aggregate, asphalt binder and fuel costs can be significantly reduced. Depending on the method of milling, the availability and quality of Reclaimed Asphalt Pavement (RAP) material, location of the plant relative to the project, the type of plant used and the amount of moisture in the RAP, a 20% to 40% cost savings may be realized. Also, in most cases where milling is specified, the Contractor retains the RAP material, which has no cost other than milling, processing and hauling. In addition to recycling of asphalt pavement material, the specifications allow the recycling of post manufacturing waste Reclaimed Asphalt Shingle (RAS) material, recycled concrete, tires, glass, slag, and other items. The Department is investigating the use of Post Consumer Reclaimed Asphalt Shingles (PRAS), commonly called “tear off shingles” from residential dwellings.

8.2 HOT-MIX RECYCLING METHODS

Recycled mixtures are produced successfully in both batch and drum-mix plants with some plant modifications required for both. All hot-mix recycling of RAP/RAS is done by the "mixer heat transfer method".

In batch plant recycling, the RAP/RAS is fed either into the plant weigh box or into the hot elevator at stockpile ambient temperature. This is accomplished by use of a system made up of stockpiles, feeding bin, feeder and conveyor system. The virgin aggregate is processed as normal through the regular plant feeding system, dryer, elevator, and tower. The virgin aggregate is superheated in the dryer and transfers its heat to the cold RAP material either in the weigh box and plant mixer, or in the hot elevator, hot bins, weigh box, and plant mixer, depending on which type RAP/RAS introduction method is used. Additional asphalt binder is added into the plant mixer unit.

Drum mix plants are more suited for recycling. The most common technique used is the center inlet method, where the virgin aggregate enters into the burner end of the drum and the RAP material enters at approximately the center of the drum. The virgin aggregate has time to cool down the exhaust gases to prevent smoking of the recycled material. As higher percentages of RAP material are used, less virgin aggregate enters the drum, which increases the temperature exposed to the RAP material. Generally, the asphalt line is moved further down in the drum to a cooler zone to prevent excessive smoking of the recycled mixture. Probably the most complex problem of recycling with drum mix plants is air pollution. Smoke should be eliminated and if dust is generated, it should be captured in either a wet wash system or a baghouse. Both of these systems work fine, although certain precautions must be taken with baghouses. Generally, all of the minus $P_{0.075}$ particles in the RAP material are coated and cannot absorb unburned fuel oil or light ends from asphalt as the virgin fines do. This results in a slow buildup of a sticky cake on the bags and these bags have to be replaced more often. To reduce this problem, highly efficient combustion should be obtained and high quality asphalt should be used which does not emit excessive light ends.

In an attempt to control this air pollution problem, some drum mix manufacturers have modified their plants to further prevent the RAP and/or asphalt binder from direct exposure to the burner flame. Some

drum plants utilize a coater box, located past the discharge chute to do this, while others use an inner and outer drum system to accomplish this objective. With the addition of a coater box to a drum plant, the RAP can be introduced further down in the drum and the asphalt binder can be added into the coater box. With the inner and outer drum system ("double barrel drum"), the RAP and asphalt binder are introduced between the two drums. Both of these methods will reduce pollution problems by reducing the amount of RAP and/or asphalt binder exposure to the heat source.

The RAP material is fed to the plant with a conventional cold feeder, although the bin should have a relatively small capacity with steep sides and a wide and long bottom opening for easy discharge and minimal sticking problems. To prevent further compaction of the RAP material, vibrators should not be used on the bin and the RAP should be fed slowly into the bin. Air cannons on the cold bin can satisfactorily prevent RAP consolidation. The belt or slat feeders used to transport the RAP to the weigh hopper or drum should be fairly wide and have sufficient horsepower to be used in a start-stop operation. The RAP feed system should be such that it will provide a good uniform flow of RAP to the mixer unit at all times.

NCDOT Specifications require that the RAP/RAS be automatically weighed and proportioned into the mix, whatever the type plant and/or method of RAP/RAS introduction being used. Batch plants that introduce the RAP into the weigh box accomplish this by simply weighing the RAP in the weigh box the same as it does the virgin aggregates. Batch plants which feed the RAP into the hot elevator, and all recycle drum mix plants normally will have a belt scale on both the RAP conveyor belt and the virgin aggregate conveyor belt which monitors the weights of these materials. These two belt scales <u>must be interlocked</u> to automatically adjust to the correct percentages. These belt scales should be checked <u>quarterly</u> to insure <u>0.5% accuracy,</u> and more importantly that the correct proportions of RAP/RAS and virgin aggregates are being maintained.

The amount of RAP/RAS which can be used in a recycled hot mix is controlled by:

1) the type plant being used;
2) the method of RAP/RAS introduction being used;
3) the desired grade of asphalt binder to be used;
4) the viscosity and penetration of the RAP/RAS asphalt binder;
5) the moisture content of the RAP/RAS;
6) the stockpile temperature of the RAP/RAS;
7) the temperature to which the virgin aggregate must be heated; and
8) the required temperature of the completed mix.

When recycled mixtures are being produced where more than one grade of asphalt binder is required, at least one tank will be needed for each grade of binder or the tank must be completely emptied before a different grade is added. ***Different grades of asphalt binder shall not be mixed***.

8.3 COMPOSITION OF RECYCLED HOT MIX ASPHALT (MIX DESIGN & JMF)

Article 610-3 and Subarticle 1012-1(F) of the NCDOT Standard Specifications addresses the requirements and policies concerning recycling of asphalt pavements (RAP). Subarticle 1012-1(E) of the NCDOT Standard Specifications addresses the requirements and policies concerning recycling of Reclaimed Asphalt Shingles *(RAS)*, Post-consumer RAS *(PRAS)* and Manufacturer-waste RAS *(MRAS)*. The

Contractor has the option to use a recycled plant mix in lieu of virgin plant mix. However, all provisions of the Specifications for virgin mixes apply to recycled mixes. This means that the same design criteria tests, test frequencies, and quality control requirements will apply. Use of reclaimed asphalt pavement materials is allowed on all standard plant mixes except Open Graded Asphalt Friction Course (OGAFC) mixes and Permeable Asphalt Drainage Course (PADC) mixes.

For Type RS9.5D and RS12.5D mixes, the maximum percentage of reclaimed asphalt material is 20% and the virgin asphalt binder shall be PG 76-22. For all other recycled mix types, the virgin binder PG grade is specified in Table 610-4 for the specified mix type. When the percentage RAP is greater than 30% of the total mixture, the Engineer will establish and approve the asphalt binder grade to be used.

TABLE 610-4
SUPERPAVE APPLICABLE VIRGIN ASPHALT GRADES

Mix Type	Percentage of RAP in Mix		
	Category 1[A]	Category 2[B]	Category 3[C]
	% RAP ≤ 20%	*21% ≤ % RAP ≤ 30%*	*% RAP > 30%*
All A and B Level Mixes, I19.0C, B25.0C	PG 64-22	PG 64-22	Established by Engineer
S9.5C, S12.5C, I19.0D	PG 70-22	PG 64-22	Established by Engineer
S9.5D and S12.5D	PG 76-22	-	-

A. Category 1 RAP has been processed to a maximum size of 2".
B. Category 2 RAP has been processed to a maximum size of 1" by either crushing and or screening to reduce variability in the gradations.
C. Category 3 RAP has been processed to a maximum size of 1", fractionating the RAP into 2 or more sized stockpiles.

Reclaimed asphalt shingle (RAS) material may constitute up to six (6) percent by weight of total mixture. When both RAP and RAS are used, do not use a combined percentage of RAS and RAP greater than 20% by weight of total mixture, unless otherwise approved. When the percent of binder contributed from RAS or a combination of RAS and RAP exceeds 20% but not more than 30% of the total binder in the completed mix, the virgin binder PG grade must be one grade below (both high and low temperature grade) the binder grade specified in Table 610-2 for the mix type. In the event the percent of binder contributed from RAS or a combination of RAS and RAP exceeds 30% of the total binder in the completed mix, the Engineer will establish and approve the virgin binder PG grade. Typically the contractor is required to perform additional binder testing on the RAP/RAS stockpiles to determine the characteristics of the final product being produced.

During the mix design process, the producer may use either blending charts or performance tests (e.g. dynamic modulus testing) to determine the appropriate PG grade of virgin binder to be used to give the overall performance characteristics desired. The Asphalt Design Engineer will approve the final grade of virgin binder to be used.

The JMF will indicate the total percentage of asphalt binder required for the mixture (by weight of total mixture), the actual binder grade to be used and the percentage to be added to the mixture as required above. The “Pay Item” binder grade for the mix will be as specified in Table 610-2 for the appropriate mix type.

Samples of the completed recycled asphalt mixture may be taken by the Department on a random basis to determine the PG grading of the recovered asphalt binder. If the grading is determined to out of

the specified range, the Engineer may require the Contractor to adjust the additional asphalt binder formulation and/or blend of reclaimed material to bring the grading within the desired range.

Anti-strip additives are required in all NCDOT Superpave mixes. Depending on TSR test results, different percentages may be necessary and will be indicated on the JMF. The minimum percentage is 0.25% liquid chemical additive (based on the percentage of new or additional binder) or 1.0% hydrated lime (by weight of total dry aggregate). The JMF will indicate the type, percentages, and sources to be used. See Section 4.8 for additional information. Should a change in the source of RAP/RAS be made, a new mix design and/or job mix formula may be required as outlined above.

8.4 PLANT CALCULATIONS AND CONTROL FOR RECYCLED MIXES

Depending on the type plant being used and the method of RAP introduction into the plant, some plant adjustments may be necessary in such areas as cold feed percentages and hot bin pull percentages.

The RAP is normally fed through a separate cold feed bin from the series of bins handling the virgin aggregates. Because of this, the blend percentages shown on the JMF can not be used in setting and/or checking virgin cold feed bin percentages alone. A recalculation of the virgin aggregate percentages, excluding the RAP aggregate, must be performed. These percentages can be used for setting and checking the virgin aggregate blend by itself. The RAP cold feed percentage is then controlled by either weighing in the correct percentage into the weigh box, or by use of interlocked RAP and virgin belt scales which automatically proportions the correct RAP/Virgin percentage. This depends on the type plant and method of RAP introduction being used.

During production of a recycled mixture, adjustments in the virgin aggregates blend percentages shown on the JMF are occasionally needed; however, the % RAP, % RAS and % Additional binder shall not be changed without the specific approval of the Asphalt Design Engineer or his representative.

Since drum mix plants do not have hot bins, naturally there will be no hot bin pull percentage adjustments necessary. The recycled mix gradation is controlled by the cold feed bin percentages and the aggregate (virgin and RAP) gradations. Neither will there be any hot bin percentage adjustments at a batch plant where the RAP is fed into the hot elevator. Since the RAP passes over the hot bin screens, along with the virgin aggregates, and is sized into different hot bins with the virgin aggregates, the hot bin pull percentages will be computed the same as for a virgin mix. Batch plants that incorporate the RAP into the mix by weighing it directly into the weigh box will require some adjustments to the hot bin pull percentages. The virgin aggregate batch weight must be reduced by the RAP batch weight and the hot bin percentages adjusted based on the effective gradation yield of the RAP. The virgin aggregate batch weight is calculated by subtracting the total of the percent aggregate of mix in the RAP, the percent binder of mix in the RAP, and the percent new binder, from the total batch weight of the mix. The hot bin pull percentages are then determined in the same manner as outlined for virgin mixes, except that the effective gradation yield of the RAP must be considered before determining these percentages. The effective gradation yield of the RAP is computed by multiplying the percent of RAP aggregate only in the mix times the gradation of the RAP. This effective gradation yield will be provided into the mix in addition to the virgin aggregate gradation, which is controlled by the hot bin pull percentages. Therefore, this effective yield gradation of the RAP must be deducted from the desired JMF gradation requirements prior to determining the virgin aggregate hot bin pull percentages. When determining these percentages using this method, the figures derived will include both the virgin aggregate and the RAP. It may then be necessary to convert the virgin percentages to equivalent percentages for virgin aggregate only. This would be done simply by totaling the virgin aggregate percentages and dividing each individual percentage by that total. This conversion is necessary

because the virgin aggregate batch weight is separate from the RAP batch weight and the combined virgin aggregate gradation can be better controlled by this method. The hot bin batch weights are then computed by multiplying the virgin aggregate hot bin percentages times the virgin aggregate batch weight. The RAP and new binder in the mix will be computed separately by multiplying those percentages times the total batch weight of the mix. The scales settings will be accumulative with the virgin aggregate and RAP weight set on the aggregate scales and the new binder weight set on the binder scales.

The QC technician is responsible for determining Hot Bin pull weights. QC technicians should refer to Section 7 of this manual for allowable adjustments in blended aggregates and Hot Bin pull percentages.

8.5 QUALITY CONTROL, HANDLING AND PROCESSING OF RAP AND RAS MATERIALS

Recycled mix quality is directly dependent on the RAP/RAS quality, handling and processing. Only uniform, good quality reclaimed asphalt materials should be used in recycled mixes. The RAP/RAS stockpiles should not be used as disposal sites for all types of unwanted materials. Good quality control is needed to keep contaminants in the RAP/RAS material to a minimum. Prior to stockpiling the RAP/RAS, the area should be cleared and leveled to provide a firm and level base. As with different types of aggregates, each different type of RAP/RAS material should be stockpiled separately. The lowest stockpile height that space will permit should be used and vehicle operation on the RAP/RAS stockpiles should be kept to a minimum to prevent consolidation. While not a specification requirement, it is highly recommended that the RAP/RAS stockpiles be covered to keep the material as dry as possible so that less fuel is needed to evaporate the excess moisture.

The RAP/RAS material should be pre-screened before crossing the belt scales on a drum plant or modified batch plant, or before entering the weigh box in a batch plant. The quality control requirements become more stringent as the amount of recycled content increases. When the percentage of RAP exceeds 30% of the mix, it is expected that approved RAP stockpiles will be constructed and testing will be performed to determine the gradation, asphalt content, and binder characteristics of the stockpile. The material and testing requirements are detailed in Table 610-4

It is the Contractor's responsibility to monitor the RAP/RAS stockpiles and verify that the gradation and asphalt content of the RAP/RAS being used is consistent and reasonably close to that of the RAP/RAS used when the recycled mix was originally designed. Recycled mixes are originally designed using samples of RAP/RAS stockpiles that the Contractor has on-hand at that time. These mix designs are considered current and may be usable for several years provided the RAP/RAS remains reasonably consistent and mix quality can be maintained. Although the Contractor's RAP/RAS source may change numerous times during that period, it would be almost impossible and very impractical to redesign these recycled mixes each time the RAP/RAS source changes. The primary concern should continue to be that of maintaining mix quality.

Certain QC field tests <u>must</u> be performed on RAP/RAS stockpiles (See Section 609-5 of the Standard Specifications). Once a stockpile of RAP/RAS has been sampled and these samples used in the mix design process, no other new source of RAP/RAS should be introduced into that same stockpile <u>without prior testing</u>. If the RAP/RAS is from a source other than the mix design source, testing must be performed to verify possible use in an existing job mix formula (JMF). Refer to Table 1012-4 of the Standard Specifications for new source RAP field binder content and gradation tolerances. RAP/RAS from the same source may continue to be placed into that stockpile. Normally this means that a different source of RAP/RAS should be stockpiled separately and tested prior to its use, provided there is a sufficient quantity of RAP/RAS to justify a separate stockpile. It is permissible to combine RAP/RAS from different

sources, provided that it is processed and/or uniformly blended during stockpiling and prior to its sampling and testing.

If a Contractor desires to use a new source RAP in an existing recycled mix, he shall submit data on the gradation and binder content to the Department's QA Supervisor. The QA Supervisor may elect to run his/her own gradation and binder content test on the RAP. If the gradation and binder content are within the specified tolerances given in Table 1012-4, the QC technician may use the new source RAP in a mix subject to satisfactory volumetric tests results on the mix. Once mix production begins, normal random sampling of the mix shall be done. If a new source RAP stockpile is approved for use, the QC technician will perform binder content and gradation tests weekly to verify that it meets the requirements of Table 1012-4. This procedure applies to all recycled mixes. All required tests shall be performed. If these test results meet the Specification requirements for the existing JMF, the new source RAP may continue to be used in the mix. If any of these test results are unsatisfactory, the QC technician shall contact the QA Supervisor.

If the QC gradation and/or binder content is not within the specified tolerances of Table 1012-4, the Asphalt Design Engineer should be notified. The QA Supervisor may investigate to determine if the QC test results are correct. A new mix design may possibly be required prior to any further use of RAP that doesn't meet requirements of Table 1012-4. The Asphalt Design Engineer will make this determination.

TABLE 1012-4
NEW SOURCE RAP GRADATION AND BINDER TOLERANCES
(Apply Tolerances to Mix Design Data)

	0 - 20 % RAP			**20 - 30 % RAP**			**> 30 % RAP**		
Pb, %	+/- 0.7%			+/- 0.4%			+/- 0.3%		
Sieve Size, mm	**Mix Type**			**Mix Type**			**Mix Type**		
	Base	**Inter.**	**Surf.**	**Base**	**Inter.**	**Surf.**	**Base**	**Inter.**	**Surf.**
25.0	+/-10	-	-	+/-7	-	-	+/-5	-	-
19.0	+/-10	+/-10	-	+/-7	+/-7	-	+/-5	+/-5	-
12.5	-	+/-10	+/-6	-	+/-7	+/-3	-	+/-5	+/-2
9.50	-	-	+/-8	-	-	+/-5	-	-	+/-4
4.75	+/-10	-	+/-10	+/-7	-	+/-7	+/-5	-	+/-5
2.36	+/-8	+/-8	+/-8	+/-5	+/-5	+/-5	+/-4	+/-4	+/-4
1.18	+/-8	+/-8	+/-8	+/-5	+/-5	+/-5	+/-4	+/-4	+/-4
0.300	+/-8	+/-8	+/-8	+/-5	+/-5	+/-5	+/-4	+/-4	+/-4
0.150	-	-	+/-8	-	-	+/-5	-	-	+/-4
0.075	+/-4	+/-4	+/-4	+/-2	+/-2	+/-2	+/-1.5	+/-1.5	+/-1.5

NOTE: Tolerances shall be applied to the RAP gradation shown on the mix design currently being used (M&T Form 601). New source RAP sampled and tested within these tolerances may be used in an existing JMF subject to satisfactory Gyratory and maximum specific gravity test results on the new mix.

For RAS Stockpiles, if the gradation and binder content are within the specified tolerances given in the New Source RAS Binder and Gradation Tolerances Table (Table 1012-2), the QC technician may use the new source RAS in a mix subject to satisfactory volumetric test results on the mix. Once mix production begins, normal random sampling of the mix shall be done. If a new source RAS stockpile is approved for use, the QC technician will perform binder content and gradation tests weekly to verify that it meets the requirements of the New Source RAS Gradation and Binder Tolerances Table.

TABLE 1012-2
NEW SOURCE RAS BINDER and GRADATION TOLERANCES
(Apply Tolerances to Mix Design Data)

P_b %	**± 2.5**
Sieve Size (mm)	*Tolerance*
4.75	±5
2.36	±4
1.18	±4
0.300	±4
0.150	±4
0.075	±2.0

Subarticle 1012-1(E) of the NCDOT Standard Specifications addresses the requirements and policies concerning recycling of Reclaimed Asphalt Shingles *(RAS)*, Post-consumer RAS *(PRAS)* and Manufacturer-waste RAS *(MRAS)*.

8.6 COMPENSATION FOR RECYCLED HOT MIX ASPHALT PAVEMENTS

Current NCDOT Specifications allow a Contractor to furnish a recycled mixture in lieu of a standard virgin mixture, unless otherwise stated in the contract. It should be noted that the contract line code bid items do not distinguish between recycled mixes and standard mixes. Payment for a given type of mix will be at the same unit prices for both mixture and asphalt binder, regardless of whether or not a recycled mixture is used. This method of payment for the mix is used with the assumption that if a Contractor plans to use recycled mixes on a project, he will submit a cheaper bid price than if using virgin mixes, which should result in a cost savings to the Department.

Payment for asphalt binder in recycled mixes will include the total quantity of virgin and reclaimed asphalt binder. The quantity to be paid for will be the theoretical number of tons (metric tons) of the grade of asphalt binder required by the applicable job mix formula based on the actual number of tons (metric tons) of plant mix completed and accepted on the job. The theoretical number of tons (metric tons) will include additional new asphalt binder, salvaged asphalt binder from the reclaimed asphalt pavement material, and salvaged asphalt from the reclaimed shingle material.

Unless otherwise agreed to in writing, the grade of binder to be paid for will be the grade specified for that mix type in Table 610-3 regardless of the grade actually used due to use of higher percentages of RAP. For example: The contract requires a S9.5C mix type. For S9.5C mix, 610-3 specifies a PG 70-22 binder be used. The Contractor elects to use 25% RAP in the mix. The contractor must now lower the virgin binder grade actually used to PG 64-22 in accordance with Table 610-4. However, the Contractor will be paid at the contract unit bid price for PG 70-22.

Any price adjustments made to the asphalt binder unit bid price due to binder price fluctuations will be applied only to the theoretical number of tons of virgin asphalt binder materials required by the job mix formula. All price adjustments will be based on grade PG 64-22 average FOB selling prices, regardless of grade used or required.

No separate payment is made for anti-strip additive. Compensation is considered incidental to the mix and/or binder price.

8.7 MILLING OF ASPHALT PAVEMENTS

Section 607 of the Standard Specifications addresses Asphalt Pavement Milling. It is important to understand that milling (pavement removal) is a separate entity from hot mix recycled pavements. Milling may or may not be done in conjunction with the production of a recycled mixture. Also, milled pavements may or may not be overlaid with a recycled hot mix. The connection between the two is that the RAP from a milling operation may be used in a recycled mix, within certain restrictions. The purpose of milling is not necessarily that of producing RAP solely for use in recycled pavements. The purpose(s) may include other factors and objectives as discussed below.

Section 607 of the NCDOT Standard Specifications covers milling of asphalt pavements; however, very often milling is covered by project special provisions in contracts. These project special provisions should always be checked since the method of measurement and payment may be different from the Standard Specifications.

When existing asphalt pavement is to be removed, the removal may be done by cold milling with equipment ("milling machine") that has been designed and built exclusively for pavement milling operations. There are many advantages of milling versus other pavement removal methods. The pavement can be removed quickly with minimum interruption to traffic flow and in some cases the restored pavement can be opened immediately to traffic. Milling is a safe system that involves very few hazardous obstructions in the roadway and is relatively pollution free. The removal of asphalt pavement by milling is not limited to interstate or primary highways, but is also affordable by cities and smaller communities as well as Federal and State agencies. The milling procedure consumes substantially less energy than other methods of pavement removal and the removed material can usually be used again without further processing.

Milling can correct several pavement problems while saving time and money by not having to adjust adjacent structures or geometric designs. Some of the problems which can be corrected by milling are rutting, washboarding, pushing, shoving and bleeding of asphalt pavements. Milling improves the texture for bonding of additional asphalt pavements and retains guard rail heights, curb heights, and bridge clearances. On multi-lane highways, the distressed lane can be milled with limited inconvenience to the traveling public. Also, the desired profile and cross-sections or roadways can be restored so that drainage systems can function properly.

The specifications require the use of milling machines equipped with an electronic control system which will automatically control the longitudinal profile and cross slope of the milled pavement surface through the use of a mobile grade reference(s), an erected string line(s), joint matching shoe(s), slope control systems, or other methods or combination of approved methods. An erected fixed stringline must be used when required by the contract. Unless stated otherwise, a mobile grade reference system capable of averaging the existing grade or pavement profile over a minimum 30 foot distance or by non-contacting laser or sonar type ski systems with at least four referencing stations mounted on the milling machine at a minimum length of 24 feet must be used. Locate the position of the grade control system such that the grade sensor is at the approximate midpoint of the mobile reference system.

A machine capable of leaving a uniform surface suitable for handling traffic without excessive damage to the underlying pavement structure must be used. Use a milling machine and other loading equipment capable of loading milled material to be used in other parts of the work without excessive segregation.

The existing pavement must be milled in a manner which will restore the pavement surface to a uniform longitudinal profile and cross section in accordance with typical sections shown in the plans. Where indicated in the plans or project special provisions, remove pavement to the specified average depth and specified cross slope. Establish the longitudinal profile of the milled surface by a mobile reference system on the side of the cut nearest the centerline of the road. Establish the cross slope of the milled surface by an automatic cross slope control mechanism or by a second skid sensing device located on the opposite edge of the cut. The Engineer may waive the requirement for automatic grade and/or cross slope controls where conditions warrant.

Thoroughly clean the milled pavement surface of all loose aggregate particles, dust, and other objectionable material. Disposing or wasting of oversize pieces of pavement or loose aggregate material will not be permitted within the right of way.

Pavement removal operations must be conducted in a manner that effectively minimizes the amount of dust being emitted. Plan and conduct the operation so it is safe for persons and property adjacent to the work, including the traveling public.

SECTION 9

ROADWAY PAVING OPERATIONS

9.1 INTRODUCTION

This section of the manual addresses hot mix asphalt paving operations, including planning, equipment requirements, spreading and finishing operations, compaction operations, and other related subjects. Also included are sections on the use and application of prime coats and tack coats. In this section we primarily discuss the actual construction operations. The following section of the manual will give more detail on the required sampling and testing requirements and procedures.

The Department and the Contractor are required to both have a QMS certified Roadway Technician with each paving operation on the project at all times that mix is being placed. During paving operations, the Department's certified QMS Roadway Technician has three primary responsibilities. These are:

(1) to be certain that contract specifications are met,
(2) to provide the Contractor every opportunity to meet the job specifications in the most cost-effective manner, and
(3) Assist the contractor's QMS roadway technician in monitoring traffic control.

Likewise, the Contractor's certified QMS Roadway Technician has the responsibilities of:

(1) monitoring all roadway paving operations;
(2) monitoring all quality control processes and activities, to include stopping production or implementing corrective measures when warranted; and
(3) ensuring that the specifications are being met, that a high standard of workmanship is being achieved, that the required sampling and testing is being performed and traffic control devices are being used and maintained properly.

When these responsibilities are met by both parties, the public is literally guaranteed a pavement that will perform satisfactorily for a reasonable period of time. Meeting these responsibilities also ensures cooperation between the Contractor and the Department, which is essential for the construction of a quality pavement.

To meet these responsibilities, the Contractor and Department personnel must have a courteous, cordial, cooperative, and professional relationship with each other. All Supervisors, Technicians, and other involved parties must thoroughly understand the job specifications. They must be familiar with the equipment necessary to perform all phases of the paving operations and be knowledgeable of proper use of the equipment required.

Before beginning paving, the certified Asphalt Roadway Technician for both the Department and the Contractor must assure that the subgrade or base course is properly conditioned and true to grade and cross section as shown on the plans before paving operations begin. Prime coat must be applied when required in accordance with Article 600 of the Standard Specifications. In addition, tack coat must be applied when required in accordance with Article 605 and procedures detailed in this Manual. We will first discuss the placement of prime coats, next, the application of tack coats, followed by the placement of the asphalt mix. The Technicians, for both the Contractor and the Department, must be familiar with all aspects of quality paving practices if long lasting pavements are to be constructed.

9.1.1 The Asphalt Distributor

The asphalt distributor is one of the most important pieces of equipment on a paving project, prime coat, tack coat, or surface treatment operation (See Figure 9-1). It is made specifically to apply liquid asphalt material uniformly and in proper quantities to a roadway surface. (See Article 600-5 of the Standard Specifications for distributor requirements). The asphalt distributor includes a truck or trailer-mounted insulated tank containing a heating system that is normally oil-fired to maintain the asphalt at the proper application temperature. An accurate thermometer must be mounted on the distributor in such a manner that the dial or indicator remains in full view at all times. The distributor shall include a spray bar system capable of uniformly applying the material and a hand-held spray attachment for applying asphalt to areas inaccessible to the spray bars.

Asphalt sprayed at an improper temperature may not be applied uniformly and this is sometimes hard to detect until months later when streaking and grooving may develop. The distributor has a power driven pump capable of handling asphalt products ranging from light, cold application liquid to heavy asphalt binders, heated to spraying viscosity.

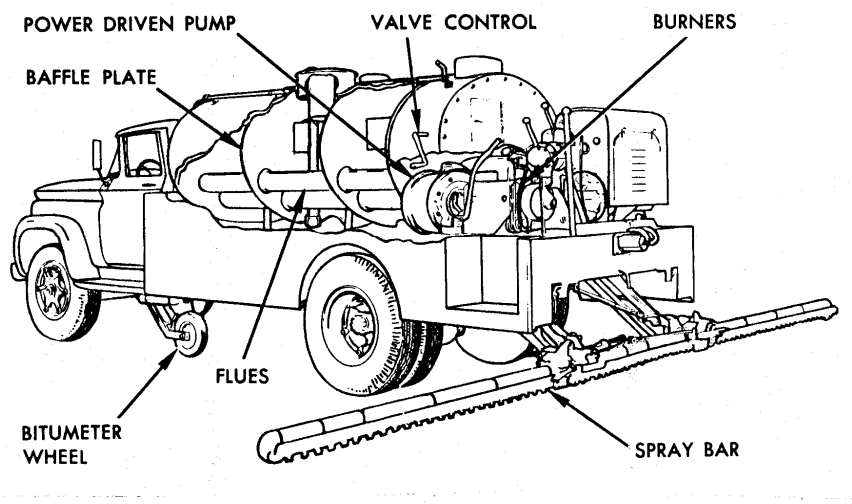

Figure 9-1
Asphalt Distributor

At the rear-end of the tank is a system of spray bars and nozzles through which the asphalt is forced under pressure onto the surface of the road. The spray bar must have a constant uniform pressure along its entire length for equal output from all nozzles. Although the methods of maintaining pressure may vary, many distributors use gear type pumps to deliver the asphalt to the spray bar. On some distributors, pressure is regulated by a variable speed pump, while on others by constant pump speed and use of a pressure relief valve. The correct pressure is that which neither atomizes the asphalt nor distorts the fan of spray. Low pressure results in streaking from a non-uniform discharge of material from the individual nozzles, while excessively high pressure will atomize the asphalt and distort the spray fan. The manufacturer normally supplies charts and data which gives the proper pump speed or pressure for determining the discharge in gallons (liters) per minute for each nozzle size.

One of the most important parts of the distributor is the spray bar. To achieve proper results from the spray bar, the correct size nozzles for the job conditions must be selected. Nozzles should be checked for damage before use. The angle of the long axis of the nozzle openings must be adjusted so that the fans of spray will not interfere with each other. The nozzle angle varies according to the make of distributor, but is usually between 15° and 30°. It is important th at all nozzles be set at the proper angle

within close tolerances to provide proper overlap. In addition to a proper and uniform nozzle angle, the most important adjustment to insure uniformity of asphalt spray is the height of the spray bar above the pavement surface. It is important that the correct height be maintained during the entire application to provide proper overlap. An incorrect height of spray bar will result in streaking. For example, the best result with a 4" (100 mm) nozzle spacing comes from an exact triple lap of the fans, but with the 6" (150 mm) nozzle spacing, the height of the spray bar is too high and subject to wind distortion. In such a case, a double lap pattern should be used. For best results, the height of the spray bar should not vary more than 1/2" (13 mm). Some distributors have mechanical controls to maintain proper height.

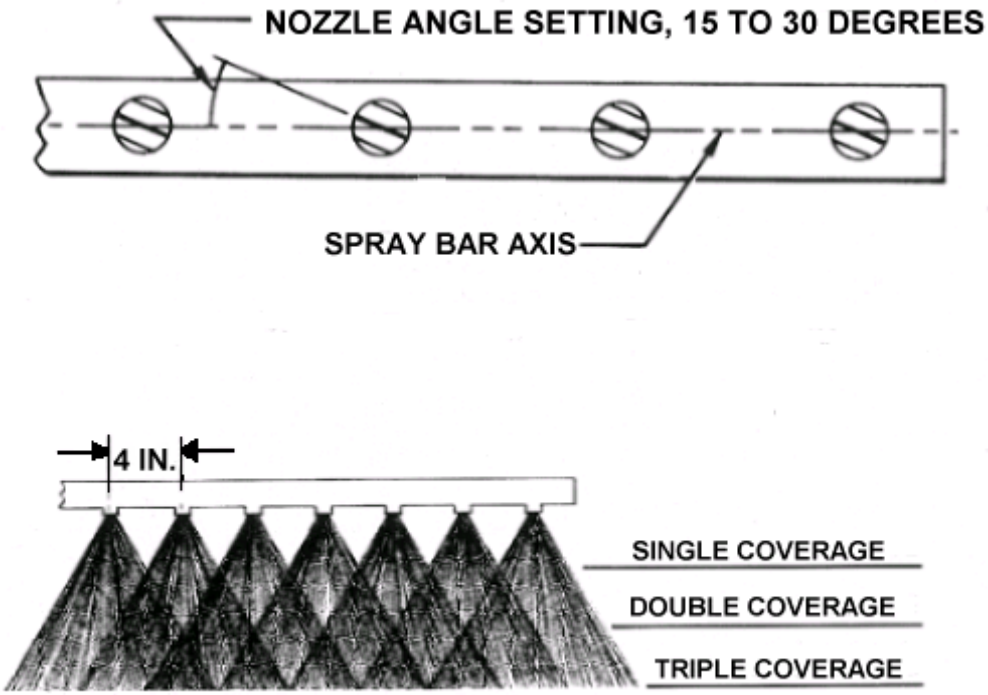

Proper Nozzle Angle Setting
Figure 9-2

Controls for the distributor include a pressure gauge (which registers pump out-put) and odometer (which registers distance traveled in rate of travel). The odometer has connected to it a rubber tired wheel mounted on a retractable frame with a cable leading to the odometer dial in the cab of the vehicle. The rate of travel in feet (meters) per minute and the total distance traveled in feet (meters) are indicated on the dial. The odometer should be checked for accuracy and cleanliness at regular intervals.

Newer distributors usually have float type gauges and measuring sticks for indicating the volume of the contents of the tank. The stick used should be calibrated so that tank contents can be determined to the nearest 25 gallons (100 liters). The calibration stick, chart, and the tank should have matching numbers. Calibration charts or devices must be kept with the distributor at all times.

9.1.2 Asphalt Delivery Tickets for Emulsified Asphalt

When a shipment of asphalt emulsion that is to be used as either prime or tack coat is received at an asphalt plant or on a project, a copy of the bill of lading will be furnished to the appropriate Resident Engineer and retained in their project records. When receiving asphalt emulsion, follow these guidelines:

1) Verify source of tack coat on Bill of Lading (BOL) as coming from terminal on approved NCDOT list
2) Verify that BOL contains NCDOT assigned batch numbers. (First two numbers are the Approved Asphalt Terminal (AT) number)
3) Obtain a copy of the BOL for every shipment and include it with the materials received report (MRR) for each project. Note that in most cases, one BOL may represent several distributor truck loads, since many Contractors have tankers shipped to central locations and fill distributor trucks from the tanker.
4) BOLs may be obtained from the Contractor's project personnel on site or may be sent from plant personnel managing the tack shipment directly to the Reesident Engineer's office. Arrangements for obtaining the BOL should be discussed prior to beginning work.
5) Confirm that all approved suppliers have an asphalt terminal (AT) number.
6) Confirm that BOL has supplier and transporters certifications recorded.
7) Create a record of net gallons delivered to the project.
8) Confirm that approved grade of material is recorded on BOL.
9) If BOL is lacking any required information, then decline that tack on the project until BOL is corrected.
10) For more detailed information refer to M&T Unit's "*Asphalt Emulsion Receiving Guide*" at the following website:

    https://connect.ncdot.gov/resources/Materials/MaterialsResources/Asphalt%20Emulision%20Receiving%20Guide.pdf

9.2 PRIME COAT

Prime Coat is a sprayed application of a low viscosity liquid asphalt to a base course of untreated material. It is the initial incorporation of asphalt into the surface of a non-asphalt base course preparatory to any superimposed treatment or construction. The objective of priming a non-asphalt base may be any one or all of the following:

(1) To waterproof the surface in order to prevent surface water from penetrating the base course or subgrade material.

(2) To seal voids, coat and bond loose mineral particles and stabilize the surface being primed.

(3) To provide temporary covers in cases of delayed pavement construction or planned stage construction.

(4) To promote adherence of overlying asphalt courses or surface treatments to granular bases, including both ABC and soil type bases.

Prime will be applied to a non-asphalt base beneath an asphalt plant mixed pavement when required by the Project Special Provisions. Generally, prime is needed when any surface layer of asphalt pavement is being placed directly on an aggregate or soil base. If prime is not specified in the contract when a surface layer is to be placed directly on aggregate or soil base, consideration should be given to adding a prime coat. Prime required by the Project Special Provisions or Specifications may not be eliminated nor the grade of asphalt material specified changed (if specified) without the specific approval of the State Roadway Construction Engineer or his representative.

9.2.1 Grades, Application Rates and Temperatures for Prime Coats

All Prime Coat materials must meet the requirements of Article 1020-5 of the Standard Specifications. This Article does not list any specific brands or grades of materials. A particular brand or grade must be approved prior to use. A listing of approved prime coat materials is maintained by the Materials and Test Unit's NCDOT website under "Approved Products List - Prime Coat". Those parties who may not have access to this listing may contact the Chemical Engineer at the Materials & Tests Unit at phone number 919-329-4090 or may visit their approved products web site located at https://apps.dot.state.nc.us/vendor/approvedproducts/.

All currently approved prime coat materials are emulsified asphalts that have been pre-thinned with water. Due to the Department's concerns about the environment, the use of cut-back asphalt (ones pre-thinned with another petroleum product) has been phased out and are not included on the approved material listing. Unless the project special provisions specify that a particular prime coat material be used, the Contractor may select any grade from the approved list.

Prime coat will be uniformly applied at a rate of 0.20 to 0.50 gallons per yd^2 (0.9 to 2.3 liters per m^2) or as noted on the approved list. The exact rate for each application will be established by the Engineer to 0.01 gallons per yd^2 (0.1 liters per m^2) and will be conveyed to the Contractor prior to application. The required rates of asphalt materials will be based on the volume of material measured at the application temperature. The application temperature of the prime coat material shall be in accordance with the manufacturer's recommendations or as approved by the Engineer.

The asphalt distributor is the piece of equipment used to apply prime coat material (See Section 9.1.1). Most distributors include gauges for measurement of the material within the tank. These may be used to determine the quantity used provided they are accurate. It is also acceptable for the Technician to "strap" the tank with a calibrated measuring stick having increments of 25 gallons (100 liters) or less. Each distributor must either be measured by the gauge or "strapped" with the stick before and after a "shot" in order to estimate the actual number of gallons (liters) to the nearest 10 gallons (50 liters) applied. When sticking the tank, the measurements must be made from the same spot on the rim along the centerline of the truck on the top opening with the tank level both times. The tank should always be level when measured, whether measured with the gauge or the stick.

The Roadway Technician should always check the amount of asphalt material applied against the amount received for each tanker load. The amount applied obviously cannot be more than the amount received.

The directed rate of application and the actual rate of application of the prime coat will be recorded in the Pay Record Book.

APPROVED MATERIALS FOR PRIME COAT APPLICATIONS*

Product Name	EA-P**	CMS-PX**	EA-P**	EPR-1(Diluted)
Manufacturer's Name	SEACO, Inc. AT26	Hammaker East AT8	Asphalt Emulsion AT13	Hammaker East AT8
Telephone Number	(800) 729-5335	(336) 292-6875	(910) 230-3640	(336) 292-6875
Shipping Point	Columbia, SC	Greensboro, NC	Dunn, NC	Greensboro, NC
Application Temperature	120 - 130°F	150°F	110 - 130°F	110°F
HiCAMS Vendor Code	NP94-895	NP99-3662	NP02-4032	NP07-4758
Abbreviation Description	Emulsion Asphalt Prime	Cationic Medium Set - polymer	Emulsion Asphalt Prime	Emulsion Prime (Diluted)

*The most current listing of approved Prime Coat Materials is on the Materials & Tests Unit's website under "Approved Products List-Prime Coats"

https://connect.ncdot.gov/resources/Materials/MaterialsResources/Approved%20Product%20List%20For%20Prime%20Coat%20Emulsions.pdf

Application rate of 0.20 to 0.50 gal/sy (0.90 to 2.25 L / sq. meter) as established by the Engineer

9.2.2 Application of Prime Coat

Prime coat shall be applied only when the surface to be treated is free of standing water, at proper moisture content, and the atmospheric temperature in the shade away from artificial heat is 40°F (4°C) or above for plant mix and 50°F (10°C) or above for asphal t surface treatment. Prime shall not be applied on a frozen surface or when the weather is foggy or rainy. The base shall be cleaned of any objectionable material or other deleterious matter prior to placing prime coat.

Prime coat should not be applied until the base to be treated has been approved by the Engineer. Requirements include approval by the laboratory of aggregates used in base courses, adequate density, proper grade and proper conditioning of the base material on which the prime is to be applied.

If in the opinion of the Resident Engineer or his Technician, the surface of the base has dried to such an extent that the surface dust will cause "dust bubbles" or "frog eye" in the prime coat, the Contractor will be required to dampen the base surface prior to application of the asphalt material. Care must be taken to uniformly dampen the surface without over wetting small areas. This dampening of the surface causes a greater and more uniform penetration of the prime coat material into the base course and should be done if the "frog eye" effect mentioned above is evident.

After the base has been conditioned in an acceptable manner and is sufficiently dry, a stringline shall be placed by the Contractor and checked by the Technician to serve as a guide for the distributor. The use of a stringline may be waived by the Resident Engineer if prime is to be placed adjacent to a curb and gutter or other structure where a true alignment can be obtained.

For best application results, the following points should be observed.

(1) Maintain uniform pressure on all spray nozzles. The fan of spray from each nozzle must be uniform and set at the proper angle with the spray bar (See Figure 9-2).
(2) The spray bar must be maintained at the proper height above the road surface to provide complete and uniform overlap of the spray fans.

(3) The distributor road speed must be uniform.

(4) Before the start of the work the spread of the distributor spray bars should be checked. The spraying operation should be checked frequently to be sure that the nozzles are the proper height from the road surface and are working fully.

(5) When prime is to be utilized adjacent or parallel to bridge floors, curbs, handrails and all other appurtenances, care must be taken to prevent spraying, splattering, or tracking the prime on the structures.

The prime coat should be allowed to thoroughly penetrate the base as recommended by the manufacturer (minimum 24 hours) before any traffic is permitted upon it. If at the end of the curing period there remains spots of excess asphalt on the road's surface, the Resident Engineer may require such spots to be hand broomed or blotted with aggregate to prevent the prime from being picked up. When there are spots that have excess asphalt or for some other reasons the asphalt fails to penetrate the base, hand-brooming or spreading of granular material may be necessary. Granular material required to blot excess prime material applied due to the Contractor's negligence or convenience will be at his expense.

To insure a tight and smooth base, the Engineer may require that the prime be rolled with pneumatic rollers as soon as the prime has penetrated the base enough to prevent it from picking up. Before beginning placement of any surface treatment or plant mix, all the water must have evaporated and all loose granular material swept from the base.

If in the opinion of the Resident Engineer it is impracticable to keep traffic off the prime, the Contractor may be directed to spread blotting sand over the prime coat to prevent it from being picked up, in accordance with Section 8l8 of the Standard Specifications.

9.2.3 Determination of Prime Coat Rates and Pay Quantities

The procedures, which follow, serve as a guide by which rate applied and pay quantities for prime coat, curing seal and other similar asphalt items will be computed and recorded.

The quantity of prime coat and curing seal to be paid for will be measured at the application temperature. The pay records must indicate the actual computed rate for each shot. The quantity of prime coat to be paid for will be the actual number of gallons (liters) of prime coat material satisfactorily placed on the roadway.

EXAMPLE CALCULATION OF PRIME COAT RATE AND PAY QUANTITY

945 gals. (3577 liters) of EA-P was applied 12 ft. (3.6 m) wide from Sta. 125+30 to 144+00 (38+19 to 43+89). The Engineer directed a rate of 0.35 gals./yd^2 (1.6 liters/m^2). Compute actual rate applied.

English Units

$$\text{Rate of Application} = \frac{\text{No. Gals. Used}}{\text{No. Sq. Yds. Primed}} = \frac{\text{Gals.}}{\text{Sq. Yd.}}$$

For Rectangular Area:

Length = Ending Sta. - Beginning Sta. = 144+00 - 125+30 = 1870 L.F.

$$\text{Rate of Application} = \left(\frac{\text{No. Gals. Applied}}{\dfrac{\text{Length (ft.) x Width}}{\text{9 sq. ft. / sq. yd.}}} \right) = \left(\frac{945}{\dfrac{\text{1870 ft. x 12 ft.}}{\text{9 sq. ft. / sq. yd.}}} \right) = 0.379 \text{ gals/sq.}$$

Say: 0.38 gals/sq. yd.

Actual Pay Gallons = 945 gals.

Metric Units

$$\text{Rate of Application} = \frac{\text{No. Liters Used}}{\text{No. Sq. Meters Primed}} = \frac{\text{Liters}}{\text{Sq. Meters}}$$

For Rectangular Area:

Length = Ending Sta. - Beginning Sta. = 43+89 - 38+19 = 570 meters

$$\text{Rate of Application} = \frac{\text{No. Liters}}{\text{Length (meters) x Width}} = \frac{\text{3577 Liters}}{\text{570 m x 3.6}} = 1.743 \text{ Liters / sq. meter}$$

Say: 1.74 Liters/sq. meter

Actual Pay Gallons = 3577 Liters

NOTE : Significant Decimal for Prime Coat Rate is 0.01

9.3 TACK COATS

A tack coat is the spray application of liquid asphalt to an existing asphalt or concrete surface to promote a bond between old pavement surfaces and the new asphalt layer. The four essential requirements for a satisfactory tack coat application are:

(1) Existing pavement surface must be thoroughly cleaned.
(2) Proper rate of application must be assured. (See Section 9.3.2 below for application rates)
(3) Uniform coverage over the entire area to be paved must be assured.
(4) Allow tack to thoroughly break before placing the new asphalt layer.

Tack coat must be applied beneath each layer of asphalt plant mix to be placed. Where a prime coat or a newly placed asphalt surface treatment mat coat (AST) has been applied, it is normally not necessary to tack. (See Section 9.3.3 for other possible exceptions) The Specifications allow tack coat to be applied only when the surface is dry and when the air temperature is 35°F (1.7^{o}C) or above in the shade away from artificial heat. Surface preparation is the key to a good tack coat. Cleanliness of the existing asphalt or concrete surface cannot be overly stressed. Any dust, dirt, clay, fuel oil, grass, or other foreign matter on the surface will prevent the tack coat from adhering to the surface, causing the overlay layer not to be bonded and therefore, must be removed. This debris could cause it to "slip" or "shove" under rolling or traffic. Oftentimes, this cleanliness can only be achieved with power brooms and/or by flushing with water and scrubbing. The Technician must assure that all areas are properly cleaned and tacked before the pavement layer is placed.

The Contractor must remove the grass, dirt and other material from the edge of the existing pavement prior to placement of the tack coat. This is important since this will prevent the bonding of the asphalt overlay. However, the Contractor should be cautioned about removing excessive amounts of grass and earth material from the pavement edge. This operation should not be conducted in a manner which allows the material to be thrown into the roadway ditches or which creates a hazardous traffic condition.

The Contractor should take necessary precautions to limit the tracking and/or accumulation of tack coat material on either existing or newly constructed pavements. Excessive accumulation of tack may require corrective measures.

To assist internal and external field personnel with proper tack coat operations and guidelines, a “Tack Coat – Best Practices Field Guide” was developed in 2012 and can be found at the following weblink:

https://connect.ncdot.gov/projects/construction/Documents/Tack%20Coat%20Best%20Practices%20Field%20Guide%202012.pdf

9.3.1 Tack Coat Grades

All tack coat materials shall meet the Standard Specification requirements and will be either Asphalt Binder, Grade PG 64-22 or Asphalt Emulsion, Grade RS-1H, CRS-1H, CRS-1, HFMS-1 or CRS-2 unless otherwise approved by the Asphalt Design Engineer. **Asphalt Emulsions shall not be diluted with water**. Different grades must not be intermixed in a tanker or distributor since this can cause the material to break in the tank and become almost impossible to spray.

"Non-Tracking" asphalt tack coats may be used at the Contractor's option based on a new special provision. The Contractor can select from various non-tracking tack coat products from an approved list maintained by the Materials & Tests Unit.

https://connect.ncdot.gov/resources/Materials/MaterialsResources/Approved%20Non-Tracking%20Tack%20Coat%20Products%20for%20NC.pdf

Unless otherwise specified in the Project Special Provisions, the Contractor may select the grade of tack coat material he anticipates using. Any approved grades may be used provided the material is accompanied by a certified delivery ticket in accordance with Article 1020 of the Standard Specifications. The Contractor will advise the Roadway Technician of the actual brand and grade being used and the QA Technician will indicate same on the Asphalt Roadway Technician's Daily Report (M & T Form 605). Should there be any concern about the quality of material, samples should be taken in approved containers and submitted to the M&T Unit for testing.

9.3.2 Application Rates and Temperatures

In July 2012, a special provision updated the Standard Specifications for tack coat application rates and temperatures. A different target rate of application for different existing surfaces has been established as shown in Table 605-1.

TABLE 605-1
APPLICATION RATES FOR TACK COAT

Existing Surface	Target Rate (gal/sy)
	Emulsified Asphalt
New Asphalt	**0.04** (+/- 0.01)
Oxidized Asphalt or Milled	**0.06** (+/- 0.01)
Concrete	**0.08** (+/- 0.01)

NOTE: The plus or minus 0.01 in the rate is to account for any equipment variability only.

Uniformity of application and proper application rate are the keys to success of the tack coat performance. Between new layers of asphalt, a uniform target rate of 0.04 gal/sy is required. On all resurfacing projects, use a minimum of 0.06 gal/sy to account for an oxidized asphalt surface. Milled asphalt surfaces need to be properly cleaned and prepared prior to placing tack coat at a uniform target rate of 0.06 gal/sy.

Emulsion and asphalt binder tack is considered equivalent from a service viewpoint when applied at the proper rates. The primary advantage of emulsion is that it can be applied at a significantly lower temperature than asphalt binder tack and can normally be applied more uniformly. This lower temperature makes it easier to store and handle and also is much safer to use. However, regardless of the rate grade used, the tack coat material should be heated to the proper temperature so that it is fluid enough to be sprayed from the nozzles instead of coming out in strings. The temperature of the tack coat material at the time of application should be within the ranges in Table 605-2.

Table 605-2
APPLICATION TEMPERATURES FOR TACK COAT

Asphalt Material	Temperature Range (English)	Temperature Range (Metric)
Asphalt Binder, Grade PG 64-22	350 - 400°F	177 - 2 04°C
Asphalt Emulsion, Grade RS-1H	130 - 160°F	54 - 71° C
Asphalt Emulsion, Grade CRS-1	130 - 160°F	54 - 71° C
Asphalt Emulsion, Grade CRS-1H	130 - 160°F	54 - 71 °C
Asphalt Emulsion, Grade HFMS-1	130 - 160°F	54 - 71 °C
Asphalt Emulsion, Grade CRS-2	130 - 160°F	54 - 71° C

Table 9-1

The proper amount of tack coat for any surface is a matter of judgment, and this judgment must be made with the knowledge that too much asphalt could flush into the mix and cause loss of stability or could sometimes cause it to slip, and that too little tack will not properly bond the surfaces. Regardless of the rate selected, if the tack is not applied uniformly over the surface, the tack will not perform satisfactorily.

9.3.3 Application Of Tack Coat

The contractor shall provide a distributor for heating and applying the tack coat in accordance with Article 600-5 of the Standard Specifications and Section 9.1.1 of this manual. No more tack coat material may be applied than can be covered with base, intermediate, or surface course material during the next day's operation, except where public traffic is being maintained. Where public traffic is being maintained, no more tack coat may be applied than can be covered during the same day's operation. However, the Resident Engineer may limit the application of tack coat in advance of any paving operation depending on traffic conditions, project location, proximity to business or residential areas, or other reasons. In the event that tack coat material is not covered in the same day's operation, the
Resident Engineer may require the application of suitable granular material or other means to provide a safe traffic condition at no additional cost to the Department.

Tack coat must be applied only in the presence of and as directed by the Engineer. No base, intermediate, or surface mixture may be placed until the tack coat has been placed and sufficiently cured. **Tack coat shall be uniformly applied with the spray bar** on a pressure distributor in the presence of, and as directed by, the Resident Engineer or his Technician. In places where the distributor bars cannot reach, it will be necessary to apply the tack coat with a hand spray attached to the distributor by a hose. When hand spray methods are used, care should be taken to give the surface a adequate and uniform application of tack coat. All pavement contact surfaces of headers, curbs, gutters, manholes, core sample holes, vertical faces of old pavement and all exposed transverse and longitudinal edges of each course must be painted or sprayed with tack before any mixture is placed adjacent to such surfaces.

After the tack coat has been applied, it shall be protected from all traffic until it has cured sufficiently. It can be considered sufficiently cured when it is tacky to the touch. If emulsified asphalt is used, adequate time should be allowed for the water to evaporate leaving only the asphalt binder residue. Normally emulsified asphalt is brownish in color when first sprayed but will be black and tacky once the water has evaporated out of it. If a PG 64-22 binder is used for tack, plant mix can normally be placed on it almost immediately. After the tack has cured, it should still be protected as much as possible from all traffic. In the event that a rain or shower falls on the freshly placed tack coat, the Contractor shall at the direction of the Resident Engineer or his Technician place whatever signs, lights, and pilot cars that are

necessary to protect the traveling public from the slippery tack coat and shall maintain this protection as long as the hazardous condition prevails.

NOTE: Each layer of asphalt is required to be tacked. The Engineer is no longer allowed to waive the tack coat between two layers placed on the same day. This is to prevent pavement layer slippage.

9.3.4 Determination Of Tack Coat Rate

In July 2012, a new NCDOT special provision for "Application Rates and Temperatures" specifies the rates for different surfaces as shown in Table 605-1. DOT Technicians should check tack coat placement and insure the surface is clean, verify uniform coverage across the mat, and inform the Contractor that the tack must be allowed to "break" prior to placing trucks on tack or beginning the paving operation. The DOT Technician should also periodically check that the distributor truck equipment is in proper working order such as spray nozzles and nozzle angle settings, spray bar height, computerized application rate gauge in the truck, flow meter gauge to measure gallons, etc. Also, check the temperature gauge on outside of truck for proper application temperature of the tack coat.

The tack coat rate must be regularly checked by the DOT Technician to determine that the specified amount is being placed. The rate of application may be obtained at intervals by using the total gallons (liters) applied divided by the square yards (square meters) upon which the tack coat was placed. At the end of each operation, a Technician must compute the actual rate of tack coat applied and record this on his daily report (M&T 605 form). The rate of application should be calculated separately for each individual application or "shot". An example of a tack coat rate calculation is shown on the following page.

EXAMPLE CALCULATION OF TACK COAT RATE

275 gallons (1040 liters) of CRS-1 was applied 12 feet (3.6 meters) wide from Sta. 12+00 to 45+00 (3+66 to 13+72) at a directed rate of 0.06 gals / yd^2 (0.30 L / m^2). What is the actual tack coat rate of application in gals. per square yard (liters per square meter)?

English Units

$$\text{Rate of Application} = \frac{\text{No. Gals. Used}}{\text{No Sq. Yds. Tacked}} = \frac{\text{Gals.}}{\text{Sq. Yd.}}$$

For Rectangular Area:

Length = Ending Sta. - Beginning Sta. = 45+00 - 12+00 = 3300 L.F.

$$\text{Rate of Application} = \left(\frac{\dfrac{\text{No. Gals. Applied}}{\text{Length (ft.) x Width (ft.)}}}{\text{9 sq. ft. / sq. yd.}} \right) = \left(\frac{\dfrac{275}{\text{3,300 (ft.) x 12 (ft.)}}}{\text{9 sq. ft. / sq. yd.}} \right) = 0.063 \text{ gals / sq. yd.}$$

Say 0.06 gals/ sq. yd.

Metric Units

$$\text{Rate of Application} = \frac{\text{No. Liters Used}}{\text{No Sq. Meters Tacked}} = \frac{\text{Liters}}{\text{Sq. Meters}}$$

For Rectangular Area:

Length = Ending Sta. - Beginning Sta. = 13+72 - 3+66 = 1006 meters

$$\text{Rate of Application} = \frac{\text{No. Liters Applied}}{\text{Length (meters) x Width (meters)}} = \frac{1040}{\text{1006 m x 3.6 m}} = 0.287 \text{ liters / sq. meter}$$

Say 0.29 liters/sq. meter

NOTE: Significant Decimal for Tack Coat is 0.01

9.4 HOT MIX PLACING AND COMPACTION OPERATIONS - GENERAL

9.4.1 Introduction

Placing and compacting the asphalt mixture is the operation to which all the other processes are directed. Aggregates have been selected and combined; the mix designed; the plant and its auxiliary equipment set up, calibrated and inspected; and the materials mixed together and delivered to the paver.

Asphalt mix is delivered to the paving site in trucks and may be deposited directly into the paver, or in windrows in front of the paver, or transferred to the paver by specially designed materials transfer equipment. The paver then spreads the mix to the required grades, cross-section thickness, and widths shown on the plans and typical sections as it moves forward. In doing so, the paver partially compacts the material and provides a smooth, uniform texture. Immediately thereafter and while the mix is still hot, steel-wheeled, vibratory or rubber-tired rollers or some combination of these are driven over the freshly paved mat, further compacting the mix to the required density and texture. Rolling is usually continued until the pavement is compacted to the required density, or the temperature has dropped to a point where further compaction may produce detrimental results.

After the pavement course has been compacted and allowed to cool, it is ready for additional paving courses or ready to support traffic loads.

9.4.2 Planning Paving Operations

Paving operations require careful planning, preparation, co-ordination, and communication between all parties. The surface to be paved must be properly prepared. Enough vehicles and equipment must be available and in good operation to provide a steady flow of materials and progress without delays. Plant production must be closely coordinated with the paving operation, and the compaction of freshly placed mixture must be prompt and adequate.

Nowhere in the construction of hot-mix asphalt pavements are the efforts and skills of workers, operators, and technicians more apparent than in the placing and compacting of the hot-mix in the roadway. Having the necessary knowledge and skills of the paving operation and having pride in the final product can mean the difference between a durable, smooth-riding pavement and a rough, unsound, unsightly pavement that will not perform as was intended, but also, is a nuisance to drive on.

Recent national surveys of the traveling public (taxpayers) indicate that their perceptions of high quality pavements are those which are smooth and last for a long time. While the public is usually neither aware nor concerned about other properties such as gradation, binder content, voids properties, density, etc., we as Engineers and Contractors know that mix quality, smoothness, and density are significantly related. Smoothness is an indicator of a pavement that has uniform and consistent mix properties without segregation during placement. Achieving uniform density at the proper level during placement and compaction results in a pavement which will have more rut resistance, less permeability, less oxidation, less fatigue cracking, be more durable, require less maintenance and therefore, last longer. The key is communication and consistency. To meet these objectives requires substantial planning on the part of all parties involved.

Because planning and communication are so essential for successful paving operations, a pre-paving construction conference should be held before work begins. Such a conference allows the Department's Project Engineer, the Contractor's Paving Superintendent, Traffic Control personnel, Trucking personnel, Roadway and Density Technicians, and others directly involved with the operation the opportunity to discuss topics such as the following and to plan the paving operation accordingly:

1. **SAFETY**
2. Continuity and sequence of operations
3. Number of pavers to be used on the project
4. Number and types of rollers needed
5. Number of trucks required
6. The chain of command for communication
7. Traffic Control
8. Weather and temperature req's, restrictions
9. Intermingling of mixes from different sources
10. Use of automatic screed controls (Profile & Slope)
11. Method of density control, smoothness control, etc.
12. Construction of control strips
13. Drainage and Utility Adjustments
14. Overruns/underruns
15. QC/QA Checklist
16. MTV Required

The <u>pre-paving construction conference is the time for questions to be answered, problems to be solved in advance of construction, and channels of communication and command to be established</u>. It is a time to establish relationships with everyone involved in the project so that confusion and friction can be avoided once paving operations begin. As many questions and issues as possible should be resolved prior to beginning paving operations. In most circumstances, this will be reflected in a higher quality finished product.

9.4.3 <u>Weather, Temperature and Seasonal Limitations</u>

Article 610-4 of the Standard Specifications addresses air temperatures, road surface temperatures, seasonal limitations, weather requirements, the layer being placed, and layer thickness that apply when producing and/or placing the various mixture types.

Asphalt mixtures shall not be produced or placed during rainy weather, when the subgrade or base course is frozen, nor when the moisture on the surface to be paved would prevent proper bond. Asphalt material must not be placed when the air temperature measured in the shade away from artificial heat at the location of the paving operation and the road surface temperature in the shade at the paving site is less than the following temperatures.

Asphalt Mix Type	Min. Air Temperature	Min. Surface Temperature
B25.0B, C, PADC	35°F (2°C)	35°F (2°C)
I19.0B, C, D	35°F (2°C)	35°F (2°C)
S4.75A, SF9.5A, S9.5B	40°F (5°C)	50°F (10°C)[A]
S9.5C, S12.5C	45°F (7.6°C)	50°F (10°C)
S9.5D, S12.5D	50°F (10°C)	50°F (10°C)
*OGAFC, FC 1	50°F (10°C)	50°F (10°C)
*OGAFC, FC 1 Mod & FC 2 Mod	60°F (15.6°C)	50°F (10°C)

A. 35°F if surface is soil or aggregate base on secondary road construction.
*Article 650-5 Standard Specification

In addition, surface course material which is to be the final layer of pavement shall not be placed between December 15 and March 16, except that OGAFC will not be placed between October 31 and April 1 of the next year, unless otherwise approved by the Engineer.

As an exception to the above, when in any day's operations, the placement of a layer of asphalt base course material or intermediate course material 2" or greater in thickness has started, it may continue until the temperature drops to 32°F (0°C).

No plant mix base course or intermediate course shall be placed that will not be covered with surface course during the same calendar year or within 15 days of placement if the plant mix is placed in January or February. Failure of the Contractor to cover the plant mix as required above will result in the Engineer notifying the Contractor in writing to cover the plant mix with a sand seal. The sand seal shall be applied in accordance with the requirements of Section 660 of the Standard Specifications, except that Articles 660-3 and 660-11 will not apply. This work shall be performed by the Contractor at no cost to the Department. In the event the Contractor fails to apply the sand seal within 72 hours of receipt of such notice, the Engineer may proceed to have such work performed with Department forces and equipment. The cost of such work performed by Department forces will be deducted from payments due or to become due to the Contractor.

Meeting the requirements of the weather and temperature limitations does not preclude the enforcement of compaction and surface requirements of the Specifications. If the required density, surface tolerances and/or an acceptable surface finish cannot be achieved, the Contractor must be so advised and paving operations should cease until these requirements can be met. See Section 10 of this Manual for limited production procedures for these problems.

Asphalt mixtures shall not be produced or placed during rainy weather. In no event should mixture be placed in standing water or when the moisture on the surface to be paved would prevent proper bond. In the event unpredictable rain begins after paving operations have started, the plant production should immediately cease. If the Contractor requests and the Engineer grants approval, he may be allowed to place any mixture which is in transit at his own risk. This material will be subject to removal if problems are encountered, including but not limited to poor bond, low density or unsatisfactory laydown.

9.5 SPREADING AND FINISHING OF ASPHALT PAVEMENTS

9.5.1 Spreading and Finishing Equipment

Most asphalt plant mixtures are placed by asphalt pavers and compacted by either steel-wheeled static or vibratory rollers, pneumatic-tired rollers, or some combination of these. This is the basic paving equipment. Other equipment used in connection with the paving operation may include: milling equipment, the asphalt distributor, haul trucks, materials transfer devices, motor grader, wind-rowing equipment, hand tools, and other machinery and implements. Specification requirements for hauling, placing, and compaction equipment are included in Division 6 of the 2006 Standard Specifications and in Sections 8 and 9 of this Manual.

The Contractor must furnish and utilize equipment, which meets the requirements of the Specifications, unless otherwise approved by the Engineer. Prior to beginning paving operations, the Resident Engineer or the Roadway Technician must inspect the Contractor's spreading and finishing equipment to see that it meets all requirements of the Specifications and is in good working order. If the equipment meets Specifications and is in satisfactory operating condition a statement shall be entered in the Technician's Daily Diary. If not, the Contractor should be advised accordingly and corrective actions taken before paving begins. See the Technicians Checklist for QC/QA Roadway Operations in Section 10.1 and the following information.

(A) Incidental Tools

Adequate hand tools and proper equipment for cleaning and heating them should be available for the paving operation. Incidental tools to be furnished by the Contractor include:

1. Rakes
2. Shovels
3. Lutes;
4. Tool heating torch;
5. Cleaning equipment;
6. Hand tampers;
7. Small mechanical vibrating compactors;
8. Blocks and shims for supporting the screed of the paver when beginning operations;
9. Heavy paper, or timbers for construction of joints at ends of runs;
10. Joint cutting and tacking tools
11. 10 foot (3 meter) straightedge (See Section 610-12 of Standard Specifications)
12. 6" (150mm) Core Drill
13. 4 Foot (1.2 meter) Level
14. Depth Checking Device
15. Infrared Thermometer
16. Stringline for paver alignment
17. North Carolina Hearne Straightedge (when required by contract)

(B) Asphalt Distributor

An asphalt distributor is required to apply tack coat material before paving operations begin. Details on requirements and use of the asphalt distributor are covered in Article 600-5 of the Standard Specifications and Section 9.1.1 of this Manual.

(C) Haul Trucks

Hot-mix is delivered to the jobsite by trucks. Article 610-7 of the specifications state the requirements for hauling vehicles. The technician must be certain that the mixture being delivered is within specifications and that it is being delivered in a manner that is safe.

Article 610-7 requires trucks to have tight, clean, smooth beds and free of holes. All trucks must meet minimum safety criteria. Each truck must be clearly numbered for easy identification and must be equipped with a tarp. Tarps shall be of a solid waterproof construction such as canvas, vinyl or other suitable material. A 3/8 – 5/8 inch diameter hole must be located on each side for the purpose of inserting a thermometer to check the mix temperature.

Before being loaded, the truck bed must be cleaned of foreign material and hardened asphalt and then lightly coated with an approved truck release agent that aids in preventing fresh hot-mix asphalt from sticking to the surfaces of the bed. (For a current list of approved release agents, contact the Materials and Tests Unit at phone number (919) 329-4060 or visit their approved products web site located at https://apps.dot.state.nc.us/vendor/approvedproducts/). **Fuel Oil and Kerosene are not allowed for this purpose**. After the bed is coated, any excess release agent must be drained from the bed.

Before loading, the truck must also be weighed to establish a tare weight (unloaded weight). The tare weight is later subtracted from the loaded weight of the truck to determine the weight of hot-mix the truck is hauling. (See weigh ticket requirements in Section 6.8.1)

The number of trucks required on the project is determined by many factors: the mix production rate at the plant, the length of the haul, the type of traffic encountered, and the expected time needed for unloading.

The truck must be inspected to be certain the rear of the bed overhangs the rear wheels enough to discharge mix into the paver hopper. If it does not, an apron with side plates must be added to the truck body to increase the overhang and prevent spillage of mix in front of the paver.

The bed must also be of a size that will fit into the hopper without pressing down on the paver. The hydraulic system for the truck bed hoist should be frequently inspected to guard against hydraulic fluid leakage. Such leakage on the roadway surface will prevent good bonding between the roadway and the new mat. If enough oil or fuel is spilled that the mix can absorb it, the mix can become unstable at the spot. As a result, leaking trucks must not be used.

Tarps are pulled over the mixture during hauling to protect the mixture from excessive cooling and/or the intrusion of water. Care must be taken to be sure it is securely fastened to the top of the truck bed so that cold air cannot funnel under it and that moisture cannot enter the mix. A cool mix forms lumps and a crust over its surface. A mix with excessive moisture in it will probably blister and not lay smoothly, as it will pull and tear.

During the haul operation, the Contractor should take necessary precautions to limit the tracking and/or accumulation of tack coat material on either existing or newly constructed pavements. Trucks should minimize their distance traveled over freshly tacked pavement and avoid tack that has not broken.

During delivery, the driver must direct the truck squarely against the paver, and should stop the truck a few inches from the paver, before the truck tires make contact with the paver push roller bar. Backing the truck against the paver can force the screed back into the mat leaving a bump in the pavement even after the mat is rolled.

The truck bed should be partially raised and the load allowed to “break” before the tailgate is opened to prevent the mix from dribbling from the load into the paver hopper. This technique will help to minimize segregation that occurs between loads.

(D) <u>The Asphalt Paver</u>

Use a self-contained, power propelled paver capable of spreading and finishing the asphalt mixture to the required grades, cross sections, thickness, and widths shown on the plans and typical sections and to uniform density and texture. The asphalt paver spreads the mixture in a uniform layer of desired thickness, shape, elevation and cross section, ready for compaction. Modern pavers are supported on crawler tracks or wheels. These machines can place a layer of less than 1 in. (25 mm) to around 8 in. (200 mm) in thickness over a width of 6 to 32 ft. (2 to 10 meters). Working speeds generally range from 10 to 70 ft. (3 to 21 meters) per minute. The basic asphalt paver consists essentially of a tractor unit and a screed unit. The paver used in highway construction is a relatively large machine with many intricate parts and adjustments. Most pavers in use today may differ in detail, but they are all similar in principle and operate based on the principle of the self-leveling, floating screed.

The plan and side views shown in Fig. 9-3 trace the flow of asphalt mix from the receiving hopper at the front of the paver to the finished pavement behind the screed unit at the rear of the machine. The mix is dumped into the receiving hopper at the front of the machine from a truck that is pushed ahead by the paver. Rollers mounted on the front of the paver contact the rear tires of the truck and allow the paver to push the truck while it is dumping into the hopper.

After receiving the material in the hopper, two independently controlled slat conveyors, sometimes called flights, carry the mix back through the control gates to the spreading screws (augers). Each auger

and its respective conveyor are automatically controlled to allow the mix to be uniformly distributed and maintained in front of the screed unit.

The screed unit is attached to the tractor unit by two long pull arms that pivot well forward on the paver. The arms provide no vertical support for the screed when it is in operating position. As the tractor pulls the screed into the material, the screed will seek the level where the path of its bottom surface is parallel to the direction of pull of the tow point.

An often overlooked but important item is the proper cleanup of the paving machine at the end of the working day. While the machine is still warm, the hopper, feeders, spreading screws, tamper bars, and screed plates should be given a light spray of release agent to ensure a smooth start the next day.

1. **<u>The Tractor Unit</u>**

The tractor unit provides the motive power through crawlers or pneumatic tires traveling on the road base. It includes the propulsion system, push rollers, paver hopper, slat conveyors, flow gates, spreading screws (augers), materials feed systems, and controls. Most pavers are equipped with dual controls so that the operator can sit on either side while he operates the paver.

It is impractical to describe in detail all tractor units in current use. There are several features, however, which are generally common to all and should be checked at the beginning of the paving operation and examined periodically thereafter. Most points that should be checked involve moving or working parts. For more detailed information, service manuals provided by the manufacturer should be carefully studied.

The governor on the engine should be checked for proper operation. It is important that the tractor unit provide a smooth steady pull on the screed arms. If the paver is equipped with pneumatic tires, air pressure should be as recommended. On crawler machines, crawlers should be snug but not tight. Any unnecessary movement caused by low tire pressure or loose crawlers when the machine starts or stops will be reflected in the surface of the mat as the screed is pulled forward.

The specifications require that the paver be equipped with a receiving hopper and an automatically controlled distribution system capable of uniformly maintaining a proper head of material in front of the full length of the screed, including screed extensions, be utilized. In the bottom of the paver hopper are two slat conveyers. These conveyors are used to carry the asphalt mix from the hopper through the tunnel on the paver and back to the augers. The slat conveyor and auger on one side of the paver operates independently from the movement of the slat conveyor and auger on the other side of the machine. However, the auger and slat conveyor on each side of the paver are interlocked such that they operate simultaneously. Thus, the amount of mix that can be carried back through the paver on one side can be varied from the amount of material that is being delivered on the other side. This capability allows the automatic controls or the paver operator to manually feed more or less material to one side of the paver or the other for various reasons, including paving ramps, mail box turnouts, tapers, variable widths, and variable depth areas.

Flow control gates at the back end of the hopper over each of the slat conveyors can be individually adjusted to control the material flow rate to the augers. These gates regulate the amount of material that can be delivered by the conveyors to the augers.

Sensors mounted on the paver near the outer end of the augers detect the amount of material being carried in front of the screed and activate the automatic controls when material is needed. The automatic controls actuate the augers and the slat conveyors to keep a constant depth of material in front of the screed, including screed extensions. The feed system should be

adjusted so as to cause the conveyors and augers to operate as close to 100% of the time as possible (**at least 85% of the time**) with a **uniform** head of material at a level at or just above the center of the auger shaft in front of the screed at all times. Some newer pavers are equipped with systems which allow the augers to run 100 percent of the time.

On some newer pavers, the slat conveyor system has been replaced by a screw conveyor system. The purpose of this new system is to provide remixing of the mixture in the paver hopper to reduce both temperature and aggregate segregation in the mat behind the screed.

The mix deposited in the auger chamber from the slat conveyors is distributed across the width of the paver screed by the movement of the augers. At the junction of the two augers in the center of the paver, adjacent to the auger gear box, there typically is a different shaped auger (reverse auger or paddle) to tuck mix under the gear box and assure that mix placement at this location is the same as that across the rest of the width of the mat being laid. If the reverse auger paddles are not operating properly or are in poor condition, a coarse segregated streak of material will most likely show up in the middle of the mat. It is important that the augers carry a consistent amount of mix across the front of the screed so that the pressure (head of material) on the screed is kept as constant as possible. Auger extensions shall be used to provide a proper head of mix in front of the full screed length. When the screed is extended by more than one foot, the auger on that side of the paver shall be extended by an equivalent amount.

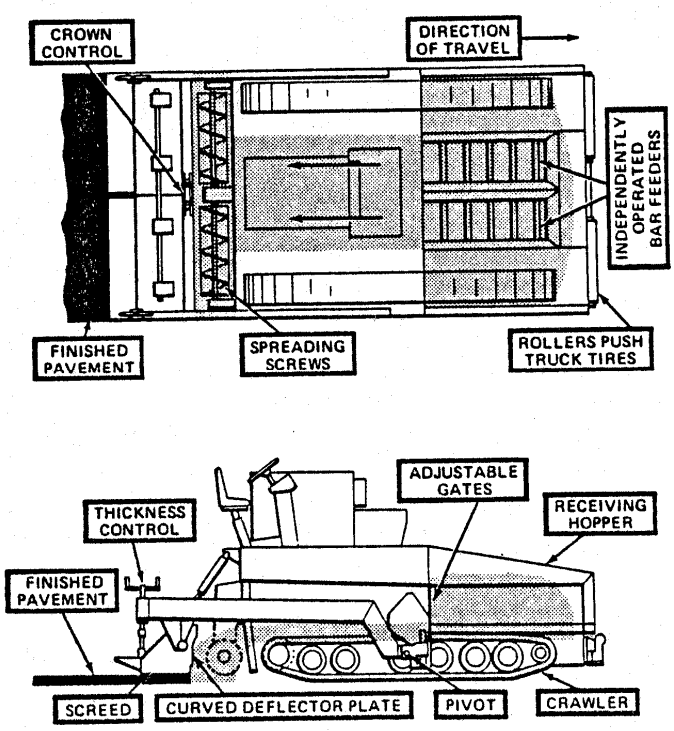

Figure 9-3
The Tractor Unit

2. The Screed Unit

The paver screed is a free floating unit that strikes off, partially compacts, and irons the surface of the mat as it is pulled forward by the tractor unit. The screed is attached to the tractor unit at only one point on each side of the paver called the pull point or tow point. This allows the screed to "float", dependent upon the forces acting on the screed as it is being pulled forward into the mix by the tractor unit. The basic principle of the free floating screed is employed on all modern

asphalt pavers in use today. For specific details on a particular brand or model paver, service manuals and literature by the manufacturer should be studied in detail. (See Fig. 9-4 for illustration of various screed components of the screed unit)

Equip and operate the paver with a fully activated screed plate that is designed to be preheated for the full width whenever necessary. The fully activated screed must have operational vibrators and heat source. The vibrators cause the mixture to feed more uniformly under the screed and also impart some initial compaction to the mat. This results in a more uniform mat thickness, increased density, improved smoothness and better surface texture. This initial compaction also helps to minimize the amount the screed settles when the paver is stopped for various reasons. Vibration may be accomplished with electrically operated mechanical vibrators or eccentrically loaded turning shafts which produce vibration. The frequency of vibration may be controlled, thus helping to obtain a maximum compacting and smoothing effect. The optimum frequency and amplitude for best results in surface texture, smoothness and density is a trial and error process; however, vibrators must be used at all times on all layers of mixture.

Both the leading and trailing edges of the screed have a crown adjustment. The leading edge (front) should always have slightly more crown (normally about 1/8 inch or 3 mm) than the trailing edge (rear) to provide a smooth flow of material under the screed. Too much lead crown, however, creates an open texture along the edges of the mat while too little lead crown may create an open texture along the center of the mat. Optimum crown adjustment also is a matter of trial and error. Crown adjustments to the leading edge or trailing edge of the screed may be made independently or simultaneously during the paving operation. The objective is to achieve a smooth, uniform texture across the entire width of the mat.

The screed must be equipped with heaters to prevent the mix from sticking to the screed plate. They must always be used to pre-heat the screed to nearly the same temperature as the asphalt material passing under it at the start of paving operations. Sometimes they are needed when paving during cool, windy days. However, they should never be used to attempt to heat cool mixture being delivered to the paver. Pre-heating helps to minimize the pulling and tearing that usually occurs on start-up.

Before paving begins, the screed should be raised and the bottom surface carefully checked for smoothness, holes, and/or excessive wear. Screed plates first wear out about 4 to 6 inches in (100 to 150 mm) from the trailing edge. Extensions should be flush with and in the same true plane as the bottom surface. Tampers should be checked for excessive wear, adjustment, and proper operation. Excessive wear causes a pitted surface in the mat, and improper adjustment gives the mat a scuffed appearance. The limit of the bottom stroke of the tamper bar should extend 1/64 in (0.4 mm) below the bottom of the screed plate (the thickness of a fingernail). If the screed is of the vibrating type, the vibrators should be started with the screed in a raised position to see that adequate vibration is being achieved. Their performance must also be checked during the paving operation. **Either the tamper bars or the vibrators, depending on the screed type, must be utilized at all times on all courses during the laydown operation**.

While the screed is raised, the strike-off device in front of the screed should be checked for condition and adjustment in accordance with manufacturer's recommendations. An uneven, damaged, worn or improperly adjusted strike-off can greatly affect the smoothness, texture and uniformity of the mat.

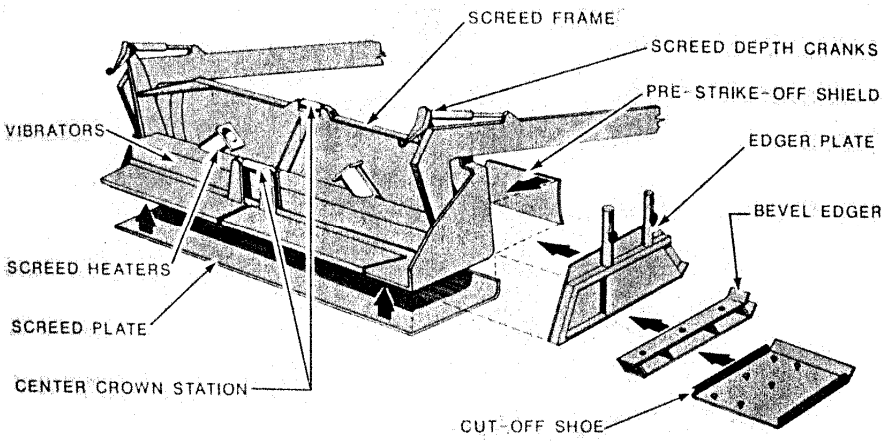

Figure 9-4
The Screed Unit

Pavers must be equipped with a screed control system which will automatically control the longitudinal profile and cross slope of the pavement through the use of either a mobile grade reference(s), including mechanical, sonic and laser grade sensing and averaging devices, an erected string line(s) when specified, joint matching shoe(s), slope control devices or other methods or combination of methods approved by the Engineer. An erected fixed stringline must be used when required by the contract; otherwise, a mobile grade reference system capable of averaging the existing grade or pavement profile over a minimum 30 foot (9 meter) distance or by a non-contacting laser or sonar type ski with at least four referencing stations mounted on the paver at a minimum length of 24 feet shall be used. Position the system such that the grade sensor is at the approximate midpoint of the grade reference system. The transverse cross-slope shall be controlled as directed by the Engineer.

A spirit level mounted on the screed or on a wedge board should be available so that a check on the roadway crown can be made at any time. The heating unit should also be checked for proper operation by lighting the burner and allowing it to burn a few minutes prior to beginning paving operations.

(E) Material Transfer Vehicle

A Material Transfer Vehicle (MTV) is basically a surge bin on wheels which transfers the mixture from the haul vehicle to the paver hopper at a uniform and continuous rate so as to allow continuous movement of the paver between truck exchanges, provided a continuous supply of material is received from the plant. This allows the paver to operate almost continuously, without stopping between truck exchanges. In addition, the MTV also remixes the mixture prior to discharge into the paver conveyor system to minimize aggregate segregation and temperature variation that may have occurred during mix production, loading from silos, and cooling during hauling.

The proper use of an MTV significantly improves the uniformity and ride quality of any pavement and is highly encouraged by the Department. Article 610-8 specifically requires the use of a Material Transfer Vehicle (MTV) when placing all asphalt concrete plant mix pavements which require the use of asphalt binder grade PG 76-22 and for all types of OGAFC, unless otherwise approved. Use an MTV for all surface mix regardless of binder grade placed on Interstate and US Routes that have 4 or more lanes and are median divided. Where required above, utilize the MTV when placing all full width travel lanes and

collector lanes. Use MTV for all ramps, loops, -Y- line travel lanes, full width acceleration and deceleration lanes, and full width turn lanes that are greater than 1,000 ft. in length.

One of the key factors in achieving smooth pavements is to maintain a uniform head of material in front of the screed without stopping the paver. Keeping a constant stream of trucks supplying mix to the MTV is necessary if a continuous paving operation is to be achieved. However, if a gap does occur, the MTV should be stopped with out being completely emptied when waiting fir trucks, so that a consistent minimum amount of mix is retained on the augers to mix with the new, possibly segregated, material delivered from the next haul truck. In addition, the paver should be stopped with the hopper half full so that the amount of mix in front of the paver screed remains constant and the proper smoothness of the mat can be achieved.

The specifications require that an MTV that provides to the paver a uniform, non-segregated mixture that is of uniform temperature be used such that there is no more than 20°F difference between the highest and lowest temperatures when measured transversely across the width of the mat in a straight line at a distance of one foot to three feet from the screed while the paver is operating. The temperature measurements are taken approximately one foot from each edge and at least once in the middle of the mat.

Some MTVs are very heavy. Empty the MTV when crossing a bridge and move across without any other Contractor vehicles or equipment being on the bridge. Move the MTV across a bridge in a travel lane and not on the shoulder. While crossing a bridge move the MTV at a speed no greater than five miles per hour without any abrupt acceleration or deceleration.

In the event the MTV malfunctions during paving operations, immediately discontinue plant operations and do not resume operations until the MTV malfunctions have been remedied, unless otherwise directed by the Engineer due to safety concerns. The Contractor may continue placement of the mix until any additional mix in transit has been placed, provided satisfactory results are achieved. This procedure in no way alleviates the Contractor from meeting contract requirements.

9.5.2 Coordinating Plant Production And Paver Speed

Operate pavers at a forward speed consistent with plant production, material delivery, and satisfactory laying of the mixture so as to ensure a uniform and continuous laydown operation. Coordinate and adjust the paving operation and loading operation so as to maintain an adequate amount of asphalt mixture in the paver hopper between truck exchanges. Do not allow the paver hopper to become empty between loads. Should unevenness of texture, tearing, segregation, or shoving occur during the paving operation due to unsatisfactory methods or equipment, immediately take such action as may be necessary to correct such unsatisfactory work. Excessively throwing back material will not be permitted.

Uniformity of operations is essential in asphalt hot-mix paving. Uniform, continuous operation and forward speed of the paver produces the highest quality pavement. A smooth pavement with uniform density and surface texture is the ultimate goal.

There is no advantage in the paver traveling at a speed that allows the mix to be placed faster than the plant can produce mix and/or the mix can be delivered to the roadway. Paving too fast can result in the paver having to stop frequently to wait for trucks to bring more mix. If the wait is too long (more than a few minutes on a cool day) the smoothness and surface texture of the pavement will suffer. In manual operation, when the paver starts up again, the mix in the paver that has cooled causes the screed to rise and then fall as warmer mix feeds through the paver and the screed seeks the equilibrium level. If automatic screed controls are being used, the automatic system overcorrects the screed, causing it to dip before finally leveling off, and thereby causing a rough riding surface in the pavement. In addition, these areas are usually different in surface texture (open), many times the mix is segregated, and density is

almost always lower, if not failing. A POTHOLE WAITING TO HAPPEN. Obviously, then, it is essential that plant production and paving operations be coordinated. The paver must be continuously supplied with enough mix, and at the same time, the trucks should not have to wait a long time to discharge their loads into the paver hopper.

The paving machine should never be operated at a speed in excess of that which will result in a properly placed mixture. If the paver cannot properly place the mixture at a rate equal to plant capacity, the plant production rate will need to be slowed, or other corrective measures taken. A chart similar to the one shown in Figure 9-5 may be helpful in balancing paving machine speeds with plant production. However, it doesn't take a rocket scientist to realize that if the paver is waiting for extended periods between every load, then the paver needs to be slowed down.

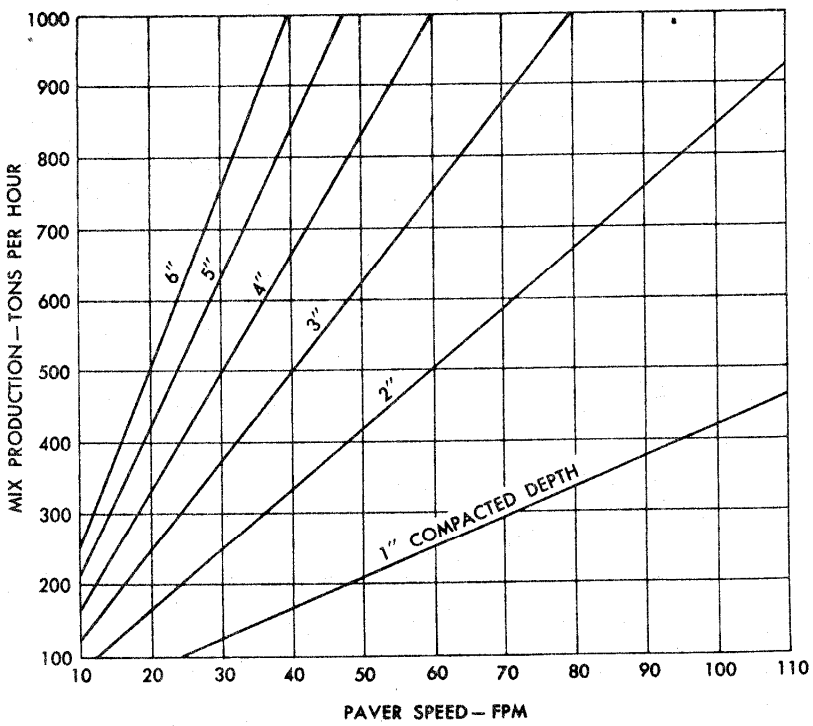

NOTE: Paver speed based on spread 12-ft. wide and a compacted density of 140 lb. per cu. ft.

Figure 9-5
Paving Machine Speeds Required to Handle Plant Production

9.6 THE PLACING OPERATION

Construct pavements using quality paving practices as detailed herein. Construct the pavement surface smooth and true to the plan grade and cross slope. Immediately correct any defective areas with satisfactory material compacted to conform with the surrounding area. Pavement imperfections resulting from unsatisfactory workmanship such as segregation, improper longitudinal joint placement or alignment, non-uniform edge alignment and excessive pavement repairs will be considered unsatisfactory and if allowed to remain in place will be accepted in accordance with Article 105-3. When directed due to unsatisfactory laydown or workmanship, operate under the limited production procedures. (See Section 10.2.4)

Prior to beginning operations a string line must be placed by the Contractor along the edge of the proposed pavement to provide horizontal alignment control for the paver operator. The objective is to

ensure a true and uniform line for the pavement edge(s). A string line will not be required when the first course is placed adjacent to a curb section. The Contractor and the Technician must frequently check the stringline to assure that it is correctly located and of uniform alignment and is being followed.

Apply tack coat in accordance with the provisions of Section 605 of the Specifications and Section 9.3 of this Manual.

The Specifications state that mixtures produced simultaneously from different plant sources can not be intermingled by hauling to the same paver on the roadway unless the mixtures are being produced from the same material sources and same mix design.

The Specifications require that the paver be operated as continuously as possible. Pave intersections, auxiliary lanes, and other irregular areas after the main line roadway has been paved, unless otherwise approved.

Some contracts require the use of an erected fixed stringline for both and longitudinal profile and cross slope control. When an erected fixed string line is required, the Contractor must furnish and erect the necessary guide line for the equipment. Support the stringline with grade stakes placed at maximum intervals of 25 feet (7.6 meter) for the finished pavement grade.

9.6.1 The Spreading Operation

After the paver has been checked and has been positioned on the road, the screed should be lowered onto "**starting blocks**" (shims) of the same thickness as the loose mat to be laid and the thickness control screws adjusted for this depth. Or, if starting from a previously laid mat, "starting blocks" of the same thickness as the difference between the loose and compacted mats should be used. A general rule of thumb is to increase the loose thickness by 1/4 inch per inch of compacted thickness. The thickness control screws on the screed are then adjusted for this depth. When this is done, the paver will then begin spreading the loose material at a depth such that after compaction, the desired depth of mat will be achieved. It is desirable that the starting blocks (shims) be as long, or longer than the distance from the front edge to the rear edge of the screed plate. This gives the screed plate full bearing at each end on a surface, which is close to parallel with the grade, upon which the screed can be nulled out.

As soon as the first load of asphalt mix has been spread, the texture of the unrolled surface should be checked to determine its uniformity. Adjustment of the screed, tamping bars or vibrators, spreading screws, hopper feed, and other adjustment points should be checked frequently to assure uniform spreading of the mix to proper line and grade. A straightedge should be used to determine whether or not a smooth surface is being obtained.

When the truck is dumping its load into the hopper, the wheels should firmly contact the truck push rollers of the paver. This is done automatically on many pavers, with oscillating push rollers that permit some misalignment of the truck. When the truck is skewed, the oscillating push rollers automatically adapt to that condition and the truck load is concentrated at the center of the paver. If the paver is not equipped with oscillating push rollers and a truck is skewed so that the rollers are pushing against one set of dual wheels only, the spreader tends to skew also. In this case, continual correction is required by the operator, resulting in a ragged line with consequent irregular and poorly compacted joints. In addition, the rollers must be clean and free to rotate to allow smooth forward travel of the paver.

The sides, or wings, of the hopper are movable. Mix, if left to stand for a long period of time in the corners of the hopper, will cool and may appear as chunks of mix back of the screed when it passes through the paver. Thus, the mix is periodically moved from the sides of the hopper into the middle of the hopper by folding the wings (sides) and allowing the mix to be deposited into the area of the slat conveyors.

Many paver operators dump (fold) the wings of the paver after each truckload of mix has been emptied into the hopper. Further, to prevent spillage of the mix out the front of the hopper, the operator

often pulls the amount of mix left in the hopper down during discharge and after the truck has left the hopper by continuing to run the slat conveyors to feed mix back to the augers. This may result in the slat conveyor running completely empty. This practice can lead to increased mat problems if segregated mix is deposited on the conveyor slats, either from the paver wings or from the haul truck, and carried back to the augers and screed. It is not good practice to dump the paver wings after each truckload of mix has been delivered or to deposit the mix held in the wings into an empty paver hopper, because either procedure can cause segregation and decrease the quality of the finished mat.

Take necessary precautions during production, loading of trucks, transportation, truck exchanges with paver, folding of the paver hopper wings, and conveying material in front of the screed to prevent segregation of the asphalt mixtures.

To minimize segregation, the paver operator should fold the wings as seldom as possible. The frequency at which the wings are dumped depends on the rate of delivery of the mix to the paver, the temperature of the mix, and the environmental conditions. The wings should be emptied before the mix that collects in the corners of the hopper cools so much that chunks are formed that cannot be broken up as that mix moves through the paver to the augers and under the screed. On colder days, the hopper wings will need to be dumped more frequently than on warmer days. In some cases, it may be better to allow the mix to remain on the wings until the end of the day and then remove and discard the cool, hardened mix.

When the hopper wings are folded, the paver hopper should be at least partially full. The amount of mix in the hopper should be approximately at the level of the bottom of the flow gates at the back of the hopper. This will provide enough mix to heat the cooler material in the wings before it goes through the screed. The slat conveyors should not be visible at the time that the wings are raised. As discussed later, keeping the hopper relatively full between truckloads of mix keeps the head of asphalt mix in front of the paver screed constant and also reduces any segregation that might be present in the mix. In addition, the wings should not be “banged” repeatedly as they are emptied.

Segregation of the mix must not occur. **If segregation should occur, the spreading operation shall be stopped immediately and not resumed until the cause is determined and corrected**. See **“SEGREGATION OF MIXES ON THE ROADWAY”** later in Section 10 of this Manual.

The amount of material carried ahead of the screed should be kept uniform in height. Variation may result in surface roughness. If the mix pulls and tears under the screed, the condition should be investigated immediately. Common causes of pulling are moisture in the mix, too cold a mix and too high a percentage of screenings in the fine aggregate. For example, when the fine aggregate portion of the mix is composed of stone screenings and sand, an excessively high proportion of screenings may toughen the mix unduly. A tough mix is very desirable for stability but sometimes pulls badly. Even a slight change in the fine aggregate sometimes makes an appreciable difference in placing and rolling characteristics.

Some pavements may develop extreme crowns (either steep or flat) after many overlays have been placed. When not restricted by existing curbs, leveling wedges may be placed on both sides of the crown. The mix should contain small-size aggregates and be feathered near the center or edge of the existing crown.

Many paving operations consist of variable widths not common to multiples of the normal paver width. Cutoff shoes or screed extensions may be used to vary the paver width. In multiple lane paving, the cutoff shoe should always be opposite the joint matching side of the paver. The final lane should be at least the width of the paver. When adding extensions, it is important that they match the screed on the paver, i.e., tamping, vibrating, or oscillating.

Urban paving poses additional problems. Intersections require changes in the crown to facilitate rainfall runoff. This is achieved by reducing crown in the leading and trailing edges of the screed equally.

Manholes and drop inlets require handwork on base courses. The screed is lifted over the structure and relocated on the opposite side. Then the area around the structure is filled in by hand. When the surface course is placed, the screed should ride across the structure and the excess material removed.

When placing base courses next to the curb it is advisable to operate the paver 3 to 4 in (75 to 100 mm) away from the curb. This prevents the screed from becoming jammed or bound by the curb. Material is allowed to feed out of the spreading screw chamber by raising the end plate and spreading by hand. The loose hand finished material must be slightly higher than that placed by the screed to compensate for the lack of compaction by the screed.

After one or two truckloads have been spread, both the Department's Technician and the Contractor's Technician should check the unrolled depth and rate of spread of the mix. The unrolled depth is determined with a ruler. To determine the rate of spread, they must determine the area covered and the weight of material spread over that area. The specifications usually require that the mix be placed at a specified rate in pounds per square yard (kilograms per square meter) at an approximate depth. By dividing the mass (weight) in pounds (kilograms) of mix placed by the number of square yards (square meters) covered will give the average rate in pounds per square yard (kilograms per square meter) being placed.

Once the proper adjustments are made on the screed control system such that the required rate of mix is being placed, an occasional check of the pounds per square yard (kilograms per square meter) being placed and an occasional check on the depth of the unrolled mix will be sufficient to determine if the correct spread is being maintained.

If the specifications require that the mix be placed at a specified depth in inches (millimeters), the compacted depth of the mix should also be checked so that a correlation ratio can be established between the loose depth and compacted depth.

Note: See "Determination of Rate of Spread and Tonnage Required" in Section 10 of this Manual.

9.6.2 Fundamentals of Screed Operation

The screed unit, exclusive of any type of automatic control, is attached to the tractor unit by two tow arms that pivot about a hinge point (tow point) just beyond the midpoint of the paver. In manual operation, these tow arms are locked in a fixed position at the tow point. The basic principle of screed operation is that when pulled into the material deposited in front of it by the spreading screws (augers), it floats on the mix, moving up or down seeking the level where the forces acting on the screed are in equilibrium and the path of its flat bottom surface is approximately parallel to the direction of pull.

Forces acting on the screed unit during paving operations are shown in Fig. 9-6. While the paver is moving, the pull, (P), at the pivot point always exceeds the horizontal resistance, (H), on the screed plate. When the thickness of the mat is to be increased, the screed is tilted upward to allow more material to crowd under it. The result is that the vertical uplift, (V), exceeds the weight, (W), and causes the screed plate to rise. As it rises, V becomes less until it again equals W, at which time the vertical motion stops and the screed plate once again moves only in the horizontal direction in a path parallel to the direction of pull. The thickness of the mat is changed by either by tilting the screed plate using the screw or jack or by moving the pivot point of the pull arm vertically, assuming all other factors remain uniform.

"Nulling out the screed" is an expression used to describe adjusting the screed angle on both ends so that the screed plate rests flatly on starting blocks or other surface. When both the front edge and the rear edge of screed plate rest firmly on a surface, the adjusting screws will have a limited amount of free rotary movement. This means that the angle of attack of the screed is in the neutral or flat position. This will indicate that the screed is nulled out. CAUTION: Before attempting to null out the screed, be sure the screed lift is not restricting the full weight of the screed from resting on the surface or surfaces upon which

it is being nulled out. Once the screed is nulled out, it is good practice to increase the angle of attack by turning each depth screw handle approximately one full turn (depending on the make of paver) from the nulled out position of the screed and start paving, checking and adjusting until proper mat depth is obtained. This practice usually results in an attack angle very close to that need to maintain the desired depth.

The weight of the screed exerts a compacting and compressing force as it passes over the asphalt mix. To compensate for this, ANGLE OF ATTACK is an adjustment, which raises only the front edge of the screed by an amount that causes the screed to climb enough to equal the amount of compaction by the screed. Exact angle of attack is always an unknown factor. Variation in mixes, temperature of mix, and paving speed are all variables, which effect the amount of angle of attack that is required. These variations must be kept to a minimum if a smooth mat is to be accomplished.

In order to keep the forces acting on the screed constant, the amount of material carried ahead of the screed should be kept uniform in height. Variation will likely result in surface roughness. This will require maintaining sufficient material in the hopper to supply the spreading screws (augers) with just enough mix to cover the midpoint of the screws out to their ends. The material feed system, including the flow gates, augers, automatic feed control sensors and paver speed should be set so the slat conveyors and augers feeders operate as close to 100% of the time as possible.

The screed is continually attempting to bring or keep all of the forces in balance. This is why <u>it is important to set the flow gates properly, keep the slat feeders operating uniformly and as continuously as possible, keep a uniform height of material in front of the screed, not over-control the screed, and maintain a uniform forward speed of the paver</u>. <u>The temperature of the mix must be kept uniform</u> so that the viscosity of the mix does not change and influence the balance of forces acting on the screed. Uniformity of the mix, uniform and continuous operation of the paver and proper adjustment are the keys to smooth, dense pavements.

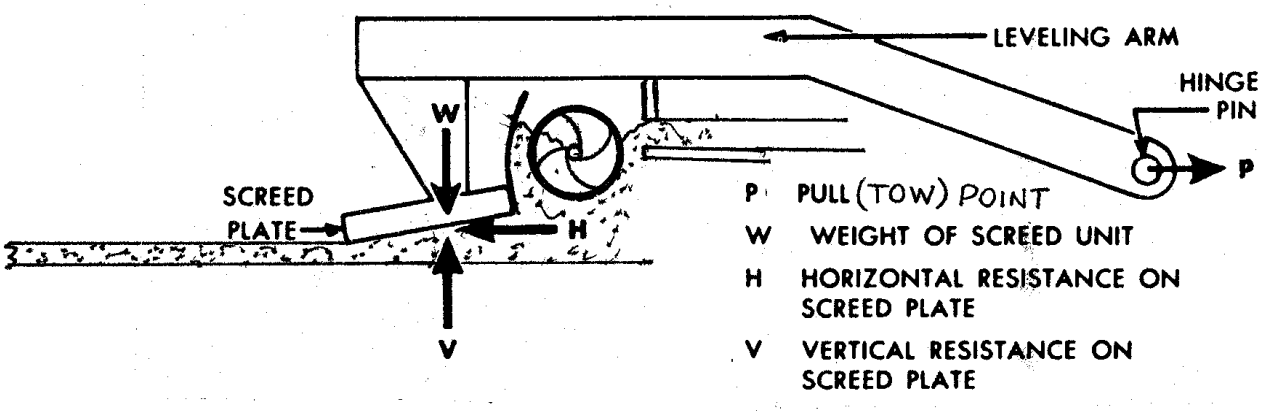

Figure 9-6
Forces Acting on the Screed During Paving Operations

The asphalt mixture must be spread and finished to the required grades, cross sections, thickness and widths shown on the plans and typical sections and to uniform density and texture by the paver. Many working conditions and adjustments can be checked only by the end results or more specifically, by the quality of the mat that is placed. However, before work begins, certain checks on items that would obviously affect the work should be made.

The paver must be <u>equipped with a fully activated and heated screed plate</u> which is of adequate length to spread and finish the full uniform width travel lane being placed. <u>The use of strike off devices, either mechanically or manually operated shall not be permitted in spreading and finishing the mixture</u>

within the uniform width travel lane(s) since poor texture, low densities in these areas and an uneven mat are likely to occur. Strike off devices may be permitted where curve widening, tapers, varying pavement widths and aprons are occasionally encountered.

Where the required uniform width of mat placement is different from the basic paver screed width, the use of cut-off shoes may be used to reduce the width of the mat being placed. Likewise, factory manufactured, bolt on extensions capable of being heated and vibrated may be used to extend the width beyond the basic width of the screed. Extensions, which will produce a finished mat of the same texture and density as that of the basic screed, must be used. When screed extensions are used, the specifications require augers to be extended if necessary in order to maintain a uniform head of mix in front of the full length of the extended screed.

Shoulder Wedge

In 2010, the Federal Highway Administration (FHWA) launched the Every Day Counts (EDC) initiative designed to identify and deploy innovation to enhance the safety of roadways. As part of the EDC initiative, FHWA encouraged the use of "Safety Edge." Safety Edge is a wedge of asphalt on the outside edge of a roadway pavement formed at a 30-degree angle to help minimize the problem of drop-offs. Roadway departures account for 53 percent of fatal crashes in the US. As a vehicle departs a roadway, drop-off or vertical pavement edges can create a "tire-scrubbing" condition and result in over-steering as the driver attempts to return to the roadway. Safety Edge aims to help that situation by providing a 30-degree angled edge for a vehicle to steer back onto the roadway to reduce over-steering into the adjacent lane.

At NCDOT, Safety Edge was used on a few sections of roadway from 2008 to 2010. In 2011, NCDOT implemented a pilot program to use the angled edge based on a draft Special Provision titled "Shoulder Wedge" on eight sections of roadway. By the end of 2011, NCDOT had placed over 160 miles (320 lane miles) of Shoulder Wedge.

When required by the contract, the Contractor shall form the edge in accordance with the Shoulder Wedge special provision and the details in the plans. The shoulder wedge should only be used on the surface layer(s) of asphalt. The shoulder wedge is formed by using a mechanical device or "shoe" installed onto the paver screed, whether internal or external, to create an edge by applying pressure to the asphalt being placed on the outside edge of the pavement. Instead of allowing the asphalt to fall from the screed, the shoe is engaged and forms an edge from that asphalt which has shown to be more durable. Regardless of the type of shoe being used to form the edge, the Contractor and Roadway Technician should ensure that the shoe has been properly engaged to create the 30-degree angled shoulder wedge. It is recommended to disengage the device when approaching paved driveways and side roads to allow for a smoother tie and hand work that typically will apply to these conditions. Failure to disengage the device can result in an unsatisfactory transition at these locations or damage to the device, especially if the drive or side road slopes above the roadway being paved.

9.6.3 Use of Automatic Screed Controls

A 30 foot (9.1 meter) minimum length mobile grade reference system or a non-contacting laser or sonar type ski with at least four referencing stations mounted on the paver at a minimum length of 24 feet shall be used to control the longitudinal profile when placing the initial lanes and all adjacent lanes of all layers, including resurfacing and asphalt in-lays, unless otherwise specified or approved by the Engineer. A joint matching device short (6 inch shoe) may be used only when approved by the Engineer.

Utilize the automatic slope control system unless otherwise approved by the Engineer. The Engineer may waive the use of automatic slope controls in areas where the existing surface (subgrade, base, asphalt layer, etc.) exhibits the desired cross slope of the final surface. The Engineer may also waive the use of automatic slope controls in areas where the use of such equipment is impractical due to irregular shape or cross section (such as resurfacing). When the use of the automatic slope controls is waived, the Engineer may require the use of mobile grade references on either or both sides of the paver. Manual screed operation will be permitted in the construction of irregularly shaped and minor areas, subject to approval. Waiver of the use of automatic screed control does not relieve the Contractor of achieving plan grades and cross slopes.

In the case of malfunction of the automatic screed control equipment, the paver may be manually operated for the remainder of the work day provided this method of operation produces acceptable results. Do not resume work thereafter until the automatic system is functional.

The primary purpose of automatic screed controls is to produce a smoother pavement layer than the paver can accomplish by its self or the screed operator can accomplish by continually changing the setting of the thickness-control cranks. The automatic screed control functions by maintaining the elevation of the screed tow points in relation to a reference other than the wheel base of the paver itself. The elevation of the tow point is kept at a constant elevation in relation to a given grade reference. Automatic screed controls have five main components: (1) Grade sensor, (2) Pendulum, (3) Control box, (4) Command panel, and (5) Motors or cylinders to change the screed tilt. A diagram showing the components of one make of automatic screed control is shown in Figure 9-7. The automatic screed controls operate on the principle that if the screed tow point(s) are made to follow a smooth line and all other forces acting on the screed are kept constant, a smoother pavement profile grade will result, regardless of irregularities in the surface being paved. Slope, or transverse profile, is controlled by a pendulum adjusted for a particular slope, or may be controlled by a second profile control system on the opposite side of the paver.

Once the screed is set for the desired depth of spread, the automatic system takes over to produce a smooth mat. The command panel, the grade sensor, and the pendulum feed electronic impulses to a control box which activates the motors or hydraulic cylinders to change the relative elevation of the screed arm pull points, thereby changing the screed tilt (angle of attack) and automatically compensating for road surface irregularities.

The automatic screed controls get information from a sensing device riding on either an erected stringline that has been set as the grade reference, from a mobile reference device capable of averaging the grade over a minimum 30 foot (9 meters) distance or a non-contacting laser or sonar type ski with at least four referencing stations mounted on the paver at a minimum length of 24 feet, a joint matching device or some combination of these. The devices references from either the subgrade, base, adjacent lane, curb, or gutter or an erected stringline. These devices can be used for overlaying old pavements or for new construction. Sometimes a carefully installed stringline is recommended for new construction. The stringline can be placed on either or both sides of the paver. When placing the initial lanes and adjacent lanes of all courses, the paver must be equipped with a mobile reference device and should always be used where possible. This will automatically improve the pavement smoothness as adjacent lanes and courses are placed. When done properly provide depth control such that when completed it will match the depth of the existing lane. **The joint matching device (short ski) is used only when permitted by the Engineer. The joint matcher should not be permitted to ride on the gutter when placing the final layer in a curb and gutter section.** On all lanes of all layers, a minimum 30 foot mobile reference (ski pole) or non-contacting laser or sonar type ski with at least four referencing stations mounted on the paver at a minimum length of 24 feet should be used when placing the initial lane and all adjacent lanes**.** Paver manufacturers

are now recommending using the long referencing devices even when matching joints of adjacent lanes on the final layer. Different types of grade followers are shown in Figs. 9-8, 9-9, and 9-10.

It should be noted that new automatic screed control systems are now available that utilize sonic and/or laser technology in lieu of or in conjunction with the 30-40 foot (9-12 meter) mobile string line. These systems have been used very successfully and are permissible under current NCDOT specifications.

Sensors on pavers equipped with electronic controls can be checked by varying the positions of the sensors relative to the surface being sensed and observing if the power on the screed controls respond and make the correct compensating adjustment in the screed pull points.

The sensor riding on either an erected stringline or mobile stringline transmits signals to the screed control to produce a paved mat behind the screed at a predetermined grade. The cross slope of the screed is normally set on the control panel.

When a sensor or grade follower is linked in with a short ski, long ski, or other traveling reference device, the average thickness or average rate of spread may be adjusted by raising or lowering the sensor. Do not use the screw jacks to change the angle of attack of the screed. The average rate of spread or thickness may then be rechecked as explained earlier.

If the mat being placed is uniform and satisfactory in texture, and the thickness is correct, no screed adjustments are required. But when adjustments are required, they should be made in small increments and time should be allowed between the adjustments to permit the paver screed to complete reaction to the adjustments sequentially. <u>The paver must travel the equivalent of approximately 5 lengths of the leveling or tow arm before the adjustment is fully accomplished.</u>

It is equally important that the thickness controls on the screed not be adjusted excessively either in amount or frequency. Every adjustment of the thickness controls results in a change in elevation of the mat surface. Excessive changes in the surface elevation at the edge of the first mat are extremely difficult to match in the companion lane when constructing the longitudinal joint.

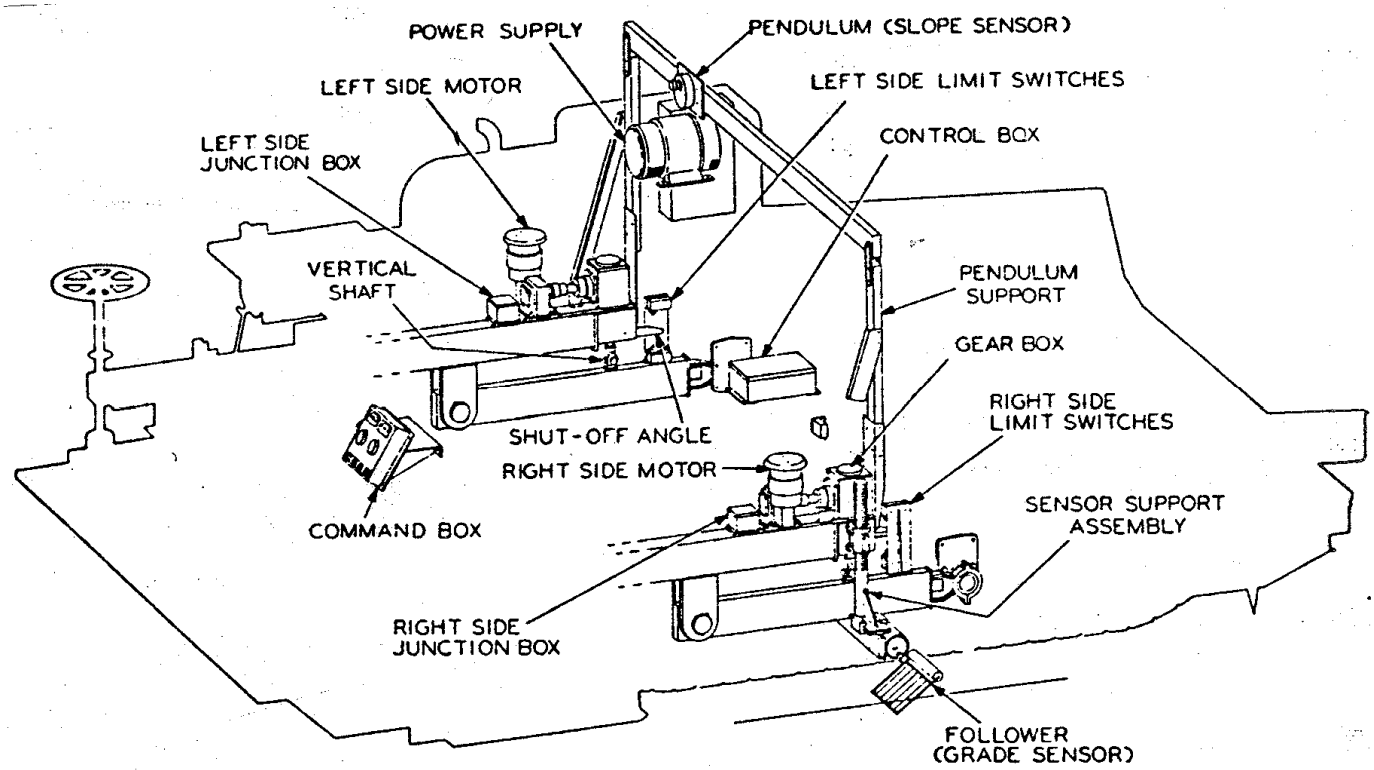

Figure 9-7
Components of an Automatic Screed Device

The automatic screed controls should be used all times possible because it can, in most cases, do a much better job than the manual control. If the automatic control equipment malfunctions, the manual controls may be used for remainder of that work day, provided satisfactory laydown is being achieved.

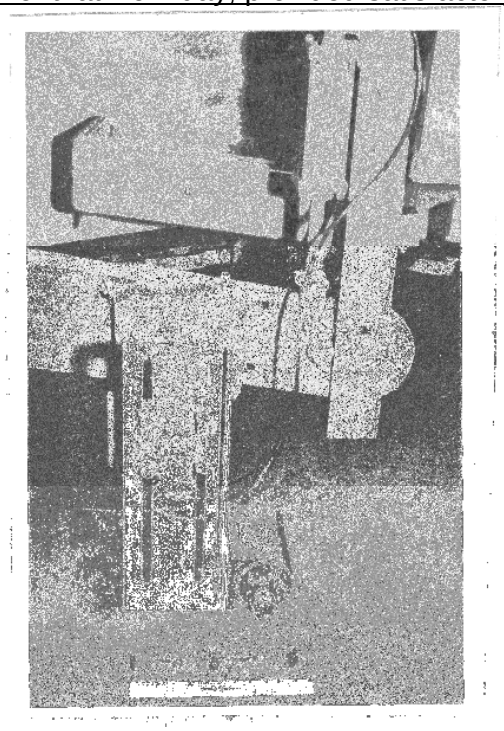

Figure 9-8
Short Mobile Grade Reference (Ski) (Joint Matching Device)

Figure 9-9

Long Mobile Grade Reference System (Sonic Type with 4 Referencing Sensors)

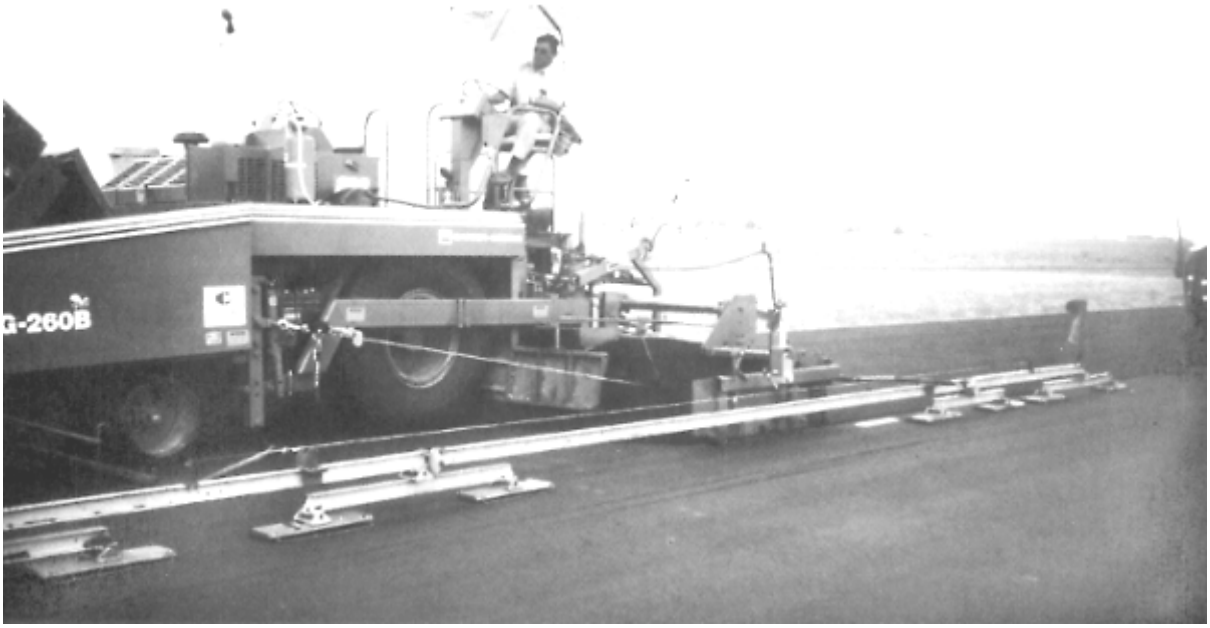

Figure 9-10
Long Mobile Grade Reference (Ski with Stringline)

9.6.4 Handwork

Hand raking behind the screed should not be done unless absolutely necessary. The most uniform surface texture can be obtained by keeping hand work behind the screed to a minimum. This is especially true with crushed stone mixtures and mixtures requiring stiff graded asphalt binders. If the operations ahead of the paver are properly performed, if the equipment is in good condition and properly adjusted, and if the paver is not placing the mix at an excessive rate of speed, there should be little or no need for hand work. The raker, however, should be alert to a crooked edge on the mat so he can straighten it immediately. If the paver operator properly follows the guide line, the back work will not be necessary.

There are places on many jobs where spreading with a paver is either impractical or impossible. In these cases, hand spreading may be permitted. The Engineer will waive the requirement for use of pavers for spreading and finishing where irregularities or obstacles make their use impractical. Spread, rake, and lute the mixture by hand methods or other approved methods in these areas.

Placing and spreading by hand should be done very carefully and the material distributed uniformly so there will be no segregation of the coarse aggregate and the asphalt mortar. When the asphalt mix is dumped in piles it should be placed far enough ahead of the crew members that are shoveling to necessitate moving the entire pile Also, sufficient space should be provided for the workmen to stand on the base and not on the mixed material. If the asphalt mix is broadcast with shovels, almost complete segregation of the coarse and fine portions of the mix will result. A mixture placed by hand will have a different surface appearance than the same mixture placed by a machine.

The material should be deposited from shovels into small piles and spread with lutes. In the spreading process, all material should be thoroughly loosened and evenly distributed. Any part of the mix that has formed into lumps and does not break down easily should be discarded. After the material has been placed and before rolling starts, the surface should be checked with templates and straightedges and all irregularities corrected.

9.7 COMPACTION OF ASPHALT PAVEMENTS - GENERAL

9.7.1 The Need for Compaction

Compaction is the process of compressing a given volume of asphalt hot-mix into a smaller volume. Compaction is accomplished by pressing the binder coated aggregate particles closer together, thereby reducing the air voids (space) in the mix and increasing the density (weight to volume ratio) of the mixture.

The need for a pavement to be compacted to the required density is better understood when the effect of air, water, and traffic on an under-compacted pavement is realized. The voids in an under-compacted mix tend to be interconnected and therefore, permit the intrusion of air and water throughout the pavement. Air and water carry oxygen which in turn, accelerates the oxidation of the asphalt binder in the mix, causing it to become brittle. Consequently, the pavement itself will ultimately fail as it can no longer withstand the repeated deflections due to traffic loading. The internal presence of water at freezing temperatures can also cause an early failure in the pavement due to expansion of the freezing water.

Compaction is considered successful when the finished mat reaches the minimum specified density for that mix type. NCDOT Specifications require that all Superpave mixes be compacted to a minimum of 92.0 percent of the maximum specific gravity (G_{mm}), except for SF 9.5A and S 4.75A mixes, which shall be 90.0 and 85.0 percent of maximum specific gravity (G_{mm}), respectively.

A pavement that has not been adequately compacted during construction has not developed the full potential design strength and therefore, may push, shove, and rut from traffic that is utilizing the pavement. However, unless the mix is properly designed and adequate voids remain in the compacted mix, the pavement will likely flush and tend to become unstable due to further reduction of void content under traffic and/or thermal expansion of the asphalt. The desired as-constructed void content is approximately 8 percent or less for the dense-graded mixes. At this level, the voids are usually not interconnected. When the air void content is too high, the pavement will tend to ravel and disintegrate. When the air-void content is too low, there is a danger of the pavement flushing and becoming unstable.

Compaction is accomplished by arranging the aggregate particles closer together in a position in which the asphalt binder can hold them in place. Compaction accomplishes two important goals:

(1) It develops the strength and rut resistance of the mix
(2) it closes passages through which water and air would otherwise penetrate thus causing faster aging, freeze-thaw damage, and stripping.

Compaction is the final stage of hot-mix asphalt paving operations. It is the stage at which the full strength of the mixture is developed and the smoothness and texture of the mat is established. Therefore, the technician must be particularly observant of the compaction process.

In addition to keeping accurate detailed records and observing that the operation is performed safely, the Technician must also be sure that compaction is done properly and that the finished pavement meets all specifications. To achieve this, the technician must understand the compaction procedure and the equipment involved. The Technician must acquire samples of the compacted mat or take readings with special instruments to determine mix density and smoothness.

9.7.2 Compaction Specifications

The following is quoted directly from Article 610-9 of the Standard Specifications. However, the Technicians should always refer to the contract for any specific rolling, compaction, and equipment requirements.

Immediately after the asphalt mixture has been spread, struck off, and surface and edge irregularities adjusted, thoroughly and uniformly compact the pavement. Compact the mix to the required degree of compaction for the type of mixture being placed.

Provide sufficient number and weight of rollers, except as noted, to compact the mixture to the required density while it is still in a workable condition. Obtain approval of equipment used in compaction from the Engineer prior to use. Where uniform density is not being obtained throughout the depth of the layer of material being tested, change the type and/or weight of the compaction equipment as necessary to achieve uniform density even though such equipment has been previously approved.

Compact all final wearing surfaces, except open-graded asphalt friction course, using a minimum of 2 steel wheel tandem rollers, unless otherwise approved. Pneumatic-tired rollers with 2 tandem axles and smooth tread tires may be used for intermediate rolling.

Limit rolling for open-graded asphalt friction course to one coverage with a tandem steel wheel roller weighing a maximum of 10 tons (9.1 metric tons), with additional rolling limited to one coverage with the roller where necessary to improve the riding surface.

Steel wheel tandem vibratory rollers which have been specifically designed for the compaction of asphalt pavements may be used on all layers 1 inch (25 mm) or greater in thickness during the breakdown and intermediate rolling phase. Do not operate vibratory rollers in the vibratory mode during the finish rolling phase on any mix type or pavement course, open-graded asphalt friction course, or on permeable asphalt drainage course.

When vibratory rollers are used, use rollers that have variable amplitude and frequency capabilities and which are designed specifically for asphalt pavement compaction. Provide rollers equipped with controls which automatically disengage the vibration mechanism before the roller stops when being used in the vibratory mode.

The Engineer may prohibit or restrict the use of vibratory rollers where damage to the pavement being placed, the underlying pavement structure, drainage structures, utilities, or other facilities is likely to occur or is evident.

Do not use rolling equipment which results in excessive crushing of the aggregate or excessive displacement of the mixture.

In areas inaccessible to standard rolling equipment, thoroughly compact the mixture by the use of hand tampers, hand operated mechanical tampers, small rollers, or other approved methods.

Use rollers which are in good condition and capable of being reversed without backlash to compact the mixture. Operate rollers with the drive wheels nearest the paver and at uniform speeds slow enough to avoid displacement of the mixture. Equip steel wheel rollers with wetting devices which will prevent the mixture from sticking to the roller wheels.

Begin compaction of the material immediately after the material is spread and shaped to the required width and depth. Carry out compaction in such a manner as to obtain uniform density over the entire section. Perform compaction rolling at the maximum temperature at which the mix will support the rollers without moving horizontally. Complete the compaction (including both breakdown and intermediate rolling) prior to the mixture cooling below a workable temperature. Perform finish rolling to remove roller marks resulting from the compaction rolling operations.

9.7.3 Asphalt Roller Types

Reference should be made to Article 610-9 which addresses compaction methods and equipment. The three basic types of rollers utilized for compaction of asphalt pavements are:

(A) Steel-Wheeled Rollers

Steel-wheeled rollers are of two basic types: Three-wheel and tandem.

Three-wheel rollers are equipped with two drive wheels on the same axle and a steering drum. (Figure 9-11). The drive wheels are about 5 feet (1.5 meters) in diameter and 18 to 24 inches (450 to 600 mm) wide. The steering roll is smaller in diameter but wider. Weights vary from 5 to 14 tons (metric tons). Three-wheel rollers are used mostly for breakdown or initial rolling of asphalt mixtures.

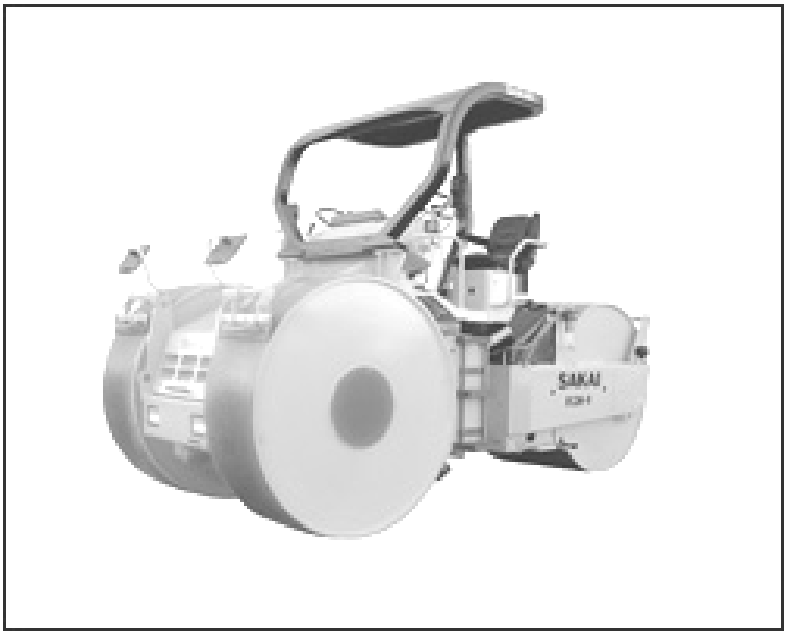

Figure 9-11
Three-wheeled Roller

Tandem rollers may be either two-axle or three-axle. Two-axle tandem rollers (Figure 9-12) vary in weight from 3 to 14 tons (metric tons) or more. Most have wheels to which ballast can be added to increase the weight.

Three-axle tandem rollers are made in sizes ranging from 10 to more than 20 tons (metric tons). Most of these rollers can be increased in weight by adding ballast to the wheels. The center axle roll on the three-axle tandem rollers is arranged so that a large part of the total weight of the roller can be applied there, as required by high spots.

Steel-wheel rollers should be checked for wear on wheel rims. A sharp metal straightedge may be used for this check. The roller should not be used if grooves or pits have worn into the rolling drum. These rollers have scrapers for keeping rollers clean and wetting pads to keep rollers wet, so they do not pick up asphalt during the rolling operation. If they are worn excessively, they should be replaced.

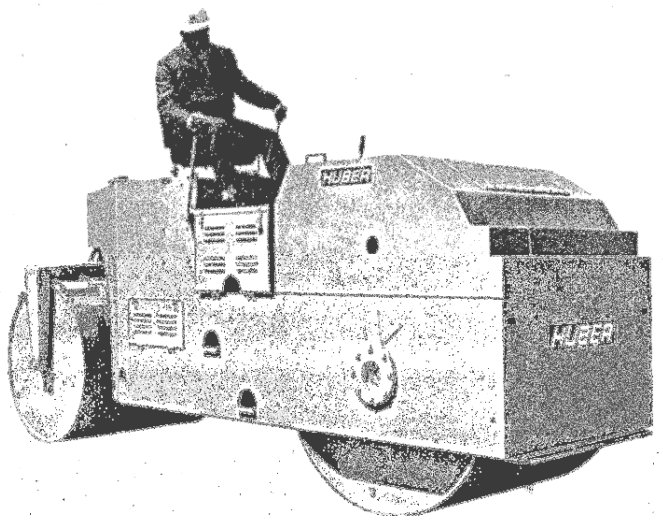

Figure 9-12
Two Axle Tandem, Steel Wheel Roller

(B) <u>Pneumatic-Tired Rollers</u>

Self-propelled pneumatic tired rollers (Figure 9-13) have two to eight wheels in front and four to eight wheels in the rear. The wheels on these rollers generally oscillate. (axle moves up and down) Self-propelled pneumatic tired rollers vary in weight from 3 to 35 tons (metric tons). Ballast can be added to the machines to increase the weight.

Several models of self-propelled pneumatic tired rollers have a device to change tire inflation while the roller is operating. This "inflation-on-the-run" system automatically maintains any present tire pressure or can raise or lower inflation pressure while the roller is operating. Some compacting conditions and requirements require different inflation pressures. It is important for all of the tires be the same ply and have the same air pressure. This ensures all tires apply the same compactive effort on the pavement.

Figure 9-13
Self Propelled Pneumatic-tired Roller

(C) Vibratory Rollers

Vibratory rollers are made with one or two smooth surfaced steel wheels 3 to 5 feet (1 to 1.5 meters) in diameter and 4 to 6 feet (1.2 to 2 meters) in width and which are specifically designed for asphalt pavement compaction. (Figure 9-14).

Vibratory rollers vary in static weight from 1 1/2 to 17 tons (metric tons). Some large tandem roller models have provisions for vibrating the third axle unit. Vibratory rollers normally may be used for compacting any type of asphalt mixture, provided the appropriate amplitude, frequency and speed is selected for the type mixture and thickness being placed.

Vibratory rollers may be used on all layers of asphalt pavements, except that operation in the vibratory mode will be permitted only during the breakdown and intermediate rolling phase on final wearing surfaces 1 inch (25mm) or greater in thickness. Operation in the vibratory mode will not be permitted during the rolling of open-graded asphalt friction course, during the finish rolling phase on any mix type or pavement course, or when the layer thickness is less than 1 inch (25mm).

The Engineer may prohibit or restrict the use of vibratory rollers where damage to the underlying pavement structure, drainage structures, utilities, or other components is likely to occur or is evident.

Three important factors to consider for vibratory roller operations:

1. Frequency (vpm),
2. Amplitude (height of bounce), and
3. Roller speed.

Recommended settings on vibratory rollers for different mixes are as follows:

Type Mix	Frequency (VPM)	Amplitude	Roller Speed
25.0, 19.0 mm ≥ 3” thickness	3000 - 3200	high/low amplitude	2-3 mph (3-5 kph) (normal walking speed)
12.5, 9.5, 4.75 mm ≥ 1.5” thickness	3000 - 3400	low amplitude	2-3 mph (3-5 kph) (normal walking speed)
Consult Manufacturer’s recommendations for proper settings.			

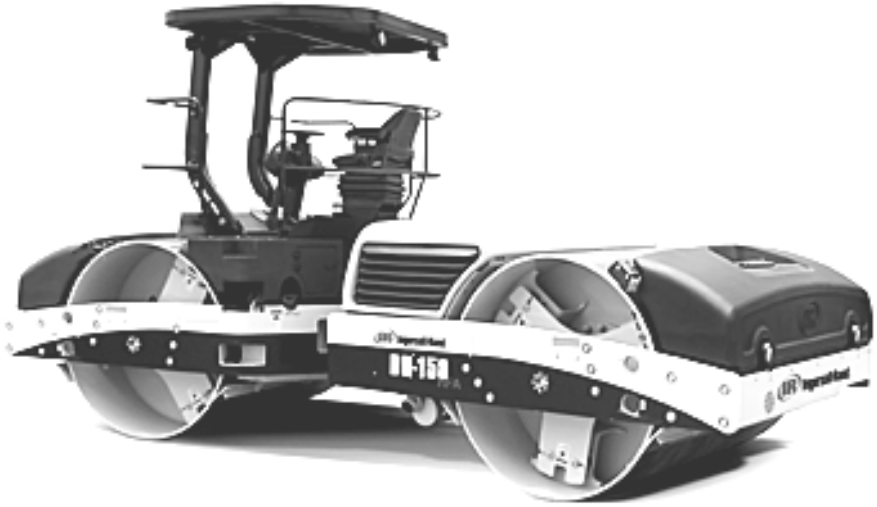

Figure 9-14
Self Propelled Tandem Vibrating Roller

9.7.4 Compaction Equipment Inspection

Prior to beginning paving operations, the Resident Engineer and/or the Roadway Technician must inspect the Contractor's compaction equipment to see that it meets all requirements of the Specifications and is in good working order. If the equipment meets Specifications and is in satisfactory operating condition a statement shall be entered in the Technician's Daily Diary. If it is not, the Contractor should be advised accordingly and corrective actions taken before paving begins. See the Checklist in this Section.

Before any of the rollers are used on a project they should be checked to see that they are in good mechanical condition and to assure their compliance with project specifications, if any. Where applicable, the following should be checked on all rollers:

1. Total weight;
2. Weight per unit of width (steel-wheeled rollers);
3. Average ground contact pressure (pneumatic-tired rollers);
4. Mechanical condition, Hydraulic Fluid & Fuel Leaks
5. Precise steering.

9.8 ROLLING AND COMPACTION PROCEDURES

Compaction of the pavement material must begin immediately after the material is spread, struck off, shaped to the required width, depth, cross-section, and edge irregularities adjusted. The mix must be compacted to the required degree of compaction for the type of mixture being placed. Compaction must be carried out in such a manner as to obtain uniform density over the entire section. Perform compaction rolling at the maximum temperature at which the mix will support the rollers without moving horizontally. Complete the compaction (including both breakdown and intermediate rolling) prior to the mixture cooling below a workable temperature. Perform finish rolling to remove roller marks resulting from the compaction rolling operations.

Most asphalt mixtures compact quite readily if spread and rolled at temperatures that assure proper asphalt viscosity. Rolling should start as soon as possible after the material has been spread by the paver, but should be done with care to prevent unduly roughening the surface.

A mix that is relatively stable at high temperatures as it leaves the spreader is compacted by the vertical movement of the aggregate particles under the roller. On any paving mixture the roller wheel must settle into the mix until the area of contact between the wheel and mix multiplied by the resistance of the mix is equal to the weight on the roller wheel. If the hot mix is quite firm, the roller will not cause any horizontal mix displacement.

Horizontal displacement results from apparent crawling of the mix ahead of the roller and the forming of ridges on either side of the roller path. If there is no horizontal displacement, there will be virtually no crawl or ridges along the edge of the roller path. (Fig. 9-15)

Horizontal displacement also results in a rough and uneven surface, thus defeating the intentions of careful grade control and good screed operation of the asphalt paver. Horizontal movement of the mix often occurs due to the breakdown roller being operated too fast.

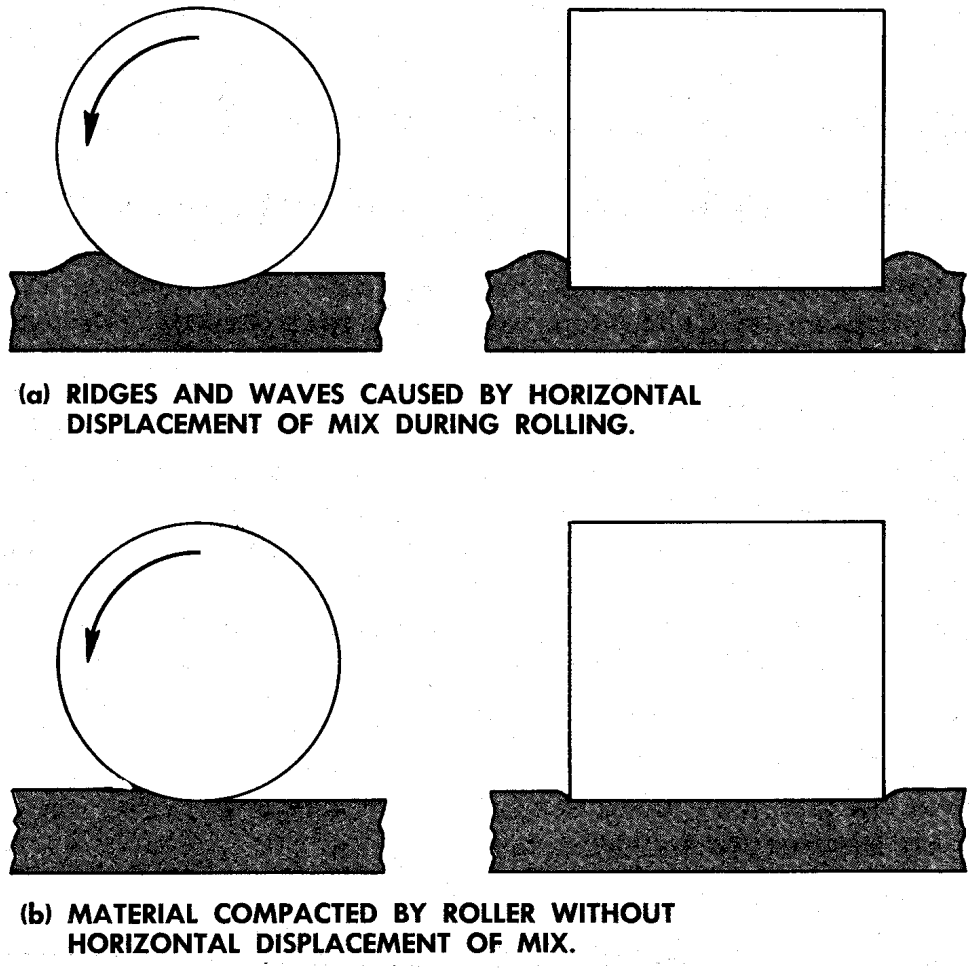

Figure 9-15
Impressions Made by Roller Wheel on Freshly Spread Hot-Mix Asphalt Pavement

Mix temperature is a principal factor affecting compaction. Compaction can only occur while the asphalt binder is fluid enough to act as a lubricant. When it cools enough to act as an adhesive, further compaction is extremely difficult to achieve. The best time to roll an asphalt mixture is when its resistance to compaction is the least, while at the same time it is capable of supporting the roller without excessive shoving.

The best rolling temperature is influenced by the internal particle friction of the aggregates, the gradation of the mix, and the viscosity of the asphalt. Therefore, it can change if any of these factors change. The critical mix temperature in an asphalt concrete paving project is the temperature at the time of compaction. This should determine the temperature at which the plant is to produce the mixture. It is best to be able to compact the mix as quickly as possible after being spread, which means that it's best for the mixing temperature and the compacting temperature to be reasonably close to the same.

During rolling, roller wheels are kept moist with only enough water to avoid picking up material. **Fuel oil and Kerosene shall not be used** to moisten roller wheels since it will damage the mix. Rollers should move at a slow but uniform speed with the drive roller or wheels nearest the paver. The speed should not exceed 3 mph (5 kph) for steel-wheeled breakdown rollers or 5 mph (8 kph) for pneumatic-tired rollers. Rollers must be kept in good condition, capable of being reversed without backlash. The line of

rolling should not be suddenly changed or the direction of rolling suddenly reversed, thereby displacing the mix. Any pronounced change in direction should be made on stable material.

If rolling causes material displacement, the affected areas are loosened at once with lutes or rakes and restored to their original grade with loose material before being re-rolled. Heavy equipment, including rollers, should not be permitted to stand on the finished surface before it has thoroughly cooled or set.

Rolling freshly placed asphalt mix is generally done in the following order:

1. Transverse joints,
2. Longitudinal joints (when adjoining a previously placed lane),
3. Initial or breakdown rolling,
4. Second or intermediate rolling, and
5. Finish rolling.

When paving in echelon, 2 or 3 in. (50 or 75mm) of the edge that the second paver is following are left unrolled when the joint between the lanes is rolled. Edges should not be exposed for more than 15 min. without being rolled. Particular attention must be given to the construction of transverse and longitudinal joints in all courses.

<u>All final wearing surfaces except open-graded asphalt friction course shall be compacted using a minimum of 2 steel wheel tandem rollers.</u> Steel wheel tandem vibratory rollers, which have been specifically designed for the compaction of asphalt pavements, may be used. **Vibratory rollers, operating in the vibratory mode, may generally be used on all pavement layers 1" (25mm) or greater in thickness during the breakdown and intermediate phases of rolling.** Operation in the vibratory mode will not be permitted during the finish rolling phase on any mix type or pavement course or when the layer thickness is less than 1 inch (25mm).

Vibratory rollers must have variable frequency and amplitude capability. The rollers must be equipped with controls, which automatically disengage the vibration mechanism before the roller stops when being used in the vibratory mode. Vibratory rollers used on asphalt mixtures should normally be operated at high frequencies and low amplitudes and specifically designed for asphalt compaction.

Rolling of open-graded asphalt friction course will consist of <u>one</u> coverage with a tandem steel wheel roller weighing a maximum of 10 tons (9.1 metric tons) with additional rolling limited to <u>one</u> coverage where necessary to remove roller marks. Excessive rolling should not be allowed inasmuch as this leads to possible breakdown of the aggregate, thereby reducing the drainage capacity of the friction course layer. Vibratory rollers may be used on friction course provided they are operated <u>in the static mode.</u>

On all other mixtures, the number and weight of rollers shall be sufficient to compact the mixture to the required density while it is still hot and in a workable condition. Vibratory rollers may be used, as specified in above paragraphs, provided satisfactory results are obtained, excessive displacement or crushing of the aggregate does not occur, and no vibratory roller marks (indentations) remain in the finished surface. <u>The Engineer may prohibit or restrict the use of vibratory rollers where damage to the underlying pavement structures, drainage structures, utilities, adjoining structures, or the pavement itself is likely to occur or is evident.</u>

The use of a pneumatic tired roller is optional for compaction purposes on all mixes, unless otherwise required within a contract. Some Project Special Provisions within a contract may require the use of a rubber tired roller, therefore, it is essential that the roadway technician review all contract Project Special Provisions for this possible requirement.

While it is the Contractor's responsibility to determine roller requirements based on contract specifications, the technician is an essential part of this determination. The exact number of coverages

(passes) that will be required to obtain adequate density is initially unknown. This is due to some uncertainty about the mixture's rate of cooling, among other things. These uncertainties are cleared up by careful observation, measuring, and testing during the early stages of the paving operation.

A number of studies have been made on the cooling rates of mixes under varying conditions of mix temperature, lift thickness and base temperature. Temperature is a fairly accurate estimate of the time interval in which density must be achieved. Table 9-2 can be used to determine the allowable time available in order to achieve satisfactory compaction. The allowable time can then be used to determine the number and types of rollers needed on the job.

CESSATION REQUIREMENTS

	Recommended Minimum Laydown Temperatures for Various Thicknesses					
	1/2" / 13mm	3/4" / 19mm	1" / 25mm	1-1/2" / 38mm	2" / 50mm	3" +/ 75mm +
Base Temp. ℉ / ℃	**Mix Temp ℉ / ℃**	**Mix Temp ℉ / ℃**	**Mix Temp ℉ / ℃**	**Mix Temp ℉ / ℃**	**Mix Temp ℉ / ℃**	**Mix Temp ℉ / ℃**
+20-32 / (-7) - 0	----	----	----	----	----	285/141
+32-40 / 0 - 4	----	----	----	305/152	295/146	280/138
+40-50 / 4 - 10	----	----	310/154	300/149	285/141	275/135
+50-60 / 10-16	----	310/154	300/149	295/146	280/138	270/132
+60-70 / 16-21	310/154	300/149	290/143	285/141	275/135	265/129
+70-80 / 21-27	300/149	290/143	285/141	280/138	270/132	265/129
+80-90 / 27-32	290/143	280/138	275/135	270/132	265/129	260/127
+90 / 32	280/138	275/135	270/132	265/129	260/127	255/124
Rolling time, min.	4	6	8	12	15	15

Table 9-2

9.8.1 Factors Affecting Compaction

Major factors affecting compaction can be categorized into five classes. These are:

(A) Mix properties (Aggregate, Binder, and Temperature)
(B) Environmental conditions (See Section 9.4.3)
(C) Layer (lift) thickness (See Section 9.4.3)
(D) Subgrade and Bases
(E) Compaction equipment and procedures

(A) Mix Properties

Properties of various asphalt binders and aggregates have a pronounced effect on the workability of mixes at different temperatures. These properties, and the temperature of the mix at the time of compaction, must be considered when deciding on a compaction procedure.

(1) Aggregate:

Gradation, surface texture and angularity are the primary aggregate characteristics that affect workability of the mix. As the maximum aggregate size or percentage of coarse aggregate in the mix increases, the workability decreases and greater compactive effort is required to achieve target density. Similarly, a rough surface texture, as opposed to a smooth, glassy aggregate surface, results in a more stable mixture and requires greater compactive effort. Mixtures that are produced from gravel material, frequently are more rounded than quarry rock and thus more workable.

Natural sands are often added to mixes in the interests of economy. Too much sand, particularly in the middle particle sizes - around the 0.600 mm mesh sieve - will result in tender mixes (mixes with high workability, but low stability).

Tender mixes are easily overstressed by heavy rollers and too much rolling. They are often susceptible to scuffing and displacement by traffic after several weeks in place.

The fines or filler content in the mix will also affect the compaction process. It is the combination of filler and asphalt that provides the binding force in asphalt hot-mix pavements; therefore, the mix should contain sufficient fines to combine with the asphalt to produce the necessary cohesion when the mix cools. The addition of mineral filler will help to offset the tenderness or slow-setting properties of mixes containing too much sand. Conversely, if a mix contains too many fines it will become "gummy" and very difficult to compact.

(2) <u>Asphalt Binder</u>:

At room temperature asphalt binder is virtually a solid, whereas at 265° - 350°F (130° - 175°C) it is a fluid. For a mix to be properly compacted, the asphalt in it must be fluid enough to permit the aggregate particles to move past one another. In effect, the binder acts as a lubricant during compaction. As the mix cools, the asphalt loses fluidity (becomes more viscous) and becomes stiffer. At temperatures below approximately 185°F (85°C), the asphalt, in combination with the fines in the mix, begins to bind the aggregate particles firmly in place. Consequently, compaction of the mix is extremely difficult once the mix has cooled below a workable temperature.

The grade of asphalt binder that is used and the temperature at which the mix is produced determine its viscosity. Other factors being equal, a higher viscosity asphalt in the mix may require a slightly higher compaction temperature and/or greater compactive effort.

The asphalt quantity in the mix will also affect workability. As the asphalt content increases, the film thickness of the asphalt on the aggregate particles increases. At compaction temperatures, this increased film thickness increases the lubricating effect of the asphalt and up to a certain point makes compaction easier. However, excessive asphalt binder in the mix may cause the mix to be ”tender”, allowing it to push and shove under the rollers and therefore, difficult to compact to the required density.

(3) <u>Mix Temperature</u>:

<u>Mix temperature is one of the principle factors affecting compaction.</u> The temperature at which an asphalt mixture is produced affects both the ease of compaction and the time it takes for the mix to cool below a minimum workable temperature at which densification can normally take place. Up to a certain point the hotter the mix, the more fluid the asphalt and the less resistant the mix is to compaction. The upper limit for mix temperature is approximately 350°F (175°C). Higher temperatures may result in damage to the asphalt. The lower temperature at which compaction is effective is approximately 185°F (85°C). Within these limiting values, 185°-350°F (85°-175°C), the best temperature to begin rolling (compaction) is the maximum temperature at which the mix will support the roller without damaging the mix in any form (i.e. horizontal movement, mix sticking to roller drums, etc.). The upper end of this range, 250°-350°F (120°-176°C), will allow the most densification of the mix during the initial phase of the rolling operation. The complete compaction rolling operation should be finished prior to the mix temperature getting below a workable temperature.

At the time of placement, the mix temperature is uniform throughout the thickness of the mat. However, the top and bottom surfaces cool more rapidly than the interior because they are in contact with the cooler air and subgrade. Heat checking is a rather common occurrence during compaction of asphalt concrete mixes, particularly when the mix is placed in thin lifts. Figure 9-16 is a side view of heat checking in a mix being compacted. Heat checking happens most frequently when the tiller wheel of the roller is in front in the direction of travel during the breakdown pass. The horizontal arrows shown between the surface of the mix and the dotted line represent the horizontal thrust of the tiller wheel in the mix. The curve to the right of the figure represents the temperature profile in a layer approximately 2 inches (50mm) thick. The temperature at the surface is 250°F (120°C). The temp erature at the mid-point is 290°F (143°C), while the temperature at the bottom is between 250°F (120°C) and 260°F (127°C).

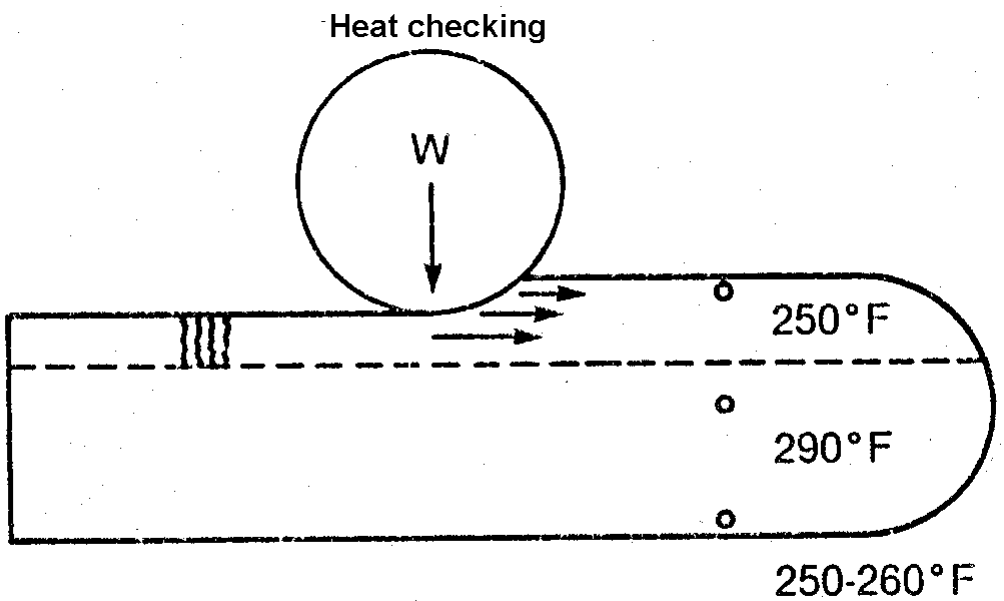

Figure 9-16
Heat Checking (Side View)

The illustration shows the most frequent reason for heat checking. The tiller wheel has sunk some depth into the mix and is exerting a horizontal thrust, which must be resisted by the mix itself.

Since the mix is hottest at its mid-point, the asphalt viscosity is lower there than at the surface. Because of the horizontal force of the wheel, the mix tends to move horizontally at some depth (illustrated by the dotted line in the figure). This means that the mix at the surface must also move. But the surface of the mix is stiffer due to its lower temperature, and responds by cracking in order to move along with the mix at the lower depth. This results in the so-called hairline cracks to the level that horizontal movement is occurring in the mix, generally 3/8 to 1/2 inch (10 to 12.5 mm) in depth. These are shown by the vertical lines behind the roller drum.

A top view of the hairline cracks that result from heat checking is shown in Figure 9-17. They tend to be 3 to 4 inches (75 to 100 mm) long, unconnected with each other. If they were connected and extended, they would form a crescent as shown in this figure. A crescent shaped crack in an asphalt mixture is typical of the slippage movement. This is exactly what happens under a roller when heat checking occurs with the slippage occurring in the mix at the depth shown by the dotted line in Figure 9-16, i.e., the mix is slipping within itself. As in any type of

slippage distress, the crescent opens in the direction of the forces causing the slippage. In the case of heat checking, the hair crack pattern usually opens up in the direction of rolling when the unpowered tiller wheel is leading.

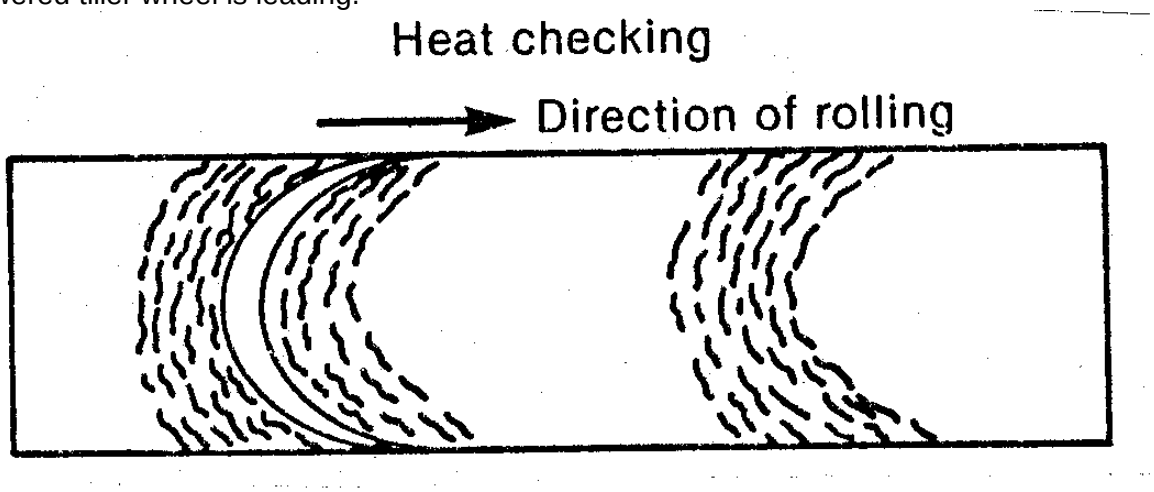

Figure 9-17
Heat Checking (Top View)

The same type of crack pattern shown for heat checking can also occur if slippage is occurring at a greater depth, such as at the surface on which an asphalt lift is being placed. In this case, the cracks have the same general configuration. However, they are longer, open up wider, 1/4 to 1 inch (6 to 25 mm) and extend through the mix to the level of horizontal movement. Again slippage is occurring but at a greater depth.

It is a rare case when heat checking occurs under a drive-wheel of a steel roller. It almost always occurs under the tiller wheel. Steel-wheeled rollers should not have ballast in the tiller wheel. The heavier the weight in the small diameter wheel, the deeper it sinks into the mix with a resulting increase of horizontal force being imparted during the rolling operation, and the greater likelihood of heat checking or other slippage distress.

(B) <u>Environmental Effects</u>

As explained above, the rate at which the mix cools affects the length of time during which density can and must be achieved. Cool air temperatures, high humidity, strong winds, and cool surfaces, either individually or in combination shorten the time in which compaction must take place and may also make compaction more difficult. When any of these conditions exist, it is extremely important that the compaction rolling operation follow closely behind the paver so there is no delay between placing and compacting the mat. The roller must literally "bump the spreader". When thin lifts are being placed from late fall to spring or during cool weather, this is especially true if specification density and tight, smooth surface textures are to be achieved.

(C) Layer Thickness

Generally speaking, it is easier to achieve target density in thicker layer (lifts) of asphalt concrete than in thinner ones. This is because the thicker the mat the longer it retains its heat and the longer the time during which compaction can be achieved. This can be used to advantage when rolling lifts of highly stable mixes that are difficult to compact, or when paving in weather that can cause rapid cooling of thin mats. Alternatively, increased course thickness can permit lower mix temperatures to be used because of the reduced rate of cooling. (See Table 9-2)

(D) Subgrade and Bases

The subgrade or base must be firm and non-yielding under the haul trucks and other construction compaction equipment. Subgrades or bases that show movement under trucks or construction equipment will need additional compaction work or some type of remedial work to overcome the softness. The remedial work could be lime or Portland cement stabilization, or in certain circumstances, removal and replacement with a more suitable material. A yielding subgrade or base would require a thicker HMA pavement in order to support the traffic loading. Haul trucks may also be limited in size and weight to prevent pumping action of base materials.

If remedial action is not performed to correct a yielding subgrade or base, (i.e. a resurfacing project), then it may be difficult to achieve the specified density.

(E) Compaction Equipment and Procedures

Compaction is done by any of several types of compactors, or rollers – vehicles which, by their weight or by exertion of dynamic force, compact the pavement mat by driving over it in a specific pattern.

Compaction aims at producing a mat of specific density (target density) and smoothness. Although the compaction process appears rather simple and straightforward, it is, in reality, a procedure requiring skill and knowledge on the part of the roller operator and the technician. Both must have a thorough understanding of the mechanics of compaction and the factors that affect the compaction effort.

9.8.2 Three Phases of Rolling

There are three basic phases in the compaction process of asphalt pavements:

a. Breakdown phase;
b. Intermediate phase;
c. Finish phase.

Each of these are described in detail below.

(A) Breakdown Rolling

Breakdown rolling is best accomplished with steel-wheeled rollers. Either static-weight or vibratory tandem rollers may be used. Vibratory rollers may be used in the vibratory mode on all mixes, except that on the final wearing surface the thickness must be 1 inch (25mm) or greater before use is permitted.

The weight of the roller used for breakdown rolling depends to a large degree upon the temperature, thickness, and stability of the mix being placed. Generally, a roller weighing from 8 to 12 tons (7 to 11 metric tons) is used for this operation.

Many old compaction specifications recommend the compaction process begin on the low side of the pavement lane and proceed upwards toward the high side. With modern compaction equipment and more stable mixes, this process is usually unnecessary unless the superelevation is extreme or the mix lift is thick in relation to its aggregate size.

When adjoining lanes are placed, it is normally best to compact the longitudinal joint by placing the majority of the roller on the hot (new) mat and overlapping the joint by a distance of approximately 6 inches over the cold mat. This way the majority of the compaction effort is where it is needed - on the new mat.

(B) <u>Intermediate Rolling</u>

Second or intermediate rolling should closely follow breakdown rolling while the asphalt mix is still plastic and at a temperature that is still well above the minimum temperature at which compaction can be achieved, preferably 225°- 250°F (107°- 120°C).

Pneumatic-tired, steel-wheeled static and vibratory rollers may be used for intermediate rolling. When using pneumatic rollers, keeping the tires hot is the most effective means of preventing pickup. Applying a small amount of non-foaming detergent or water soluble oil on the wetting mat of a pneumatic-tired roller at the beginning of rolling operations helps prevent asphalt from sticking to the tires until they warm up.

Pneumatic-tired rollers have several advantages:

a. They provide a more uniform degree of compaction than steel-wheeled rollers;
b. They improve the seal near the surface, thus decreasing the permeability of the layer; and
c. They orient the aggregate particles for greatest stability, as high pressure truck tires do after using the asphalt surface for some time.

Tire contact pressures should be as high as possible without causing displacement of mix that cannot be remedied in the final rolling. Pneumatic-tired rolling should be continuous after breakdown rolling until all of the mix placed has been thoroughly compacted. At least three passes should be made. Turning of pneumatic-tired rollers on the paving mix should not be permitted unless it can be done without causing undue displacement.

Vibratory tandem rollers of proper static weight, vibration frequency and amplitude are used to provide required densities with fewer roller passes than static-weight tandem or pneumatic-tired rollers (or combinations of the two). As mentioned previously, the vibratory roller may be used in the vibratory mode, at any time (subject to Specification requirements) on all pavement layers during the breakdown and intermediate phases of rolling.

(C) <u>Finish Rolling</u>

Finish rolling is done primarily for the improvement of the surface. It should be accomplished with steel-wheeled, static-weight tandems or non-vibrating vibratory tandems while the material is still warm enough for removal of roller marks. Only enough passes should be made to remove the roller marks and smooth the mat. Finish roller operators should be cautioned about over rolling the mat since it can decrease the mix density. Vibratory rollers operated in the vibratory mode are not permitted as finish rollers.

<u>NOTE:</u> Some Superpave mixes may exhibit a "tender zone" or lateral movement during compaction when the mix has cooled to the 250° - 210°F range. Because of this possibility, it is very important to obtain as much density as possible during the breakdown rolling phase. The use of vibratory rollers, more passes, additional rollers, compacting at a hotter temperature, adjusting the mix, making certain that silicone has been added to the asphalt binder for surface mixes, excessive moisture in the aggregate, etc., are some things that may need to be considered. Some success has also been achieved by using rubber tired rollers during this "tender zone". If none of these solve the lateral movement problem, it may be necessary to hold back the intermediate and finish rollers until the mix has cooled below this "tender zone" temperature range and then continue rolling.

9.8.3 Roller Patterns

A rolling pattern that provides the most uniform coverage of the lane being paved should be used. Rollers vary in widths, and a single recommended pattern that applies to all rollers is impractical. For this reason, the best rolling pattern for each roller being used should be worked out and followed to obtain the most uniform compaction across the lane. For purposes of this and future discussion, the following definitions apply. A roller "pass" is defined as one trip of the roller in one direction over any one spot in the pavement. A “coverage” is defined as the sufficient number of passes to cover the entire laydown width of pavement.

The rolling pattern not only includes the number of passes, but also the location of the first pass, the sequence of succeeding passes, and the overlapping between passes. Breakdown rolling speed should not exceed about 3 mph (5 kph). In addition, sharp turns and quick starts or stops are to be avoided. For thin lifts, a recommended rolling pattern for static steel-tired rollers is shown in Figure 9-18. The rolling operation should start from the edge of the spread on the low side with the roller moving forward as close behind the paver as possible. The second movement of the roller should be to reverse in the same path until the roller has reached previously compacted material. At this point it should swing over and move forward along path number 3, again going as close as possible behind the paver. The fourth movement is reversal in the third path and a repetition of the previous operation. After the entire width of the mix being placed has been covered in this fashion, the roller should swing across the spread to the low side and repeat the process. With this pattern, the lap of the roller with succeeding passes need not be more than 3 to 4 inches (75 to 100mm).

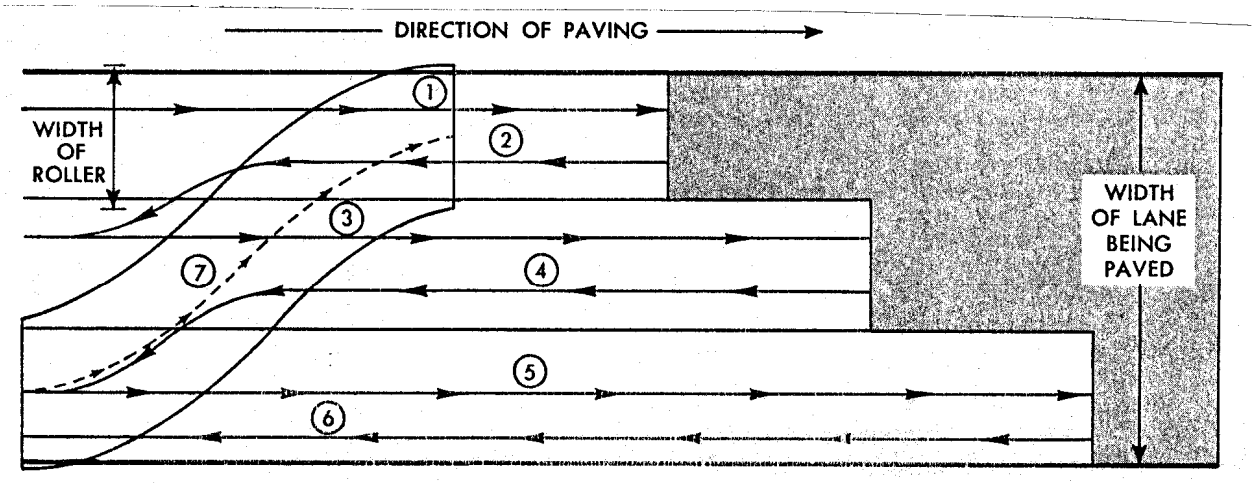

This is a recommended rolling pattern. Every pass of the roller should proceed straight into the compacted mix and return in the same path. After the required passes are completed, the roller should move to the outside of the pavement on cooled material and repeat the procedure.

Figure 9-18
Correct Rolling Pattern

For thick-lift construction, the rolling process should start 12 to 15 inches (300 to 400mm) from the lower unsupported edge until the center portion of the spread is compacted to some degree of stability. Succeeding passes of the roller should then gradually progress toward the edges of the spread. The uncompacted edge provides initial confinement during the first pass, thus minimizing lateral movement of the mix. After the central portion of the spread has been compacted, the mix will support the roller and allow the edge to be compacted without lateral movement.

With steel-wheeled rollers the operation should always progress with the drive wheel forward in the direction of paving. This is especially important in breakdown rolling. The greatest percentage of

compaction occurs during a breakdown pass. A main reason why breakdown rolling should be done with the drive wheel is that there is a more direct vertical load applied by this wheel than the tiller wheel. (Figure 9-19).

If the breakdown pass of the roller is made with the tiller wheel forward, the pushing force and the weight is slightly ahead of vertical, causing material to push up in front of the wheel. The greater weight of the drive wheel carries out the compaction while the turning force tends to tuck material under the front of the wheel.

There are exceptions to rolling with the drive wheel forward, however. They usually occur when superelevations are being constructed or if the grade on which the asphalt mix is being placed is excessive. The exceptions occur when, due to these high grades, the drive wheel of the roller begins to chatter on the mat, causing displacement of the mix and a very rough surface. In these cases the roller must be turned around to allow the tiller wheel to partially compact the material so that the drive wheel can then proceed over it.

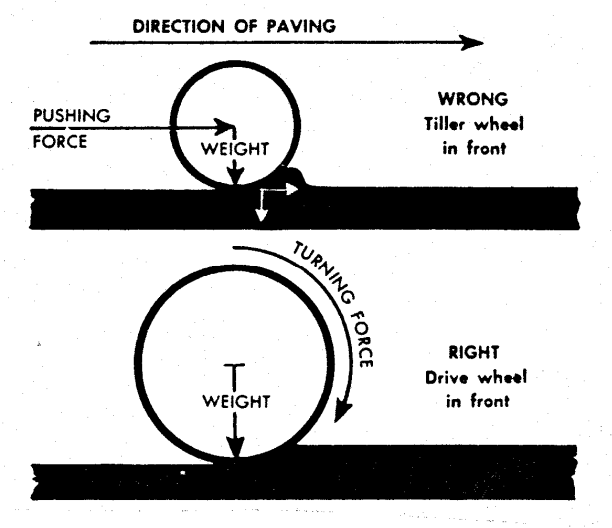

Figure 9-19:
Forces Acting When Tiller Wheel or Drive Wheel is Forward

9.9 CONSTRUCTING TRANSVERSE JOINTS

9.9.1 Transverse Joint Specifications

Article 610-11(A) of the Standard Specifications basically reads as follows:

When the placing of the mixture is to be suspended long enough to permit the mixture to become chilled, construct a transverse joint (See Table 9-2 of this Manual).

If traffic will not pass over the end of the paving, a butt joint will be permitted, provided proper compaction is achieved. If traffic will pass over the joint, construct a sloped wedge ahead of the end of the full depth pavement to provide for proper compaction and protection of the full depth pavement. Construct the joint square to the lane alignment and discard all excess material. Place a paper parting strip beneath this wedge to facilitate joint construction unless waived by the Engineer.

Before paving operations are resumed, remove the sloped wedge and cut back into the previously constructed pavement to the point of full pavement depth. Coat the exposed edge of the previously constructed pavement with tack coat.

When laying of the mixture is resumed at the joint, complete and then test the construction and smoothness of the joint in accordance with Article 610-12 while the mixture is still in a workable condition and can be corrected.

9.9.2 Construction Procedures

A transverse joint is constructed at any point where the paving operation is interrupted for a period of time (15 minutes or more) and the paving operation is to be resumed later. The type of transverse joint to be constructed depends primarily on whether traffic will be traveling over the mat before paving is resumed. A poorly constructed transverse joint is noticeable as a pronounced bump in the pavement. Consequently, the Technician must be on hand whenever a transverse joint is made in order to ensure it is done properly. Discovering hours after construction that a transverse joint is unsatisfactory does no good, because joint construction can only be corrected while the mix is still hot and workable. Once the mix cools, corrections can be made only by cutting out and replacing the joint.

Transverse joints are constructed in three steps: (1) ending the lane or width of pavement (with proper compaction and thickness) at the point of work stoppage, (2) resumption of paving operations at a subsequent time, and (3) rolling the transverse joint. These steps are described below.

Ending a Lane:

When ending a lane (for whatever reason) and paving is to be later resumed, the objective is to end with full depth pavement and to establish a vertical face on the mat such that when paving is resumed, full depth pavement can be placed, beginning at the joint. This can be accomplished by the use of either a butt joint or a paper tapered joint as required by the traffic situation. Ending a lane should generally be done in the following manner.

(1) When the paver is placing the last load, operate the paver in normal fashion as it approaches the location of the proposed joint.

(2) As the hopper begins to empty and the amount of material in the screed chamber decreases below normal operating level, the paver is stopped.

(3) The screed is raised and the paver moved out of the way.

(4) Excess asphalt hot-mix is then shoveled away from the end of the mat to form a straight, full thickness, clean, vertical edge at the selected location.

(5) If a butt joint is to be constructed, place runoff boards of sufficient thickness, length, and depth next to the joint to support the roller during compaction so as to result in a full depth mat with a vertical face. Complete compaction and remove boards as necessary.

(6) If a paper tapered joint is required, place treated release wrapping paper is placed along the edge as shown in Figure 9-20. Paper joints are required per Standard Specifications Article 610-11(A), unless waived by the Engineer. The material that was shoveled away in Step 4 is replaced and used to form a taper. The suggested minimum length to compacted thickness ratio of the taper is 12:1.

(7) Compact the mat to the required density.

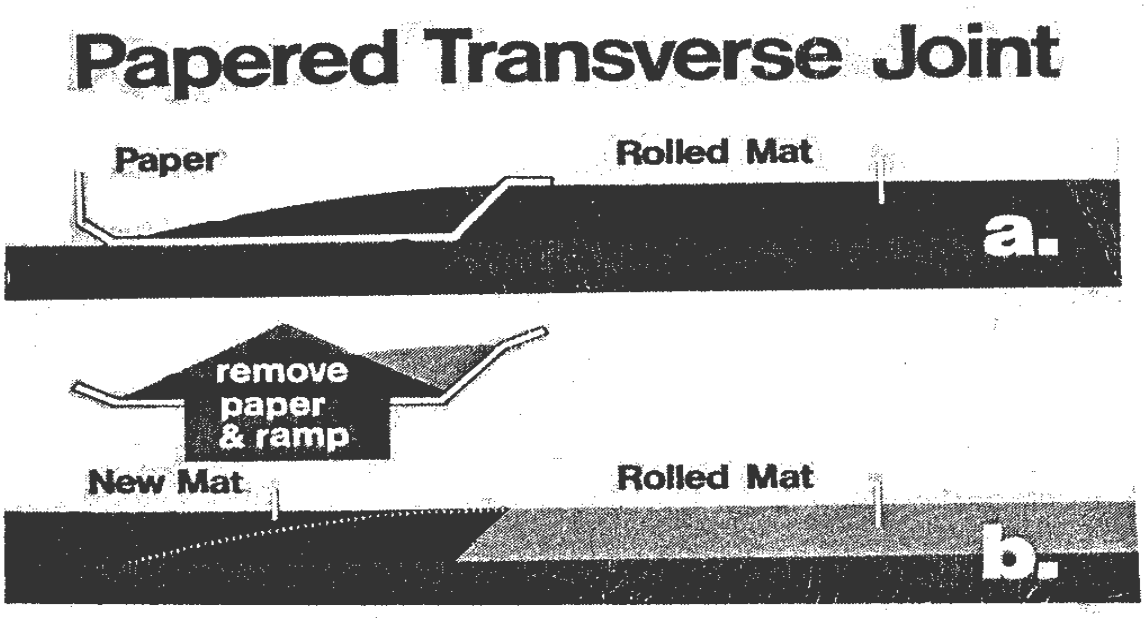

Figure 9-20
Paper Joint

<u>Resumption of Paving Operations</u>:

When construction is ready to be resumed, the following procedure is used to form a smooth and durable transverse joint.

(1) The taper material is removed and discarded or recycled along with the board or paper.

(2) A 10 ft. (3 meter) straightedge is used to check the longitudinal grade of the mat. Because the paver was running out of material as it laid the last few feet (meters) of mat, it is possible that those last few feet (meters) taper slightly (ramp down) from the specified level of the mat. If this is the case, a new transverse vertical edge must be cut at the point of <u>full pavement depth</u> behind the point where the ramping down begins. (See Standard Specs. Article 610-11(A).

(3) The vertical face and pavement surface of the mat is tack-coated.

(4) The paver is backed up to the edge of the mat and the screed rested on the mat surface.

(5) The screed is heated while it rests on the mat. This provides some heat to the material at the edge of the mat.

(6) The heated screed is raised and at least 3 shims or starting blocks as thick as the difference between the uncompacted and compacted mat are positioned under it. The starting blocks should extend the full length of the screed, front to back.

(7) Null the screed and set the proper angle of attack on both sides of the paver.

(8) The truck with the first load of hot-mix is backed carefully to the hopper. During discharge of the mix from the truck bed to the paver, it is essential that the truck not bump the paver, and cause it to move.

(9) Activate the material feed system and bring the head of material in the auger chamber up to the proper level (up to the auger shaft) across the entire width of the screed.

(10) Start the paver forward, pull the screed off the starting blocks, and bring the paver to the desired laydown speed as quickly as feasible. Adjust the angle of attack as necessary to provide the proper loose thickness of the asphalt mat.

(11) Once the paver has moved away, excess hot-mix is cleaned off the surface of the mat and the joint is checked with a straightedge to assure smoothness and that adequate loose material has been placed to allow for compaction.

Rolling and Compacting Transverse Joints:

Ideally, a transverse joint should be rolled transversely; however, because of maintaining traffic, site restrictions, safety, slopes, etc., most transverse joints are rolled in the longitudinal direction. This can be satisfactorily accomplished as long as the initial elevation of the new mix is sufficiently above that of the old mix on the cold side of the joint to allow for full compaction. Rolling and compaction should be accomplished as quickly as possible after the paver has moved off the joint and checked for smoothness and loose thickness relative to the elevation of the cold side of the joint. The roller should pass slowly and completely over the joint before the roller is reversed.

Once the joint has been compacted, it must be checked for smoothness. NCDOT specifications, Article 610-12, allow no more than 1/8 in (3.2mm) variation between any two contact points using a 10 ft (3 meter) straightedge. If the joint is satisfactory, no further work is necessary. If the straightedge shows an uneven joint, the surface of the new mat must be scarified while still warm and workable. Scarification is done, preferably with a tined lute. Excess material can then be removed or additional material added, and the joint rolled and rechecked.

9.10 CONSTRUCTING LONGITUDINAL JOINTS

9.10.1 Longitudinal Joint Specifications

Article 610-11(B) of the Standard Specifications basically reads as follows:

Tack the exposed edge of all longitudinal joints prior to placing the adjoining pavement.

Form longitudinal joints by allowing the paver to deposit the mixture adjacent to the joint to such depth that maximum compaction can be obtained along the joint. Pinch the joint by rolling immediately behind the paver.

When multi-lane multi-layer construction is required, offset the longitudinal joints in each layer from that in the layer immediately below by approximately 6 inches. Construct the joints in the final layer, where possible, between designated travel lanes of the final traffic pattern.

9.10.2 Location Of Longitudinal Joints

The location of longitudinal joints must be carefully planned to achieve durable joints. The width of spread is controlled in many instances by the location of the longitudinal joint. The Standard Specifications, as noted above, require that when a multi-lane multi-layer pavement is being constructed, the longitudinal joints in each layer must be offset from the joint in the layer immediately below by approximately 6 inches (150 mm) (See Fig. 9-22). Overlapping of successive courses rather than stacking the joint directly on top of the joint below helps to prevent cracking and separation along the longitudinal joint. The locations of joints must also be planned such that the joint in the final layer of pavement is located, where possible, between designated travel lanes of the final traffic pattern. This will assure that the joint is not located in the wheel path of a lane. Joints located in a wheel path have a detrimental effect on ride quality and are more susceptible to water intrusion under traffic during rain or snow.

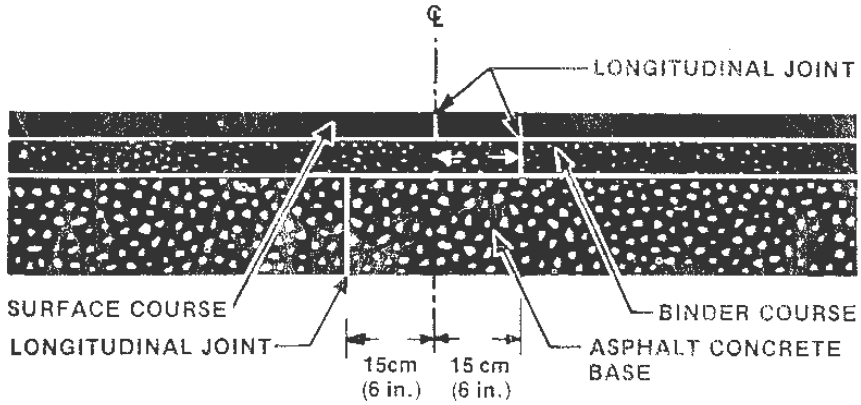

Figure 9-22
Overlapping of Successive Courses to Helps To Prevent A Crack From Opening Along a Longitudinal Joint

9.10.3 Construction Procedures: Construction of the First Lane

Two key factors that affect the long term durability of a longitudinal joint are built into the pavement during construction of the first lane. One is the importance of running the paver in a straight line so the joint can be matched on the next pass of the paver. The other is the need to properly compact the unconfined edge of the first lane. In laying the first lane, a stringline, curb, or other reference line must be used to guide the paver on the proper course. It is also important, for good results, that the thickness adjustment controls on the paver not be over-controlled. If an extendable screed is used, its width must be kept constant. Moving the extension in and out will create an uneven edge that will be very difficult to match.

To achieve proper density at the longitudinal joint, it is essential to compact the unconfined edge of the first lane correctly. The edge of the drum on a vibratory or steel wheel roller should extend out over the edge of the mix a minimum of 6 inches (150 mm) when the first lane is being compacted.

9.10.4 Construction Procedures: Construction of the Adjoining Lane

Tack the exposed edge of all longitudinal joints prior to placing the adjoining pavement.

Form the longitudinal joint by allowing the paver to deposit mixture adjacent to the joint to such depth that maximum compaction can be obtained along the joint. If the level of the new uncompacted mix is even with or below the level of the adjacent compacted mix, steel wheel compaction equipment will not be able to properly densify the mix along the joint. Whether the first pass of the roller is primarily on the hot side of the joint or primarily on the cold side, the roller will bridge the mix at the joint leaving it essentially uncompacted or only partially compacted. Therefore, it is imperative that the level of the uncompacted mix at the longitudinal joint be above that of the compacted mix by approximately 1/4" for each 1" of compacted pavement. The longitudinal joint should be rolled immediately behind the paving operation.

When placing the adjoining lane, it is important that the adjoining lane be placed so that the mix uniformly overlaps the first lane by 1 to1.5 in. (25 to 38 mm) (Fig. 9-23a). The thickness of the overlap should be about one-fourth the desired compacted thickness. This is the preferred method of longitudinal joint construction. If the longitudinal edge of the first lane is straight and the correct amount of overlap is used, the amount of raking will be minimal. If the overlapped material is slightly excessive, the excess overlapping material may be bumped or crowded back onto the hot lane so that the roller can crowd the small excess into the hot side of the joint (Fig. 9-23b). When the overlap is excessive, the excess material should be trimmed off so that the bumped ridge of material along the joint is uniform. In no case should the raker broadcast the excess mix across the width of the new lane.

A trimmed joint is sometimes used (Fig. 9-23c). This joint is constructed by removing all freshly placed material that has overlapped the rolled lane. This is best done by trimming the joint immediately behind the paver with a square-ended shovel. Again, in no case should the mix be broadcast across the width of the new lane.

If the lanes are placed simultaneously with two pavers moving in echelon, the loose depths of the mats should match exactly, with no overlap for a hot joint. The joints of a freshly paved mat are usually compacted before the rest of the paved width.

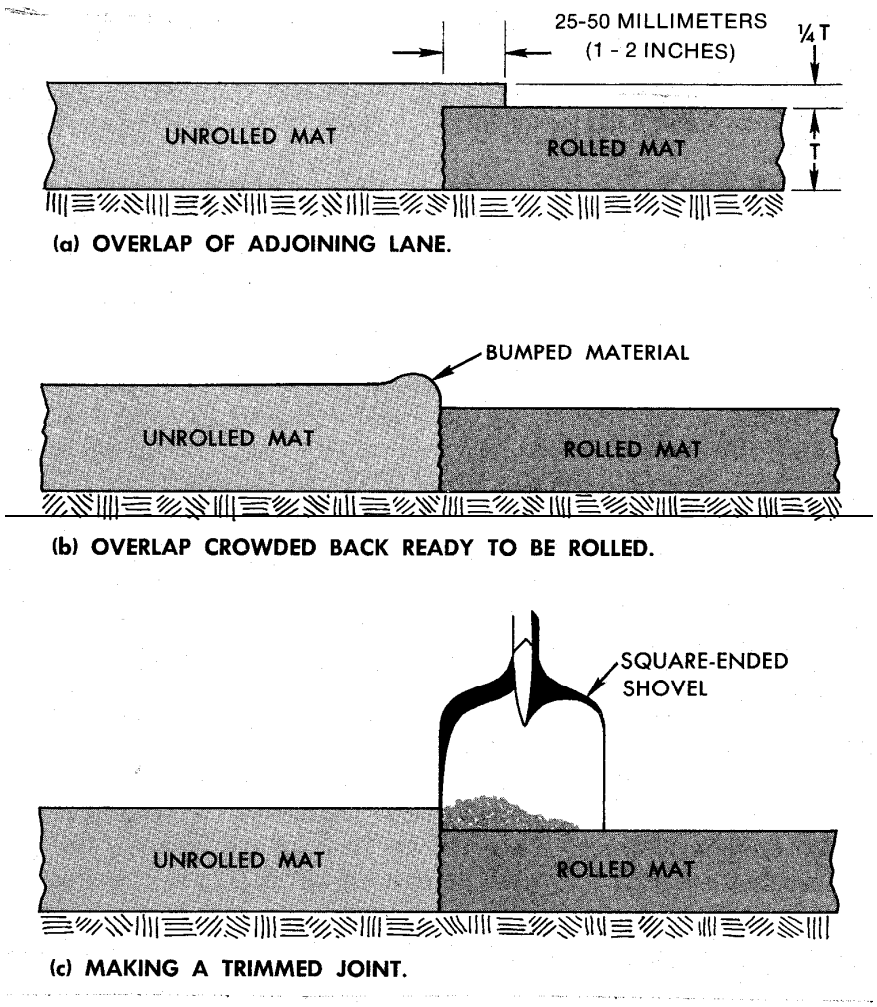

Figure 9-23
Constructing and Preparing Longitudinal Joints

9.10.5 <u>Construction Procedures: Rolling and Compaction of Longitudinal Joints</u>:

Longitudinal joints should be rolled directly behind the paving operation. The most efficient and recommended way to compact a longitudinal joint is to place the roller on the hot (new) mat so that approximately 6 in (150mm) rides on the cold (existing) adjoining lane (Fig. 9-24 and Fig. 9-25). The roller is operated here to pinch and press the fines into place and provide adequate compaction to the joint and the hot mat adjoining the joint.

In the past it was common practice to do the initial rolling of the longitudinal joint from the cold side of the joint, frequently referred to as “pinching the joint”. On the first pass, only about 6 in. of the width of the roller rides over the fresh mat, compressing the mix at the joint. The majority of the compactive force is

wasted because the roller is essentially applying its compactive force to an already compacted mat. In the meantime, the rest of the mat is cooling, possible causing density to be more difficult to achieve.

Regardless of the rolling method or equipment used, the level of the uncompacted mix at the longitudinal joint must be above that of the previously compacted mix by an amount equal to approximately 1/4 in. for each 1 in. (6 mm for each 25 mm) of compacted pavement if proper compaction of the mix at the joint is to be accomplished. If it is not, the compaction equipment will bridge the mix at the joint, leaving it essentially uncompacted or only partially compacted.

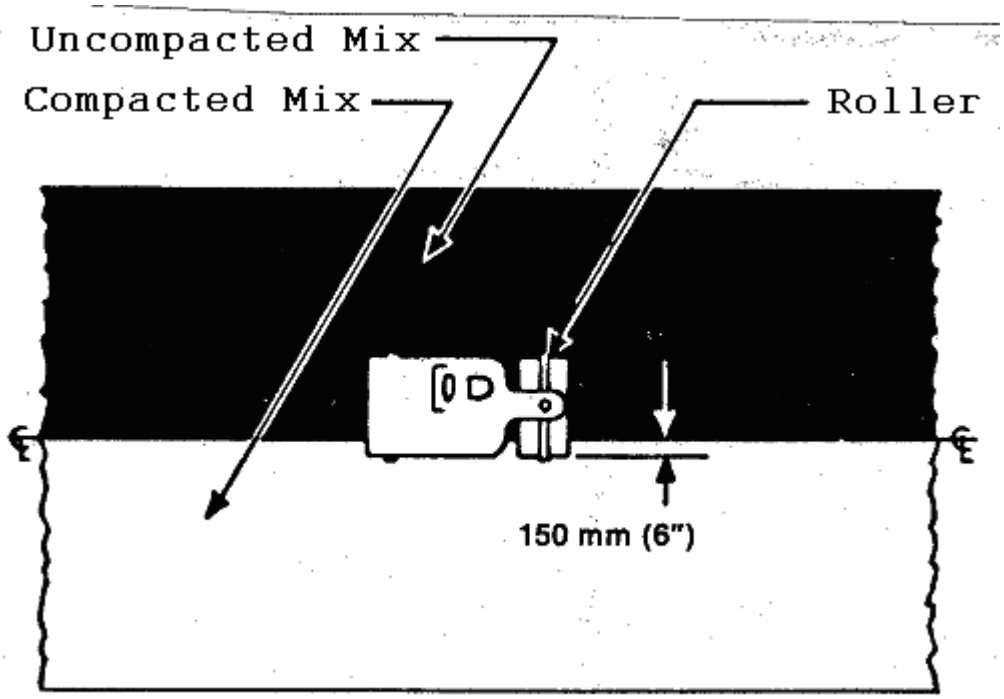

Figure 9-24:
Rolling a Longitudinal Joint

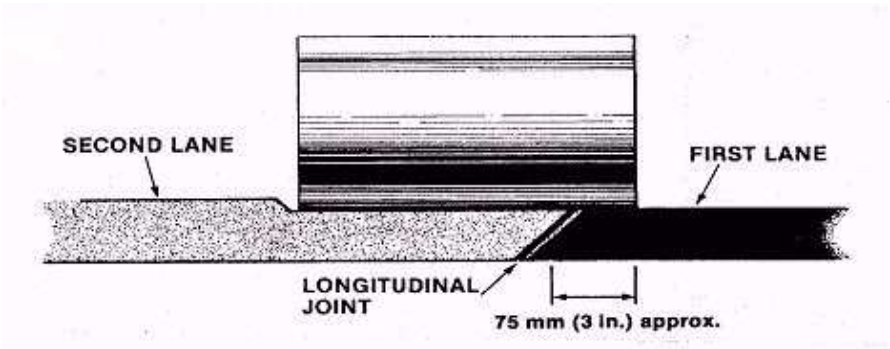

Figure 9-25:
Joint Rolling Procedure

9.11 SIGNIFICENT DECIMALS FOR ROADWAY CALCULATIONS

The following rule of "rounding off" shall be used in all calculations. When the digit to be dropped (one digit beyond significant digit) is 0, 1, 2, 3 and 4, the preceding digit will not change. When the digit to be dropped (one digit beyond significant digit) is 5, 6, 7, 8 and 9, the preceding digit will be increased by one. **NOTE: Do not round one digit beyond the significant decimal**

Example: Significant decimal of 0.1
91.74 will be 91.7 (Drop the 4 and leave the 7 as is)
91.75 will be 91.8 (Drop the 5, and round up the 7 to a 8)

NOTE: Each internal calculation used to arrive at a final combined result shall be calculated to at least one decimal place farther than the specified significant decimal.

Significant Decimals

Specific Gravities (All)…….. 0.001
Prime Coat Rate……0.01 gal/yd^2
Tack Coat Rate…….. 0.01 gal/yd^2
Rate of Mix Spread…… 1 lbs/yd^2
Tons of Mix……..1 Ton
% Compaction (Density)……0.1%
Random Density Sample Locations… 1 L.F. (Length and Width)
Nuclear Target Density……..…0.1 lbs./ft^3

SECTION 10

ROADWAY INSPECTION AND TESTING OF ASPHALT PAVEMENTS

10.1 INTRODUCTION - ROADWAY INSPECTION

10.1.1 Inspection - General

Prior to beginning paving operations, the Resident Engineer and/or the DOT Roadway Technician must inspect the Contractor's equipment to assure that it meets all requirements of the Specifications and is in good working order. If the equipment meets Specifications and is in satisfactory operating condition, a statement shall be entered in the Technician's Daily Diary. If the equipment does not meet the Specifications, the Contractor should be advised accordingly and corrective actions taken before paving begins. The Technician should note in his daily diary on the first day of operation, and thereafter as needed, that this check has been made and that all equipment is in compliance with specifications, or if not, what measures are being taken to correct the deficiencies.

After paving begins on a contract, the DOT Roadway Technician is responsible to insure the Contractor is utilizing good construction practices in order to generate a satisfactory asphalt pavement. Article 105-10 authorizes the technician to inspect all or any part of the work. If the Roadway Technician finds the Contractor is not utilizing best paving practices, he/she should notify the Contractor's paving foreman and the Resident Engineer. The Technician is not authorized to alter or waive the requirements of the contract or to act as foreman for the Contractor; however, he/she does have the authority to reject work or materials until a final decision is made by the Engineer.

10.1.2 QC/QA Technicians Checklist for Roadway Operations

Prior to beginning production and placement of asphalt mixtures, the following checklist should be reviewed by project technicians, including both Contractor and Department Technicians. The checklist is taken from the Department's Construction Manual and includes items related to preliminary planning, equipment specifications and requirements, preparation of the existing pavement or base, spreading, compaction, traffic control, sampling and testing and required reports.

1. GENERAL

(a) Have the Engineer and Inspectors held a preliminary paving conference with the appropriate Contractor personnel and other involved parties?(See Section 9.4.2)

(b) Has the continuity of operations been planned?

(c) Has the number and type of rollers to be used been determined?

(d) Has the width of spread and location of longitudinal joints been planned to coincide with lane markings, where possible and feasible?

(e) Is it understood who is to issue and receive instructions?

(f) Has placement of control strips and coring of density samples been coordinated?

(g) Has method of handling traffic been established?

(h) Is a Materials Transfer Vehicle required?

2. PAVER

(a) Does the paver comply with Specifications?
(b) Is the governor on the engine operating properly?
(c) Are the slat feeders, the hopper gates, and spreader screws in good condition and adjustment?
(d) Are the crawlers (power tracks) in good condition and adjusted properly?
(e) If the paver has pneumatic tires do they contain correct and uniform air pressure in accordance with manufacturer's Specifications?
(f) Is the screed heater working properly?
(g) Are the reverse auger paddles in good condition?
(h) Are auger extensions needed and installed?
(i) Are the paver strike off plates in place and correctly adjusted?
(j) Are the surfaces of the screed plates true and in good condition?
(k) Are screed cutoffs and/or extensions in accordance with specifications and properly adjusted?
(l) Are mat thickness and crown controls in good condition and adjustment?
(m) Are screed vibrators in good condition and adjustment and being used on all pavement courses?
(n) Are the automatic screed controls operating properly, when required?
(o) Is the mobile string line for the automatic grade controls of adequate length and operating properly, when required?

3. ROLLERS

(a) Does the type, number and weight of rollers comply with Specifications?
(b) Can each roller start, stop and reverse smoothly?
(c) Are all steel wheels straight across and free from grooves or pits?
(d) Are wheel bearings free from excessive wear?
(e) Are scrapers and wetting pads in good condition?
(f) Is the sprinkler system on each roller in good operating condition?

4. HAULING EQUIPMENT

(a) Are truck beds smooth and free from holes and depressions?
(b) Is there any leakage of gas or oil from trucks?
(c) Are trucks equipped with adequate covers?
(d) Do trucks and paver operate together without interference?
(e) Is the method of coating of contact surfaces of truck beds agreed upon?
(f) Are truck bodies being drained of excess release agent before being loaded?
(g) Is there a hole provided for temperature check?

5. ASPHALT DISTRIBUTOR

(a) Are the heaters and the pump in good working condition?
(b) Does the distributor have a volume calibration chart certified by a private testing laboratory?
(c) Are spray bar nozzles unclogged & set at proper angle for application of tack coat?
(d) Is an adequate thermometer provided?
(e) Is a hand held spray hose with nozzle provided to tack irregular areas?

6. MISCELLANEOUS TOOLS REQUIRED

(a) Rakes, Shovels, Lutes, Etc.
(b) Tool heating torch
(c) Cleaning equipment
(d) Hand tampers
(e) Small mechanical vibrating compactors, when considerable areas require tamping
(f) Blocks and shims for supporting the screed of the paver when beginning operations
(g) Paper or timbers for construction of transverse joints at ends of runs
(h) Joint cutting and painting (tacking) tools
(i) Thin Lift Nuclear Density Gauge or Non-Nuclear Density Gauge (if density gauge control used)
(j) 10 foot straightedge on hand for checking joints and other locations (See Section 610-12 of the Standard Specifications)
(k) 4 foot level for checking pavement crown or cross-slope
(l) Infrared Thermometer
(m) 6" Core Drill Bit – must be 6" (150mm) <u>inside diameter</u>
(n) Depth Checking Device
(o) Hearne Straightedge (when required by contract)
(p) Inertial Profiler (when required by contract)

7. PREPARATION OF EXISTING PAVEMENT FOR OVERLAY

(a) Has patching of all pot holes and other necessary patches been made?
(b) Has all grass, dirt debris, etc. been properly removed from the pavement?
(c) Have all vertical faces, which will come into contact with the asphalt mix, been cleaned and tacked with asphalt?
(d) Has a uniform tack coat of correct quantity been applied?
(e) Has stringline been placed for proper alignment?

8. PREPARATION OF BASE COURSES BEFORE APPLICATION OF ASPHALT PLANT MIX

(a) Have all underlying base courses and/or subgrade been compacted to the required density?
(b) Has base course been primed when required?
(c) Has prime cured sufficiently and has excess prime been blotted to avoid pickup?
(d) Has base been broomed to remove loose material if necessary?
(e) Has stringline been placed for proper horizontal alignment of the pavement?

9. SPREADING

(a) Is the mix of uniform texture?
(b) Is the temperature of the mix uniform and according to requirements of Specifications and job mix formula?
(c) Is the depth and rate in conformance with contract?
(d) Is the alignment and cross-section according to typical section?
(e) Are longitudinal and transverse joints being properly constructed and checked?
(f) Is paver speed coordinated with plant production rate?

10. COMPACTION

(a) Are the required number of rollers being used?
(b) Are the rollers operating at the proper speed?
(c) Is the proper rolling pattern being uniformly followed?
(d) Is the mat being rolled at the proper temperature?
(e) Are the joints and edges being rolled properly and checked?
(f) Are transverse joints being properly constructed when necessary?
(g) Is the required density being achieved?

11. HANDLING OF TRAFFIC

(a) Is traffic being handled properly through project?
(See Project Special Provisions, Standard Specifications, and Roadway Standards.)
(b) Are the signs of sufficient type and number?
(c) Are there proper amount of flagmen to handle traffic where necessary?
(d) Is Contractor's equipment being operated in a safe manner through project?

10.1.3 Required Information for Asphalt Weight Certificates

Upon delivery of asphalt to the roadway, the Contractor should immediately give the weight certificate to the DOT roadway technician performing the inspection. Upon receipt of the certificate, the roadway technician should make sure the ticket is legible and the following information required by Article 106-7 has been listed on the ticket correctly by the certified weighmaster at the plant:

1. The Department Contract Number/ WBS Number.
2. The date the ticket is issued.
3. The time the ticket is issued.
4. The type of material represented by the ticket.
5. The gross weight of the vehicle.
6. The tare weight of the vehicle.
7. The net weight of the material.
8. The appropriate Job Mix Formula # (JMF) for the asphalt plant mix.
9. The asphalt plant certification number where the material was produced.
10. The truck number transporting the material.
11. The name of the Contractor.
12. The stamp or number of the public weighmaster weighing the material.
    *Computer generated weightmaster's name & number is acceptable on haul tickets.
13. The signature or initials of the public weighmaster in ink.

After verifying that the above information has been furnished on the weigh ticket, the DOT roadway technician should then list the following information on the ticket:

1. Contract / WBS Number if different than that shown on the ticket.
2. Contract line item number by which the material will be paid.
3. Beginning station location where the material is being placed.
4. Lane or shoulder description where the material is being placed.
5. Time the material was placed.
6. The temperature of the mix when it is received.
7. Construction Technician's signature on first ticket for day and initials on subsequent tickets.
8. Quantity reduction for unused portion of material and reason for deduction.

10.1.4 Visual Inspection of the Mix (Plant and Roadway)

Close cooperation between the paving crew and the asphalt plant is essential in producing a high quality pavement on the roadway. A fast means of communication must be established between the paving operation and the asphalt plant so that any change in the mixture production process or the roadway operation can be made promptly. When possible, the roadway technician and the plant technician should frequently exchange visits. When the roadway technician is familiar with plant operations, he can easily determine if changes at the plant are necessary to improve the mix. The plant technician, on the other hand, by being familiar with the paving operation can better understand related roadway problems which might occur due to changes at the plant.

Every truckload of material should be observed as it arrives. Mistakes in batching, mixing, and temperature control can and do occur, and these errors may sometimes go unnoticed by the plant technician. Consequently, loads arriving at the spreader may be unsatisfactory, in which case, they should be rejected by either the Contractor or DOT technician. When the roadway technician rejects a load, he should record his action, with the reason for rejection, both on the ticket and in his diary so that the proper deduction can be made from the pay quantities. If appropriate, a sample should be obtained for laboratory analysis. A record should also be kept of the loads accepted and placed. These records should be checked daily, or more frequently, with those of the plant technician so that discrepancies do not exist when work is completed.

Although the mix is inspected at the plant, there are times when the plant technician may inadvertently overlook a defective load resulting from a plant malfunction. Some of these deficiencies can be readily noticed by a knowledgeable and alert roadway technician prior to or immediately after dumping. When the temperature is checked or the truck bed is raised, these deficiencies are usually readily apparent based on visual observation and knowledge of asphalt pavements. Some indications of hot-mix deficiencies that may require close inspection and possible corrective action are:

(1) Blue Smoke: Blue smoke rising from the mix in the truck or the spreader hopper may indicate an overheated batch. The temperature should be checked immediately.

(2) Stiff Appearance: Generally, a load that appears stiff or has peaked up in the truck body may be too cool to meet specifications. The temperature should be checked. If it is below the optimum placing temperature, but within the acceptable temperature range, immediate steps should be taken to correct the low temperature and decrease the possibility of having to waste loads of mix.

(3) Mix Slumped in Truck: Normally the material in the truck is in the shape of a dome. If a load lies flat or nearly flat, it may contain too much asphalt or excessive moisture. Close inspection should be made at once. Excess asphalt also may be detected under the screed as excessive shininess on the mat surface. A mix containing a large amount of coarse aggregate might be mistaken for an over-asphalted mix because of its shiny appearance. Such a mix, however, usually will not slump in the haul truck.

(4) Lean, Dull Appearance: A mix that contains too little asphalt can generally be detected immediately in the truck or in the spreader hopper by its lean (dry), granular appearance; improper coating of the aggregate, and lack of typical shiny black luster. Lack of sufficient asphalt in the mix can be detected on the road by its lean, brown, dull appearance on the surface and unsatisfactory compaction under the roller. Excess fine aggregate can cause a mix to have the same look as a mix with too little asphalt. Excess fines can be detected by inspecting the mix texture and by watching for shifting of the mix under the roller.

(5) Rising Steam: Excess moisture in the mix often appears as steam rising when it is dumped into the hopper of the paver. The hot-mix mat behind the paver may be bubbling and popping as if it were boiling. Excessive moisture causes the binder to expand, which in turn, may also cause the mix to appear and act as though it contains excessive asphalt.

(6) Segregation: Segregation of the aggregates in the mix may occur during paving because of improper handling or it may have happened at some point prior to the mix reaching the paver. In any case, corrective action should be taken immediately. There are many possible causes of segregation. The cause of the segregation should be corrected at its source. (See the Segregation Diagnostic Chart in the Appendix and "**SEGREGATION OF MIXES ON THE ROADWAY**" in this section of the manual for possible solutions).

(7) Contamination: Mixes can become contaminated by a number of foreign substances, including spilled gasoline, kerosene, oil, rags, paper, trash and dirt. The contamination can be removed if it is not too extensive; however, a load that has been thoroughly contaminated should be rejected.

Diesel fuel is NOT an approved Truck Release Agent and should NEVER be used. Excess diesel fuel that collects in the truck bottom can be absorbed by the mix. Diesel fuel damages the asphalt and causes it to ooze (bleed) to the surface, resulting in what is termed a "fat spot". Also, the excess diesel fuel may leach the asphalt from the hot-mix with which it comes into contact. Hot-mix contaminated with diesel fuel should be removed and replaced. Only non-petroleum/non-citrus based agents are allowed for spraying truck beds. The approved list of release agents is available through the Asphalt Laboratory.

10.1.5 Identifying Mat Problems, Causes and Cures

Roadway Technicians, including both Contractor and Department personnel, must be able to quickly identify problems in the finished pavement and determine possible causes and cures of problems. Problems such as:

Excessive Tearing
Segregation
Poor Ride Quality
Poor Joint Construction
Equipment Malfunctions
Or any deficiencies resulting from obvious poor workmanship

A table of these and other common pavement problems and their probable causes titled **"MAT TROUBLE SHOOTING GUIDE"** can be found in the Appendix of this manual. In referring to the table, keep in mind that a given deficiency may have several possible causes. Sampling and testing is not the only means for analyzing a pavement problem. Problems can still occur on the Roadway even though asphalt test results are within NCDOT specifications. Contractor shall be placed on limited production as outlined in Section 10.3 of QMS Manual for any mix that is obviously unacceptable. Any questionable mix shall be evaluated under Article 105-3 of the Specifications.

10.1.6 Determination of Rate of Spread and Tonnage Required

NCDOT project plans and specifications normally specify that asphalt mixtures be placed at a certain rate in pounds per square yard (kilograms per square meter); therefore, the rate of spread must be regularly checked by the Technician to determine that the specified amount is being placed. The running rate of spread may be obtained at intervals by using the running total pounds (kilograms) divided by the square yards (square meters) upon which the material was placed. At the end of each day's operation, the Technician must also compute the actual rate of spread from his record of the loads accepted and used in the work and record this on his daily report. The rate of spread on mainline paving should be calculated and reported with separate calculations made for areas of extra thickness, irregular areas, intersections, etc. An example of a rate of spread calculation is shown below.

EXAMPLE CALCULATION OF RATE OF SPREAD

585.000 tons (480.000 metric tons) of Type S 9.5B asphalt mix have been used to pave a mat 12 feet (3.6 meters) wide from Sta. 10+50 to 63+30 (3+20 to 19+30) at approximately 1.5 inches (40 mm) in depth. What is the rate of spread in lbs. per square yard (kilograms per square meter)?

English Units

$$\text{Rate of Spread} = \frac{\text{No. Lbs. Used}}{\text{No. Sq. Yds. Paved}} = \frac{\text{Tons (2000)}}{\frac{L \times W}{9}} = \frac{\text{Lbs.}}{\text{Sq. Yd.}}$$

For Rectangular Area:

Length = Ending Sta. - Beginning Sta. = 63+30 - 10+50 = 5,280 L.F.

$$\text{Rate of Spread} = \frac{\text{No. Tons} \times 2000 \text{ lbs / ton}}{\left(\frac{\text{Length (ft.)} \times \text{Width (ft.)}}{9 \text{ sq. ft. / sq. yd.}}\right)} = \frac{585 \text{ Tons} \times 2000 \text{ lbs / ton}}{\left(\frac{5{,}280 \text{ (ft.)} \times 12 \text{ (ft.)}}{9 \text{ sq. ft. / sq. yd.}}\right)} = 166.2 \text{ lbs. / sq. yd.}$$

Say 166 lbs./sq. yd.

Metric Units

$$\text{Rate of Spread} = \frac{\text{No. Kilograms Used}}{\text{No. Sq. Meters Paved}} = \frac{\text{Kg.}}{\text{Sq. Meters}}$$

For Rectangular Area:

Length = Ending Sta. - Beginning Sta. = 19+30 - 3+20 = 1610 m

$$\text{Rate of Spread} = \frac{\text{No. MetricTons} \times 1000 \text{ kg / mton}}{\text{Length (meters)} \times \text{Width (meters)}} = \frac{480 \text{ mtons} \times 1000 \text{ Kg / mtn}}{1610 \text{ m} \times 3.6 \text{ m}} = 82.8 \text{ kg / sq. meter}$$

Say 83 kg /sq. meter

NOTE: Significant Decimal for Rate of Spread is 1 lbs/sy

For Typical Rates of Spread, See Page 3-5 of this Manual

EXAMPLE CALCULATION OF TONS OF MIX REQUIRED

Quite frequently, the reverse of this calculation must be made when it is desired to know the number of tons (metric tons) of mix required to cover a given area at a specified rate of spread. For example, if the Contractor needed to know the number of tons (metric tons) of material he would need to order from the plant to cover a section of roadway 12 feet (3.6 meters) in width, from Sta. 0+00 to 28+00 (0+00 to 8+53) with Type I 19.0C mix at a specified rate of 285 lbs. per sq. yd. (160 kg per sq. meter), at approximately 2.5 inches (65 mm) in depth, how would he make this determination? The calculation is shown below.

<u>English Units</u>

Tons Required = Number of Square Yards to be paved x Rate of Spread

$$= \frac{\text{Length (ft.)} \times \text{Width (ft.)}}{9} \times \frac{\text{Rate of Spread}}{2000}$$

$$= \frac{2{,}800 \text{ ft.} \times 12 \text{ ft.}}{9 \text{ sq. ft. / sq. yd.}} \times \frac{285 \text{ lbs. / sq. yd.}}{2000 \text{ lbs / ton}} = 532 \text{ tons}$$

<u>Metric Units</u>

Metric Tons Required = Number of Square Meters to be paved x Rate of Spread

$$= \text{Length (meters)} \times \text{Width (meters)} \quad \frac{\text{Rate of Spread (Kg / M}^2\text{)}}{1000}$$

$$= 853 \text{ meters} \times 3.6 \text{ meters} \quad \frac{160 \text{ Kg / M}^2 \text{ / per sq. meter}}{1000 \text{ kg / mtn}} = 491.3 \text{ (Say 491 mtn)}$$

NOTE: Significant Decimal for Tons Required is nearest 1 ton

Also note that the depth is not used in the rate of spread or tonnage required calculations using the above methods.

In addition, the <u>actual</u> width of spread being placed or to be placed must be used in field rate of spread or tonnage required calculations. The width used may vary from the typical section surface width due to: (1) lane width variations due to offsetting longitudinal joints; and (2) lower layers are wider than plan typical widths (dimensions) due to slope (normally 1 : 1)

10.1.7 Temperature of the Mix at Roadway

Mix temperature during laydown and compaction of the mat is critical if smoothness, texture and density are to be achieved. It is extremely important that the temperature be at the proper level and that it be uniform throughout the mix to achieve either and/or both of these objectives.

Trucks should be checked for the temperature requirements by measuring the temperature with a thermometer in the 3/8" – 5/8" hole in the side of the truck bed prior to dumping mix into the paver. When checked in the truck at the roadway, mix temperature must be within +15℉ and -25℉ (+8℃ and -14℃) of the temperature specified on the JMF. If any check of the mix temperature is outside of the above range, **a minimum of 3 additional readings should be made in different points of the load. The 4 readings are then averaged and the average used as the temperature of that load**.

The mixing temperature at the asphalt plant will be established on the job mix formula. This temperature will be different for Warm Mix Asphalt (WMA) or various different mix types, depending on the grade of asphalt binder required for that mix type. The normal mixing temperatures for HMA & WMA Superpave mixes are as follows, unless or otherwise requested by the Contractor and approved by the Engineer:

TABLE 610-1
MIXING TEMPERATURE AT THE ASPHALT PLANT

Binder Grade	JMF Temperature (HMA)	JMF Temperature (WMA)
PG 64-22	300°F	225°F - 275°F
PG 70-22	315°F	250°F - 290°F
PG 76-22	335°F	260°F - 310°F

Note: Mixing and Compaction temperatures are based on the specified PG binder grade for each mix type in Table 610-3. When using RAP or RAS with a different binder than specified, use mixing and compaction temperatures based on the original binder grade for that mix type shown in Table 610-3.

In addition, mix temperature should be checked occasionally behind the paver or roller to determine if excessive heat loss has occurred. Mix temperature should also be checked whenever the mix appears to be cold or when the breakdown roller is falling behind. Mix compaction is most easily achieved and should be completed prior to mat temperature dropping below a temperature where the mix is still workable.

Mat temperature can be taken by inserting the stem of a dial thermometer into the uncompacted mat to the mid-point of the mat's thickness and compacting the mat against the stem by lightly tamping the mat surface, or by use of an infra-red thermometer.

Asphalt mixtures cool very quickly when placed in windy conditions or on cold surfaces in cold weather. Also, thin lifts cool more rapidly than thick lifts. If paving must be done in cold weather, then there is an obvious advantage in placing the mix in thick lifts to gain additional time for the compaction process. (See Cessation Requirements, Table 9-2)

10.1.8 Segregation of Mixes on the Roadway

Segregation can occur in asphalt hot mixes in two forms, either aggregate segregation or temperature segregation. Both must be avoided if a high quality, dense, smooth, uniform surface texture mat is to be constructed. Take necessary precautions during production, loading of trucks, transportation,

truck exchanges with paver, folding of the paver hopper wings, and conveying material in front of the screed to prevent segregation of the asphalt mixtures.

Aggregate segregation refers to a condition in hot-mix asphalt in which there is non-uniform distribution of the various aggregate sizes across the mat to the point where the mix no longer conforms with the specified job mix formula in gradation, asphalt content and mix properties. When segregation is present in a mixture, there is a concentration of coarse materials in some areas of the paved mat, while other areas contain a concentration of finer materials. The resulting pavement exhibits poor structural, textural, permeability, and smoothness characteristics, provides poor performance and durability, and has a shorter life expectancy and higher maintenance costs.

Temperature segregation refers to a condition in which the mix varies significantly in temperature across the mat to the point where some areas of the mat no longer comply with the temperature specification. When this happens, it detrimentally affects the smoothness and compaction of the mat. The cold areas will not compact properly, leading to areas with high in-place voids and overall pavement roughness. These high void areas will be more permeable and therefore, more subject to water infiltration and significant loss of pavement life.

Problems associated with segregation of either type are serious. Segregation is one of the major causes of poor performance and roughness of pavements. Some of the causes, and therefore the cure, of both types of segregation are the same. Some are caused by poor production and paving practices. In any event, elimination is essential to the construction of high quality, smooth pavements. Elimination or minimization of segregation is the responsibility of everyone who is involved in the production and placement of HMA, including those who design the pavements and the mix, Department personnel, Contractor personnel, aggregate producers and suppliers, those who haul the mixes, and manufacturers who design and market asphalt mixing and paving equipment.

Segregation of either type can directly affect pavement durability by increasing the air void content of the mix in the segregated areas and increasing the potential for moisture damage. Further, the segregated locations are susceptible to raveling and, if bad enough, total disintegration under traffic. Segregation, in the form of coarse aggregate pockets, longitudinal streak segregation, side-to-side segregation, or end of load (truck exchange) segregation is detrimental to the long-term performance of the asphalt mixture. In addition, pavement roughness is almost always associated with either type segregation.

Coarse graded mixes, such as base & intermediate mixes, are naturally more prone to aggregate segregation due to their high coarse aggregate content, low binder content, and possibly due to gap-grading. Finer graded surface mixes do not tend to have as severe segregation problems for the opposite reasons of those noted with coarse graded mixes; however, they can and do frequently occur, especially in the area where the truck exchange occurs and poor paving practices are being utilized.

Aggregate segregation can originate at virtually any point in the process of hot-mix asphalt production and placement. It can get its start in the mix design, in the aggregate stockpile, in the cold-feed bin, in the batch plant hot bin, in the drum mixer, in the drag-slat conveyor, or in the surge-storage bin. In some cases, segregation doesn't start until the truck is being loaded out; or even until the mix reaches the paver. The earlier in the hot mix process that segregation begins, the worse the problem tends to be due to more movement of the mix in completing the process. Whenever segregation does occur, all of these areas should be closely monitored for their extent of contribution to the problem. The paving operation should be placed on limited production status until the problem is resolved. See the **"SEGREGATION DIAGNOSTIC CHART" and "MAT TROUBLE SHOOTING GUIDE"** in the Appendix of this manual.

The solution to segregation problems usually lies within several of these problem areas. Modifications in the mix design may be needed; improper handling of the aggregates may need to be

addressed; modifications to the plant, drag-slat conveyor, and/or the surge-storage bin may be necessary; and the handling and movement of the mix through the surge-storage bin, into the truck, and on into the paver, may need to be altered. It's most important to remember that for whatever the reason and at whatever the location segregation begins, after it does, any unrestricted movement, especially down slope movement, will compound the problem drastically. Because of this, down slope movement of the mix should be kept to a minimum throughout the hot-mix asphalt process.

Two common mistakes often occur which greatly increases the likelihood of segregation of the mix on the roadway. The emptying of the paver hopper and/or the dumping of the paver hopper wings between truckloads of mix promotes both aggregate and temperature segregation. In fact, in most cases it causes segregation to be more likely to occur or to be worse. It is best to always maintain an adequate quantity of mix in the paver hopper, even between truckloads. Segregation problems are also substantially compounded if the paver hopper wings are dumped when the paver hopper is empty. This is because the material on the wings will most likely be the coarser stone from the mix.

10.1.9 Checking the Mat Cross-Slope and Thickness

Some form of slope gauge is required to check mat cross-slope. There are several methods of improvising slope checking devices. Boards cut with taper equal to a specific percent of slope, used with a level, will serve the purpose.

The fact that a level is usually required with any cross-slope testing method suggests adapting a level for slope checking. An inexpensive 4-foot mason's level is adequate in length, and its length lends it well to providing adjustment for each one percent of slope. One percent of slope is equal to 1/8 inch of rise per foot (10mm per meter). This equals 1/2 in. total rise in the length of the 4 ft. level to be equivalent to one % slope.

A threaded rod with a one inch diameter disc welded to one end, inserted into a threaded hole in one end of the level with a locking nut to provide for adjusting is a good means to check the desired percent of slope. Provision for adjustment up to three inches of rise will make possible checking slope up to six percent.

The thread tapped hole should be as near one end of the level as possible to provide close accuracy of slope checking.

As the paver spreads its first load of asphalt mix, the mat should frequently be "stabbed" or checked for thickness. After 20 to 30 ft of operation, the paver should be stopped and the transverse joint and new surface checked for texture and smoothness using a 10 foot straightedge. The texture of the unrolled surface should be uniform. If it is not, screed adjustments may be necessary. The adjustment of the screed, tamping bars or vibrators, spreading screws, hopper feed, and other adjustments should be checked frequently to assure uniform spreading of the mix to proper line and grade.

10.1.10 Surface Texture

The texture of the unrolled mat should appear uniformly dense, both transversely and longitudinally. If tearing or open texture appears only at the beginning of a day's run, it is probably caused by the screed not being heated sufficiently. If a tear appears under screed extensions, the alignment of the extension and the tamping bars and vibrators need to be checked. When the center portion of the mat behind the screed appears smooth but the edges are rough and open textured, the screed likely has too much lead crown. When the center portion of the mat behind the screed appears rough and open textured but the edges are smooth, the screed likely has too little lead crown. As a general rule of thumb the leading edge of the screed should have approximately 1/8 inch more crown than the trailing edge.

Tearing often occurs in a mix that is too cold, and which appears open and coarse. Tearing and scuffing will also result from improper setting of a paver equipped with a tamping bar in the screed unit.

A mix containing excess moisture will not lay down properly and will have the appearance of an overly rich asphalted mix. In addition to possibly tearing, the mix will bubble and blister and remain tender for a longer period.

When an inspection of the mat reveals obvious segregation or other surface texture problems, the cause should be determined and corrected immediately. Possible causes and cures of segregation and surface texture problems can be found in the **"MAT PROBLEM TROUBLESHOOTING GUIDE"** in the Appendix of this Manual.

10.2 LIMITED PRODUCTION POLICY FOR UNSATISFACTORY LAYDOWN

Article 610-12 of the specifications requires that in the event the laydown of the mix is unsatisfactory due to ride quality, excessive tearing, corrugation, rough surface, segregation, or other mat deficiencies. The roadway technician shall advise the Contractor that the work is unsatisfactory and that steps must be taken to obtain a satisfactory laydown. When directed due to unsatisfactory laydown or workmanship, the Contractor shall operate under the limited production procedures.

Limited production for unsatisfactory laydown is defined as being restricted to the production, placement, and compaction and final surface testing (if applicable) of a sufficient quantity of mix necessary to construct only 2500 feet (750 meter) of pavement at the laydown width.

The Contractor shall remain on limited production until such time as satisfactory laydown results are obtained or until three consecutive 2500 foot (750 meter) sections have been attempted without achieving satisfactory laydown results. If the Contractor fails to achieve satisfactory laydown results after three consecutive 2500 foot (750 meter) sections have been attempted, cease production of that mix type until such time as the cause of the unsatisfactory laydown results can be determined.

The Contractor may elect to produce a different mix design of the same mix type but if so, must begin under limited production procedures. Once satisfactory laydown has been achieved normal production may resume. As an exception, the Engineer (QA Supervisor) may grant approval to produce a different mix design of the same mix type if the cause is related to mix problem(s) rather than laydown procedures limited production would then not be required.

Mix placed under the limited production procedures for unsatisfactory laydown or workmanship will be evaluated for acceptance in accordance with Article 105-3. If mix is removed due to unsatisfactory laydown, payment will be made for the actual quantities of materials required to replace the removed quantities, not to exceed the original amounts.

The Specifications require that the Contractor construct pavements using quality paving practices as detailed within this Manual. The Contractor should construct the pavement surface smooth and true to the plan grade and cross slope and immediately correct any defective areas with satisfactory material compacted to conform to the surrounding area. Pavement imperfections resulting from unsatisfactory workmanship such as segregation, improper longitudinal joint placement or alignment, non-uniform edge alignment and excessive pavement repairs will be considered unsatisfactory and if allowed to remain in place will be accepted in accordance with Article 105-3.

The technician should refer to Section 7.4.6 when mix deficiencies occur or Section 10.10 when compaction deficiencies occur to determine if and when the Contractor should be placed on a "limited production" basis for either of those reasons.

10.3 PAVEMENT DENSITY QMS TESTING PROCEDURES – GENERAL

10.3.1 Density Testing Methods

The Contractor shall perform quality control (QC) of the compaction process in accordance with Article 609-7 of the Standard Specifications. The Contractor may elect to use either pavement core samples or density gauge readings as the method of density control. Non-Nuclear gauges (Troxler Pavetracker Plus Model 2701-B and TransTech PQI Model 301) may also be used for acceptance on surface mixes only. Non-Nuclear gauges may be used to monitor density on base and binder mixes, but are not to be used for density acceptance. (25.0 and 19.0 mm mixes). Once a method has been chosen by the Contractor, he should continue to utilize that method throughout the duration of the contract. The Contractor should not be allowed to switch back and forth from one method to the other. The Contractor should provide at the preconstruction conference the method of density quality control to be used and name of the individual supervising QC density control procedures.

As stated above, the degree or amount of compaction obtained by rolling is determined by either obtaining cores from the pavement or testing with a density gauge (Figure 10-8). The density gauge readings are correlated with core densities by constructing control strips on a regular basis. Regardless of the method used, density test locations should be determined on a random basis. The density gauge procedures (*See Random Sampling in the NCDOT QMS Density Gauge Operator's Manual and example in Section 10.4.5*) outline the use of a random numbers table to determine test site locations when using density gauge control. A similar concept is utilized to determine core sample locations within the specified lay-down length. Refer to Section 10.7.7 of this manual for the core sample procedure.

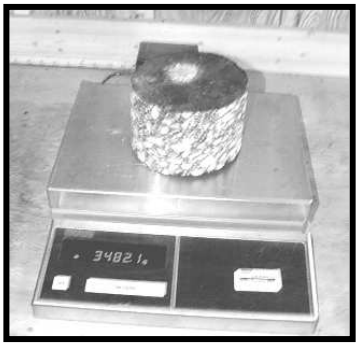

Roadway

Nuclear Gauge (Troxler 4640-B or 3450)

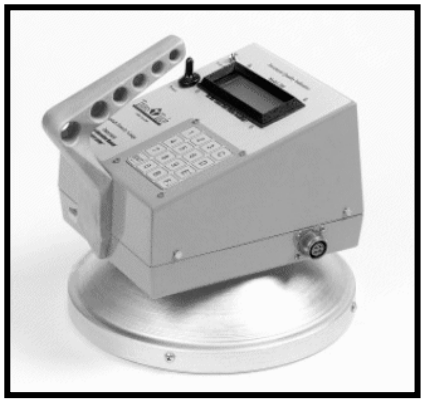

TransTech PQI 301 (Non-Nuclear)
(Density Acceptance for Surface Only)

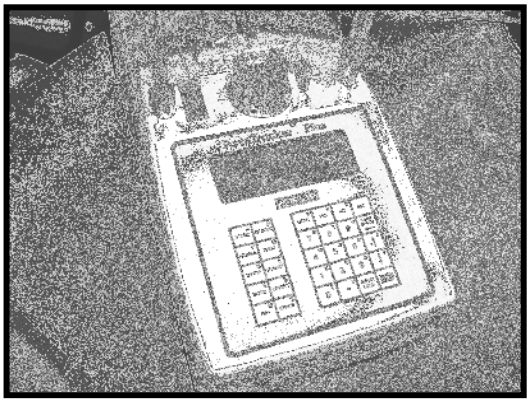

Troxler Pavetracker Plus 2701-B
(Density Acceptance for Surface Only)

Density Test Methods
Figure 10-8

10.3.2 Minimum Density Requirements

NCDOT Specifications require that all Superpave mixes be compacted to a minimum percentage of the maximum specific gravity (G_{mm}) as specified in TABLE 610-6 below.

Density compliance for nuclear & non-nuclear gauge control will be as provided in the current edition of the Density Gauge Operators Manual. Density compliance for core samples will be determined by use of an average maximum specific gravity (G_{mm}) until a moving average of the last four maximum specific gravities is attained. Once a moving average is established for density control specific gravity, the last G_{mm} moving average in effect at the end of the same day's production will then be used to determine density compliance.

TABLE 610-6
SUPERPAVE DENSITY REQUIREMENTS

Superpave Mix Type	Minimum % G_{mm} (Maximum Specific Gravity)
SF 9.5A	90.0
S9.5X, S12.5X, I19.0X, B25.0X	92.0

10.3.3 Determination of "Lots"

The pavement will be accepted for density on a lot by lot basis in accordance with Article 610-14 of the Standard Specifications and Section 10.8 of this Manual. A lot will consist of one (1) day's production of a given job mix formula on the contract, except that separate lots will be established when one of the following occurs:.

(1) Portions of the JMF are placed on a given day are placed in both "New" and "Other" construction categories as defined below. A lot will be established for the portion of the pavement in the "New" construction category and a separate lot for the portion of pavement in the "Other" construction category.

(2) Pavement is placed on multiple resurfacing maps, unless otherwise approved prior to paving.

(3) Pavement is being placed by multiple paving operations.

(4) Pavement is being placed for intersections

(5) Portions of the JMF are placed in different layers

(6) Control Strips that are placed during limited production

The Engineer will determine the final category and quantity of each lot for acceptance purposes.

The "**new**" construction category will be defined as pavements of uniform thickness, exclusive of irregular areas, meeting all three of the following criteria. All "new" construction pavement that fails to meet the specification density requirements will have an automatic price adjustment applied in accordance with the procedures in Section 10.8 of this manual.

(1) Pavement placed on a new aggregate or soil base compacted to the specified density, or pavement placed on a new asphalt mix layer (excluding wedging and leveling); and

(2) Pavement which is within a designated travel lane which will be the final traffic pattern; and

(3) Pavement which is 4.0 feet (1.2 meters) or wider.

As an exception, when the first layer of mix is a surface course placed directly on an unprimed aggregate or soil base, the layer will be included in the "other" construction category.

The "**other**" construction category will include all pavement which does not meet all of the above "new" construction category. Pavement in the "other" construction category which fails to meet the minimum density specification requirements shall be accepted in accordance with Article 105-3 of the Specifications.

Lot Determination

Lots are defined as one day's production of a given Job Mix Formula, except separate lots will be established for:

1. New Construction (on New Base or New Mix in final travel lane 4' (1.2m) or greater),
2. Other Construction (not meeting New requirements as described above),
3. Individual resurfacing maps or portion thereof,
4. Pavement placed for intersections,
5. Different layers of same job mix formula placed in the same day,
6. Separate paving operations (crews) will be separate lots, unless otherwise approved by the Engineer,
7. Control strips placed during limited production.

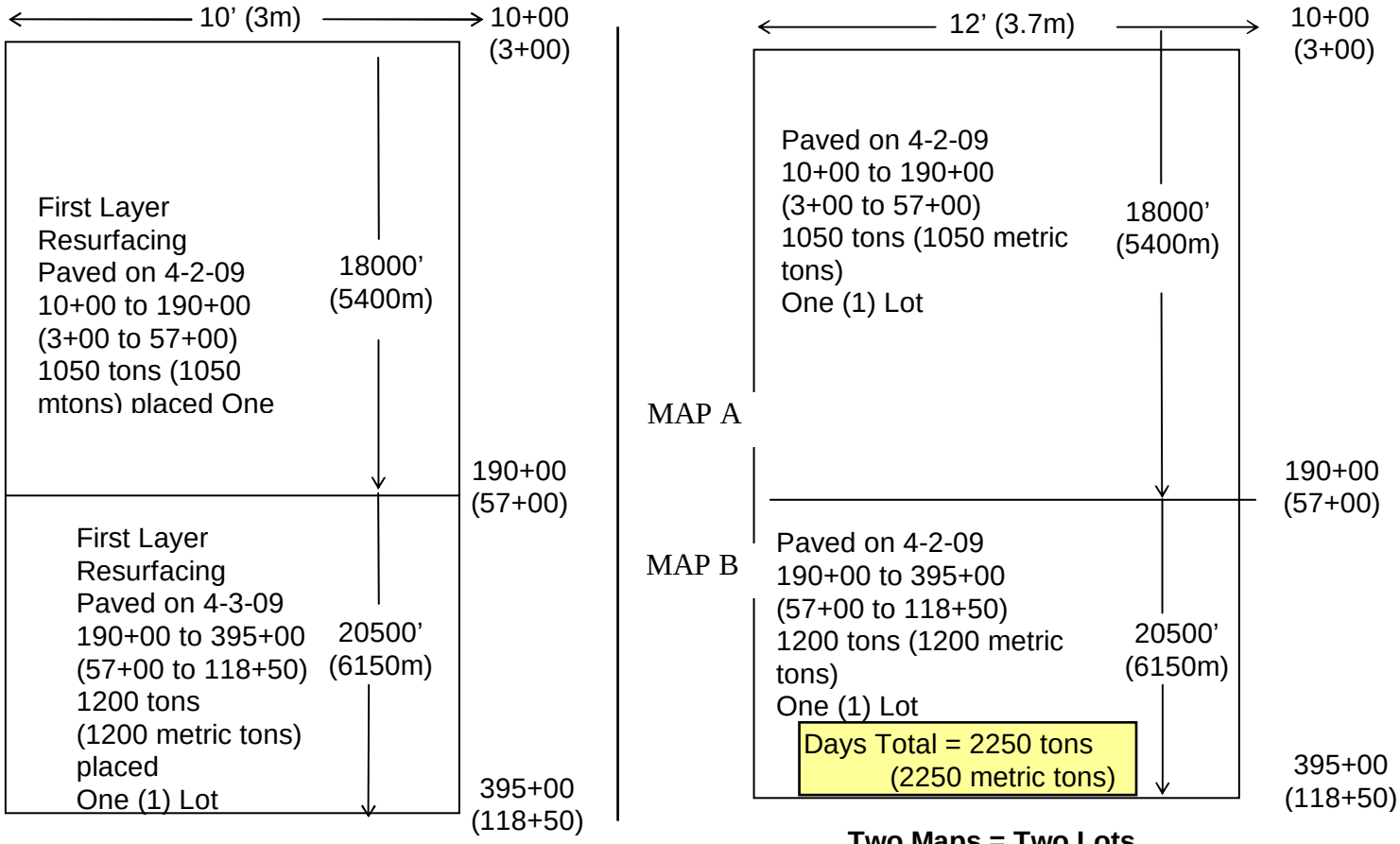

Second Layer Resurfacing
Paved on 4-3-09
10+00 to 395+00
(3+00 to 118+50)
2250 tons (2250 mtons) placed
One (1) Lot
3 Lots placed during
2 days production

Two Maps = Two Lots
Lots do not normally cross map lines due to the possibility of different pavement structures and/or different contract specifications; however maps may be combined into one lot if agreed upon by the Engineer and the Contractor.

Figure 10-9

10.3.4 Density Control Sampling and Testing Frequencies

Whether utilizing core sample density control or density gauge control, the frequency of sampling and testing shall be based upon test sections within a lot consisting of 2000 linear feet (600 linear meters) or fraction thereof placed during a single paver pull width. Do not divide full test sections, consisting of 2000 linear feet, unless otherwise approved by the Engineer. As an exception, when a day's production is less than 6,000 linear feet of laydown width, the total length paved may be divided into 3 equal test sections, provided that density gauge testing has not already occurred or core sample locations established. If the fraction of a test section remaining at the end of a day is less than 100 linear feet, it is recommended that the density be represented by the results of the previous section provided approved compaction equipment and procedures are used. If the remaining fraction is 100 linear feet or more, it will be considered a separate test section and shall be sampled and tested accordingly. See Section 10.3.3 for "lot" definition and density acceptance.

When cored sample control is being utilized, the testing frequency shall consist of a minimum of one random 6 inch (150 mm) core sample taken from each test section, except that not less than three core samples shall be taken from each mix type and/or lot placed on a given day.

Note: Random core locations will be determined on the QC-5 form and shall be completed by either the contractor's certified roadway technician or density gauge operator.

When density gauge control is being utilized, the testing frequency shall consist of five random gauge readings (one random reading from each of five equally spaced increments) from each test section except that not less than 5 gauge readings shall be taken from each mix type and/or lot placed on a given day. When utilizing a non-nuclear gauge, the testing frequency shall consist of five randomly located test sites from each test section. Five individual gauge readings will be taken at each test site and the results will be averaged to determine the percent compaction. In addition, not less than one test section (25 non-nuclear gauge readings) shall be taken from any acceptance lot of a given surface mix.

Sample and test all pavements that meet the following criteria unless otherwise approved.

1. All full width travel lane pavements, including:
   a. Normal mainline and -Y- line travel lane pavements
   b. -Y- Line travel lane pavements of uniform thickness in intersections
   c. Turn lanes
   d. Collector lanes
   e. Ramps and Loops
   f. Temporary pavements
2. Pavement widening 4.0 feet (1.2 meters) or greater
3. Uniform width paved shoulders 2.0 feet or greater
4. Pavement used for wedging *(not leveling)* when designated on the typical sections and when directed by the Engineer. Test sites/sample locations on wedging shall be where pavement thickness meet or exceed the following:
   a. Surface mixes 1-1/2" or greater
   b. Intermediate mixes 2-1/2" or greater
   c. Base mixes 3-1/2" or greater

The sampling and testing frequency specified above will not be required for the following pavement provided it is compacted using approved equipment and procedures. Compaction with equipment other than conventional steel drum rollers may be necessary to achieve adequate compaction for the paving conditions listed below. The Engineer may require occasional density sampling and testing to evaluate the compaction process. Densities for these excluded pavements which have lower results than that specified in Table 610-6 of this manual will be evaluated in accordance with Article 105-3.

1. Pavement widening of less than four (4) feet (1.2 m), Bases and Intermediate mixes only **(surface mixes types not included in this exclusion)**
2. Pavement used in intersections, all mix types (**excluding full width travel lanes of uniform thickness)**
3. Pavement used in tapers and irregular areas. Irregular areas have shapes that may make them difficult to compact. **This applies to all mix types**.

The Contractor shall maintain minimum test frequencies as established in the previous page. Should the Contractor's density testing frequency fail to meet the minimum frequency as specified in the previous page, all mix without required density test representation shall be considered unsatisfactory and if allowed to remain in place, will be evaluated for acceptance in accordance with Article 105-3.

QMS Minimum Density Sampling Schedule

TABLE 10-3

Core Control Method

Location	Point at which Sample is taken	Minimum No. of Samples	Sampled By	Frequency of Test	Test	Test Performed By
CONTROL STRIP (Limited Production)	5 Random Sample Locations within the Control Strip	5 - 6" (150mm) Core Samples	QC/QA Personnel	Core Sample Control Strip only required for limited production	Bulk Specific Gravity in accordance with (AASHTO T 166) or (ASTM D6752)	QC/QA Personnel
TEST SECTIONS	1 Sample located randomly within a Test Section	1 - 6" (150mm) Core Sample per test section W/ Min. 3 core samples per lot	QC/QA Personnel	1-6"(152mm) Core every 2000 L.F. of laydown width or fraction thereof per laydown width per day	Bulk Specific Gravity in accordance with (AASHTO T 166) or (ASTM D6752)	QC/QA Personnel

Nuclear / Non-Nuclear Control Method

Location	Point at which Sample is taken	Minimum No. of Samples	Sampled By	Frequency of Test	Test	Test Performed By
CONTROL STRIP	5 Random sample locations within the Control Strip	5 - 6" (150mm) Core Samples 10 Nuclear Gauge Readings (25 non-nuclear)	QC/QA Personnel	Beginning of each new JMF and bi-weekly(± 14 cal. days) thereafter or anytime mix or underlying surface changes may affect gauge readings	Density Gauge Readings with Core Samples Bulk Specific Gravity in accordance with (AASHTO T 166) or (ASTM D6752)	QC/QA Personnel
TEST SECTIONS	5 Random sample locations within a Test Section	5 Nuclear Gauge Readings (25 non-nuclear) per test section w/ minimum of 5 Gauge Readings per lot	QC/QA Personnel	5 Random Nuclear Gauge Readings (25 non-nuclear) every 2000 L.F. or fraction thereof per laydown width per day	Density Gauge Readings to be averaged and used for acceptance of that Test Section.	QC/QA Personnel

10.3.5 Procedures for Placing and Obtaining Core Samples - General

Core samples are utilized in both nuclear and non-nuclear gauge and core sample density control. This section describes the general procedures for placing and obtaining cores for either method.

When cored samples are required by either density method, obtain cores from the full layer depth of the compacted pavement to be tested at random locations determined in accordance with procedures in the Department's HMA/QMS Manual. When full depth cores are taken, the Contractor is responsible for separating the layer of mix to be tested in a manner such that it is not damaged. The use of a separator medium, including a shovel of asphalt mix, beneath the layer to be tested is prohibited. Marking the core locations on the pavement should not be done until immediately before coring of the sample(s).

Pavement layers may be cooled by approved artificial methods to allow cutting the core samples as quickly as possible. No additional compensation will be made for the costs of artificial cooling.

All pavement specimens taken by the Contractor for density testing purposes shall be obtained utilizing a 6 inch (150 mm) core drill. The coring equipment shall be capable of taking a representative sample of the compacted pavement and shall be approved by the Engineer. In the event a malfunction of the coring equipment occurs, the Contractor may utilize a diamond or carborundum saw or other approved means to obtain the required samples. The coring equipment shall be repaired and restored to use within three working days.

Where samples have been taken, clean the inside surfaces of the sample hole, dry, properly apply tack coat, place and compact new mix of the same type to conform with the surrounding area within one working day of the sample being taken. Use a circular tamp or other approved device to achieve compaction. **(A Marshall hammer works well)**

The samples must be handled with extreme care during the coring process, while being transported to the laboratory, and during the density determination process to assure the test results obtained are representative of the actual pavement density being obtained on the roadway. Many times, core samples are located, cored and handled in such a careless manner that failing test results are imminent even though in actuality, the pavement may have the required density.

Once samples are cored, it then becomes the Contractor's responsibility to assure that samples are immediately transported to the QC field laboratory in a proper manner for density testing. In addition to being marked with the core number, the core sample should be marked with the date and mix type. The QMS Certified Roadway Technician should ensure that core samples are taken for all pavements placed, as required, on the beginning of the next production day, not to exceed 3 calendar days.

The Contractor's quality control density core samples shall be retained for 5 calendar days at the plant site or until disposal permission is granted by the quality assurance personnel, whichever occurs first. The Department's comparison quality assurance core samples shall be retained in a sealed container at the plant site until obtained by quality assurance personnel. All retained density samples shall be stored on a smooth, flat surface in a cool, dry protected location.

All QC core samples will be recorded on form QC-5 (See Figure 10-19). This form will be initiated by the contractor's certified density gauge or roadway technician. All QA cores will be recorded on form QA-5 (Figure 10-22) which will be initiated by the certified DOT roadway technician **or certified density gauge operator**. Core samples along with either the QC-5 or QA-5 forms will then be taken to the appropriate QC or QA lab where the actual compaction results are determined and recorded. Core sample testing at the QC or QA Lab shall be performed by certified Level I or Level II plant technicians. QC core test results are to be forwarded to the appropriate QA Lab the same day. The QC-5 and/or QA-5 forms are then distributed to the appropriate personnel. (See Section 10.6.12 for distribution)

10.3.6 Determining Random Sample Locations - General

In random sampling, tables of random numbers are used to locate test sites in order to avoid bias (Refer to Table 10-4 of this manual) and to assure that all pavement has an equal chance of being tested. Once a random number has been used, it should be marked through and not used again during that calendar year. If all of the random numbers have been exhausted, then the process should be repeated.

For density testing, random sampling determines the length and width for testing locations. First, a random station within a test section is determined and then a distance from the reference edge of pavement is determined.

For example, if a density test location is required in every 2000 feet, then it should be randomly located longitudinally and randomly located from the reference edge of pavement within each 2000 foot test section.

The following are the basic procedures on how to determine random locations. Step-by-step instructions and a completed QC-5 (Figure 10-19), M&T 515 QA & 516 QC forms (Figures 10-13 & 10-14) are included in Section 10.4 and Section 10.5

Note: QC-5 form shall be completed by either the contractor's certified roadway technician or density gauge operator

1. Determine the test section length, control strip length, or length in question and the number of sample locations required by referring to the appropriate specification or procedures. Determine beginning station number of each test section.

2. Determine the random sample number by beginning in the upper left-hand corner of Table 10-4. The first two digits of the four-digit number will be used to determine the longitudinal test location and the second two digits to determine the transverse location.

3. Using the appropriate four digit random number that has been selected, place a decimal in front of the first two digits. Going down the column in the same manner, repeat this process using the next random sample number until the required number of locations has been determined.

4. Multiply each random sample number by the length of the test section determined in No. 1 above.

5. Add the distances determined in No. 4 to the beginning station number of each test section. This result will be the longitudinal test location within the test section.

6. Refer to the same random sample numbers from Table 10-4 used in No. 2 above. Using the appropriate four digit random number that has been selected, place a decimal in front of the second two digits. Going down the column in the same manner, repeat this process using the next random sample number until the required number of locations has been determined.

7. Multiply each random sample number determined in No. 6 above by the width of the test section. This result will be the transverse test location within the test section. This location will be from the predetermined baseline or reference line. No test site location should be located within one (1) foot of either edge of the test section.

8. Record the stations and distances from the reference line of each section on the appropriate form.

9. This random sampling procedure may be computed by either a certified QC roadway technician or a certified QC density gauge operator.

ASTM D-3665

Table 10-4

(Pages 10-33 thru 10-42)

	0	1	2	3	4	5	6	7	8	9
1	8121	3695	7367	7390	8568	9550	3107	3589	8240	3059
2	4185	5885	0699	3204	5610	3896	1692	2695	3354	9693
3	7423	7796	3747	8271	6052	8188	7913	4975	2525	3610
4	9153	3997	4351	5758	1611	0736	9949	9995	0791	5927
5	1617	6057	8761	8397	9092	0148	6552	7139	1588	0437
6	8760	3170	1224	4708	0815	7609	6584	4617	7047	6426
7	3588	2066	9567	9292	0174	4935	8792	5666	4876	7563
8	8103	5156	3440	4230	5757	5140	6858	5421	1223	8256
9	8871	2553	7202	1987	6385	6288	0497	0593	6161	1683
10	2558	2199	3805	9831	2606	0624	2742	6778	8157	3922
11	1647	1685	0752	8003	8052	2455	7920	1365	4418	6671
12	3135	8556	7712	6194	0847	4364	8858	2267	9994	4963
13	1724	3556	1740	5269	4034	9277	5271	2460	6228	9373
14	2328	3165	8382	7037	2065	4960	8404	6799	5599	9198
15	1350	8343	8993	2840	3880	6539	5501	9722	8424	2622
16	7427	7379	3549	1647	4225	0282	9025	2254	3500	7996
17	7022	0294	6714	9525	0941	3820	4074	8394	2468	9783
18	8582	9671	1036	5445	2233	6034	4240	2131	8345	7991
19	1345	4065	8880	5665	0032	7527	0726	8775	4522	2962
20	3849	0739	2216	6402	3115	4240	6081	2627	2578	9722
21	2250	7900	4486	2135	5081	2413	3685	5667	7988	4918
22	1078	4157	4885	8291	3507	0345	5105	9547	0599	5050
23	6836	1367	4019	5421	6796	1270	9592	0791	5013	5774
24	0978	2451	6865	3278	1912	7451	1343	8765	4038	9477
25	7835	8049	9898	8251	1842	7846	9007	9482	6945	6260
26	4356	9453	8545	5332	0915	6979	2074	2311	9361	8185
27	9158	3851	2403	5209	3580	1300	6650	3150	9335	5735
28	4316	7272	4590	6287	6553	9722	0058	0401	3953	8653
29	5549	7531	1942	3645	5393	0629	6401	3296	0927	2436
30	6446	5760	6850	8674	5189	9503	9662	6626	6170	8798
31	5533	5470	4593	4133	3524	9750	6566	4050	3014	9224
32	7379	0162	5237	1777	9430	2462	3288	5292	3377	8172
33	1664	5435	8368	3431	0291	8455	0159	9895	5849	5898
34	5630	6913	4948	7774	3575	0962	3186	9191	9381	0363
35	6847	7886	3963	8404	0751	0896	2633	9154	3847	5726
36	0950	4958	0297	1385	1083	8430	7831	4219	7010	1479
37	1363	4546	0731	3425	7256	0680	1903	7998	6275	1711
38	1184	2079	7299	9090	3535	3001	2088	1327	7482	8025
39	0736	5980	7034	6469	8688	6732	0461	5775	1210	7049
40	2673	8834	8132	0201	3634	0894	0819	6503	2522	6862
41	9059	7950	3589	1176	0131	8472	6691	6129	3032	5897
42	1605	7970	6152	4179	3269	1914	1468	9593	0850	2435
43	6865	3708	4096	0209	0469	7307	3216	3367	7560	9979
44	2379	2554	9753	2693	4604	8478	7480	7997	0441	8842
45	9821	7026	1331	3689	6738	8468	4876	5971	3939	2112
46	2140	9626	9884	3633	7163	5128	1821	9941	8127	5608
47	5432	6779	6373	6790	0845	7405	1457	6813	2481	6026
48	3460	8006	3670	6930	0523	5017	6487	1702	9237	1591
49	5265	7029	8790	6612	1052	8625	7070	3711	9177	8296
50	4271	3777	0048	6319	8807	0362	4318	9076	3108	2183

ASTM D-3665

	0	1	2	3	4	5	6	7	8	9
51	4724	4526	5407	2546	8332	4853	4422	1499	4129	5573
52	1277	8872	2569	9657	2544	8421	8617	8572	8662	1449
53	7992	6889	3350	1842	3408	8162	9357	5693	8528	4256
54	1908	4882	1892	0335	0131	9624	1024	5572	0089	4228
55	9525	7954	0657	9898	1340	9036	8409	3500	3784	6469
56	6089	6132	9614	6758	0288	0108	8623	8408	3360	3024
57	4909	2362	5297	3386	8329	8149	0845	6834	8831	4806
58	7386	1628	1494	8937	7838	8812	2994	6349	7933	8200
59	7320	7019	8328	7948	3274	5229	5753	0248	2559	0390
60	9763	0440	7154	0970	1852	3077	1522	3851	9877	6720
61	7820	1467	9175	7889	7498	3613	5527	7392	8590	1015
62	3167	2673	5391	5861	0901	4319	8630	9741	5844	7179
63	1701	9045	6529	3580	5265	5790	0414	1969	6780	7105
64	9024	2687	9310	8705	6172	4296	4610	4770	9415	5817
65	6613	4140	2942	2429	9435	8638	8063	1782	6352	7470
66	8449	3176	2217	2969	9996	0447	0516	7859	4525	9581
67	2557	8074	1255	0774	0337	0577	1722	9844	2828	1217
68	9599	1141	1301	9528	2589	1320	7096	1065	3956	6446
69	1992	3807	2096	2780	3358	2803	1457	3717	7601	3117
70	9415	4611	2177	6089	5341	5515	5414	6149	9383	6722
71	6277	6742	2609	2270	6942	1263	8254	1222	7007	7702
72	6330	0455	9317	8445	4361	5738	5322	4667	1433	1937
73	3087	5719	9831	9429	4720	7923	3490	3870	4504	4822
74	1623	3781	9202	2754	1574	3176	3289	3261	9601	8993
75	3456	3994	6498	8484	2594	2955	4836	9337	1417	6546
76	4065	3370	8734	2929	4353	0030	8154	6112	8268	3625
77	3117	5586	3840	7581	0440	7342	1148	2381	9102	6323
78	5770	4381	6456	4863	6505	2027	3656	4672	4027	5691
79	3540	0884	0684	7373	7772	2173	5824	6140	5151	2873
80	1383	6130	0608	0641	1401	3446	0809	6275	4667	6200
81	1694	1598	9773	1641	7271	9571	0956	3317	0638	1462
82	2261	1353	1201	0736	8451	0263	0675	6441	5095	5745
83	0879	8102	3441	9589	6066	6034	2895	0705	8152	1118
84	0267	1101	5030	2776	4676	9728	9698	0278	3653	5743
85	2050	0889	3674	9318	0837	2335	5784	4499	8971	3147
86	6512	9995	8944	5634	7796	4263	9758	6645	1275	1092
87	7778	2306	9643	1905	5315	3015	3158	7265	0190	2208
88	8201	5616	9194	1858	9491	0217	4368	7537	5073	4929
89	2415	0561	8289	2994	7341	4908	1498	8806	9611	5683
90	1938	6471	6108	5497	8081	5295	2897	5618	7229	3668
91	8780	5691	2190	8789	2697	8130	1357	4497	4674	6903
92	8632	5993	7960	0241	5771	9741	9251	3265	6100	6505
93	8636	2303	8091	0273	2265	1886	6465	5330	3707	6802
94	2814	8569	7178	0352	7279	8659	3164	3247	3857	9803
95	7407	7803	7879	1235	4695	8607	5468	3632	5282	4763
96	6352	6868	2150	6844	7191	4442	1561	8629	8724	7650
97	3135	5350	8557	9532	7192	5708	2930	8740	2747	5827
98	6418	0736	8251	5329	6641	8120	8985	3926	6810	0857
99	2070	3609	9184	7250	1270	8171	3581	7679	8326	3488
100	6862	4480	5051	5262	8832	6762	0369	2089	6209	1998

ASTM D-3665

	0	1	2	3	4	5	6	7	8	9
101	2899	1397	0235	0319	5904	0003	8088	1905	7733	8060
102	7825	5409	9375	8387	7821	4044	2004	3784	4062	1510
103	2554	7423	3644	2702	5572	1547	4754	7605	0586	7517
104	9202	0022	0512	9403	4981	0887	8136	3810	2234	0531
105	6587	4132	4073	1627	0845	7391	5286	9327	8620	8679
106	2936	3705	1683	6125	9589	4711	5039	2451	1535	1785
107	0866	5059	3535	4076	3550	7915	3887	4104	9853	0749
108	2291	1818	2466	7884	2218	2089	8594	4615	9316	4174
109	4657	3232	4034	2133	7406	5246	3377	8644	3751	7402
110	4684	1278	1045	7780	1042	3752	8510	4452	6530	4322
111	5150	0521	7345	5987	0250	0216	3283	6590	0612	5895
112	6216	0290	0287	1327	1261	6902	7833	6256	1022	6096
113	0299	4050	7214	6390	7254	0100	1926	6506	1355	0648
114	8268	5594	6620	4371	2606	9710	1366	9945	2715	7083
115	2147	1822	7118	9840	2088	9800	0022	8955	2936	9209
116	1993	1361	4090	4753	7990	2339	6809	2638	2294	4783
117	0888	8380	5567	0165	5333	9343	6287	0128	7050	9734
118	8392	0864	4284	1869	4291	8100	3582	2437	0650	8812
119	3474	8099	3307	8070	2799	5794	5904	4804	5860	4604
120	9301	9691	6256	6788	5190	8793	7480	2763	0468	1625
121	1853	7462	9459	9440	9875	7335	7369	8559	0987	9817
122	8015	2527	0764	8683	6457	3355	0294	1177	7623	3952
123	9671	5790	1460	9181	3987	6303	0321	3132	0770	7984
124	3144	7732	9614	3003	7232	0436	1470	5735	3160	5356
125	8246	3283	0251	6136	8041	3041	4981	2605	7530	0581
126	9410	9785	5355	5616	9907	9222	5300	3212	1632	0273
127	2616	5706	2815	1768	8394	0528	5177	1961	7451	0067
128	8657	8901	0217	5872	8963	8326	0714	8769	9706	0651
129	6101	0251	5333	5253	7051	5492	5837	9508	8029	2154
130	8736	4493	5116	1812	9457	9663	8396	0350	9900	7197
131	2240	8483	1383	3288	5045	6135	3773	0869	3415	8494
132	7945	5971	1429	9426	6198	2241	1371	6798	9069	0059
133	0107	7447	9726	0740	2626	8312	1683	6095	3929	4847
134	2686	3354	9387	1732	9036	2679	4551	0372	5562	1932
135	5762	2898	0169	9265	1804	8196	4461	3044	8148	3440
136	2362	0927	2213	1456	5872	7563	7873	8148	7408	9834
137	0943	2552	3463	5792	1722	5702	0579	2125	3553	7613
138	0968	5505	7917	7812	3297	0996	9626	3931	4954	8197
139	7411	6269	7709	2010	5424	7489	4087	1861	7894	2424
140	1229	9675	5555	1766	3242	2756	8831	1411	6424	6419
141	5477	7684	5707	6457	4473	4401	1814	1203	8406	1503
142	2924	2030	0232	0669	2015	2321	0028	3343	0103	9635
143	6147	3463	9393	6931	7262	0635	0100	2920	6879	9018
144	5397	1006	1167	8094	7679	9271	9529	2107	0380	2781
145	4924	4787	8326	3602	4829	8769	7156	3560	0245	0460
146	8302	2334	7454	2980	6858	8002	9723	6961	4359	2603
147	8116	1613	9955	7589	6207	6364	1470	4641	3399	4119
148	7772	0518	6668	6220	6073	5577	1132	4089	6615	7817
149	3005	6141	3449	7778	9822	2978	6583	6365	4640	9828
150	0515	2611	5698	1784	1272	6277	1186	6157	6562	0114

ASTM D-3665

	0	1	2	3	4	5	6	7	8	9
151	3801	9094	3984	9662	7013	4675	3305	9477	6052	6463
152	5112	8493	3522	9082	1259	9393	1363	8384	9077	7256
153	6661	7321	5734	2238	7349	4913	2483	8800	2084	5533
154	9440	7478	8781	8877	0784	0963	6873	1825	1932	5033
155	5575	9490	3125	9746	8568	4724	1302	3744	5244	2820
156	5284	0256	6717	4189	4073	4327	3656	5039	4245	6650
157	9402	0218	7307	4515	6334	8394	3425	6806	3673	5666
158	3906	6392	1065	1416	8697	0728	7785	5091	3460	7425
159	2766	6735	3663	1802	1945	0226	2890	9448	7061	6863
160	0941	1822	4303	2196	5075	6276	2804	6772	7075	9958
161	9641	5726	2258	5528	1576	9655	1350	9548	4420	1533
162	8979	7285	9994	3207	6047	2331	8674	6722	4125	0510
163	1714	8090	1709	6994	1431	2278	2794	2976	6309	2646
164	4473	4405	2564	4567	3264	2473	8196	0385	5586	9738
165	5375	7532	1932	4760	9993	9806	9774	0254	5170	5947
166	4603	9646	8579	9149	1790	4482	1995	3069	0243	2391
167	8730	2372	0050	5351	0881	0813	7665	3128	1342	1692
168	2327	6572	9247	8958	3354	2747	5210	1817	6554	7970
169	8861	7298	6073	4138	6858	1097	2735	4934	3751	3858
170	6806	8850	7228	1330	8635	5597	1984	6638	0457	6876
171	8652	8362	1567	4844	5784	2737	9932	1684	8423	2794
172	6088	8885	2404	3769	3819	1362	7183	4445	7179	8671
173	1815	6022	9460	7823	8611	4410	7561	2609	0254	4294
174	3473	8945	0964	8240	6844	0396	3358	8447	7657	9587
175	4161	4157	7503	9125	8884	3890	8211	8391	2024	0696
176	3023	6708	3570	8685	3584	8230	4494	8788	1539	1088
177	5655	0644	5188	3485	6691	2698	5291	9690	3617	5423
178	8740	9861	2845	2286	6512	5913	4321	5439	4228	7904
179	1434	3335	3009	1410	9929	3214	2694	0530	6950	8837
180	1737	5691	9354	6787	2523	6040	3340	3542	1793	8388
181	0161	8195	9583	6276	0864	3568	4505	2997	2970	6221
182	9370	2850	5188	0492	0391	3796	2465	6420	2489	6883
183	3775	2928	8101	1313	6547	3748	3816	9558	0907	8016
184	6584	0790	2139	0854	2152	1231	4360	5694	8259	7658
185	4667	7582	2206	8373	2859	7140	3121	9352	6677	2725
186	6455	5130	1084	2872	4378	3176	7364	1393	1209	4810
187	0060	5586	6029	8412	9000	6808	0742	6397	4092	1542
188	6850	8675	7744	0269	2198	8756	1343	6312	8701	6551
189	2517	8132	4397	7633	4431	8702	8616	3250	0689	3254
190	1036	5789	6891	3343	0728	2997	0805	5021	4329	1727
191	9404	1396	6110	1404	4309	0810	5538	8437	6531	6233
192	7108	3253	6374	5536	6072	1705	0244	4504	4154	6666
193	0998	2139	0131	0188	1107	9274	3802	4429	7715	4470
194	1886	4751	0727	3940	8296	4045	8515	5907	8092	4462
195	0410	0317	6966	2726	0128	4489	9773	6389	8605	3374
196	5696	2690	8968	1055	1258	7378	0854	5822	9896	3157
197	4121	7845	1399	1548	5388	9814	5393	2307	2361	0736
198	2653	7554	3951	3033	4620	7119	9086	6337	5045	1744
199	9176	7228	0312	9807	0250	2529	3850	6094	3210	8576
200	7889	9222	3120	4810	8011	6547	0712	4644	2915	1757

ASTM D-3665

	0	1	2	3	4	5	6	7	8	9
201	0160	2080	4447	0987	8028	0893	8971	4711	3498	3214
202	5154	3661	9389	4489	7934	9303	5863	3013	5960	5528
203	5870	7150	9710	7592	9833	8508	3822	2767	7342	6994
204	3100	6300	8049	4190	3168	3921	3590	0225	2444	8492
205	5721	0309	6235	4420	9760	7120	5067	3677	5445	0166
206	3352	3597	3545	8929	7566	0659	8025	7646	9962	3558
207	6012	7380	8185	6058	4767	5729	4316	9275	0165	7284
208	3073	6406	9675	6618	8058	4886	0622	1399	1322	1086
209	8960	3547	7335	4895	8266	8777	8528	6159	6862	4045
210	9122	3189	1137	8510	4541	6840	2240	3387	7152	0303
211	1459	3953	3028	1387	5810	0653	3473	3428	9380	2324
212	1746	0560	8354	7708	2285	0271	3940	5701	3009	2806
213	0002	5212	7917	1803	3365	8926	5320	2260	1558	3065
214	7182	3788	0033	3700	7801	5444	4538	1490	2168	6773
215	4667	3429	8106	3438	0475	2585	2001	5522	0656	3263
216	0497	1847	8938	3034	9088	0171	0268	2200	8611	1604
217	0507	6271	7963	5876	9848	6195	7756	7009	2988	7755
218	7712	8211	3476	8087	9668	8525	1300	4946	7825	5942
219	8367	6320	8873	1714	2606	5061	7947	5577	2369	9865
220	4797	4636	8743	7654	8582	4404	1427	3184	4330	0629
221	2723	7808	4212	2829	5409	5536	4273	8463	3195	4760
222	0735	1290	5356	2656	0184	7098	3047	3119	3717	9146
223	2403	5596	2312	9495	7795	4340	5345	9760	0604	6924
224	3159	9707	2005	5170	5385	2547	2543	6824	1799	8770
225	1520	1715	5788	6617	4883	4298	5045	8441	7470	4036
226	7108	6343	3412	2468	9933	5243	6088	7536	4596	3891
227	0791	8526	5671	7048	9002	0659	0712	4177	1228	1953
228	1780	9336	7203	4396	8396	4545	1135	4896	5366	0708
229	5516	3683	9549	4366	9107	4131	0201	2591	8025	9653
230	4461	4751	8082	6812	2137	6132	3883	6558	4226	8948
231	9626	8918	2457	8185	7717	5394	6638	2502	5582	1122
232	6756	7753	9709	1035	2772	7304	3299	6694	7537	6602
233	5407	0516	5724	7163	4100	5175	9404	1533	5711	8976
234	2672	7284	8051	4037	8002	1559	8356	6394	7363	7046
235	3992	8742	2106	8239	9159	3264	7613	9875	7878	7387
236	0941	1041	5118	2023	0290	2367	8715	9205	1938	5930
237	6365	6705	4441	2372	1088	2556	2213	0804	4489	7373
238	0058	8038	0108	2366	7422	3279	4601	9582	5242	6909
239	3417	7647	7349	7279	6742	3162	5055	0446	7634	3001
240	3909	5035	8407	3799	8675	1271	1819	6555	1005	6819
241	2772	9332	6565	2386	1611	2155	9020	3950	7153	5833
242	1877	7002	4835	9720	4422	1244	7862	4014	9350	1454
243	5350	9156	7710	3431	5303	5049	4557	2826	3733	2119
244	4392	1336	0343	1648	8757	7994	8513	1310	5117	0218
245	0620	6016	8767	1768	3029	5651	1550	9273	5604	0129
246	0385	6746	3438	2298	5509	6194	7003	5151	3174	8353
247	5154	0200	3042	9369	0554	9107	5780	9933	5404	1179
248	0892	7126	7857	8375	0529	3641	3036	2352	0648	6838
249	3004	0224	9766	8811	4449	0446	0423	4018	5293	5149
250	2137	9259	7064	9222	0414	6276	1801	6341	3821	2858

ASTM D-3665

	0	1	2	3	4	5	6	7	8	9
251	8738	0126	5574	8727	9689	5310	8428	8939	3604	5463
252	8286	7025	0656	8101	3620	4040	6008	5988	4441	7366
253	5196	2398	3488	9799	5889	4995	9320	5810	2571	5018
254	8629	9583	2781	3710	3393	8053	2582	9954	7504	3172
255	1491	9040	7888	3142	0234	4314	6470	0272	6718	7455
256	6885	0882	3539	4555	9705	2851	0905	3691	3599	1263
257	2744	1556	6438	8433	1455	0961	2163	3205	6737	2458
258	7151	4750	6095	5337	0351	0195	3534	3551	9057	9258
259	0932	2673	3303	1271	0693	6085	5436	5071	8613	7754
260	3787	3647	2774	1479	0705	5762	9109	7973	0234	1627
261	5432	0890	5955	6306	0808	0595	5370	7828	9060	0900
262	4411	8675	9501	0470	3187	6746	9460	5219	6861	0252
263	2517	0941	1742	0320	1066	1632	3340	1779	1953	0403
264	9893	3022	3122	4194	2431	6441	1150	2419	0993	2814
265	4458	0712	8286	9156	0144	0853	2889	0752	2071	1967
266	2555	7714	6454	8424	2953	4083	5523	2402	5565	4877
267	9216	9051	0503	0948	3618	4645	9480	2773	3263	5260
268	8339	0418	0138	0621	7659	7614	7447	2702	8050	4418
269	0578	4867	2949	3278	9353	0528	6996	4985	7466	0562
270	1549	1857	8046	0828	6272	0429	3418	9482	6414	9865
271	6080	1044	7694	6380	2586	6890	0180	4510	5746	1061
272	5713	8882	2767	5543	4617	2028	7467	4201	4546	1038
273	1852	8853	3535	1588	3713	2645	5695	5920	3976	9559
274	9983	4276	6356	1430	6712	1960	0864	8141	1250	9109
275	2769	3262	9067	0222	5427	2138	0284	1652	8306	2801
276	0402	1540	1261	9724	7973	6497	1002	8296	8932	0561
277	2905	4816	1993	4133	0624	3722	7657	7018	5478	4947
278	8015	1002	2080	6152	6669	8702	9072	5154	5566	1960
279	8121	6009	2869	1354	3365	5494	4981	4995	9980	2596
280	5677	4328	8722	7179	6546	8694	9106	8683	4810	8793
281	5711	1090	2359	4469	9969	4643	0883	2827	0760	9017
282	8322	0249	3762	9962	7734	1456	9845	5780	3579	1940
283	2428	0148	6214	3472	8179	9928	7228	7385	4670	0145
284	4788	3796	8751	5801	7445	6592	6390	6925	3650	6391
285	1433	8831	7715	4040	9742	3589	3711	7050	4629	4769
286	4915	0972	1814	3753	3967	3774	4364	9655	7802	3470
287	5797	4758	0360	5646	8279	0078	9379	2050	5316	3735
288	1165	0540	1930	5730	2238	1212	5065	8288	1810	9952
289	1080	9746	9275	7872	2134	5756	6437	2613	8853	1388
290	9206	4169	5360	5897	8004	1263	1236	5349	0249	9954
291	7819	2316	2825	7552	2271	9595	5164	3306	5171	0588
292	8685	7689	9104	0477	0014	9977	0217	6092	8398	1493
293	5851	0869	0133	3025	9018	1154	4884	4605	8822	1712
294	8435	4257	7097	0086	4301	5930	4664	8767	0234	3160
295	1855	9220	1119	1450	2328	4328	3201	9835	0840	4623
296	4076	7372	7956	0744	0372	0902	4705	4243	3484	4177
297	2822	6671	0417	4235	8325	3187	8026	6820	6841	4386
298	2496	2711	2495	6289	7810	1554	3918	2795	3482	4791
299	5622	8509	4646	7790	3264	8837	7194	4731	6819	2442
300	4008	4838	2492	0135	9561	4802	1081	0023	2238	6158

ASTM D-3665

	0	1	2	3	4	5	6	7	8	9
301	7971	9600	7771	8772	8435	2027	5803	0033	8970	4155
302	8916	5699	0591	8719	4498	2609	0459	7647	0320	1406
303	6942	5255	4686	8671	0435	8762	6161	7763	0228	9421
304	2294	8229	7456	2523	9850	4054	0943	5591	2951	4550
305	1645	0141	6784	7107	7772	4759	0825	7146	0683	6241
306	0949	7024	9174	7412	2993	5904	4995	5453	7312	1372
307	3293	0519	4628	7255	5641	3126	5726	2759	8034	7946
308	6061	4830	5023	1703	9558	2275	9429	2446	3771	1867
309	8269	1953	1720	7596	7750	4879	9931	6103	0351	7966
310	3898	6464	1927	8613	1479	7301	5411	3028	9727	2956
311	1216	5466	2732	1629	7795	3961	0034	0275	8634	7286
312	1932	4667	6220	3122	8644	2691	3519	4722	8363	9069
313	6282	3202	1882	6210	3919	5503	3479	0715	1592	4739
314	9945	4743	0529	0479	5508	4757	2391	6105	7648	8866
315	4640	1838	4422	5173	2505	3431	0148	7781	4495	9296
316	7556	2059	5748	6791	6495	1305	6639	4561	2675	4285
317	9486	8085	6798	4929	7497	8939	1496	1278	4137	3868
318	4833	2442	3674	6391	2363	9950	9302	1287	3896	1341
319	2327	4580	3942	0111	9792	6565	9369	6582	6979	4906
320	8863	7379	8320	4208	2733	7322	6314	4918	2082	6269
321	9973	0331	0667	3872	2031	8732	6123	8979	9625	1717
322	3339	0207	1905	5488	0284	6400	1988	6052	4194	5108
323	8389	2826	7292	3980	3218	4038	8662	3648	2386	9707
324	3180	7799	3047	5571	3707	2169	3793	4893	9386	5076
325	8191	0589	5106	7833	7842	8730	6251	0164	8707	7143
326	5253	0006	4530	8929	7185	0777	5710	9929	4266	3976
327	6528	8627	8978	7845	0664	6075	8496	3007	3578	0054
328	7664	6718	2538	9486	5703	7120	8521	3092	5061	6758
329	2582	6415	0185	1376	1930	0611	5333	0381	0880	5173
330	1136	9939	4940	4262	4442	0616	1642	3711	6661	5900
331	7513	7500	7655	4979	0730	8292	4986	7596	3652	8795
332	3446	3239	5826	8234	9200	1745	5635	7985	9250	5137
333	5455	3963	9270	7772	2076	6947	1196	3554	4870	9012
334	5924	9407	5714	2668	3667	6455	3736	8000	0996	6479
335	2062	0663	9732	7210	7176	0600	2711	8263	8836	0248
336	6634	8562	4390	9896	5874	8468	5407	2706	5132	3233
337	5243	5667	4099	1093	8198	0419	3648	5472	3009	6040
338	9597	7559	7021	5907	2099	4749	8298	9985	4888	0488
339	7760	2517	3740	1071	9069	0307	5007	6464	8696	7642
340	8368	7543	9761	8222	6295	1429	8476	0702	5817	2201
341	2369	6985	1520	0657	5866	0305	8556	2679	4856	4545
342	1448	7833	1185	7564	2764	3037	4394	4471	3569	8648
343	2818	8346	2583	1128	2617	3164	5323	8621	7900	5153
344	9695	5029	4842	1958	0011	1191	8417	3693	0577	8155
345	9332	6231	6059	4504	5868	0919	8981	0255	5019	0132
346	9973	3782	2950	5578	6946	5306	0573	7584	4650	0914
347	1079	9960	5463	8782	3807	5847	1143	4970	9450	6702
348	1996	2975	2548	8115	5636	6783	2446	2212	8888	6953
349	6143	3506	0304	7631	5600	5362	5023	4429	7326	4962
350	1881	1015	7634	1233	0344	7387	0618	5230	6089	1658

ASTM D-3665

	0	1	2	3	4	5	6	7	8	9
351	2474	2846	2138	5148	5456	1827	9249	8511	0456	6711
352	4891	7097	6509	4975	1459	6666	6905	3446	6806	4006
353	0681	8014	6654	3268	2308	4404	8269	3880	1971	2340
354	8057	0244	6347	7837	9492	2710	8695	0157	8189	3298
355	6464	4582	6471	4256	9834	8259	5265	3994	9955	1857
356	8676	0217	6172	6026	2868	1308	4572	1540	8804	3022
357	7846	3762	1800	9549	8226	8940	8827	0862	1348	9595
358	5626	3873	6843	8420	6150	6098	1083	3060	4812	6298
359	9845	0138	1001	8645	0162	5240	6390	2301	7392	6690
360	9353	3771	5724	1013	5155	5456	1138	8420	1786	6626
361	6935	8841	1406	5737	8874	6992	5836	6368	0409	8243
362	0104	7282	8203	1156	6698	0060	2171	2400	7803	3631
363	5035	3811	5070	6267	6210	1465	2385	3399	1286	7238
364	9862	2735	5941	1736	3534	0971	5609	3581	2044	7319
365	0225	7328	1950	1095	8808	4012	6196	9592	7294	9312
366	7538	7869	0825	5632	6534	5707	5876	6540	4431	1354
367	9848	3955	0524	8485	0471	7074	5687	3348	9644	6513
368	8352	2284	5922	1596	4777	0526	4480	5497	5321	6962
369	6165	0280	8626	6560	6573	8171	2403	1660	8348	0153
370	0434	1242	8901	0752	4918	6366	8283	9303	5193	9159
371	4811	9244	4548	0196	2696	3400	2953	4985	3480	8546
372	0577	9457	2264	3497	2752	5823	5782	3961	8965	7713
373	1290	5220	7325	4913	0769	6142	2579	9710	1406	1196
374	8753	2693	7801	8681	2428	9102	6276	7679	1295	5501
375	1837	0731	4801	8869	2053	3620	4074	8615	5519	8346
376	3445	2093	5420	9643	7743	9290	3672	3090	7199	5490
377	6756	9995	9813	8272	4085	7116	6738	5947	1378	0111
378	2686	1974	4635	5511	0123	8896	2424	4066	7619	7305
379	9794	0151	2672	8724	6101	8873	5479	3676	3860	3475
380	4695	4339	2138	8908	7220	5788	1324	9837	8447	2175
381	1747	7440	8716	6254	0012	6060	5348	7185	5750	4662
382	1886	5166	7379	5530	8367	9896	2266	4165	8824	9835
383	1349	0670	0860	9406	8648	5621	8679	2194	3603	5648
384	2797	2535	1992	1905	0009	0033	4927	6876	0742	2964
385	3128	0069	2354	2819	4161	7102	2964	0416	2039	2529
386	1412	8649	0922	3149	3872	7622	9557	8675	0588	0191
387	2729	8481	1359	6697	3619	1353	7129	9649	1809	2201
388	2314	4349	4646	6545	3947	1674	4343	2835	2779	7938
389	4132	8683	4436	5899	0690	6158	6727	6992	4698	2044
390	4446	9426	3046	9184	0839	1683	1638	0381	9034	7293
391	6528	3645	6113	5319	4499	3842	2293	7107	7186	1688
392	3669	1878	2310	3170	1473	5727	8861	7295	1091	9753
393	9248	4854	1800	4241	6937	1053	4814	1170	0575	2612
394	1911	3848	4153	9481	1670	5639	2993	7943	3589	4976
395	6284	3306	7926	7823	0740	0951	6620	7050	8092	8800
396	7668	5957	9100	2999	9574	2412	7182	4656	9566	7086
397	0474	0478	5909	3983	2785	6208	5172	4475	0281	4669
398	8195	1115	3544	1547	4574	2611	7372	6316	9498	2554
399	1147	4374	0906	7740	7090	4901	7056	9893	7207	7998
400	4852	8998	8520	1484	9872	7766	3586	4545	4610	4880

ASTM D-3665

	0	1	2	3	4	5	6	7	8	9
401	5903	2815	5600	3726	1747	2955	1887	2011	7023	2262
402	3919	7784	5844	9245	3032	0608	9045	6136	6952	8731
403	9503	3716	3501	0070	8298	1316	4132	4493	1861	0291
404	1086	1533	8345	5845	8600	4197	5063	1374	4890	9987
405	5996	8476	1614	5369	4138	6956	4761	7831	6253	5064
406	8436	0235	4916	7933	9734	4990	8029	6291	6313	7833
407	9786	0111	7147	9737	5904	9592	1918	3297	6639	8205
408	3818	9483	1180	3180	1560	9700	2598	6046	0978	9764
409	2080	2054	4466	3751	7813	0263	1414	4956	3837	4371
410	4294	3586	6006	3516	8383	9750	7403	8479	6064	6365
411	5412	0398	8619	7465	0449	3417	3759	1558	2947	8310
412	6177	7183	9247	4137	5425	4237	8035	4045	0093	2706
413	3381	3433	5711	5851	2136	0809	9689	4387	7166	6189
414	7027	2221	3889	9224	0597	3938	0041	6989	3954	3096
415	1136	3027	1515	2864	6250	5302	9795	5258	7223	8749
416	6343	3439	1807	0720	2440	2421	1456	2590	4164	9753
417	2124	6593	1687	9250	2937	5882	8580	3502	1821	7647
418	9325	4010	7456	2642	0180	9342	1220	9180	4981	4833
419	2340	2698	8789	1934	9747	7965	4748	4876	7761	3657
420	8104	0685	7177	4315	9974	4043	5756	2395	4274	7237
421	0853	8104	7012	6149	7514	7766	3877	7970	3408	8541
422	4592	1909	8828	0411	1621	2734	3756	0381	0688	7771
423	9309	2879	5269	0957	6308	0144	6880	7062	9329	5785
424	1421	6802	5710	3728	7241	8441	0393	4421	0624	1559
425	7599	8835	2748	5413	1506	5048	6173	0059	5326	4605
426	1801	9449	0797	3895	8311	0289	4797	1398	8431	1286
427	3294	9090	8380	5944	6006	1522	2214	0292	6575	3530
428	3445	2270	3259	7507	4084	7868	5625	1212	8575	3991
429	1022	0982	6854	1429	3931	6639	9170	1290	8998	8304
430	1019	2949	3740	2736	0035	9443	2872	5922	9422	4088
431	3259	0725	4998	6694	2155	6976	0381	6600	2252	2088
432	9556	6103	8231	6413	4297	2694	2367	9508	3610	4606
433	2916	3812	8645	8275	7166	8914	4340	8743	8870	1759
434	1634	3824	5008	4400	7670	7111	0210	6252	6571	4695
435	9727	1073	8076	9090	9802	9161	1969	4320	8970	4953
436	8288	1981	1202	5977	4534	1534	0361	8131	9021	1074
437	1991	0425	1232	0507	9400	3951	1574	6427	4018	0565
438	6855	9445	8507	2710	7031	3891	4395	4966	6465	0254
439	3829	3090	2294	5862	8456	0838	4262	2207	9315	1708
440	0687	0834	7690	5627	8793	9704	8979	3715	7620	1140
441	1192	6075	3222	8556	6901	0933	4516	0926	4335	4495
442	0828	8628	5557	4267	8715	4172	0999	3878	2273	7895
443	8506	4635	9763	3061	1415	1827	2584	3268	0820	6347
444	3664	7739	5915	6699	1254	5051	2199	9780	8256	9094
445	5207	0281	3380	4663	3723	3713	6068	7919	4572	3562
446	4758	3038	9066	6631	2989	0399	5011	3155	4363	5134
447	2948	2150	5274	2619	0872	4823	3397	9551	3514	0578
448	2916	6211	7975	3521	0002	8336	3572	4460	8194	4152
449	4074	8791	1711	9092	1662	1968	5890	8876	7886	8459
450	5522	0630	9099	9412	1987	2213	0365	0857	7059	5607

ASTM D-3665

	0	1	2	3	4	5	6	7	8	9
451	2818	1644	4095	6517	7888	7497	2504	8517	4795	9180
452	4008	2178	9797	2511	0230	3206	4609	9199	9555	4257
453	9270	6757	3094	1902	9576	4245	1907	3537	5024	2212
454	4283	0575	9216	8849	2046	6433	4348	4006	5419	7348
455	1995	9490	1002	4583	1903	0695	9105	6675	9853	8560
456	7486	7617	4960	5009	9875	4046	2463	5190	0337	1009
457	6740	4125	1009	3464	5270	4471	9111	2489	0515	1710
458	2040	3384	2173	7430	7710	9138	9836	4218	4788	6353
459	7800	5776	7489	6166	9933	7387	1823	5741	7063	9422
460	5452	1798	7818	3843	3198	4116	9760	7388	4983	6146
461	2200	9082	1932	0727	4111	2410	7424	8087	4815	1699
462	1380	8104	6786	8552	3552	1648	4648	9452	5785	1241
463	8680	4358	2373	2783	4619	2527	0836	6785	0440	6401
464	1442	8608	9787	4313	9567	5835	5847	9018	8906	3386
465	6968	6542	4931	0323	0554	8831	8249	0884	9401	6952
466	7017	6936	0751	5273	9485	4538	3094	9626	9738	9804
467	7916	6025	2082	4194	9689	4313	8267	3151	2120	9043
468	4313	3979	1380	2564	0454	7942	7243	1338	7826	9340
469	2089	8835	2164	5938	8577	0985	0234	2946	2419	5892
470	0110	8951	0140	6090	1500	7194	0908	5051	5922	7749
471	1634	2255	6261	4023	9225	8815	4309	3774	2946	2517
472	5586	2457	2063	8645	0523	6201	7859	8115	0258	5695
473	0104	3562	6376	0844	7930	8418	9693	5009	9286	4414
474	2735	6851	1541	6615	8432	4800	7595	4895	8951	2809
475	4918	5473	2964	7280	2406	3790	3510	2381	5010	6320
476	4472	6105	3805	3445	8048	1078	8687	7530	4655	9307
477	7816	2237	8693	7775	7897	6151	9126	4346	5236	7570
478	4887	4977	7314	2769	2370	9663	9521	7514	5813	9469
479	1139	7560	1276	5646	3261	8693	3199	6530	2934	0526
480	3444	8169	7650	6183	5108	4653	5072	3348	3792	5971
481	8104	6577	1738	8790	4278	4361	0730	1096	4115	5109
482	2371	2964	2888	3142	9540	2366	0706	1236	0671	1067
483	0999	1401	4609	0833	8450	5466	3812	2756	7902	0033
484	7795	3205	8089	6436	9586	4275	2515	7261	0958	0312
485	4848	3403	1042	3406	0964	5409	5612	8689	6122	7344
486	9440	0676	9834	6449	4216	9188	6150	8022	3893	8890
487	7111	1014	8160	5340	3426	0695	1038	3751	4974	1411
488	8938	4688	2284	0285	4845	8425	4891	2736	7926	3523
489	6950	5210	1565	0431	9641	4016	4505	2629	0111	4095
490	4622	6658	6572	3213	6579	5854	9445	2878	3584	2564
491	6744	0048	1861	2664	0433	4286	8231	6419	5599	9079
492	5695	8530	1924	6177	8870	4822	9070	6201	6412	7507
493	6966	3987	6009	2936	4683	1084	9613	7013	6260	2609
494	7066	8247	9253	8223	0395	5403	2097	7574	5642	0500
495	9895	7280	6024	4505	0338	0706	8514	0659	5178	4059
496	3081	0287	4712	5215	7088	7707	0787	7815	7176	7655
497	2725	3254	8246	4645	9448	7622	0063	9307	9870	2843
498	7315	0408	0976	3714	3932	9194	6425	6438	0639	0028
499	5270	0138	2015	7250	0504	5008	2431	8394	1859	7517
500	6729	4405	0043	5901	9227	5824	5584	1345	9856	2515

10.4 DENSITY GAUGE QUALITY CONTROL (QC)

10.4.1 Density Gauge QC Procedures - General

Density gauge control procedures shall be in accordance with the Department's most current HMA/QMS Density Gauge Operator's Manual. This manual may be obtained through the Department's Materials and Tests Soils Laboratory. The Contractor shall furnish, maintain, and operate the density gauge. The density gauge shall have been calibrated within the previous 12 months by a calibration service approved by NCDOT. The Contractor shall maintain documentation of such calibration service for a 12 month period.

The gauge operator shall be certified by the Department. The QC Certified Density Gauge Operator, although possibly QMS Roadway Certified, will not be allowed to fulfill the requirement for a certified QMS Roadway Technician to be present with each paving operation. The certified QMS Roadway Technician present with each paving operation is responsible for monitoring all paving operations and directly supervising all quality control processes and activities. The density gauge operator will not be able to function in this capacity and properly perform the activities associated with density gauge control.

All density gauge readings taken for either density acceptance or establishment of a target density in a control strip must be recorded and stored in gauge memory for printing. All density gauge readings must be marked on the pavement by tracing the “foot print” of the device. If an area is re-rolled, the test site must be re-tested and a comment placed on the test report as to the reason. Any repeated moving of the gauge to “cherry pick” or find a passing density result or core site is a direct violation of testing procedures and shall be deemed as falsification. For resurfacing projects where the condition of the existing pavement may influence the density results, it is recommended that the Contractor and Engineer simultaneously evaluate the existing pavement prior to the placement of a new asphalt mix. The information recorded from the evaluation can aid in the final acceptance process.

10.4.2 Location of QC Density Gauge Control Strips

It is the contractor's responsibility to determine roller patterns and establish acceptable control strips at locations approved by the Engineer. The Contractor shall notify the Department’s Roadway Inspector sufficiently in advance of the placement of control strips to allow establishment of QA target density and to witness the QC technician’s Standard Count Procedure. The subgrade, base or existing roadway material on which the control strip is constructed must be representative of the majority of the material on which test-sections will be constructed.

10.4.3 Frequency of QC Density Gauge Control Strips

A control strip shall be placed within the first density gauge test section of each job mix formula on a contract provided sufficient mix is produced to construct a 300 foot control strip. After the initial control strip on each job mix formula is placed, a control strip shall be placed at a minimum of once every 14 calendar days for each contract, unless otherwise approved by the Engineer. A control strip placed for any of the below listed reasons will suffice for this 14 calendar day requirement.

1. Control strips shall be placed anytime one or more of the following JMF changes are made:
   a. Any percentage change in total binder content
   b. An aggregate blend change in excess of 10%
   c. Any change in the G_{mb} or G_{mm} on the JMF
2. Control strips shall be placed for each layer of mix.
3. Control strips shall be placed anytime the underlying surface changes significantly.

4. Control strips shall be placed for different layer thickness of the same mix type when the specified thickness varies more than ± 1/2 inch (12.5 mm).
5. Control strips shall be placed anytime the Contractor is proceeding on a limited production basis due to failing densities.
6. Control strips shall be placed anytime a new, re-calibrated, or different density gauge is used.
7. Control strips shall be placed when different plants are being used.
8. The Engineer may require control strips anytime, as deemed necessary.

NOTE: Density gauge control strips are used to determine a target density. They are not for lot acceptance, unless a control strip was placed due to limited production.

10.4.4 <u>Numbering of Density Gauge Control Strips</u>

Control strips for a given contract shall be numbered consecutively by mix type, regardless of plant furnishing mix. However, if a control strip is constructed from mix out of a second plant, the control strip number will be followed by the suffix A; if out of a third plant then the control strip number would be followed by a suffix B, etc.

For example: 1st plant Control Strip would be 1, 2, 3; 2nd plant Control Strip would be 4A, 5A, 6A; 3rd plant Control Strip would be 7B, 8B, etc.

Each type mix will have a separate series of control strip numbers. Recycled mixes will not be considered a different type mix and will carry the same series of consecutive numbers. Both passing and failing control strips will be numbered and reported to the Engineer.

If a secondary gauge is used on a control strip for back-up purposes, the secondary gauge control strip will be numbered with the same numbers as used for the primary gauge except that it will be followed by the suffix "S".

10.4.5 <u>Construction of Density Gauge Control Strips (QC Procedures)</u>

To establish a control strip, asphalt shall be placed on a section of roadway approximately 300 feet (100 meters) in length. The width shall be equal to the lay-down width of the paver. The material should be of a depth equivalent to the layer depth shown in the plans or required by the Specifications. The Engineer may determine that the travel lane control strip is representative of the shoulders and that the control strip may be used to determine the required density for the shoulders. If shoulder control strips are constructed, they should be constructed to the full shoulder width and the depth shown on the plans.

Since the control strip will assist in establishing the correct rolling pattern to obtain the specified density, it is important that the compaction equipment used on the control strip is operating properly and is capable of compacting the material. It is preferred that the same equipment used to compact the control strip be used to compact the pavement represented by the control strip. Reference should be made to the applicable sections of the Specifications for minimum equipment requirements and rolling procedures.

In order to achieve a complete and uniform coverage, the compactive effort shall consist of roller passes made over the entire control strip surface. The contractor will be responsible for carrying out the compaction operation in such a manner as to obtain the required density uniformly over the entire control strip.

In order to assure complete and uniform coverage, the compactive effort shall consist of individual roller passes made over the entire control strip surface. Each coverage should be completed before beginning the next. The density gauge operator should observe and monitor with the gauge the rolling

operation to insure that the control strip is rolled uniformly. The random locations of core samples from the control strip will not be marked on the pavement until rolling of the control strip has been satisfactorily completed.

10.4.6 Core Samples From Density Gauge Control Strips (See Figure 10-10)

Five (5) core samples shall be taken in a control strip.

Core samples in the control strip shall be placed a distance of 50 feet (15 meters) apart.

Core samples shall be located at random locations across the width of the mat. Use Table 10-4 of this manual and Form QC-5 Rev.

NOTE: The results of the cored samples and their average will be reported at the top of M&T Form 514 QA/QC (See Figure 10-11) and QC-5 (Revised) (See Figure 10-19). See Section 10.6.3 for procedures for numbering core samples within a control strip.

10.4.7 Determination of QC Density Gauge Control Strip Target Density

Before establishing the QC target density, the QA Roadway Inspector and/or the QA density gauge operator will witness the Standard Count procedure for the QC density gauge(s). Likewise, the QC density gauge technician will witness the Standard Count procedure for QA density gauges. If the standard counts pass, these Standard Counts will be recorded on the M&T 514 QA/QC form. It is not necessary to perform another daily standard count specifically for a control strip, so long as the Department witnessed the QC standard count that day and the materials, and underlying base have not changed.

After the Contractor has completed compaction of the control strip, the QC Density Gauge Operator will conduct 10 density gauge tests, 2 each at 5 random core locations in the control strip. The cores shall be taken from the control strip the same day the mat is placed. The density gauge readings shall be performed at a distance of not more than 1 foot from the center of the gauge to the center of the control strip cores. The surface of the material being tested shall be smooth prior to any tests being performed. The results of the 10 tests will be averaged and the resulting average density will be used in determining the target density for all test sections being constructed in conjunction with a particular control strip. The target density will be determined by dividing the average density by the average percent compaction of the 5 core samples from the control strip. Test section densities will be expressed as a percentage of the target density. (See Figure 10-14)

When testing with a non-nuclear gauge, the gauge operator will conduct twenty-five (25) non-nuclear gauge density tests, five (5) readings at each of the five (5) random core locations within the control strip.

The final density of the control strip shall be at least equal to the minimum density specified for that particular mix type, based on the average maximum specific gravity (G_{mm}). In addition to determining the gauge target density, the following procedures and tests will be performed to assure that the final density of the control strip meets the minimum density requirements:

1. Prior to opening the control strip area to traffic or no later than the beginning of the next day following the completion of the **density gauge** control strip, the Contractor will core 5 samples from the control strip. The density of each cored sample will be determined in the QC field laboratory. Artificial cooling of the pavement layers by the Contractor is suggested and will be permitted in order to obtain the target density as quickly as possible. No compensation will be made for the cost of artificial cooling. Cored samples shall be taken in accordance with Article 609-7 of the Specifications.

2. During the time between the completion of control strip and the determination of the density of the cored samples, the Contractor will be permitted to continue to place pavement which will be evaluated on the basis of a target density determined by multiplying the unit weight of water (62.4 pcf) by the maximum specific gravity of the mix, which was determined at mix verification. Evaluation of the test sections during this time period will be based on this calculated target density, provided that all other specification requirements are met. Once an acceptable correlated target is established, all previous test section densities shall be recalculated using this correlated target. Should the Contractor elect to produce a different mix design of the same mix type, all of the previous mix in question that has not been tested with a correlated target density will be accepted based on the calculated target unless the Contractor elects to cut density acceptance cores.
3. If the average density of the 5 cored samples is equal to or greater than the minimum density specified for the mix, the control strip is considered valid and paving may continue in the normal manner.
4. If the average density of the 5 cored samples fails to meet the minimum density specified for the mix the control strip will be considered unacceptable. Immediately construct a new control strip in accordance with the provisions of Items 1 through 3 above.
5. If the second control strip also fails to meet the minimum density specified for the mix, placing of pavement shall proceed on a limited production basis as defined under "LIMITED PRODUCTION PROCEDURES" in Section 10-9 of this manual.
6. Check samples may be taken for density gauge control strip core samples but must be in accordance with Article 609-7 of the Specifications, (Section 10.6.10). Specifically, if the control strip fails and a core(s) sample is more than 2% below the average of the 5 cores, check samples may be taken. If check core samples are taken, 2 density gauge readings must be taken at each of the 3 check sample core sites. The gauge readings taken on the left side of each check core will be averaged and will replace the left gauge reading taken at the original core site. The same procedure will be followed for the gauge readings taken on the right. The results from the 3 check cores and 6 gauge readings will be used to calculate the target density. A new target density will then be determined using the new core sample average and the new average of the gauge readings. This process should be completed as soon as possible after the initial determination of a target density since it is the controlling factor in checking density thereafter.

   If using a non-nuclear gauge for density acceptance testing, 5 gauge readings will be taken at each of the 3 check sample core sites. The non-nuclear gauge measurements taken at each check core site will replace the original core site measurements. The results from the 3 check cores and 15 non-nuclear gauge readings will be used to calculate the target density.
7. Once a correlated target density is established, it will be used thereafter to determine density acceptance until a new acceptable target is obtained for that mix. For 14 calendar day control strips, the previously established target density will be utilized to determine density compliance for all test sections placed the day when the new control strip is constructed. Once the density results of the cored samples from the new control strip are determined and a new acceptable target density established, the new target will be used thereafter until another 14 calendar day control strip is required, at which time this process is repeated.

8. When more than 14 calendar days has passed since the last passing control strip has been established, use the procedures for obtaining a new correlated target, as detailed in items 1-7 above except the maximum specific gravity moving average will be utilized to determine the calculated target.

QC/QA Density Gauge Control Strip Procedure

5 Core Samples placed at 50' (15m) intervals, 2 nuclear gauge readings (10 gauge readings) OR 5 non-nuclear gauge readings (25 readings) @ each of the core locations will be taken within the control strip.

All density gauge operators (QC/QA) shall be certified by the NCDOT.

QC gauge operator shall confirm with the DOT Roadway Inspector on when and where the control strips will be placed.

The DOT Roadway Inspector shall inform the QA Supervisor and/or the QA gauge operator of the control strip placement.

The QA Roadway Inspector and/or the QA Nuclear gauge operator will witness the Standard Count procedure for the QC nuclear gauge(s). Likewise, the QC Nuclear gauge technician will witness the Standard County procedure for QA nuclear gauges. These Standard Counts will be recorded on the M&T 514QA/QC form.

Two nuclear gauge readings OR 5 non-nuclear gauge readings will be taken at each core sample site directly on top of the core site. The density gauge readings shall be compared to the core sample results and a nuclear target density shall be determined using the M&T 514 QA/QC form.

QA Personnel will establish their own target density from control strip results, if possible. If it is not possible to take QA readings from the control strip, the QA target density will be determined by multiplying the Maximum Specific Gravity (G_{mm}) times 62.4 lbs/ft^3 (1000 kg/m^3).

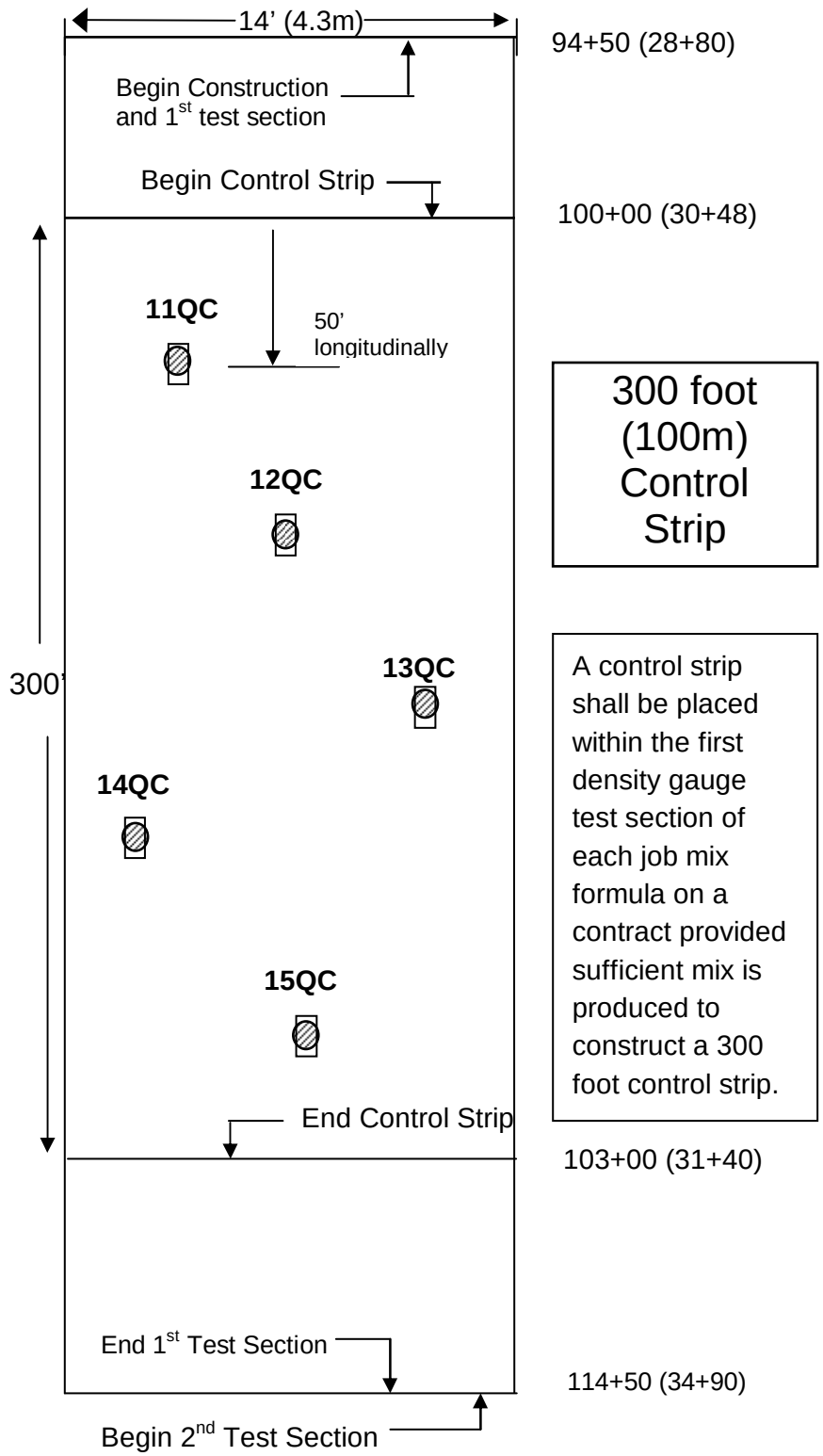

= QC and/or QA density gauge reading

= Core Sample (5 cores per control strip)

Figure 10-10

M & T - 514QA/QC
Rev. 10/08

NORTH CAROLINA DEPARTMENT OF TRANSPORTATION
DIVISION OF HIGHWAYS
CONTROL STRIP DENSITY

Date 9-15-2008

Contract / Project No. 9.87654321 County Brunswick Control Strip No. 3 QC

From Sta. 100 + 00 to Sta. 103 + 00 Lane NBL Rt.

Layer 1st Depth 3.5" Width 14' Route US 117 Job Mix Formula 07-503-151

Gauge Serial No. 2213 Material

STANDARD COUNTS					ASPHALT CORE SAMPLES			
Density					Core No.	Sta.	%Compaction	
6152					11 QC	100+50	93.4	%
2212					12 QC	101+	93.1	%
Allowable Standard Count Range					13 QC	101+	93.6	%
6214	+1.0%	System 1	- 1.0%	6090	14 QC	102+00	94.0	%
2239	+1.2%	System 2	- 1.2%	2185	15 QC	102+50	93.5	%
						Avg. % Compaction	93.5	% (A)

Test	Station	ASPHALT (Wet Density)
1	100 + 50 ⑤	142.8
2	"	143.7
3	101 + 00 ⑧	144.2
4	"	139.9
5	101 + 50 ⑩	141.5
6	"	142.6
7	102 + 00 ②	143.0
8	"	142.5
9	102 + 50 ⑦	140.9
10	"	141.5
	AVG.(PCF)	142.3 (B)

ASPHALT TARGET DENSITY

Average of Control Strip (PCF) + Average of Cores (B+A) 100 = 152.2 Target Density (PCF)

	A = Core Sample Average		B = Average PCF of Control Strip	

cc: *Resident Engineer [White] *QA Copy Only
QA/QC Technician [Gold]
Soils Engineer [Pink]

Print Name Legibly w/ HiCAMS #: I. R. Nuke (NDT 5159)

QA/QC Technician Signature: I R Nuke

NOTE: By providing this data under my signature and/or HiCAMS certification number, I attest to the accuracy and validity of the data contained on this form and certify that no deliberate misrepresentation of test results, in any manner, has occurred.

Figure 10-11

10.4.8 <u>Establishment of QC Density Gauge Test Sections</u>:

Any pavement placed which requires density testing in accordance with Article 609-7 and Section 10.3.2 of this manual will be divided into test sections for density testing. As detailed in the Specifications, the test sections shall be 2000 linear feet (600 linear meters), or fraction thereof per day, of the paver laydown width, except for intersections as noted below. Do not divide full test sections consisting of 2000 LF, unless otherwise approved by the Engineer. As an exception, when a day's production is less than 6,000 linear feet of laydown width, the total length paved may be divided into 3 equal test sections, provided that density gauge testing has not already occurred. If the fraction remaining is less than 100 linear feet, it is recommended that the density be represented by the results of the previous section provided approved compaction equipment and procedures are used. If the remaining fraction is 100 linear feet or more it will be considered a separate test section and shall be accordingly sampled and tested. See Section 10.3.3 for "lot" definition and density acceptance.

The material used in a test section shall be the same type as the material used in the applicable control strip and shall be from the same source. The depth of a test section shall be equal (±1/2 inch) to that of the control strip previously constructed for use with the test section involved except in cases where roadway control strips are used to determine required density for shoulder material.

Full width travel lanes of uniform thickness within intersections are subject to density testing. For this purpose, an intersection shall terminate at the end of the radii or 50 ft. from the edge of the mainline pavement, whichever is greater. Testing full width travel lanes in an intersection will be performed by using the correlated target density established on the mainline pavement. All combined intersection travel lanes paved during a day's production shall be considered a test section for testing purposes and a lot for acceptance purposes. Each lot established for intersections shall have 5 randomly selected density test sites. The 5 randomly selected density test sites will be determined by dividing the total length of intersection lanes by 5 to generate equal test increments. The next 5 sequential random numbers from Table 10-4 will be multiplied times these test increment lengths to determine the locations of the 5 test sites. One of the intersections shall be designated as the beginning station in order to have a starting point.

A specified density will not be required for irregular areas within an intersection provided the pavement is compacted using approved equipment and procedures. The Engineer may require occasional density sampling and testing within irregular areas to evaluate the compaction process. See Section 10.3.4 for the compaction of irregular areas located within an intersection.

10.4.9 <u>Testing a QC Density Gauge Test Section</u>:

Before testing begins with a nuclear gauge, the daily standard count should be compared to the standard count used to construct the active control strip. The daily standard count should be within the allowable Standard Count Range. The upper range limit is calculated by taking the standard count used for the construction of the active control strip and adding 1% for System 1 and 1.2% for System 2. Likewise, the lower range limit is calculated by subtracting 1% for System 1 and subtracting 1.2% for System 2 from the standard count used to construct the active control strip. This allowable range is computed and recorded on the M&T 514 QA/QC form.

As long as the daily standard count passes the system 1 and system 2 requirements of the gauge and is within the allowable Standard Count Range for the active control strip, testing may be performed. However, if either the daily standard count does not pass the system 1 and system 2 requirements, or if the standard count is outside of the allowable Standard Count Range from the active control strip, then another standard count must be taken until it passes these criterion. Once the daily standard count is accepted, nuclear testing may begin.

Before testing begins with a Pavetracker, a Reference Reading must be taken to ensure the device is measuring the Reference Standard within ±0.5 pcf of the actual density stamped on the Reference Standard. During the days production additional density measurements should be taken on the Reference Standard to ensure the Pavetracker is within tolerance. If the result indicates the device is not within tolerance perform another Reference Reading.

Before testing begins with a PQI device, ensure a monthly Test Block Procedure has been performed as stated in the "PQI Model 300 & 301 Test Block Procedure" manual and the results of the Procedure are within tolerances. This Procedure should be conducted if the PQI density results are questionable. Records of this Procedure should be maintained for verification.

If a non-nuclear gauge is being used 5 density measurements will be taken at each test site and the average of the five readings will determine the density for that particular test site. Refer to Figure 8 in the latest QMS Density Gauge Operator's manual for the testing pattern of a PQI 301 gauge and Figure 9 for the testing pattern of a Pavetracker Plus 2701B gauge. The results shall be in % compaction, tabulated on Test Section Density Form M&T 516QC and the five test sites averaged.

Each test section, regardless of length, shall be divided into 5 equal increments with one gauge reading being performed in each increment. In addition, for any day's production, each lot shall have a minimum of (5) five nuclear gauge readings. The location of the test within the segment will be established randomly. See the random sampling instruction in the NCDOT QMS Density Gauge Operator's Manual.

Once random locations have been determined, a density gauge reading will be taken at each location. The results shall be recorded in percent compaction, tabulated on Test Section Density summary Form M&T 516QC, and the 5 test locations averaged. (Figure 10-14)

The following procedures shall apply to test sections which are tested using a target density established from any control strip other than one placed every 14 calendar days for verification purposes. The first test section will begin with the first load of mix for that day's production. On the day the control strip, is placed the QC and QA density gauge operator(s) will use a calculated target density to aid them in determining if an adequate compaction process is occurring. See Section 10.4.7 for calculated target density. This calculated target density will be used to monitor the density until an acceptable correlated target density is determined. Once an acceptable correlated target is established, all previous test section densities shall be recalculated using this correlated target, since the correlated target is considered to be more accurate than the calculated target density. Report both the original and re-calculated density results on form M&T 516-QC. The recalculated densities of these test sections shall be used to determine density compliance and acceptance. The correlated density results (not the original results) will be entered into HiCAMS. The correlated target density from this control strip will also be used for all test sections that follow until the next acceptable target density is established, in accordance with Section 10.4.7 of this manual. **If for any reason there is not a correlated target density established for mix that is placed and compacted, that mix will be tested and accepted based on the calculated target unless the Contractor elects to cut density acceptance cores.**

If a correlated target density is not used within 17 calendar days, the contractor will use a calculated target density based on the current moving average of the maximum specific gravity for that mix type to evaluate test sections until an acceptable correlated target has been established. The density results based on the calculated target will be recalculated once a control strip has been constructed and an acceptable correlated target is established.

10.4.10 Procedures for Re-testing a QC Density Gauge Test Section

When nuclear or non-nuclear control is being utilized and a test section is more than 2.0 percent below the lot average, the Contractor may elect to re-test that test section.

All re-testing shall be performed in the presence of a representative of the Engineer. The re-testing of test sections must be performed within 2 calendar days of the date of the initial sample. A test section will only be retested once. In addition, QA comparison nuclear or non-nuclear density readings may be taken at all locations.

Re-testing of test sections will be performed as follows:

1.) 5 new random test sites will be determined jointly with a representative of the Engineer.
2.) All re-test readings must be stored and printed.
3.) The average of these 5 new readings will replace the initial test section results.
4.) The lot average will be recalculated.

Determining Number of Test Sections
Nuclear / Non-Nuclear Density Control

- Contractor's Responsibility, subject to DOT roadway technician's concurrence.
- Done daily to assure the minimum testing frequency is being met.
- Contractor must advise the Roadway Inspector.
- Approved Gauge Operator on project during laydown procedures.

All test sections using Density Gauge Control for density will be a maximum of 2000 feet (600 m) or fraction thereof per day.

All test sections, regardless of length will have 5 random nuclear gauge readings taken. (25 Non-Nuclear readings – 5 readings / test site)
It is recommended that pavement less than 100 ft. at the end of the last full test section be evaluated based on the last full test section results.

In addition, any day's production shall have a minimum of 5 gauge readings.

6900 Linear feet. (2070 m)
10 feet wide (3 m)
6900 ÷ 2000 Equals 3.45
4 test sections minimum

2070m ÷ 600m = 3.45
4 test sections minimum

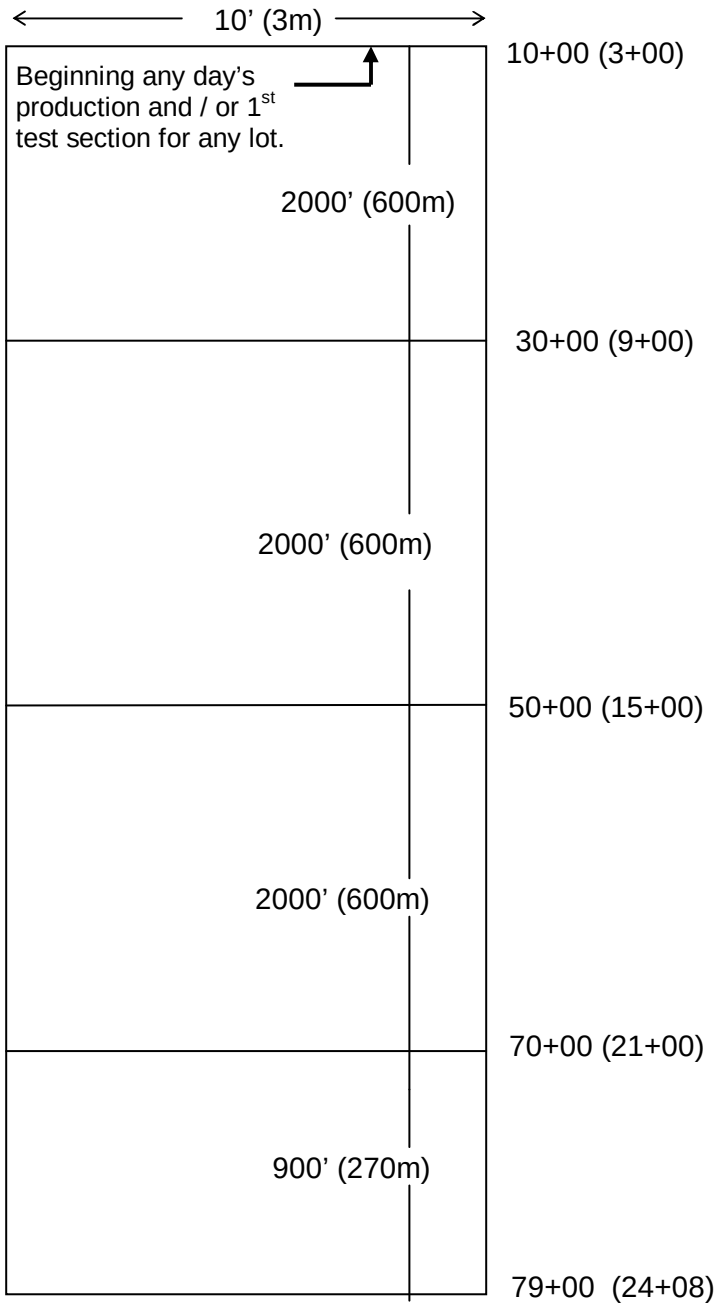

Figure 10-12

10.4.11 Numbering QC Density Gauge Test Sections:

Density Gauge control test sections will have a separate series of numbers for each mix type, per paving operation, for each contract. Test sections for a given contract shall be numbered consecutively by type mix, regardless of plant furnishing mix. When the Contractor has more than one crew placing the same mix on the same project, the test section numbering will run consecutively with the addition of an alphabetical designation behind it.

For example: Crew #1 will number test sections 1, 2, 3, etc
Crew #2 will number test sections 1A, 2A, 3A, etc.
Crew #3 will number test sections 1B, 2B, 3B, etc.

10.4.12 Reporting QC Density Gauge Test Sections (M&T 516 QC)

Once random locations have been determined, a gauge reading will be taken at each location. Sample locations, sample results in percent compaction, lot average, and other appropriate information shall be recorded on Nuclear Density Test Section Summary Form M&T 516QC by the Contractor's Density Gauge Control Technician. (See Fig. 10-13) The results shall be recorded in percent compaction, tabulated on the form, and the 5 test locations averaged. Once the compaction results are determined, the form is distributed as follows: the gold copy is retained by QC density technician; one copy (white) is furnished to the DOT's Roadway Technician, attached to the daily roadway report (M&T 605) and forwarded to the Resident Engineer.

North Carolina Department of Transportation
Division of Highways
Density Gauge Test Section

M&T – 516 QC
Rev. 11/11

Contract/Project No. _____Date_____ Division_____ Crew No. _____Control Strip No. _____

Map/Route No. _____ Contractor _____ J.M.F. _____- _____ -_____ Type Material _____

Layer _____ Gauge Serial No._____ Standard Counts (nuclear gauge only) Sys1_____Sys2 _____

Core Sample Avg. _____% Avg. of gauge readings _____PCF Correlated Target Density _____PCF

Interim Density Calculated Target: 62.4 PCF x _____ = _____Calculated Target PCF
Gmm

Test Sect. No.		Begin Sta.		End Sta.		Length:		/5 =		Increments
Random No.		Increments		Random (calc.)		Test Site Location			Density Readings	
Length	Width	Length	Width	Length	Width	Station	Offset	Lane	PCF	%
A	B	C	D	A x C =	B x D =	------	-----	-----	------	-------
Comments:								Test Section Average		Pass / Fail

Test Sect. No.		Begin Sta.		End Sta.		Length:		/5 =		Increments
Random No.		Increments		Random (calc.)		Test Site Location			Density Readings	
Length	Width	Length	Width	Length	Width	Station	Offset	Lane	PCF	%
A	B	C	D	A x C =	B x D =	------	-----	-----	------	-------
Comments:								Test Section Average		Pass / Fail

Test Sect. No.		Begin Sta.		End Sta.		Length:		/5 =		Increments
Random No.		Increments		Random (calc.)		Test Site Location			Density Readings	
Length	Width	Length	Width	Length	Width	Station	Offset	Lane	PCF	%
A	B	C	D	A x C =	B x D =	------	-----	-----	------	-------
Comments:								Test Section Average		Pass / Fail

At end of production for the day, calculate lot average by averaging test section results: Daily Lot Average _____ % Pass / Fail

*Print Name Legibly w/HiCAMs No. _____

*QC Technician Signature: _____

Note: (1) All failing lots must be documented by Resident Engineer on the QA-2B form. Contractor must be notified by letter of any pay adjustment or pavement removal.

***By providing this data under my signature and/or HiCAMs certification number, I attest to the accuracy and validity of the data contained on this form and certify that no deliberate misrepresentation of test results, in any manner, has occurred.**

Figure 10-13

10.5 DENSITY GAUGE QUALITY ASSURANCE (QA)

10.5.1 General

Quality Assurance is a process of sampling and testing the Contractor's product and monitoring his operations to confirm that the Quality Control results are adequate and accurate. This process is normally performed by Department personnel.

Quality Assurance testing shall be accomplished in the following ways:

1) By retesting 100% of quality control core samples from control strips (either core, nuclear, or non-nuclear);
2) By observing the Contractor perform the standard count procedure for the Quality Control nuclear gauge prior establishing a nuclear density control strip;
3) Conducting verification sampling and testing on nuclear or non-nuclear test sections independently of the Contractor's quality control test sections at a frequency equal to or greater than 10% of the required QC sampling and testing frequency;
4) Retesting randomly selected quality control nuclear or non-nuclear test sections at a frequency equal to or greater than 5% of the required Quality Control nuclear sampling and testing frequency;
5) Periodically requiring the Contractor to re-test marked test site(s) in the presence of a certified QA density gauge operator;
6) Periodically observing tests performed by the Contractor;
7) By periodically directing the recalculation of random numbers for the Quality Control density gauge test locations. The original QC test locations may be tested by QA and evaluated as verification tests; or
8) Witnessing the Pavetracker 2701B Reference Count;
9) Requesting the QC to take a reading on the Reference Block to verify Pavetracker is measuring correctly;
10) Witnessing the monthly PQI "Test Block Procedure" and/or verifying if results from the previous "Test Block Procedure" are within tolerences (refer to latest edition of the "PQI Model 301 & 300 Test Block Procedure" manual)
11) Any combination of the above.

Results of all density quality assurance tests will be provided to the Contractor within 3 working days after the samples or tests have been obtained by the QA personnel.

Differences between the Contractor's quality control and the Department's quality assurance test results will be considered acceptable if within the following limits.

Test	Acceptable Limits of Precision	
Comparison of QC Density Gauge Test	± 2.0 %	(percent compaction)
QA Density Gauge Verification Test *	± 2.0 %	(percent compaction)
See Section 10.7 for Cores within the Density Gauge Control Strip		

*Note: Verification tests will be compared to QC results from the same test section

In the event test results are outside the above acceptable limits of precision or the quality assurance test results or verification test results fail to meet minimum specification requirements, the Engineer will immediately investigate the reason for the difference. If the potential for a pavement failure is present, the Engineer may suspend production as stated in Article 108-7 of the Standard Specifications while the investigation is in progress. The Engineer's investigation may include checking of the Contractor's testing equipment, comparison testing of other retained quality control samples, or additional core sample testing of the roadway pavement in question.

If additional core samples are necessary to resolve the difference, the Contractor shall core these samples at the direction of the Engineer and these will be tested jointly by the Contractor's quality control and Department's quality assurance personnel. If the reason for the difference cannot be determined, payment for the mix in question will be determined in accordance with Article 105-3 of the Standard Specifications. If the reason for the difference is determined to be an error or other discrepancy in the quality control test results, the applicable quality assurance test results or verification test results will be used to determine compliance with the Specification density requirements.

10.5.2 Quality Assurance (QA) Density Gauge Control Strip Procedures

There will be no separate QA Density Gauge Control Strips constructed, unless directed by the Engineer. The Engineer will monitor the construction of all QC Density Gauge control strips by having a representative present during construction of all control strips. On days when a control strip is being placed, the Department's QA technician must witness the QC technician's standard count procedure. The location of a nuclear control strip and the core samples within it will be determined by the Contractor subject to the Engineer's approval.

If density gauge control is used, the QA Density Gauge technician will, at all times possible, be present during construction of control strips and establish the QA target density using the Contractor's control strip and core samples. If for whatever reason, the Density Gauge Technician cannot determine a target by taking the 10 readings from a control strip, he may elect to determine a QA target density by use of the maximum specific gravity.

In this case, the target density will be determined by multiplying the maximum specific gravity (G_{mm}) from either the mix verification or the moving average, whichever is appropriate, by the unit weight of water (62.4 lbs/ft^3) (1,000 kg/m^3). (This method cannot be used when testing with a non-nuclear gauge. Non-nuclear gauges must be calibrated to the mix by establishing a target density from a control strip.)

The Quality Assurance gauge operator will conduct 10 nuclear density tests, 2 each at 5 core locations in the control strip. These tests shall be taken at the same locations which the contractor's gauge operator conducted his/her tests. The nuclear gauge readings shall be performed at a distance of not more than 1 foot from the center of the gauge to the center of the control strip cores. The results of the 10 tests will be averaged and the resulting average density will be used in determining the target density for all test sections being tested in conjunction with a particular control strip. When testing with a non-nuclear gauge, the QA gauge operator will conduct twenty-five (25) non-nuclear gauge density tests, five (5) readings at each of the five (5) random core locations within the control strip. The target density will be determined by dividing the average density by the average percent compaction of the 5 core samples from the QC control strip. The Engineer may elect to take QA comparison core samples adjacent to any or all QC core samples within a control strip.

Test section densities will be expressed as a percentage of the target density. The QA control strip shall have the same number as the QC control strip with the addition of the suffix QA.

10.5.3 Quality Assurance (QA) Density Gauge Test Section Procedures (Comparison/Re-test)

The Department's Quality Assurance Density Gauge Operator will randomly select quality control test sections for mainline and intersections at a frequency of 5% or more for Quality Assurance testing. The location of the test within each of the 5 equal segments will be at the same random QC test locations. The QA test sections will have the same base number as the QC test sections followed by the suffix QA. The QA test section number will be by mix type and by contract. The results shall be in percent, tabulated on test section density form M&T 515QA and the 5 test locations averaged (See Figure 10-14). The average of these 5 test locations must be within ± 2% of the average percent compaction of the 5 QC gauge readings (see "Limits of Precision" in Section 10.7).

10.5.4 Quality Assurance (QA) Density Gauge Test Section Procedures (Verification)

The verification requirement will be satisfied by the Department's Density Gauge operator assuring that at least 10% of the required number of Quality Control test sections are tested by determining a new set of random sample locations other than those used by the QC Density Gauge operator. All verification sample numbers and random locations will be documented in a field sample book by the QA Density Gauge operator. (See example log book Figure 10-16) These verification test sections will be in addition to the minimum 5% required comparison test sections. Verification cores will not be taken within a nuclear control strip.

QA Verification test sections will be numbered by the DOT Density Gauge operator. Verification test sections will be numbered by using the same base number as the QC test section followed by the suffix "V". i.e.: 1V, 5V,10V, etc. When the contractor has more than one paving crew on the same project the same day, using nuclear density control, verification samples will have he same base number as the QC test section followed by the suffix "V".

For example: If the QC test section number is 3A and nuclear verification sample is performed in that same test section the number will be 3AV, 9AV, 15AV, if a third crew is used 3BV, 9BV,15BV etc.

Documentation of these verification test sections will be on the appropriate QMS nuclear density forms. These forms shall be maintained in the project files by the Resident Engineer. In addition to the above, random cores will be taken monthly by the IA section of the Materials and Tests Unit, except on projects "open" to traffic, on which random control strip core samples will be picked up by IA for comparison testing by the Materials & Tests Unit.

North Carolina Department of Transportation
Division of Highways
Density Gauge Test Section

M&T – 515 QA
Rev. 11/11

Contract/Project No. _____Date_____ Division_____ Crew No. _____Control Strip No. _____

Map/Route No. _____ Contractor _____ J.M.F. _____- _____ -_____ Type Material _____

Layer _____ Gauge Serial No._____ Standard Counts (nuclear gauge only) Sys1_____Sys2 _____

Core Sample Avg. _____% Avg. of gauge readings _____PCF Correlated Target Density _____PCF

Interim Density Calculated Target: 62.4 PCF x _____ = _____Calculated Target PCF
Gmm

Test Sect. No.		Begin Sta.		End Sta.		Length:		/5 =		Increments
Random No.		Increments		Random (calc.)		Test Site Location			Density Readings	
Length	Width	Length	Width	Length	Width	Station	Offset	Lane	PCF	%
A	B	C	D	A x C =	B x D =	------	-----	-----	------	-------
Comments:								Test Section Average (%)		Pass / Fail
								QC Test Average (%)		Within Limits of Precision: Yes / No

Test Sect. No.		Begin Sta.		End Sta.		Length:		/5 =		Increments
Random No.		Increments		Random (calc.)		Test Site Location			Density Readings	
Length	Width	Length	Width	Length	Width	Station	Offset	Lane	PCF	%
A	B	C	D	A x C =	B x D =	------	-----	-----	------	-------
Comments:								Test Section Average (%)		Pass / Fail
								QC Test Average (%)		Within Limits of Precision: Yes / No

*Print Name Legibly w/HiCAMs No. _____

*QA Technician Signature: _____

***By providing this data under my signature and/or HiCAMs certification number, I attest to the accuracy and validity of the data contained on this form and certify that no deliberate misrepresentation of test results, in any manner, has occurred.**

cc: Resident Engineer [White]
QA Technician [Gold]

Figure 10-14

EXAMPLE QA DENSITY SAMPLE FIELD LOG BOOK

QA VERIFICATION CORE SAMPLE LOCATIONS

TS NO.	STA	STA	LENGTH	RAND.NO.	CORE LOCATION	WIDTH	RAND. NO.	DIST.FROM BASELINE	%COMP	DATE	TECH. INITIALS
4V	15+00	35+00	2000	0.81	16+20	12	0.21	3	92.6	11/15/2004	RHD
2V	60+00	80+00	2000	0.41	68+20	12	0.85	10	93.4	11/23/2004	RHD
5V	97+75	117+75	2000	0.74	112+55	12	0.23	3	93.7	11/30/2004	RHD

QA NUCLEAR VERIFICATION SAMPLE LOCATIONS

TS NO.	STA	STA	LENGTH	RAND.NO.	LOCATION	WIDTH	RAND. NO.	DIST.FROM BASELINE	%COMP.	DATE	TECH. INITIALS
3V	15+00	19+00	400	0.81	18+24	12	0.21	3	92.6	9/22/2004	RHD
	19+00	23+00	400	0.41	19+64	12	0.85	10	93.4	9/22/2004	RHD
	23+00	27+00	400	0.74	25+96	12	0.23	3	91.3	9/22/2004	RHD
	27+00	31+00	400	0.91	30+76	12	0.53	3	92.1	9/22/2004	RHD
	31+00	35+00	400	0.16	31+64	12	0.17	3	93.9	9/22/2004	RHD
TS AVER.									92.7	9/22/2004	RHD

QA COMPARISON CORE SAMPLE LOCATIONS

TS NO.	STA	%COMP	DATE	TECH. INITIALS
4	15+00	92.6	11/15/2004	RHD
6	60+00	93.4	11/23/2004	RHD
1	125+50	92.6	12/1/2004	RHD

QA NUCLEAR RETEST SAMPLE LOCATIONS

TS NO.	STA	STA	LENGTH	RAND.NO.	LOCATION	WIDTH	RAND. NO.	DIST.FROM BASELINE	%COMP.	DATE	TECH. INITIALS

THIS WILL BE THE SAME AS THE CONTRACTOR'S STATIONS AND RANDOM LOCATIONS AS SHOWN ON THE GAUGE PRINTOUT

Figure 10-16

10.6 CORE SAMPLE DENSITY QUALITY CONTROL (QC)

10.6.1 Core Sample Density Control - General

Core sample density control procedures shall be in accordance with Section 609 of the Standard Specifications and this Manual. The Contractor is required to furnish a certified QMS Roadway Technician with each paving operation. The Technician present with each paving operation is responsible for monitoring all paving operations and directly supervising all quality control processes and activities related to that operation.

10.6.2 Core Sample QC Control Strip Requirements and Procedures

When core sample density control is being utilized, an initial control strip at the beginning of each JMF and contract is not required but is recommended for establishing rolling patterns to achieve the necessary compactive effort. Core sample control strips will be required if production and placement is being performed under limited production procedures due to failing densities. See "Limited Production Procedures" later in this section for details.

Frequency of Control Strips

1. Control strips are **only** required when the Contractor is proceeding on a limited production basis due to failing densities. Limited Production consists of a 300 ft. (100 meter) control strip plus 100 ft. (30 meter) of pavement at the beginning and end of the control strip. This 500 foot control strip is considered a separate lot.
2. In addition, the Engineer may require control strips anytime, as deemed necessary.

10.6.3 Numbering of Core Sample Control Strips and Core Samples

A. Control Strip

Control strips, if required, for a given contract shall be numbered consecutively by mix type, regardless of plant furnishing mix. However, if a control strip is constructed from mix out of a second plant, the control strip number will be followed by the suffix A; if out of a third plant then the control strip number would be followed by a suffix B, etc.

For example: 1st plant Control Strip would be 1, 2, 3; 2nd plant Control Strip would be 4A, 5A,6A; 3rd plant Control Strip would be 7B, 8B, etc.

Each type mix will have a separate series of control strip numbers. Recycled mixes will not be considered a different type mix and will carry the same series of consecutive numbers.

Both passing and failing control strips will be numbered and reported to the Engineer.

B. Control Strip Core Samples

QC Control Strip core samples will be numbered consecutively for each mix type being produced each day, except will carry a suffix of QC, regardless of the plant producing the mix. In addition to being marked with the number, the core sample should be marked with the date and mix type.

First Crew:

I 19.0B 1st Control Strip: 1QC, 2QC, 3QC, 4QC, 5QC;
2nd Control Strip: 6QC, 7QC, 8QC, 9QC, 10QC

S 9.5B 1st Control Strip: 1QC, 2QC, 3QC, 4QC, 5QC;
2nd Control Strip: 6QC, 7QC, 8QC, 9QC, 10QC

Second Crew:

I 19.0B 1st Control Strip: 1QCA, 2QCA, 3QCA, 4QCA, 5QCA;
2nd Control Strip: 6QCA, 7QCA, 8QCA, 9QCA, 10QCA

S 9.5B 1st Control Strip: 1QCA, 2QCA, 3QCA, 4QCA, 5QCA;
2nd Control Strip: 6QCA, 7QCA, 8QCA, 9QCA, 10QCA

If a third crew is used the consecutive numbers will continue with a suffix "B"

10.6.4 Construction of Core Sample Control Strips (QC Procedures)

To establish a control strip, asphalt shall be placed on a section of roadway approximately 300 feet (100 meters) in length. The width shall be equal to the lay-down width of the paver. The material should be of a depth equivalent to the layer depth shown in the plans or required by the Specifications. The Engineer may determine that the travel lane control strip is representative of the shoulders and that the control strip may be used to determine the required density for the shoulders. If shoulder control strips are constructed, they should be constructed to the full shoulder width and the depth shown on the plans.

Since the control strip will assist in establishing the correct rolling pattern to obtain the specified density, it is very important that the compaction equipment used on the control strip is operating properly. Reference should be made to the applicable sections of the Specifications for minimum equipment requirements.

In order to achieve a complete and uniform coverage, the compactive effort shall consist of roller passes made over the entire control strip surface. Breakdown rolling shall be performed at the maximum temperature at which the mix will support the rollers without moving horizontally. The breakdown roller should normally be operated with the drive wheel nearest the paver. The contractor will be responsible for carrying out the compaction operation in such a manner as to obtain the required density uniformly over the entire control strip. The compaction rolling shall be completed prior to the mixture cooling below a workable temperature.

To further assure complete and uniform coverage, the compactive effort shall consist of individual roller passes made over the entire control strip surface. Each coverage should be completed before beginning the next. The QMS Certified Roadway Technician should observe the rolling operation to ensure that the control strip is rolled uniformly.

Core Samples from Control Strips shall be taken as shown below: (See Figure 10-18)

1. A minimum of 5 core samples shall be placed in a control strip.
2. Core samples in the control strip shall be placed a distance of 50 feet (15 meters) apart.
3. Core samples shall be located at random across the width of the mat.

QC/QA Core Density Control Strip Procedure

5 Cores (5 random locations) will be taken within the 300' (100m) control strip.

The 5 Core Samples will be taken at 50' (15m) intervals **in the longitudinal direction and at random locations transversely across the width of the mat, but not less than one foot from the edge of pavement.**

Core Control strips will only be required when operating under limited production unless otherwise directed by the Engineer.

QC shall confirm with the QA Roadway Technician on when and where the control strips will be placed.

The 500 ft. of pavement that includes the control strip will be considered a lot. The average density of five control strip cores will be used as the density result for acceptance of that lot.

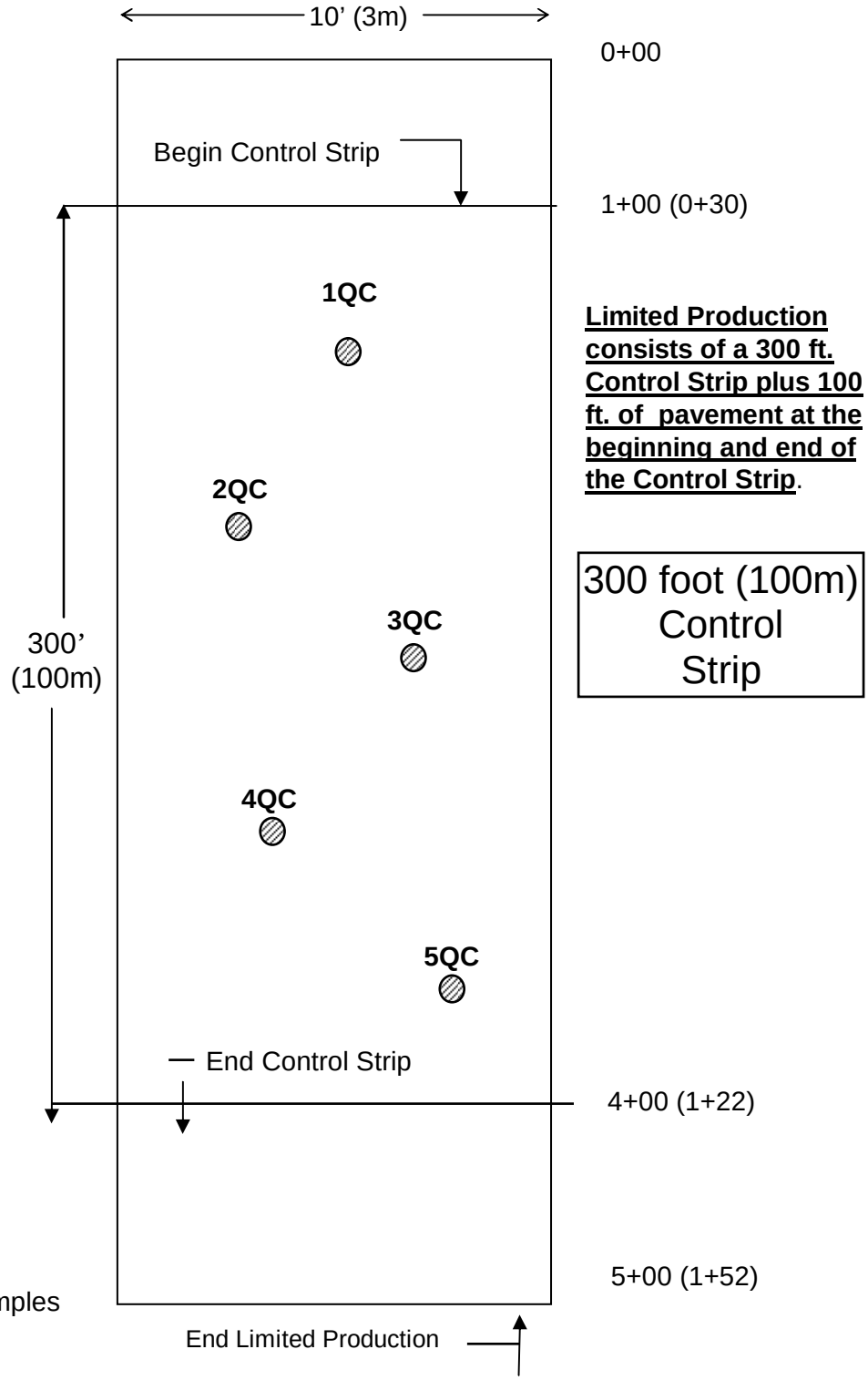

Figure 10-18

10.6.5 Determination of QC Core Sample Control Strip Density

As stated previously, core sample control strips are **only** required when the Contractor is proceeding on a limited production basis due to failing densities. After the Contractor has completed compaction of the control strip, cores samples will be obtained as outlined above. The bulk specific gravity of each core will be obtained and compared to the maximum specific gravity for the mix in accordance with Section 7.15 of this manual.

If the average density of the 5 core samples (G_{mb} / G_{mm}) is equal to or greater than the specified density for the mix, the control strip will be considered acceptable and paving may continue. If the average density of the 5 core samples (G_{mb} / G_{mm}) fails to meet the specified density of the mix, then a new control strip should be immediately constructed. If two control strips have been placed under limited production, as detailed in Article 609-7 of the Specifications, without achieving satisfactory density results, then the Contractor should cease production of that mix type until such time as the cause of the failing test results can be determined. Unless otherwise approved, the Contractor will not be allowed to produce this mix type on the contract until evidence is provided that density can be obtained.

10.6.6 Establishment of QC Core Sample Test Sections:

Any pavement placed which requires density testing in accordance with Article 609-7 and Section 10.3.2 of this manual, will be divided into test sections for density testing. As detailed in the Specifications, the test sections shall be 2000 linear feet (600 linear meters), or fraction thereof, of the paver laydown width, except for intersections as noted below. Do not divide full test sections consisting of 2000 LF, unless otherwise approved by the Engineer. As an exception, when a day's production is less than 6,000 linear feet of laydown width, the total length paved may be divided into 3 equal test sections, provided that core sample locations have not already been established.

If the fraction remaining is less than 100 linear feet, it is recommended that the density be represented by the results of the previous section provided approved compaction equipment and procedures are used. If the remaining fraction is 100 linear feet or more it will be considered a separate test section and shall be accordingly sampled and tested. See Section 10.3.3 for "lot" definition and density acceptance.

If a control strip is constructed to establish the rolling pattern, the material used in a test section should be the same type of material used in the applicable control strip and should be from the same source. The depth of a test section should be equal (±1/2 inch) to that of the control strip previously constructed for use with the test section involved except in cases where roadway control strips are used to determine required density for shoulder material.

Full width travel lanes of uniform thickness within intersections are subject to density testing. For this purpose, an intersection shall terminate at the end of the radii or 50 ft. from the edge of the mainline pavement, whichever is greater. All combined intersection travel lanes paved during a day's production shall be considered a test section for testing purposes and a lot for acceptance purposes. Each lot established for intersections shall have a minimum of 3 randomly selected density sites.

The 3 random test sites will be determined by dividing the total length of intersection lanes by 3 to generate 3 equal test sections. The next 3 sequential random numbers from Table 10-4 will be multiplied times this test section length to determine the 3 test site locations. One of the intersections shall be designated as the beginning station in order to have a starting point.

A specified density will not be required for irregular areas within an intersection provided the pavement is compacted using approved equipment and procedures. The Engineer may require occasional density sampling and testing within irregular areas to evaluate the compaction process. See Section 10.4.4 for the compaction of irregular areas located within an intersection.

Cored samples of the compacted pavement shall be taken at random locations from the full depth of the course. Form QC-5 shall be used to determine the random location of each core (See example in Section 10.6.7). The samples shall be taken no later than the beginning of the next production day, not to exceed 3 calendar days. The Contractor may elect to cool the pavement layers by artificial methods to allow cutting the core samples as quickly as possible. No compensation will be made for the costs of artificial cooling.

10.6.7 Determining Random Sample Locations for QC Core Sample Density Testing

Form QC-5 and tables of random numbers shall be used to randomly locate density test sites in order to avoid repetition. The following Random Sampling Procedures and Random Sample Number Tables shall be used to locate both density gauge and core sample locations within the normal density test sections. Control strip core samples are randomly located transversely, but not longitudinally since these are required to be spaced 50 feet apart within the control strip. The test section random sample locations shall be determined prior to beginning each test section and shall be documented on Form QC-5. The Contractor's QC technician should maintain a copy of this form and is also required to furnish a copy to the Department's QA roadway technician no later than the end of that production day. No other method of obtaining random numbers for the location of either type density samples is acceptable.

While the following procedures generally apply to determining random locations for either density gauge or core sample density control, the example given applies primarily to core sample control. The NCDOT Density Gauge Operator's Manual should be consulted for a detailed example of locating density gauge test sites.

Note 1 : The following example is in English units. If used on metric projects, stations and distances will be in metric units.

Note 2 : ASTM D-3665, Alternative 2, will be the only acceptable method used to produce random numbers for the QC-5 Form with the following stipulations. Random numbers in Table 10-4 are to be used to calculate density test locations and are to be used consecutively regardless of the mix type. The starting point will always be the upper left corner of the random number table and the progression will be down the numbers in that column. Once all five hundred numbers in a column have been used, the progression will be to the top of the next column and the process repeated. As random numbers are used from the table, each used random number shall be lined through (not obliterated) to show that they have been used. When ASTM D-3665, Alternative 2, is used, the following additional rules will also apply. The same random numbers table will be used for all mix types per calendar year. If all random numbers in TABLE 10-4 are used prior to the end of the calendar year, this process will begin anew and continue through the end of that same calendar year.

The following are step-by-step instructions of how to locate the random test sites for five test sections. A completed QC-5 form (Figure 10-19) containing this example follows these instructions.

Note: QC-5 form shall be completed by either the contractor's certified roadway technician or density gauge operator

1. Determine the test section length, control section length, or length in question and the number of sample locations required by referring to the appropriate specification or procedures. Each test section length is 2000 feet or portion thereof.

2. Determine the random sample numbers by referring to Table 10-4. Using the appropriate four digit random number that has been selected, place a decimal in front of the first two digits. Going down the column in the same manner, repeat this process using the next random sample numbers until the required number of locations has been determined. In the example shown below, refer to the first column of four digits, use the first two digits which are 81. By placing a decimal in front of these two digits, it becomes .81. Going down the column in the same manner, the next four random sample numbers are .41, .74, .91, and .16.

3. Multiply each random sample number by the length of the test sections determined in No. 1 above.
   In this example, a total of 9125 LF was paved. By dividing this length by 2000 it is determined that four full and one partial test sections are required for this length of paving.
   2000 LF X 4 full test sections = 8000 LFand 1125 LF(9125 LF total – 8000) for a partial test section.

Therefore:					
	2000	2000	2000	2000	1125
	x .81	x .41	x .74	x .91	x .16
	1620	820	1480	1820	180

4. Add the distances determined in No. 3 to the beginning stations of each test section.
   For this example, the beginning station of the 1st test section will be 0+00.

0+00	20+00	40+00	60+00	80+00
+ 16+20	+ 8+20	+ 14+80	+ 18+20	+ 1+80
16+20	28+20	54+80	78+20	81+80

5. Again referring to the same random sample numbers from Table 10-4 used in No. 2 above, determine a second set of random sample numbers to be used in determining distances from the reference edge of the test sections. To do this, place a decimal in front of the second two digits in each of the numbers and record. These random numbers become .21, .85, .23, .53, and .17.

6. Multiply each random sample number determined in No.5 by the width of the test section.
   Calculate to the nearest whole number. In this example, the width is 12 feet.

Therefore:					
	12	12	12	12	12
	x .21	x .85	x .23	x .53	x .17
	2.52 (3')	10.20 (10')	2.76 (3')	6.36 (6')	2.04 (2')

7. Record the stations and distances from the reference edge of each section on the appropriate form.
   In this example, the tests would be located at the following stations and would be recorded on the QC-5 Form.

NOTE 1: **No Test site should be located within one (1) foot of either edge of the test section.**

NOTE 2: **Once a random test site has been determined it shall not be moved unless it is within (1) foot of the edge of pavement.**

Summary of Test Site Locations

(1) Sta. 16+20, 3 feet from the reference edge
(2) Sta. 28+20, 10 feet from the reference edge
(3) Sta. 54+80, 3 feet from the reference edge
(4) Sta. 78+20, 6 feet from the reference edge
(5) Sta. 81+80, 2 feet from the reference edge

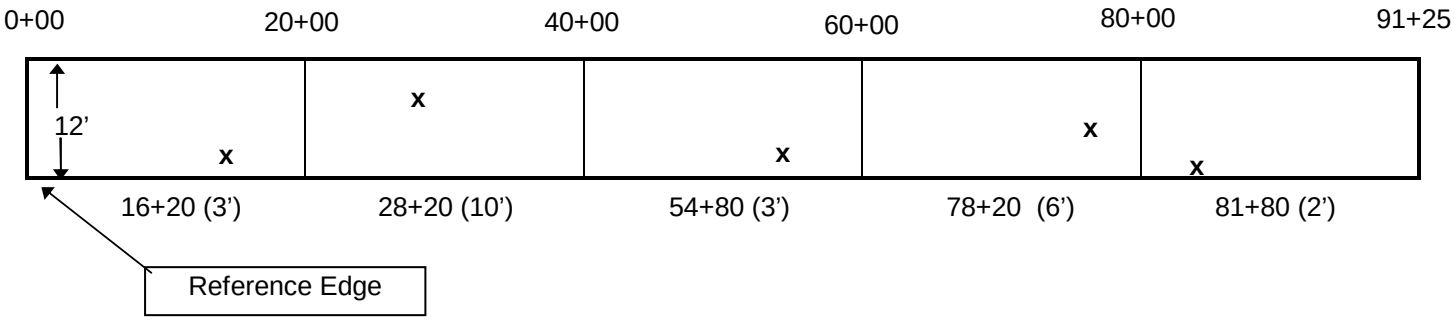

NOTE 1: **See the completed QC-5 Rev Form (Figure 10-19) on the next page.**

NOTE 2: **QC-5 form shall be completed by either the Contractor's certified roadway technician or certified density gauge operator.**

QC-5 Rev. 12-12-2002

NORTH CAROLINA DEPARTMENT OF TRANSPORTATION
DAILY CORE LOCATION & LOT SUMMARY

DATE: 9-22-10

PROJECT NO.: 8.1234567 MAP /RT. NO.: US 117 CONTRACTOR: Quality Paving PLANT LOCATION: Everywhere, NC

BASE TYPE: (New) I 19.0 C LANE DESC.: NBL Rt. BASELINE: Rt. EOP

TYPE MIX: S 9.5 B JMF NO.: 07-503-151 PROJECT ENGINEER: Payfore DeMix

CORE #	TEST SECTION			RANDOM #		LENGTH / WIDTH x RANDOM #		TEST SECTION BEGINNING STATION #	CORE LOCATION		CORE SAMPLE THICKNESS	PERCENT COMPACTION
	TEST SECTION NO.	LENGTH A	WIDTH B	LENGTH C	WIDTH D	LENGTH E=A x C	WIDTH F=B x D	G	STATION G + E	DIST.FROM BASELINE F		
1	1	2000	12'	.81	.21	1620	2.5	0+00	16+20	3	1.5 "	93.6
2	2	2000		.41	.85	820	10.2	20+00	28+20	10	1.6 "	92.8
3	3	2000		.74	.23	1480	2.8	40+00	54+80	3	1.4 "	93.1
4	4	2000		.91	.53	1820	6.4	60+00	78+20	6	1.5 "	93.5
5	5	1125	12'	.16	.17	180	2.0	80+00	81+80	2	1.5 "	92.4

LOT AVERAGE 93.1

CONSTRUCTION TYPE:
THE "NEW" CONSTRUCTION CATEGORY WILL BE DEFINED AS PAVEMENTS, EXCLUSIVE OF IRREGULAR AREAS MEETING ALL THREE OF THE FOLLOWING CRITERIA:
1.) PAVEMENT PLACED ON A NEW AGGREGATE OR SOIL BASE COMPACTED TO THE SPECIFIED DENSITY OR PAVEMENT PLACED ON A NEW ASPHALT MIX LAYER (EXCLUDING WEDGING AND LEVELING);
2.) PAVEMENT WHICH IS WITHIN A DESIGNATED TRAVEL LANE OF THE FINAL TRAFFIC PATTERN; AND
3.) PAVEMENT WHICH IS 4.0 FEET (1.2 METERS) OR WIDER.
AS AN EXCEPTION, WHEN THE FIRST LAYER OF MIX PLACED ON AN UNPRIMED AGGREGATE BASE AND IS 2.0 INCHES (50 MILLIMETERS) OR LESS IN THICKNESS, THE LAYER WILL BE INCLUDED IN THE "OTHER" CONSTRUCTION" CATEGORY.
THE "OTHER" CONSTRUCTION CATEGORY WILL INCLUDE ALL PAVEMENT EXCEPT AS DESCRIBED ABOVE AND ALSO ALL S4.75A MIX TYPES.

NEW ☑ OTHER ☐

QC Roadtech RD1-588
* PRINT CERTIFIED QMS TECHNICIAN'S NAME w/HiCAMS#

QC Roadtech
* CERTIFIED QMS TECHNICIAN'S SIGNATURE

QC Labtech P1S-422
* PRINT QC PLANTTECHNICIAN'S NAME w/HiCAMS#

QC Labtech
* CERTIFIED QC PLANTTECHNICIAN'S SIGNATURE

LOT PASSES ✓

LOT FAILS

NOTE: CONTRACTOR MUST BE NOTIFIED BY LETTER OF ANY PAY ADJUSTMENTS OR PAVEMENT REMOVAL.

* BY PROVIDING THIS DATA UNDER MY SIGNATURE AND/OR HiCAMS CERTIFICATION NUMBER, I ATTEST TO THE ACCURACY AND VALIDITY OF THE DATA CONTAINED ON THIS FORM AND CERTIFY THAT NO DELIBERATE MISREPRESENTATION OF TEST RESULTS, IN ANY MANNER, HAS OCCURRED.

Figure 10-19

10.6.8 <u>Testing a Core Sample Test Section (QC)</u>:

NCDOT Specifications require that all Superpave mixes be compacted to a minimum of 92.0 percent of the maximum specific gravity (G_{mm}), except for SF 9.5A mixes, which shall be 90.0 percent of maximum specific gravity (G_{mm}).

The density of each test section will be determined by comparing the bulk specific gravity of the core samples, which were obtained at random locations, to the maximum specific gravity (G_{mb} / G_{mm}) of mix placed in accordance with Section 7.12 of this manual. Density compliance for core samples will be initially determined by use of the maximum specific gravity obtained during initial mix verification. Once sampling and testing of the mix occurs, the average maximum specific gravity (G_{mm}) for the number of tests performed will be utilized until a moving average of the last four maximum specific gravities are obtained. Once a moving average of four tests is obtained it will be used from that point forward.

<u>If the core sample density results for each test section fails to meet the Specifications requirements detailed above, and in Table 610-6, the test section will fail and may require corrective action.</u>

The density results from all Test Section constructed during a day's production will be averaged to establish a lot. (See Section 10.3.3 for the determination of lots). All test sections regardless of length will have a minimum of (1) one random core taken. In addition, for any day's production, each lot shall have a minimum of (3) three core samples taken. As an exception, when a day's production is less than 6,000 linear feet of laydown width, the total length paved may be divided into 3 equal test sections, provided that core sample locations have not already been established.

10.6.9 <u>Numbering Quality Control (QC) Core Samples</u>

A. Quality Control Cores will be numbered consecutively for **each mix type** being produced **each day**. QC core samples numbers will start over with #1 each day for each mix type. In addition to being marked with the number, the core sample should be marked with the date and mix type.

Example :	1st Day ---	<u>I 19.0B:</u> 1, 2, 3, etc.	<u>S 9.5B</u>: 1, 2, 3, etc.
	2nd Day ---	<u>I 19.0B:</u> 1, 2, 3, etc.	<u>S 9.5B</u>: 1, 2, 3, etc.

B. If the Contractor has more than one paving operation on the same project, the second crew will have a separate series of consecutive numbers followed by a suffix "A".

Example :	1st Crew --	<u>I 19B:</u> 1, 2, 3 etc.	<u>S 9.5B</u>: 1, 2, 3 etc.
	2nd Crew	<u>I 19B:</u> 1A, 2A, 3A etc.	<u>S 9.5B</u>: 1A, 2A, 3A etc.
	3rd Crew	<u>I 19B</u> 1B, 2B, 3B etc.	<u>S 9.5B</u>: 1B, 2B, 3B etc.

C. If a second or third plant is used on the same day's operation, the numbers will continue consecutively with the appropriate suffix, if a suffix is applicable.

Example :	1st Plant ---	<u>I 19.0B:</u> 1, 2, 3
	2nd Plant ---	<u>I 19.0B:</u> 4, 5, 6, etc.

10.6.10 <u>Checking QC Core Samples</u>

The Contractor may elect to take check core samples for any of the reasons below:

1. When cored sample control is being utilized and a core sample(s) is more than 2.0 percent below the average of all core samples from the same lot., that core(s) sample may be checked.
2. When a control strip fails and a core sample(s) is more than 2.0 percent below the average of the control strip, that core(s) may be checked.

For each core sample that is in question, there shall be 3 check samples taken: 1 adjacent to the initial sample and 1 - ten feet (3 meters) to each side, longitudinally, of the initial sample. The results of these 3 check samples will be averaged and this average shall be used instead of the initial core results in question. **The initial core sample results will not be used if check samples are taken**. Check samples must be taken within 2 calendar days of the date of the initial sample. Only 1 set of check samples per sample location will be allowed. If full depth cores are necessary at these check sample locations, separation of the layer to be tested will be the responsibility of the Contractor. All check samples shall be taken in the presence of a representative of the Engineer and transported by the Contractor to the appropriate QC Lab. (See Figure 10-19). The Roadway Technician will place these samples in a sealed container if they are not to be directly transported to the QA Lab by a DOT Technician. Core sample checking procedures and requirements are as follows:

(Only allowed if core result is below the lot average by more than 2.0%)
- **Contractor's option**
- Must be taken within 2 calendar days of original sample
- Only 1 set of check samples per original core
- Contractor's responsibility to separate layers of check samples
- Must be taken in presence DOT representative

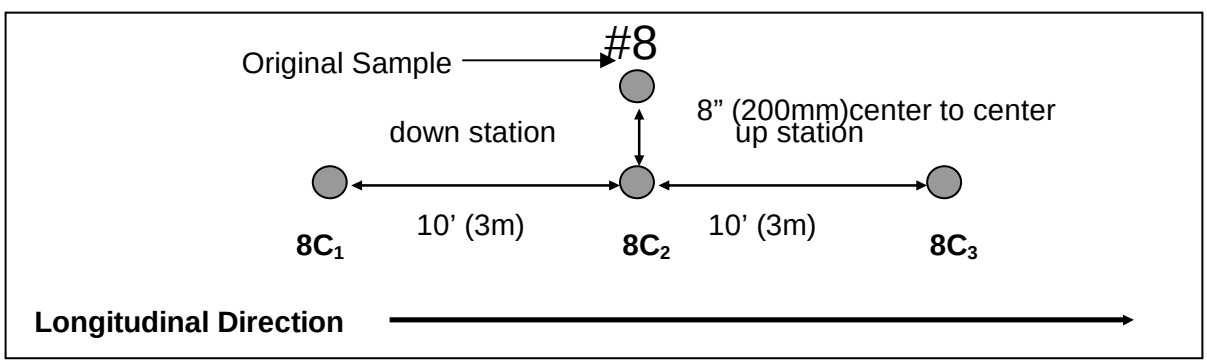

Original Sample #8 = **89.3%**
Check Samples
$8C_1$ = 88.4%
$8C_2$ = 88.8%
$8C_3$ = 88.7%
Avg. = 88.6%

Must use average of 3 check samples (88.6%) instead of original sample results (89.3%)

Figure 10-20

10.6.11 Numbering Quality Control (QC) Check Core Samples

1. The specifications allow check samples adjacent to the original core and 10 feet (3 meters) longitudinally each side of the original core.

2. All check samples will carry the same base number as the original core sample followed by a C_1 C_2 C_3 series of suffixes.

   Example : If core number **8** is in question, the check core samples will be:
   $8C_1$ (10' / 3m down station), **$8C_2$** (adjacent), and **$8C_3$** (10' / 3m up station).

10.6.12 Reporting Core Sample Control (QC) Test Sections (Form QC-5 Rev.)

Once random locations have been determined, a core sample will be taken at each location. Sample locations, sample results in percent compaction, lot average, and other appropriate information shall be recorded on Form QC-5 Rev. (See Fig. 10-19) The form shall be initiated by the Contractor's QC Technician by completing sample location information at the paving site. The QC samples and Form QC-5 will be taken to the appropriate QC Lab by QC personnel. Once the compaction results are determined, the QC Plant Technician will complete the thickness and compaction information on the form. The original form is returned to the DOT's Roadway Technician as soon as the test results are known. The DOT's Roadway Technician will attach the form to the daily roadway report (M&T 605) and forward to the Resident Engineer.

Determining Number of Test Sections
Cored Density Control

Contractor's Responsibility, subject to DOT roadway technician's concurrence. Performed daily to ensure the minimum testing frequency is being met.

All test sections for core sample density will be a maximum of 2000 feet (600m) or fraction thereof per day.

All test sections, regardless of length will have a minimum of 1 random core taken. In addition, any day's production shall have a minimum of 3 core samples taken.

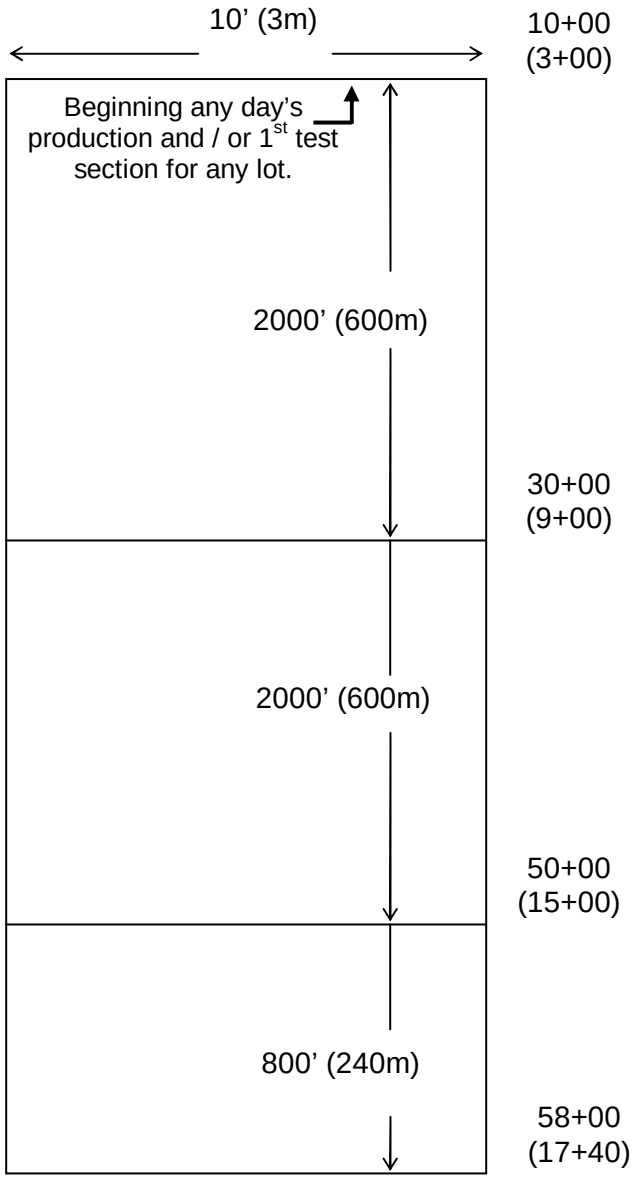

4800 linear feet (1440m) 10 feet wide (3m)
4800' ÷ 2000' = 2.4 (Min. of 3 Required)

Figure 10-21

10.7 CORE SAMPLE DENSITY QUALITY ASSURANCE (QA)

Quality Assurance is a process of sampling and testing the Contractor's product and monitoring his operations to confirm that the Quality Control results are adequate and accurate. This process is normally performed by Department personnel.

Quality Assurance testing shall be accomplished in the following ways:

1) Conducting verification sampling and testing on test sections at random locations within the same QC test sections at a frequency of 10% of the required QC sampling and testing frequency. This 10% frequency is in addition to the 5% QA comparison samples.
2) Testing randomly selected comparison core samples taken adjacent to the Contractor's quality control core samples 8 inches (200 mm) center-to-center at a frequency equal to or greater than 5% of the Quality Control core sampling and testing frequency;
3) Retesting randomly selected quality control core samples at a frequency equal to or greater than 5% of the Quality Control core sampling and testing frequency;
4) Periodically observing sampling and testing performed by the Contractor;
5) By periodically directing the recalculation of random numbers for the quality control core test locations. The original QC test locations maybe tested by QA and evaluated as verification tests; or
6) By any combination of the above.

Comparison and verification core samples will be taken in the presence of a DOT technician, and either delivered directly to the appropriate QA Lab by a DOT technician or placed in a sealed container and delivered to the Contractor's QC Lab for pickup by QA personnel.

Results of all density quality assurance tests will be provided to the Contractor within 3 working days after the samples have been obtained by the QA personnel.

Differences between the Contractor's quality control and the Department's quality assurance test results will be considered acceptable if within the following limits.

Test	Acceptable Limits of Precision
Retest of QC Core Sample	± 1.2% (percent compaction)
Comparison of QA Core Sample	± 2.0% (percent compaction)
QA Verification Core Samples*	± 2.0 % (percent compaction)

*Note: Verification tests will be compared to QC results from the same test section.

In the event test results are outside the above acceptable limits of precision or the quality assurance or verification test results are below the minimum specification requirements, the Engineer will immediately investigate the reason for the difference. If the potential for a pavement failure is present, the Engineer may suspend production as stated in Article 108-7 of the Standard Specifications while the investigation is in progress.

The Engineer's investigation may include checking of the Contractor's testing equipment, comparison testing of other retained quality control samples, or additional core sample testing of the roadway pavement in question. If additional core samples are necessary to resolve the difference, the Contractor shall core these samples at the direction of the Engineer and these will be tested jointly by the

Contractor's quality control and Department's quality assurance personnel. If the reason for the difference cannot be determined, payment for the mix in question will be determined in accordance with Article 105-3 of the Standard Specifications. If the reason for the difference is determined to be an error or other discrepancy in the quality control test results, the applicable quality assurance test results will be used to determine compliance with the Specification density requirements.

10.7.1 <u>Quality Assurance (QA Comparison) Core Sample Test Section Procedures:</u>

The individual responsible for Quality Assurance testing, normally Department personnel or representative, will randomly select quality control test sections for mainline and intersections at a frequency of 5% or more for Quality Assurance testing. The Quality Assurance core will be obtained 8 inches, center to center, from the Contractor's Quality Control core within the randomly selected QC test section. The QA test sections will have the same base number as the QC test sections followed by the suffix QA. The QA core obtained adjacent to QC core number 10 will be number 10QA. QA comparison cores of QC check samples will also carry the same base QC number. For example a QA comparison core of QC sample $8C_3$ will be numbered $8C_3$QA.

Comparison core samples will be taken in the presence of a DOT technician, and either delivered directly to the appropriate QA Lab by a DOT technician or delivered to the Contractor's QC Lab for pickup by QA personnel. If the cores are delivered to the QC lab for later pick-up, they should be placed inside a 6 inch diameter tin or plastic cylinder and then placed into a cloth sample bag. The sample bag should then be sealed with a metal tag. These sample cylinders, sample bags and metal tags should be obtained from the Division QA Lab. If core samples are not delivered to the QA Lab in accordance with either of the above methods, the samples will be discarded and not tested.

10.7.2 <u>Quality Assurance (QA Verification) Core Sample Test Section Procedures:</u>

Verification sampling and testing is an integral part of the Department's quality assurance process. It is independent sampling and testing performed by the QA personnel to help assure that QC density results are accurate and acceptable. Listed next are the Department's current guidelines on verification sampling and testing for core sample density control. It is very important that all personnel involved with the QMS density sampling and testing procedures of asphalt pavements be knowledgeable of these requirements and guidelines. Should these test results vary considerably (below 90%) from the Contractor's QC results, further testing may be directed by the Department which then could be used as part of the acceptance process. Further testing may include taking check cores, additional verification cores, or directing additional QC cores. The verification requirement will be satisfied by the individual responsible for Quality Assurance testing, normally Department personnel or representative, assuring that at least 10% of the required number of Quality Control test sections for mainline and intersections are randomly tested at locations independent of the Contractor's QC cores. All verification sample numbers and random locations will be documented in a field sample book by the QA personnel. (See example log book Figure 10-16) These verification test sections will be in addition to the minimum 5% required comparison QA samples.

QA Verification core samples will be taken in the presence of a DOT technician, and either delivered directly to the appropriate QA Lab by a DOT technician or delivered to the Contractor's QC Lab for pickup by QA personnel. If the cores are delivered to the QC lab for later pick-up, they should be placed inside a 6 inch diameter tin or plastic cylinder and then placed in a cloth sample bag. The sample bag should then be sealed with a metal tag. These sample cylinders, sample bags and metal tags should be obtained from the Division QA Lab. If core samples are not delivered to the QA Lab in accordance with either of the above methods, the samples will be discarded and not tested.

Verification cores will be numbered by the DOT Roadway Technician. These samples will be taken at random locations within the same test section as the QC samples. The number will be the same base number as the QC core for that test section followed by the letter "V". For example: If the QC core number is 3 and a verification sample is taken from the same test section, the QA verification core number will be 3"V". When the contractor has more than one paving crew on the same project the same day, verification core samples will have he same base number ac the QC core for that test section followed by the suffix "V".

Documentation of these verification cores will be on the appropriate QMS forms (QA-5 and QA/QC5).

10.8 ACCEPTANCE OF DENSITY (DENSITY GAUGE AND/OR CORE SAMPLE CONTROL)

The Department will evaluate the asphalt pavement for density compliance after the asphalt mix has been placed and compacted using the Contractor's quality control test results, the Department's quality assurance test results (including verification samples), and by observation of the Contractor's total density quality control process conducted in accordance with Section 609. NCDOT Specifications require that all Superpave mixes be compacted to a minimum of 92.0 percent of the maximum specific gravity (G_{mm}), except for SF 9.5A mixes, which shall be 90.0 percent of maximum specific gravity (G_{mm}).

The pavement will be accepted for density on a lot by lot basis. See Section 10.3.3 of this Manual for the "Determination of Lots".

A passing lot for density acceptance purposes is defined as a lot for which the average of all test sections meets minimum specification requirements.

A failing lot for density acceptance purposes is defined as a lot for which the average of all test sections, and portions thereof, fails to meet the minimum specification requirement. If additional density sampling and testing, beyond the minimum requirement, is performed and additional test sections are thereby created, then all test results shall be included in the lot average. A lot does not fail for acceptance purposes and can not be penalized unless the average for that lot fails to meet the minimum specification requirement. However, any portion of a lot that is obviously unacceptable in the opinion of the Engineer will be rejected for use in the work and replaced with mix that meets the specification requirements.

If the Engineer determines that a given lot of mix which falls in the "**new**" category does not meet the minimum specification requirements but the work is determined to be reasonably acceptable and may remain in place, the lot may be accepted at a reduced pay factor in accordance with the following formula. The reduced pay factor will apply only to the mix unit price.

$$\textbf{Reduced Pay Factor} = 100 + \left[\left(\frac{Actual\ \ Density - Specified\ \ Density}{2}\right) x30\right]$$

Where:

Actual Density = the lot average density, not to exceed 2.0% of the specified density

Specified Density = the density in Table 610-6 or as specified in the contract

Acceptance of all failing lots falling in the "**other**" category will be made under the provisions of Article 105-3 of the Standard Specifications.

Any density lot not meeting the density requirements detailed in Table 610-6 of this manual will be evaluated for acceptance by the Engineer. If the lot is determined to be reasonably acceptable, the mix will be paid at an adjusted contract price in accordance with Article 105-3 of the Specifications. If the lot is determined not to be acceptable, the mix will be removed and replaced with mix meeting and compacted to the requirement of the Standard Specifications.

A high frequency of asphalt plant mix or density deficiencies may result in future deficient asphalt being excluded from acceptance at an adjusted contract unit price in accordance with Article 105-3. The Engineer shall document cases of frequent deficiencies and provide in writing the details of deficiencies to the Contractor with copies to the Pavement Construction Engineer and Asphalt Design Engineer. Upon receipt of these details, the Contractor shall develop a plan for corrective action and submit it to the Engineer in writing. Failure to satisfactorily correct repeated deficiencies may result in future deficient asphalt being excluded from acceptance at an adjusted contract unit price in accordance with Article 105-3. This acceptance process will apply to all asphalt produced or placed and will continue until the Engineer determines a history of quality asphalt production and placement is reestablished.

Any reduction in pay due to failing densities will be in addition to any reduction in pay due to failing mix property test results on the same mix. For example: If there is a 10% price reduction due to mix properties and a 30% reduction due to failing densities, the total price reduction will be 40% or a pay factor of 60% that will be applied to the contract unit bid price.

QA-5

NORTH CAROLINA DEPARTMENT OF TRANSPORTATION

12-17-02

REPORT OF QUALITY ASSURANCE CORE SAMPLE DENSITY RESULTS

PRIME

PROJECT NO. 8.1234567 RESIDENT ENGINEER: I. B. DaMan

CONTRACTOR: Quality Paving DIVISION: 1 PLANT LOCATION: Everywhere, NC

CORE SAMPLE NO.	DATE PLACED	TYPE MIX	JMF NO.	MAP/ ROUTE NUMBER	STATION NUMBER	LANE DESCRIPT.	QA CORE RESULTS	QC CORE RESULTS	WITHIN LIMITS OF PRECISION	
									YES	NO
6R	5/28	I19.0C	99-001-051	US 17	16+30	Lt. NBL	92.8	93.4	✓	
3V	5/29	S9.5C	04-121-151	US 17	21+45	Rt. NBL	94.1	93.8	✓	
4QA	5/29	S9.5C	04-121-151	US 17	36+12	Rt. NBL	93.6	94.2	✓	
4V	5/30	S9.5C	04-121-151	US 17	60+18	Lt. NBL	91.7 *	92.4	✓	

CODE: "R" = Retest of QC Sample
"V" = Verification Sample
"QA" = Comparison Sample

Distribution: 1. Original to Resident Engineer
2. FAX Copy to QC Lab
3. QC Lab to Forward Copy to NCDOT Roadway Technician

Rocky Road RD1 - 4273

**PRINT CERTIFIED QA ROADWAY TECHNICIAN'S NAME w/HiCAMS #

Rocky Road

**CERTIFIED QA ROADWAY TECHNICIAN'S SIGNATURE

Libby Lab P1S - 5378

**PRINT CERTIFIED QA LAB TECHNICIAN'S NAME w/HiCAMS #

Libby Lab

** CERTIFIED QA LAB TECHNICIAN'S SIGNATURE

**NOTE: BY PROVIDING THIS DATA UNDER MY SIGNATURE AND/OR HiCAMS CERTIFICATION NUMBER, I ATTEST TO THE ACCURACY AND VALIDITY OF THE DATA CONTAINED ON THIS FORM AND CERTIFY THAT NO DELIBERATE MISREPRESENTATION OF TEST RESULTS, IN ANY MANNER, HAS OCCURRED.

Figure 10-22

10.9 LIMITED PRODUCTION PROCEDURES FOR DENSITY GAUGE AND CORE SAMPLE DENSITY CONTROL FAILURES

The Contractor shall operate on a limited production basis if, for the **same mix type and contract,** one of the following items occurs (except as noted in the 1st paragraph below):

(1) Two consecutive failing lots, except on resurfacing*
(2) Three consecutive failing lots on resurfacing*.
(3) Two consecutive failing density gauge control strips.

*Resurfacing is defined as the first new uniform layer placed on an existing pavement.

As an exception to the above, pavement within each construction category (New and Other) as defined in Article 610-14, and pavement placed simultaneously by multiple paving operations will be evaluated independently for limited production purposes.

Once the Contractor is placed on limited production he shall remain on limited production for that **mix type** regardless of the plant or JMF. Recycled versions of the same mix will not be considered a different mix type. The Contractor may elect to produce a different mix design of the same mix type but must begin under limited production procedures. **As an exception**, the Engineer may grant approval to produce a different mix design of the same mix type if Quality Control and Quality Assurance plant mix test indicate the failing densities are attributed to the mix problem(s) rather than compaction related problems and limited production start up would not be required. The determination of whether a mix problem exists at this time will be made by QA personnel (normally the QA Supervisor). Should the Contractor elect to produce a different mix design of the same mix type, all of the previous mix in question that has not been tested with a correlated target density will be accepted based on the calculated target unless the Contractor elects to cut density acceptance cores**.**

Limited production is defined as the production, placement, and compaction of a sufficient quantity of mix to construct a 300 ft. control strip plus 100 feet of pavement adjacent to each end of the control strip.

The Contractor shall remain on limited production until such time as satisfactory density results are attained or two consecutive control strips have been attempted without achieving acceptable density test results, whichever occurs first. Should the Contractor fail to achieve satisfactory density at this point, production of that mix type shall cease until such time as the cause of the failing density test results can be determined. Unless otherwise approved, the Contractor will be required to place this mix type off the project limits for evaluation prior to the proceeding on the project.

When proceeding on limited production due to failing density for either density gauge or core control, the 500 feet of pavement, which includes the control strip, will be considered a lot. The average density of the five control strip cores will be used as the density result for acceptance of that lot in accordance with Article 610-14.

Quality control mix sampling and testing shall be performed at the frequencies detailed in Subarticle 609-6(B) of the Specifications, unless placing mix on a limited production basis due to failing densities. When on limited production, a full test series shall be performed on the actual mix placed in each control strip. When a mix sample is obtained in conjunction with a control strip, that sample will not substitute for the next randomly scheduled QC mix sample for that tonnage increment, nor shall it be plotted on the control charts. However, all applicable plant mix tests results shall be reported to QA.

The maximum specific gravity (G_{mm}) used to calculate percent compaction for the control strip placed shall be the individual G_{mm} for the sample of mix taken from the mix incorporated into the control strip. If there is a G_{mm} change on the Job Mix Formula in accordance Section 7.4.3, all moving averages shall be re-established. Subsequent QC mix samples will be taken in accordance with normal random sampling procedures. When placing mix on a limited production basis, the contractor's QC plant personnel will notify roadway personnel from which truck the mix sample was taken. The notification method will be at the Contractor's option (radio, telephone, and note on load ticket, etc.) This load shall be included within the 300 ft. control strip.

If the Contractor does not operate by the limited production procedures as specified in the first paragraph of this section, all applicable failing lots and mix produced thereafter will be considered unacceptable. This material shall be removed and replaced with material which complies with the Specifications at no additional cost to the Department. Payment will be made for the actual quantities of materials required to replace the removed quantities, not to exceed the original amounts. The final in-place materials will be accepted in accordance with Article 105-3.

10.10 INDEPENDENT ASSURANCE (IA) SAMPLING & TESTING FOR DENSITY CONTROL

Density Gauge and Conventional Asphalt Density Correlation Program

10.10.1 Density Gauge Correlation Program

This program is designed to provide assurance of the on-going proficiency of the QC/QA Density program with regards to density gauge testing procedures and equipment.

The IA Inspector shall visit the FHWA project and perform comparative tests at a frequency of not less than 20% of those performed by the Quality Control and Quality Assurance Inspectors.

The IA Inspector shall determine the location of the QC and QA test sections and randomly select the comparative test sections. This selection shall include only those QC and QA sections tested since the last visit. The IA Inspector shall keep a testing record, which shall show the QC and QA test sections on which comparative tests have been performed. Comparative testing can be performed on any section regardless of its acceptance status.

Once the comparative test sections have been determined the IA Inspector shall perform a comparative test at each test site in the test section. The gauge shall be placed in the same roller track with the body of the gauge in the same direction that the acceptance gauge was placed. The readings shall be taken with the testing depth at the same depth setting as the QC or QA gauge and the testing time shall be the same as the QC and QA test.

In order to obtain the control strip data the IA inspector must be at the control strip site when the control strip is placed. This makes communication between the QC personnel, QA personnel, and the IA Inspector critical. The IA Inspector shall be notified whenever a new control strip is placed, for whatever reason.

Prior to performing the tests the IA Inspector shall determine the control strip value used by the density inspector. This value shall be compared to the results obtained at each test site and the % compaction recorded. When the test section is completed the results shall be averaged and the average compared to the average obtained by the density inspector, according to the IAS Correlation Chart.

Any correlation that is greater than 3.0% shall be considered to be poor. All fair and poor ratings shall be investigated in an attempt to determine the reason for the disparity.

The IA Inspector shall operate the gauge in a manner consistent with the policies and procedures established by the Soils Laboratory Density Section.

10.10.2 Conventional Density Correlation Program

This program is designed to provide assurance of the on-going proficiency of the QC/QA Density program with regards to Conventional testing procedures and equipment.

The Independent Assurance inspector shall visit the Division QA labs and randomly select 20% of the QA cores representing each mix type used on these projects. The core samples will be brought to the Asphalt Lab and tested for specific gravity.

The QA and IA results shall be correlated according to the IAS Correlation Chart.

Any correlation that is greater than 0.06 shall be considered to be poor. All fair and poor ratings shall be investigated in an attempt to determine the reason for the disparity.

SECTION 11

PAVEMENT SMOOTHNESS / RIDEABILITY

11.1 PAVEMENT SMOOTHNESS

Pavement smoothness is an important consideration for several reasons. Studies have indicated that the prime factor that influences the user's opinion of a road is longitudinal roughness. Rough riding pavements generate complaints from motorists by providing uncomfortable rides, damaging vehicles, reducing travel speeds, and accelerating the wear of the pavement structure itself. Many believe that pavement roughness is an indicator of overall quality of workmanship by the Contractor. It is generally believed that if the Contractor provides a very smooth pavement, there is greater likelihood that good quality workmanship has been provided throughout the many steps of roadway construction that span the spectrum from subgrade preparation to rolling of the final surface layer. There is also a growing belief among pavement engineers that smooth pavements not only provide a higher level of service but also last longer than otherwise equivalent but initially rougher pavements. Because of these considerations, specifications have been developed in an effort to achieve smoother pavements. In some specifications, incentives and disincentives are provided, depending on the initial level of smoothness achieved during construction.

Roughness experienced by a roadway traveler is a function of pavement profile, vehicle speed, and various vehicle parameters, including tire and suspension characteristics. A variation in any of these factors can make a road profile appear either smooth or rough. From a passenger's viewpoint, roughness can be defined as an undesirable combination of road profile, vehicle parameters, and speed.

Pavement smoothness is adversely affected by a lack of uniformity in the paving operations, improper aggregate gradations, variation in mix temperature, variation in paver speed, improper operation of trucks, poor joint-construction practices, segregation and improper rolling.

Stopping the paver can cause roughness in the pavement. Every time the paver stops, there is a possibility of the screed leaving a mark on the surface of the mat. If the screed settles into the mix, it causes the automatic sensor to act as if the paver has traveled into a depression. As the paver starts off, the screed lays a thicker mat. This continues until the sensor recognizes the excessive thickness and decreases the slope of the screed. Then a dip is developed until the screed levels out, approximately 30 feet (10 meters) from where the paver stopped.

Irregularities in the lower courses can usually be corrected by removing or adding material. In surface courses, the entire affected area may need to be removed promptly and sufficient new material placed to form a true and even surface. When the required smoothness is obtained on the first course or multi-layered pavements, the subsequent courses can usually be placed uniformly by simply setting the paver for the thickness required and proper use and operation of the automatic screed controls.

Rough pavements also result from changes in amounts of material introduced in front of the screed. If there is not enough material in front of the screed, the screed will drop. If there is too much material in front of the screed, it will rise. A uniform head of mix should be maintained at all times in front of the screed.

End of the load segregation, which is often times caused by emptying the paver hopper between loads, leaves a rough pavement surface texture. An adequate quantity of mix should be maintained in the paver hopper at all times during laydown operations to help prevent this problem.

11.1.1 Profile Testing

The importance of constructing a project to the plan profile and grade for driver safety and producing a smooth pavement which meets or exceeds the testing tolerances cannot be overemphasized. Deviations from the acceptable tolerances can result in expensive corrective actions and/or significant price adjustments. The methods of profile testing utilized by NCDOT to determine specification compliance are as follows:

1) Article 610-12 of the Specifications requires that any location on the pavement selected by the Department and all joints be checked using a 10 foot non-mobile straightedge and that the variation of the surface from the straightedge shall not exceed 1/8 inch between any two contact points. This requirement applies to all layers of mix not just the final surface. The 10-foot straightedge is furnished by the Contractor and must be used by both the Contractor and the DOT technician to assure that the surface at joints and all other pavement surfaces meet this requirement. The paving operation should not begin until this 10 foot straightedge is on hand at the paving site.

2) Article 610-13 of the Specifications requires that the finished pavement surface is tested using either an Inertial Profiler (Option 1) or the North Carolina Hearne Straightedge (Option 2). Contractor needs to submit in writing to the Engineer the selected option for smoothness acceptance testing before any paving operations begin. If Option 1 is selected, the Contractor shall furnish an Inertial profiler equipped with line laser technology to measure pavement smoothness. The Specification applies only to the final surface course; however, the Contractor should not wait until the final layer before using one of these options for quality control purposes.

Details on the Inertial Profiler (Option 1) using IRI (International Roughness Index)

The International Roughness Index (IRI) is the roughness index obtained from measured longitudinal road profiles. It is calculated using a quarter-car vehicle math model, whose response is accumulated to yield a roughness index with units of slope (in/mi, m/km, etc.). IRI has become the road roughness index most commonly used worldwide for evaluating and managing road systems.

Inertial profilers measure the pavement surface profile using a distance measurement transducer, noncontact vertical displacement transducer (which NCDOT requires line laser technology), an accelerometer, and a computer. The distance measurement transducer operates similarly to a car's odometer, but is more precise. The noncontact vertical transducer measures the distance from the device and the pavement surface at selected intervals. The accelerometer determines the inclination of the profiler as it ascends and descends hills and corrects for any movement of the vertical displacement transducer relative to the ground caused by the suspension. The computer collects and records all the data from the devices and uses it to calculate the IRI index to describe the ride quality of the pavement.

The system, the operator, and the testing requirements for intertial profilers is covered in several standards from AASHTO and ASTM: AASHTO M328, ASTM E1926, AASHTO R56, and AASHTO R57, and are referenced in the NCDOT Standard Specifications.

The equipment should be configured per the manufacturer's recommendations and to record actual elevation of the pavement surface. The profiler's internal IRI calculation mode should not be used. The software is required to produce electronic inertial road profiles in a format compatible with the latest version of FHWA's ProVAL (Profile Viewing and Analysis software). Contractor shall provide raw data to the Engineer after each run. The profile data shall be filtered with a cutoff wavelength of 300 feet. The interval at which relative profile elevations are reported can be approximately 2".

FHWA's ProVAL software will be used to analyze the raw data. Contact the Pavement Construction Section for assistance with the ProVAL software and training, if necessary. Contractor shall also submit a formal report with the details as required in the specification. Pay adjustments will be based on MRI values, which is the average of the IRI values for the left and right wheel path for every 0.10-mile section. See Construction Manual for step-by-step checklist for Contractor and Department responsibilities.

The Final Surface Testing will apply to all projects when two or more layers of new asphalt pavement are to be constructed, the speed limit of the facility is 45 mph or greater, and the project length is one mile or greater. Divisions may also require it on select projects.

When Final Surface Testing is not required, there will be a Special Provision in those contracts that states "Final surface testing is not required on this project."

FINAL SURFACE TESTING - ASPHALT PAVEMENTS - Refer to Article 610-13 of the *2012 Standard Specifications*

On portions of this project where the typical section requires two or more layers of new pavement, perform smoothness acceptance testing of the longitudinal profile of the finished pavement surface using either an Inertial Profiler or a North Carolina Hearne Straightedge (Model No. 1).

Use an Inertial Profiler (Option 1) to perform smoothness acceptance testing of the longitudinal profile of the finished pavement surface. Furnish an inertial profiler(s) necessary to perform this work. Maintain responsibility for all costs related to the procurement, handling, and maintenance of these devices.

Furnish and operate the Hearne straightedge (Option 2) to determine and record the longitudinal profile of the pavement on a continuous graph.

Before beginning any paving operations, the Contractor shall select one of the above options and submit documentation to the Engineer on the selected option for smoothness acceptance.

(A) Option 1 - Inertial Profiler

Use an Inertial Profiler to measure the longitudinal pavement profile for construction quality control and smoothness acceptance. Use a profiler with line laser technology as single-point laser technology will not be allowed. Produce International Roughness Index (IRI) and Mean Roughness Index (MRI) values for measuring smoothness.
Use testing and recording software to produce electronic inertial road profiles in a format compatible with the latest version of FHWA's ProVAL (Profile Viewing and Analysis) software.

The Inertial Profiler shall be calibrated and verified in accordance with the most current version of AASHTO M 328. Provide certification documentation that the profiler meets AASHTO M 328 to the Engineer before the first day the Inertial Profiler is used on the project.

Configure the profiler to record the actual elevation of the pavement surface. Do not use the profiler's internal IRI calculation mode. The profile data shall be filtered with a cutoff wavelength of 300 ft. The interval at which relative profile elevations are reported shall be 1".

Provide IRI data in accordance with most current version of ASTM E1926. Utilize personnel trained to record and evaluate IRI data.

Provide a competent operator, trained in the operation of the Inertial Profiler. Operation of the Inertial Profiling system shall conform to AASHTO R 57.

Provide the user selected Inertial Profiler settings to the Engineer for the project records. Certification of the Inertial Profiling system shall conform to AASHTO R 56.

Remove all objects and foreign material on the pavement surface prior to longitudinal pavement profile testing.

Operate the profiler at any speed as per the manufacturer's recommendations, however, the speed must be constant to within ± 3 mph of the intended speed and any required acceleration should be as gradual as possible. For example, if the intended speed were 30 mph, the acceptable range of speed for testing would be 27 to 33 mph.

Operate the Inertial Profiler in the direction of the final traffic pattern. Collect IRI data from both wheel paths during the same run. It is permissible to collect data one wheel path at a time if each wheel path is tested and evaluated separately. A wheel path is defined as the 3 foot from the edge of the travel lane. MRI values are the average of the IRI values from both wheel paths. When using an inertial profiler that collects a single trace per pass, take care to ensure that the measurements from each trace in a travel lane start and stop at the same longitudinal locations. Unless otherwise specified, multiple runs are not necessary for data collection.

Operate the automatic triggering method at all times unless impractical. A tape stripe or traffic cone wrapped with reflective material may be used to alert the profiler's automatic triggering sensor to begin data collection. The profiler shall reach the intended operating speed before entering the test section. The runup and runout distances should be sufficient to obtain the intended operating speed and to slow down after testing is completed.

Divide the pavement surface for the project into sections which represent a continuous placement (i.e. the start of the project to bridge, intersection to intersection). Terminate a section 50 ft before a bridge approach, railroad track, or similar interruption. (Separate into 0.10-mile sections).

The evaluation of the profiles will be performed on a section basis. A section is 0.10 mile of a single pavement lane. For any section, which is less than 0.10 mile in length, the applicable pay adjustment incentive will be prorated on the basis of the actual length.

Mark the limits of structures and other special areas to be excluded from testing using the profiler's event identifier such that the exact locations can be extracted from the profile data file during processing.

Unless otherwise authorized by the Engineer, perform all smoothness testing in the presence of the Engineer. Perform smoothness tests on the finished surface of the completed project or at the completion of a major stage of construction as approved by the Engineer. Coordinate with and receive authorization from the Engineer before starting smoothness testing. Perform smoothness tests within 7 days after receiving authorization. Any testing performed without the Engineer's presence, unless otherwise authorized, may be ordered retested at the Contractor's expense.

After testing, transfer the profile data from the profiler portable computer's hard drive to a write once storage media (DVD-R or CD-R) or electronic media approved by the Engineer. Label the disk or electronic media with the Project number, Route, file number, date, and termini of the profile data. Submit the electronic data on the approved media to the Engineer immediately after testing and this media will not be returned to the Contractor.

Submit documentation and electronic data of the evaluation for each section to the Engineer within 10 days after completion of the smoothness testing. Submit the electronic files compatible with ProVAL and the evaluation in tabular form with each 0.10 mile segment occupying a row. Include each row with the beginning and ending station for the section, the length of the section, the original IRI values from each wheel path, and the MRI value for the section. Each continuous run for a section will occupy a separate table and each table will have a header that includes the following: the project contract number, county, the roadway number or designation, a lane designation, the JMF used for the final lift, the dates of the smoothness runs, and the beginning and ending station of the continuous run. Summarize each table at the bottom.

Traffic control and all associated activities included in the pavement smoothness testing of the pavement surface will be the responsibility of the Contractor.

(1) Acceptance for New Construction

IRI and MRI numbers recorded in inches per mile will be established for each 0.10-mile section for each travel lane of the surface course designated by the contract. Areas excluded from testing by the profiler will be tested using a 10-foot straightedge in accordance with Article 610-12.

Table 610-7 provides the acceptance quality rating scale of pavement based on the final rideability determination.

TABLE 610-7 MRI PRICE ADJUSTMENT PER 0.10-MILE SECTION	
MRI after Completion (Inches Per Mile)	**Price Adjustment Per Lane (0.10-Mile Section)**
45.0 and Under	$200.00
45.1-55.0	PA = 600 – (10 * MRI)
55.1-70.0	Acceptable (No Pay Adjustment)
70.1-90.0	PA = 650 – (10 * MRI)
Over 90.1	Corrective Action Required

This price adjustment will apply to each 0.10-mile section based on the Mean Roughness Index (MRI), the average IRI values from both wheel paths.

When corrections to the pavement surface are required, the Engineer shall approve the Contractor's method of correction. Methods of correction shall be milling and inlay, remove and replace, or other methods approved by the Engineer. To produce a uniform cross section, the Engineer may require correction to the adjoining traffic lanes or shoulders. Corrections to the pavement surface, the adjoining traffic lanes and shoulders will be at no cost to the Department.
Where corrections are made after the initial smoothness testing, the pavement will be retested by the Contractor to verify that corrections have produced the acceptable ride surface. No incentives will be provided for sections on which corrective actions have been required. The Contractor will have one opportunity to perform corrective action(s).

(2) Localized Roughness

Areas of localized roughness shall be identified through the "Smoothness Assurance Module" provided in the ProVAL software. Use the "Smoothness Assurance Module" to optimize repair strategies by analyzing the measurements from profiles collected using inertial profilers. The ride quality threshold for localized roughness shall be 125 in/mile at the continuous short interval of 25 ft. Submit a continuous roughness report to identify sections outside the threshold and identify all localized roughness, with the signature of the Operator included with the submitted IRI trace and electronic files.

The Department will require that corrective action be taken regardless of final IRI. Re-profile the corrected area to ensure that the corrective action was successful. If the corrective action is not successful, the Department will assess a penalty, or require additional corrective action.

Corrective work for localized roughness shall be approved by the Engineer before performing the work and shall consist of either replacing the area by milling and inlaying or other methods approved by the Engineer. Any corrective action performed shall not reduce the integrity or durability of the pavement that is to remain in place. Milling and inlay or any corrective actions shall meet the specifications requirements for ride quality over the entire length of the correction. Notify the Engineer 5 days prior to commencement of the corrective action.

Localized roughness correction work shall be for the entire traffic lane width. Pavement cross slope shall be maintained through corrective areas.

(B) Option 2 - North Carolina Hearne Straightedge

Push the straightedge manually over the pavement at a speed not exceeding 2 mph. For all lanes, take profiles in the right wheel path approximately 3 ft from the right edge of pavement in the same direction as the paving operation, unless otherwise approved due to traffic control or safety considerations. As an exception, lanes adjacent to curb and gutter, expressway gutter, or shoulder berm gutter may be tested in the left wheel path. Make one pass of the straightedge in each full width travel lane. The full lane width should be comparable in ride quality to the area evaluated with the Hearne Straightedge. If deviations exist at other locations across the lane width, use a 10 foot non-mobile straightedge or the Hearne Straightedge to evaluate which areas may require corrective action. Take profiles as soon as practical after the pavement has been rolled and compacted, but no later than 24 hours following placement of the pavement, unless otherwise authorized by the Engineer. Take profiles over the entire length of final surface travel lane pavement exclusive of Y-line travel lanes less than or equal to 1,000 ft in length, ramps less than or equal to 1,000 ft in length, turn lanes less than or equal to 1,000 ft in length, structures, approach slabs,

paved shoulders, loops, and tapers or other irregular shaped areas of pavement, unless otherwise approved by the Engineer. Test in accordance with this provision all mainline travel lanes, full width acceleration or deceleration lanes, Y-line travel lanes greater than 1,000 ft in length, ramps, full width turn lanes greater than 1,000 ft in length, and collector lanes.

At the beginning and end of each day's testing operations, and at such other times as determined by the Engineer, operate the straightedge over a calibration strip so that the Engineer can verify correct operation of the straightedge. The calibration strip shall be a 100 foot section of pavement that is reasonably level and smooth. Submit each day's calibration graphs with that day's test section graphs to the Engineer. Calibrate the straightedge in accordance with the current NCDOT procedure titled *North Carolina Hearne Straightedge - Calibration and Determination of Cumulative Straightedge Index*. Copies of this procedure may be obtained from the Department's Pavement Section in the Construction Unit.

Plot the straightedge graph at a horizontal scale of approximately 25 ft/in with the vertical scale plotted at a true scale. Record station numbers and references (bridges, approach slabs, culverts, etc.) on the graphs. Distances between references/stations must not exceed 100 ft. Have the operator record the Date, Project No., Lane Location, Wheel Path Location, Type Mix, and Operator's Name on the graph.

Upon completion of each day's testing, evaluate the graph, calculate the Cumulative Straightedge Index (CSI), and determine which lots, if any, require corrective action. Document the evaluation of each lot on a QA/QC-7 form. Submit the graphs along with the completed QA/QC-7 forms to the Engineer, within 24 hours after profiles are completed, for verification of the results. The Engineer will furnish results of their acceptance evaluation to the Contractor within 48 hours of receiving the graphs. In the event of discrepancies, the Engineer's evaluation of the graphs will prevail for acceptance purposes. The Engineer will retain all graphs and forms.

Use blanking bands of 0.2", 0.3" and 0.4" to evaluate the graph for acceptance. The 0.2" and 0.3" blanking bands are used to determine the Straightedge Index (SEI), which is a number that indicates the deviations that exceed each of the 0.2" and 0.3" bands within a 100 ft test section. The Cumulative Straightedge Index (CSI) is a number representing the total of the SEIs for one lot, which consist of not more than 25 consecutive test sections. In addition, the 0.4" blanking band is used to further evaluate deviations on an individual basis. The CSI will be determined by the Engineer in accordance with the current procedure titled *North Carolina Hearne Straightedge - Calibration and Determination of Cumulative Straightedge Index.*

The pavement will be accepted for surface smoothness on a lot by lot basis. A test section represents pavement one travel lane wide not more than 100 ft in length. A lot will consist of 25 consecutive test sections, except that separate lots will be established for each travel lane, unless otherwise approved by the Engineer. In addition, full width acceleration or deceleration lanes, ramps, turn lanes, and collector lanes will be evaluated as separate lots. For any lot that is less than 2,500 ft in length, the applicable pay adjustment incentive will be prorated on the basis of the actual lot length. For any lot which is less than 2,500 ft in length, the applicable pay adjustment disincentive will be the full amount for a lot, regardless of the lot length.

If during the evaluation of the graphs, 5 lots require corrective action, then proceed on limited production for unsatisfactory laydown in accordance with Article 610-12. Proceeding on limited production is based upon the Contractor's initial evaluation of the straightedge test results and shall begin immediately upon obtaining those results. Additionally, the Engineer may direct the Contractor to proceed on limited production in accordance with Article 610-12 due to unsatisfactory laydown or workmanship.

Limited production for unsatisfactory laydown is defined as being restricted to the production, placement, compaction, and final surface testing of a sufficient quantity of mix necessary to construct only 2,500 ft of pavement at the laydown width.

Once this lot is complete, the final surface testing graphs will be evaluated jointly by the Contractor and the Engineer. Remain on limited production until such time as acceptable laydown results are obtained or until 3 consecutive 2,500 ft sections have been attempted without achieving acceptable laydown results. The Engineer will determine if normal production may resume based upon the CSI for the limited production lot and any adjustments to the equipment, placement methods, and/or personnel performing the work. Once on limited production, the Engineer may require the Contractor to evaluate the smoothness of the previous asphalt layer and take appropriate action to reduce and/or eliminate corrective measures on the final surface course. Additionally, the Contractor may be required to demonstrate acceptable laydown techniques off the project limits prior to proceeding on the project.

If the Contractor fails to achieve satisfactory laydown results after three consecutive 2,500 ft sections have been attempted, cease production of that mix type until such time as the cause of the unsatisfactory laydown results can be determined.

As an exception, the Engineer may grant approval to produce a different mix design of the same mix type if the cause is related to mix problem(s) rather than laydown procedures. If production of a new mix design is allowed, proceed under the limited production procedures detailed above.

After initially proceeding under limited production, the Contractor shall immediately notify the Engineer if any additional lot on the project requires corrective action. The Engineer will determine if limited production procedures are warranted for continued production.

If the Contractor does not operate by the limited production procedures as specified above, the 5 lots, which require corrective action, will be considered unacceptable and may be subject to removal and replacement. Mix placed under the limited production procedures for unsatisfactory laydown will be evaluated for acceptance in accordance with Article l05-3.

The pay adjustment schedule for the Cumulative Straightedge Index (CSI) test results per lot is in Table 610-8.

TABLE 610-8
PAY ADJUSTMENT SCHEDULE FOR CUMULATIVE STRAIGHTEDGE INDEX
(Obtained by adding SE Index of up to 25 consecutive 100 ft test sections)

CSI[A]	Acceptance Category	Corrective Action	Pay Adjustment Before Corrective	Pay Adjustment After Corrective Action
0-0	Acceptable	None	$300 incentive	None
1-0 or 2-0	Acceptable	None	$100 incentive	None
3-0 or 4-0	Acceptable	None	No Adjustment	No Adjustment
1-1, 2-1, 5-0 or 6-0	Acceptable	Allowed	$300 disincentive	$300 disincentive
3-1, 4-1, 5-1 or 6-1	Acceptable	Allowed	$600 disincentive	$600 disincentive
Any other Number	Unacceptable	Required	Per CSI after Correction(s) (not to exceed 100% Pay)	

A. Either Before or After Corrective Actions

Correct any deviation that exceeds a 0.4" blanking band such that the deviation is reduced to 0.3" or less.

Corrective actions shall be performed at the Contractor's expense and shall be presented for evaluation and approval by the Engineer prior to proceeding. Any corrective action performed shall not reduce the integrity or durability of the pavement that is to remain in place. Corrective action for deviation repair may consist of overlaying, removing and replacing, indirect heating and rerolling. Scraping of the pavement with any blade type device will not be allowed as a corrective action. Provide overlays of the same type mix, full roadway width, and to the length and depth established by the Engineer. Tapering of the longitudinal edges of the overlay will not be allowed.

Corrective actions will not be allowed for lots having a CSI of 4-0 or better. If the CSI indicates Allowed corrective action, the Contractor may elect to take necessary measures to reduce the CSI instead of accepting the disincentive. Take corrective actions as specified if the CSI indicates Required corrective action. The CSI after corrective action shall meet or exceed Acceptable requirements.

Where corrective action is allowed or required, the test section(s) requiring corrective action will be retested, unless the Engineer directs the retesting of the of the entire lot. No disincentive will apply after corrective action if the CSI is 4-0 or better. If the retested lot after corrective action has a CSI indicating a disincentive, the appropriate disincentive will be applied.

Test sections and/or lots that are initially tested by the Contractor that indicate excessive deviations such that either a disincentive or corrective action is necessary, may be re-rolled with asphalt rollers while the mix is still warm and in a workable condition, to possibly correct the problem. In this instance, reevaluation of the test section(s) shall be completed within 24 hours of pavement placement and these test results will serve as the initial test results.

Incentive pay adjustments will be based only on the initially measured CSI, as determined by the Engineer, prior to any corrective work. Where corrective actions have been taken, payment will be based on the CSI determined after correction, not to exceed 100% payment.

Areas excluded from testing by the N.C. Hearne Straightedge will be tested by using a non-mobile 10-ft straightedge. Assure that the variation of the surface from the testing edge of the straightedge between any 2 contact points with the surface is not more than 1/8". Correct deviations exceeding the allowable tolerance in accordance with the corrective actions specified above, unless the Engineer permits other corrective actions.

Furnish the North Carolina Hearne Straightedge(s) necessary to perform this work. Maintain responsibility for all costs relating to the procurement, handling, and maintenance of these devices. The Department has entered into a license agreement with a manufacturer to fabricate, sell, and distribute the N.C. Hearne Straightedge. The Department's Pavement Construction Section may be contacted for the name of the current manufacturer and the approximate price of the straightedge.

The current manufacturer of the Hearne Straightedge is listed below.

Manufacturer	Phone/Fax	Shipping Address	Mailing Address
Myers Tool and Machine	336-956-1324 336-956-1169 (Fax)	156 Dixon Street Lexington, NC 27295	P. O. Box 219 Linwood, NC 27299

11.1.2 Calibration of the Hearne Straightedge

The straightedge must be operated over a calibration a strip at the beginning and end of each day's testing operations. The purpose of calibration is to ensure the straightedge is recording both vertical deviations and horizontal distances accurately. The calibration strip will consist of a 100 foot section of pavement that is reasonably level and smooth on which plywood or other approved sheets of known dimensions are placed at known intervals.

Items needed to prepare the calibration strip include: 100 foot measuring device, two sheets of 2' x 4' x ¼" approved material, one sheet of 2' x 4' x ½" approved material, and marking paint, chalk, or crayon. Note that the three sheets can be exterior plywood, Plexiglas, plastic, aluminum or other approved material. The approved material should be kept in a protected location so it will remain flat and not warp. For approval of other material than those mentioned above contact the Pavement Construction Section.

To set up the calibration strip, the plywood sheets should be placed at exactly 50 foot intervals as shown in Figure 11-1. The profile of this strip (profilograph) is then obtained with the straightedge using normal testing procedures. The profilograph of the calibration strip will indicate the profiles of the three approved sheets superimposed on the pavement surface profile. The shape of the graph should reflect the thickness of the plywood sheets and all horizontal distances, including the two foot widths of the plywood. The distance from the first to last sheet of plywood should be 100 ft. (approximately 4 inches on the graph) If the recorded distance on the graph is not within 1/4" of 4" then either the recording wheel is worn and should be replaced or the graph paper is not feeding properly into the recorder. The 1/4" and 1/2" sheet thickness should be represented exactly on the graph. If the thickness is not recorded accurately, the linkage between the recording wheel and pen is not operating correctly, and will require adjustment or repair. The Contractor should ensure that the straightedge is operating correctly before testing is conducted. If the end of day calibration strip indicates that the straightedge is not recording accurately, all necessary adjustments or repairs shall be made, and all test sections since the last acceptable calibration strip must be retested.

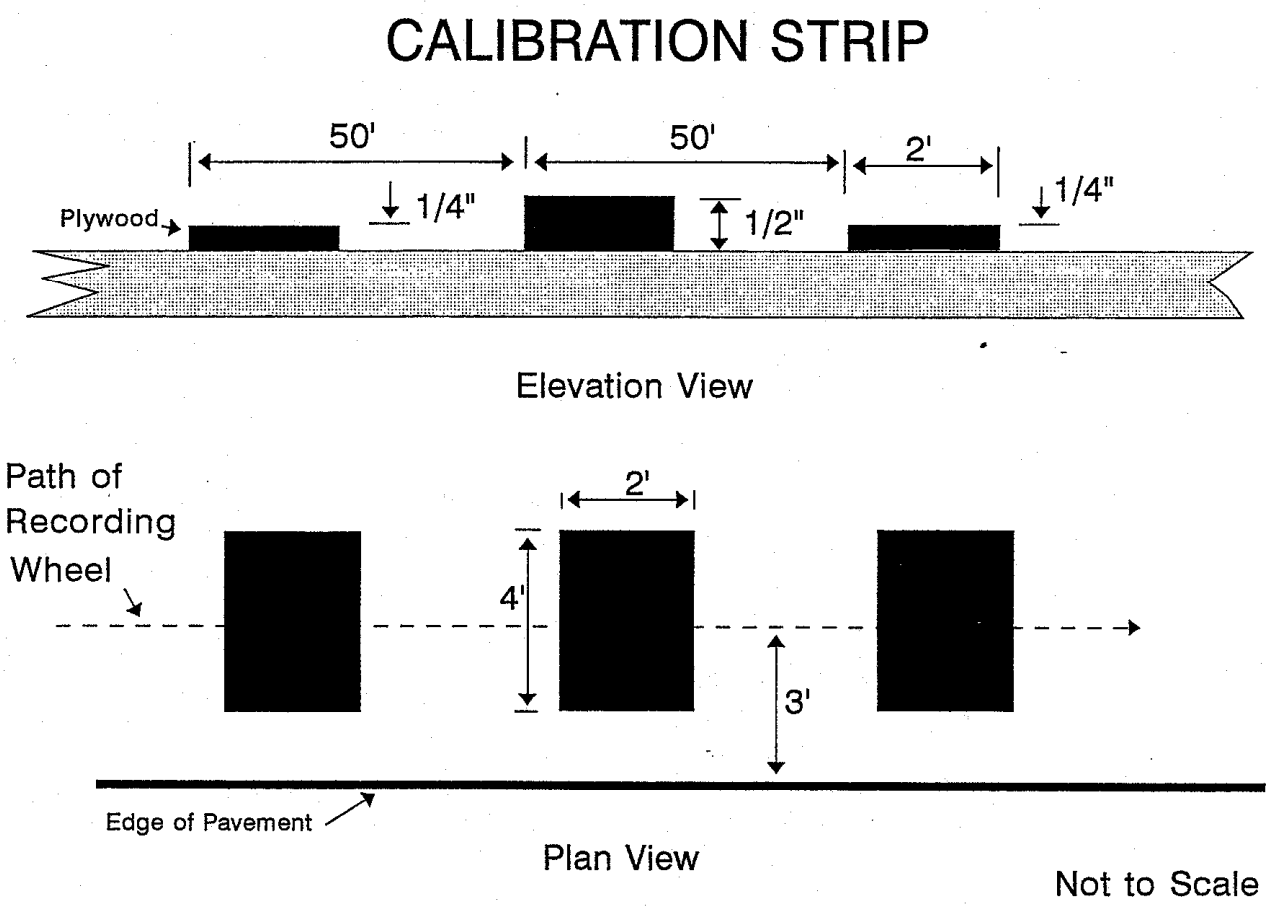

Figure 11-1

11.1.3 Determination of the Cumulative Straightedge Index

Profiles are taken and recorded on graphs for the entire length of travel lane pavement exclusive of -Y- line travel lanes less than or equal to 1000 feet in length, turn lanes less than or equal to 1000 feet in length, structures, approach slabs, paved shoulders, loops, tapers and other irregular areas. Full width acceleration or deceleration lanes, -Y- line travel lanes greater than 1000 feet in length, ramps greater than 1000 feet in length, full width turn lanes greater than 1000 feet in length, and collector lanes will also be tested in accordance with the "Final Surface Testing - Asphalt Pavements" specification. Ramps may be combined with the adjoining acceleration/deceleration lanes for testing purposes, subject to the Engineer's approval. Turn lanes and collector lanes shall be tested for the entire length of full width pavement.

When a bridge is encountered on the project, the pavement should be rolled up to the point where the front wheel is on the approach slab. When coming off of a bridge, rolling should begin at the point where the rear wheel is on the joint at the approach slab. While deviations at the bridge approach slabs are not counted, they are subject to meeting the requirements of the non-mobile 10 foot straightedge.

The contractor has the option of rolling either the left wheel path or the right wheel path for lanes adjacent to curb and gutter, expressway gutter, or shoulder berm gutter. Rolling of the left wheel path is only allowed for test sections where the lane is directly adjacent to either the curb and gutter, expressway gutter, or shoulder berm gutter. Only one wheel path should be rolled for each lane.

The graph from the North Carolina Hearne Straightedge may be read by use of either a desktop reader box specifically designed for this purpose or by use of appropriate blanking bands printed on

transparency paper. Contractors may purchase the reader box from the manufacturer of the N. C. Hearne Straightedge, whereas the Department will furnish reader boxes to DOT field personnel. Both the Contractor and DOT field personnel may obtain blanking bands printed on transparency paper from the NCDOT Pavement Construction Section. The Contractor shall furnish each day's graph and appropriate QA/QC-7 form to the Engineer within 24 hours after the profiles are taken. The graph is first prepared for evaluation by marking station numbers in 100 foot increments. Actual station numbers should be shown on the graph; for example, 0+00, 1+00, 2+00, etc. Each 100 foot test section will be evaluated separately with 25 consecutive test sections being accumulated to evaluate a lot.

Three different blanking bands are used to evaluate the graph. The widths of these blanking bands are 0.2", 0.3", and 0.4". The graph is first evaluated using the 0.2" band; next, the 0.3" band; and lastly with the 0.4" band. Each blanking band is placed over a 100 foot test section graph such that it covers as much of the pavement profile line as possible. Each band may be maneuvered, both vertically and diagonally, as needed, to accomplish this. Care should be taken in any attempted diagonal movement of the reader box blanking bands since these were not intended to be moved diagonally. Once a blanking band position is selected, the total test section length must be read with the band in that position. The blanking band must be placed at the same vertical location at the beginning of a test section, as it was located at the end of the last adjoining test section. The graphs should be viewed from directly above and perpendicular to the graph for evaluation.

Double peaked or multiple peaked deviations which do not go back into the blanking band are only counted once (See Figure 11-4). Spikes are very sharp, almost vertical deviations, showing very little, if any, "white area". Spikes are not counted since these are normally an indication of rocks or dirt on the pavement (See Figure 11-5). If a deviation occurs at the end of a test section, count the deviation only once. Place the deviation in the 100 foot test section where the peak is the highest (See Figure 11-6). There may also be obvious deviations that may not be counted, such as manholes, valve boxes, etc. These should be marked on the graph by the operator at the time of testing, along with any other pertinent comments. While deviations of this type are not counted, they are subject to meeting the requirements of the non-mobile 10 foot straightedge.

The Straightedge Index (SEI) is a number determined by evaluating the graph using 0.2" and 0.3" blanking bands. This SEI indicates the number of deviations that exceed the 0.2" band and the 0.3" band within each 100 foot test section. The number of 0.4" blanking band deviations are not indicated in either the SEI or the CSI numbers, but they are included in the 0.2" and 0.3" deviations. The Cumulative Straightedge Index (CSI) is a number representing the total of the SEIs for one lot which consists of 25 consecutive 100 foot test sections.

To determine the SEI, the 0.2" blanking band is first placed over a 100 foot test section. All deviations in excess of the 0.2" blanking band, both above and below the band, will be counted. Deviations must be significant enough to show "white areas" outside the blanking band in order to be counted. Mark each deviation exceeding the 0.2" band with a short vertical line (tick mark) just above the peak of the deviation. The number of deviations exceeding the 0.2" blanking band in a 100 foot test section will be the first number of the Straightedge Index (SEI).

The 0.3" blanking band is then placed over the 100 foot test section and all deviations exceeding this blanking band will be counted. Again, include all deviations both above and below the blanking band, with only deviations showing "white areas" outside the blanking band being counted. Mark each deviation exceeding the 0.3" blanking band with another short vertical tick mark placed just to the right of the tick mark for the corresponding 0.2" deviation. The number of deviations exceeding the 0.3" blanking band in a 100 foot test section will be the second and final number of the SEI. The SEI for each 100 foot test section should be written above that same test section and circled.

In Figure 11-2, **(NOT TO SCALE)** there are 2 deviations that exceed the 0.2” blanking band and 1 that exceeds the 0.3” blanking band; resulting in a SEI of 2-1.

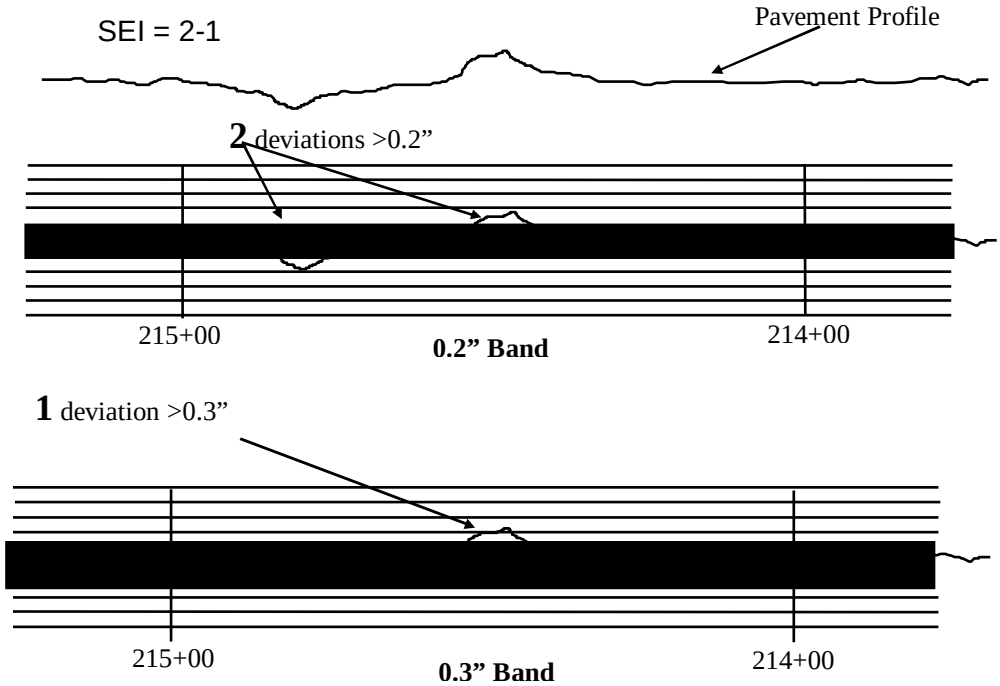

Figure 11-2

In Figure 11-3, **(NOT TO SCALE**) there is one deviation in excess of the 0.2” blanking band and none that exceed the 0.3” blanking band; resulting in a SEI of 1-0.

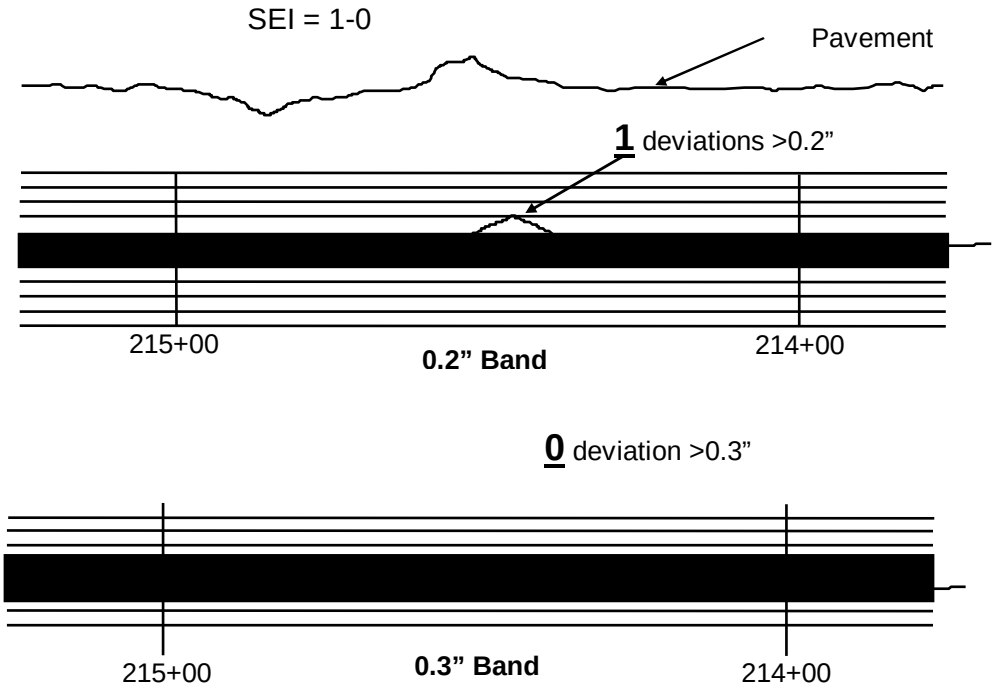

Figure 11-3

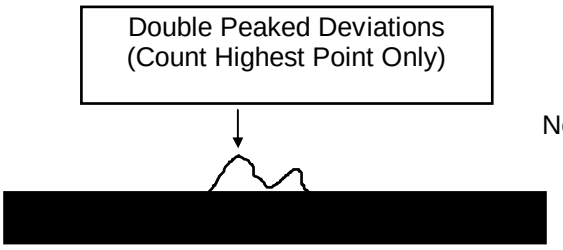

Figure 11-4

(Not to Scale)

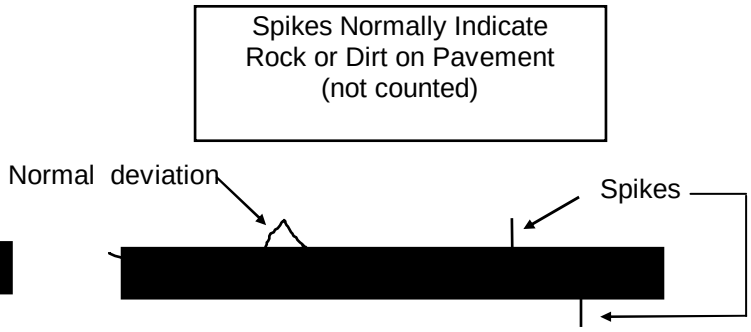

Figure 11-5

(Not to Scale)

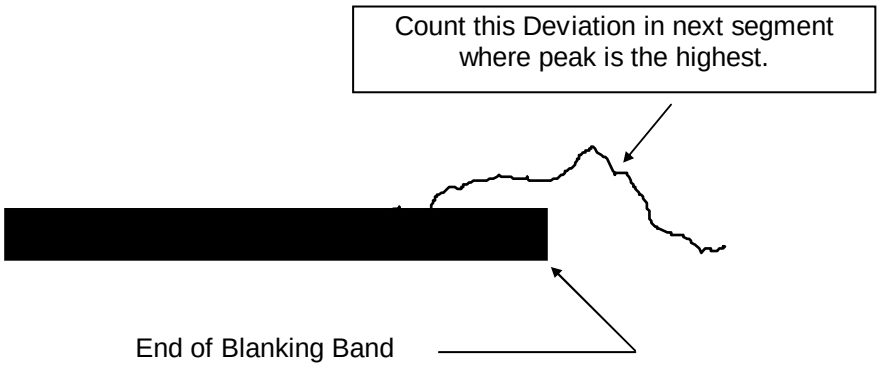

Figure 11-6

(Not to Scale)

The 0.4" blanking band is now placed over the 100 ft. test section to check for "must correct" deviations. All deviations exceeding the 0.4" blanking band should be marked with another short vertical tick mark just to the right of the corresponding 0.3" deviation mark. Only deviations showing "white area" on either side of the blanking band will be marked. All deviations exceeding the 0.4" blanking band must be corrected in accordance with the provisions of the specifications (equal to or less than 0.3”). These 0.4" deviations do not change the initial SEI determined using the 0.2" and 0.3" blanking bands.

Test sections will normally be evaluated between even 100 ft. station numbers: for example: 1+00 to 2+00. However, there may be partial test sections that occur either at the beginning or ending of lanes, projects, bridges; or on acceleration or deceleration lanes, ramps, turn lanes or collector lanes. For example, the beginning station on a project is 1+12. It is recommended to make a partial test section from Station 1+12 to 2+00. Another example would be a lane ending at Station 20+55 which means that a 55 ft. test section is left at the end. These partial test sections will be tested, evaluated, and a SEI determined. This SEI will be included in the applicable CSI as if it were a full test section. This may occur at the beginning or end of a project, the beginning or ending of a bridge, on acceleration or deceleration lanes, on ramps, on turn lanes, or on collector lanes, but in all cases will be handled the same as described above.

Partial end of the day test sections less than 100 ft. will be carried forward and evaluated with the next day’s production, unless it occurs on the last day’s production which was covered above. In these cases, the straightedge should be stopped on the last even 100 ft. station number each day with the

straightedge rolling process resumed at that point on the following day's production. For example: If paving stops at Station 88+45 one day, the straightedge testing would stop at Station 88+00 and resume at Station 88+00 the following day.

Form QA/QC-7 is used to compile the SEIs and determine the CSI for a 2500 foot lot or partial lot. An example of this form is shown in Figure 11-7. A QA/QC-7 form with numbered instructions is also included in Section 11 of this manual. The 0.2" deviations and 0.3" deviations are added separately, with these two totals forming the Cumulative Straightedge Index (CSI). The 0.2" deviations are added first and the result recorded. Do not carry over, as done in normal addition, instead record the total number of 0.2" deviations. Repeat this process for the 0.3" deviations. In Figure 10-7, the total SEIs for 0.2" deviations is 10 and the total for 0.3" deviations is 3. The CSI for that lot is 10-3. The total 0.3" deviations must be equal to or less than the total 0.2" deviations within a lot.

Pavement will be accepted on a lot by lot basis. A lot will normally consist of 25 consecutive test sections as described previously, except that separate lots will be established for each travel lane, unless otherwise approved by the Engineer. For example, if two adjoining travel lanes were paved from the beginning of the project, Station 0+00, to the end of the project, Station 24+50, these would normally be tested as two separate lots, unless otherwise approved by the Engineer. If the Contractor would request to continue the lot of the first lane paved to include the first 50 ft. of the second lane, the Engineer should evaluate such a request and approve or disapprove it to the best of his judgment. In addition to the above specified lots, full width acceleration or deceleration lanes, ramps, collector lanes & turn lanes will be evaluated as separate lots and not included with travel lanes.

Once the CSI for a lot or partial lot has been determined, it will be compared to the specification requirements to see which pay adjustment, if any, is applicable or if corrective actions are necessary.

If after the placement of a pavement layer, a lot is less than 2500 ft., any applicable incentive shall be prorated over that section. For example, if a lot were 1250 ft. in length with a CSI of 1-0, an incentive of $50 would be paid for that partial lot. This is determined by dividing the actual test section length of 1250 ft. by 2500 ft. and multiplying that result times the incentive of $100, which would have been the incentive for a full section with a CSI of 1-0. Partial lots for normal travel lanes, acceleration or deceleration lanes, ramps, collector lanes & turn lanes will all be prorated according to this procedure. Any disincentive for partial lots of any type shall be applied in full and shall not be prorated, regardless of length.

Test sections and/or lots that are initially tested by the Contractor which indicate excessive deviations such that either a disincentive or corrective action is necessary, may be rerolled with asphalt rollers, while the mix is still warm and in a workable condition, to possibly correct the problem. No other corrective action will be permitted at that time. If the area is rerolled, retesting of the area in question must be within 24 hours of pavement placement and shall begin at the last even 100 foot station number prior to the area to be retested. For example: if the Contractor elected to reroll a section of pavement between Sta. 21+60 and Sta. 24+10 with the asphalt rollers, the retesting of that area should begin at Sta. 21+00. The graph for the retested area(s), with appropriate remarks on it, must be submitted to the Engineer for evaluation and acceptance. In this case, both the Contractor and the Engineer evaluating the graph should enter the SEI after retesting as the initial results on the QA/QC-7 Form.

If the final graph indicates "must correct" deviations in excess of 0.4" exists, appropriate corrective actions shall be performed by the Contractor. Where corrective action is performed, the lot will be retested and accepted provided that the retesting shows the lot to have an "Acceptable" CSI. If the CSI is 4-0 or better, no rideability incentive or disincentive will be applied to that lot. If after the corrective action, the retesting indicates a CSI that warrants a disincentive (CSI of either 1-1, 2-1, 3-1, 4-1, 5-0, 5-1, 6-0 or 6-1), the appropriate disincentive will be applied for that lot. If after initial corrective actions are taken, the retesting indicates that further corrective actions are required, the Contractor shall take whatever measures

necessary to obtain an “Acceptable” CSI. All corrective actions, except those for minor deviations, shall have the prior approval of the Engineer. The CSI obtained after the final corrective action will determine the pay factor for that lot, not to exceed 100%.

12/17/2002

NORTH CAROLINA DEPARTMENT OF TRANSPORTATION

QA/QC-7

DIVISION OF HIGHWAYS

N.C. Hearne Straightedge Summary

Project No.: 8.1234567 Route: I-40 Division: 7

Type Mix: S 12.5 C Lane: WBL Rt Profile Location: Outside Wheelpath

Paving Contractor: Old Smoothie Paving S.E. Operator: C. D. Bumps

Date	T.S. #	Beg. Station No.	End. Station No.	S.E.I.	0.4" Dev.	Retest SEI	Comments
9/21/2002	1	1+12	2+00	3-2	1	2-0	0.4" @ 1+32
9/21/2002	2	2+00	3+00	1-0		0-0	
9/21/2002	3	3+00	4+00	0-0		0-0	
9/21/2002	4	4+00	5+00	0-0		0-0	
9/21/2002	5	5+00	6+00	0-0		0-0	
9/21/2002	6	6+00	7+00	0-0		0-0	
9/27/2002	7	7+00	8+00	1-0		0-0	
9/27/2002	8	8+00	9+00	0-0		0-0	
9/27/2002	9	9+00	10+00	0-0		0-0	
9/27/2002	10	10+00	11+00	0-0		0-0	
9/27/2002	11	11+00	12+00	0-0		0-0	
9/27/2002	12	12+00	13+00	1-0		0-0	
9/27/2002	13	13+00	14+00	0-0		0-0	
9/27/2002	14	14+00	15+00	0-0		0-0	
9/28/2002	15	15+00	16+00	0-0		0-0	
9/29/2002	16	16+00	17+00	1-0		1-0	
9/29/2002	17	17+00	18+00	0-0		0-0	
9/29/2002	18	18+00	19+00	0-0		0-0	
9/29/2002	19	19+00	20+00	1-0		0-0	
9/29/2002	20	20+00	21+00	2-1	1	1-0	0.4" @ 20+48
9/29/2002	21	21+00	22+00	0-0		0-0	
9/30/2002	22	22+00	23+00	0-0		0-0	
10/1/2002	23	23+00	24+00	0-0		0-0	
10/2/2002	24	24+00	25+00	0-0		0-0	
10/3/2002	25	25+00	26+00	0-0		0-0	
			C.S.I.	10-3	C.S.I.	4-0	

Note 1:
Resident Engineer to furnish gold copy to M&T Unit upon completion of Federal Aid Projects only.

*Note 2:
Contractor Must be notified by letter of any Pay Adjustments or Corrective Actions.

*Print Name Legibly: U. Ride Goode

*Evaluators Signature: U. Ride Goode

*BY PROVIDING THIS DATA UNDER MY SIGNATURE AND/OR HiCAMS NUMBER, I ATTEST TO THE ACCURACY AND VALIDITY OF OF THE DATA CONTAINED ON THIS FORM AND CERTIFY THAT NO DELIBERATE MISREPRESENTATION OF TEST RESULTS, IN ANY MANNER, HAS OCCRRED.

CC:
White: Resident Engineer
Yellow: Pavement Construction Engineer
Pink: Division Engineer
Gold: Resident Engineer(See Note 1)

Resident/District Engineers Certification	Check One
Block	☐
$300 Incentive	☐
$100 Incentive	☐
Acceptable	☐
*$300 Disincentive	☐
*$600 Disincentive	☐

Resident/District Engineer: May B. Knott, P.E.

Remarks:
0.4" deviations repaired @ Sta's 1+32 & 20+48

Section 12

RECORDS AND REPORTS

12.1 RECORDS AND REPORTS – GENERAL

One of the most important functions of both QC and QA Technicians is to keep accurate records and reports. Records and reports are necessary to determine compliance with contract requirements and to document payments to the Contractor.

The Technician is furnished standard forms for routine reporting which may require daily, weekly, or monthly reporting, depending on the data to be submitted. These reports must always be completed in entirety. In addition to the standard forms, the Technician, both QA and QC should keep a written narration in a permanent field record (diary) of the principal activities that occur. The record should contain all information concerning the work being inspected, including information such as weather conditions, important conversations, visitors on site, verbal orders received, unusual incidents, equipment breakdowns, length of work stoppages, number of personnel and types of equipment affected by work stoppages. If an item seems unusually important, it should be recorded and analyzed in sufficient detail to make it fully understandable at some later date.

The importance of entries listed on records and reports or in the Technician's diary cannot be over-emphasized. The information recorded may never be needed or reviewed, but, if it is ever needed, it will be extremely useful. This information may serve as a reference for performance of similar future work, a reference in the event of legal action or litigation by any affected party, and, possibly most important, a source of clues for investigators in the event the job fails.

Most forms and reports will be assigned a QC, QA, QA/QC or QMS form number. QC forms will be used only by the Contractor's quality control personnel, QA forms only by the Department's quality assurance personnel, QA/QC and QMS forms will be used at times by both parties. The Department will furnish all QC, QA, QA/QC and QMS forms. The Division QA Supervisor is responsible for distributing all needed forms to the Contractor and maintaining a reasonable supply at the Division QA Lab.

The Contractor's QC data must be submitted on Department approved forms. The data may be in printed or handwritten form.

Beginning in 2010, QA and QC data was entered into a Quality Assurance Program (QAP). The data was logged into a database within the Department's Hicams application. There is now a web interface for the Contracting Industry to access this application to enter their "raw" test data from each QC Laboratory. During 2010 transition period, the QA Laboratories submitted QC and QA Test results just as they had with the previously used QMS Spreadsheets.

Beginning with 2011, QC & QA Laboratories will have to submit their test results into the QAP database via the web interface. This web interface is found at the following web address:

https://apps.dot.state.nc.us/Vendor/QAP

There is also a link from the Materials & Tests Unit's website which is found at:

http://www.ncdot.org/doh/operations/materials/asphalt/

In order to access this portal, you have to register and receive an NCID and password.

Once the test data / results are submitted into the QAP, test reports and graphs will be available for viewing and / or printing.

12.2 RECORDS AND REPORT DOCUMENTATION

The Contractor shall document all observations, records of inspection, samples taken, adjustments to the mix, and test results on a daily basis. Results of observations and records of inspection shall be noted as they occur in a permanent field record. Adjustment to mix production and test results shall be recorded on forms provided by the Engineer. The Contractor shall maintain on a daily basis copies of all test worksheets, the "Moving Average Calculation Sheet" for gradation, % AC, and mix properties and all control charts as specified in the "Quality Management System, Asphalt Plant Mix Pavements" Specification. **There should be no erasures, whiteout or other similar means used to correct an error on any field record entries, test worksheets, or any other QMS forms. Entries that have been made in error on any QMS form should be struck through with a single line and the initials of the individual voiding the entry noted. Corrected entries should be placed immediately above the voided entry.**

All such records shall be made available to the Engineer, upon request, at any time during project construction. All QC records and forms shall be completed and distributed in accordance with the most current edition of the Department's "HMA/QMS Manual". The Contractor shall maintain all required QC records by day's production for each plant site in a well-organized manner such that these records may be easily reviewed.

Failure to maintain QC records and forms as required, or to provide these records and forms to the Engineer upon request, may result in production stoppage until the problem is resolved.

12.3 RETENTION OF QMS FORMS

All QMS forms and reports shall be completed and distributed in accordance with the following detailed instructions for each form. The Contractor's QC forms, with required supporting documents, shall be retained by the Contractor for at least three (3) years after completion of the forms. For required supporting documentation, reference should be made to the instructions for each individual form contained in the remainder of this section. The Department's QA forms shall be stored indefinitely by the QA Labs unless permission is given otherwise. The Materials & Tests Asphalt Lab may be contacted for any questions and/or guidance concerning retention time for each individual form.

12.4 FALSIFICATION OF RECORDS

Falsification of test results, documentation of observations, records of inspection, adjustments to the process, discarding of samples and/or test results, or any other deliberate misrepresentation of the facts will result in the revocation of the applicable person's QMS certification. In addition, state and/or federal authorities may also pursue criminal charges. The Engineer will determine acceptability of the mix and/or pavement represented by the falsified results or documentation. If the mix and/or pavement in question is determined to be acceptable, the Engineer may allow the mix to remain in place at no pay for any asphalt mix, binder, or other mix components. If the mix and/or pavement represented by the falsified results is determined not to be acceptable, it shall be removed and replaced with mix that meets the Specifications. In this case, payment will be made for the actual quantities of materials required to replace the quantities represented by the falsified results or documentation, not to exceed original quantities of the mix removed.

12.5 FORMS AND INSTRUCTIONS

The following pages are copies of all forms and reports to be used, along with detailed instructions on how to complete each form or report. Also included are approved mix design forms and supporting mix design data forms for the Contractor's use in preparing and requesting mix designs. These mix design forms are pre-approved by the Department. Computer generated forms that are the exact same as these are also acceptable. The Department also has available, at no charge, a Mix Design spreadsheet that will generate these forms. If a copy of this spreadsheet is desired, contact the Asphalt Design Engineer, M&T Unit, 1801 Blue Ridge Rd., Raleigh, N.C., or phone (919) 329-4060 or also may be downloaded from the web site:

https://connect.ncdot.gov/resources/Materials/Pages/default.aspx

SUMMARY OF ALL QMS FORMS WITH INSTRUCTIONS

	QA/QC FORMS	PAGE
QA/QC-1	Hot Mix Asphalt QC Test Worksheet (G_{mm} by Rice Test)	12-6
QA/QC-1A	Hot Mix Asphalt QC Test Worksheet (G_{mm} by CoreLok Method)	12-10
QA/QC-3	Determination of Asphalt Draindown Characteristics	12-14
QA/QC-4	Rice Test Dry Back Correction Factor Worksheet	12-16
QA/QC-5	Roadway Core Sample Worksheet	12-18
QA/QC-5A	CoreDry Core Sample Density Determination Worksheet	12-20
QA/QC-5B	Oven Dry Core Sample Density Determination Worksheet	12-22
QA/QC-6	HMA Quality Control Chart	12-24
QA/QC-7	Straightedge Summary Sheet	12-26
QA/QC-8	Daily Paving Operation Evaluation Form	12-28
M&T 612	TSR Worksheet	12-30
Graph	0.45 Power Chart	12-31
	QC FORMS	
QC-1	Daily HMA Quality Control Certification	12-32
QC-2	Scales Calibration Worksheet	12-34
QC-3	Anti-Strip Log Sheet	12-36
QC-4	Gradation Moving Average Worksheet	12-38
QC-5	Daily Core Sample Location & Lot Summary	12-40
QC-6	Mix Properties Moving Average Worksheet	12-44
QC-7	Sample Tags	12-46
QC-9	QC Random Mix Sample Location Worksheet	12-48
QC-11	Mix Verification Checklist	12-50
	QA FORMS	
QA-1	Asphalt Quality Assurance Summary Report	12-54
QA-2	HMA Acceptance Certification	12-56
QA-2A	Mix Deficiency Pay Factor Form	12-58
QA-2B	Density Deficiency Pay Factor Form	12-60
QA-3	QA Sample Log	12-62
QA-4	QA Inspection of QC Plant and Laboratory Facilities	12-64
QA-5	Report of QA Core Sample Density Results	12-66
	DENSITY GAUGE REPORTS	
M&T 514 QA/QC	Control Strip Density	12-68
M&T 515 QA	QA Density Gauge Test Section Report	12-70
M&T 516 QC	QC Density Gauge Test Section Report	12-73
	ROADWAY INSPECTION REPORT	
M&T 605	Asphalt Roadway Inspector's Daily Report	12-76
	QMS (OJT) CHECKLISTS	
QMS-3	QMS Level I Plant Technician OJT Program Checklist	12-80
QMS-5	QMS Roadway Technician OJT Program Checklist	12-91
QMS-6	Job Mix Formula Change Request Form	12-104
QMS-7	Asphalt Plant Scale Verification Form	12-106

INDEX

A

PAGE NO

Asphalt Binder Content By Ignition Method 7-41
Acceptance of Mix for Density 10-64
Acceptance Based on Mix Testing... 7-84
Aggregate Angularity 2-14
Aggregate Cold Feed Systems..... ....6-3 & 6-4
Aggregate Consensus Properties Tests 2-14
Aggregate Consensus Properties (Table 1012-1) ……2-15
Aggregate Gradation & Size 2-13
Aggregate Gradation Specification (Table 1005-1). 2-16
Aggregate Quality..... 2-13
Aggregate, RAP & RAS Sampling 7-26
Aggregate Scales Check (Batch Plant)..... 6-14
Aggregate Scales Check (Drum Plant) ....6-27 & 6-28
Aggregate Sources... 2-12
Aggregate Storage.... ....6-2 & 6-3
Allowable Mix Adjustments 7-20
Allowable Resampling & Retesting for Mix Deficiencies ....7-78 & 7-79
Angularity, Coarse & Fine Aggregate 2-14
Anti-Strip Additive 2-6
Anti-Strip Additive Introduction..... ....5-8 & 5-9
Asphalt Additives 2-6
Asphalt Binder Diagnostic Chart..... ....A-8
Asphalt Binder Grades..... 2-9
Asphalt Binder Storage & Handling 6-1
Asphalt Binder Properties..... 2-6
Asphalt Binder Meter (Batch Plant).. ....6-14 & 6-15
Asphalt Binder Meter Calibration (Drum Plant) ....6-29 thru 31
Asphalt Binder Meter System (Drum Plant) . ... …….6-29
Asphalt Binder Storage..... 2-7
Asphalt Distributor..... 9-2
Asphalt Flash Point... 2-7
Asphalt Lab Equipment Calibrations ....7-5 thru 7-7
Asphalt Mix Components……2-1, 4-1
Asphalt Mix Design Procedures……4-9
Asphalt Mix Types..... ....3-3, 4-17
Asphalt Pavement Control Strips – Density Gauge (QC).... ....10-31 thru 10-37
Asphalt Pavement Control Strips – Core (QC)..... ....10-50 thru 10-53
Asphalt Pavement Structure Design 3-1
Asphalt Paver 9-18
Asphalt Materials 2-2
Asphalt Placing Operations... 9-24
Asphalt Plant Certification..... 5-1

PAGE NO

Asphalt Plant Checklist ..... 5-4 thru 5-6
Asphalt Plant Pollution Control Equipment 6-38
Asphalt Plant Scale and Meter Calibration (Batch Plant) 6-14
Asphalt Plant Types 5-1
Asphalt Rollers ..... 9-36 thru 9-38
Asphalt Technician Certification Program ..... 1-6 thru 1-10
Asphalt Technician Certification Flowchart 1-12
Asphalt Temperature - Volume Relationship ..... 2-10 & 2-11
Augers ..... 9-18 & 9-19
Automatic Control of Proportioning and Mixing 6-13, 6-38
Automatic Screed Controls and Operations 9-29

B

Batch Plant Operation and Components ..... 5-5 & 5-6
Batch Plant Operations 6-9
Batch Plant Scale Calibration 6-14
Batch Weights ..... 6-16,6-22 thru 6-25
Binder Contents 3-5
Binder Grades ..... 2-3 & 2-9
Breakdown Rolling ..... 9-46 & 9-47

C

Calculating Batch Weights ..... 6-22 thru 6-25
Calculations ..... 7-73 thru 7-77
Calibrating Lab Equipment ..... 7-5 thru 7-7
Certification of Asphalt Plants 5-1, 5-2
Certification Requirements (Technicians) ..... 1-7 & 1-10
Check Core Samples 10-59
Classification of Asphalt Types ..... 2-2 thru 2-4
Class Enrollment Procedures 1-11
Clay Content ..... 2-13 & 2-14
Coarse Aggregate Angularity 2-14
Cold Feed Blend Ratio Calibration ..... 6-5 thru 6-7
Cold Feed Systems ..... 6-3 & 6-4
Compaction 9-34
Compensation for Recycled Mix 8-7
Components of Asphalt Mixes 2-1, 4-1
Computer Program, Mix Design Spreadsheet 4-11
Computer Program, QMS Spreadsheet 11-1
Control Chart Example 7-25
Control Limits (Mix) 7-22
Control Strip, Contractor (QC) ..... 10-31 thru 10-37
Control Strip, Core Samples 10-33
Control Strip, Department (QA) 10-46

PAGE NO

Core Lok Test Procedure (Compacted Mix Bulk Specific Gravity) …… 7-60
Core Lok Test Procedure (Maximum Specific Gravity) …… …….. 7-55 thru 7-57
Core Sample Numbering (QC)..... ....10-50 & 10-51
Core Sample Specific Gravity Determination..... ....7-58 & 7-59
Core Samples, Random Locations .. ..10-54 thru 10-57
Corrective Actions/Mix Problems ....7-22 & 7-23
Cumulative Straightedge Index (CSI)..... ....11-6 & 11-7

D

Definitions of Asphalt Terminology A-1
Delivery & Acceptance of Asphalt Materials ....2-7 thru 2-9
Density Acceptance 10-64
Density Control Procedures 10-24
Density Gauge (QC) Control Procedures..... 10-31
Density Gauge Standard Counts …… 10-36 & 10-38
Density Test Sections ....10-38 thru 10-40
Density Testing Methods 10-13
Design Criteria ....4-12 thru 4-13
Design of Asphalt Pavement Structures ....3-1 & 3-2
Design of Hot Mix Asphalt Mixtures 4-1
Determining Number of Test Sections 10-41
Distributor 9-2
Distributor Spray Bar. 9-2, 9-3
Documentation ……11-2
Draindown Test (Uncompacted Asphalt Mixtures) .. .. ……..7-70 thru 7-72
Drum Mix Plant Operation and Components ....5-8 & 5-9
Drum Mixer Dryer..... 6-32
Drum Plant - Asphalt Binder Meter System.. ....6-29 thru 6-31
Drum Plant - Moisture Test ... .7-36 & 7-37
Drum Plant - Weight Measurement of Aggregate ... .6-27 & 6-28
Drum Plant Cold Feed System..... 6-26
Drum Plant Operations 6-26
Drum Plant Specification Requirements 5-9
Drum Plant Surge - Storage Bins..... ....6-32 & 6-33
Drum Plant Vibratory Scalping Screen..... 6-26

E

Emulsified Asphalts .. ..2-3, 2-4, & 2-10
Enrollment Procedures for NCDOT QMS Asphalt Classes 1-11

PAGE NO

F

Failure to Stop Production
--Mix 7-23
Falsification of Records 11-2
Field Laboratory..... 7-2
Field Laboratory Equipment List ..... 7-3 & 7-4
Field Laboratory Equipment Calibrations ..... 7-5 thru 7-7
Field Procedure for Gyratory Test Method ..... 7-47 thru 7-50
Field Mix Verification ..... 7-18 & 7-19
Final Surface Testing 11-3
Fine Aggregate Angularity..... 2-14
Finish Rolling 9-47
Flash Point of Asphalt..... 2-7
Flat and Elongated Aggregate Test 2-14
Flowchart for Technician Certifications 1-12
Forms, QMS..... 12-6 thru 12-107
Forms Summary 12-5
Full Test Series (Mix)..... 7-11

G

Gradation Analysis of Aggregates ..... 7-32 thru 7-33
Gradation Analysis of Recovered Aggregate..... 7-38 thru 7-39
Grade Reference Systems for Pavers..... 9-22, 9-29 thru 9-32
Gyratory Field Test Procedure..... 7-47 thru 7-50

H

Handling of RAP/RAS Material 8-5
Handwork..... 9-33
Haul Trucks..... 9-17
Hauling Asphalt Mixtures 6-35
Hot Bin Sampling ..... 6-16 & 6-17
Hot Bin, Determining Percentages..... 6-18 & 6-19
Hot Mix Placing Operations..... 9-24
Hot Mix Recycling 8-1
Hot Mix Recycling Methods..... 8-1

PAGE NO

I

Ignition Test Method (AC Content)... 7-41
Incidental Tools for Paving Operations 9-17
Independent Assurance Samples (IAS) 7-1, 10-79
Instructions for QMS Forms Completion .... 12-6 thru 12-107

J

Job Mix Formulas..... .... 4-10, 4-17, 4-19
Job Mix Formula, Example.... 4-19
Job Mix Formula Numbering System 4-17
Job Mix Formulas, Project File Procedures.. 4-15
Job Mix Formula Request Form (QMS-1) 4-11
Joint Matching Device .... 9-30 thru 9-31

L

Laboratory, Equipment .... 7-3 & 7-4
Laboratory, Equipment Calibrations. .... 7-5 thru 7-7
Laboratory, Field 7-2
Laboratory, Technician Assessment Program…… 1-13 thru 1-15
Layer Depth Guidelines .... 3-4 & 3-5
Lift Thickness Guidelines 3-4
Load Tickets .... 6-34 & 10-4
Loading Trucks (3 Dump Loading)…… ..6-33
Longitudinal Joints .... 9-52 thru 9-55
Loss of Certification 1-10, 11-2
Lot Determination (Density) 10-14
Limited Production
--Density 10-67
--Procedures (Mix – Control Strips) 7-12
--Unsatisfactory Laydown 10-12
Limits of Precision
--Density .... 10-45 &10-62
--Mix Properties 7-80
--Verification (Mix) 7-80

M

Malfunction of Automatic Plant Controls 6-38
Mat Problem Trouble-Shooting Guide..... .... A-10
Mat Slope Gauge 10-11
Material Transfer Vehicle (MTV) 9-22
Max Specific Gravity Test (Gmm Test) .... 7-51 thru 7-57

PAGE NO

Maximum Aggregate Size 2-13
Mix Design System (Superpave) 4-4
Milling of Asphalt Pavements 8-8
Minimum Density Requirements 10-14
Minimum Sampling and Testing Schedule 7-9
Mix Adjustments 7-21
Mix Control Criteria ..... 7-10 & 7-21
Mix Design Criteria ..... 4-12 thru 4-13
Mix Design Engineer's Phone Number 1-6
Mix Design Formulas ..... 4-20 thru 4-22
Mix Design Request 4-11
Mix Design, Superpave Method 4-4
Mix Temperature (Plant) ..... 6-2 & 6-35
Mix Temperature (Roadway) 6-35, 10-9
Mix Types 3-3
Mix Verification 7-18
Mobile Grade Reference Systems ..... 9-22, 9-29 thru 9-32
Moisture Test ..... 7-36 & 7-37

N

NCDA & CS Scales Certification ..... 5-11 & 5-12
NCDOT Mix Design Procedures 4-9
Nominal Maximum Aggregate Size 2-13, 4-6
Non-Nuclear Gauges 10-13
Numbering Density Gauge Control Strips 10-32
Numbering Density Core Samples 10-50
Numbering Mix Samples 7-27

P

Partial Test Series (Mix) 7-11
Pavement Layer Depth Guidelines 3-4
Pavement Removal 8-8
Pavement Core Samples 10-30
Pavement Smoothness 11-1
Pavement Structure 3-1
Paver 9-18
Paver Screed Unit 9-20
Paver Tractor Unit 9-19
Phases of Rolling 9-46
Placing Operations ..... 9-14 & 9-24
Placing, Handwork 9-33
Planning Paving Operations ..... 9-14 & 9-15
Plant Certification ..... 5-1 & 5-2

PAGE NO

Plant Checklist ……5-4 thru 5-6
Plant Mix Deficiency Chart.... ....A-7
Platform Scales..... ....5-11, 5-12, & 6-39
Pneumatic-Tired Rollers..... 9-37
Pollution Control Equipment 6-38
Pre-Paving Meeting ……9-14 & 9-15
Prime Coats..... 9-4
Prime Coats Calculation Example.... 9-8
Processing of RAP/RAS Material..... ....8-5 thru 8-7
Profile Testing ……10-13
Performance Characteristics Considered in Mix Design 4-2
Public Weighmaster.. 6-34

Q

QMS 1-1
QMS Calculations ....7-73 thru 7-77
QMS Forms, Summary 12-5
QMS Minimum Sampling Schedule.. 7-9
QMS Technician Certification Program..... ....1-6 thru 1-10
QMS Technician Qualifications..... 1-4
QMS Technician Requirements ....1-5 & 1-6
Quality Acceptance of Mix 7-84
Quality Assurance of Density and Testing ……10-19, 10-45 thru 10-47
Quality Assurance of Density and Testing ……10-62 & 10-66
Quality Assurance Program (QAP) .. ..12-1 & 12-2
Quality Control of RAP/RAS ……..8-5
Quality Control Plan.. 1-2
Quality Management System (QMS) 1-1
Quartering of Mix Samples ... .7-28 thru 7-30

R

Random Numbers Table (Density) ……..10-21 thru 10-30
Random Numbers Table (Mix) …… 7-14 & 7-15
Random Sampling Locations for Density..... ....10-31 & 10-65
Random Sampling Locations for Mix Tests.. 7-12
RAP, New Source Gradation & Binder Tolerances (Table 1012-4) 8-6
RAP/RAS Material 8-5
RAP, Superpave Mix Design Criteria (Table 610-4) 8-3
Rate of Spread 3-4, 10-6
RAS, New Source Binder & Gradation Tolerances (Table 1012-2) 8-7
Reclaimed Asphalt Pavement (RAP) ....8-1 thru 8-7
Reclaimed Asphalt Shingles (RAS).. ....8-1 thru 8-7
Records and Reports 12-2
Recycled Mix, Compensation 8-7

PAGE NO

Recycled Mix, Composition (Mix Design & JMF)…… ... …….. 8-2
Recycled Mix, Job Mix Formula 4-14
Recycling Methods.... 8-1
Reduction in Pay
--Density..... 10-64
--Mix Properties ....7-22 & 7-23
Reduction of Samples to Test Size (Quartering)..... ....7-28 thru 7-30
Renewal of Certification..... 1-10
Reports and Reporting Procedures 12-2
Retention of QMS Records... 12-2
Retests for Mix Deficiencies.. ....7-78 & 7-79
Reweighing Loads for Verification ... .6-35 & 6-36
Rice Test (Max Specific Gravity)..... ....7-51 thru 7-54
Rideability Specifications ....11-3 thru 11-8
Roadway Paving Checklist ... .10-1 thru 10-4
Roller Pattern..... 9-48
Roller Requirements 9-34
Rollers ....9-36 thru 9-38
Rollers, Pneumatic-Tired Rollers..... 9-37
Rollers, Steel-Wheeled..... ....9-36 & 9-37
Rollers, Vibratory 9-38
Rolling Longitudinal Joints ....9-52 thru 9-54
Rolling Procedures.... 9-39
Rolling Transverse Joints..... ....9-49 thru 9-52
Rolling, Breakdown... 9-46
Rolling, Finish 9-47
Rolling, Intermediate 9-47

S

Sample Location for Mix (Full Test Series) .. .. ……....7-11 & 7-12
Sample Location for Mix (Partial Test Series)…… ..7-11
Sampling Frequencies (Mix) . ...7-9 & 7-10
Sampling Frequencies (Density)…… ..10-17 & 10-18
Sampling Procedures 7-25
Sampling Schedule (Mix) 7-9
Sand Equivalency Test..... 2-14
Scales Certification ... .5-11 & 5-12
Screed ....9-20 thru 9-22
Screed Operation..... ....9-27 & 9-28
Seasonal Limitations. 9-15
Segregation Diagnostic Chart..... ....A-11
Segregation of Mixes on the Roadway 9-26
Segregation of Plant Mixes... ....6-33 & 6-34

PAGE NO

Setting Batch Weights ..... 6-21 thru 6-24
Shoulder Wedge 9-29
Sieve Analysis ..... 7-38 & 7-39
Significant Decimals
--Plant Mix 7-73
--Roadway 9-56
Silicone Additive 2-6
Silos (Drum Plant) 6-32
Ski Pole Profile Control System ..... 9-29 thru 9-32
Slope Gauge 10-11
Soils Engineer's Phone Number 1-6
Sonic Profile Control System 9-32
Specific Gravity of Compacted Asphalt Mixtures ..... 7-58 thru 7-62
Spray Bar 9-2, 9-3
Spreading and Finishing 9-16
Standard Counts (Nuclear Density) 10-44
Steel-Wheeled Rollers 9-36
Stringline for Edge Alignment 9-24
Stringline for Grade Control ..... 9-30 & 9-31
Stripping Test (TSR) ..... 7-63 thru 7-68
Sub-Lots for Retesting ..... 7-78 & 7-79
Superpave Aggregate Gradation Requirements 4-12
Superpave Binder Grades ..... 2-3 & 2-9
Superpave Mix Design System 4-4
Superpave Technician Certification Requirements ..... 1-7 & 1-8
Surface Smoothness 10-12
Surface Testing ..... 10-13 thru 10-16
Surface Texture 10-11
Surge Storage Bins (Drum Plant) 6-32

T

Tack Coat 9-9
Tack Coat Application Rates 9-10
Tack Coat Application Temperatures 9-11
Tack Coat Rate Calculations ..... 9-12 & 9-13
Tandem Rollers 9-36
Tanker Sampling ..... 2-7 thru 2-9
Target Density, Density Gauge, QC - QA ..... 10-33, 36, 39 & 46
Technician Assessment Program ..... 1-13 thru 1-15
Technician Certification Renewal 1-10
Technician Certification Requirements ..... 1-7 & 1-8
Technician Qualifications ..... 1-2 thru 1-5
Technician Responsibilities ..... 2-1 & 10-1

PAGE NO

Temperature Limitations 9-15
Temperature of Mix... ..... 6-2, 6-35,10-9
Temperature / Volume Relationships..... 2-10
Tender Zone 9-47
Test Procedures Summary 7-31
Test Procedures (Plant Mixes)..... 7-32 thru 7-71
Test Sections (Density)..... 10-17, 38, 43 & 47
Testing Frequency (Mix) 7-9
Testing Frequency (Density). ..... 10-17 & 10-18
Testing of Asphalt Mixes..... 7-1
Tickets, Weigh ..... 6-34 & 6-35
Tools, Incidental for Paving Operations 9-17
Totalizer Flowmeter Guidelines ..... 5-9 & 5-10
TransTech **PQI Density Gauge**..... 10-13, 10-39, 10-45
Transverse Joints..... 9-49 thru 9-50
Transverse Joints, Paper 9-51
Transverse Joints, Rolling..... 9-49 thru 9-50
Troxler **PaveTracker Density Gauge**..... 10-13, 10-39, 10-45
Truck Scales 6-39, 5-9
Trucks, Haul..... 9-17
TSR Procedures ..... 7-63 thru 7-68
Types of Certifications 1-7
Typical Section, Pavement Structure 3-6

V

Verification Sampling (TSR).. 7-65
Verification Sampling (Plant Mix) ..... 7-81 thru 7-83
Verification Sampling (Density)..... 10-45, 47 & 63
Verification of Mix Properties ..... 7-18 & 7-19
Vibratory Rollers 9-38
Visual Inspection of Hot-Mix Asphalt 10-5
Volumetric Calculations ..... 7-73 thru 7-77

W

Warm Mix Asphalt (WMA) ..... 5-10, 7-17, 7-49 & 65
Washed Gradation Test ..... 7-32 & 7-33
Weather Limitations.. 9-15
Web Site Address ..... 1-7, & 11-4
Weighmaster Requirements..... 6-34
Weigh Bridge 6-28
Weight Certificates (Weigh Tickets)..... 6-34 & 10-4
Weighing Asphalt Materials .. .. 6-34 & 6-35