2016

ASPHALT QUALITY MANAGEMENT SYSTEM

MATERIALS AND TESTS UNIT

Asphalt QMS

PREFACE

This manual has been prepared as a practical guide for asphalt technicians in the construction and inspection of asphalt pavements. It is intended to serve as a basic introduction to asphalt construction for the new technician as well as a reference source to those with considerable experience. While it is fully recognized that this manual alone cannot make a person a totally competent asphalt technician, it should provide the basic knowledge and direction for one truly interested in becoming qualified, to do so.

The terms “technician”, “inspector”, and “contractor” are used throughout the manual. Generally, when reference is made to the technician, both the Contractor's representative and the agency's (NCDOT) representative are implied. Where reference is made to the “inspector” or the “contractor”, then either the agency's (NCDOT) or the contractor's representative, respectively, are specifically implied. The term “Department Personnel” is utilized throughout this manual. Historically, all construction inspection has been performed by NCDOT technicians; however, due to increasing work load and a decreasing number of construction technicians, the Department is utilizing private engineering firms to perform a portion of the construction inspection. Therefore, when reference is made to “Department Personnel”, this refers to either an individual working for the NCDOT or an appointed representative of the Department.

The requirements stated herein may be revised or amended from time to time by Supplemental Specifications, by Standard Special Provisions which are unique to a select group of projects, or by Project Special Provisions which are unique to the specific bid proposal or contract.

In this manual only masculine pronouns are used in reference to technicians, inspectors and contractors. This convention is used for the sake of brevity and is intended to refer to persons of either sex and corporate entities.

ACKNOWLEDGEMENTS

The North Carolina Department of Transportation would like to express appreciation to the Asphalt Institute for their permission to use quotations, graphs, illustrations and other literature in the preparation of this manual.

Appreciation is also expressed to Astec, Blaw-Knox, CMI, Caterpillar, Compaction America, Dynapac, Gencor, Ingersoll-Rand, Wirtgen, and other equipment manufacturers for the use of their illustrations and information. Use of specific trade names or manufacturers' illustrations does not imply endorsement by the Department. These are used solely because they are considered necessary in meeting the objective of this manual.

The Department also expresses appreciation to the Florida Department of Transportation, the Virginia Department of Highways and Transportation, the Carolina Asphalt Pavement Association, the Federal Highway Administration, the Transportation Research Board, and others for the use of their materials in the preparation of this manual.

MISSION STATEMENT

Asphalt QMS Program

The Mission of the Asphalt QMS Program is to continuously improve the overall quality of Asphalt Pavements in a cost-effective manner through Quality Control and Quality Assurance Processes.

NCDOT MATERIALS AND TESTS UNIT WEBSITE

https://connect.ncdot.gov/resources/Materials/Pages/default.aspx

MAJOR CHANGES FOR QMS MANUAL

Section 1:	**Quality Management System (QMS) for Asphalt Pavements**	
Page No.	*Subsection*	*Change*
1-6	1.3.7	Changed number of years for certification from four (4) to "five (5)".
1-6	1.3.7	Changed certification expiration date to "December 31st of the 5th year."
1-9	1.4.2	Removed references to Assessment Engineer.
1-10	1.4.7	Removed reference to Assessment Engineer.
Section 2:	**Materials Used In Asphalt Paving**	
		No Major Changes
Section 3:	**Asphalt Pavement Design**	
		No Major Changes
Section 4:	**Asphalt Mix Design and Job Mix Formulas**	
		No Major Changes
Section 5:	**Asphalt Plant Equipment**	
		No Major Changes
Section 6:	**Asphalt Plant Operations**	
Page No.	*Subsection*	*Change*
6-1	6.1.2	Reworded last sentence to apply to latest Provision on Mix Temperatures.
6-2	6.1.2	Inserted latest Table 610-1, *"Mixing Temperature At The Asphalt Plant".*
6-2	6.1.2	Deleted second note on Table 610-1.
6-2	6.1.2	Replaced ± 15° F with ± 25° F (mix temperature range at the plant).
6-2	6.1.2	Inserted last sentence from latest Provision on Mix Temperatures.
6-24	6.9	Replaced ± 15° F with ± 25° F (mix temperature range at the plant).
6-24	6.9	Replaced +15 °F to -25 °F with ± 25° F (mix temperature range at the roadway).
Section 7:	**Asphalt Mixture Sampling and Testing**	
Page No.	*Subsection*	*Change*
7-18	7.4.2	Added note requiring notification of QA Supervisor of all mix change requests.
7-32	7.9.4	Made weighing of sample a separate procedural step to match checklist. (now Step #2)
7-35	7.10.3	Changed calibration step to "Preheat" to properly match general procedure.
7-60	7.20	Added note to clarify that QA sampling percentages reset each calendar year.
Section 8:	**Recycling of Asphalt Pavements**	
Page No.	*Subsection*	*Change*
8-2	8.3	Reworded sentence to clarify that OGFC & UBWC mixes are prohibited from using RAP.
8-2	8.3	Inserted statement additional limits for maximum of 5% RAS in OGAFC mixes.
8-3	8.3	Inserted table showing additional mix design limits for RAS mixes.
8-6	8.6	Second paragraph replaced with appropriate paragraph from 2012 Specifications.
Section 9:	**Roadway Paving Operations**	
Page No.	*Subsection*	*Change*
9-4	9.2.2	Removed phrase "in the shade" from section on temperatures for Prime Coat.
9-6	9.3	Removed phrase "in the shade" from section on temperatures for Tack Coat.
9-10	9.4.3	Inserted latest version of Table 610-5 with Note A restrictions on RAS mixes.

Section 10:	**Roadway Inspection and Testing of Asphalt Pavements**	
Page No.	*Subsection*	*Change*
10-6	10.1.7	Replaced +15 °F to -25 °F with **± 25° F** (mix temperature range at the roadway).
10-6	10.1.7	Reworded 3rd paragraph to better fit new requirements of latest Table 610-1.
10-6	10.1.7	Inserted latest Table 610-1, "Mixing Temperature At The Asphalt Plant".
10-10	10.3.3	Deleted Item (4) "Pavement is being placed for intersections".
10-11	10.3.3	[Diagram] Deleted Item (4) "Pavement is being placed for intersections".
10-12	10.3.4	Deleted Item 1.b. "-Y- Line travel lane pavements of uniform thickness in intersections"
10-12	10.3.4	Reworded Item 3. "Uniform width paved shoulders…"
10-12	10.3.4	Deleted Item 4.
10-12	10.3.4	Paragraph was moved up from the bottom of the section.
10-12	10.3.4	Reworded next paragraph and deleted last 2 sentences.
10-12	10.3.4	Reworded Items 1, 2, 3, & 4.
10-12	10.3.4	Deleted Items 5 & 6.
10-30	10.4.8	Deleted multiple paragraphs referencing density testing in intersections/irregular areas.
10-43	10.6.6	Deleted multiple paragraphs referencing density testing in intersections/irregular areas.
10-50	10.7	Removed 5% QA Comparison core sample requirement.
10-50	10.7	Increased Department Retest of QC Cores percentage from 5% to 10%.
10-50	10.7	Acceptable Limits of Precision table – removed QA Comparison core limits.
10-50	10.7.1	Removed portion on QA Comparison Cores.
10-52	10.8.2	Inserted "per day" to require a minimum of 2 SQ cores per day.
10-52	10.8.2	Inserted sentence clarifying that no V- or DR-cores are required under Small Quantity.
Various	Various	Removed references to QA Comparison cores sampling/testing.
Section 11:	**Pavement Smoothness / Rideability**	
Various	Various	Sections rewritten to reflect Rideability Specification updates.
Section 12:	**Records and Reports**	
		Reformatting Changes to Various Forms & Instructions

TABLE OF CONTENTS

SECTION 1:	**QUALITY MANAGEMENT SYSTEM (QMS) FOR ASPHALT PAVEMENTS**	***PAGE NO.***
	General	1-1
	Contractor's Quality Control Plan	1-1
	Asphalt QMS Technician Qualifications and Certifications	1-1
	Purpose of Inspection and Testing	1-2
	DOT Technician's Authority	1-2
	DOT Technician's Relationship with Contractor	1-2
	Qualifications of QC and QA Technicians	1-3
	QMS Technician Requirements	1-4
	NCDOT Asphalt Technician Certification Program	1-4
	NCDOT Asphalt Technician Certification - Enrollment Procedures	1-7
	QMS Laboratory Technician Assessment Program	1-9
	Ethics and Falsification	1-11
	FHWA Form 10-22	1-13
SECTION 2:	**MATERIALS USED IN ASPHALT PAVING**	
	General Description of Asphalt Paving Materials / Pavements	2-1
	Technician Responsibilities	2-1
	Asphalt Materials	2-1
	Asphalt Binder	2-1
	Refining Crude Petroleum	2-2
	Classification and Grading of Paving Grade Asphalts	2-2
	Asphalt Binders	2-3
	Emulsified Asphalts	2-3
	Characteristics of Asphalt	2-3
	Testing the Properties of Performance Graded Asphalt Binders	2-4
	Asphalt Additives	2-5
	Asphalt Binder Storage	2-5
	Delivery and Acceptance of Asphalt Materials	2-5
	NCDOT Specifications for Asphalts (Figure 2-3)	2-7
	Emulsified Asphalts (Figure 2-4)	2-7
	Temperature-Volume Relationships of Asphalts	2-7
	Mineral Aggregates	2-8
	Sources of Aggregates	2-8
	Evaluating the Quality of Aggregates	2-9
	Aggregate Consensus Properties (Table 1012-1)	2-10
	Aggregate Gradation Table 1005-1 (Coarse Aggregate)	2-11
SECTION 3:	**ASPHALT PAVEMENT DESIGN**	
	Designing an Asphalt Pavement Structure (Thickness)	3-1
	Asphalt Mix Types	3-2
	Pavement Layer Depth Guidelines (For Pavement Design Purposes)	3-3
	Application Rates of Spread per Inch Depth	3-3
	Typical Asphalt Binder Contents	3-4
	Example Roadway Typical Section	3-4
SECTION 4:	**ASPHALT MIX DESIGN AND JOB MIX FORMULAS**	
	Purposes of Mix Designs	4-1
	Performance Characteristics Considered in Mix Design	4-1
	Permanent Deformation (Rut Resistance)	4-1
	Durability	4-2
	Flexibility	4-2
	Fatigue (Cracking) Resistance	4-2

SECTION 4:	**ASPHALT MIX DESIGN AND JOB MIX FORMULAS (cont.)**	***PAGE NO.***
	Skid Resistance	4-3
	Impermeability	4-3
	Low Temperature/Shrinkage Cracking	4-3
	Workability	4-3
	Economics	4-3
	The Mix Design Process	4-3
	Aggregate Properties and Gradation Requirements	4-3
	Asphalt Binder Grade Selection and Requirements	4-4
	Mixture Volumetric Properties and Requirements	4-4
	Dust to Effective Binder Ratio	4-5
	Moisture Susceptibility	4-5
	Permanent Deformation (Rut Resistance)	4-5
	NCDOT Mix Design Procedures	4-6
	The Job Mix Formula	4-8
	Superpave Aggregate Gradation Criteria (Table 610-2)	4-8
	Superpave Mix Design Criteria (Table 610-3)	4-9
	Superpave Applicable Virgin Asphalt Grades (Table 610-4)	4-9
	NCDOT "Master" Job Mix Formula Procedures	4-9
	Composition of Recycled Mixtures (JMF)	4-10
	Project File Job Mix Formula Procedures	4-11
	Mix Type Designations	4-12
	Job Mix Formula Numbering System	4-12
	Job Mix Formula Example	4-13
	Asphalt Mix Design and Testing Calculations / Formulas	4-14
SECTION 5:	**ASPHALT PLANT EQUIPMENT AND REQUIREMENTS**	
	Basic Operation of an Asphalt Plant	5-1
	Types of Asphalt Plants	5-1
	Certification of Asphalt Plants	5-1
	Asphalt Plant Specification Checklist	5-3
	Batch Plant Operations and Components	5-5
	Drum-Mix Plant Operations and Components	5-6
	Introduction of Anti-Strip Additive at Batch Plants or Drum Plants	5-7
	Introduction of Anti-Strip Additive at Binder Supplier's Terminal	5-7
	Warm Mix Asphalt (WMA) Technologies	5-7
	NC Dept. of Agriculture & Consumer Services (NCDA & CS) Scales Certification	5-8
SECTION 6:	**ASPHALT PLANT OPERATIONS**	
	Asphalt Binder Storage and Handling	6-1
	Asphalt Mix Temperature Requirements	6-1
	Aggregate Storage	6-2
	Aggregate Cold Feed System	6-2
	Calibration of Cold Feed Blend Ratios	6-4
	Batch Plant Operations	6-6
	The Dryer	6-6
	Screening Unit	6-7
	Hot Bins	6-8
	Aggregate Weigh Hopper	6-8
	Asphalt Binder Bucket or Meter	6-8
	The Mixer Unit (Pugmill)	6-9
	Automatic Control of Proportioning and Mixing	6-9
	Calibration of Batch Plant Asphalt Scales, Weigh Bridges and Meters	6-9
	Setting of Batch Weights	6-11

SECTION 6:	**ASPHALT PLANT OPERATIONS (cont.)**	***PAGE NO.***
	Drum Mix Plant Operations	6-18
	Cold Feed System	6-18
	Vibratory Scalping Screen	6-19
	Weight Measurement of Aggregate and RAP / RAS	6-19
	Asphalt Binder Meter System	6-20
	Anti-Strip Additive Meter System	6-22
	Drum-Mixer Dryer	6-22
	Surge Storage Bins (Silos)	6-22
	Segregation of Asphalt Mixtures	6-23
	Scales and Public Weighmaster	6-24
	Hauling of Asphalt Mixtures	6-24
	Pollution Control Equipment	6-25
	Safety Requirements	6-25
	Production Consistency and Automatic Equipment	6-25
SECTION 7:	**ASPHALT MIXTURE SAMPLING AND TESTING**	
	Introduction	7-1
	QMS Certified Field Laboratory	7-2
	QMS Lab Required Equipment List for Asphalt Mix Testing	7-2
	QMS Lab Equipment Calibration Requirements	7-4
	QMS Plant Sampling Schedule	7-9
	Quality Control (QC) Minimum Sampling and Testing Schedule	7-10
	Sample Location for Mix	7-11
	NCDOT Random Numbers Table to be used for the QC-9 Form	7-13
	Sample Location for Aggregates, RAP, & RAS	7-16
	Mix Verification, JMF Adjustments, and Corrective Action Procedures	7-16
	Mix Verification Requirements	7-16
	Allowable Mix Adjustments	7-17
	Control Charts (QA/QC-6 Form)	7-18
	Control Limits	7-19
	Corrective Actions	7-19
	Sampling Procedures	7-22
	Aggregate, RAP, and RAS Sampling	7-22
	Numbering of Mix Samples	7-22
	Sampling Mix from the Truck	7-23
	Sampling Device	7-23
	Sample Location in Truck	7-23
	Obtaining Mix Samples (Full & Partial Test Series)	7-24
	QC Quartering (Mix Sample for Full and Partial Test Series)	7-24
	QC Quartering (RAP or RAS Samples)	7-25
	QA Quartering (Mix Sample for Full and Partial Test Series)	7-25
	QA Quartering (Aggregates, RAP, and RAS)	7-26
	Test Procedures – General	7-26
	Sieve Analysis of Fine and Coarse Aggregates	7-27
	Moisture Content of Aggregate by Drying	7-30
	Sieve Analysis of Recovered Aggregate	7-31
	Asphalt Binder Content of Asphalt Mix by the Ignition Method	7-33
	Superpave Gyratory Compactor Field Test Procedure	7-37
	Maximum Specific Gravity (G_{mm}) of Asphalt Mix – Rice Method	7-40
	Maximum Specific Gravity (G_{mm}) of Asphalt Mix – Vacuum Method	7-42
	Bulk Specific Gravity of Compacted Asphalt Mix – SSD Method	7-44
	Bulk Specific Gravity of Compacted Asphalt Mix – Vacuum Method	7-46
	Tensile Strength Ratio (TSR) Test	7-48
	Draindown Characteristics in Uncompacted Asphalt Mix	7-53

SECTION 7:	**ASPHALT MIXTURE SAMPLING AND TESTING (cont.)**	***PAGE NO.***
	QMS Field Calculations	7-55
	Significant Decimals	7-55
	Voids in Total Mix (VTM) Calculation	7-55
	Aggregate Effective Specific Gravity(G_{se}) Calculation	7-56
	Voids in Mineral Aggregate (VMA) Calculation	7-56
	Voids Filled with Asphalt (VFA) Calculation	7-57
	Dust / Effective Binder Ratio ($P_{0.075}$ / P_{be}) Calculation	7-57
	Percent G_{mm} @ N_{ini} Calculation	7-58
	Reporting of Test Data	7-58
	Allowable Resampling and Retesting for Mix Deficiencies	7-59
	Guidelines for Retests of Plant Mix Deficiencies	7-59
	Retest Procedures	7-59
	Quality Assurance (QA) Sampling and Testing	7-60
	Split Sampling and Testing Guidelines for Plant Mix	7-60
	Verification Sampling and Testing Guidelines for Plant Mix	7-62
	Dispute Resolution Testing Guidelines for Plant Mix	7-63
	Acceptance Based on Mix Testing	7-63
SECTION 8:	**RECYCLING OF ASPHALT PAVEMENTS**	
	Asphalt Mixture Recycling	8-1
	Recycling Methods	8-1
	Composition of Recycled Asphalt Mixtures (Mix Design & JMF)	8-2
	Plant Calculations and Control for Recycled Mixes	8-3
	Quality Control, Handling, and Processing of RAP and RAS Materials	8-4
	Compensation for Recycled Asphalt Pavements	8-6
	Milling of Asphalt Pavements	8-7
SECTION 9:	**ROADWAY PAVING OPERATIONS**	
	Introduction	9-1
	The Asphalt Distributor	9-1
	Asphalt Delivery Tickets for Emulsified Asphalts	9-3
	Prime Coat	9-3
	Grades, Application Rates and Temperatures for Prime Coats	9-3
	Application of Prime Coat	9-4
	Determination of Prime Coat Rates and Pay Quantities	9-5
	Tack Coat	9-5
	Tack Coat Grades	9-6
	Application Rates and Temperatures	9-6
	Application of Tack Coat	9-7
	Determination of Tack Coat Rate	9-8
	Asphalt Mix Placement and Compaction Operations	9-8
	Planning Paving Operations	9-9
	Weather, Temperature, and Seasonal Limitations	9-9
	Spreading and Finishing of Asphalt Pavements	9-10
	Equipment	9-10
	Incidental Tools	9-11
	Asphalt Distributor	9-11
	Haul Trucks	9-11
	The Asphalt Paver	9-12
	Material Transfer Vehicle (MTV)	9-15
	Coordinating Plant Production and Paver Speed	9-15
	The Placing Operation	9-16
	The Spreading Operation	9-17
	Fundamentals of Screed Operation	9-18
	Use of Automatic Screed Controls	9-20

		PAGE NO.
SECTION 9:	**ROADWAY PAVING OPERATIONS (cont.)**	
	Handwork	9-23
	Shoulder Wedge	9-23
	Compaction of Asphalt Pavements	9-23
	General	9-23
	Compaction Specifications	9-24
	Asphalt Roller Types	9-25
	Compaction Equipment Inspection	9-27
	Rolling and Compaction Procedures	9-27
	Factors Affecting Compaction	9-30
	Three Phases of Rolling	9-32
	Roller Patterns	9-33
	Constructing Transverse Joints	9-35
	Transverse Joint Specifications	9-35
	Construction Procedures	9-35
	Constructing Longitudinal Joints	9-37
	Longitudinal Joint Specifications	9-37
	Location of Longitudinal Joints	9-37
	Construction Procedures	9-37
	Construction of the Adjoining Lane	9-37
	Rolling and Compaction of Longitudinal Joints	9-38
	Significant Decimals for Roadway Calculations	9-39
SECTION 10:	**ROADWAY INSPECTION AND TESTING OF ASPHALT PAVEMENTS**	
	Roadway Inspection	10-1
	General	10-1
	QC/QA Technicians Checklist for Roadway Operations	10-1
	Required Information for Asphalt Weight Certificates	10-3
	Visual Inspection of the Mix (Plant and Roadway)	10-4
	Identifying Mat Problems, Causes, and Cures	10-5
	Determination of Rate of Spread and Tonnage Required	10-5
	Temperature of the Mix at Roadway	10-6
	Segregation of Mixes on the Roadway	10-6
	Checking the Mat Cross-Slope and Thickness	10-7
	Surface Texture	10-8
	Limited Production Policy for Unsatisfactory Laydown	10-8
	Pavement Density QMS Testing Procedures - General	10-9
	Density Testing Methods	10-9
	Minimum Density Requirements	10-10
	Determination of “Lots”	10-10
	Density Control Sampling and Testing Frequencies	10-12
	Procedures for Placing and Obtaining Core Samples	10-13
	Determining Random Sample Locations	10-14
	Random Numbers Table for Determining Density Locations	10-15
	Density Gauge Quality Control (QC)	10-25
	Density Gauge QC Procedures	10-25
	Location of QC Density Gauge Control Strips	10-25
	Frequency of QC Density Gauge Control Strips	10-25
	Numbering of Density Gauge Control Strips	10-26
	Construction of Density Gauge Control Strips (QC Procedures)	10-26
	Core Samples from Density Gauge Control Strips	10-26
	Determination of QC Density Gauge Control Strip Target Density	10-26
	Establishment of QC Density Gauge Test Sections	10-30
	Testing a QC Density Gauge Test Section	10-30
	Procedures for Re-Testing a QC Density Gauge Test Section	10-31
	Numbering QC Density Gauge Test Sections	10-33

		PAGE NO.
SECTION 10:	**ROADWAY INSPECTION AND TESTING OF ASPHALT PAVEMENTS (cont.)**	
	Reporting QC Density Gauge Test Sections (M&T 516 QC)	10-33
	Density Gauge Quality Assurance (QA)	10-35
	Density Gauge QA Procedures	10-35
	Quality Assurance (QA) Density Gauge Control Strip Procedures	10-35
	Quality Assurance (QA) Density Gauge Test Section Procedures	10-36
	Quality Assurance (QA) Density Gauge Verification & Dispute Resolution Process	10-36
	Core Sample Density Quality Control (QC)	10-40
	Core Sample Density Control - General	10-40
	Core Sample QC Control Strip Requirements and Procedures	10-40
	Numbering of Core Sample Control Strips and Core Samples	10-40
	Construction of Core Sample Control Strips (QC Procedures)	10-41
	Determination of QC Core Sample Control Strip Density	10-43
	Establishment of QC Core Sample Test Sections	10-43
	Determining Random Sample Locations for QC Core Sample Density Testing	10-43
	Testing a Core Sample Test Section (QC)	10-47
	Numbering Quality Control (QC) Core Samples	10-47
	Checking QC Core Samples	10-47
	Numbering Quality Control (QC) Check Core Samples	10-48
	Reporting Core Sample Control (QC) Test Sections (Form QC-5)	10-48
	Core Sample Density Quality Assurance (QA)	10-50
	Core Sample Test Section Procedures	10-50
	Quality Assurance (QA) Core Sample Verification & DR Process	10-50
	Acceptance of Density (Density Gauge and/or Core Sample Control	10-51
	Limited Production Procedures Gauge & Core Sample Density Control Failures	10-54
	Independent Assurance (IA) Sampling and Testing for Density Control	10-55
SECTION 11:	**PAVEMENT SMOOTHNESS / RIDEABILITY**	
	Pavement Smoothness	11-1
	Profile Testing	11-1
	Details on the Inertial Profiler (Option 1) using IRI	11-2
	Final Surface Testing – Asphalt Pavements – Specifications	11-2
	MRI Price Adjustments (Table 610-7)	11-3
	Option 2 – North Carolina Hearne Straightedge	11-4
	Pay Adjustment Schedule for CSI (Table 610-8)	11-4
	Calibration of the Hearne Straightedge	11-4
	Determination of the Cumulative Straightedge Index	11-5
	Hearne Straightedge Summary (QA/QC-7 Form)	11-10
SECTION 12:	**RECORDS AND REPORTS**	
	General Information	12-1
	Records and Report Documentation	12-1
	Retention of QMS Forms	12-2
	Falsification of Records	12-2
	Forms and Instructions	12-2
	Summary of All QMS Forms and Instructions	12-3
INDEX		I-1
APPENDICES		
	Definitions of Asphalt Pavement Terminology	A-1
	Deficiencies in Hot Mix Asphalt Chart	A-7
	Binder Content Diagnostic Chart	A-8
	Mat Problem Trouble-Shooting Guide	A-10
	Segregation Diagnostic Chart	A-11

SECTION 1

QUALITY MANAGEMENT SYSTEM (QMS) FOR ASPHALT PAVEMENTS

1.1 GENERAL

Section 609 of the NCDOT Standard Specifications and all applicable Project or Standard Special Provisions provide for Quality Control and Quality Assurance of asphalt pavements by use of a Quality Management System (QMS). The basic concept of this process is that the Contractor performs adequate testing and inspection to insure a quality asphalt pavement and the Department performs adequate testing and inspection to insure that the Contractor's results are accurate. This system requires both the Department and the Contractor to have technicians that are competent in production, construction, testing, and inspection of asphalt pavements. The general idea is for the Contractor to perform the necessary tests and inspection to insure the likelihood that all mix meets the Specifications instead of "after-the-fact" testing to see if it does meet the Specifications. This approach gives the Contractor much more control over his total operations. He is responsible for his product from the design of the mix to the final acceptance of the pavement. The Department simply monitors his process to be sure that what he is doing is adequate and accurate; and, then performs independent testing to verify the quality of the end product.

The Contractor's responsibility under the QMS process is referred to as Quality Control (QC). The Department's responsibility under the QMS process is referred to as Quality Assurance (QA). The Contractor is responsible to provide competent personnel to perform his quality control and the Department is responsible to provide competent personnel to perform their quality assurance. The requirements and details of certification for these personnel to perform the QC/QA work is given in Sections 1.3.6 and 1.3.7.

The requirements for the Contractor's QC sampling and testing are contained in Section 609 of the Specifications and Section 7. The frequency of these activities may vary with the process and the materials. When test results vary from the design and/or specifications, changes to the process shall be made. The frequency of the appropriate QC activities shall be increased until the proper conditions have been restored. The Department's minimum frequency requirement for QA sampling and testing is specified in Section 609-6 of the Standard Specifications and is covered in detail later in this manual.

The Contractor may utilize innovative equipment or techniques not addressed by the specifications or these provisions to produce or monitor the production of the mix, subject to approval by the Department's Asphalt Design Engineer.

QMS is a total process that encompasses the Contractor's mix design, the QC testing and inspection, and the Department's quality assurance and acceptance of the Contractor's process and procedures. Each of these aspects of the total process will be addressed in detail later in this manual. While all of these are very important, the real success of this program is that the Contractor and the Department carry out every aspect of the process such that a quality asphalt pavement is the final product.

1.2 CONTRACTOR'S QUALITY CONTROL PLAN

The Contractor will not be required to submit a written quality control plan to the Department; however, the Contractor, at a minimum, shall perform all quality control activities required by the specifications as well as accepted asphalt industry quality control practices and procedures.

1.3 ASPHALT QMS TECHNICIAN QUALIFICATIONS AND CERTIFICATIONS

1.3.1 General

The technician's role is extremely vital in every road construction project, especially in asphalt construction. He has the job of ensuring that the pavement design as described in the plans and specifications produces a strong, durable, and reliable pavement on the roadway. The technician's job is one that demands knowledge, awareness, keen observational skills, and diplomacy. It is among the toughest jobs in the construction industry.

Most road and highway construction in North Carolina is performed under contract. One party (the Contractor) agrees to perform certain work that meets specified standards. In return for this work, the Contractor is paid by the other contractual party (the owner) who is often a local, state or federal government agency. The contract between Contractor and owner includes plans and specifications that must be followed during pavement construction and be met by the

finished product. Whether or not these requirements are fulfilled determines the quality level of the finished pavement and how well the pavement will serve the public.

Because asphalt pavement construction is often complex, plans and specifications are often detailed and lengthy. Ensuring that the plans are followed precisely demands the owner and the Contractor have an agent acting as their eyes and ears, and who is on-hand throughout the construction process. That agent is the asphalt technician. It is the technician's duty to see that construction operations produce the results called for by the plans and specifications. In this capacity, both the DOT's technician and the Contractor's technician have certain areas of responsibility to identify deviations from project specifications and to see that they are corrected immediately. In any case, neither technician has the authority to change or modify the contract or specifications.

Knowledge is the path every technician must follow to improve his performance and capability. Whether a technician is new to the job or seasoned, his learning never stops. New developments that affect his job are constantly appearing. Additionally, every technician needs to refresh his knowledge periodically and to brush up on procedures that are used infrequently. This manual is a good source of refresher information, as well as a basic text for training the new asphalt technician.

A manual alone, however, is not enough. It must be used in conjunction with other learning tools. The most effective learning tool is on-the-job training. The job site is where things are happening that a technician must know. It is the ideal place to observe, to ask questions, to get answers. On the job, the new technician develops inspection skills first-hand and discovers what occurs during asphalt mix construction and why certain methods achieve certain results. Combined with this course of instruction, on-the-job training provides the technician with the necessary tools to carry out his duties and responsibilities.

1.3.2 Purpose of Inspection and Testing

The purpose of inspecting and testing asphalt construction is to ensure the quality of the work meets project requirements and specifications. To accomplish this, the asphalt technician must be familiar with the parts of the construction contract that apply to his job.

The contract is the agreement between the owner or contracting agency and the Contractor. It states the obligations of both parties, including labor, materials, performance and payment. While there are many documents that make up the construction contract, the technician is concerned primarily with the plans and specifications. Together, plans and specifications explain requirements that the Contractor must fulfill to build a satisfactory pavement and get paid in full for his work.

Plans are the contract documents that show the location, physical aspects, details and dimensions of the work. The plans include layouts, profiles, cross-sections and other details.

Specifications are the written technical directions and requirements for the work; also, the standard specifications and the special provisions complement the plans by providing instructions that are not specifically indicated on the drawings. Specifications are the means of communication among the designer, the Contractor, and the technician. Specifications include Standard Special Provisions and Project Special Provisions, which simply are revisions to the specifications.

1.3.3 DOT Technician's Authority

The Division Engineer or project Resident Engineer assigns the DOT’s technicians, and their authority is stated in the Standard Specifications under Duties and Authority of the Inspector (Article 105-10). The Technician assists the Engineer in determining that the work done and the materials used meet contract requirements. The Technician has the authority to reject defective materials and to advise the Contractor that payment will be withheld for work that is being done improperly. The Engineer may delegate additional authority to him; however, the Technician is not authorized to make any final acceptance of the work. The technician is generally responsible to ensure that the contractor is utilizing good construction practices in order to deliver a satisfactory product at a reasonable cost.

1.3.4 DOT Technician's Relationship with Contractor

It is required by the Specifications that a preconstruction conference be held between the inspection and engineering personnel of the owner and the Contractor's supervisory personnel. At such a meeting the plans and specifications are reviewed, material deliveries and construction techniques discussed, traffic control procedures agreed upon, specific project responsibilities and lines of authority defined, and any other necessary items that may have a bearing on the project are discussed.

One of the most important aspects of the technician's job is his relationship with the Contractor. This relationship affects the management of the project. A good personal rapport assists the Technician in resolving problems that might arise. When dealing with the Contractor and his personnel, the Technician should be friendly, but he must be

firm and impartial in making decisions. If the Technician experiences difficulties with the Contractor, he should immediately inform the Engineer.

The Technician will assist himself, as well as the Contractor, by trying to understand the project from the Contractor's point of view. The Technician is primarily interested in quality (how good the pavement is); the Contractor is primarily interested in quantity (how much pavement is placed in a given time). Under no condition should the Technician permit a reduction in quality in the interests of quantity. However, as long as pavement quality is maintained, the Technician should assist the Contractor's efforts to place asphalt mix as efficiently as practical and within specifications.

The Technician has the obligation to influence the construction process so that the best possible roadway is constructed. He cannot simply take a passive role when observing a problem. He must be willing to help solve it. For example, after observing a particular situation, the Technician may be able to suggest a change in procedures that could improve the quality of the work while increasing the efficiency of the operation. Such a suggestion benefits both the Contractor and the Department of Transportation.

When offering assistance in solving problems, however, the Technician must be careful to avoid involving himself in the supervision of construction. He should avoid giving the impression that he wants to control the work, and he must never issue an order to the Contractor's workers. Assuming supervision of the work puts the Technician in the undesirable position of judging the quality of work by means that he dictated.

1.3.5 Qualifications of QC and QA Technicians

The personal attributes required of a technician go beyond those expected of an ordinary workman. The technician must be honest. He must conduct himself in a fair and straightforward manner. While under stress, he must be able to maintain his composure and make good decisions. He must have keen common sense for making competent decisions. He must be frank and sincere in his relationships with people and must be a skilled diplomat, able to handle tough situations without arousing hostility. Above all, he must be observant and be capable of keeping good records.

Some technical study and construction experience is helpful. As a minimum, however, the technician must be able to perform accurate mathematical calculations and should be familiar with the fundamentals of engineering equations. It is essential that he knows how to read and understand plans, specifications and other contract documents in order to understand requirements of the work. Although not responsible for the design of roadways, the technician should understand the basic engineering principles involved. He should be familiar with the characteristics of materials and know the principles of material testing, including the interpretation of test results.

The technician must have specialized knowledge pertaining to his particular job. For example, a plant technician must have a thorough working knowledge of asphalt plants, but he must also have a broad general knowledge of asphalt materials, production, and construction procedures. Practical experience with asphalt mix production, roadway construction, and asphalt laboratory testing is a valuable asset.

If all the qualifications of a technician could be reduced to four, they would be: (1) knowledge, (2) common sense, (3) observational skills, and (4) courtesy. The basic summary of each is presented below.

(1) Knowledge--The technician must know about the work that he is inspecting. He should be familiar with materials, equipment and asphalt pavement construction procedures. The more knowledgeable a technician is, the better prepared he is to perform his duties.

(2) Common Sense--A good technician must have abundant common sense. While common sense is no substitute for knowledge, it is the means of interpreting the specifications to properly enforce their intent. Common sense grows out of knowledge, but it cannot be learned out of a book.

(3) Observational Skills--A technician can act only on what he observes. What is not seen is missed. Thus, it is important not only for a technician to look carefully at everything going on around him, but also to see what he looks at. "Seeing" in this context means thinking carefully about what the eyes observe. Without seeing, a technician can observe an incorrect condition and not realize it.

(4) Courtesy--A major part of the technician's job is to inform others when unsatisfactory conditions exist or when the specifications are not being met. Both parties expect valid criticism and objections from the other, yet the manner of presenting comments can often become the source of poor relations between Contractor and technician. Experience shows that it is not what is said, so much as the way it is said that is important. Gruff, bossy and sarcastic comments are unacceptable from any technician, even if given in answer to aggravating remarks from others.

Once Contractor-DOT relations deteriorate, the work suffers. Since the technician's primary concern is to preserve the quality of the work, he should show common courtesy at all times, even when tempted not to do so.

Although desired qualities for prospective technicians can be listed, the bottom line is this: To do a professional job, the technician must want to do a good job, know how to do it, and go about it in a manner that contributes favorably to the project.

1.3.6 QMS Technician Requirements

On Quality Management System projects, all asphalt plant mix testing technicians (both Contractor & DOT) are required to be certified through the Department's current Asphalt Technician Certification Program. All plant technicians (both Contractor and DOT) must be certified as Plant technicians. Certified QMS Level I Plant Technicians are testing personnel and are required to be at the plant site at all times during production of material for the project. A plant operator who is a certified Asphalt Plant Technician Level I may be utilized to meet this requirement when daily production for each mix design is less than 100 tons provided the randomly scheduled increment sample as defined in Sub-article 609-5(C)2 is not within that tonnage. When performing in this capacity, the plant operator will be responsible for all quality control activities which are necessary and required. Absences of the Level I Technician, other than those for normal breaks and emergencies must be pre-approved in writing by the appropriate QA Supervisor or his designated representative(s). Any extended absence of the Technician that has not been approved will result in immediate suspension of production by the Engineer. All mix produced during an unexcused absence of the Level I technician will be accepted in accordance with Article 105-3 of the Specifications. The Contractor is also required to have readily available (on-call) a QMS Level II Plant Technician responsible for making process control adjustments and solving mix problems. He must be located such as to be able to respond to all plant mix problems in a timely manner. The Department will have at least one certified QMS Level II Plant Technician on its' Quality Assurance (QA) team as well as several Level I Technicians. Either a QC or QA Level II Technician may also function as a Level I Technician, in which case he/she would fulfill the requirements for both the Level I and II technicians.

All Roadway Technicians are required to be certified through the Department's current certification program. The Contractor is required to have at least one certified roadway technician on the project at all times during normal laydown operations. This person is responsible for monitoring all roadway paving operations and all quality control processes and activities, to include stopping production or implementing corrective measures when warranted. The Contractor's technician(s) must meet the same requirements as DOT personnel and will be certified by the same certification program. A certified DOT Roadway Technician will also be on-site at all times during paving operations.

The Department's Certification Program for QMS plant and roadway technicians is managed by the Materials and Tests Unit's Asphalt Laboratory. This section will maintain a listing of all plant and roadway QMS personnel certified by NCDOT. This listing will be maintained in an internal computer database (HiCAMS).

The Asphalt Laboratory may be contacted at (919) 329-4060 for further instructions on how to access this information. This listing may be used to verify certification of personnel working on QMS projects.

It is required that both DOT and Contractor Density Gauge Operators be certified through the Department's current QMS Density Gauge Technician's Program. The Department's Certification Program for QMS Density Gauge Technicians is managed by the Soils Engineer of the DOT M&T Unit. The Soils Engineer will maintain a listing of all certified QMS Density Gauge Technicians and may be contacted at (919) 329-4150 for verification of these. This listing will also be maintained in a computer database, and is accessible via the NCDOT's Materials & Tests website.

The QMS Specification requires that the Contractor design his own asphalt mixes. He may do so by use of his own personnel or by hiring an approved company to do it for him. Whichever the case, any technician performing mix designs for use on NCDOT specification projects must be certified through the Department's current mix design certification program. This certification program is managed by the Asphalt Design Engineer of the Department's Materials and Tests Unit. The Asphalt Design Engineer may be contacted at (919) 329-4060 for verification of a technician's mix design certification.

An organizational chart, including names, telephone numbers, and current certification numbers of all the Contractor's personnel responsible for the quality control program shall be posted in the Contractor's laboratory while the asphalt paving work is in progress.

1.3.7 NCDOT Asphalt Technician Certification Program

1. General

The certification of asphalt technicians is a program by which it can be reasonably assured that both the DOT's quality assurance personnel and the Contractor's quality control personnel are knowledgeable and qualified to perform the required sampling, testing and inspection of asphalt mixtures and pavements. Certification will also include a general knowledge of the techniques and equipment used in the construction of asphalt pavements, including asphalt plant operations, placement operations and compaction operations. Under the NCDOT program, a technician may be certified in either mix design techniques, plant operations, roadway operations, density gauge operations, or all of these.

Certification in either area will include some overlap into the other area. For example, a certification in plant operations will include a basic knowledge and understanding of roadway procedures, etc. This is required since it can be readily seen that proficiency in one area requires some general knowledge of the overall operation.

The certification program will be operated on a continuing basis. There will be classes and examinations scheduled throughout each year. In addition, there will be an "on-the-job" training program for Level I plant & roadway technicians. The Asphalt Design Engineer will provide applications for and maintain a master training schedule of all related classes. Both the applications and schedule may be downloaded from the Materials and Tests Unit's web site located at the following web address:

https://connect.ncdot.gov/resources/Materials/Pages/QMSAsphaltTrainingSchool.aspx

Enrollment procedures for these training classes are included at the end of this Section. All certifications will generally be effective for four years beginning from the date of passing the certification test and then must be renewed. Details for renewal of certifications are covered later in this section.

2. Types of Certifications

Listed next are the different types of certifications related to asphalt pavements and a basic job description for each. As mentioned previously, a technician may be certified as any one or more of these, or possibly all of these. As noted in the prerequisites listed later, some certifications require a lower level certification before advancement to the next level of certification.

A. QMS Certifications

1. *QMS Level I Plant Technician* - A Technician trained and competent in testing and inspection of asphalt mix at the plant.
2. *QMS Level II Plant Technician* - A Technician trained and competent in making mix adjustments and solving asphalt mix problems.
3. *QMS Mix Sampling Technician* - A Technician trained and competent in sampling of asphalt mix at the plant.
4. *QMS Roadway Technician* - A Technician trained and competent in roadway laydown, compaction, and density procedures.
5. *QMS Density Gauge Operator* - A Technician trained and competent in the use of a density gauge in accordance with the QMS specification.
6. *Mix Design Technician* - A Technician trained and competent in the area of asphalt mix design procedures.

B. QMS Certification Requirements

The basic requirements for these five types of certifications are listed as follows:

A. *QMS Level I Plant Technician*

1. Prerequisite(s): Introduction to Asphalt Pavements Course with Passing Exam.
2. Training**:**
   - Step 1: Level I Plant Technician OJT Program (See Section 12 for the QMS-3 checklist with instructions)
   - Step 2: Level I Plant Technician Class with Passing Exam
3. Experience Requirement: Minimum 10 working days per OJT Program *****

B. *QMS Level II Plant Technician*

CURRENT LEVEL I PLANT TECHNICIAN

1. Prerequisite(s): Minimum of 1 year's experience as Level I Plant Technician
2. Training:
   - Step 1: Approved Mix Design Course with Passing Exam
   - Step 2: Level II Plant Technician Class with Passing Exam
3. Experience Requirement: One (1) year as Level I Technician **or** Equivalent Experience as Determined by Asphalt Design Engineer.

C. *QMS Mix Sampling Technician*

1. Prerequisite(s): None
2. Training**:**
   - Step 1: Attend I Day Training Class
   - Step 2: Pass Written Exam and Complete Hands on Training

D. *QMS Roadway Technician*

1. Prerequisite(s): Introduction to Asphalt Pavements Course with Passing Exam.
2. Training:
   - Step 1: Roadway Technician OJT Program (See Section 12 for the QMS-5 checklist with instructions)
   - Step 2: Roadway Technician Class with Passing Exam
3. Experience Requirement: Minimum 10 working days per OJT Program ******

***** In lieu of the **10-day minimum** training and the minimum requirements in Parts II, III and IV of the OJT Checklist, a current asphalt plant mix testing certification from another State or other approved testing agency may be substituted. In this case, a copy of the certification shall be attached to the back of the OJT checklist. In addition, the OJT technician must perform one repetition of all requirements in Parts II, III, and IV in the presence of a certified plant technician prior to the check off by a final review technician. All other requirements of this OJT checklist shall be completed as specified.

****** In lieu of the **10-day minimum** training, either of the following may be substituted: 1) a current roadway paving certification from another state or other approved testing agency, or 2) Certification verifying a minimum of 1 year asphalt roadway paving experience from a supervisor who has direct knowledge of the applicant's roadway paving experience. In either case, the appropriate certification shall be attached to the back of the OJT checklist and included with the class application package. All other requirements of the OJT checklist shall be completed in full as specified, including the Final Review Check off by an Approved Final Review Technician.

E. *QMS Density Gauge Operator*

1. NCDOT TECHNICIANS
   a. Prerequisite(s): NCDOT Nuclear Safety Training Course
   b. Training: QMS Density Gauge Technician Course with Passing Exam.
   c. Experience Requirement: "Hands-on" QMS training after completion of class.
2. NON - NCDOT TECHNICIANS
   a. Prerequisite(s): Nuclear Safety Training Course
   b. Training: QMS Density Gauge Technician Course with Passing Exam.
   c. Experience Requirement: "Hands-on" training after completion of class.

F. *Mix Design Technician*

1. Prerequisite(s):
   (a) QMS Level I or II Technician **OR**
   (b) Completion of the Level I OJT Program and Enrollment in a Level I Class **OR**
   (c) Equivalent Experience as Determined by the Asphalt Design Engineer.
   (d) Completed Aggregate Consensus Properties Checklist

2. Training:
   Step 1: Approved Mix Design Course with passing exam
   Step 2: Check-off on Aggregate Consensus Property Tests (Contact Local QA Supervisor for Details)
   Step 3: NCDOT Mix Design Certification Class including Passing Exam.

A certificate will be issued for each type certification. Initial certification will generally be effective for five (5) years beginning from the date of passing the appropriate written exam until December 31st of the 5th year. A Mix Sampling Technician Certification has no expiration date. Failure of an exam will require the person to re-attend the regular class and pass the exam to become certified / re-certified. Upon two consecutive failures of the exam, the person will be required to perform the OJT (On-the-Job-Training) prior to re-attending the full class and taking the exam, unless otherwise approved by the Asphalt Design Engineer. Upon satisfactory completion of all requirements, the technician will be issued a certificate.

It should be noted that there is no certification for the *Introduction to Asphalt Pavements Course*. This is a very basic asphalt course designed to provide general knowledge of both plant and roadway operations to personnel with little or no experience. It is a prerequisite for several other certifications; therefore, a "completion" certificate will be issued to verify satisfactory completion. An online exam will be given at the end of the course and will be used to judge satisfactory completion.

3. Renewal Certification

A technician is required to renew his certification prior to the expiration of the current certificate. If a Technician's certification expires, he will not be permitted to perform the duties of this expired QMS Certification until renewal occurs. He will also be required to complete all initial requirements as outlined above. Requirements for renewal of certifications are as follows.

Level I & II Plant Technicians:	Attend the Level I or Level II plant Technician class including passing a written exam.
Roadway Technicians:	Attend the regular roadway technician class including passing a written exam.
Density Gauge Operators:	Attend the regular density gauge operators class, including passing a written exam, and a "hands-on" checkoff.
Mix Design Technicians:	Attend the regular mix design certification class including passing a written exam.

4. Loss of Certification by Suspension or Revocation

All certified technicians are subject to loss of their certification by suspension or revocation. The primary reason for the loss of a certification would be the falsifying of test results, records and/or reports. Other reasons that might lead to loss of certification include insubordination, gross negligence and apparent incompetence on the part of the technician. All reported occurrences of violations, misuse or abuse of this certification will be documented by the appropriate person(s).

The NCDOT Asphalt Design Engineer may suspend or permanently revoke any certification. Suspension or revocation of a certification will be sent by certified mail to the technician, the Quality Control Manager and the Corporate Head of the company that employs the technician.

A technician has the right to appeal any adverse action which results in suspension or permanent revocation of certification by responding, in writing, to the State Materials Engineer within 10 calendar days after receiving notice of the proposed adverse action. Failure to appeal within 10 days will result in the proposed adverse action becoming effective on the date specified on the certified notice. Failure to appeal within the time specified will result in a waiver of all future appeal rights regarding the adverse action taken. The technician will not be allowed to perform duties associated with the certification during the appeal process.

The State Materials Engineer will hear the appeal and make a decision within 7 days of hearing the appeal. Decision of the State Materials Engineer shall be final and shall be made in writing to the technician.

If a certification is temporarily suspended, the technician must pass any applicable written examination, any proficiency examination, and other requirements as required by the Engineer prior to having the certification reinstated.

1.3.8 NCDOT Asphalt Technician Certification - Enrollment Procedures

The Department requires all students to enroll in the appropriate class(es) prior to attendance. Below are the guidelines for class enrollment. It is extremely important that these guidelines be followed in order to ensure correct enrollment data.

1. Students will only be enrolled by submission of application, applicable fee, and all other required documents. Class space or slots will not be held or reserved.
2. Mailed or online applications are accepted for enrollees. No faxed applications will be accepted.
3. Required verification of prerequisites must be marked on and/or attached to the application form. Applicants must meet all prerequisites at time of application submittal.
4. Non-NCDOT agencies must attach a non-refundable check(s) to the application. NCDOT Divisions / Units funds will be drafted to cover their fees.
5. When registering multiple students, send one check per class. One check per student is preferred.

6. Registration form & payment must be received no more than 90 and no less than 7 calendar days prior to class start date, unless otherwise noted. Application(s)/check(s) will be returned if not received within this time frame.
7. NCDOT personnel registered through HiCAMS are not enrolled until all required documentation is received and approved by the Materials & Tests Unit. Non-NCDOT personnel are not enrolled until all required documentation is received and approved via hard copy. Confirmation notices will be sent to all enrolled students. If confirmation notice is not received within 5 business days of class start date, notify the appropriate class contact person.
8. Substitution, deletion or transfer of enrolled students must occur no later than 5 business days prior to class start date, and must be approved by the Materials & Tests Unit conducting the class. If substitution or transfer of an enrolled student is allowed, a new confirmation notice will be furnished.
9. Absent students Will Not be transferred to another class. If enrollment is desired for a different class, the enrollment process must be repeated for that student, including payment of the fee.
10. Applications received after a class is full will be returned. Maximum class size depends on the classroom size.
11. Level I, Level II, and Mix Design Certification Classes are subject to cancellation if not more than 10 students are registered within 7 calendar days of class start date.
12. QMS Roadway Classes are subject to cancellation if not more than 20 students are enrolled within 7 calendar days of class start date.
13. Students attending a class but failing to pass the exam must repeat the enrollment process and pay the class fee and attend the class again before taking the exam. These applicants should mark "Retest" on their application.
14. Any student attending the class but not taking the exam for a valid reason, shall have 10 calendar days to take the exam without having to reattend the class. This must be coordinated through the Materials & Tests Asphalt Laboratory.

PREREQUISITES FOR NCDOT QMS CLASSES

	Application	Intro. (1)	OJT (2)	Mix Design (3)	Level I (4)
Introduction to Asphalt Pavements	X				
Level I Plant Tech. (New)	X	X	X		
Level I Plant Tech. (ReCert.)	X				
Level II Plant Tech. (New)	X			X	X
Level II Plant Tech. (ReCert.)	X				
Roadway Tech. (New)	X	X	X		
Roadway Tech. (ReCert.)	X				

(1) Either attach copy of Introduction to Asphalt Pavements certificate of completion or email confirmation of completion

(2) Attach front & back pages of completed OJT checklist to application. Applicants using exception for being certified in another state must attach copy of that certification. Applicants utilizing the exception for 1 year's roadway paving experience, must attach the experience certification.

(3) Attach copy of Mix Design Course certificate.

(4) Attach copy of Level I Plant Technician certificate.

1.4 QMS LABORATORY TECHNICIAN ASSESSMENT PROGRAM

1.4.1 General

The mission of the Assessment Program is to determine the competency of the Quality Control and the Quality Assurance technicians in the QMS program by observation and by comparison of sampling and testing results.

1.4.2 Technician Assessments

It is the intent of this program to validate the competency of the personnel performing quality control and quality assurance testing of Asphalt Mix and QA/QC Laboratory Equipment used in the QMS program is in compliance with specifications. In order to determine this competency, the following rating system will be used to grade QMS technicians:

- **Satisfactory** – all test procedures are performed with no corrections or exceptions.
- **Acceptable with Exceptions** – while performing test procedures, the technician made mistakes, but did not or could not make corrections during the procedure. The technician will be reassessed.
- **Unsatisfactory** – while performing test procedures, the technician made mistakes and did not make corrections during the procedure. The technician demonstrated a lack of knowledge about the testing procedures. This may require remedial training, and could result in suspension of certification. The technician will be reassessed.

A review by the Engineer may be performed prior to any action in the case of an unsatisfactory assessment. Any unsatisfactory assessments that the Engineer regards as requiring more than remedial training, or if remedial training has not been effective, will be brought to the attention of the Review Committee. A reassessment will be performed on any technician that receives any rating other than satisfactory. It will be the determination of the Engineer if the reassessment process should include an additional material correlation. An assessment can be performed at any time regardless of the fact that the material is being transported to a NCDOT project or private work.

The technician will be allowed two postponements in the event of an emergency that prevents him/her from meeting an agreed upon assessment schedule. If the assessor has made three attempts to assess the technician, or if the requested postponement does not fit the definition of an emergency, the Engineer will immediately notify the technician's supervisor to set a date and time for the assessment. An emergency, in this case, would be defined as an event requiring the complete attention of the technician to the exclusion of performing any testing.

1.4.3 Frequency

The following guidelines shall be used in determining assessment frequencies for personnel:

A) All Level I and Level II Technicians are eligible to be assessed.
B) QA Supervisors shall be assessed once a year.
C) All Final Review Technicians shall be assessed once a year.
D) All technicians who are actively testing asphalt mix are subjected to be assessed.

1.4.4 Sampling

All personnel being assessed shall perform all sampling in accordance with Section 7.5. In addition, an IA portion of the sample will be taken at the same time as the QC or QA sample. In conjunction with QA approval an additional sample may be directed at any time and any location during production (in lieu of the next randomly scheduled sample for that increment).

1.4.5 Testing

All personnel being assessed shall perform all tests in accordance with their respective procedures as stated in Section 7.

1.4.6 Equipment

All equipment used in the testing must be properly calibrated and maintained as required by Section 7.2 prior to the QC or QA technicians performing the tests. The assessor will perform an equipment assessment during which they will verify the calibration of the testing equipment. The equipment assessment will typically be performed during the scheduled technician assessment visit. If during the assessment visit, equipment is found to out of specification, the equipment must be brought into compliance or replaced as per the requirements of Section 7.2. Once the equipment

issue has been resolved, notify the assessor so the assessment can be completed. If the laboratory fails to comply with the above requirements, the Engineer may stop production as detailed in Section 609-5(b) of the Specifications. If the verification determines that the equipment is out of calibration, testing of the mix shall stop and cannot resume until the equipment is brought into compliance or is replaced by equipment that is within compliance.

1.4.7 Loss of Certification

All certified technicians are subject to the loss of certification by suspension or revocation as defined in Section 1.3.7. In addition, the following provisions shall apply to any technician assessed under this program.

If the technician receives an unsatisfactory on any procedure, the assessor will review all parts of each test method that were performed incorrectly to ensure that the technician clearly understands their mistakes. A reassessment will be required only on those test procedures that received an unsatisfactory. Following any unsatisfactory assessment, the QC Manager/QA Supervisor will be notified by e-mail.

The technician will have the option of performing the reassessment for each unsatisfactory procedure on the same day if mutually agreed upon by the assessor and the technician. [A Process Control (PC) sample can be used for this purpose]. However, the technician can request that the reassessment occur at a later date. If this option is used by the technician, the QC Manager/QA Supervisor should review the assessment with the technician and perform whatever corrective actions they deem necessary within ten (10) calendar days. The Engineer will contact the assessor who will then perform a reassessment within ten (10) calendar days.

Failure by the technician to perform the proper methods after reassessment will result in an overall rating of Unsatisfactory and the following actions may occur:

1. Suspension:

Failure of the QC/QA technician to satisfactorily complete the reassessment may result in the suspension of the technician's certification. Notification of the suspension will be in the form of a letter to the company's management or the appropriate Division Engineer. Once a technician's certification is suspended, he/she will be required to complete the OJT program and have a satisfactory assessment before their certification will be reinstated. However, the technician can appeal, but the certification will remain suspended until the appeal process is completed. If the assessment following the OJT process is unsatisfactory, the technician's certification will be revoked. However, the technician can request a hearing with the Review Committee. The Review Committee will review the assessment documentation, as well as any other documentation deemed necessary. The Review Committee can request that additional OJT be performed, overturn the reassessment and have a new assessment performed, or they can uphold the revocation of certification.

2. Revocation:

Revocation of the technician's certification may occur if an unsatisfactory reassessment occurs after the OJT completion. Also, if the technician has two suspensions in the same certification period, their certification may be revoked. The final revocation decision will be made by the Review Committee and will be effective on the date of the letter sent to the technician. Copies of the letter will be sent to the producer, the Division Engineer, the Division QA Supervisor and FHWA.

3. Reinstatement of Certification:

All certified technicians may regain their certification in the manner defined in Section 1.3.7.

1.4.8 Correlation

At the completion of the assessment, the assessor will retain the IA portion of the sample and a copy of the QC or QA worksheet. This sample will be returned to either the Central Asphalt Laboratory or to an appropriate M&T Regional Laboratory. The sample information will be entered into HiCAMS by the assessor. Upon completion of the tests, the assessor will correlate the results. Depending on the outcome of the sample correlation, an investigation may be conducted to determine the cause of any testing disparity.

1.4.9 Record Keeping

At the completion of each assessment, the assessor will provide a completed hard copy of the M&T 901 form to the assessed technician. The assessor will also send a follow-up copy via email to the QC Manager/QA Supervisor after each assessment.

1.5 ETHICS AND FALSIFICATION

False statements, misrepresentations, false reporting, or false claims made concerning the acceptability of materials on highway projects are prohibited by North Carolina General Statutes and the United States Code of Federal Regulations.

Fraudulent activities include: falsification of test results, false documentation of observations, falsification of inspection records, adjustments to the process, discarding of samples and/or test results, or any other deliberate manipulation of the facts. Such activities will result in the revocation of the applicable person's QMS certification. In addition, state and/or federal authorities may also pursue criminal charges. The Engineer will determine acceptability of the mix and/or pavement represented by the falsified results or documentation. If the mix and/or pavement in question is determined to be acceptable, the Engineer may allow the mix to remain in place at no pay for any asphalt mix, binder, or other mix components. If the mix and/or pavement represented by the falsified results is determined not to be acceptable, it shall be removed and replaced with mix that meets the Specifications.

1.5.1 North Carolina Requirements

The following is set forth in G.S. § 136-13.2, "Falsifying Highway Inspection Reports":

(a) Any person who knowingly falsifies any inspection report or test report required by the Department of Transportation in connection with the construction of highways, shall be guilty of a Class H felony.

(b) Any person who directs a subordinate under his direct or indirect supervision to falsify an inspection report or test report required by the Department of Transportation in connection with the construction of highways, shall be guilty of a Class H felony.

1.5.2 Federal Requirements

Any suspected fraudulent activity – whether it involves a Federal or State employee, contractor, subcontractor, or any other participant in a Federally-assisted highway project – should be reported to the Office of the Inspector General (OIG) Office of Investigations, USDOT. The OIG is responsible for investigating charges of fraud, waste, and abuse in FHWA programs.

Code of Federal Regulations (23 CFR 635.119) requires that the Office of Inspector General (OIG) will maintain a hotline for receiving allegations of fraud, waste, abuse, or mismanagement in U.S. Department of Transportation (DOT) programs or operations. Allegations may be reported 24 hours a day, seven days a week by DOT employees, contractors, or the general public. The FHWA Fraud Notice (Form FHWA 1022) is required to be posted on all Federally-Funded Construction Projects. This awareness poster points out the consequences of impropriety on the part of any Contractor or Department employee working on Projects.

This Page Intentionally Left Blank

U.S. Department
of Transportation

Federal Highway
Administration

NOTICE

The highway construction underway at this location is a Federal or Federal-aid project and is subject to applicable State and Federal laws, including Title 18, United States Code, Section 1020, which reads as follows:

"Whoever, being an officer, agent, or employee of the United States, or any State or Territory, or whoever, whether a person, association, firm or corporation, knowingly makes any false statement, false representation or false report as to the character, quality, quantity, or the cost of the material used or to be used, or the quantity or quality of the work performed or to be performed, or the costs thereof in connection with the submission of plans, maps, specifications, contracts, or costs of construction of any highway or related project submitted for approval to the Secretary of Transportation; or

Whoever, knowingly makes any false statement, false representation, false report, or false claim with respect to the character, quality, quantity or cost of any work performed or to be performed, or materials furnished or to be furnished, in connection with the construction of any highway or related project approved by the Secretary of Transportation; or

Whoever knowingly makes any false statement or false representation as to a material fact in any statement, certificate, or report submitted pursuant to the provisions of the Federal-Aid Road Act approved July 11, 1916 (39 Stat. 355) as amended and supplemented,

Shall be fined under this title or imprisoned not more than five years, or both."

Any person having reason to believe this statute is being violated should report the same to the agency representative(s) named below.

(Federal-aid Projects Only)
State Highway Department

Michael L. Holder, PE
NCDOT – Chief Engineer
1536 Mail Service Center
Raleigh NC 27699-1536

(Both Federal and Federal-aid Projects)
Federal Highway Division Administrator

John F. Sullivan, III, PE
FHWA – NC Division
310 New Bern Avenue, Suite 410
Raleigh, NC 27601-1418

(Both Federal and Federal-aid projects)

Department of Transportation
Office of Inspector General
Toll Free Hotline
1-800-424-9071

Form FHWA-1022 (Rev 11-11) **NCDOT Update 11/2014**

SECTION 2

MATERIALS USED IN ASPHALT PAVING

2.1 DESCRIPTION OF ASPHALT PAVING MATERIALS / PAVEMENTS

Asphalt pavements are composed of three basic components - 1) asphalt binder, 2) aggregates, and 3) air voids. Aggregates are generally classified into two groups - coarse and fine, and normally constitute 90 to 96 percent by weight of the total mixture. Asphalt binders are classified by various grading systems and normally constitute 4 to 10 percent of the total mixture. Probably the most important but often overlooked component of an asphalt mix is air voids. In this section, only asphalt binder, aggregates and other additives are discussed. Air voids and the role it has in asphalt mixtures and pavement performance will be discussed in later sections of this manual.

There are many different types of asphalt and many different types of aggregates. Consequently, it is possible to make different kinds of asphalt pavements. Among the most common types of asphalt pavements are:

* Dense-Graded Hot Mix Asphalt (HMA);
* Warm-Mix Asphalt (WMA);
* Open-Graded Asphalt Friction Course; Permeable Asphalt Drainage Course
* Ultra-Thin Bonded Wearing Course
* Asphalt Surface Treatments;
* Emulsified Asphalt Mixes (Cold Mixes);
* Others, SMA, In-Place Recycled Mixes (both hot and cold)

This manual primarily addresses dense-graded asphalt concrete which is a paving material that consists of asphalt binder and mineral aggregate with appropriate air voids. The asphalt binder, either an asphalt cement or a modified asphalt cement, acts as a binding agent to glue aggregate particles into a dense mass and to waterproof the mixture. When bound together, the mineral aggregate acts as a stone framework to impart strength and toughness to the system. The performance of the mixture is affected both by the properties of the individual components and the combined reaction in the system.

2.3 TECHNICIAN RESPONSIBILITIES

The Contractor's Quality Control technicians and the DOT's Quality Assurance technicians are responsible for the way asphalt and aggregate materials are handled, stored, sampled, mixed, hauled, placed, and compacted. They have responsibilities to check such things as material sources, grades, types, temperatures, and moisture contents. Both must also be fully capable of reviewing and interpreting mix design data, laboratory test results and specifications, when necessary, as well as being able to perform sampling and testing.

The technician will be unable to perform his job without a working knowledge of the materials from which an asphalt concrete pavement is made, particularly material characteristics and their role in pavement performance. He must also understand how improper handling of materials can adversely affect their properties and ultimately, their behavior in the finished pavement. Having such information will give him the confidence to make proper day-to-day decisions and will eliminate the role of guesswork in the job, ensuring that good quality control is maintained.

Materials inspection and control demands accurate and thorough documentation. Facts, figures, dates, names, locations, and conditions are important elements in daily record-keeping. Experience has taught us over the years that a scrap of information that seems unimportant when recorded can later turn out to be the very piece of information needed to analyze a serious problem.

2.4 ASPHALT MATERIALS

2.4.1 Asphalt Binder

As mentioned earlier, one of the basic components of asphalt mixes is asphalt binder. Asphalt binder at normal atmospheric (ambient) temperatures is a black, sticky, semi-solid, highly viscous, cementitious material. Asphalt binder is typically a solid to semisolid at normal air temperatures and becomes a liquid at high temperatures. Asphalt is made up largely of a hydrocarbon called bitumen and therefore is often called a bituminous material. Because asphalt binder is sticky, it adheres to aggregate particles and can be used to cement or bind the aggregate in an asphalt concrete mixture. Asphalt binder is an excellent waterproofing material and is unaffected by most acids, alkalis, and salts. This unique combination of characteristics and properties is a fundamental reason why asphalt is an important paving material.

2.4.2 Refining Crude Petroleum

Asphalt is a constituent of crude petroleum (crude oil). Most crude oil sources contain some asphalt. However, some crude oil sources may be almost entirely asphalt and some crude oils contain little or no asphalt. The primary source for asphalt cement used in the United States today is from the refining of crude petroleum (crude oil). Crude petroleum from oil wells is separated into its constituents or fractions in a refinery. (see Fig. 2-1). Accordingly, asphalt is obtained as a residue or residual product, and is valuable and essential for a great variety of engineering and architectural uses. Petroleum asphalt for use in pavements is usually called paving asphalt, or asphalt binder to distinguish it from asphalt made for non-paving uses, such as roofing and industrial purposes.

2.4.3 Classification and Grading of Paving Grade Asphalts

Paving grade asphalts are classified into three general types:

(1) Asphalt Cements (Binders)
(2) Emulsified Asphalts
(3) Cutback Asphalts*

**It should be noted that North Carolina Specifications do not allow for any use of cutback asphalts primarily due to environmental concerns.*

Asphalt Binder is the residual by-product from the distillation process. Emulsified asphalts and cutback asphalts are then made from asphalt cements and are frequently referred to as liquid asphalts. Included in the Standard Specifications and Special Provisions are the specific requirements for the various grades and types of asphalt materials. Figures 2-3 and 2-4 included in this manual summarize the various grades and typical applications of asphaltic materials used in pavement construction by the NCDOT. However, the technician should always review the project special provisions to determine if there are any additional grades or specific requirements which must be utilized on a specific project. Paving grade asphalt binder must be made fluid (liquefied) for handling and use during construction operations, such as pumping through pipes, transporting in tanks, spraying through nozzles and mixing with aggregate. Asphalt binder can be made temporarily fluid (liquefied) for construction operations in three ways:

1. By heating the asphalt binder with indirect heat in a storage tank: After construction operations (mixing, spraying, etc.) the hot liquid asphalt binder cools and changes from a fluid back to a semi-solid condition at ambient air conditions. During the heating process the asphalt binder temperature must not exceed the manufacturers recommended temperature. If the asphalt binder is overheated, a process known as oxidation will occur. Oxidation causes the asphalt to become more brittle, leading to the term oxidative, or age, hardening. Oxidation occurs more rapidly at higher temperatures. A considerable amount of hardening occurs during mix production, when the asphalt binder is heated to facilitate mixing and compaction. When pavement construction operations are finished, the asphalt binder cools and reverts to its normal semi-solid condition and functions as the cementing and waterproofing agent that makes the pavement stable and durable.

2. By emulsifying the asphalt with water: Emulsified asphalts are a mixture of asphalt cement, water, and an emulsifying agent (such as soap). While asphalt and water ordinarily do not mix, they can be made to mix by mechanically milling asphalt in a colloid mill with water and a small amount of emulsifying agent under high pressure. The resulting product, called emulsified asphalt, is a fluid and can be handled and sprayed at relatively low temperatures. Emulsified asphalts are normally liquid at room temperature. After application, the water evaporates and the asphalt particles coalesce (join together) into a continuous film that bonds the aggregate particles together. When the water and asphalt separate, it is said that the emulsion breaks or sets and the asphalt residue remains.

3. By dissolving the asphalt with a petroleum solvent such as naphtha, gasoline, kerosene, or diesel oil: Mixing the solvent with the asphalt liquefies the asphalt at ambient air temperatures such that it can be sprayed or mixed with aggregate during construction. The solvent then evaporates over time, the residual asphalt returns to its semi-solid state and performs its intended function. As noted earlier, cutback asphalts are not used by NCDOT because of environmental concerns.

(A) Asphalt Binders

Performance Grade "binder" specifications are based on tests which measure physical properties of the asphalt "binder" that can be related directly to field performance by engineering principles. The tests are conducted at temperatures encountered by in-service pavements. These "binder" specifications have now been adopted by AASHTO and are referenced under AASHTO M 320.

Performance graded (PG) binders are designated with grades such as PG 64-22. The first number, 64, is often called the "high temperature grade." This means that the binder would possess adequate physical properties to perform satisfactorily at least up to 64°C (147°F). This would be the high pavement temperature corresponding to the climate in which the binder is actually expected to satisfactorily serve. Likewise, the second number, -22, is often called the "low temperature grade" and means that the binder would possess adequate physical properties in pavements to perform satisfactorily at least down to -22°C (-8°F).

Additional consideration in selecting the grade to be used is given to the time of loading (vehicle speed on open highway, city streets, intersections, etc.) the magnitude of loads (heavy trucks), and at what level the material is within the pavement structure. Figure 2-3 shows the current binder grades in AASHTO M 320. Under these specifications, the binder grade used in standard asphalt mix pavements in North Carolina is Performance Grade 64-22 (PG 64-22). Other grades are required under certain conditions, such as heavy traffic and in recycled mixes.

(B) Emulsified Asphalts

Another method to liquefy the asphalt is to emulsify the asphalt in water. Asphalt liquefied by this method is known as emulsified asphalt. With emulsified asphalt, the basic idea is that the water will escape by absorption and evaporation, leaving the asphalt binder to do its job. The object is to make a dispersion of the asphalt binder in water, stable enough for pumping, prolonged storage, and mixing. Furthermore, the emulsion should break down quickly after contact with aggregate in a mixer, or after spraying on the roadbed. Upon curing, the residual asphalt retains all of the adhesive, durability, and water-resistant properties of the asphalt binder from which it was produced.

By proper selection of an emulsifying agent and other manufacturing controls, emulsified asphalts can be produced in several types and grades. By choice of emulsifying agent, the emulsified asphalt can be anionic (asphalt globules electro-negatively charged) or cationic (asphalt globules are electro-positively charged) or nonionic (asphalt globules are neutrally charged). In practice, the first two types are ordinarily used in roadway construction and maintenance activities. The letter "C" in front of the emulsion type denotes cationic. The absence of the "C" denotes anionic or nonionic. For example, RS-1 is anionic or nonionic and CRS-1 is cationic.

Because particles having a like electrostatic charge repel each other, the asphalt globules are kept apart until the emulsion is deposited on the surface of the aggregate particles. At this point, the asphalt globules coalesce (join together) through neutralization of the electrostatic charges or water evaporation. Coalescence of the asphalt globules occurs in rapid and medium-setting grades. When this coalescence takes place, it is referred to as "breaking" or "setting".

Emulsions are further classified on the basis of how quickly the asphalt will coalesce; i.e., revert to asphalt binder. The terms RS, MS, and SS have been adopted to simplify and standardize this classification. They are relative terms only and mean rapid-setting (RS), medium-setting (MS), and slow-setting (SS). The tendency to coalesce is closely related to the mixing of an emulsion. An RS emulsion has little or no ability to mix with an aggregate, an MS emulsion is expected to mix with coarse but not fine aggregate, and an SS emulsion is designed to mix with fine aggregate.

Additional grades of high-float medium-setting anionic emulsions, designated HFMS, have been added to standard AASHTO and ASTM specifications. These grades are used primarily in cold and hot plant mixes, coarse aggregate seal coats, road mixes, and tack coats. High float emulsions have a specific quality that permits a thicker film coating without danger of runoff. A quick-set type of emulsion (QS) has been developed for slurry seals. Its use is rapidly increasing as the unique quick-setting property solves one of the major problems associated with the use of slurry seals.

(C) Cutback Asphalts

As noted earlier, cutback asphalts are not used by NCDOT because of environmental concerns and therefore are not discussed further in this Manual.

2.4.4 Characteristics of Asphalt

The characteristics of asphalt binder under varying temperatures, rates of loading, and stages of aging determine its ability to perform as a binder in the pavement system. The tests and specifications used to measure and control these characteristics are discussed in *Performance Graded Asphalt Binder Specification and Testing*, (SP-1), The Asphalt Institute.

Figure 2-1
Typical Refining Process

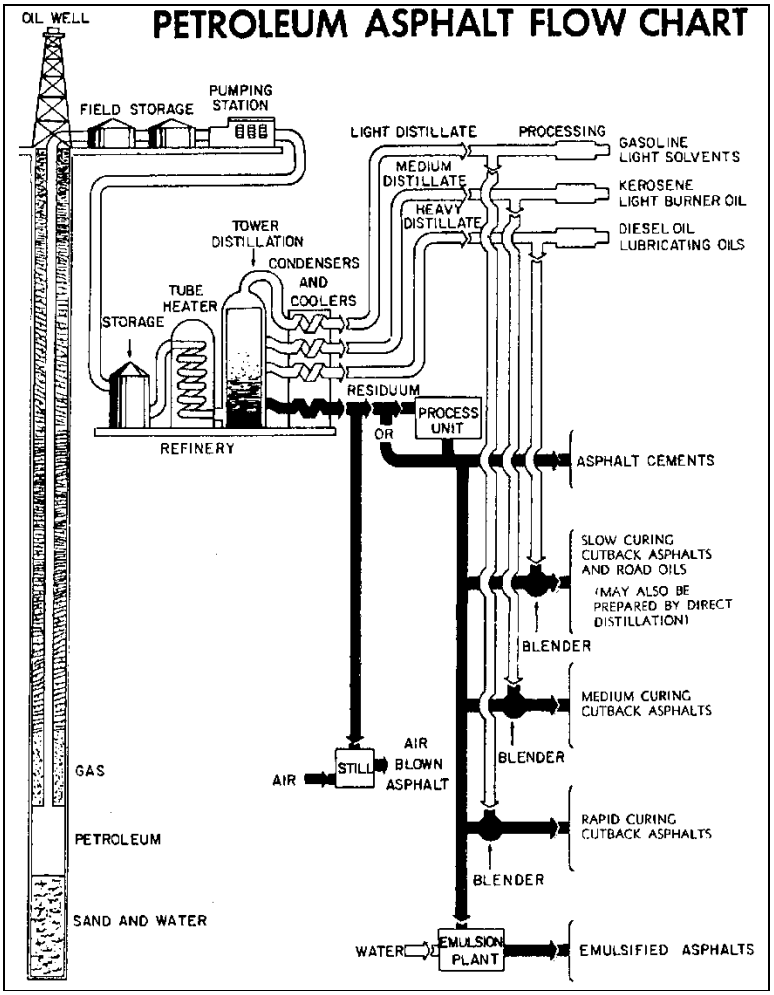

2.4.5 Testing Properties of Performance Graded Asphalt Binders

A key feature in the Performance Grading system is that physical properties are measured on binders that have been laboratory aged to simulate their aged condition in a real pavement. Various tests are used for determining and measuring the properties of an asphalt binder. The ASTM and AASHTO references that describe in detail the equipment and procedures required to conduct these tests are available from a number of sources. These tests are normally conducted by the asphalt supplier or the Materials and Tests Laboratory in Raleigh. The specifications require that the Contractor furnish a certified delivery ticket for all asphalt materials to be used on a project (See Article 1020-1 of the Standard Specifications).

2.4.6 Specific Gravity of Asphalt Binder

Specific gravity is the ratio of the weight of any volume of a material to the weight of an equal volume of water, both at a specified temperature. As an example, an aggregate with a specific gravity of 2.653 weighs 2.653 times as much as water. Asphalt binder has a specific gravity of approximately 1.030 at 60° F (15.6° C).

The specific gravity of an asphalt binder is not normally indicated in the job specifications. Nonetheless, knowing the specific gravity of the asphalt binder being used is important for two reasons. Asphalt binder expands when heated and contracts when cooled. This means that the volume of a given amount of asphalt binder will be greater at higher temperatures than at lower ones. Specific gravity measurements provide a means for making temperature-volume corrections, which are discussed later.

2.4.7 Asphalt Additives

(A) Silicone: Silicone is used in asphalt because of its foam suppressing capabilities and also because it helps prevent the tearing and pulling of an asphalt mix behind the paving machine. Section 620-3 of the *Standard Specifications* requires that silicone is to be added to asphalt binder used in all surface course mixtures, including open-graded asphalt friction courses, unless otherwise directed. The silicone is added at the rate of 1 ounce per 2000-2500 gallons (4 ml per 1000-1250 liters) of asphalt binder and may be added either at the asphalt plant or at the supplier's terminal when so noted on the delivery ticket. The silicone should be adequately circulated throughout the asphalt binder storage tank prior to use. The brand used must have been previously approved by the Department. A listing of approved sources of silicone may be obtained through the M&T Lab in Raleigh, N.C.

(B) Anti-Strip Additive: Heat stable liquid chemical or hydrated lime anti-strip additives are required to be incorporated into asphalt mixes in an effort to prevent the separation of the asphalt from the aggregate particles (stripping). Chemical anti-strip additives are blended with the asphalt binder prior to introduction of the binder into the aggregate. Hydrated lime is blended with the aggregate prior to the aggregate entering the dryer. All mixes including recycled mixes require either chemical or lime anti-strip additive or a combination of both. The technician should always refer to the JMF to determine the type, rate required and the brand specified. The Contractor may use a different brand or grade, provided the proper TSR testing has been performed with satisfactory results prior to its use. If a different rate is required, the Contractor must obtain a new JMF.

(C) Warm-Mix Asphalt Additives: Chemical additives that allow for lower mixing and placement temperatures. These additives are commonly categorized as: foaming agents, surfactants, or wax-based agents. The technician should always refer to the JMF to determine the type, rate required and the brand specified.

2.4.8 Asphalt Binder Storage

The asphalt binder storage capacity at the plant must be sufficient to allow uniform plant operation. Where more than one grade of asphalt binder is required for a project, at least one tank will be needed for each grade or the tank must be completely emptied before a different grade is added. Different grades must not be mixed.

Asphalt contents of storage tanks must be capable of being measured so that the amount of materials remaining in the tank can be determined at any time. This is necessary in order to determine the amount of an additive to be added, when required. They also must be heated to keep the asphalt fluid enough to move through the delivery and return lines; however, the maximum storage temperature should not exceed the supplier's recommendation. Heating is done either electrically or by circulating steam or hot oil through coils in the tank. Regardless of the heating method used, an open flame must never come in direct contact with the tank or contents. Where circulating hot oil is used, the oil level in the reservoir of the heating unit should be checked frequently. A drop in the level could indicate leakage of the hot oil into the tank, leakage which results in contamination of the asphalt. All transfer lines, pumps and weigh buckets also must have heating coils or jackets so that the asphalt will remain fluid enough to pump. One or more thermometers must be placed in the asphalt feed line to ensure control of the asphalt temperature, as it is being introduced into the mixer or drum. The asphalt tanks must be equipped with a circulation system capable of uniformly dispersing and mixing additives throughout the total quantity of asphalt binder in the tank.

Adequate pumps must be furnished so that asphalt binder can be unloaded from tankers and still continue to operate the plant. A sampling valve or a spigot must be installed in the circulating system or tank to allow sampling of the asphalt. When sampling from the circulating system, exercise extreme care, as pressure in the lines may cause the hot asphalt binder to splatter.

Safety: **Asphalt binder, if heated to a high enough temperature, will flash in the presence of a spark or open flame. The Minimum Flash Point temperature specified for all performance graded (PG) asphalts is 446°F (230°C). This temperature is well above the temperatures normally used in paving operations; however, to be sure there is an adequate margin of safety, the flash point of the asphalt should be known.**

2.4.9 Delivery and Acceptance of Asphalt Materials

Obtain Performance graded asphalt binder (PGAB) only from sources participating in the Department's Quality Control/Quality Assurance (QC/QA) program. The PGAB QC/QA program is designed to give Producers or Suppliers more

responsibility for controlling the quality of material they produce and to utilize the QC information they provide in the acceptance process by the Department. It requires Producers or Suppliers to perform QC sampling, testing, and recordkeeping on materials they ship for use by the Department. Also, it requires the Department to perform QA sampling, testing, and recordkeeping to confirm the performance of the Producer's quality control plan set forth in the QC/QA program.

NCDOT specifications (Article 1020-1) require that asphalt materials used in asphalt pavement construction be tested and certified as meeting all applicable specification requirements. This certification for acceptance purposes is furnished with each delivered load of material, subject to certain conditions outlined in the specifications. This Article of the specifications also requires that all asphalt transport tankers, rail, and truck tankers must have a sampling valve in accordance with Asphalt Institute Publication MS-18, Sampling Asphalt Products for Specification Compliance and ASTM D 140 or a comparable device acceptable to the Engineer. A picture of a typical sampling device is shown in Figure 2-2.

Figure 2-2
Typical Liquid Asphalt Sampling Device

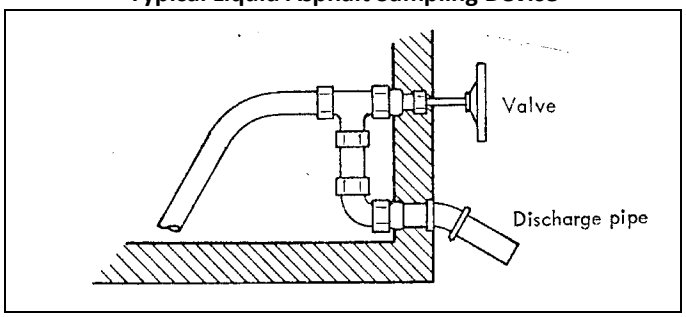

The sample must be taken from the sampling device on the transport tanker. Sample containers must be new and are available from the M & T Laboratory. Glass containers should not be used. The sample container should not be washed, rinsed out, or wiped off with oily cloths. The top of the container must fit securely. In obtaining a sample from the sampling valve, approximately 1 gallon (4 liters) of the asphalt material should be drawn from the valve and discarded for sampling purposes. The container should then be filled from the valve and the lid securely fastened to the container. Samples shall not be transferred from one container to another. The sample should then be forwarded to the Materials and Tests Unit with the appropriate sample identification cards.

This Article also outlines the information that is to be shown on load delivery tickets for all asphalt materials. Also included is an example statement of certification forms which must be included on the delivery ticket. The Contractor must furnish a ticket from the supplier, which includes a statement of certification of the grade and amount of asphalt material, including a statement relative to the brand, grade, and quantity or rate of anti-strip additive added to the material. In addition, a separate statement of certification that the tanker was clean and free of contaminating material is required from the transporter on the ticket. Each certification shall be signed by an authorized representative of the supplier or transporter. These certifications may be either stamped, written, or printed on the delivery ticket, or may be attached to the delivery ticket. Failure to include or sign the certifications by either the supplier or transporter will be cause to withhold use of the material until a sample can be taken and tested, except where an alternative testing and invoicing procedure has been preapproved by the Engineer.

It will not be necessary to fill out Materials Received Reports (MRRs) for asphalt binder or emulsions. All asphalt materials will be accepted by certification in accordance with Section 1020-1 of the Standard Specifications and the following procedures. When a shipment of asphalt binder is received at the asphalt plant, a copy of the bill of lading will be furnished to the QA Supervisor, attached to the appropriate QC-1 report from that plant, and maintained in the appropriate plant file within the QA Lab. Detailed procedures for maintaining bills of lading for prime and tack coat materials are covered in Section 9.1.

M&T Unit representatives will take verification samples from the asphalt terminals, which will be logged in and tested at the M&T central facility with results entered into an Asphalt Materials Database. If a sample fails but the failure is considered by the Engineer to be immaterial, the terminal will be notified of the test results and allowed to continue shipping, provided corrective action is taken. Samples will continue to be taken at the normal frequency.

If a sample fails and the failure is considered by the Engineer to be significant, the terminal will be notified of the results and they will be instructed to discontinue shipments and take corrective action. M&T will resample and retest the material at the terminal. Any materials from this batch in a Contractor's storage tank will be evaluated for acceptability.

In the case of a significant material failure, the Engineer will send a failure notification form to all QA Supervisors. The QA Supervisors will review the bills of lading in their files to determine if they have received any material from that batch. If so, they will notify the appropriate Resident Engineers. They will then review the appropriate QC records for any possible related test deviations. The failure notification form will include an investigation section to be filled out by the QA Supervisor. They should include information concerning test deviations and any actions they took concerning or involving the Resident Engineers on this form and attach it to the appropriate bill of lading and QC-1 report in their file and send a copy to the Testing Engineer.

Resident Engineers will not be receiving direct notification of failures from the Engineer because there is no way he can determine who should receive the notifications. By sending these notifications to the QA Supervisors, a relatively small number of forms can be sent out and the appropriate Resident Engineers will be notified by the QA Supervisors. All actions taken by the QA Supervisors and Resident Engineers will be noted by the Asphalt Design Engineer in the binder database summary.

Figure 2-3
Performance-Graded Binder Grades (from AASHTO M 320)

High Temperature Grade	Low Temperature Grade
PG 58	(-) 16, 22, 28, 34, 40
PG 64*	(-) 10, 16, **22***, 28, 34, 40
PG 70	(-) 10, 16, 22, 28, 34, 40
PG 76	(-) 10, 16, 22, 28, 34

***Standard Grade based on high and low pavement temperature requirements for NCDOT Asphalt mixes is PG 64-22 unless otherwise specified.**

Figure 2-4
Emulsified Asphalts

Type	Grade	Uses
Anionic	RS-1h	Tack Coat; AST Seal Coat
(from AASHTO M 140)	HFMS-1	Tack Coat
	CRS-1	Tack Coat; AST Seal Coat
Cationic	CRS-1h	Tack Coat; AST Seal Coat
(from AASHTO M 208)	CRS-2	Tack Coat; AST Mat Coat; AST Seal Coat
	CRS-2P	AST Mat Coat; AST Seal Coat
	CSS-1h	Prime Coat
	CQS-1h	Prime Coat

2.4.10 Temperature-Volume Relationships of Asphalts

As with all liquids and most solids, asphalt expands when heated and contracts when cooled. These changes in volume must be taken into consideration because, regardless of the temperature at which asphalt is shipped and stored, the basis for buying and selling asphalt materials, for making asphalt plant settings and mix design calculations is the asphalt's volume and specific gravity at 60°F (15.6°C).

The calculation involved is rather simple. It requires that two pieces of information be known:

- The temperature of the asphalt when used.
- The asphalt specific gravity or Group No. @ 60°F (15.6°C).

The asphalt temperature and specific gravity are used to locate the proper correction factor on one of the following tables. These tables have been in use for at least three decades and are the only data currently available for temperature corrections above 300°F (149°C). (See Figure 2-5)

When the Technician knows the asphalt temperature and the necessary correction factor, the following formula is used to calculate the asphalt volume at 60°F (15.6°C):

$$\boxed{V_{60} = V_t\ (CF)}$$

where, V_{60} = Volume at 60°F (15.6°C)
V_t = Volume at given temperature
CF = Correction Factor from TABLE.

The following example illustrates how the calculation is made:

A truck has just delivered 5,000 gallons (19,000 liters) of asphalt at a temperature of 300°F (149°C). The Specific Gravity (Sp.Gr.) of the asphalt is 0.970. What would the asphalt's volume be at 60°F (15.6°C)?

Because the asphalt Specific Gravity is above 0.966, the tables for Group O (Figure 2-5) are used to find the correction factor. For 300°F (149°C), the correction factor listed is 0.9187.

Therefore, V_{60} = 5,000 gallons x 0.9187 = 4,594 gallons or V_{60} = 19,000 liters x 0.9187 = 17,455 liters

The volume of the particular asphalt at 60°F (15°C) is therefore, 4,594 gallons (17,455 liters).

Figure 2-5
Multipliers For Correcting Asphalt Volumes To The Basis of 60°F / 15.6°C
(Tables Derived from ASTM D 4311)

(Group 0 - Specific Gravity at 60°F / 15.6°C above 0.966)

°F / °C	0	10	20	30	40	50	60	70	80	90
0 / -18	1.0211	1.0176	1.0141	1.0105	1.0070	1.0035	1.0000	0.9965	0.9930	0.9896
100 / 38	0.9861	0.9826	0.9792	0.9758	0.9723	0.9689	0.9655	0.9621	0.9587	0.9553
200 / 93	0.9520	0.9486	0.9452	0.9419	0.9385	0.9352	0.9319	0.9286	0.9253	0.9220
300 / 150	0.9187	0.9154	0.9122	0.9089	0.9057	0.9024	0.8992	0.8960	0.8928	0.8896
400 / 200	0.8864	0.8832	0.8800	0.8768	0.8737	0.8705	0.8674	0.8643	0.8611	0.8580

(Group 1 - Specific Gravity at 60°F / 15.6°C of 0.8 50 to 0. 966)

°F / °C	0	10	20	30	40	50	60	70	80	90
0 / -18	1.0241	1.0201	1.0160	1.0120	1.0080	1.0040	1.0000	0.9960	0.9921	0.9881
100 / 38	0.9842	0.9803	0.9763	0.9725	0.9686	0.9647	0.9609	0.9570	0.9532	0.9494
200 / 93	0.9456	0.9418	0.9380	0.9343	0.9305	0.9268	0.9231	0.9194	0.9157	0.9120
300 / 150	0.9083	0.9047	0.9010	0.8974	0.8938	0.8902	0.8866	0.8831	0.8795	0.8760
400 / 200	0.8724	0.8689	0.8654	0.8619	0.8585	0.8550	0.8516	0.8481	0.8447	0.8413

2.5 MINERAL AGGREGATES

2.5.1 Introduction

The amount of mineral aggregate in asphalt paving mixtures is generally 90 to 96 percent by weight and 75 to 85 percent by volume. Mineral aggregate is primarily responsible for the load supporting capacity of pavement. Asphalt pavement performance is also heavily influenced by aggregate characteristics and properties. Mineral aggregate has been defined as any hard, inert mineral material used for mixing in graduated particles or fragments. It includes sand, gravel, crushed stone, slag, rock dust or powder. Aggregates may also include recycled materials, such as reclaimed asphalt pavement (RAP) or reclaimed asphalt shingle material (RAS).

2.5.2 Sources of Aggregates

Aggregates for asphalt paving are generally classified according to their source or means of preparation. They include natural aggregate (pit or bank-run aggregates), processed aggregates (from quarries), synthetic or artificial aggregates (manufactured), and recycled aggregates. A listing of approved sources of aggregates may be obtained through the M&T Lab in Raleigh, N.C.

a. Natural Aggregates: Gravel and sand are natural aggregates and are typically pit or bank-run (river deposits) material. Exposed rocks are eroded and degraded by many processes of nature, both physical and chemical. The products of the degradation processes are usually moved by wind, water, or moving ice, and deposited as a soil material in various landforms.
b. Processed Aggregate: Processed aggregate includes both quarried aggregate and natural gravel or stone that has been crushed and screened to desired sizes. Natural gravel is usually crushed to make it more suitable for use in asphalt paving mixtures and to meet specification requirements for fractured faces.

The quality may be improved by crushing, which changes the surface texture of the particles, changes the rounded particle shapes to angular shapes, and improves the distribution and range of particle sizes.

c. Synthetic or Artificial Aggregates: Aggregates resulting from the modification of materials, which may involve both physical and chemical changes, are sometimes called synthetic or artificial aggregates. They may take the form of the by-product that is developed in the refining of ore, or those specially produced or processed from raw materials for ultimate use as aggregate.

d. Recycled Aggregates: These are salvaged aggregates obtained from the reclaiming of existing pavements (both asphalt and concrete), from waste shingle manufacturing material, or from other sources. Normally, recycled aggregate from pavements are obtained by milling an existing pavement or by breaking up the pavement and then processing the material through a crusher. Waste shingle material is obtained by processing manufacturing waste by grinding and screening to acceptable sizes.

2.5.3 Evaluating the Quality of Aggregates

(a) Aggregate Gradation

To specify aggregate gradation, the 0.45 power gradation chart is used with control limits to specify the mix gradation limits and to develop a *design aggregate structure*. A design aggregate structure must pass between the control points. The maximum density gradation is drawn from the 100 percent passing the maximum aggregate size through the origin. Maximum aggregate size is defined as one size larger than the nominal maximum aggregate size. Nominal maximum size is defined as one size larger that the first sieve size to retain more than 10 percent. The design aggregate structure approach ensures that the aggregate will develop a strong, stone skeleton to enhance resistance to permanent deformation while achieving sufficient void space (VMA) for mixture durability. Standard sizes of coarse and fine aggregate are shown in Table 1005-1 of the Standard Specifications (See Table 1005-1 at the end of this Section). Other requirements for aggregates for asphalt pavements can be found in Section 1012 of the Specifications.

Selecting an aggregate material for use in an asphalt pavement depends upon the availability, cost, and quality of the material, as well as the type of construction that is intended. Mineral aggregates play a key role in asphalt mix performance. Two types of aggregate properties are specified: source properties and consensus properties.

(b) Source Properties

Source properties are those which are often used to qualify local sources of aggregate. These tests must be completed prior to allowing the use of any particular aggregate in an asphalt mix. These properties are determined on the *individual components* rather than the aggregate blend. The source properties are:

(1) Toughness: Toughness is the percent loss of materials from an aggregate blend during the Los Angeles Abrasion test. The procedure is stated in AASHTO T 96, "Resistance to Abrasion of Small Size Coarse Aggregate by Use of the Los Angeles Machine." This test estimates the resistance of coarse aggregate to abrasion and mechanical degradation during handling, construction, and in-service performance.

(2) Soundness: Soundness is the percent loss of materials from an aggregate blend during the sodium sulfate soundness test. The procedure is stated in AASHTO T 104, "Soundness of Aggregate by Use of Sodium Sulfate or Magnesium Sulfate." This test estimates the resistance of aggregate to weathering while in-service. It can be performed on both coarse and fine aggregate.

(3) Deleterious Materials: Deleterious materials are defined as the weight percentage of contaminants such as shale, wood, mica, and coal in the blended aggregate. This property is measured by AASHTO T 112, "Clay Lumps and Friable Particles in Aggregates." It can be performed on coarse and fine aggregate.

(c) Consensus Properties

Once the aggregate sources have been selected and the source properties approved for use in asphalt mixes, an aggregate blend will be determined. The aggregate blend will consist of the percentages needed to meet the Job Mix Formula. Once the blend is determined, the following consensus properties will be analyzed to determine if the blend conforms to NCDOT requirements.

Consensus properties are those properties which are critical in achieving high performance asphalt pavement. These properties are determined on the *aggregate blend* rather than individual components. They are:

(1) Coarse Aggregate Angularity (Fractured Faces): This property ensures a high degree of aggregate internal friction and rutting resistance. It is defined as the percent by weight of aggregates larger than 4.75 mm with one or more fractured faces. Coarse aggregate angularity is to be determined in accordance with ASTM D 5821. The Specifications include the minimum requirements for coarse aggregate angularity for each mix type.

(2) Fine Aggregate Angularity: This property ensures a high degree of fine aggregate internal friction and rutting resistance. It is defined as the percent air voids present in loosely compacted aggregates smaller than 2.36 mm. Higher void contents mean more fractured faces. The test procedure used to measure this property is AASHTO T 304 (Method A). The Specifications include the minimum requirements for fine aggregate angularity (uncompacted void content) for each mix type.

(3) Flat and Elongated Particles: This characteristic is the percentage by weight of coarse aggregates that have a ratio of maximum to minimum dimension greater than a specified value. Elongated particles are undesirable because they have a tendency to break during construction and under traffic. The test procedure used is ASTM D 4791 (Section 8.4), "Flat and Elongated Particles in Coarse Aggregate" and it is performed on coarse aggregate larger than 4.75 mm sieve. The Specifications state that the maximum allowed Flat and Elongated Particles is 10% by weight at a 5:1 ratio for all mix types except S 4.75A, SF 9.5A, and S 9.5B.

(4) Clay Content (Sand Equivalent): Clay content is the percentage of clay material contained in the aggregate fraction that is finer than a 4.75 mm sieve. It is measured by AASHTO T 176, "Plastic Fines in Graded Aggregates and Soils by Use of the Sand Equivalent Test." The sand equivalent value is computed as a ratio of the sand to clay height readings expressed as a percentage. The Specifications include the minimum sand equivalent requirements for each mix type.

TABLE 1012-1
AGGREGATE CONSENSUS PROPERTIES[A]

Mix Type	Coarse Aggregate Angularity[B]	Fine Aggregate Angularity % Minimum	Sand Equivalent % Minimum	Flat and Elongated 5 : 1 Ratio % Maximum
Test Method	*ASTM D5821*	*AASHTO T 304*	*AASHTO T 176*	*ASTM D4791*
S4.75A; SF9.5A; S9.5B	75 / -	40	40	-
I19.0B; B25.0B	75 / -	40	40	10
S9.5C; S12.5C; I19.0C; B25.0C	95 / 90	45	45	10
S9.5D; S12.5D; I19.0D	100 / 100	45	50	10
OGAFC	100 / 100	45	45	10
UBWC	100 / 85	45	45	10

A. Requirements apply to the design aggregate blend.

B. 95 / 90 denotes that 95% of the coarse aggregate has one fractured face and 90% has 2 or more fractured faces.

TABLE 1005-1
AGGREGATE GRADATION - COARSE AGGREGATE

Percentage of Total by Weight Passing

Std. Size #	2"	1 1/2"	1"	3/4"	1/2"	3/8"	#4	#8	#10	#16	#40	#200	Remarks
4	100	90-100	20-55	0-15	-	0-5	-	-	-	-	-	**A**	Asphalt Plant Mix
467M	100	95-100	-	35-70	-	0-30	0-5	-	-	-	-	**A**	Asphalt Plant Mix
5	-	100	90-100	20-55	0-10	0-5	-	-	-	-	-	**A**	AST, Sediment Control Stone
57	-	100	95-100	-	25-60	-	0-10	0-5	-	-	-	**A**	AST, Str. Concrete, Shoulder Drain, Sediment Control Stone
57M	-	100	95-100	-	25-45	-	0-10	0-5	-	-	-	**A**	AST, Concrete Pavement
6M	-	-	100	90-100	20-55	0-20	0-8	-	-	-	-	**A**	AST
67	-	-	100	90-100	-	20-55	0-10	0-5	-	-	-	**A**	AST, Str. Concrete, Asphalt Plant Mix
78M	-	-	-	100	98-100	75-100	20-45	0-15	-	-	-	**A**	Asphalt Plant Mix, AST, Str. Conc, Weep Hole Drains
14M	-	-	-	-	-	100	35-70	5-20	-	0-8	-	**A**	Asphalt Plant Mix, AST, Weep Hole Drains, Str. Concrete
9	-	-	-	-	-	100	85-100	10-40	-	0-10	-	**A**	AST
ABC	-	100	75-97	-	55-80	-	35-55	-	25-45	-	14-30	4-12[B]	Aggregate Base Course, Aggregate Stabilization
ABC (M)	-	100	75-100	-	45-79	-	20-40	-	0- 25	-	-	0-12[B]	Maintenance Stabilization
Light-weight[C]	-	-	-	-	100	80-100	5- 40	0-20	-	0-10	-	0-2.5	AST

A. See Subarticle 1005-4(A).
B. See Subarticle 1005-4(B).
C. For Lightweight Aggregate used in Structural Concrete, see Subarticle 1014-2(E)(6).

Subarticle 1005-4

(A) When aggregates are used for Portland cement concrete, asphalt treatment, and asphalt plant mix, the requirements pertaining to material passing the No. 200 sieve are as follows:

(1) When tested during production, the amount of material passing the No. 200 sieve shall be no greater than 0.6%. When tested in a stockpile at the quarry site, the amount of material passing the No. 200 sieve shall be no greater than 1.0%.

(2) When tested at the job site before use, the amount of material passing the No. 200 sieve shall:
   (a) be no greater than 1.5% for aggregate used in Portland cement concrete or asphalt surface treatment.
   (b) be no greater than 2.0% for aggregate used in asphalt plant mix.

(3) If a stockpile at the job site is found to contain in excess of the specified amount of material passing the No. 200 sieve before use, the Engineer may approve its use provided:
   (a) For aggregate used in Portland cement concrete, the total percentage by weight passing the No. 200 sieve in the combined coarse and fine aggregate in the mix does not exceed 2.0%, and provided no increase in water-cement ratio is required by the use of this aggregate.
   (b) For aggregate used in asphalt plant mix, the total percentage by weight of minus No. 200 material in the plant mix being produced, as determined by the extraction test, can be maintained within the limits allowed by the job mix formula.

(B) For ABC and ABC(M), in addition to the gradation requirements, the material passing the No. 40 sieve shall not have a LL in excess of 30 nor a PI in excess of 6. For ABC used in asphalt plant mix, when tested during production, in a stockpile at the quarry site or at the job site before use, the amount of material passing the No. 200 sieve shall be from 0.0% to 12.0% by weight and the gradation requirements for material passing the No. 10 sieve (soil mortar) required in Section 1010 for ABC will not apply. For ABC not used in asphalt plant mix, the gradation requirements for material passing the No. 10 sieve (soil mortar) will be as required in Section 1010.

SECTION 3

ASPHALT PAVEMENT DESIGN

3.1 DESIGNING AN ASPHALT PAVEMENT STRUCTURE (THICKNESS)

Pavements constructed of asphalt mix are typically designed based on traffic projections over a 20 year period. Yet despite our best efforts, it is not uncommon to see severe rutting and cracking in asphalt pavements well before then as environmental conditions and heavy traffic loading take their toll. The result: rougher rides, higher user costs, higher pavement maintenance and rehabilitation costs, and more work zones for motorists to negotiate. In order to provide a pavement which will serve its intended purpose for a reasonable time at a reasonable costs, Engineers must utilize proper design procedures based on projected traffic over the design period and consider the environmental conditions, subgrade strength, material properties and other factors that will allow construction of a pavement that will perform satisfactorily. When designing and building a road for all-weather use by vehicles, the basic objectives are to:

(a) Have sufficient total thickness and internal strength to carry expected traffic loads.
(b) Prevent the penetration and/or internal accumulation of moisture, and
(c) Have a top surface that is smooth, skid resistant, and resistant to wear, distortion and deterioration by traffic, weather and deicing chemicals.

The subgrade ultimately carries all traffic loads; therefore, the structural function of a pavement is to support a wheel load on the pavement surface and transfer and spread that load to the subgrade, without over-taxing either the strength of the subgrade or the internal strength of the pavement itself. Figure 3-1 shows the wheel load being transmitted to the pavement surface through the tire. The pavement then spreads the wheel load to the subgrade which reduces the stress applied to the subgrade. Figure 3-2 shows how a wheel load, W, slightly deflects the pavement structure, causing both tensile and compressive stresses within the pavement. By proper selection of pavement materials and with adequate pavement thickness and strength, the stress at the bottom of the pavement will be small enough to be easily supported by the subgrade and the pavement will be able to resist the internal stresses caused by the loading.

Figure 3-1
Spread of Wheel-Load Through Pavement Structure

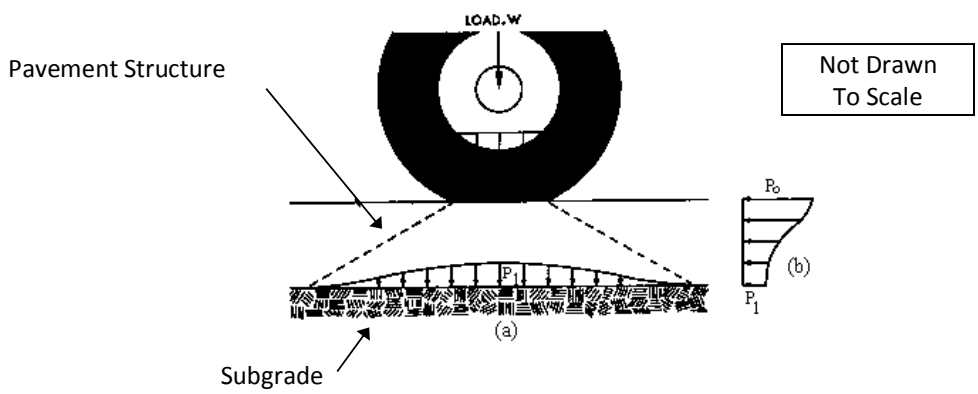

In determining pavement thickness, the following factors are considered:

(a) Traffic - The amount of traffic predicted to use the facility. The number of trucks predicted to use the highway is particularly important, as one pass of a tractor-trailer truck equals approximately 4,000 passenger vehicles;
(b) Soil Support Value - The soil subgrade strength, i.e., the type of soil of which the subgrade is composed - sand, clay, silt, etc.;
(c) Regional Factor - Accounts for the effect of various climatic conditions. For instance, the effect and number of freeze-thaw cycles in the mountain region will require a thicker pavement structure than the milder climate in the eastern part of the state;
(d) Strength and other influencing characteristics of the materials available or chosen or the layers or courses in the total asphalt pavement structure;
(e) Economics.

From these factors, a structural number is calculated. The structural number is an index number derived from an analysis of traffic, soil conditions, and regional factors. This number is used to determine the thickness of the total pavement and the thickness of the various layers. The following is a relative comparison of strength of various asphalt mix layers to each other and to other base types:

- 1 inch (25 mm) asphalt surface or intermediate layer ≅ 1½ inches (37.5 mm) asphalt base
- 1 inch (25 mm) asphalt surface or intermediate layer ≅ 3 inches (75 mm) aggregate base course
- 1 inch (25 mm) asphalt surface or intermediate layer ≅ 2 inches (50 mm) cement treated ABC

Obtaining the specified thickness of each pavement layer during construction is critical in order for the pavement to perform for the design life. As pavement thickness increases, small increases greatly extend the pavement life. For instance, one half inch (12.5 mm) less surface course potentially can reduce the pavement life from 20 years to 15 years. Therefore, the roadway technicians should be aware of the thickness required of each layer as specified by the plans and typical sections and the importance of obtaining that thickness in the completed pavement structure.

Figure 3-2
Pavement Deflection Results In Tensile and Compressive Stresses In Pavement Structure

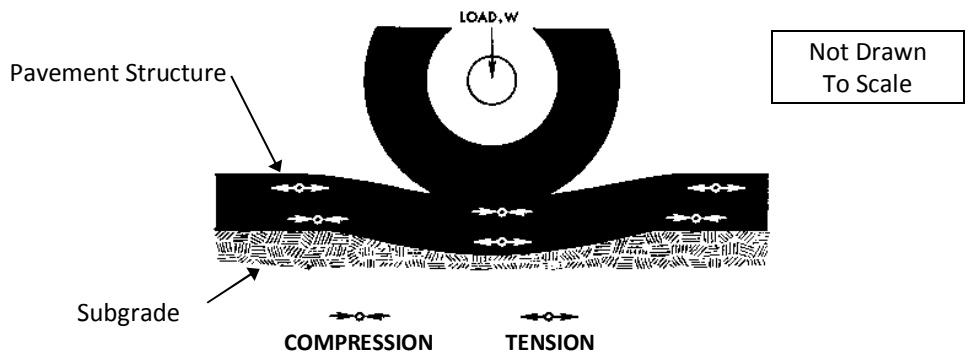

3.2 ASPHALT MIX TYPES

An asphalt pavement structure consists of all courses or layers above the prepared subgrade or foundation. The upper or top layer(s) is the asphalt surface course. The surface course(s) may range from less than an inch (25mm) to several inches (mm) in thickness. The surface course is a high density layer designed to prevent penetration or internal accumulation of moisture. It is also designed to be skid resistant, resistant to wear, distortion, and deterioration by traffic, weather and deicing chemicals and is made using a relatively small maximum size aggregate. The layer placed immediately below the surface course is the intermediate course. The intermediate course is a high density material and is made using a slightly larger maximum size aggregate. When the expected traffic is very high or other conditions dictate, an asphalt base course may be utilized. The base is also a high density material and is made using an even larger maximum size aggregate. The base is an important structural strength element of a pavement. Its main purpose is to distribute traffic wheel loads over the subgrade and, therefore, is almost entirely designed for that purpose. Base course mixes can be constructed in relatively thick layers at a reasonable cost due to the large aggregate size and therefore, require a lower asphalt binder content. The thickness of the base course is usually dependent upon the overall strength requirements for a particular pavement based upon the anticipated traffic loading.

Listed in the following table are the asphalt mix types. The first letter of the mix type designation indicates the type of mix (Surface, Intermediate and Base), the number indicates the nominal aggregate size in millimeters, and the letter at the end indicates the level of traffic loading which the mix is designed to carry with satisfactory performance. Traffic loading is expressed in Equivalent Single Axle Loads (ESALs). As an example, an S 12.5 C mix is a surface mix with a nominal maximum aggregate size of 12.5 mm and a design loading of 3 to 30 million ESALs and will be produced using a PG 70-22 asphalt binder.

Figure 3-3
ASPHALT MIX TYPES

Mix Type	General Use	ESAL Range (Million)	Binder PG Grade
SA-1	Surface Course	Less than 0.3	64-22
S 4.75A	Surface Course	Less than 1.0	64-22
SF 9.5A	Surface Course	Less than 0.3	64-22
S 9.5B	Surface Course	0.3 to 3	64-22
S 9.5C	Surface Course	3 to 30	70-22
S 9.5D	Surface Course	More than 30	76-22
S 12.5C	Surface Course	3 to 30	70-22
S 12.5D	Surface Course	More than 30	76-22
I 19.0B	Intermediate Course	Less than 3	64-22
I 19.0C	Intermediate Course	3 to 30	64-22
I 19.0D	Intermediate Course	More than 30	70-22
B 25.0B	Base Course	Less than 3	64-22
B 25.0C	Base Course	More than 3	64-22

3.3 PAVEMENT LAYER DEPTH GUIDELINES (FOR PAVEMENT DESIGN PURPOSES) (1)

Mix Type	Single Lift Depths (Minimum – Maximum) (2)	Maximum Layer Total Depths
SA-1	0.5 - 1.0 in	2.0 in
S 4.75A	0.5 - 1.0 in	2.0 in
SF 9.5A	1.0 - 1.5 in	3.0 in
S 9.5 X	1.5 - 2.0 in	3.0 in
S 12.5 X	2.0 - 2.0 in	4.0 in
I 19.0 X	2.5 - 4.0 in	4.0 in
B 25.0 X	3.0(3) - 5.5 in	No Restrictions

(1) From NCDOT Pavement Management Unit.
(2) Minimum layer thickness is at least 3 times the nominal maximum aggregate size.
(3) For B 25.0 X placed on unstabilized subgrade, minimum lift thickness is 4.0 in. (100 mm).

3.4 APPLICATION RATES OF SPREAD PER INCH DEPTH

Mix Type	Rate lbs/SY/Inch (1)		Single Layer Thickness/Rate (2)
SA-1	100		0.75 in @ 75 lbs/sy
S 4.75 A	100		0.75 in @ 85 lbs/sy
SF 9.5 A	110		1.25 in @ 138 lbs/sy
S 9.5 X	112		1.50 in @ 168 lbs/sy
S 12.5 X	112		2.00 in @ 224 lbs/sy
I 19.0 X	114		2.50 in @ 285 lbs/sy
B 25.0 X	114		3.00 in @ 342 lbs/sy

(1) Always refer to the contract and/or typical sections for the specified average rate and approximate depth.
(2) Approximate Minimum Thickness; lower rates may be used for leveling courses.

3.5 TYPICAL ASPHALT BINDER CONTENTS (BY WEIGHT OF TOTAL MIX)

PG 64-22		PG 70-22		PG 76-22	
SA-1	6.8%				
S 4.75 A	7.0%				
SF 9.5 A	6.7%	S 9.5 C	5.9%	S 9.5 D	5.7%
S 9.5 B	6.0%	S 12.5 C	5.6%	S 12.5 D	5.2%
I 19.0 B & C	4.8%	I 19.0 D	4.5%		
B 25.0 B & C	4.5%				
OGAFC, Type FC-1	6.1%			OGAFC, Type FC-1 Mod.	6.1%
PADC, Type P-57	2.5%				
PADC, Type P-78M	3.0%			OGAFC, Type FC-2 Mod.	6.1%

Example Roadway Typical Section

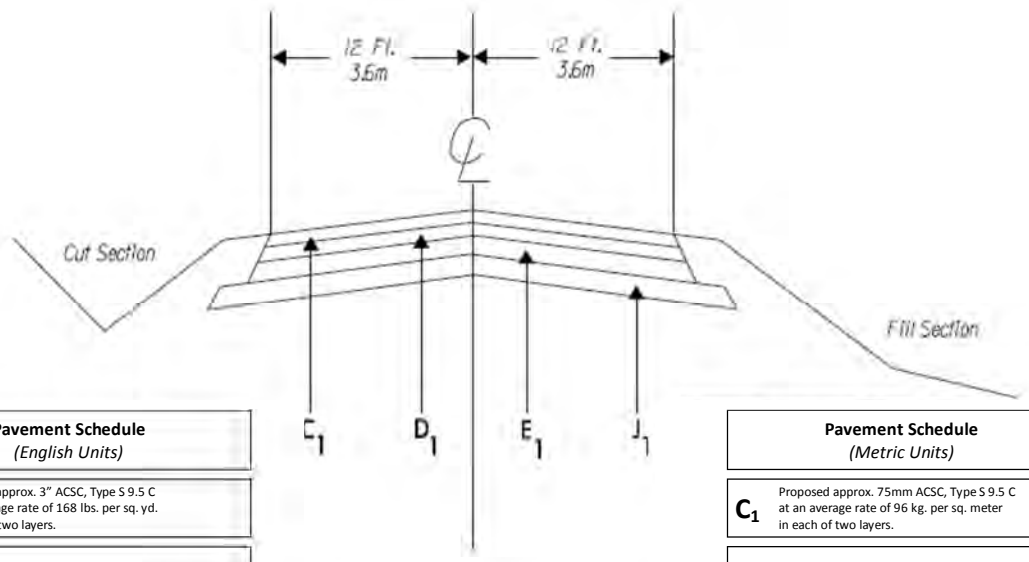

Pavement Schedule
(English Units)

C_1	Proposed approx. 3" ACSC, Type S 9.5 C at an average rate of 168 lbs. per sq. yd. in each of two layers.
D_1	Proposed approx. 2 1/2" ACIC, Type I 19.0 C at an average rate of 285 lbs. per sq. yd.
E_1	Proposed approx. 5" ACBC, Type B 25.0 C at an average rate of 570 lbs. per sq. yd.
J_1	Proposed 8" Aggregate Base Course

Note: Rates and depths shown are examples only. See specific project Pavement Schedule for exact rates and depths.

Pavement Schedule
(Metric Units)

C_1	Proposed approx. 75mm ACSC, Type S 9.5 C at an average rate of 96 kg. per sq. meter in each of two layers.
D_1	Proposed approx. 60mm ACIC, Type I 19.0 C at an average rate of 160 kg. per sq. meter
E_1	Proposed approx. 125mm ACBC, Type B 25.0 C at an average rate of 300 kg. per sq. meter
J_1	Proposed 200mm Aggregate Base Course

SECTION 4

ASPHALT MIX DESIGN AND JOB MIX FORMULAS

4.1 INTRODUCTION TO MIX DESIGN

As stated in Section 2, an asphalt mixture is composed of three basic components: 1) asphalt binder, 2) aggregates and 3) air voids. Mineral filler, additives, and other modifiers are used when needed or required. The asphalt material, which can be asphalt binder, modified asphalt binder, emulsified liquid asphalt or some other form of asphaltic material, acts as a binding agent to glue the aggregate particles into a cohesive mass. Asphalt Concrete is a paving material that consist primarily of asphalt binder and mineral aggregate and is mixed in an asphalt mix plant or by some other procedure. When bound by the asphalt binder, the mineral aggregate acts as a stone framework to impart strength and toughness to the system. Because it is relatively impervious to water, the asphalt binder also functions to waterproof the mixture. Because asphalt mix contains both asphalt binder and mineral aggregate, the volumetric properties and subsequently the behavior of the mixture is affected by the properties of the individual components and how they react with each other in the system. In order to determine if the behavior and performance of the mixture under traffic will be satisfactory, a mix design must be performed to determine the proper combination of the individual materials prior to beginning mix production.

4.2 PURPOSES OF MIX DESIGNS

While there are many types of asphalt mixtures used in highway construction, there are three basic types: surface mixes, intermediate mixes and base mixes. The specifications for asphalt plant mixes cover each type in more detail than we are here, but it is well to note that each type has a specific purpose and location within an asphalt pavement structure.

As noted above, there are certain properties and performance characteristics that are desirable in an asphalt mix. The relative proportions of aggregate, asphalt binder, and air voids significantly affect the physical properties of the mix and ultimately, how it will perform as a finished pavement. While it would be very easy to "mix some asphalt with some rock", this very likely would result in a poor quality mix. Designing asphalt mixes, as with other engineering materials designs, is largely a matter of selecting and proportioning materials to obtain the desired qualities and properties in the finished construction. The overall objective is to determine an economical blend and gradation of aggregates (within the specification limits) and a corresponding asphalt content that yields a mix having:

(a) Sufficient asphalt to ensure a durable pavement by thoroughly coating the aggregate particles and waterproofing and bonding them together under suitable compaction.
(b) Sufficient mix resistance to permanent deformation to satisfy the service requirement and demands of traffic without distortion or displacement.
(c) Sufficient voids in the total compacted mix to provide for a slight additional amount of compaction under traffic loading without bleeding and rutting, yet be low enough to keep out excessive air and moisture.
(d) Sufficient workability to permit efficient placement and proper compaction operations without segregation.

4.3 PERFORMANCE CHARACTERISTICS CONSIDERED IN MIX DESIGN

Asphalt pavements function properly when they are designed, produced and placed in such a manner as to give them certain desirable performance characteristics. These characteristics contribute to the quality of asphalt pavements. These include permanent deformation (rutting) resistance, durability, flexibility, fatigue resistance, skid resistance, impermeability, workability and economics.

Ensuring that a paving mixture has each of these properties is a major goal of the mix-design procedure. Therefore, the technician should be aware of what each of the properties is, how it is evaluated, and what it means in terms of pavement performance. These properties are discussed below.

4.3.1 Permanent Deformation (Rut Resistance)

The ability of an asphalt mix to resist permanent deformation from imposed loads. Unstable mixes are marked by channeling (ruts), corrugations (washboarding), pushing and shoving in the pavement. Rut resistance is dependent upon both internal friction of aggregate and cohesion within the mix.

Internal friction is dependent on particle shape, surface texture, gradation of aggregate, density of mix, binder grade and quantity of asphalt. Rut resistance results from a combination of the frictional forces within the aggregate

structure and the interlocking resistance of the aggregate in the mix. Frictional resistance increases with the surface roughness of the aggregate particles and with the area of particle contact. Interlocking resistance is dependent upon particle size and shape.

Figure 4-1
Contrasting Aggregate Structures

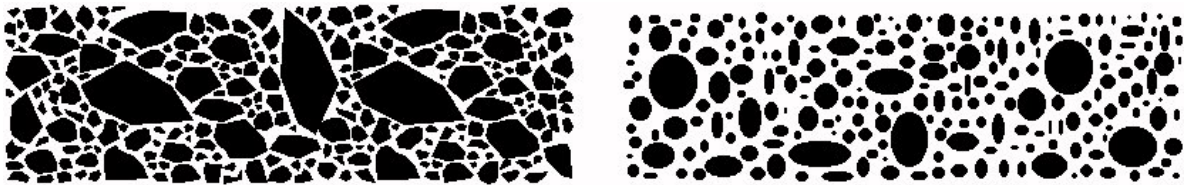

Cubical Aggregate **Rounded Aggregate**

The figure above demonstrates that with more angular (cubical) particle shape and more contact between particles greater resistance to rutting and permanent deformation is achieved. For any given aggregate, the rut resistance increases with the density of the confined particles, which is achieved by dense gradations and adequate compaction. Excessive asphalt in the mix tends to lubricate the aggregate particles and lower the internal friction of the stone framework.

Cohesion is that binding force that is inherent in the asphalt mixes. The asphalt serves to maintain contact pressures developed between aggregate particles. Cohesion varies directly with the rate of loading, loaded area, and viscosity of the asphalt. It varies inversely with the temperature. Cohesion increases with increasing asphalt content up to a maximum point and then decreases.

4.3.2 Durability

Durability is how well an asphalt mix resists disintegration by weathering and traffic. Included under weathering are changes in the characteristics of asphalt such as oxidation, volatilization and changes in the pavement and aggregate due to the action of water, including stripping, freezing and thawing. Durability is generally enhanced by high asphalt contents, dense aggregate gradations, and well-compacted, impervious mixes. One argument for an increased amount of asphalt is the resultant thicker asphalt film coating around the aggregate particles. Thicker films are more resistant to age-hardening. Another reason for an increased amount of asphalt is to reduce the pore size of the interconnected voids or to seal them off in the mix, making it more difficult for air and water to enter the interior of the mix and cause damage. To resist the action of water, the same requirements (dense-graded aggregates, high asphalt contents, and adequate compaction) apply. It is desirable to use aggregates that retain an asphalt coating in the presence of water.

Sufficient asphalt must be incorporated in the mix to provide bonding properties adequate to resist the abrasive forces of traffic. Insufficient asphalt may result in aggregate being dislodged from the surface. This is known as raveling. Abrasion may also take place if the asphalt has become brittle. Overheating of asphalt in the mixing process is a cause of brittleness, which leads to pavement disintegration. A mix having a high asphalt content with voids completely filled with asphalt would provide the ultimate in durability. However, this would be undesirable from the standpoint of rut resistance. When placed in the roadway, the mix would rut and displace under traffic. Bleeding or flushing of asphalt to the surface would also take place, thereby reducing skid resistance. Maximum rut resistance is not reached in an aggregate mass until the amount of asphalt coating the particles has reached some critical value. Additional asphalt then tends to act as a lubricant rather than a binder, reducing rut resistance of the mix, even though durability may be increased. It is necessary to compromise by keeping the asphalt content as high as possible while maintaining adequate rut resistance.

4.3.3 Flexibility

This is the ability of an asphalt mix to conform to gradual settlements and movements of the base and subgrade. Differential settlements in the fill embankment occasionally occur. Thus, it is impossible to develop uniform density in the subgrade during construction because sections or portions of the pavement tend to compress and settle under traffic. Therefore, the asphalt pavement must have the ability to conform to localized and differential settlement without cracking. Generally, flexibility of the asphalt mix is enhanced by high asphalt content and relatively open-graded aggregates.

4.3.4 Fatigue (Cracking) Resistance

The ability of asphalt pavement to withstand repeated flexing of the pavement structure caused by the passage of wheel loads. Tests have shown that the quantity of asphalt is extremely important when considering the fatigue

resistance of a pavement. As a rule, the higher the asphalt content, the greater the fatigue resistance. Tests indicate that low air-void content asphalt mixes have more fatigue resistance than higher air-void content mixes. Well-graded aggregates that permit higher asphalt content without causing flushing or bleeding in compacted pavement should be incorporated in the mix.

4.3.5 Skid Resistance

The ability of an asphalt surface, particularly when wet, to provide resistance to slipping or skidding of vehicles. The factors for obtaining high skid resistance are generally the same as those for obtaining high stability. Proper asphalt contents and aggregates with a rough surface texture are the greatest contributors. However, not only must the aggregate have a rough surface texture, it must also resist polishing. Aggregates containing non-polishing minerals with different wear or abrasion characteristics provide continuous renewal of the pavement's texture, maintaining a skid-resistant surface. Examples of non-polishing aggregates are granites, crushed gravel, silica sands and slag. An example of a polishing type aggregate is limestone. Mixes so rich in asphalt as to fill the voids in the compacted pavement will probably cause asphalt to flush to the surface, which is called bleeding. Asphalt on pavement surface can cause slippery conditions.

4.3.6 Impermeability

The ability an asphalt pavement to provide resistance to the passage of air and water into or through the pavement. While the void content may be an indication of the susceptibility of a compacted mix to the passage of air and water; of more significance is the interconnection of voids and their access to the surface. Imperviousness to air and water is extremely important from the standpoint of lasting durability.

4.3.7 Low Temperature / Shrinkage Cracking

The ability of an asphalt pavement to resist low temperature/shrinkage cracking. Low temperature/shrinkage cracking is caused by adverse environmental conditions rather than applied traffic loads. It is characterized by surprisingly consistently spaced transverse cracks (perpendicular to the direction of traffic). It is caused by a build-up of tensile stresses as the pavement shrinks due to extremely cold weather or due to shrinkage caused by oxidation (aging) of the pavement. Hard asphalt binders or binders which have hardened (oxidized) due to high void content in the as constructed mix are more prone to low temperature cracking.

4.3.8 Workability

The ease with which an asphalt mix may be placed and compacted. With careful attention to proper design and with the use of machine spreading, workability is not a problem. At times, the properties of the aggregates that promote high rut resistance make asphalt mixes containing these aggregates difficult to spread or compact and may promote segregation. Since workability problems are discovered most frequently during the paving operation, mix design adjustments should be made quickly to allow the job to proceed as efficiently as possible.

4.3.9 Economics

The cost of the in-place pavement must be considered. Mix components, production and placement costs, haul distances, safety considerations, quality, expected pavement performance and other factors need to be evaluated when selecting the final mix design.

4.4 THE MIX DESIGN PROCESS

The mix design process is based on volumetric proportioning of the asphalt and aggregate materials and laboratory compaction of trial mixes using the Superpave Gyratory Compactor (SGC). The basic mixture design procedures consist of an evaluation of the following characteristics once the type and amount of traffic and the environmental conditions under which the pavement will be expected to perform have been determined:

4.4.1 Aggregate Properties and Gradation Requirements

Aggregate physical properties for asphalt mixes are specified on the basis of both “consensus” (blend) properties and “source” (individual) properties. These criteria are discussed in more detail in Section 2.

To specify gradation, the 0.45-power gradation chart is used with control points on various sieves to define a permissible gradation of the designated mix type. Control points function as master ranges through which gradations must pass. Control points are placed at the nominal maximum size sieve, an intermediate size sieve (2.36 mm), and the

smallest sieve (0.075 mm). The control points vary, depending on the nominal maximum size of the mix. This chart uses a unique graphing technique to judge the cumulative particle size distribution of an aggregates blend. The vertical axis of the chart is the percent passing. The horizontal axis is an arithmetic scale of sieve sizes in millimeters, raised to the 0.45 power (See Example 0.45-power chart included in the example mix design later in this section of the manual).

An important feature of the 0.45-power chart is the maximum density gradation. This gradation plots as a straight line from the maximum aggregate size through the origin and uses the following definitions with respect to aggregate size:

Maximum Size: One sieve size larger than the nominal maximum size.

Nominal Maximum Size: One sieve size larger than the first sieve to retain more than 10 %

(Mix types are defined in terms of their nominal maximum aggregate size;
for example, an I 19.0C mix has a nominal maximum aggregate size of 19.0 mm.)

The maximum density gradation represents a gradation in which the aggregate particles fit together in their most dense possible arrangement. In general, this is a gradation to avoid because there will most likely be inadequate void space within the aggregate structure to allow adding adequate asphalt binder in order to develop sufficiently thick asphalt films for a durable mixture and still maintain the desired air void content. The design gradation should lie between the control points and meet the aggregate gradation requirements detailed in Table 610-1.

4.4.2 Asphalt Binder Grade Selection and Requirements

The binder grade selection process utilizes procedures that directly relate laboratory analysis with laboratory performance. In general, mix design guidelines specify that the binder grade to be used in a mix be initially selected based on the climate (average high and average low temperatures), in which the pavement will be performing. The guidelines then recommend the high temperature grade be adjusted (upward) based on other factors, such as the amount and type of traffic loading, operating speed of the traffic, and position of the pavement layer within the pavement structure. The designation, called **P**erformance **G**rading (**PG**) contains two temperatures: the average 7 day high pavement temperature and the average 7 day low temperature. The high temperature is important because rutting failure occurs when the pavement is hot and becomes soft. Two other effects that increase rutting potential are very high traffic or very slow traffic. These factors increase the likelihood of rutting, and by raising the specified high temperature of the binder, the rut resistance will increase. The low temperature number indicates the low temperature cracking properties of the binder. The lower the second number, the greater the ability the binder has to resist cracking due to shrinkage caused by freeze/thaw cycles. These guidelines have been taken into consideration when specifying the binder grades to be used in the various mixes used in North Carolina. See Table 610-3 for the PG grade required for the various mix types specified by NCDOT.

PG 64-22 was selected as the "standard" grade for North Carolina based on climatic conditions.

4.4.3 Mixture Volumetric Properties and Requirements

A major factor that must be taken into account when considering asphalt mixture behavior is the volumetric properties of the mixture. Mixture volumetric requirements consist of air voids (VTM), voids in the mineral aggregate (VMA), voids filled with asphalt (VFA) and effective asphalt content (P_{be}). These volumetric properties for NCDOT mixes are illustrated in Figure 4-2.

Air void content (VTM) is an extremely important property because it is used as the basis for selecting the asphalt binder content. The design air void content is usually 4.0 %; however, the mix designer should always check the specifications.

Voids in the mineral aggregate (VMA) is defined as the sum of the volume of air voids and effective (i.e., unabsorbed) binder in a compacted sample. It represents the void space between the aggregate particles. Specified minimum values for VMA at the design air void content of 4.0 % are a function of nominal maximum aggregate size. Table 610-3 shows mix VMA requirements.

Voids filled with asphalt (VFA) is defined as the percentage of the VMA containing asphalt binder. Consequently, VFA is the volume of effective asphalt binder expressed as a percentage of the VMA. The acceptable range of design VFA at 4.0 % air voids is a function of traffic level as shown in Table 610-3. Effective asphalt content (P_{be}) is defined as the total asphalt content of a paving mixture minus the portion of asphalt absorbed into the aggregate particles (see Fig. 4-3).

Obtaining the correct air void content is critical in both mix design and the in-service performance of a pavement. As discussed in Section 2, asphalt binder expands and contracts with variations in–temperature. In hot weather, air voids in the mix provide room for the expanding asphalt binder. If there are not enough voids within the mix

to allow for the expansion, the asphalt binder expands to fill all existing voids, and then begins pushing the aggregate particles apart, reducing aggregate interlock and contact friction. This causes the pavement to become unstable, more susceptible to pushing, shoving, and rutting. The binder eventually may bleed or flush to the surface. This significantly reduces the skid resistance of the pavement.

Imperviousness to air and water is extremely important for the mix to be and remain durable. If the air void content is too high, the air voids may interconnect and allow water and air to penetrate into the mix. Water penetration may cause the asphalt binder to strip from the aggregate. Exposing asphalt binder to both water and air will cause it to oxidize more rapidly, causing it to become hard and brittle, and therefore resulting in early fatigue failure.

4.4.4 Dust to Effective Binder Ratio

Another mixture requirement is the dust to effective binder ratio. This is computed as the ratio of the percentage by weight of aggregate finer than the 0.075 mm sieve (by washing) to the effective asphalt content expressed as a percent by weight of total mix. Effective binder content is the total binder used in the mixture less the percentage of absorbed binder. Dust / Binder Ratio is used during the mixture design phase as a design criteria. Specifications require the dust / effective binder ratio to be in the range of 0.6 to 1.4, inclusive, for all NCDOT asphalt mixtures.

4.4.5 Moisture Susceptibility

Moisture Susceptibility, also known as *stripping,* is the separation of the asphalt film from the aggregate through the action of water and may make an aggregate material unsuitable for use in asphalt paving mixes. Such material is referred to as hydrophilic (water loving). Siliceous aggregates such as quartzite and some granites are examples of aggregates that may require evaluation of stripping potential. Aggregates that exhibit a high degree of resistance to asphalt film stripping in the presence of water are usually most suitable in asphalt paving mixes. Such aggregates are referred to as hydrophobic (water hating) aggregates. Limestone, dolomite, and traprock are usually highly resistant to asphalt film stripping. Why hydrophobic or hydrophilic aggregates behave as they do is not completely understood. The explanation is not as important as the ability to detect the properties and avoid use of aggregates conductive to asphalt stripping.

The moisture susceptibility test used to evaluate asphalt mix for stripping is NCDOT-T-283. This test serves two purposes. First, it identifies whether a combination of asphalt binder and aggregate is moisture susceptible. Second, it measures the effectiveness of anti-stripping additives.

4.4.6 Permanent Deformation (Rut Resistance)

One of the major objectives of mix design is to provide pavements which would be highly resistant to permanent deformation (rut resistance). As stated earlier, rut resistance is the ability of an asphalt mix to resist permanent deformation from imposed loads. This is especially important for surface mixes since this is where the wheel loads are concentrated and the potential for rutting is greatest. The aggregate and binder specifications are established such that a rut resistant mix should be obtained; however, once a mix has been designed based on the specified criteria, the mix should be physically tested to evaluate the anticipated performance under traffic. To accomplish this objective the Department will perform rut resistance evaluation on surface mix specimens prepared by the Contractor as a part of the mix design process.

In addition to the required mix design submittal forms, the Contractor will prepare and deliver six (6) Gyratory Compactor specimens to the Department's Central Asphalt Laboratory for the following surface mix types: S4.75A, SF9.5A, S9.5B, S9.5C, S9.5D, S12.5C and S12.5D. The Contractor will prepare these specimens using lab produced mix in accordance with NCDOT-T-312. These specimens shall be compacted to a height of 75 ± 2 mm and to a void content (VTM) of 4.0% ± 0.5% **(except, S4.75A rut specimens should be compacted to a VTM of 5.0% ± 0.5%)**. These specimens will be tested for rutting susceptibility using the Asphalt Pavement Analyzer in the Materials and Tests Central facility. The maximum rut depth allowed for the various surface mixes is specified in Table 610-3.

MIXTURE VOLUMETRIC PROPERTIES AND RELATIONSHIPS

Figure 4-2
Illustration of VMA in a Compacted Mix Specimen

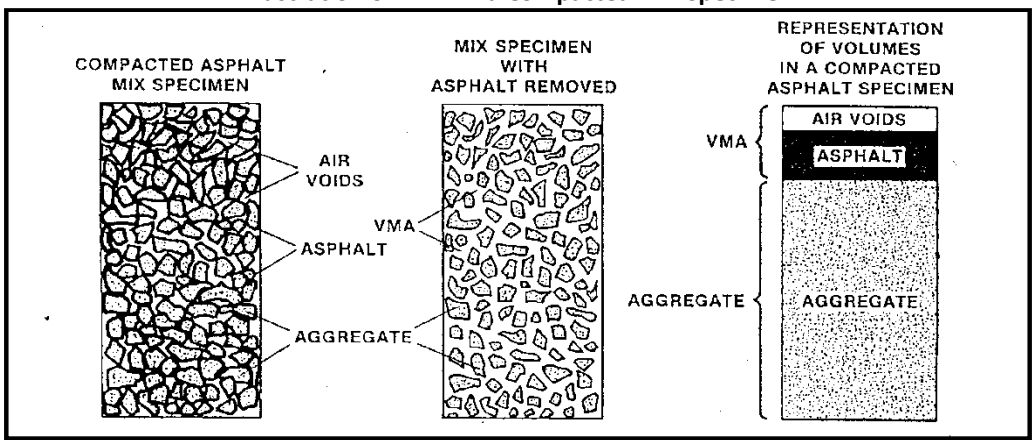

(Note: For simplification the volume of absorbed asphalt is not shown.)

Figure 4-3
Diagram Illustrating the Air Voids and Voids in Mineral Aggregate (VMA)

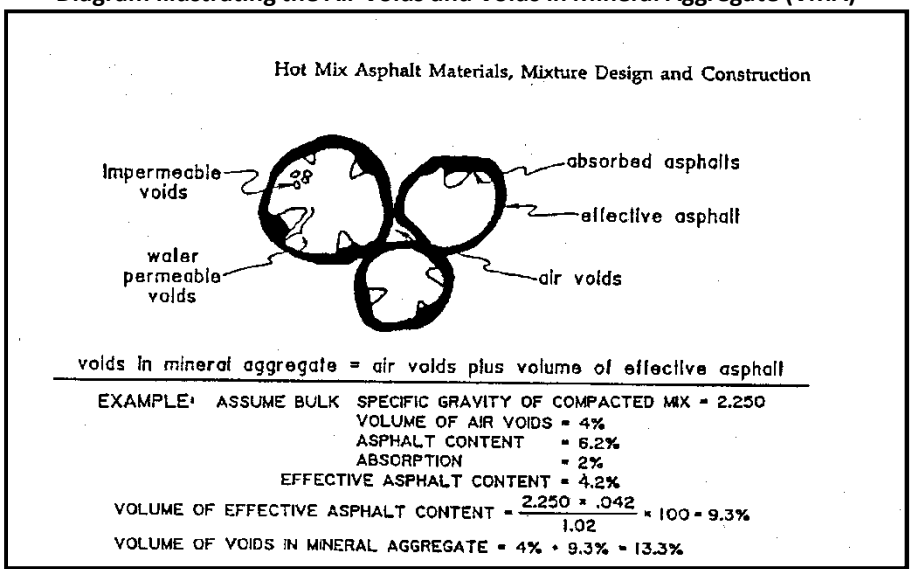

4.5 NCDOT MIX DESIGN PROCEDURES

The Contractor is required to design the asphalt mix and to obtain an approved Job Mix Formula (JMF) issued by the Department. A mix design and proposed JMF targets for each required mix type and combination of aggregates must be submitted both in writing and in electronic format to the NCDOT Asphalt Design Engineer for review and approval at least 10 days prior to start of asphalt mix production.

The mix design must be prepared in an approved mix design laboratory by a certified Mix Design Technician. The design laboratory must be approved by the Asphalt Design Engineer prior to submission of the mix design. The mix design shall be prepared in accordance with AASHTO R 35, "Superpave Volumetric Design for Asphalt Mixtures" as modified by the Department, recommended procedures in the Asphalt Institute publication "Superpave Series No. 2 (SP-2, 3rd edition) Mix Design Manual" and the latest edition of Department mix design computer programs, policies, procedures, and forms. The request for the AMD/JMF approval will be submitted to the Mix Design Engineer on Form QMS-1 (see Page 4-19) with attached design data, proposed JMF target values, and forms as noted. In addition, the Contractor is required to submit the design data in electronic form using the Department's mix design program.

Prepare all proposed mix design data in accordance with Department policies and procedures including but not limited to, the following information:

(1) Source and percentage of each aggregate component to be used in the design aggregate blend gradation, including RAP and RAS.
(2) Percentage of asphalt binder in RAP and RAS.
(3) Gradation of each aggregates component, including RAP and RAS.
(4) The following aggregate properties: current bulk specific gravity (G_{sb}), current apparent specific gravity (G_{sa}) and absorption of the individual aggregate components to be used when tested in accordance with AASHTO T84 and T85, except report the effective bulk specific gravity (G_{se}) of RAP and RAS aggregate as determined by NCDOT-T- 209. Report coarse aggregate angularity, fine aggregate angularity, flat and elongated percentages, and sand equivalent for the total aggregate blend.
(5) Source(s), modification method, and percent of modifier by weight of asphalt binder, if modified.
(6) Supplier, source, grade, and equi-viscous mixing and compaction temperatures of the asphalt binder. Determine equi-viscous temperatures using the rotational viscometer in accordance with ASTM D4402 corresponding to the following recommended viscosity ranges:

Range for mixing = 0.150 to 0.190 Pa-s
Range for compaction = 0.250 to 0.310 Pa-s

When PG 76-22 or other modified binders are used, base the temperatures on the documented supplier's recommendations.
(7) Brand name, manufacturer, shipping point, and percentage of anti-strip additive used in the mix design. Determine TSR data in accordance with NCDOT-T-283.
(8) Target value for percent passing each standard sieve for the design aggregate gradation. Data will show the percent passing for all standard sieves listed in Table 610-1 for the specified mix type. Show the percentages in units of one percent of aggregate passing, except for the 0.075 mm (No. 200) sieve, show in units to one-tenth of one percent. Base percentages on the dry weight of aggregate determined in accordance with NCDOT-T-11 and NCDOT-T-27.
(9) Volumetric properties of the compacted mixture calculated on the basis of the mixture's maximum specific gravity as determined by NCDOT-T-209. The mixture shall be aged in accordance with AASHTO R 30 and the bulk specific gravity of specimens determined by NCDOT-T-166 or NCDOT-T-331, for each asphalt content tested. Determine and report properties in accordance with the requirements of AASHTO R 35 except as modified herein, and Department Mix Design Policies and Procedures.
(10) Graphical plots of percent asphalt binder by total weight of mix (P_b) versus the following properties at the design number of gyrations, N_{des}, specified:

(a) SGC bulk gravity, G_{mb} @ N_{des}
(b) % G_{mm} @ N_{ini}
(c) Voids in total Mix (VTM)
(d) Voids Filled With Asphalt (VFA)
(e) Voids in Mineral Aggregate (VMA)
(f) % Compaction vs. Log of Gyrations

(11) Graphical plot of the design aggregate gradation (design blend) on FHWA 0.45 power chart showing the applicable control points, and maximum density line. Plot all standard sieves for the applicable mix type.
(12) Proposed target value of asphalt binder content by weight of total mix and specification design properties at that percentage.
(13) TSR test data in accordance with NCDOT-T-283.

When the mix design is submitted, include the original recording charts detailing the TSR results to the Asphalt Design Engineer in accordance with Section 7.14. In addition, when requested by the Asphalt Design Engineer, the Contractor must submit representative samples of each mix component, including RAP, RAS, mineral filler, asphalt binder, chemical anti-strip additive and hydrated lime to the Department's mix design laboratory.

In addition, the Contractor will prepare and deliver six (6) Gyratory Compactor specimens to the Department's Central Asphalt Laboratory for the following surface mix types: S4.75A, SF9.5A, S 9.5B, S 9.5C, S 9.5D, S 12.5C and S 12.5D. These specimens are used for rut testing.

4.6 THE JOB MIX FORMULA

NCDOT Specifications require that all asphalt plant mixes, either virgin or recycled, be proportioned and graded such that they meet the requirements of a job mix formula approved and issued by the Department. This job mix formula will be based on a mix design performed by the Contractor and approved by the Materials and Tests Asphalt Lab. Once the Asphalt Design Engineer has evaluated and/or confirmed the data, the mix design will be approved if it meets specifications. The mix design and job mix formula target values must be within the design criteria for the particular type of asphalt mixture specified. The source and grades of material, blend proportions of each of the various aggregates used, specific gravity information, and other applicable data and notes will be given on the formula. Specific details on "Master" job mix formula procedures are discussed below.

Once the JMF has been approved and production is ready to begin, the component materials must be combined in such proportions that the completed mixture meets the specification requirements for the particular mix type specified. During production the materials are heated and blended together in an asphalt mix plant such that the mixture is uniformly mixed and coated with asphalt binder. The mixture is then transported to the roadway where it is spread, finished and compacted to the required grades, thickness and typical section required by the plans and contract.

The job mix formula (JMF) gradation target values will be established within the design criteria specified for the particular type of asphalt mixture to be produced. The JMF asphalt binder content will be established at the percentage which will produce voids in total mix (VTM) at the midpoint of the specification design range for VTM, unless otherwise approved. The formula for each mixture will establish the following: blend percentage of each aggregate fraction, the percentage of reclaimed aggregate, if applicable, a single percentage of combined aggregate passing each required sieve size, the total percentage (by weight of total mixture) and grade of asphalt binder required by the specifications for that mix type as in Table 610-3 unless otherwise approved by the Engineer, the percentage and grade of asphalt binder actually to be added to the mixture (for recycled mixtures), the percentage of chemical anti-strip additive to be added to the asphalt binder or percentage of hydrated lime to be added to the aggregate, the temperature at which the mixture is to be discharged from the plant, the required field density, and other volumetric properties.

The mixing temperature during production at the asphalt plant will be established on the job mix formula. The mixing temperature is based on the grade of asphalt binder required by the specifications for a specific mix type as in Table 610-3, unless otherwise approved by the Engineer. The mixing temperatures will be different depending on which grade of asphalt binder is being used.

At the end of this section are examples of the currently approved computer generated mix design forms and supporting mix design data forms for the Contractor's use in preparing and submitting Mix Design/JMF request. The Contractor is required to use and therefore, must obtain from the Department, at no charge, the Mix Design computer spreadsheet program that will perform the calculations and generate the completed forms once the appropriate data has been entered. To obtain a copy of this spreadsheet, contact the Asphalt Design Engineer at (919) 329-4060.

TABLE 610-2
SUPERPAVE AGGREGATE GRADATION CRITERIA
(Percent Passing Control Points)

Standard Sieves (mm)	Mix Type (Nominal Max. Aggregate Size)									
	4.75 mm		9.5 mm[A]		12.5 mm[A]		19.0 mm		25.0 mm	
	Min	*Max*	*Min*	*Max*	*Min*	*Max*	*Min*	*Max*	*Min*	*Max*
50.0	-	-	-	-	-	-	-	-	-	-
37.5	-	-	-	-	-	-	-	-	100	-
25.0	-	-	-	-	-	-	100	-	90.0	100
19.0	-	-	-	-	100	-	90.0	100	-	90.0
12.5	*100.0*	-	100	-	90.0	100	-	90.0	-	-
9.50	*95.0*	*100.0*	90.0	100	-	90.0	-	-	-	-
4.75	*90.0*	*100.0*	-	90.0	-	-	-	-	-	-
2.36	-	-	32.0[B]	67.0[B]	28.0	58.0	23.0	49.0	19.0	45.0
1.18	*30.0*	*60.0*	-	-	-	-	-	-	-	-
0.075	*6.0*	*12.0*	4.0	8.0	4.0	8.0	3.0	8.0	3.0	7.0

A. For the final surface layer of the specified mix type, use a mix design with an aggregate blend gradation above the maximum density line on the 2.36 mm and larger sieves.

B. For Type SF9.5A, the percent passing the 2.36 mm sieve shall be a minimum of 60% and a maximum of 70%.

TABLE 610-3 SUPERPAVE MIX DESIGN CRITERIA									
Mix Type	Design ESALs[A] millions	Binder PG Grade[B]	Compaction Levels G_{mm} @		Max. Rut Depth (mm)	Volumetric Properties			
			N_{ini}	N_{des}		VMA % Min.	VTM %	VFA Min.-Max.	$\%G_{mm}$ @ N_{ini}
S4.75A	< 1	64-22	6	50	11.5	16.0	4.0 - 6.0	65 - 80	≤ 91.5
SF9.5A	< 0.3	64 - 22	6	50	11.5	16.0	3.0 - 5.0	70 - 80	≤ 91.5
S9.5B	0.3 - 3	64 - 22	7	65	9.5	15.5	3.0 - 5.0	65 - 80	≤ 90.5
S9.5C	3 - 30	70 - 22	7	75	6.5	15.5	3.0 - 5.0	65 - 78	≤ 90.5
S9.5D	> 30	76 - 22	8	100	4.5	15.5	3.0 - 5.0	65 - 78	≤ 90.0
S12.5C	3 - 30	70 - 22	7	75	6.5	14.5	3.0 - 5.0	65 - 78	≤ 90.5
S12.5D	> 30	76 - 22	8	100	4.5	14.5	3.0 - 5.0	65 - 78	≤ 90.0
I19.0B	< 3	64 - 22	7	65	-	13.5	3.0 - 5.0	65 - 78	≤ 90.5
I19.0C	3 - 30	64 - 22	7	75	-	13.5	3.0 - 5.0	65 - 78	≤ 90.0
I19.0D	> 30	70 - 22	8	100	-	13.5	3.0 - 5.0	65 - 78	≤ 90.0
B25.0B	< 3	64 - 22	7	65	-	12.5	3.0 - 5.0	65 - 78	≤ 90.5
B25.0C	> 3	64 - 22	7	75	-	12.5	3.0 - 5.0	65 - 78	≤ 90.0
	Design Parameter					Design Criteria			
All Mix Types	Dust to Binder Ratio ($P_{0.075}$ / P_{be})					0.6 - 1.4 [E]			
	Tensile Strength Ratio (TSR)					85% Min.[C,D]			

A. Based on 20 year design traffic.

B. Volumetric Properties based on specimens compacted to N_{des} as modified by the Department.

C. TSR for Type S4.75A & B25.0X mixes is 80% minimum.

D. NCDOT-T-283 (No Freeze-Thaw cycle required).

E. Dust to Binder Ratio ($P_{0.075}$ / P_{be}) for Type S4.75A is 1.0 – 2.0.

TABLE 610-4 SUPERPAVE APPLICABLE VIRGIN ASPHALT GRADES			
Mix Type	Percentage of RAP in Mix		
	Category 1[A]	Category 2[B]	Category 3[C]
	% RAP ≤ 20%	*21% ≤ % RAP ≤ 30%*	*% RAP > 30%*
All A and B Level Mixes, I19.0C, B25.0C	PG 64-22	PG 64-22	Established by Engineer
S9.5C, S12.5C, I19.0D	PG 70-22	PG 64-22	Established by Engineer
S9.5D and S12.5D	PG 76-22	-	-

A. Category 1 RAP has been processed to a maximum size of 2".

B. Category 2 RAP has been processed to a maximum size of 1" by either crushing and or screening to reduce variability in the gradations.

C. Category 3 RAP has been processed to a maximum size of 1", fractionating the RAP into 2 or more sized stockpiles.

4.7 NCDOT "MASTER" JOB MIX FORMULA PROCEDURES

Once a mix design for a specified mix type has been approved, and if the Asphalt Design Engineer is in concurrence with the design and proposed target values, the JMF data will be entered into the NCDOT HiCAMS computer system. This "Master" JMF will be for a specific plant and will serve for all projects on which that given JMF for the specified mix type is to be used. The Contractor will then place one copy of this AMD/JMF assembly on file at the asphalt plant QC field laboratory for use by all QMS personnel. It is suggested that a bulletin board, preferably with a glass enclosure or a durable notebook with transparent plastic sheeting be used for this purpose. In situations where the JMF is to be used for DOT work and no lab is present, the JMF should be placed on file in the plant control room.

This is the JMF that both the Contractor QC and the DOT QA personnel will be using for producing and testing the mixture, respectively. This JMF will possibly be used for a significant period of time and must be kept in a safeguarded manner. This posted copy will be readily available to all QC/QA personnel and will also serve for all projects until voided or revisions are authorized by the Asphalt Design Engineer or his representative.

When the Contractor is ready to begin producing mixture, he will advise the QA Supervisor which JMF he intends to produce. Inasmuch as there will very likely be several valid JMF's for a given mix type at each plant using different material sources and combinations, the Contractor must use caution to ensure that the appropriate materials as required by the formula are being used. In addition, he must ensure that the latest version of the formula is being used and the correct JMF number is being recorded on weight tickets. The QA Supervisor will compare his test results with this JMF for compliance with specifications.

As a JMF is revised in the field for whatever reasons, the Asphalt Design Engineer will send to the Contractor an updated copy showing the revisions and the effective date. The Contractor must make certain that these updated copies are posted in the field lab as quickly as possible and that the voided copies are removed. (There may be situations where verbal approval is given by the Asphalt Laboratory prior to the actual posting of the JMF data). While it would be desirable to have the valid JMF posted at the plant at all times, it is realized that delays due to mailing will occur. Verbal approval can be given in these situations but everyone must strive to keep this to a minimum. Master Job Mix Formulas for the standard mix types covered by the specifications will not be issued directly by the Asphalt Design Engineer for a specific project unless some special circumstance exists.

Included in this Manual are examples of both virgin mix JMF's and recycled mix JMF's. Note that the owner's name, plant location, and plant certification number shown on the JMF are the same as shown on the plant certification certificate. JMF's will indicate a specific anti-strip additive supplier, brand, and rate and must be used unless otherwise approved by the Engineer.

4.8 COMPOSITION OF RECYCLED MIXTURES (JOB MIX FORMULA)

When the Contractor elects to use a recycled mixture on a project, he must submit to the Department's Materials and Tests Unit his proposed mix design and JMF target values in accordance with Article 610-3 of the Standard Specifications and this Manual. The reclaimed asphalt materials (RAP or RAS) shall be tested for the following properties: (1) asphalt content, (2) aggregate gradation, (3) aggregate effective specific gravity, and (4) asphalt viscosity and performance grade (PG) of the RAP asphalt, if more than 30% RAP is proposed.

The gradation of the reclaimed aggregates is analyzed to determine the gradation of the virgin aggregates required. Using the gradation of the aggregate from the RAP material and the new aggregates, the approved design lab will design a combined gradation meeting the specifications. The asphalt content of the RAP material is used to determine the amount of asphalt binder to be added in the recycled mixture. The performance grade parameters of the asphalt in the RAP material (if more than 30%) will determine the required grade of the additional asphalt binder in the recycled mixture. The new asphalt binder added to the recycled mix serves two purposes. It increases the total asphalt content to meet the requirements of the mix and it blends with the aged asphalt in the reclaimed portion of the mix to yield an asphalt meeting the desired specifications.

Reclaimed asphalt pavement (RAP) may constitute up to 50% of the total material used in recycled mixtures, except for mix Type S 12.5D, Type S 9.5D, and mixtures containing reclaimed asphalt shingle material (RAS). Reclaimed asphalt shingle (RAS) material may constitute up to 6% by weight of total mixture for any mix. When both RAP and RAS are used, do not use a combined percentage of RAS and RAP greater than 20% by weight of total mixture, unless otherwise approved. When the percent of binder contributed from RAS or a combination of RAS and RAP exceeds 20% but not more than 30% of the total binder in the completed mix, the virgin binder PG grade shall be one grade below (both high and low temperature grade) the binder grade specified in Table 610-3 for the mix type, unless otherwise approved. When the percent of binder contributed from RAS or a combination of RAS and RAP exceeds 30% of the total binder in the completed mix, the Engineer will establish and approve the virgin binder PG grade. Use approved methods to determine if any binder grade adjustments are necessary to achieve the performance grade for the specified mix type.

For Type S 12.5D and Type S 9.5D mixes, the maximum percentage of reclaimed asphalt material is limited to 20% and shall be produced using virgin asphalt binder grade PG 76-22. For all other recycled mix types, the virgin binder PG grade shall be as specified in Table 610-4 for the specified mix type. When the percentage of RAP is greater than 20% but not more than 30% of the total mixture, use RAP meeting the requirements for processed or fractionated RAP in accordance with the requirements of Section 1012-1. When the percentage of RAP is greater than 30% of the total mixture, use an approved stockpile of RAP in accordance with Section 1012-1(F). Use approved test methods to determine if any binder grade adjustments are necessary to achieve the performance grade for the specified mix type. The Engineer will establish and approve the virgin asphalt binder grade to be used.

Samples of the completed recycled mixture may be taken by the Department on a random basis to determine the PG grading on the recovered asphalt binder in accordance with AASHTO M 320. If the grading is determined to be a value other than specified in Table 610-3 for the required mix type, the Engineer may require the Contractor to adjust the grade and/or percentage of additional asphalt binder, and/or the blend of reclaimed material to bring the grade to the specified value. Once the total asphalt demand has been determined, the amount of new asphalt binder to be added in the recycled mixture is then calculated. This quantity equals the calculated asphalt demand minus the percentage of asphalt in the reclaimed asphalt pavement. Trial mix designs are then made using the mix design procedures to determine the estimated design asphalt content. The same design criteria are used for recycled mixes as are used with virgin mixes of the same type.

The Job Mix Formula will establish the percentage of reclaimed aggregate, the percentage of each additional aggregate required, a single percentage of combined aggregate passing each sieve size, the total percentage of asphalt binder in the mixture, a single percentage of additional asphalt material to be added, the percentage of chemical anti-strip additive to be added to the additional asphalt material or percentage of hydrated lime to be added to the aggregate, a single temperature at which the mixture is to be discharged from the plant, the required field density, and other volumetric properties. In addition, the Job Mix Formula will establish the blend ratio and percent binder in the RAP.

Should a change in the source of virgin aggregate be made, a new job mix formula will be required before the new mixture is produced. Should a change in the source or properties of the RAP be made, a new mix design and/or JMF may be required based on the requirements of Article 1012-1 of the Standard Specifications (see Section 8.3).

Samples of the completed recycled asphalt mixture may be taken by the Department on a random basis to determine the performance grading on the recovered asphalt binder in accordance with AASHTO M 320. If the viscosity is determined to be out of this specified range, the Engineer may require the Contractor to adjust the additional asphalt material formulation and/or blend of reclaimed material to bring the viscosity within the allowable range.

4.9 PROJECT FILE JOB MIX FORMULA PROCEDURES

Job Mix Formulas (JMF) are maintained in the Highway Construction and Materials System (HiCAMS), including revised and voided JMF's. HiCAMS automatically pulls information from the JMF to calculate the quantity of asphalt binder to be paid based upon the quantity of plant mix material placed and JMF in effect at the time the work is performed. Since copies of those JMF can be obtained at any time, the Resident Engineer is not required to maintain paper copies of the JMF within the project Files.

When a given JMF is revised, the void date will be entered on the voided formula by the Asphalt Design Engineer's office and this date will appear on all copies obtained through the computer after that date. The new or revised JMF will show the new number assigned and the effective date. This new JMF will be entered into the computer system and the cycle repeated as noted in the "Master" JMF procedures. Again, it is critical that the QC technician has the correct JMF number and shows same on his daily reports. If the JMF is revised, the technician at the plant will be advised of the new JMF number at that time and will note the revised number and date on the copy posted at the plant. This revised JMF will be used until the Contractor receives and posts the new JMF at the plant.

A listing of all Job Mix Formulas issued to a specific asphalt plant can be obtained from the local QA Supervisor. It should be noted that this listing shows all Job Mix Formulas issued to a plant including any "voided" formulas. Therefore, everyone must be careful to assure that the Contractor is using the most current JMF and not a voided formula.

4.9.1 Mix Type Designations

	Virgin	***Recycled***
Asphalt Concrete Surface Course, Type SA-1	SA-1	RSA-1
Asphalt Concrete Surface Course, Type S 4.75 A	S 4.75A	RS 4.75A
Asphalt Concrete Surface Course, Type SF 9.5 A	SF 9.5A	RSF 9.5A
Asphalt Concrete Surface Course, Type S 9.5 B	S 9.5B	RS 9.5B
Asphalt Concrete Surface Course, Type S 9.5 C	S 9.5C	RS 9.5C
Asphalt Concrete Surface Course, Type S 9.5 D	S 9.5D	RS 9.5D
Asphalt Concrete Surface Course, Type S 12.5 C	S 12.5C	RS 12.5C
Asphalt Concrete Surface Course, Type S 12.5 D	S 12.5D	RS 12.5D
Asphalt Concrete Intermediate Course, Type I 19.0 B	I 19.0B	RI 19.0B
Asphalt Concrete Intermediate Course, Type I 19.0 C	I 19.0C	RI 19.0C
Asphalt Concrete Intermediate Course, Type I 19.0 D	I 19.0D	RI 19.0D
Asphalt Concrete Base Course, Type B 25.0 B	B 25.0B	RB 25.0B
Asphalt Concrete Base Course, Type B 25.0 C	B 25.0C	RB 25.0C

4.9.2 Job Mix Formula Numbering System

Job Mix Formula numbers will be 9 digits with a 4 character code at the end. This is the number shown on the JMF posted at the plant and shown on all appropriate reports. Job Mix Formulas are accessible by QA Supervisors and Resident Engineers through HiCAMS.

Ex: xx-yyyy-abc-defg where:

xx = Calendar Year
yyyy = Sequential number assigned by HiCAMS System

a = plant number, (1 for 1st plant 2 for a 2nd plant, etc.)
b = anti-strip percentage (2 for 0.25%, 5 for 0.5% etc.)
c = JMF revision number
defg = Code for Mix Type (see the following Table)

CODE	Mix Type Description	CODE	Mix Type Description
HMAC	*Hot-Mix Asphalt Concrete [Default]*	WMDB	Warm Mix Astec Double Barrel Green
		WM3G	Warm Mix Evotherm 3G
MRAS	Manufacturer RAS	WMUF	Warm Mix Gencor Ultrafoam
PRAS	Post-Consumer RAS	WMLC	Warm Mix LOF6500 + CecaBase RT
RPAS	RAP-RAS Mixture	WMAB	Warm Mix Maxam AquaBlack
		WMAF	Warm Mix Meeker AquaFoam
RP05	RAP Mix 5%	WMSB	Warm Mix Sasol Sasobit
RP10	RAP Mix 10%	WMAD	Warm Mix PQ Corp. Advera
RP15	RAP Mix 15%	WMTX	Warm Mix Terex WMA
RP20	RAP Mix 20%		
RP21	RAP Mix 21%	FC1A	OGFC Type FC-1 w/Additive
RP25	RAP Mix 25%	FC1F	OGFC Type FC-1 w/Fibers
RP30	RAP Mix 30%	FC1S	OGFC Type FC-1 w/Shingles
RP40	RAP Mix 40%	FC2A	OGFC Type FC-2 w/Additive
RP45	RAP Mix 45%	FC2F	OGFC Type FC-2 w/Fibers
RP50	RAP Mix 50%	FC2S	OGFC Type FC-2 w/Shingles
MCS2	Micro-surfacing, Type II	UBWC	Ultra-thin Bonded Wearing Course
MCS3	Micro-surfacing, Type III		
		DC78	Permeable Asphalt Drainage Course, Type P-78M
SSTB	Slurry Seal, Type B	DC57	Permeable Asphalt Drainage Course, Type P-57
SSTC	Slurry Seal, Type C		

North Carolina Department of Transportation

HOT MIX ASPHALT JOB MIX FORMULA (SUPERPAVE)

Contractor:	Quality Paving Co. - NCDOT Everywhere, NC	Material:	Asphalt Concrete Surface Course, Type RS 9.5B
Plant Location:	Everywhere, NC	Asphalt Type:	RP15 - RAP Mix 15%
Plant ID:	AS205	AMD:	12-0222 JMF: 12-0222-151
County:	Wake	Effective Date:	11/09/2011 (Approved)
		Contract:	WBS:

AGGREGATE SOURCES AND BLEND PERCENTAGES

APPROVED SUPPLIER	OTHER SUPPLIER	MATERIAL	BLEND %
Martin Marietta Garner Quarry - Garner		Coarse Aggregate, #78M	38.0
Martin Marietta Garner Quarry - Garner		Screenings, Washed	35.0
Carolina Sand, Inc. (S. Carolina) Pee Dee Plant		Sand, Natural	12.0
	Stockpile	RAP Aggregate, Fine	15.0
		TOTAL	100.0

JMF COMBINED GRADATION

SIEVE SIZE	% PASSING
50.0 mm	100
37.5 mm	100
25.0 mm	100
19.0 mm	100
12.5 mm	100
9.5 mm	96
4.75 mm	68
2.36 mm	51
1.18 mm	40
0.600 mm	28
0.300 mm	16
0.150 mm	9
0.075 mm	5.2

Total Binder %:	6.3
Asphalt Binder Grade:	PG 64 -22
Asphalt Pay Binder Grade:	PG 64 -22
Gmm meas (Rice):	2.441
Gmb Ndes:	2.343
Gsb:	2.671
Gse:	2.689
Gsa:	2.701
Binder Specific Gravity:	1.035
% AC Absorption:	.26
VTM Ndes:	4.0
VMA Ndes:	17.8
VFA Ndes:	77.5
Mix Temperature °F:	300
Minimum Compaction %:	92.0
Rut Depth:	
Anti-Strip Additive %:	.50
Modifier %:	.00
Nini/Ndes/Nmax:	7/65
Add'l Binder %:	5.7
% Binder from RAP:	.6
Other Binder %:	.0
Blend Ratio:	.0 / 15.0 / 85.0
% AC in RAP:	3.9
% AC in RAS:	.0

Binder Supplier: Axeon SP - Binder Wilmington, NC (#03)

Anti-Strip Supplier: Arr-Maz Products Winter Haven, FL

Anti-Strip Product: Ad-Here LOF 6500

Comment: QMS Manual

Information contained herein may have been designated or indicated as "confidential" or as a "trade secret" at the time of its initial disclosure to the Department of Transportation. This information is intended for use by the Department and shall not be revealed to others without the approval of the Pavement Construction Engineer.

Approved By: Asphalt Design Engineer

Charles R. Colgate

Charles R. Colgate

4.10 ASPHALT MIX DESIGN AND TESTING CALCULATIONS/FORMULAS

(from Asphalt Institute's, SP-2, 3rd ed.)

1. Combined Aggregate Bulk Specific Gravity (G_{sb}):

$$G_{sb} = BSG = \frac{100}{\frac{\%\,Agg.\#1}{BSG\ Agg.\#1} + \frac{\%\,Agg.\#2}{BSG\ Agg.\#2} + \cdots + \frac{\%\,Agg.\#n}{BSG\ Agg.\#n}} = \frac{P_1 + P_2 + \cdots + P_n}{\frac{P_1}{G_1} + \frac{P_2}{G_2} + \cdots + \frac{P_n}{G_n}}$$

2. Effective Specific Gravity of Aggregate Using Rice MSG (G_{se}):

$$G_{se} = Eff.SG = \frac{100 - \%\,Binder}{\frac{100}{Max.SG} - \frac{\%\,Binder}{Binder\ SG}} = \frac{P_{mm} - P_b}{\frac{P_{mm}}{G_{mm}} - \frac{P_b}{G_b}} \qquad where, P_{mm} = 100$$

3. Maximum Specific Gravity of Mix With Different Binder Contents (G_{mm}):

$$G_{mm} = Max.SG = \frac{100}{\frac{\%\,Agg.}{Agg.Eff.SG} + \frac{\%\,Binder}{Binder\ SG}} = \frac{P_{mm}}{\frac{P_s}{G_{se}} + \frac{P_b}{G_b}} \qquad where, P_{mm} = 100$$

4. % Asphalt Absorption by Weight of Total Aggregate (P_{ba}):

$$P_{ba} = 100\left[\frac{(Eff.SG) - (Agg.Bulk\ SG)}{(Agg.Bulk\ SG)(Eff.SG)}\right](Binder\ SG) = 100\left[\frac{G_{se} - G_{sb}}{(G_{sb})(G_{se})}\right]G_b$$

5. % Effective Binder Content (by Weight of Total Mixture) (P_{be}):

$$P_{be} = \%\,Binder - \left[\frac{\%\,Abs.Binder}{100}(\%\,Agg.)\right] = P_b - \left[\frac{P_{ba}}{100}(P_s)\right]$$

6. Percent Voids in Mineral Aggregate (VMA) in Compacted Mixture:

$$VMA = 100 - \left[\frac{(Lab\ SG)(\%\,Agg.)}{Agg.Bulk\ SG}\right] = 100 - \left(\frac{G_{mb}P_s}{G_{sb}}\right) \qquad where, P_s = \%Agg.\,by\ wt.\,of\ total\ mix$$

Note: NCDOT Mix Composition is by Weight of Total Mixture: *Example: 6.0% binder is by weight of total mixture.*

7. Percent Air Voids (V_a) in Compacted Mixture or Voids in Total Mix (VTM):

$$VTM = 100\frac{(Max.SG - Lab\ SG)}{(Max\ SG)} = 100\left(\frac{G_{mm} - G_{mb}}{G_{mm}}\right)$$

8. % Voids Filled with Asphalt (VFA) in Compacted Mixture:

$$VFA = 100\frac{\%\,Vol.Binder\ (effective)}{\%\,VMA} = 100\frac{(VMA - VTM)}{VMA}$$

9. Bulk Specific Gravity of Compacted Mix Specimen or Core (G_{mb}):

$$G_{mb} = \frac{Weight\ in\ Air}{(SSD\ Weight - Weight\ in\ Water)} = \frac{A}{B - C} \qquad (from\ T\ 166)$$

10. Unit Weight Total Mix (γ_m):

$$\gamma_m = Unit\ Weight\ (lb/ft^3) = (Mix\ SG)(\gamma_{water}) = G_{mb}(62.4) \qquad where, Unit\ Wt.\ of\ Water\ (\gamma_{water}) = 62.4\ lb/ft^3$$

11. % Solids by Volume Total Mix (P_{solids}):

$$P_{solids} = \frac{Lab\ SG}{Max\ SG} \times 100 = \frac{G_{mb}}{G_{mm}} \times 100$$

12. Percent Asphalt Absorption by Weight of Total Mixture (P'_{ba}):

$$P'_{ba} = (\%\ Binder\ Absorption\ by\ Wt.\ of\ Agg.)\frac{(\%\ Agg.)}{100} = P_{ba}\left(\frac{P_s}{100}\right) \qquad where, P_s = \%\ Agg.\ by\ wt.\ of\ total\ mix$$

13. Percent by Volume of Effective Binder (V_{be}):

$$V_{be} = \%\ Vol.(eff.)Binder = \frac{(\%\ eff.Binder\ by\ Wt.)(Lab\ SG)}{(Binder\ SG)} = \frac{(P_{be})(G_{mb})}{G_b}$$

14. % Solids by Volume of Aggregate Only ($P_{(solids\text{-}agg.only)}$):

$$P_{solids-agg.only} = \%\ Solids\ by\ Volume\ Total\ Mix - \%\ Volume\ (Effective)Binder = P_{solids} - V_{be}$$

15. % Binder (Back Calculated from Rice SG) (P_b)*:

$$P_b = \frac{(100)(Binder\ SG)\left[\left(\frac{Eff.SG}{Max.SG}\right) - 1\right]}{(Eff.SG - Binder\ SG)} = \frac{100\ G_b\left[\left(\frac{G_{se}}{G_{mm}}\right) - 1\right]}{(G_{se} - G_b)}$$

*Note: Cannot be used when Eff. S.G. is computed from the same Rice Test.

17. General Voids In Mineral Aggregate Relationship:

$$VMA = \%\ Air\ Voids + \%\ Eff.Binder\ by\ Vol. = VTM + V_{be}$$

18. Dust/Binder Ratio $P_{0.075}/P_{be}$:

$$Dust/Binder\ Ratio = \frac{P_{0.075}}{P_{be}}$$

Where: $P_{0.075}$ = % Passing 0.075mm (no.200) Sieve by Washing

P_{be} = % Effective Binder by Wt. of Total Mixture

SECTION 5

ASPHALT PLANT EQUIPMENT

5.1 BASIC OPERATION OF AN ASPHALT PLANT

Asphalt paving mixes made with asphalt binder are prepared at an asphalt mixing plant. Aggregates are blended, heated and dried, and mixed with asphalt binder to produce a hot asphalt paving mixture. The mixing plant may be small and simple or it may be large and complex, depending on the type and quantity of asphalt mixture being produced. The plant may be stationary (permanent) or portable.

5.2 TYPES OF ASPHALT PLANTS

Asphalt plants are basically of three general types:

(1) Batch plant; (2) Drum mix plant; (3) Continuous mix plant

The specifications include specific equipment requirements for each type plant. However, the two most common types of asphalt plants are **batch plants** and **drum mix plants** and will be discussed in detail in this manual. Continuous mix plants are not covered, since these are very similar to Batch Plants. They are essentially batch plants that are controlled by the cold feeds.

5.3 CERTIFICATION OF ASPHALT PLANTS

All plants used to produce asphalt mix for DOT projects are certified by the Division of Highways as meeting the requirements of the specifications. The initial inspection for plant certification will be made by the Asphalt Design Engineer or his representative upon request from the Contractor. A certificate of compliance, (Figure 5-1), including a copy of the certification checklist, will be issued to the plant owner. The Certificate **shall be displayed** in the plant control room. This certification is effective from the date of issuance and is non-expiring, subject to continued compliance. Any plant which is significantly modified, relocated or which changes ownership must be recertified prior to use and a new certificate issued.

A list of all certified Asphalt Plants is available by contacting the Asphalt Laboratory or using the "Producer/Supplier" website at:

https://apps.dot.state.nc.us/vendor/approvedproducts/Producer.aspx

Changes in certifications and the addition of new certifications will be updated in the system as they occur by the Asphalt Design Engineer. Updated listings will be furnished periodically to each Division QA Supervisor, or to anyone upon request.

At the beginning of each season, and any time deemed necessary by the Engineer, each plant site will be checked for compliance with the specifications. This check will be performed by the QA supervisor or his representative and documented in writing in a daily log or diary. When QA Supervisors find anything out of compliance with the specifications, it should be documented in writing. The Contractor and the Asphalt Design Engineer shall be notified immediately.

This certification covers all plant equipment, including recycling equipment. This certification does not certify the Contractor's Quality Control Laboratory nor does it ensure the plant's mix quality. Field Lab tests performed during production is required to ensure mix quality. The plant certification also doesn't ensure accuracy of weighing devices. Refer to the appropriate section of this manual for specific requirements of weighing devices.

Figure 5-1
Plant Certificate

NORTH CAROLINA DEPARTMENT of TRANSPORTATION

HMA/QMS

Certified Asphalt Plant

This asphalt plant has been inspected and certified as meeting the requirements of North Carolina Department of Transportation Standard Specifications for Roads and Structures Article 610-5, dated July, 2006 and other contract provisions currently in effect.

This Certification shall remain effective from the date of issuance until there is a change in ownership, location, or major modifications are made to the plant equipment, subject to continued compliance with the specifications.

Quality Paving Co., Inc.
Owner

Everywhere, N.C.
Site

AS-001
Plant Certification No.

CMI
Make

Drum
Type

PTD-400
Model No

400 TPH
Rated Capacity

12345
Serial No.

Yes
Certified for Recycled Mixes? (Y/N)

Todd W. Whittington,
State Asphalt Design Engineer

5.4 ASPHALT PLANT SPECIFICATION CHECKLIST

The following inspection checks are to be made and used frequently by both **QA** and **QC Technicians** at the asphalt plant. In addition to performing the following checklist, the Quality Assurance personnel should periodically perform an inspection of the QC operations. Frequent visits to the plant should be made.

ITEMS TO BE CHECKED:

GENERAL REQUIREMENTS FOR *ALL PLANTS*

1. Check to see if the plant is certified in accordance with the Standard Specifications?
   If so, document for QA records on QA-4 or diary.
2. Check the stockpiles for:
   - (a) gradation
   - (b) uniformity
   - (c) segregation
   - (d) contamination
   - (e) ample space or bulkheads between stockpiles
   - (f) availability of materials as specified on job mix formula
3. Check cold feeders for:
   - (a) separate bin for each material size to be used
   - (b) a separate bin provided for mineral filler, if required
   - (c) bins loaded in a manner such that materials will not be mixed
   - (d) all gates in workable condition
   - (e) synchronized proportioning system when two or more bins used
   - (f) vibrators on bins where needed in workable order
   - (g) all cold feeders equipped with “no-flow” sensors and in good operating condition
   - (h) cold feeders calibrated in accordance with the job mix formula and documented as required
4. Check dryer drum for:
   - (a) capability of continuously agitating aggregate
   - (b) thermometric instrument in discharge chute functioning properly
   - (c) automatic burner control functioning
   - (d) operation of Warm Mix water injection system
5. Check trucks for:
   - (a) the truck bodies are smooth and clean
   - (b) the body is washed down with an approved release agent and well drained before loading
   - (c) covers are being used on trucks and are of adequate size such that they will cover the load and prevent the entrance of moisture or rapid loss of temperature
   - (d) proper loading (three dumps at different locations within the bed of the truck)
   - (e) each truck body has a hole at least 3/8 inch (10mm) in diameter on each side of the body six inches (150mm) above the floor to facilitate the checking of temperature
6. Check to see if a satisfactory truck access **(sampling platform)** is provided
7. Check truck scales for:
   - (a) truck scales accurately calibrated and certified by Department of Agriculture in accordance with Article 106-7 of the Standard Specifications
   - (b) automatic weighing and recording equipment is operating properly, if used
   - (c) the Contractor's public weighmaster is properly licensed and current
   - (d) certified weight certificates are being issued in accordance with Article 106-7
8. Check Field Laboratory and Testing Equipment for:
   - (a) The laboratory is certified as meeting the requirements of Subarticle 609-5 (B) of the Specifications
   - (b) All testing equipment is available and in good operating condition and properly calibrated
9. Have the proper field mix verification tests been performed in accordance with section 609-4 of the Specifications and the most current edition of the *HMA/QMS Manual* on the mix type being produced?

BATCH PLANT OPERATIONS

10. Check hot bins and screens for:
    - (a) screens and screen deck are in satisfactory condition
    - (b) screening system is capable of removing oversize material
    - (c) hot bin sampling devices are operational
    - (d) hot bin overflow chutes are functional so as to prevent spillage into other bins
    - (e) gates close tightly to prevent leakage
    - (f) no holes exist in bin partitions
11. Mineral Filler, if needed, is introduced into the mix as specifications require
12. Check weigh box or hopper for:
    - (a) capability of weighing each size aggregate automatically
    - (b) gates closing tightly to prevent spillage into mixer
    - (c) Form QC-2 (scale check) completed for aggregate scales and asphalt scales and **posted** at plant site, and a copy provided to the Division QA Supervisor
13. Check mixer for:
    - (a) no leaks occur in mixer box during mixing
    - (b) condition and clearance of mixer blades from fixed and moving parts adequate to assure complete mixing and coating of aggregate
    - (c) timing device set and locked at desired mixing time
    - (d) batches are being mixed at rated capacity of mixer
    - (e) required mixing time is being obtained after the asphalt starts being discharged into the pugmill
    - (f) the mix is of uniform appearance and temperature
14. Recycling Equipment, if applicable: (RAP/RAS)
    - (a) is plant equipped to automatically weigh and proportion the reclaimed material according to the job mix formula requirements?
    - (b) have weighing devices for reclaimed material been checked and calibrated to meet Specification tolerances?

DRYER-DRUM OPERATIONS

15. Check plant for:
    - (a) aggregate belt scales have been calibrated
    - (b) asphalt binder metering system has been calibrated
    - (c) aggregate moisture percentage has been determined and entered into control system
    - (d) asphalt binder specific gravity data from mix design or most recent load ticket been entered correctly
    - (e) vibratory scalping screen is functional
    - (f) aggregate and asphalt binder feed rates are automatically interlocked
16. Check asphalt binder system for:
    - (a) adequate circulation of asphalt binder and anti-strip additives
    - (b) silicone has been added for surface mixes
    - (c) anti-strip additive has been added in correct amounts at the terminal when required by the job mix formula or either in-line blending to be done at plant
    - (d) totalizer flow meter properly installed and operating properly (If anti-strip additive introduced at plant site).
    - (e) thermometer in binder feedline operating and temperature of asphalt binder is at mixing temperature
    - (f) no leaks in system occur in work area
    - (g) asphalt binder scales or meter are accurately calibrated
    - (h) form QC-2 (scale check) completed for aggregate weigh bridges, binder meters and anti- strip additive meters with a copy provided to the QA Supervisor
17. Check if automatic proportioning and mixing equipment (including anti-strip, WMA, or fiber additive equipment) is operating properly and being used to produce mix
18. Recycling equipment, if applicable:
    - (a) is plant equipped to automatically weigh and proportion the reclaimed material according to the job mix formula requirements?
    - (b) have weighing devices for reclaimed material been checked and calibrated to meet Specification tolerances with form QC-2 completed and furnished to the QA Supervisor?

5.5 BATCH PLANT OPERATIONS AND COMPONENTS

Batch plants get their name from the fact that, during operation, they produce asphalt mix in batches, producing one batch at a time, one after the other. The size of a batch varies according to the capacity of the plant's pugmill (the mixing chamber where aggregate and binder are blended together). The Specifications require a minimum batch capacity of 3,000 lbs. A typical batch capacity is about 6,000 lbs.; however, this may be as great as 12,000 lbs.

Certain basic operations are common to all batch plants. They are:

- Aggregate storage and cold feeding.
- Aggregate drying and heating.
- Screening and storage of hot aggregates.
- Storage and heating of asphalt binder.
- Measuring and mixing of asphalt binder and aggregate.
- Loading of finished asphalt mix.

Figure 5-2 illustrates the major components of a typical asphalt batch plant. Each component or group of related components is discussed in detail in sections that follow; however, an overview of the processes involved in plant operations will help the technician to understand the functions and relationships of the various plant components.

Figure 5-2
Major Batch Plant Components

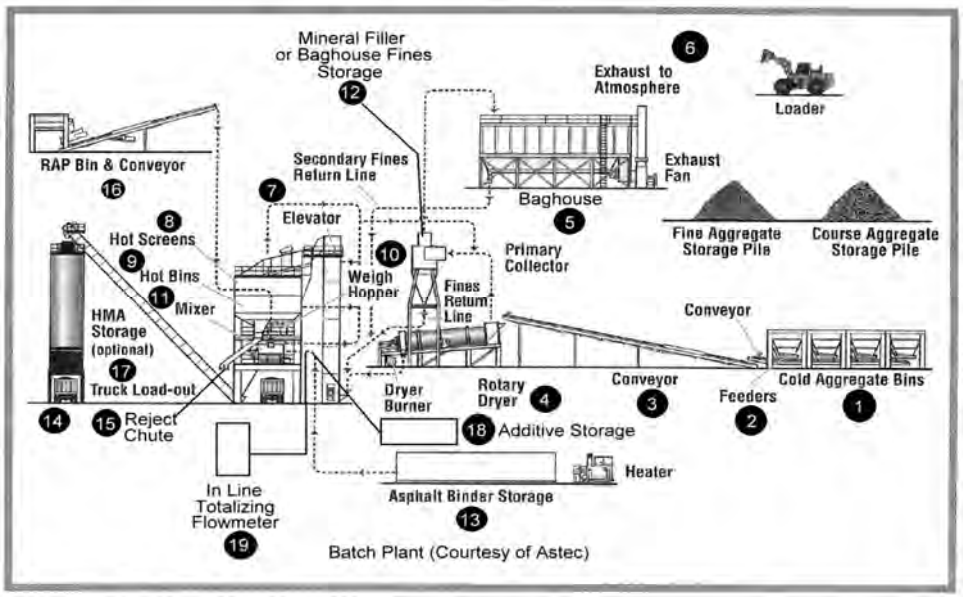

Cold (unheated) aggregates stored in the **cold bins (1)** are proportioned by **cold-feed gates (2)** on to a **belt conveyor or bucket elevator (3)**, which delivers the aggregates to the **dryer (4)**, where they are dried and heated. The **baghouse (5)** removes undesirable amounts of dust from the dryer exhaust. Remaining exhaust gases are eliminated through the plant **exhaust stack (6).** The dried and heated aggregates are delivered by **hot elevator (7)** to the **screening unit (8)** equipped with a scalping screen to remove any oversized material. This oversized material is deposited into a **reject chute (15)** for disposal. The material is then sized into different sized fractions and deposited into separate **hot bins (9)** for temporary storage. When needed, the heated aggregates are measured in controlled amounts into the **weigh box (10).** The aggregates are then dumped into the **mixing chamber or pugmill (11),** along with the proper amount of mineral filler, if needed, **from mineral filler or baghouse fines storage (12).** If the plant is capable of producing recycled mixes then a **RAP Bin and conveyor (16)** is needed. Heated asphalt binder from the hot **asphalt binder storage tank (13)** is pumped into the **asphalt binder weigh bucket (14)** which weighs the asphalt binder prior to delivering it to the mixing chamber or pugmill where it is combined thoroughly with the aggregates, baghouse fines or mineral filler if used. From the mixing chamber asphalt mix is deposited into waiting trucks or delivered into **storage silos or surge bins (17).** When anti-strip additives are introduced at the plant site an **additive storage tank (18)** is required with a **totalizing flowmeter (19),** which is not capable of being reset, mounted in the additive feed line just prior to introduction into the binder feed line.

5.6 DRUM-MIX PLANT OPERATIONS AND COMPONENTS

Drum mixing is a relatively simple process of producing asphalt mix. The mixing drum from which this type of plant gets its name is very similar in appearance to a batch plant dryer drum. The difference between drum-mix plants and batch plants is that, in the more conventional drum-mix plants the aggregate is not only dried and heated within the drum, but also mixed with the asphalt binder. However, there are some more recent model drum mix plants that introduce the asphalt binder outside the drum. The addition of a coater box, which is a pugmill type device, located at the discharge end of the drum allows the asphalt binder to be added into the coater box instead of into the drum. Still other "double barrel" type drum mix plants will add the asphalt binder between an inner and outer drum. The basic concept of all these types is the same though -- a continuous mixing process as compared to the mixing of batches at batch plants. There are no gradation screens, hot bins, or weigh hoppers in a drum-mix plant. Aggregate gradation is controlled at the cold feed and by the gradations of the individual aggregates being used.

Figure 5-3
Basic Drum-Mix Plant

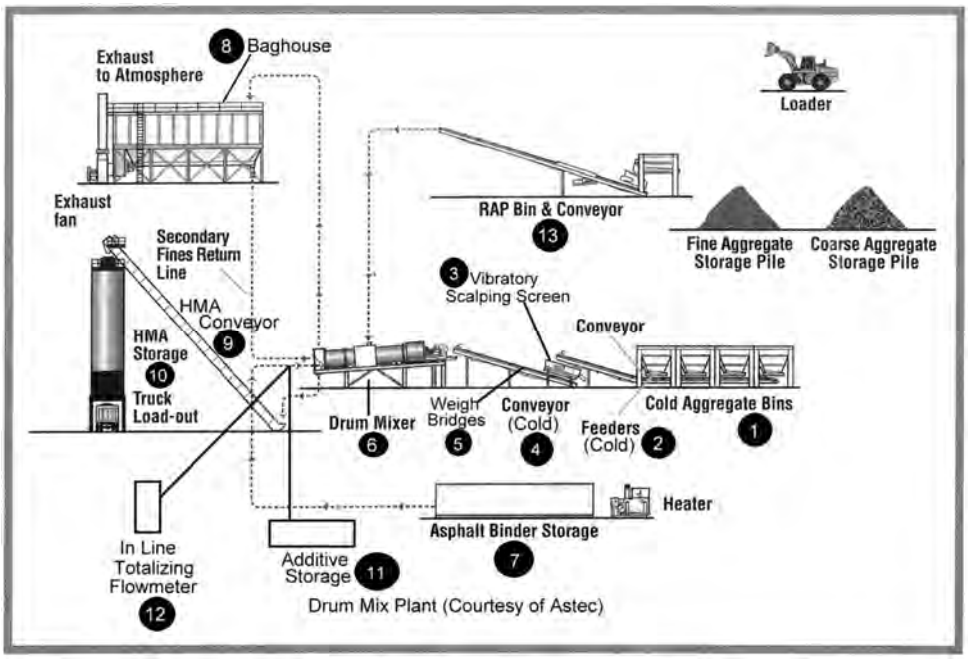

Drum mix plants vary in size and rated capacities from approximately 60 tons per hour up to several hundred tons per hour. Specifications require a minimum production capacity of 90 tons per hour for drum mix plants for certification purposes on all NCDOT construction contracts.

Referring to Figure 5-3, the following is a brief, general description of the sequence of processes involved in a typical drum-mix plant operation: Aggregates are deposited in the **cold feed bins (1)** from which they fed in exact proportions **cold feeders (2)** across a **vibratory scalping screen (3)** on to a **cold-feed conveyor (4).** An automatic **aggregate weighing system or weigh bridges (5)** monitors the amount of aggregate flowing into the **drum mixer (6).** The weighing system is interlocked with the controls on the asphalt binder storage pump which draws asphalt binder from a **storage tank (7)** and introduces it into either the drum, coater box, or between an inner and outer drum, where asphalt and aggregate are thoroughly blended by a mixing action. A dust collection system **baghouse (8)** captures excess dust escaping from the drum. From the drum, the asphalt concrete is transported by **mix conveyor (9)** to a **surge bin or silo (10)** from which it is loaded into trucks and hauled to the paving site. All plant operations are monitored and controlled from instruments in the control room. When anti-strip additives are introduced at the plant site an **additive storage tank (11)** is required with a **totalizing flowmeter (12),** which is not capable of being reset, mounted in the additive feed line just prior to introduction into the binder feed line.

5.7 INTRODUCTION OF ANTI-STRIP ADDITIVE AT BATCH PLANT OR DRUM PLANTS

When anti-strip additives are required in asphalt mix, the anti-strip may be either chemical or hydrated lime or combination of both. When a chemical additive is used, it shall be added to the asphalt binder prior to introduction to the aggregate. Any chemical additive or particular concentration of chemical additive found to be harmful to the asphalt material or which causes the performance grading of the original asphalt binder to be out of specifications for the grade required shall not be used. When anti-strip additives are required the anti-strip shall be introduced and mixed into the asphalt binder at either the supplier's terminal or at the asphalt plant site. In-line blending equipment shall be used at either location. When hydrated lime is used, it shall conform to the requirements of ASTM C 977. Hydrated lime shall be added at a rate of not less than 1.0 percent by weight of the total dry aggregate.

When chemical anti-strip additive is to be added at the asphalt plant in lieu of at the terminal, equip the plant with an in-line blending system capable of metering the additive within plus or minus 10 percent of the amount specified. Interlock the metering device with the asphalt binder control equipment in such a manner as to automatically vary the additive feed rate to maintain the required proportions and which will automatically indicate in the plant control room when flow is obstructed or stops. Inject the additive into the asphalt binder feed line prior to introduction into the aggregate. Equip the feed line with a blending device to thoroughly mix the additive with the asphalt binder prior to mixing with the aggregate. Provide a system capable of being calibrated, checked, and monitored for accuracy and quantity of the amount used. Anti-strip additives are required in all NCDOT asphalt mixes. The quantity of anti-strip additive to be added will be based on the new or additional binder in the mix. Technicians should refer to the Job Mix Formula for the actual % of anti-strip additive for each mix type being produced. The in-line blending system will be equipped with an in-line totalizing flow meter. The following are the guidelines for checking the totalizing flowmeters:

1. Totalizer Flowmeter is required if the chemical additive is introduced to the binder at the plant site.
2. Totalizer Flowmeter must be mounted in the additive feedline past the calibration bypass valve.
3. Totalizer Flowmeters must not be capable of being reset. Meter readings will be the accumulated total flow of additive through the meter.
4. Totalizer Flowmeter is in addition to the calibration meter that is standard on additive systems.
5. Calibration Meters must be mounted in the additive feedline prior to the calibration bypass valve.
6. Additive storage tanks should be capable of being checked for quantity used. Checked either with a calibrated stick or a measuring gauge on the tank.
7. Additive storage tanks shall be equipped with a thermostatically controlled heating system capable of heating and maintaining the additive tank, contents and distribution system at the additive supplier's recommended temperature for the type of additive being used
8. Any metering system not fully meeting the above requirements may only be used with the approval of the Asphalt Design Engineer.

Note: Quality Control personnel are required to read the flowmeter prior to production, during production and at the end of production and record the readings on forms QC-1 and QC-3 as per instructions in Section 12.

5.8 INTRODUCTION OF ANTI-STRIP ADDITIVE AT BINDER SUPPLIER'S TERMINAL

When the additive is introduced at the supplier's terminal, the additive shall be blended in-line for a minimum of 80% of the asphalt binder loading time. The asphalt binder delivery ticket shall show the rate, (or quantity), brand and grade of the additive. The Contractor shall furnish the name of the supplier, shipping point and grade of the anti-strip additive if blended at the plant site. The blending system shall be capable of being calibrated, checked and monitored for accuracy, and amount used. A thermostatically controlled heating system capable of heating and maintaining the additive tank's contents and distribution system at the temperature recommended by the additive supplier for the type additive being used is required. The frequency of calibration of the additive system at the plant site will be the same as for the asphalt binder scales or asphalt binder meters, or as deemed necessary by the Engineer.

5.9 WARM MIX ASPHALT (WMA) TECHNOLOGIES

Warm Mix Asphalt typically incorporates the use of an additive to allow a reduction in the temperatures at which asphalt mixes are produced and placed. Thus, asphalt can be placed in cooler temperature conditions often found at night, early and late in the paving season, and during changing weather conditions. An additional important benefit of the Warm Mix Asphalt technology is the reduction in energy consumption. When Warm Mix Asphalt technologies are implemented, the overall temperature of the mix is often reduced. This means less fuel required at the production plant

to heat the aggregates to the traditional hot mix asphalt (HMA) temperatures. With the decreased production temperature comes the additional benefit of reduced emissions at the plant and during lay down. There are many known technologies that have been developed and used to produce WMA. They include the following:

- Plant production with nozzles injecting water into the stream of hot asphalt binder causing it to foam the asphalt inside the mixing drum. This foaming process allows for better coating of all the aggregate materials in the mix.
- The addition of a synthetic zeolite to create a foaming effect in the asphalt binder.
- The use of organic additives with a low molecular weight wax.
- The addition of a surfactant to reduce the surface tension of the asphalt to allow better coating at lower temperatures without changing the viscosity of the asphalt binder.

An approved products listing of Warm Mix Asphalt (WMA) Technologies for use in North Carolina is available by contacting the Asphalt Laboratory or at the following web link:

https://connect.ncdot.gov/resources/Materials/MaterialsResources/Warm%20Mix%20Asphalt%20Approved%20List.pdf

5.10 N.C. DEPARTMENT OF AGRICULTURE & CONSUMER SERVICES (NCDA & CS) SCALES CERTIFICATION

The NCDOT Standard Specifications require that scales used to weigh materials for payment shall be certified in accordance with rules and regulations set forth by the Standards Division of the Department of Agriculture & Consumer Services (NCDA & CS) in accordance with the General Statutes of North Carolina. These requirements apply to scales used to weigh asphalt mixes for pay purposes. These procedures and regulations are outlined below. Note that the length of certification is generally one year. Satisfactory evidence of certification will be a NCDA & CS sticker placed on the weighing equipment.

NCDA & CS Rules, Regulations and Procedures

1) Contractors, Subcontractors, and suppliers who utilize scales to weigh materials for payment shall have the scales certified by the NCDA & CS in accordance with the rules and regulations set forth by that agency.
2) The NCDA & CS will certify, if appropriate, all existing scales during each calendar year. The effective period of this certification is through December 31 of the following year. For example, any scale certification issued during a calendar year will be effective through the end of the following calendar year.
3) The NCDA & CS will schedule and inspect all existing platform scales during their normal work schedule. The owners of existing platform scales do not need to schedule NCDA & CS for a scale check.
4) On platform scales that have not been certified previously or platform scales that have been relocated, the owners of the scales shall notify the Standards Division of NCDA & CS at least thirty days prior to commencement of any use. If the thirty day notification cannot be met, the owners of the scales may engage a scale company licensed by the NCDA & CS to test and certify the scales. The certification by the licensed scale company will be acceptable until the NCDA & CS inspects and certifies the platform scales.
5) On all other type scales utilized to weigh materials for pay purposes, such as batch plant scales or load cells on silos, the scales owner shall notify the NCDA & CS at least two weeks prior to the actual scales check. NCDA & CS prefers that these type scales be checked during the months of January thru March and will make every effort to check those during that time frame. This type of scale check will not be conducted by NCDA & CS personnel but must be monitored by them for certification. Either the Contractor or a certified scales company may perform this check, but in either case, it must be done under the supervision of NCDA & CS personnel in order for the scales to be certified.
6) No additional compensation or time extension will be allowed for use of a scale company.
7) All scales check should be conducted either prior to any use of new or relocated scales, or prior to the expiration of certification of existing scales.

Note: Section 6 continues in detail with asphalt plant equipment and procedures for both the batch and drum plants. It also outlines procedures and frequency for calibrating the following:

1) cold feed calibrations and different methods (batch and drum plants)
2) asphalt scales, weigh bridges and meter systems (batch and drum plants)
3) computing percentages and weights for hot bins at a batch plant
4) aggregate scale and weigh bridge frequencies (batch and drum plants)
5) anti-strip additive meters system calibration (if anti-strip is introduced at plant site)

SECTION 6

ASPHALT PLANT OPERATIONS

6.1 GENERAL ASPHALT PLANT REQUIREMENTS

6.1.1 Asphalt Binder Storage and Handling

There are numerous grades of asphalt binder, asphalt emulsions, and other asphalt materials used in highway construction. For asphalt mix production, it is the responsibility of both the QC & QA technicians to insure that the proper grade of asphalt binder as shown on the job mix formula is being used. It is also the responsibility of the technicians to see that the asphalt binder is handled and stored properly. Asphalt binder used for NCDOT work must be certified or tested prior to use (See *Delivery and Acceptance of Asphalt Materials* in Section 2).

The QC technician should check to see that the asphalt binder is properly stored and protected. Before production is started, the QC & QA technicians should determine that the asphalt binder to be used is the grade and from the source as that stated on the job mix formula. The technicians should also determine if the asphalt binder has been certified or tested. If there is no evidence of the asphalt binder being certified or tested, the QC technician should immediately notify the Division QA Supervisor.

The asphalt binder storage capacity at the plant must be sufficient to allow uniform plant operation. Where more than one grade of asphalt binder is required for a project, at least one tank will be needed for each grade or the tank must be completely emptied before a different grade is added. ***Different grades of binders shall not be mixed***.

Asphalt binder storage tanks must be capable of being measured so that the amount of material remaining in the tank can be determined at any time. They also must be heated to keep the asphalt binder fluid enough to move through the delivery and return lines. Heating is done either electrically or by circulating hot oil through coils in the tank. Regardless of the heating method used, an open flame must never come in direct contact with the tank or its contents. The specifications state that the asphalt binder shall not be heated to a temperature in excess of the supplier's recommendation while stored or when being used in production of the mix at the plant. Where circulating hot oil is used, the oil level in the reservoir of the heating unit should be checked frequently. A drop in the level could indicate leakage of the hot oil into the tank, leakage which results in contamination of the asphalt binder. All transfer lines, pumps and weigh buckets also must have heating coils or jackets so that the asphalt binder will remain fluid enough to pump. One or more thermometers must be placed in the asphalt binder feed line to ensure control of the asphalt binder temperature, as it is being introduced into the mixer or drum.

The asphalt binder tanks must be equipped with a circulation system capable of uniformly dispersing and mixing additives throughout the total quantity of asphalt binder in the tank. Required additives must be added sufficiently in advance of production so as to insure that they are thoroughly distributed throughout the asphalt binder. See Section 5 for more specific requirements for in-line blending of anti-strip additives. Adequate pumps must be furnished so that asphalt binder can be unloaded from tankers and still continue to operate the plant. A sampling valve or a spigot must be installed in the circulating system or tank to allow sampling of the asphalt binder. When sampling from the circulating system, exercise extreme care, as pressure in the lines may cause the hot asphalt binder to splatter.

6.1.2 Asphalt Mix Temperature Requirements

The temperature of the binder and aggregates must be adequate to allow for proper coating of the aggregate with the binder and sufficient mixing action to produce a uniform asphalt mixture. The completed asphalt mixture must be within a desired range to allow for proper placement and compaction without having damaged the binder in the mix.

The mixing temperature at the asphalt plant will be established on the job mix formula. The mixing temperature will be different depending on the grade of asphalt binder specified in Table 610-3. The JMF mix temperature shall be within the ranges shown in Table 610-1 unless otherwise approved:

TABLE 610-1 MIXING TEMPERATURE AT THE ASPHALT PLANT	
Binder Grade	**JMF Mix Temperature**
PG 58-28; PG 64-22	250 - 290° F
PG 70-22	275 - 305° F
PG 76-22	300 - 325° F

Note: Mixing and Compaction temperatures are based on the specified PG binder grade for each mix type in Table 610-3. When using RAP or RAS with a different binder than specified, use mixing and compaction temperatures based on the original binder grade for that mix type shown in Table 610-3.

These are normal mixing temperatures; however, certain circumstances may call for a higher or lower mixing temperature. Plant and Roadway Technicians should always refer to the most current Job Mix Formula for the correct mixing temperature. The specifications require that the temperature of all mixes when checked in the truck **at the asphalt plant** shall be within **± 25° F of the JMF temperature.** The temperature of the mixture, when discharged from the mixer, shall not exceed 350° F.

6.2 AGGREGATE STORAGE

Good stockpiling and storage procedures are crucial to the production of top-quality asphalt mix. When stockpiled properly, aggregates retain their proper gradation. When stockpiled poorly, aggregate particles segregate (separate by size), and gradation varies at different levels within the stockpile. All handling degrades (breaks down) individual aggregate particles to some extent, and, where different-sized aggregate particles are involved, may cause particle segregation. Therefore, handling should be kept to a minimum to prevent degradation and segregation that could make the aggregate unsuitable for use. The technician should be aware of the effect of various stockpiling and handling practices on aggregate gradation and should encourage good practices at all times.

Aggregates must be handled and stored in a manner that will minimize segregation and avoid contamination. The aggregates should be stockpiled in the vicinity of the plant on firm ground that drains well and has been cleared of vegetation and prepared in such a manner as to protect the aggregates from contamination. Stockpiles must be separated to prevent intermingling. This can be accomplished by positive separation of the stockpiles (space), by using adequate bulkheads, by the use of silos, or other means. If bulkheads are used, they should extend to the full depth of the stockpiles and must be strong enough to withstand the pressures that will be exerted under operating conditions.

Stockpiles should be constructed in layers, rather than in cone shaped piles. Individual truckloads should be spotted close together over the entire stockpile surface. When stockpiling with a crane, each bucketful should be deposited adjacent to another, over the entire area, so that the layers will be of uniform thickness. When constructing, maintaining, or removing aggregates from coarse aggregate stockpiles, one should be careful to minimize degradation caused by the equipment. Operating on top of the stockpiles with either rubber-tired or tracked equipment should be minimized.

6.3 AGGREGATE COLD FEED SYSTEM

The flow of aggregate through an asphalt plant begins at the cold feed bins. The cold feed system (Fig. 6-1) for both batch and drum mix plants consists of a series of cold bins (usually 3 to 5) with gates and feeders mounted under the bins and the entire unit positioned over a collector conveyor belt. As stated in the Specifications, there must be a separate cold feed bin for each aggregate component used in a particular mix type. The usual setup will be four cold bins. Separate feeder bins must be used when RAP / RAS is being incorporated into the mixture.

Each cold bin should be large enough to hold an adequate supply of aggregate. When the bins are mounted together, there should be a baffle between adjacent bins that will prevent one bin from overflowing into the adjacent bin, causing variations in the gradation and properties of the mix. Each bin will be equipped with an adjustable gate opening and a feeder belt to draw aggregate out of each bin at a controlled rate. The aggregate from each feeder is then deposited onto a collector conveyor and then fed into the dryer. The gate openings and feeder belt speeds for the various aggregate feeders must be synchronized and calibrated to deliver the proper amount of each material required by the JMF for each mix. Section 6.4 discusses how to calibrate the cold feed blend ratio being fed into the plant based on specific gate openings and belt speeds to determine conformance with the aggregate blend on the JMF.

Figure 6-1
Three-Bin Cold Feeder and Belt

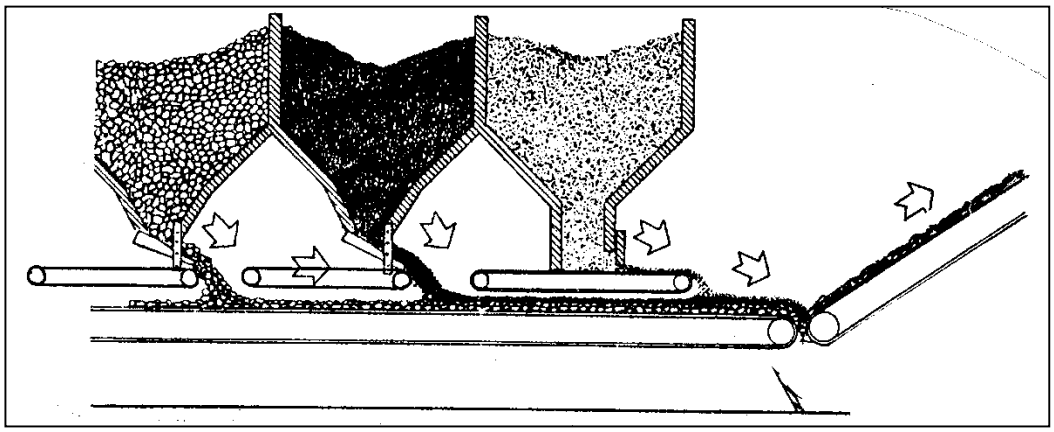

There are several types of cold feeders used on plants, including:

1. Continuous Belt Feeder (Variable Speed Belt), Fig. 6-2
2. Vibratory Feeder, Fig. 6-3
3. Gravity Flow Feeder, Fig. 6-4

Generally, continuous belt and vibratory feeders are best for accurately metering of both coarse and fine aggregates and most commonly used on plants today. A continuous belt feeder system in conjunction with a scalping screen is the type normally used to provide the necessary control for drum mix plants. For a uniform output from the asphalt plant, input must be accurately measured and controlled. Cold feeders must be synchronized so that a change in the feed rate of one is proportional to the feed rate of all others. Each bin must be equipped with a no-flow sensor that will alert the plant operator and/or shut down the plant if aggregate flow stops or becomes restricted. The importance of feeding the required amounts of each size aggregate into the dryer at the correct rate of flow cannot be over-emphasized. This is doubly important when the plant is a drum mixer, since there is no re-grading of the aggregates by a screening unit as at a batch plant.

Figure 6-2
Continuous Belt Feeder (Variable Speed Belt)

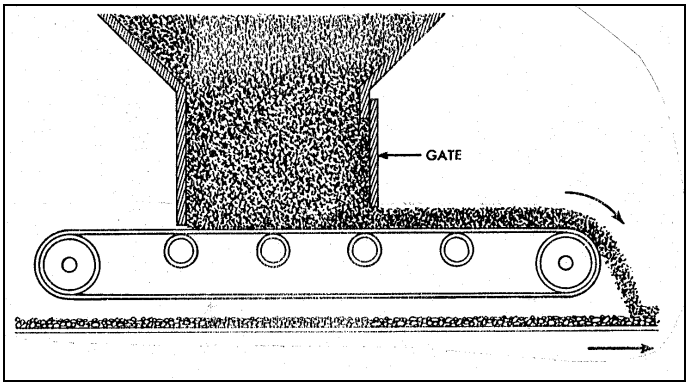

Figure 6-3
Electromagnetic Vibratory Feeder

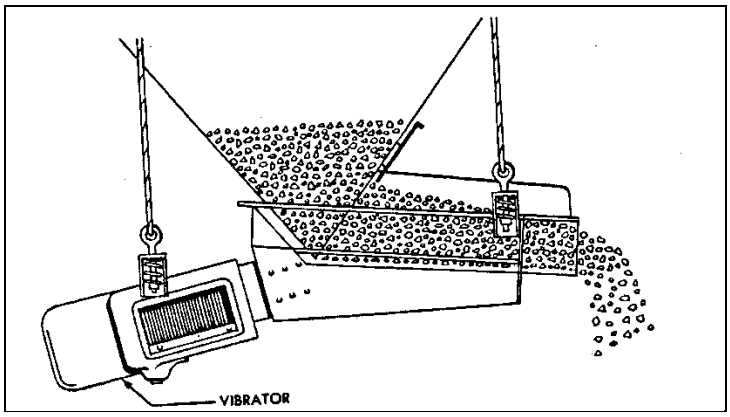

Figure 6-4
Gravity Flow Feeder

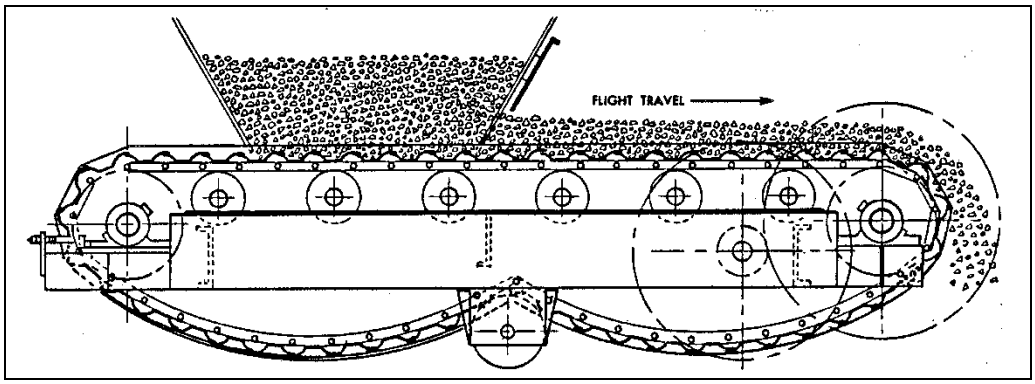

6.4 CALIBRATION OF COLD FEED BLEND RATIOS

The production and construction of a high quality asphalt pavement meeting the mix design requirements and with the required density begins with the cold feeders at the asphalt plant. The job mix formula is based on a mix design, which was developed based on a specific blend or ratio of coarse aggregate, fine aggregate, and RAP/RAS (when used) with individual specific gravities and gradations. During mix design, these materials are combined in such proportions that will result in a combination gradation and asphalt binder percentage that meets the design criteria for that particular type of mix. This blend ratio must be maintained during production if the design criteria are to remain valid. Excessive deviation from this blend may change the optimum asphalt binder percentage, result in a low stability mix, deficient or excessive air void content, a different mix specific gravity or other changes. It is for these reasons that the blend ratio shown on the job mix formula must be closely maintained at the asphalt plant.

The cold feeder aggregate blend ratio must be calibrated quarterly (at a minimum), and as deemed necessary by the QA Supervisor. While this calibration is the responsibility of the Contractor, the QA technician must be aware of the methods and procedures used and be able to check or verify the calibration. Approval of mix verification by the Division QA Supervisor will not be granted without satisfactory evidence of the cold feed blend calibration.

There are instances where the gradation of one or more of the individual aggregates and/or RAP/RAS may have significantly changed from that used in the initial mix design. This may make it impossible to meet the combined mix gradation if the blend ratio is still maintained. While it is usually best to maintain the blend ratio and adjust the gradation target values, there may be situations where it is better to change the aggregate blend ratio. This is especially true when two or more “same” source aggregates are being used. In these situations, QC personnel may make per aggregate cold feed blend changes of ±10% or less from the JMF target without prior QA approval. A cold feed blend change in excess of ±10% can only be authorized by the Asphalt Laboratory. In most cases, a blend change in excess of ±10% will cause a new mix design to be considered.

Calibration of the Cold Feeders can be done by various methods. Any method is satisfactory provided the blend ratio can be determined with reasonable accuracy. Reasonable accuracy is normally considered to be within ±5% of the JMF target for each aggregate and RAP/RAS components. This tolerance should not be confused with the allowable adjustments covered in Section 7.4. This ±5% tolerance is only for calibration evaluation purposes and is not applicable to allowable blend adjustments. Whichever method is used, aggregate and RAP/RAS samples must be actually weighed in order to determine the cold feed blend percentages. Some of the more commonly used methods of calibration are listed below:

- Pan Method: A pan or shallow container is passed beneath each operating feeder unit to obtain a sample of material that will be weighed and then converted to a percentage of the total aggregate weight (including RAP/RAS) being furnished.
- Length-of-Belt Method: A sample of each material being used (including RAP/RAS) is taken from a constant belt length, weighed, and then converted to a percentage of the total aggregate weight being furnished.
- Weigh Bridge Method: Each material being used (including RAP/RAS) is run across the aggregate weigh bridge and into a truck at a normal production rate for a fixed amount of time. Individual bin feed rates are then converted to a percentage of the total weight being furnished.
- Manufacturer's Method: Most manufacturers' plant manuals contain specific procedures for cold feed calibrations. These are acceptable methods, provided the aggregates are actually weighed in some manner during the process.

While these are some of the more commonly used calibration methods, there may be other acceptable methods. As mentioned before, any method is satisfactory provided the blend ratio can be accurately determined by actually weighing the aggregate or RAP/RAS samples. While acceptable accuracy is generally within ±5% of the JMF target for each aggregate and RAP/RAS component, the blend ratio at a drum mix plant probably needs to be maintained more accurately than this since there is no secondary screening unit as in a batch plant. Again, this tolerance is for blend calibration purposes only and is not applicable to allowable blend adjustments. The percentage of RAP/RAS shown on the JMF may not be adjusted except with the specific approval of the Asphalt Design Engineer. Figures 6-5 and 6-6 are examples of a length-of-belt method of calibration and a JMF comparison. While this is the example used in this manual, it in no way implies that this is a better or more accurate method than the others listed above.

Figure 6-5
Cold Feed Blend Calibration Example (Length-of-Belt Method)

Given a total of 50.0 lbs. of aggregate (A+B+C+D) taken from a cross-section of cold feed belt, determine the percentage of each aggregate being used:

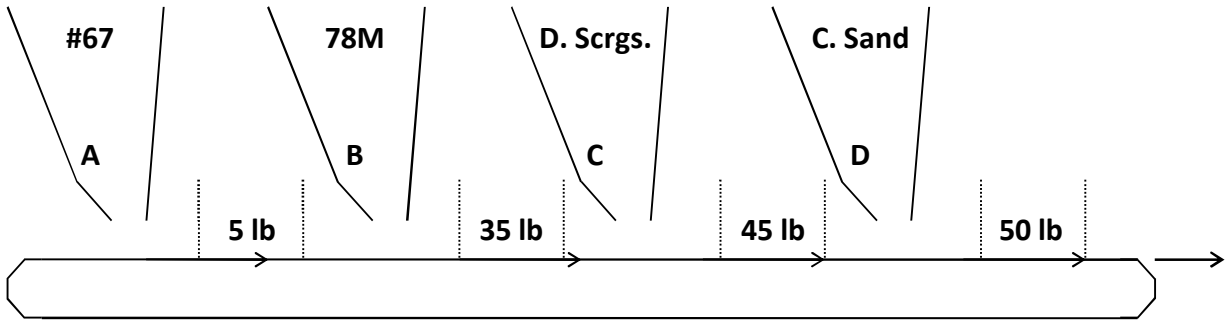

No. 67 Stone	=	5 - 0	=	5 lbs.	5	÷	50	=	10%
No. 78M Stone	=	35 - 5	=	30 lbs.	30	÷	50	=	60%
D. Scrgs	=	45 - 35	=	10 lbs.	10	÷	50	=	20%
C. Sand	=	50 - 45	=	5 lbs.	5	÷	50	=	10%
		Total	**=**	**50 lbs.**		**Total**		**=**	**100%**

Note: Sample across the entire Cross-section of belt for a minimum of two (2) feet.
Each section removed after each feeder must be the same length for all feeders.

Figure 6-6
NCDOT JMF – Compare Cold Feed Calibrations

Page 1 of 1
11/10/2009

North Carolina Department of Transportation

HOT MIX ASPHALT JOB MIX FORMULA (SUPERPAVE)

Contractor:	Quality Paving Co. Everywhere, NC	Material:	Asphalt Concrete Surface Course, Type RS 12.5C		
Plant Location:	Everywhere, NC	AMD:	08-119	JMF:	08-119-152
Plant ID:	AS205	Effective Date:	02/24/2009	(Approved)	
County:	Wake	Contract:		WBS:	

AGGREGATE SOURCES AND BLEND PERCENTAGES

APPROVED SUPPLIER	OTHER SUPPLIER	MATERIAL	BLEND %
		Coarse Aggregate, #78M	31.0
		Coarse Aggregate, #67	16.0
		Screenings	15.0
	Tidewater - Pensacola	Sand, Natural	23.0
	Stockpile	RAP Aggregate, Fine	15.0
		TOTAL	100.0

Compare Cold Feed Calibration results with JMF Blend Percentages

JMF COMBINED GRADATION

SIEVE SIZE % PASSING

Total Binder %: 5.3

Asphalt Binder Grade: PG 70 -22

6.5 BATCH PLANT OPERATIONS

6.5.1 The Dryer

The aggregates are delivered from the cold feeder to the dryer. The dryer accomplishes two things: (1) it removes moisture from the aggregates and (2) it raises the aggregate temperature to the desired level. The component parts of the dryer are: (1) a revolving cylinder usually from 3 to 10 feet in diameter and from 20 to 40 feet long; (2) a burner which is either gas or oiled fired; and (3) a fan, which may be considered part of the dust collector system, but its primary function is to provide the draft air for combustion in the dryer. The dryer is equipped with longitudinal troughs or channels, called lifting flights, which lift the aggregate and drop it in veils through the burner flame and hot gases.

The slope of the drum, its speed of rotation, diameter, length, and the arrangement and number of flights control the length of time required for the aggregate to pass through the dryer. The aggregate then passes to the hot elevator through a discharge chute near the burner end of the dryer.

The dryer will have an automatic burner control device with an approved thermometric instrument located in the aggregate discharge chute to actuate the automatic burner control. The purpose of the automatic burner control is to insure a uniform mix temperature and to prevent overheating of the aggregate, which can cause damage to the asphalt during mixing. Fluctuating mix temperatures often result in poor laydown and compaction results. Uniform density at the required degree of compaction cannot be achieved when the mix temperature varies from one batch or load to the next.

Figure 6-7
Dryer

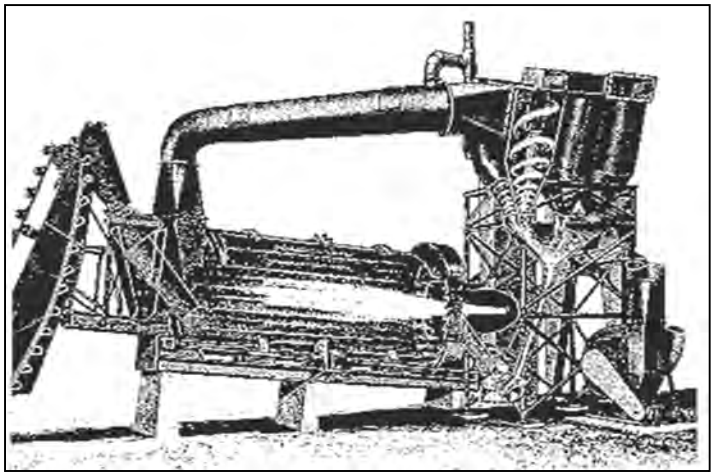

6.5.2 Screening Unit

The screening unit (see Fig. 6-8) includes a set of several different sized vibrating screens. The first in the series of screens is a scalping screen which rejects and carries off oversized aggregates. This is followed by one or two intermediate-sized screens, decreasing in size from top to bottom. At the bottom of the stack is a fine screen, occasionally referred to as a "sand" screen (see Figure 6-9). The screens serve to separate the aggregates into specific sizes. To perform this function properly, the total screen area must be large enough to handle the total amount of feed delivered. Here again, the screens must be clean and in good condition. The capacity of the screens must be in balance with the capacity of the dryer and the capacity of the pugmill. When too much material is fed to the screens or the screen openings are plugged, many particles, which should pass through, ride over the screens and drop into a bin designated for larger size particles. Similarly, when screens are worn or torn, resulting in enlarged openings and holes, oversized material will go into bins intended for smaller-sized aggregate. Any misdirection of a finer aggregate into a bin intended to contain the next larger size fraction is called "carry-over". Excessive carry-over can add to the amount of fine aggregate in the total mix, thus increasing the surface area to be covered with asphalt binder. If the amount of carry-over is unknown or if it fluctuates, particularly in the No. 2 bin, it can seriously affect the mix design in both gradation and asphalt binder content. Excessive carry-over can be detected by a sieve analysis of the contents of the individual hot bins and must be corrected immediately by cleaning the screens or reducing the quantity of material coming from the cold feed, or both. Some carry-over is to be expected and permitted in normal screening operations, provided it remains relatively uniform.

Figure 6-8
Screening Unit

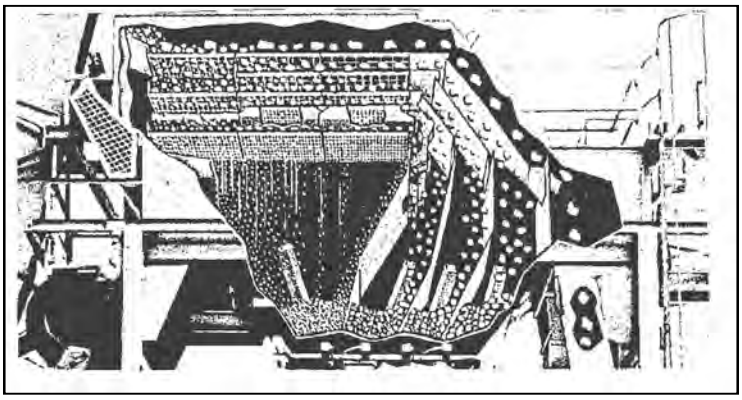

The No. 2 bin (intermediate fine aggregate) is the critical bin for carry-over. This is the bin that will receive the finest aggregate in carry-over and which will affect the asphalt binder demand of the mix the most. Typically, the carry-over in the No. 2 bin should not exceed 10 percent. Running a sample of the No. 2 bin material over a No. 8 (2.36mm) sieve will indicate the amount of carry-over. To prevent excessive carry-over, daily visual inspection of the screens for cleanliness and overall

condition is recommended, preferably before starting each day's operation. When conditions warrant, the screens shall be cleaned or replaced.

6.5.3 Hot Bins

Hot bins are used to temporarily store the heated and screened aggregates in the various sizes required. Each bin is an individual compartment or a segment of a larger compartment divided by partitions (see Fig. 6-9). Properly sized hot bin installation should be large enough to hold sufficient material of each size when the mixer is operating at full capacity. The bin partitions must be tight, free from holes, and high enough to prevent intermingling of the aggregates. Each hot bin shall be equipped with an overflow pipe to prevent aggregate from backing up into other bins. The overflow pipes shall be checked frequently to make sure they are functioning and thus prevent contamination by intermingling sizes from adjacent bins. The bottom of each bin is fitted with a discharge gate which shall close tightly so that no material is allowed to leak into the weigh hopper.

All hot bins are to be equipped with a device to permit sampling of the aggregate from each bin. Samples of aggregates from these bins may be taken from "gates" or "windows" in the sides of the bins, or by diverting the flow of aggregates from the bins into the sampling container. It is essential that the sampling devices or methods be such that representative samples of the materials in the hot bins can be obtained. Gradations of the samples from the different bins will then be analyzed to determine the hot bin pulls, as discussed later.

Figure 6-9
Typical Batch Plant Setup for Screens and Hot Bins

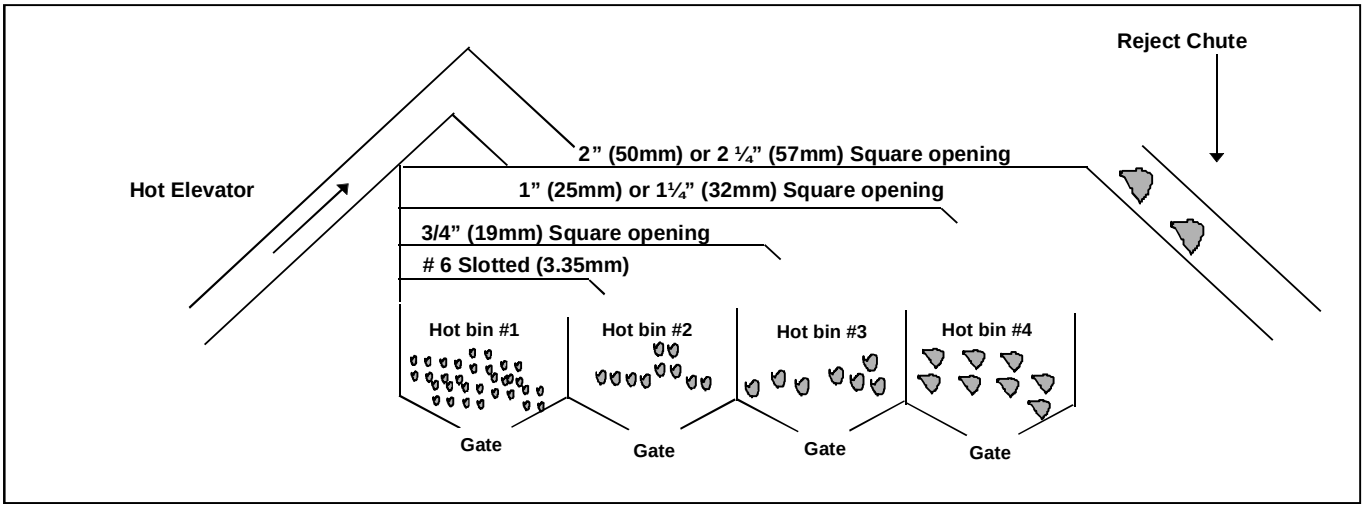

6.5.4 Aggregate Weigh Hopper

Aggregates are released from the hot bins directly into the weigh hopper, generally beginning with the largest size aggregate and progressing down to the finest size, where the mineral filler usually is used, sandwiched between the larger aggregates. The amount from each bin is determined by the batch size and the proportions or percentages required to be blended. Determination of hot bin percentages and hot bin pull weights will be discussed later in this section.

The weigh hopper is suspended from a scale beam and the amounts of aggregate are weighed cumulatively. Before withdrawal starts, there should always be sufficient materials in the hot bins for a complete batch. If a bin is near depletion or is running over, chances are that an adjustment in the cold feed rates or hot bin pulls are required.

6.5.5 Asphalt Binder Bucket or Meter

Asphalt binder may be weighed in a special bucket, or it may be measured by a meter for each batch. When weighed into a batch, asphalt binder is pumped into a bucket of known weight and weighed on a scale.

When metering devices are used, a volumetric measurement is made. The volume of asphalt binder changes with temperature. Some asphalt binder meters have built-in temperature-compensating devices that correct the flow of asphalt binder when changes in temperature occur. The volume of asphalt binder pumped between two meter readings may be weighed as a means of calibrating the meter.

6.5.6 The Mixer Unit (Pugmill)

After proportioning, the aggregate and binder are introduced into the pugmill for mixing. Batch plants are equipped with a pugmill mixer, which consists of twin shafts equipped with paddles for mixing the ingredients into a homogeneous mass (see Fig. 6-10). Main parts are: the paddle tips, paddle shanks, spray bar, liners, shafts, discharge gate and heated jacket. Efficient mixing is dependent upon the number, shape, and condition of the paddle tips, speed of the mixing shafts, length of mixing time, temperature of the material, quantity of materials in the mixer, and specifically the clearance between the paddle tips and liner plates. **NCDOT Specifications require that all batch plants shall have a mixer with a rated capacity of not less than 3,000 lbs.**

Close attention should be given, through visual inspection, to the uniformity and coating of the mix. Excessive clearance between paddle tips and mixer liners, broken, worn or missing paddle tips and the batch size are factors which can contribute to a lack of uniformity and coating of the mixture. Batch sizes should be determined by the rated capacity of the mixer. The rated capacity of the pugmill mixer will be indicated on the plant certification. Underfilling or overfilling should not be allowed. The mixers of batch mix plants and continuous mix plants are essentially of the same design, except for the variations in arrangement of the paddle tips. In the batch-mix mixer, the materials are dumped into the center of the mixer and the paddles are arranged to give an end-to-center mixing or a run-around ("figure-eight") mixing pattern. The material is held in the mixer the required mixing time and then discharged through the discharge gate into the transporting vehicles. Specifications require that the mixer be equipped with an automatic timing device to automatically regulate the dry-mixing and wet-mixing periods.

Figure 6-10
Pugmill Mixer for a Batch Plant

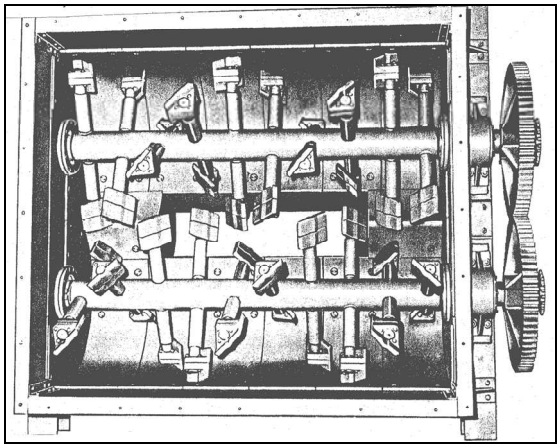

6.5.7 Automatic Control of Proportioning and Mixing

NCDOT Specifications require that all plants have fully automated controls for proportioning and mixing. A fully automatic system is defined as one such that once mix proportions and timers are set and the plant operation is started, it will automatically complete the proportioning and mixing cycle without further effort of the plant operator or until a shortage of material or some extraordinary event causes the plant itself to halt the operation.

The mixer must be equipped with an interlocking timing device, capable of being set at intervals of five seconds or less, to control the operations during the mixing cycle. The mixing time will be established by the plant operator or the QC technician. The mixing time should be long enough to get a uniform distribution of aggregate sizes and a uniform coating of asphalt binder on all aggregate particles; however, excessive mixing should not occur due to the hardening effect of the asphalt binder film on the aggregate by exposure to air and heat.

The Specifications also provide that **upon a malfunction** of the required automatic equipment on a batch plant, the **plant may continue to operate manually for the following two (2) consecutive working days**. It is the intention of this specification that the automatic equipment be operated at all times, except in situations where legitimate breakdowns occur. The Contractor must make every effort to repair any breakdowns of automatic controls immediately.

6.5.8 Calibration of Batch Plant Asphalt Scales, Weigh Bridges, and Meters

Before these calibrations are performed, the Contractor must give the appropriate Division QA Supervisor at least two days' notice to allow the QA Supervisor an opportunity to observe these calibration procedures. A certified Level I or Level II plant technician shall be present during this calibration. A Level II Technician signs the QC-2 Form certifying the accuracy of the scales check when completed. Separate sets of scales are used to weigh asphalt binder, aggregates, RAP and

RAS (if applicable), being used in the mix. The Contractor is required to check the calibration of these aggregate scales, asphalt binder scales, and weigh bridges (recycled mixes), on a periodic basis. The frequency for performing these scale checks is quarterly for the asphalt binder scales, aggregate scales, and weigh bridges. For this frequency, **quarterly** is defined as once within each calendar quarter not to exceed 90 days apart. All plant scales shall be accurate to 0.5 percent of the anticipated scale settings that may be required. The Contractor shall have on hand not less than ten 50 lb. weights for testing the plant scales. The procedures and documentation of this calibration are described below:

(A) AGGREGATE SCALES & WEIGH BRIDGES (**Quarterly** Frequency):

The aggregate scales are checked as follows: Scales are first checked with the weigh hopper empty to be sure they show zero. Then ten 50 lb. standard weights are either placed on or attached to the aggregate weigh hopper and the scales reading is read and recorded. This will be the increment check. Care should be taken in evenly distributing these weights in order to prevent scale misalignment. The weights are then removed and the same amount of aggregate is drawn from the hot bins and deposited into the weigh hopper to replace the standard weights. The ten weights are again placed on or attached to the weigh hopper and another scale's reading is taken and recorded. This would be the 1000 lb. increment check. This procedure is repeated at 500 lb. intervals until the total weight checked is slightly more than the pounds of aggregate that will be used in each batch of mix. At anticipated scale settings, the scales must be within 0.5 % accuracy. If not, it is the Contractor's responsibility to make the necessary adjustments or have scales repaired by a qualified scales technician. A recheck of the scales would then be made to ensure their accuracy.

During normal operations, aggregate scales should be monitored to be sure they zero correctly during weighing operations and that they show no signs of binding or dragging which would cause erroneous readings. Some common causes of scale malfunction are: build-up of asphalt binder, dust, corrosion or dulling of the scales' knife edges, or aggregates lodging in the scale supports. Belt scales (weigh bridges) are utilized at some batch plants to monitor the RAP material percentage used in recycled mixes. When used, these belt scales will be checked quarterly using the same procedure for checking belt scales on a drum mix plant (See Section 6.6.3 for this procedure).

(B) ASPHALT BINDER SCALES (**Quarterly** Frequency):

The asphalt binder scales are calibrated in nearly the same manner as the aggregate scales, but only one weighing operation is required. The 50 lb. standard weights are placed on or attached to the asphalt binder bucket one at a time, and readings are recorded as each weight is added. This is continued until the combined weight is slightly in excess of the pounds (kilograms) of asphalt binder required per batch of paving mixture. Asphalt binder scales, if in true adjustment, should indicate the same value as the total of the standard weights used, and must be within the required 0.5 % accuracy at the anticipated scale setting. If the weighing scales error exceeds the tolerance permitted by specifications, plant operations should not be started until the scales are adjusted or repaired by a qualified scale technician. This corrective measure is the Contractor's responsibility. During normal operations, the tare weight of the empty bucket should be watched carefully to see that the bucket is drained completely and to compensate for any asphalt binder and dust clinging to it. The asphalt binder bucket should be tarred at the beginning of each day and checked after the first few loads are discharged. Quite often, asphalt binder accumulates on the side and bottom and reduces the weight of asphalt binder actually used in the mix.

(C) ASPHALT BINDER METERS (**Quarterly** Frequency):

Asphalt binder meters are volume displacement mechanisms, and when used they should be checked for accuracy. This check should be performed quarterly at a minimum. The metering system should also be within 0.5 % accuracy. Since asphalt binder content is usually expressed as a percent by weight, a correlation between meter readings and weight should be established. A simple method to determine the correlation is to read the meter, pump a quantity of asphalt binder into a tarred container, and then read the meter again. The weight of asphalt binder divided by the difference in meter readings determines the weight of asphalt binder pumped per division. For a more detailed explanation of checking an asphalt binder metering system, see Section 6.6. The viscosity and unit weight of the asphalt binder change with a change in temperature. When the temperature is increased the viscosity decreases. The unit weight decreases about 1 % for each increment of increase in temperature of 28° F. Pumping efficiency may be affected by a change in temperature, and it may be desirable to calibrate the pump over a range of asphalt binder temperatures. Volumes and viscosities can be determined later for calibration

and plotting purposes if necessary. Some asphalt binder meters have built-in temperature-compensating devices that correct the flow of asphalt binder when temperature changes occur. When a meter without a temperature-compensating device is used, it is necessary to adjust the delivery setting for each change in asphalt binder temperature. The technician should refer to the plant manual for additional details.

(D) ANTI-STRIP METER SYSTEM (**Quarterly** Frequency):

If the anti-strip additive is introduced into the binder at the plant site, a calibration flowmeter is mounted in the anti-strip additive feed line near the additive storage tank. This meter is to insure that the additive pump is operating properly and the correct amount of additive is being uniformly introduced into the binder at all times. The metering device will be interlocked with the asphalt binder control equipment in such a manner as to automatically vary the additive feed rate to maintain the required proportions and which will automatically indicate in the plant control room when the additive feed rate is obstructed or stops. This meter should be checked for accuracy at least quarterly at both batch and drum plants and should be within ±10% of the amount of additive specified on the JMF.

NOTE: This calibration flowmeter should not be confused with the Totalizer Flowmeter that is also required on the additive feed line if additive is introduced to the binder at the plant. See Section 5.7 for details on the requirements for the totalizer flowmeter.

Since the additive is introduced at minor dosages, it is adequate to pump off only a small quantity to check the meter. The procedure is as follows: Check and record the current meter reading. Pump off 4-5 gallons of additive (based on the meter reading) through the by-pass valve into a tared container. Determine the additive weight by weighing contents of tared container on scales accurate to at least the nearest pound. Calculate the actual gallons pumped off by dividing this weight by the pounds per gallon weight of the additive. The pounds per gallon weight is determined by multiplying 8.33 times the specific gravity of the additive. The specific gravity of the additive can normally be found on the additive delivery ticket or by contacting the supplier. The gallons shown to have been pumped off by the meter reading should be within ±10% of the actual gallons. If not, the meter must be adjusted and this procedure repeated until the required tolerance is met.

(E) DOCUMENTATION:

A plant scales calibration Form QC-2 (see Section 12) and/or certification by the Department of Agriculture or a certified scale company will suffice for either the initial check or for a periodic check, provided the date of the certification is within the time frame noted above for asphalt binder, aggregate scales and weigh bridges. A single scales check may and should serve for several different projects if the check was conducted within the above noted time. Form QC-2 (see Section 12) should be submitted to the Division QA Supervisor at the completion of each scales check. As noted, the QC Technician should post a copy of Form QC-2 in the QC Laboratory when the scales are actually calibrated. A copy shall also be furnished to the appropriate Division QA Supervisor.

6.5.9 Setting of Batch Weights

Normally it is the Contractor's responsibility to calibrate the hot bins; however, the QA Technician should observe and be aware of the procedures used to arrive at an aggregate combination that meets the job-mix formula. To produce the desired asphalt mix; it is necessary to pull a certain amount of aggregate from each hot bin. The amount that is pulled from each bin is dependent upon what the Job Mix Formula calls for and what each hot bin contains (the gradation); which means the content of each bin must be analyzed.

The first step is to start running the plant, the cold feed, the dryer and the screens. After the plant has settled down so that the material in the bins is representative of the proportions established at the cold gates, a sample of aggregate is taken from each bin.

(A) HOT BIN SAMPLING:

This method describes a procedure for obtaining representative aggregate samples from the asphalt plant hot bins. An approved sampling device is used that will retain a representative sample of aggregates when passed through a veil of material flowing out of the bin chute. The device must be of a dimension so that it will extend slightly more than the distance from the outside edge of the predominantly fine material to the outside edge of the predominantly coarse material as the device enters the stream of flowing aggregates. A shovel is not acceptable.

In the flow of material over the plant screens, finer particles fall to the near side of the bins and coarser particles fall to the far side, particularly in the No. 1 bins (See Fig. 6-11). When material is drawn from the bin by opening a gate at the bottom, the stream consists predominantly of fine material at one edge and coarse material at the other. This condition is critical in the No. 1 (fine) bin, since the asphalt binder demand is influenced heavily by the material from this bin. Therefore, the relative position of the sampling device in the stream determines whether the sample will be composed of the fine portion, the coarse portion, or will be an accurate representation of the total material in the bin (see Fig. 6-11). Each compartment shall be equipped with adequate and convenient devices to provide for sampling. This means that the plant must be constructed to either (a) enable a sampling device to be inserted and used effectively, (b) to have an approved gate, window or slide under each bin for diverting the flow of aggregates from the bins into the sampling device, or (c) to contain an automatic bin sampling device.

Figure 6-11
Segregation of Aggregates in Hot Bins (Note Segregation Inside Each Bin)

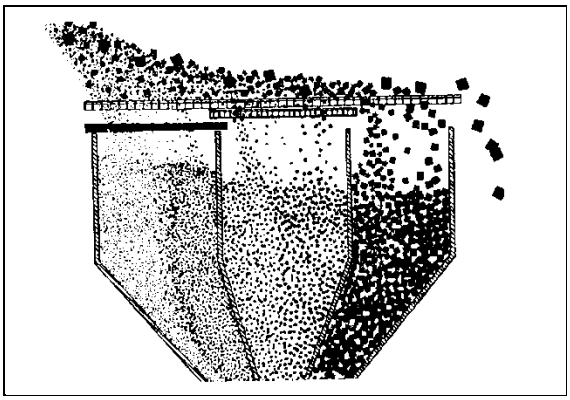

The sampling procedure is as follows: Verify that the containers and sampling device are clean. Pass the sampling device through the veil of material as it flows from the bin. The sampling device must be inserted under the stream of material in such a way that the device simultaneously collects the predominantly fine material at the other edge (see Fig. 6-12). The sampling device will be withdrawn before it overflows and the contents deposited in a clean container. This procedure will be repeated for each bin to be analyzed.

Figure 6-12
Correct Use of Sampling Device

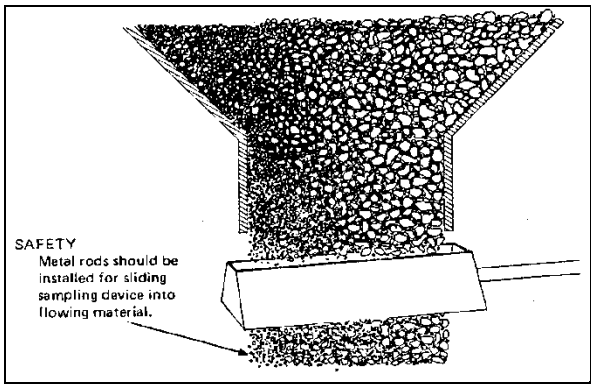

(B) <u>SIEVE ANALYSIS OF EACH BIN:</u>

A sieve analysis will be run on each sample taken from the hot bins. This is done as soon as the samples cool down to the point they can be handled. The equipment and test procedures are those specified for running sieve analysis of coarse and fine aggregates according to NCDOT-T-27. The information is recorded on the standard form B-75-2 (see Fig. 6-13).

(C) DETERMINING HOT BIN PERCENTAGES:

Once the gradation of material in each hot bin is determined, the percentage to be pulled from each bin to meet the job mix formula gradation can be calculated. This is best done by use of a trial and error method. In determining proper calibration of the hot-bin feeds, the job-mix formula is the starting point. It is necessary to determine what percentage of each size of the aggregate in the hot bin should be incorporated into the mix in order to meet the job mix formula gradation requirements. It should be stressed that there can be numerous sets of hot bin pull percentages that are correct. Any combination of bin materials that will meet the job mix formula gradations, with the Specification tolerances applied will be acceptable and satisfactory. The purpose of this trial and error Form B-75-2 procedure is to arrive at a starting point for plant production to ensure that the mix will be reasonably close to our job mix formula.

First the gradation of material in each of the hot bins is determined. Aggregate proportions are then estimated as follows. (Reference should be made to Fig. 6-13 to work through this estimation process). The raw material passing the 2.36 mm sieve and the 0.075 mm sieve is used as a starting point. Of the three hot bins used for this S12.5 C mix, bin No. 1 carries most of the minus 2.36 mm and minus 0.075 mm material. This will generally be true in all batch plants since the screen over the No. 1 bin is of such size to normally control the mix gradation from the 2.36 mm sieve down through the 0.075 mm sieve. This being the case, the 2.36 mm sieve through 0.075 mm sieve gradations in the asphalt mix can be controlled by the percentage of material pulled from the No. 1 hot bin.

Beginning with the 2.36 mm, the job mix formula requires that 52% pass this sieve. Note that there is 93 % passing the 2.36 mm sieve in hot bin No. 1. Since this 93 % represents the majority of minus 2.36mm material in all three hot bins, the 52 % required in the mix can be controlled from this 93 %. The 52 is divided by the 93 for a percentage result of 56 % that is to be pulled from the No. 1 bin. In other words, what percent of the No. 1 bin minus 2.36 mm material is needed to give the desired percent passing the 2.36 mm on the job mix formula. The 0.075 mm sieve is now checked in the same manner, as was the 2.36 mm above. The job mix formula requires that 4.8 % pass the 0.075 mm sieve. The No. 1 bin has 8.9 % minus 0.075 mm material. The 4.8 is divided by the 8.9 for a result of 54 %. Either the 56 % (arrived at by use of 2.36 mm) or the 54 % (arrived at by use of 0.075 mm) will meet the job mix formula requirements. The example in Figure 6-14 uses 55 % out of hot bin No. 1.

As the hot bin containing the finest graded material had certain characteristics that enabled us to control certain portions of our mix gradation, so does the hot bin containing the coarsest graded material. This characteristic is different, or opposite, from that in the fine bin in that this is large stone, which is generally retained on the majority of sieves instead of passing most sieves. This retainage characteristic is used to estimate the percentage to be pulled from the bin containing the coarsest material.

The example in Figure 6-13 uses three hot bins to make this S12.5 C mix, with No. 3 bin containing the coarsest graded material. (The hot bin farthest to the right from the plant's hot elevator will always contain the coarsest material.) Keep in mind that the No. 1 hot bin is already set at 55 % which controls the 2.36 mm through 0.075 mm sieves; therefore, we need not be concerned about these sieves any more. The concern now is for the sieves above, or larger than, the 2.36 mm.

In order to select a controlling sieve which determines the amount to pull out of the No. 3 bin, the gradation for all sieves above the 2.36 mm in all three bins need to be compared. The first sieve above the 2.36 mm that differs drastically in gradation, from that same sieve's gradation in the Nos. 1 and 2 bins, will be the controlling sieve. The 4.75 mm is the first sieve above the 2.36 mm. The 4.75 mm gradation is 98% in the No. 1 bin, 89% in the No. 2 bin, and 13.6% in the No. 3 bin. The 4.75 mm sieve gradation is very much different in bin No. 3 from that in Bin Nos. 1 and 2; therefore, this will be our controlling sieve. These gradations show that there is basically no plus 4.75 mm material in bin Nos. 1 and 2, with bin No. 3 containing 86.4% plus 4.75 mm; therefore, bin No. 3 is the only bin from which the plus 4.75 mm material in the mix can be controlled. The job mix formula requires that 70 % pass the 4.75 mm sieve, which means that 30 % would be retained on that sieve. Since the No. 3 bin is basically the only hot bin with plus 4.75 mm material, 30 % would be pulled from this bin in order to have 30 % plus 4.75 mm in the mix.

The remaining bin (No. 2 in our example) will be set at the difference between 100 % and the total percent of bin Nos. 1 and 2. This would be 100 minus 85 (55 plus 30) or 15 % to be pulled out of the No. 2 bin. At times only two hot bins will be used. In those cases, the No. 1 hot bin will be set as outlined previously and the balance percentage will be pulled from the No. 2 bin. Also, there will be times when four hot bins will be used for 19.0 mm and 25.0 mm mixes. In these cases, the Nos. 1 and 4 hot bins will be set as previously outlined and the balance percentage should be split 1/3 out of the No. 2 bin and 2/3 of

the balance out of the No. 3 bin. This 1/3:2/3 split comes from experience and has proven to normally meet the job mix formula needs.

After deciding on a set of hot bin percentages, it is necessary to verify that these percentages will meet the job mix formula requirements. This is done by blending the hot bin materials together, on paper, at the percentages decided upon. Following this procedure through in our example, it will be seen that the 55-15-30 percent combination of hot bin materials will produce a mix gradation that is very close to the job mix formula.

Figure 6-13
Aggregate Blending Worksheet (Form B-75-2)

Form B-75-2

Aggregate Blending Worksheet

Project Number **8.11223344** Hot Bin **X** Stockpile _____ Date **5/27/2004** Time **12:30**
County _____ Cold Feed _____ Other _____ Contractor **Quality Asphalt Paving Co.**
Type Mix **S 12.5 C** JMF No. **04-004-141** Plant Location **Everywhere NC.**

Material													Rap	M.F.	Combination						Gradation	
Source	Hot Bin 1			Hot Bin 2			Hot Bin 3						Rap Bin		of Materials							
Sample Wt.															Hot Bin, Stockpile							
Dry Wt.	850.0			1103.0			1215.0								or Cold Feed							
% Moist.															1	2	3	4	Rap	M.F.	**Blend**	**JMF**
	Acc. Wt.	% Ret.	% Pass	Acc. Wt.	% Ret.	% Pass	Acc. Wt.	% Ret.	% Pass	Acc. Wt.	% Ret.	% Pass	% Pass		%	%	%	%	%	%		
Sieve Size															**55.0**	**15.0**	**30.0**				100.0	
50.0 mm			100.0			100.0			100.0						55.0	15.0	30.0				100	100
37.5 mm			100.0			100.0			100.0						55.0	15.0	30.0				100	100
25.0 mm			100.0			100.0			100.0						55.0	15.0	30.0				100	100
19.0 mm			100.0			100.0			100.0						55.0	15.0	30.0				100	100
12.5 mm			100.0			100.0	142.0	11.7	88.3						55.0	15.0	26.5				96	95
9.50 mm			100.0			100.0	440.0	36.2	63.8						55.0	15.0	19.1				89	89
4.75 mm	18.0	2.0	98.0	125.0	11.3	88.7	1050.0	86.4	13.6						53.9	13.3	4.1				71	70
2.36 mm	59.5	7.0	93.0	960.0	87.0	13.0	1200.0	98.8	1.2						51.2	1.9	0.4				53	52
1.18 mm	290.0	34.1	65.9	1030.0	93.4	6.6	1205.0	99.2	0.8						36.2	1.0	0.2				37	37
0.600 mm	425.0	50.0	50.0	1090.0	98.8	1.2	1208.0	99.4	0.6						27.5	0.2	0.2				28	28
0.300 mm	540.0	63.5	36.5	1092.0	99.0	1.0	1213.0	99.8	0.2						20.1	0.1	0.0				20	20
0.150 mm	700.0	82.4	17.6	1100.0	99.7	0.3	1213.0	99.8	0.2						9.7	0.0	0.0				10	10
0.075 mm	774.0	91.1	8.9	1101.0	99.8	0.2	1214.0	99.9	0.1						4.9	0.03	0.02				5.0	4.8
Pan	850.0			1130.0			1215.0															

Total Moisture Blend: _____

Test Performed by: *I. B. De Man*

(D) CALCULATING BATCH WEIGHTS

After determining the proportions required for each hot bin, we can calculate the weight of asphalt binder and the amount of aggregate to be pulled from each bin to produce a single batch of asphalt mix. First, we select a batch size, which will be mainly dependent upon the pugmill capacity of the asphalt plant. Assume that we have a 4,000 lbs. capacity pugmill.

Summarize the information we have available:

Batch size:	4,000 lbs.
% Binder:	5.8% (given on JMF)
Bin #1 (% to be pulled):	55%
Bin #2 (% to be pulled):	15%
Bin #3 (% to be pulled):	30%

← **From Trial and Error Method in Section 6.5.9(C)**

From this information, the weight of asphalt binder in each batch can be calculated by multiplying the batch weight by the percentage of asphalt binder in each batch: 4000 lbs. x 0.058 (5.8%)= 232 lbs.

The total weight of aggregates in each batch is determined by subtracting the weight of the asphalt binder from the total batch weight: 4000 lbs. – 232 lbs. = 3768 lbs.

Knowing the total weight of all aggregates needed for a batch of asphalt mix, along with the estimated hot bin percentages, allows calculation of the weights of aggregate to be pulled from the bins. This calculation is shown below.

Bin No.	Proportion Percent		Aggregate Weight (lbs)		Required Weight (lbs)
1	55 %	X	3768	=	2073
2	15 %	X	3768	=	565
3	30 %	X	3768	=	1130
		Total Aggregate Weight		=	3768

(E) SETTING THE BATCH WEIGHTS

(1) AGGREGATE SCALES:

From the hot bins the aggregates are withdrawn for deposit into a weigh hopper. The weigh hopper is suspended from scale beams and weighs accumulatively the amounts of aggregate entering it (see Fig. 6-14).

Figure 6-14
How Cumulative Scale Settings Are Used To Control Material Amounts Pulled From Hot Bins

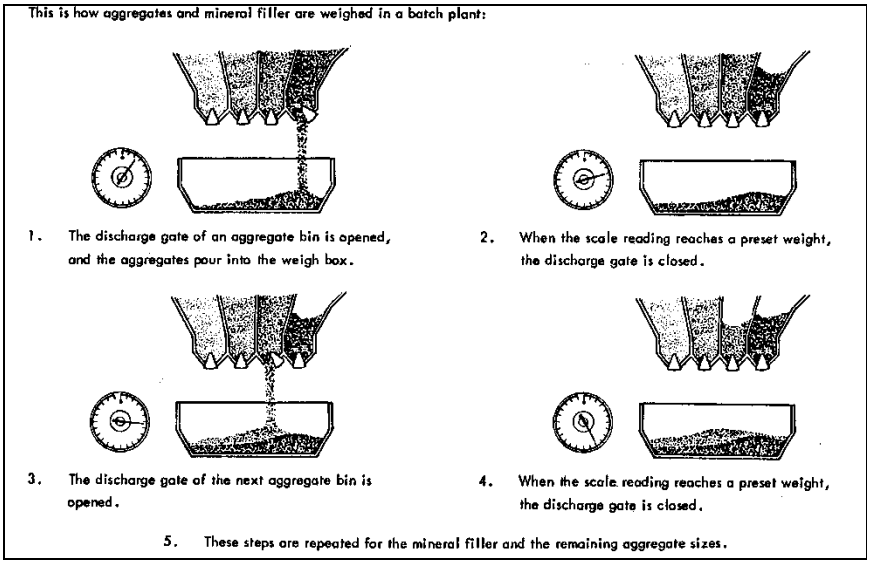

The weights to be pulled should be arranged in the order best suited for the plant. The Contractor or Producer will select the sequence of loading the weigh hopper. In most plants, the coarse aggregate is drawn first, so that the fine aggregate will not leak through the weigh hopper gate. Once the bin order has been determined, the bin weights are set accumulatively on the aggregate scale dial. The scale settings are established as follows:

Bin No.	Bin Order	Required Weight (lbs)	Accumulative Scale Setting (lbs)
1	1	2073	2073
2	2	565	2638
3	3	1130	3768

These settings should be marked on the scale and used until adjustments are required (see Fig. 6-15).

Bin Batch Sequence 1, 2, 3:

Hot Bin #1	=		2073 lbs.		
Hot Bin #2	=	**Hot Bin #1**	2073 lbs.	+	
		Hot Bin #2	565 lbs.	=	***2637 lbs.***
Hot Bin #3	=	**Hot Bin #1**	2073 lbs.	+	
		Hot Bin #2	565 lbs.	+	
		Hot Bin #3	1130 lbs.	=	***3768 lbs.***

Figure 6-15
Asphalt Plant Scale Settings

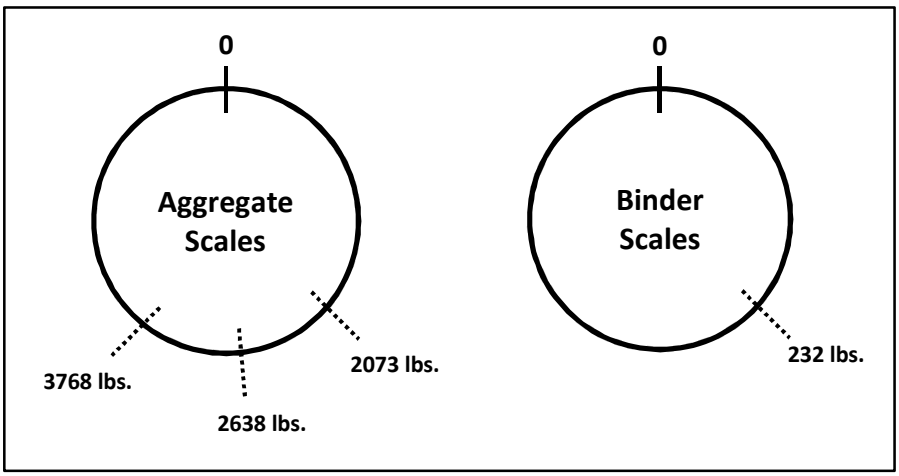

(2) ASPHALT BINDER SCALES:
From the weigh hopper, the aggregates are deposited into the plant's pugmill (mixing chamber), where they are blended with the proper proportion of asphalt binder. In a typical plant system, asphalt binder is weighed separately in a weigh bucket before being introduced into the pugmill (see Fig. 6-16). This weight is set on a separate asphalt binder scale from the aggregate scales. From the previous computations, our asphalt binder scales setting would be 232 lbs. (see Fig. 6-15).

Figure 6-16
Typical Asphalt Binder Measuring and Delivery System

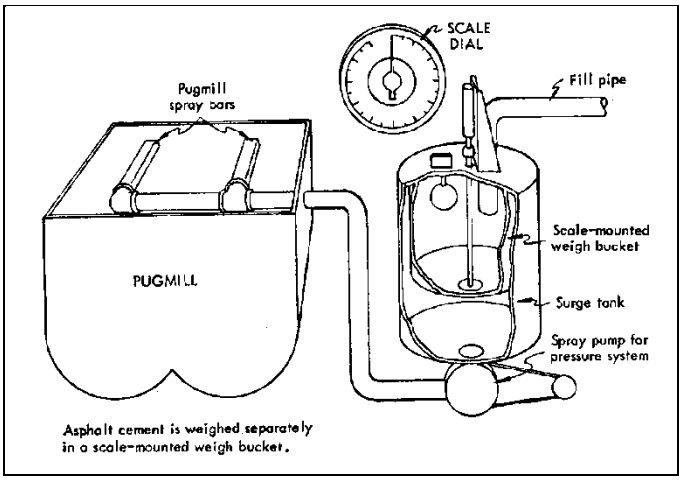

(3) AUTOMATIC PLANTS:
The batch weights for the mix are normally set on the control panel of an automatic plant by various formula setting devices. The three methods used on most automatic plants are as follows:

(a) Preset Dial Type: Each dial is set to the individual weight to be pulled from the corresponding hot bin. A separate dial is also used for the asphalt binder.

(b) Batch Plug: A batch plug consists of several potentiometers; each set for the individual component weight and enclosed in a case about half the size of a cigarette pack. A number of these can be stored at the plant for various mixes.

(c) Central Processor Unit: Computer System capable of storing different mix types, printing batch weights and controlling most plant operations.

6.6 DRUM MIX PLANT OPERATIONS

Drum mixing is a relatively simple process of producing asphalt mix. The mixing drum from which this type of plant gets its name is very similar in appearance to a batch plant dryer drum. The difference between drum-mix plants and batch plants is that, in most drum-mix plants the aggregate is not only dried and heated within the drum, but also mixed with the asphalt binder. However, there are some more recent model drum mix plants that introduce the asphalt binder outside the drum. The addition of a coater box, which is a pugmill type device, located at the discharge end of the drum allows the asphalt binder to be added into the coater box instead of into the drum. Still other "double barrel" type drum mix plants will add the asphalt binder between an inner and outer drum. The basic concept of all these types is the same though -- a continuous mixing process as compared to the mixing of batches at batch plants. There are no gradation screens, hot bins, weigh hoppers or pugmills in a drum-mix plant. Aggregate gradation is controlled at the cold feed.

6.6.1 Cold Feed System

Since the drum mix plant does not incorporate a gradation screening unit, the aggregate must be accurately proportioned prior to entry into the mixing drum. Mix gradation and uniformity are entirely dependent on the cold-feed system. The plant must be equipped with provisions to conveniently obtain representative samples of the full flow of material from each cold feed and the total cold feed for calibration purposes. Calibration of the cold feeds to determine compliance with the job mix formula is essentially the same as for batch plants. The technician should refer to Section 6.4 for these procedures and frequency of calibration.

Each feeder shall be equipped with an automatic device which activates a warning alarm and/or flasher light when any bin becomes empty or when aggregate flow becomes restricted. The automatic device shall be interlocked into the plant control system so as to automatically stop production if normal aggregate flow is not resumed within 60 seconds. Each feeding system shall be so constructed that samples can be readily obtained.

6.6.2 Vibratory Scalping Screen

A vibratory screening system capable of removing all oversize materials for the particular mix being produced shall be provided prior to entry of the aggregate into the dryer-drum mixer. Normally, a screen size just slightly larger than the maximum aggregate size for the type mix being produced is satisfactory. It is also desirable that the scalping screen unit be located just after the material leaves the cold feed bins and prior to the material passing over the weigh bridge of the aggregate weighing system. This serves to uniformly distribute the material on the belt and results in less fluctuation of the aggregate feed rate data being conveyed to the plant control blending system.

6.6.3 Weight Measurement of Aggregate and RAP/RAS (Quarterly Calibration)

Before calibrating the weight measurement of either the aggregate or RAP/RAS (when used), the Contractor must give the appropriate division QA Supervisor at least two days' notice to allow the QA supervisor an opportunity to observe this calibration. Drum-mix plants require a continuous weighing system on the cold feed conveyor belts (including RAP/RAS conveyor belts). In-line belt weighing devices, also called weigh bridges (Fig. 6-17) are continuous belt-weighing devices used for this purpose. Combined aggregates or RAP/RAS passing over the conveyor belt are continuously weighed and a readout (in the control room) indicates the weight of the flow over the scale at any given instant. No material should ever be diverted from the conveyor belt after it passes the belt weigh bridge during actual production.

Figure 6-17 shows one of the conveyor idlers (designated the weigh idler) of the belt weigh bridge which is mounted on a pivoted scale carriage. As the loaded belt passes over this idler, the weight is read in tons and/or tons per hour and a reading displayed at the control console in the control trailer. This reading is normally corrected to account for moisture in the aggregate (since dry-aggregate data is used to establish the required percentage of asphalt binder) and is a key reading in monitoring plant operations. The in-line belt weigh bridge is usually located midway between the head and tail pulley of the cold feed belt conveyor. This location tends to lessen variations in reading caused by impact loading, roll-back of aggregate or changes in belt tension. A quarterly check of this device should be performed to ensure this accuracy. For this frequency, quarterly is defined as once within each calendar quarter not to exceed 90 days apart. The device must be accurate within ±0.5 % at normal production rate.

Figure 6-17
Weigh Bridge

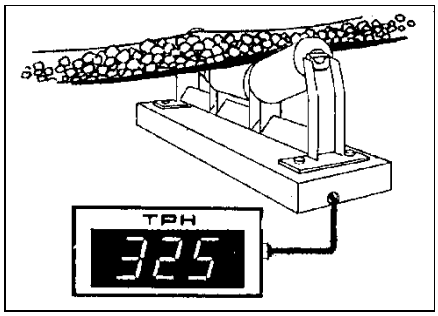

There are several various methods for checking these weigh bridges. Any method that will verify that the actual weight passing across the weigh bridge as compared to the plant's digital readout will be satisfactory. Some of these methods are briefly described next. These methods apply to and are acceptable for either virgin aggregate weigh bridges or RAP/RAS weigh bridges. Before running either method, it is suggested that at least 4 tons of one size aggregate be passed over the cold feed conveyor belt and into a truck by means of a diversion chute. This quantity can then be dumped back onto the stockpile. This precaution insures proper seating of the conveyor belt on the rollers and insures better accuracy. If this precaution is not taken, the first test may give misleading results.

If the plant controls are equipped with a readout that gives actual weight (tons, not tons per hour) crossing the weigh bridge, this check is as follows. First, set the plant's moisture compensator to zero and then zero out the belt scales. Next, run approximately 15 tons of clean coarse aggregate for aggregate weigh bridges or a minimum of 10 tons for RAP and RAS weigh bridges across the appropriate weigh bridge at normal production rate, and check the readout weight by use of a certified set of scales. A coarse aggregate is preferable due to less chance of loss of fines during the weighing process, less moisture in the material, and ease of handling as compared to finer materials. Means should be provided for diverting the aggregate into trucks, or other containers. This is normally done by use of a diversion chute located at the end of the cold feed conveyor belt. The quantity of test material will be run across the weigh bridge, through this diversion chute into a container, and then weighed on an approved set of scales. The net weight will then be determined by subtracting the

container weight from this gross weight. This net weight is then compared with the weight reading displayed in the plant control console. The readout should compare within ± 0.5% of this net weight.

The plant may be equipped with a weigh bridge digital readout that only gives a rate in tons per hour. In this case, the above procedure can generally be used but the actual weight will be converted to tons per hour. When making these checks, it is very important that the plant be operated at normal production rate and this rate be uniformly maintained during the test. As above, approximately 15 tons of clean coarse aggregate for virgin aggregate bins or 10 tons for RAP or RAS bins will be run across the weigh bridge, through a diversion chute into a container, weighed, and a net weight determined. The difference being that this is a timed test to be performed over some measured period of time. Time the material from its first crossing the weigh bridge until the last material clears the weigh bridge. The conversion to tons per hour is made by use of the following formula:

$$tons/hour = \frac{net\ weight\ of\ aggregate\ (lbs.)}{2{,}000} \times \frac{60}{time\ of\ test\ (mins.)}$$

This figure is compared to the weigh bridge tons per hour shown on the readout. The readout must be within the ± 0.5% accuracy of the computed rate for either aggregate scales or RAP/RAS weigh bridges. Any necessary adjustments are made in the electronics of the weigh bridge scale to compensate for the difference between the actual weight or tons per hour and the digital readout. This adjustment is the Contractor's responsibility.

In drum-mix plants the aggregate is weighed before drying. Since the undried material may contain an appreciable amount of moisture that can influence the aggregate's weight, an accurate measurement of aggregate moisture content is important. From this measurement, adjustments can be made to the automatic asphalt binder metering system to ensure that the amount of asphalt binder delivered to the drum is proper for the amount of aggregate minus its moisture content. The technician should monitor the moisture content of the cold feed aggregate before beginning each day's operation and again about the middle of the day, and the Contractor should adjust the moisture control equipment accordingly. If the moisture content is believed to vary during the day, it should be checked more frequently. The moisture content may be determined manually or electronically. A minimum of one moisture test per normal day's operation shall be performed by the plant technician. See Section 7 for moisture test procedures. Provisions must be made for electronically correcting wet aggregate weight readings to dry aggregate weight readings in the plant control system.

6.6.4 Asphalt Binder Meter System (Quarterly Calibration)

Before this calibration is performed, the Contractor must give the appropriate division QA Supervisor at least two days' notice to allow the QA supervisor an opportunity to observe this calibration. Most drum-mixers are typically equipped with a device (Fig. 6-18) to add asphalt binder to the aggregate inside the drum mixer. Some more recent model drum mix plants may be equipped to add the asphalt binder to the aggregate outside the drum-mixer into a coater box, which is a pugmill type device.

Still other "double barrel" type drum plants will add the asphalt binder between an inner and outer drum. Either of these will utilize an asphalt binder metering and delivery system which is a continuous mechanical proportioning system interlocked with the aggregate weigh system to ensure the exact asphalt binder content of the mix. The weight of aggregate going into the mixer, as measured by the weigh belt, is the basis of determining the quantity of asphalt binder delivered into the drum or coater box, whichever is applicable.

Figure 6-18
Zones in Drum Mixer

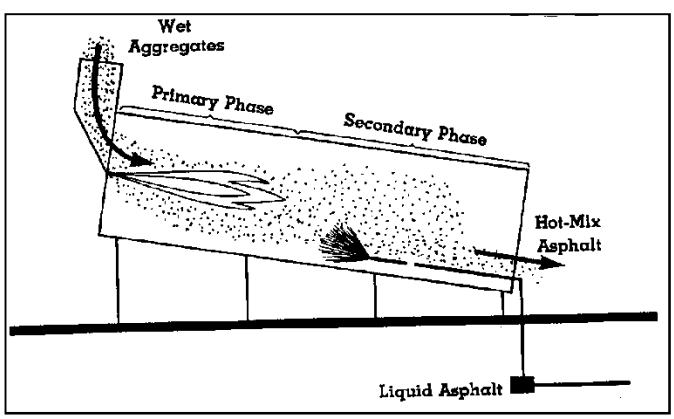

Most metering systems measure the volume (gallons) of asphalt binder being delivered by use of a volumetric flow meter. This volume must be converted to a weight rate of flow. Since the volume and weight are temperature dependent, the plant control system must include a means to allow for temperature and specific gravity variations in asphalt binders. The system must also have a temperature indicating device in the asphalt binder feed line. Procedures for making these adjustments are usually included in the manufacturer's plant operations manual.

Some few drum mix plants are equipped with mass flow meters that measure the mass of asphalt binder being delivered instead of volume. These normally read out in a weight, instead of a volume, and are not temperature and/or specific gravity dependent.

The proportioning of asphalt binder is accomplished by establishing the necessary rate of asphalt binder delivery to match the aggregate delivery rate in tons of dry aggregate per hour. The asphalt binder delivery rate is automatically increased or decreased proportionately according to the corrected dry weight measurement of aggregate passing over the belt scale. The rate of asphalt binder delivery is normally indicated in tons per hour on a rate meter on the control panel.

Means must be provided for checking the accuracy of the asphalt binder metering system. This check should be performed at a minimum of quarterly and should check within ±0.5 percent accuracy. For this frequency, quarterly is defined as once within each calendar quarter not to exceed 90 days apart.

Most drum-mixer plants are equipped with a by-pass valve system which will allow the asphalt binder to be pumped through the flow meter and into a container, instead of into the drum-mixer. By means of this by-pass system, a minimum of 500 gallons (or the appropriate quantity as recommended by the manufacturer) will be pumped off into a container. Due to the quantity to be pumped off, this container will normally be either an asphalt distributor tanker or a supply tanker. This container will need to have been previously weighed empty, in order to obtain the net weight of the pumped-off asphalt binder. These weights should be made by use of a certified set of scales of sufficient capacity. The net weight of the asphalt binder should be compared to the number of gallons shown pumped through the flow meter, if a volumetric flow meter is being used, or compared to the weight shown if a mass flow meter is being used. If a mass flow meter is being checked, a direct weight to weight comparison is made and no conversion is necessary. If a volumetric flow meter is being checked, a conversion of either pounds to gallons, or gallons to pounds, will have to be made in order to make the necessary comparison. This conversion can be made by use of one of the following formulas:

$$\boxed{\boldsymbol{Gallons} = \frac{\boldsymbol{Pounds}\ (\boldsymbol{net\ wt.})}{(\mathbf{8.33}) \times \boldsymbol{Binder\ Specific\ Gravity} \text{ @ } \mathbf{60}^\circ\text{F}}}$$

$$\boxed{\boldsymbol{Pounds} = \boldsymbol{Gallons} \times (\mathbf{8.33}) \times \boldsymbol{Binder\ Specific\ Gravity} \text{ @ } \mathbf{60}^\circ\text{F}}$$

The specific gravity at 60°F should be given on the asphalt binder delivery ticket. The above conversion formulas are useable only if the drum-mixer plant is equipped with systems that automatically compensate for varying asphalt binder temperatures and specific gravities. It is very important to be sure these compensating systems are operating correctly before checking the metering system. Most manufacturers' manuals contain instructions for checking to see if these systems are functioning properly.

The plant manual should always be consulted prior to the meter check for the manufacturer's recommended procedures. This is important because some plant meter readouts show weights, some show gallons (liters) @ 60°F, and others show liters (gallons) @ the actual binder temperature. The plant manual will always give the correct method of calibration and conversion.

The flow meter readout should check within ± 0.5% accuracy. Any necessary adjustments to be made to the metering system are the Contractor's responsibility. Use form QC-2 (see Section 12) for documentation of this meter check.
The plant control read-out will show binder tons per hour being added to the mix. This read-out figure is calculated by the plant control computer system utilizing the aggregate weigh bridge weights and the JMF % binder. This read-out should be mathematically checked occasionally to be sure that the binder quantity is being calculated correctly. The following formula should be used for this calculation:

$$\boxed{\boldsymbol{TPH_{Binder}} = \boldsymbol{TPH_{Dry\ Aggregate}} \left(\frac{\boldsymbol{JMF\ P_b}}{\mathbf{100} - \boldsymbol{JMF\ P_b}}\right)}$$

EXAMPLE CALCULATION:

Given: $JMF\ P_b$ = 6.2% (from JMF)
$TPH_{Dry\ Aggregate}$ = 160.0 (from Aggregate Weigh Bridge)

$$TPH_{Binder} = 160.0\left(\frac{6.2}{100-6.2}\right) = 160.0\,(0.06609808)$$

$$TPH_{Binder} = 10.6\ tons/hour$$

This calculated TPH binder number should be within approximately 8% -10% (not tons per hour) of the readout. If the plant is equipped with an additive metering system it should be calibrated at the same time the binder meter is calibrated. This system should be accurate within ± 10% of amount specified. A similar process to the binder meter calibration will be followed except that only a minimum of 5 gallons must be pumped off and weighed on calibrated scales of sufficient capacity.

6.6.5 Anti-Strip Additive Meter System (Quarterly)

If the anti-strip additive is introduced into the binder at a drum mix plant, the additive meter system shall be calibrated quarterly in accordance with the procedures in Section 6.5.8.

6.6.6 Documentation

Drum plant weigh bridges / asphalt binder meters calibration Form QC-2 (see Section 12) and/or certification by the Department of Agriculture or a certified scale company will suffice for either the initial check or for a periodic check, provided the date of the certification is within the time frame noted. A single scales check may and should serve for several different projects if the check was conducted within the above noted time. Form QC-2 (see Section 12) should be submitted to the Division QA Supervisor at the completion of each scales check. As noted, the QC Technician should post a copy of Form QC-2 in the QC Laboratory when the scales are actually calibrated. A copy shall also be furnished to the appropriate Division QA Supervisor.

6.6.7 Drum-Mixer Dryer

The heart of the drum-mix plant is the drum dryer itself (see Fig. 6-18). The dryer is similar in design and construction to a conventional rotary dryer, except that most drum dryers utilize the parallel flow principle as opposed to the counter flow principle used in conventional batch plants. The burner is mounted at the high end of the drum where the cold proportioned aggregates are introduced. By using this approach, the hottest gases and flame are at the charging end of the drum. When the asphalt binder is introduced further down the drum, it is protected from the excessive harmful effects of the burner flame by the evaporating moisture on the aggregate. The exception to this is the newer model double barrel drum mix plants which have the burner located on the lower end of the drum with the aggregate flow being toward the flame. This is because the inner drum of this type plant serves the purpose of a drying chamber only and not that of a mixing chamber.

Some more recent model drum mix plants have been modified from the more conventional method, to methods that will further protect the asphalt binder from excessive heat. The addition of a coater box at the discharge end of the drum and the double-barrel drum mix plants both serve this purpose. The asphalt binder may be added into the coater box or between the inner and outer drums; both being removed from direct flame exposure. The mix temperature is monitored on all type drum plants by a thermometric device in the dryer discharge chute, which automatically activates the burner controls, and therefore, controls the mix temperature. NCDOT Specifications require that dryer drum mixers have a rated capacity of at least 90 tons per hour when producing a finished mixture at 300°F with removal of 5 % moisture from the combined aggregate.

6.6.8 Surge-Storage Bins (Silos)

In a drum-mix operation, which produces a continuous flow of fresh asphalt mix, it is necessary to have a surge silo for temporary storage of the material and for controlled loading of trucks. A weigh system may be connected to the holding bin of the silo to monitor the amount of material loaded into each truck. Weight measurements are normally recorded by the weigh system control panel, located in the control van or trailer.

Insulated silos or bins can store hot asphalt mix up to 12 hours with no significant loss of heat or quality. Capacities range as high as several hundred tons. Non-insulated storage structures are usually quite small and can store hot mix only for short periods of time. Storage silos work well if certain precautions are followed, but they can cause segregation of the mix if

not used properly. It is good practice to use baffle plates, a batching hopper, a rotating chute, or similar devices at the discharge end of the conveyor used to load the silo. These devices help to prevent the mix from coning and segregating as it drops into the silo. It is also recommended to keep the silo at least one-third full to avoid segregation as the silo empties and to help to keep the mix hot.

Hot asphalt mix is dumped into the top of the bin and falls vertically into the structure. The bin must be designed so that segregation of the mix is held to a minimum. **The subsequent loading of trucks should be made with a minimum of three dumps (see Figure 6-19 below).** Three-dump loading as illustrated below greatly reduces the risks of segregation. Frequent visual checks of the mix must be made by the QC Technician to make certain segregation has not occurred during the charging of the bin and/or during loading into trucks. **Coarse mixes must be watched closely since they are more subject to segregation.** Sample of the mix for testing purposes will be taken directly from the truck body in accordance with procedures outlined in Section 7.

Figure 6-19
Proper 3-Dump Loading of Truck

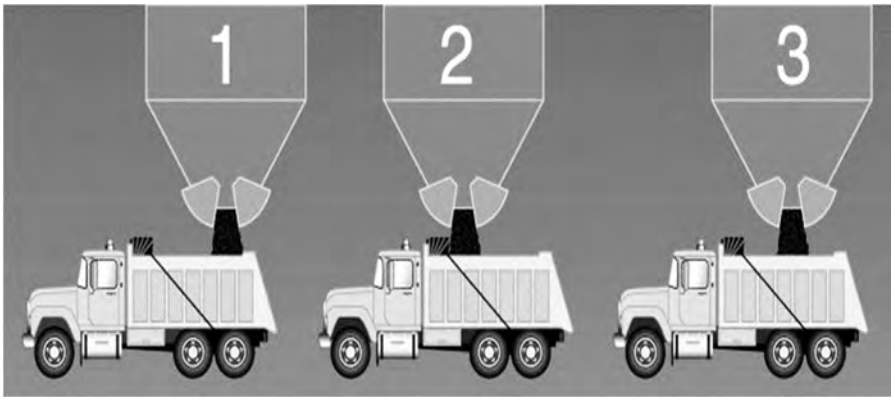

6.7 SEGREGATION OF ASPHALT MIXTURES

Segregation refers to a condition in asphalt in which there is non-uniform distribution of the various aggregate sizes across the mat to the point where the mix no longer conforms with the specified job mix formula. Segregation is the tendency of larger particles to separate from a mass of particles of different sizes under certain conditions. Segregation may be brought about by the methods of mixing, storing, transporting, and handling the mix wherein there is a condition created that favors non-random distribution of the aggregate sizes. Segregation problems are most often associated with drum mix plants. There is, however, nothing to indicate that drum mix plants themselves are more prone to segregation problems than batch plants. Segregation in asphalt pavements is more closely associated with surge-storage systems, which are most often used with drum mix plants. The previous Section 6.6.8 explains the uses of these surge-storage systems, inherit segregation problems, and some possible solutions.

Coarse graded mixes, such as the 25.0 mm Base mixes, are naturally more prone to segregate due to their stone content, low asphalt binder content, and possible gap-grading. Finer graded mixes, such as the 9.5 mm and 12.5 mm surface mixes, do not tend to have severe segregation problems for the opposite reasons of those noted with coarse graded mixes.

Segregation can originate at virtually any point in the process of asphalt production. It can get its start in the mix design, in the aggregate stockpile, in the cold-feed bin, in the batch plant hot bin, in the drum mixer, in the drag-slat conveyor, or in the surge-storage bin. In some cases, segregation doesn't start until the truck is being loaded out. The earlier segregation begins during the process, the worse the problem tends to be due to more movement of the mix in completing the process. Whenever segregation does occur, all of these areas should be closely monitored for their extent of contribution to the problem.

The solution to segregation problems usually lies within several of these problem areas. Modifications in the mix design may be needed; improper handling of the aggregates may need to be addressed; modifications to the plant, drag-slat conveyor, and/or the surge-storage bin may be necessary; and the handling and movement of the mix through the surge-storage bin and into the truck. It's most important to remember that for whatever the reason and at whatever the location segregation begins, after it does, any unrestricted movement, especially down slope movement, will compound the problem drastically. Because of this, down slope movement of the mix should be kept to a minimum throughout the asphalt process. Reference should be made to the segregation diagnostic charts in the Appendix for possible solutions to various types of segregation problems.

6.8 SCALES AND PUBLIC WEIGHMASTER (ARTICLE 106-7)

Specifications for weighing asphalt materials, which are to be paid for on a ton basis, can be found in Article 106-7 of the Standard Specifications. This Article requires that any scales, which are to be used to determine the weight for payment purposes, shall be certified by the North Carolina Department of Agriculture and Consumer Services. This may include platform scales and/or the plant aggregate and asphalt binder scales, depending upon which scales are being used by the Contractor's public weighmaster to issue the weight certificate. ***See Section 5.9 for specific details of the NCDA & CS certification requirements***. Requirements for automatic weighing, recording and printing of tickets are listed under Article 106-7. It should be noted that this Article also requires that the JMF No. be recorded on each asphalt weigh ticket. Also included in this same Article are provisions for checking the scales by re-weighing a truck load of material on another set of approved platform scales.

It is the Resident Engineer's and QA Supervisor's responsibility to assure that the Contractor is meeting the requirements of Article 106-7 before any weight certifications are issued. The requirements of this Article or approval of the weighing equipment is not covered by the plant certification. Weigh tickets provide essential records for the control of project operations, quality, and quantity of mix delivered. Although different systems are used by various agencies, certain items related to tickets remain generally the same from project to project. Weight certificates (weigh tickets numbered consecutively) are generally issued at the asphalt plant. They must state the project number, the origin of the load, time loaded, the temperature and weight of the load, the truck number, the type of mix, the JMF Number, Plant Certification Number and location (station number) where the mix was placed. It will also list the weight and roadway temperature of the mixture. See Section 10.1.3, the Project Special Provisions, and the Construction Manual for detailed requirements for asphalt weigh tickets.

6.9 HAULING OF ASPHALT MIXTURES

The QC and QA technicians must inspect truck bodies in which the mix is to be hauled to be sure that they comply with the Standard Specifications. The truck body should be inspected to make sure that the bed has been lightly coated with an approved release agent to prevent the mixture from adhering to the bed. After the bed is coated, any excess solution must be adequately drained before any mix is allowed to be loaded. Excess solution can be extremely detrimental to mixture in which it comes in contact. **Fuel Oil and Kerosene shall not be used**. For approved list of truck release agents, contact the Asphalt Design Engineer.

The mixing temperature at the asphalt plant will be established on the job mix formula. See Section 6.1 for the normal mixing temperatures. Plant and Roadway Technicians should always refer to the most current Job Mix Formula for the correct mixing temperature. The temperature of all mixes when checked in the truck **at the asphalt plant** shall be within **± 25° F** of the JMF temperature. The temperature of the mix immediately prior to discharge from the hauling vehicle **at the roadway** shall be within **± 25° F** of the JMF temperature.

The mix should be observed frequently and the temperature checked at regular intervals and recorded (See Fig. 6-20). The Contractor shall provide a platform near the truck loading area from which the mix may be observed and from which the samples of the mix may be secured, as well as the temperature of the mix determined. The QC Technician shall see that all trucks are properly covered and the covers securely fastened before leaving the plant to protect the mix from chilling during the haul, caused either by cool weather or rain showers. Cover each load of mixture with a solid, waterproof tarp constructed of canvas, vinyl, or other suitable material. Covers must be of sufficient length and width to cover the entire load.

Figure 6-20
Measuring Temperature of Mix in Truck

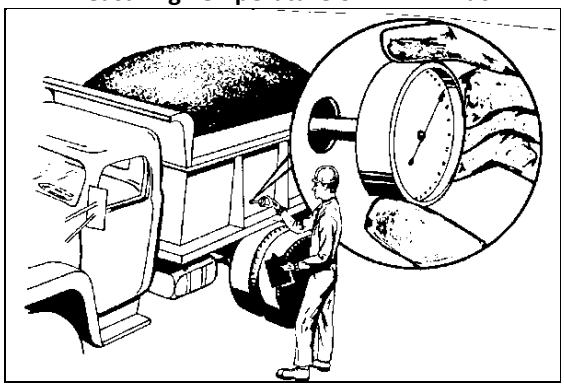

Truck or Platform Scales must meet requirements of Standard Specifications Article 106-7, "Scales and Public Weighmaster". The platform scales shall be certified according to NC Department of Agriculture regulations. (see Section 5.10 for details of DOA certification requirements) The Engineer may require occasional loads to be re-weighed on another set of approved platform scales. Different scales at the same site may be used provided they are DOA approved. When reweighing is being done to check scales accuracy, the weights should compare within 0.4%, plus or minus. (See Form QMS-7 in Section 12)

6.10 POLLUTION CONTROL EQUIPMENT

Specifications require that all plants be equipped and operated with the necessary pollution control equipment in order to meet all applicable State, Federal and Local pollution and environmental regulations. The Contractor must make certain that the plant has been properly registered and permitted prior to the plant being certified by the NCDOT. The Plant Certification will indicate the air quality permit number and the date of expiration.

6.11 SAFETY REQUIREMENTS

Adequate safety devices must be provided by the Contractor at all points where accessibility to plant operations is required. Accessibility to the top of truck bodies will be provided by a platform or other suitable device to enable the technician to obtain samples and mixture temperatures. All gears, pulleys, chains, sprockets, and other dangerous moving parts shall be thoroughly guarded and protected. A clear and unobstructed passage must be maintained at all times in and around the truck loading area. All work areas shall be kept free from asphalt binder drippings.

6.12 PRODUCTION CONSISTENCY AND AUTOMATIC EQUIPMENT

The Specifications state that any asphalt plant that cannot consistently produce a uniform mix meeting the requirements of the job mix formula and other applicable specifications will be considered in non-compliance and may have its certification revoked. These requirements include proper gradation, proper asphalt binder content, uniform mix temperature, and operation of all required automatic equipment.

The Specifications for **batch plants** state that **upon a malfunction of the required automatic equipment, the plant may continue to operate manually for the following two (2) consecutive working days.** If the automatic equipment is not repaired within two (2) working days production of all mix must stop until all repairs are made.

The Specifications also state that when a **malfunction of required automatic equipment occurs at a drum-mix plant, manual operation of the plant will not be allowed** except that if in the opinion of the Engineer an emergency traffic condition exists, the plant may be allowed to operate manually until the unsafe traffic condition is corrected. This mix is subject to the same specification requirements as the mix that is produced automatically. No other production from this plant will be allowed until the malfunction is repaired.

It is the intent of these specifications that all automatic equipment properly operate at all times, except in situations where legitimate breakdowns occur. The Contractor must make every effort to repair any breakdowns of automatic controls immediately.

SECTION 7

ASPHALT MIXTURE SAMPLING AND TESTING

7.1 INTRODUCTION

Sampling and testing of asphalt mix are two of the most important functions performed by QC/QA technicians to assure that a quality product is obtained. Data derived from sampling and testing during production and placement of the mixture are used to control the production process and to determine whether or not the final product meets specification requirements. For these reasons, sampling and testing techniques and procedures must be followed exactly to ensure that results give a true picture of mix quality and characteristics. In addition to performing other responsibilities, a competent QC/QA technician must be able to get representative samples, conduct field tests, interpret the test data, relay the test results to appropriate parties and maintain accurate and adequate records and reports.

Once the job mix formula is issued and before actual construction begins, Mix Verification tests must be performed to determine any differences which may exist between the properties of the asphalt mix designed in the laboratory and the same asphalt mix produced in a batch or drum mix plant. Even though the same material sources are used, quite frequently the plant-produced mix may exhibit different mix properties from that indicated by the mix design. QC testing of the mixture during production is essential to ensure that a satisfactory mix is being obtained. In addition, the Department will perform QA sampling and testing as specified in this Manual and Section 609-9 of the Standard Specifications.

The JMF based on the mix design produced in the laboratory should be treated only as a “start-up” JMF. As production begins, the desired properties of the mix should be checked and monitored on the plant produced, field lab compacted asphalt mixture. Tests that should be performed during manufacture and placement include: aggregate gradations, cold feed calibrations, asphalt binder content, volumetric properties, temperature, theoretical maximum density, in-place density, smoothness and visual inspections, and others as necessary. All of the mix properties on the plant-produced mix should be within the ranges required by the JMF and also within the tolerances set by the QMS Specifications. If the test results on the plant-produced mix indicate compliance with the QMS Specifications, the plant may continue to operate. If one or more of the mix properties is outside the desired range, appropriate actions, as described elsewhere in this Manual, shall be taken immediately.

In addition to sampling and testing performed by QC/QA technicians on projects, assessments will be performed by the Materials and Tests Unit’s Independent Assurance (IA) personnel. The Independent Assurance (IA) program ensures that the personnel performing QMS testing on all projects remain proficient. If the assessment finds problems with the technician’s proficiency, corrective action will be required and the technician will be reassessed (see Section 1.4 for details of the Technician Assessment Program). This program also assures that the laboratory equipment used in the testing is properly maintained and calibrated. This is achieved by taking samples (typically a split sample) at either the QC or QA labs and testing those samples at a Materials and Tests Unit facility. The results are compared to a correlation rating system derived from statistical analysis of previous comparative tests. If the results of the comparative samples are within the Excellent/Good range, no investigation is required. If the results are in the Fair/Poor range, an investigation is initiated by IA personnel in an attempt to determine the reason for the disparity. This investigation shall include, but is not limited to: analysis of all calculations performed and procedures used by the QC/QA personnel, investigation of the testing equipment used, and the personnel performing the IA testing. Analysis of all test results, and if necessary, re-sampling and testing under observation, are other investigation tools available. The IA personnel will normally coordinate their visits with the QC/QA technician in order to prevent unnecessary sampling. Full cooperation should be given to the IA personnel to insure that their sampling requirements are met. Any questions concerning this IA process for asphalt should be directed to the Asphalt Laboratory at the Materials and Tests Unit, (919) 329-4060.

This Section describes in detail the sampling and testing frequencies, procedures and test methods utilized by NCDOT. As everyone is aware, there is much concern by the Division of Highways, the Federal Highway Administration and Asphalt Industry Representatives about the quality of asphalt pavement construction in North Carolina. Full cooperation and efforts by all parties is necessary in order to assure that pavements are produced and constructed so as to perform as intended. If the Resident Engineer, QMS Technician, Contractor or others should have questions or need further clarification about the guidelines, procedures, or instructions noted in this Manual, please contact the Asphalt Laboratory at any time. All forms and worksheets utilized for Sampling and Testing of mix and aggregates are contained in Section 12 along with detailed instructions.

7.2 QMS CERTIFIED FIELD LABORATORY

For a contract with 5,000 or more total tons (metric tons) of mix, the Contractor shall furnish and maintain a certified laboratory at the plant site. The laboratory shall be furnished with the necessary space for equipment, and supplies for performing contractor quality control testing. A minimum of 320 square feet, exclusive of toilet facilities is required for all QC labs. A 500 square feet facility is suggested. There should also be an accurate organizational chart, updated annually, with phone numbers for QC personnel posted in the QC Lab.

For a contract with less than 5,000 total tons (metric tons) of asphalt mix, the Contractor may conduct the quality control testing in a certified off-site laboratory. The Contractor may utilize private testing labs and technicians provided the Department has certified them. The Contractor is still required to have a QMS Level I certified technician at the plant site while producing mix for a NCDOT QMS project.

The laboratory testing equipment shall meet the requirements of the test methods herein and outlined in Section 7.3. Laboratory equipment furnished by the Contractor or his representative shall be properly calibrated and maintained. In the event of a malfunction of laboratory equipment, which cannot be corrected within twenty-four (24) hours, another certified offsite laboratory may be used if approved by the Engineer. The Contractor shall document and maintain calibration results of all equipment at the QC laboratory. See Section 7.2.2 for QMS Lab Equipment Calibration Requirements. The Engineer shall be allowed to inspect measuring and testing devices to confirm both calibration and condition. If at any time the Engineer determines that the equipment is not operating properly or is not within the limits of dimensions or calibration described in the applicable test method, the Engineer may stop production until corrective action is taken.

The Contractor shall notify the Division QA Supervisor as to when the QC lab is ready for inspection and certification. This should be done as much as possible in advance of the paving operation (approx. 10 days) so that the QA Supervisor can complete the QC Lab Certification Checklist and submit it to the Asphalt Design Engineer for approval and certification. Once the field lab is certified, a copy of the checklist and certification will be forwarded to the Contractor. This certification shall be posted in the field lab at all times. The paving operations shall not begin until the lab is certified.

The Department will maintain a Quality Assurance (QA) Lab in each Highway Division, which will normally be centrally located within the Division. This Division QA Lab will be for the purpose of performing all necessary tests in monitoring the Contractor's QC process and for maintaining all documentation of this process. It will be staffed by a Division QA Supervisor and several QA technicians.

7.2.1 QMS Lab Required Equipment List For Asphalt Mix Testing

The Asphalt Design Engineer maintains a listing of the required equipment for a QMS Lab. Copies of this list are also furnished to each QA Supervisor anytime updates are made.

REQUIRED EQUIPMENT FOR QMS CERTIFIED LABORATORIES

QUANTITY	DESCRIPTION
1 each	Computer with Internet Access & capable of data input to the Department's QAP System.
1 each	Fax Machine / Scanner (must be functioning properly)
1 each	Infrared Thermometer (0° - 400°F, minimum)
1 each	Digital Thermometer (0° - 400°F, minimum) with Probe
2 each	Asphalt Dial Thermometer (50° - 400°F, minimum) (Optional)
1 each	Thermostatically-Controlled Hot Plate & Frying Pan OR Electric Skillet (Optional, if using Ovens for Drying)
1 each	Sieve Shaker w/ Timer (able to accommodate both 8" & 12" diameter sieves)
1 each	Mechanical Aggregate Washer (Optional)
1 set	Electronic Balances (12,000 gram minimum capacity with center suspension point)
1 each	Stainless Steel Weighing Cradle
1 set	Electronic Balances (8,000 gram minimum capacity)
1 each	Vacuum Pump
1 each	Manometer
1 set	Vacuum Pycnometer & Lid with Two Vacuum Hose Connections for Rice Gravity
1 each	Mechanical Agitation Device for Rice Sample
1 each	Electric Timer with 15 Minute Capacity or more

1 each	Thermostatic Heater for Water Container
1 each	Immersion Circulation Pump
1 each	Temperature Chart Recorder w/ remote probe OR Digital Data Logger with temperature display and USB interface for data download
2 each	Electric Fans, 16” (406 mm) minimum
1 each	Water Trap for Vacuum Pump
1 each	Bleeder Valve for Vacuum Pump Line
1 each	Refrigerator, Apt. Size or Larger
4 each	Metal or Plastic Buckets, 5 gal. (19 L)
1 each	Plastic Water Container w/ Overflow, 24” diameter minimum or 24” x 18” x 18” minimum
1 each	Stainless Steel Bowl, 5 qt. (5.0 L)
1 each	Stainless Steel Bowl, 8 qt. (8.0 L)
1 each	Square Shovel or Modified Shovel with approx. 2 - 4 inch sides for Sampling
1 each	Metal Top Splitting Table, 3 ½ ft. x 3 ½ ft. minimum
6 each	Metal Mix Sample Pans, 12 ½” x 10 ½” minimum
1 each	Shop Vac
1 set	Calibration Weights
1 each	Trowel, Straight Sided (Optional)
1 set	Spatulas (1 @ 4” & 1 @ 6”)
1 each	Flat Bottom Sampling Scoop
1 each	Metal Quartering Template – w/ sides of sufficient height that form a 90° angle OR Acceptable Alternate
2 each	Large Spoons, 8” min. length
1 pair	Rubber Gloves
2 pair	Welder’s Gloves
2 each	Assortment of Brushes for cleaning sieves
- - -	Clean Rags
- - -	Wetting Agent (any dispersing agent such as liquid dish washing detergent, or soap which will promote the separation of fine material.)
- - -	Permanent Paint Marking Pens
- - -	Large Cloth Sample Bags (Good Condition)
- - -	Lab Oven(s) minimum 10.0 CF capacity. Must be <u>forced air convection, thermostatically controlled & operable</u>.
1 each	Approved Ignition Furnace (meeting the requirements of AASHTO T 308)
1 each	NCDOT Approved 150mm Gyratory Compactor w/Printer (meeting the requirements of AASHTO T 312)
1 each	150 mm Gyratory Specimen Extractor (unless built into the compactor)
3 each	150 mm Gyratory Specimen Molds (See section 7.2.2 (A-8))
4 each	12” x 15” (305 mm x 380 mm) Metal Mix Sample Pans
1 each	Ruler (for measuring core sample height)
1 set	12 inch Diameter Sieves (with cover & pan)

1	50.0 mm	1	19.0 mm	1	4.75 mm	1	0.600 mm	2*	0.075 mm
1	37.5mm	1	12.5 mm	1	2.36 mm	1	0.300 mm		
1	25.0 mm	1	9.50 mm	2*	1.18 mm	1	0.150 mm		

*Additional sieves required for washed gradation (1.18 mm & 0.075 mm nest) may be 8” diameter.

<u>The following will be required for TSR testing at each Lab used for Mix Designs:</u>

1 each	Loading Jack or Test Press with Calibration Spring (capable of printing hardcopy graphs such as a chart recorder or downloadable to a computer for printout)
1 each	150 mm TSR Breaking Head
1 each	Hot Water Bath with Agitator
1 each	Infrared Thermometer (0° - 400°F, minimum)

7.2.2 QMS Lab Equipment Calibration Requirements

Laboratory equipment furnished by the Contractor or his representative shall be properly calibrated and maintained as specified below. QC process control may require additional equipment verifications to ensure accurate test results.

The Contractor shall document and maintain all QC records, forms and calibrations for a minimum of 3 years after completion. It is recommended that all records be kept in one (1) binder. This binder shall be readily available for review by the Department or its representative. Periodically, each lab may be audited by the Department or its representative. The audit will consist of a review of calibration records and random verifications of equipment for compliance. In the event a plant does no NCDOT work for an extended period of time and these checks are not performed, this period of inactivity should be documented in the QC diary.

Test methods and forms listed *(Italics)* are available through the NCDOT Materials and Tests Unit in Raleigh at (919) 329-4060. If the M&T Forms listed are not utilized, then the replacement form must include the identical information listed on the referenced M&T Forms and be labeled clearly for each piece of equipment verified/calibrated.

The gyratory compactor and ignition furnace time and date stamp shall be checked daily to ensure accurate information is displayed on the printout. The time and date shall be accurate and consistent with the time and date displayed within 5-10 minutes of the time printed on the certified weight certificate (load tickets).

A. Gyratory Compactors and Molds

1. Standardization on the compactor shall be performed every 12 months and must be performed by the manufacturer or a certified representative (certified by manufacturer). This standardization must include internal angle verification. Paperwork (or certification sticker affixed to device) shall be provided showing the following information:
    a. Date of standardization/verification and maintenance
    b. Value for internal angle
    c. Type of internal angle device used
    d. Individual Mold Diameter Measurements
    e. Personnel who performed standardization/verification
    f. Any repair work performed
2. Internal Angle shall be standardized every 12 months as per AASHTO T 344 ($1.16 \pm 0.02°$)
3. Pressure shall be standardized every 12 months, as per manufacturer specifications (600 ± 18 kPa)
4. Frequency of gyration shall be standardized every 12 months (30.0 ± 0.5 gyrations per minute)
5. Height shall be verified daily, as used (± 0.1 mm of plug height)
6. The above standardizations/verifications for each calendar year shall be printed (if applicable) and kept in a folder/binder that shall be labeled “Gyratory Compactor Verifications”.
7. The above standardizations/verifications shall be performed within 10 calendar days of moving the compactor from one laboratory to another. The compactor must also be recalibrated after any repairs or replacement of parts.
8. Gyratory Molds shall be uniquely identified* and the diameter verified every 12 months by the manufacturer or a certified representative, using a three-point internal bore gauge in accordance AASHTO T 312, Annex A. The inside diameter of new molds shall be 149.90 mm to 150.00 mm (measured at room temperature). If any in-service mold exceeds 150.20 mm, it shall be taken out of service and replaced.
9. Gyratory ram face and mold base plates shall be checked for critical dimensions every 12 months.
10. Mold, ram head, and base plate measurement information shall be stored in a binder or folder.

* Uniquely identified molds refer to individual molds that are permanently etched and can be matched with calibration paperwork and tracked over time.

B. Balances and Water Tanks

1. Balances - general purpose balances shall be standardized every 12 months using NIST Class F traceable weights by a registered scale technician through the North Carolina Department of Agriculture and Consumer Services Standards Division. These balances shall be verified weekly by QC/QA lab personnel following the procedures in *Test Method MT-3V* and recorded on *Form 3V* or equivalent.
2. Balances must meet requirements of AASHTO M 231. When standardized every 12 months, each balance shall have a certification/sticker that provides:
    a. Date of standardization.
    b. Scale technician who performed standardization.

3. If the balances are being used for bulk specific gravity or maximum gravity methods and utilize a suspended cable, the steel cable or wire shall be of the smallest practical size to minimize any possible effects of variable immersed length. Also, the opening in the table or stand shall allow the cable free movement with no restrictions. Linked chain of any kind shall not be allowed.
4. The water tanks shall be made of a non-corroding material and have provisions for automatic control of the water temperature as well as a circulation pump.
5. Each tank shall be equipped with a recording thermometer with its bulb located in the water. (Recording charts shall be replaced monthly (or at the appropriate recording interval).
6. The tanks shall be deep enough to completely submerse the specimen and cradle and be equipped with an overflow outlet for maintaining a constant water level. The water tanks shall be visually inspected weekly and water replaced at least once per month (or more often as needed).

C. Ovens and Water Baths

1. Asphalt mix ovens - shall be a forced draft oven, thermostatically controlled, capable of maintaining any desired temperature setting from room temperature to at least 350°F (176°C).
2. Ovens shall be in proper working order with doors that seal properly with no broken hinges.
3. Ovens shall be standardized every 12 months using a NIST traceable thermocouple thermometer and following the procedures *of Test Method MT-2V* and recorded on *Form 2V* or equivalent. If the temperature readout does not match the NIST thermocouple, it shall be adjusted so the temperature readout is correct.
4. A record shall be kept of all annual standardizations as well as any repairs made to the ovens and shall include the following:
    a. Date of last standardization
    b. Temperature at which oven was standardized
    c. Personnel who performed standardization
5. Water baths shall be thermostatically controlled and shall be standardized every 12 months using an NIST traceable thermocouple thermometer and following the procedures *of Test Method MT-2V* and recorded on *Form 2V* or equivalent. If the temperature readout does not match the NIST thermocouple, it shall be adjusted so the temperature readout is correct.

D. Ignition Furnace

1. Forced air ignition furnaces shall be capable of maintaining the temperature at 1072°F (578°C). The furnace shall have an internal balance capable of weighing a 3500 gram sample in addition to the basket assembly. Ovens shall be in good working condition. All safeguards shall be in place and shall function properly.
2. The internal oven balance shall be standardized every 12 months by a registered scale technician through the North Carolina Department of Agriculture and Consumer Services Standards Division using NIST Class F weights following *Test Method MT-35V* and the results recorded on *Form 35V* or equivalent. (8000 gram weight required)
3. Each ignition furnace shall have a lift test performed monthly when the furnace is at room temperature, following the procedures of *Test Method 35V(A).* These results shall be recorded on *Form 35V(A)* or equivalent.

E. Vacuum Pump(s) and Rice Gravity System

1. Vacuum pumps used for maximum gravity testing shall conform to the standards of AASHTO T 209, Section 6.
2. The vacuum system shall include a vacuum gauge, a water vapor trap, hoses, a vacuum pump, and a manometer (absolute pressure gauge).
3. The vacuum within the pycnometer shall be verified every 3 months with an absolute vacuum gauge and the manometer should be adjusted accordingly. The system shall be verified following the procedures of *Test Method 28V* and documented on *Form 28V* or equivalent. Additionally, this verification shall be conducted anytime maintenance or adjustments are performed.
4. Vacuum settings for Automatic Sealing and/or Rapid Drying equipment shall be verified every 3 months, any time after repairs are performed, and anytime the unit is relocated.
5. The calibrated vacuum gauge used for the above checks shall be capable of being placed inside the device's vacuum chamber to verify vacuum performance and seal integrity. The gauge shall have a minimum range of 10 to 0 mmHg (10 to 0 torr) and readable to 1 mmHg (1 torr) increments as a minimum. This vacuum gauge shall be standardized once every 12 months.
6. Verify the dry weight and under water weight of the Rice pycnometer monthly, using water at 77 ± 2 °F (25 ± 1 °C).

F. Shakers and Sieves

1. Shakers shall be visually inspected weekly and maintained.
2. Sieves shall be visually inspected weekly following *Test Method MT-11V* and documented on *Form 11V* or equivalent.
3. Any sieve that is damaged or broken shall be immediately replaced with a new sieve.

G. Compression Testing Machines

1. The test press shall be capable of loading at a speed of 2 inches/minute (50 mm/min).
2. The test press shall be standardized using the manufacturer's recommended method which usually involves using a proving spring or a proving load ring. The test press shall be standardized every 12 months and the data shall be stored and be available for review.

H. Thermometers

1. Thermometers shall be standardized every 12 months.
2. Thermometers shall be visually inspected daily for damage or defects. Any thermometers that are found to be defective shall be removed from service immediately.

I. Scale Weights

1. Scale Weights used for checking balances and scales shall be calibrated every 12 months.
2. Certificates of calibration shall be available upon request.

Items listed above shall adhere to the requirements of this Manual and Department policies. Failure to comply with these requirements may result in lab certification being suspended until all testing equipment meets calibration requirements.

In the event of an equipment malfunction that cannot be corrected within 24 hours, the laboratory must provide documentation from the service company detailing the repairs and/or parts needed. Also, provide documentation from the service company outlining the timeframe for when the service/repair can be completed. Fax [(919) 329-4242] or email documentation to the Asphalt Design Engineer.

QMS Lab Equipment Calibration Requirements

Equipment	Requirement	Minimum Interval
Gyratory Compactor	Standardize: Internal Angle of Gyration, Ram Pressure, Frequency of Gyration, Ram Head dimension	12 months
	Verify: Height	Daily
Gyratory Mold	Verify: Inside Diameter, Base Plate diameter	12 months
Balance/Scale	Standardize: Weight measurement	12 months
Water Tank	Visually Inspect	Daily
	Replace Water	Monthly (or as needed)
Oven	Standardize: Temperature setting	12 months
Water Bath	Standardize: Temperature setting	12 months
Ignition Furnace	Standardize: Internal Balance	12 months
	Perform Lift Test	Monthly
Vacuum Pump and System	Verify: Pressure inside pycnometer	3 months
	Verify: Dry & Underwater weights of pycnometer	Monthly
Automatic Sealing equipment & Rapid Drying equipment	Verify: Pressure inside chamber	3 months
Shakers and Sieves	Visually Inspect & Maintain	Weekly
Compression Testing Machines	Standardize: Load & Loading Speed	12 months
Thermometers	Standardize: Temperature reading	12 months
	Visually Inspect	Daily
Scale Weights	Calibrate: mass	12 months

NORTH CAROLINA DEPARTMENT of TRANSPORTATION

HMAQMS

CERTIFIED SUPERPAVE LABORATORY

This is to certify that
the Asphalt Testing Laboratory located at

Quality Paving Co., Inc.

Everywhere, N.C.

meets all requirements of the
North Carolina Department of Transportation's
Superpave and Quality Management System specifications

Todd W. Whittington, PE
State Asphalt Design Engineer

SP-000-00-00

Certification No.

QMS Plant Sampling Schedule

Plant Mix

Material	Point at which Sample is taken	Minimum Sample Size	Sampled By	Frequency of Test	Test	Tested By
ASPHALT MIXTURE: **FULL TEST SERIES**	From truck at plant site (Section 7.5 QMS Manual)	200 lbs. Split and quartered (Section 7.5 QMS Manual)	QC & QA Personnel	One per each 750 tons of Accumulated Mix Produced (per AMD per plant per year)	Binder Content (NCDOT-T-308) Bulk Specific Gravity (NCDOT-T-312) AND (NCDOT-T-166) OR (NCDOT-T-331) G_{mm} (NCDOT-T-209) OR (NCDOT-D-6857) Recovered Agg. Gradation (NCDOT-T-30)	QC & QA Personnel
ASPHALT MIXTURE: **PARTIAL TEST SERIES**	From Truck at plant site (Section 7.5 QMS Manual)	100 lbs. Split and quartered into sample size. (Section 7.5 QMS Manual)	QC Personnel	One per Day when more than 100 tons is produced and a Full Test Series does not occur	Binder Content (NCDOT-T-308) Recovered Blended Aggregate Gradation (NCDOT-T-30) G_{mm} required for Maintenance Version (NCDOT-T-209) OR (NCDOT-D-6857)	QC & QA Personnel
AGGREGATE STOCKPILE GRADATION (1)	Stockpile or Cold Feed Belt at Plant Site	Fine Agg. 10 lbs. (No Split Req'd.)	QC & QA Personnel	Mix Verification (within one week prior) and Weekly (2) and Plant Mix Problems	Aggregate Gradation (NCDOT-T-11 & T-27)	QC & QA Personnel
		Coarse Agg. 25 lbs. (No Split Req'd.)	QC & QA Personnel	Beginning Production (2) AND Weekly (2)		
RAP and/or RAS MATERIAL	Stockpile or Cold Feed Belt at Plant Site	25 lbs. Split and quartered into sample size.	QC & QA Personnel	Beginning of Production and Weekly thereafter	Binder Content (NCDOT-T-308) Recovered Agg. Gradation (NCDOT-T-30)	QC & QA Personnel
RETAINED TENSILE STRENGTH TEST(TSR) (3)	From Truck at Plant Site	200 lbs. Split and quartered into sample size. (Section 7.5 QMS Manual)	QC & QA Personnel	Provide test results within 7 calendar days after beginning production, when change in anti-strip source, dosage, or as deemed necessary by Engineer. **[for WMA, see Section 7.16.1 (D)]**	Tensile Strength Ratio in accordance with NCDOT-T-283	QC & QA Personnel
COMBINED AGGREGATE MOISTURE CONTENT	Stockpile or Conveyor Belt or Discharge Chute	Sample size in accordance with NCDOT-T-255 (No Split Req'd.)	QC Personnel	Minimum of once Daily at Drum Mix Plants	Moisture Content in accordance with NCDOT-T-255	QC Personnel

(1) Note: QA Sample will be a Verification sample.

(2) Note: In lieu of aggregate stockpile gradations, the Contractor may furnish gradation quality control test data conducted by the aggregate producer, which is representative of the Contractor's current stockpiles.

(3) Note: TSR not required for HMA Mix Verification but acceptable to be done at that time.

7.3 QUALITY CONTROL (QC) MINIMUM SAMPLING AND TESTING SCHEDULE

Sampling and testing are methods of evaluating and documenting the quality of the product. The QC/QA Technician must know what frequency of sampling and testing is required for both Plant and Roadway Operations, the manner and location in which samples are to be taken, and the number of samples required for a given day's production. It is the QC Technician's responsibility to ensure that representative samples are obtained in accordance with the specific contract guidelines. He / She must also ensure that samples are properly identified with the time, date and location. The QC/QA Technician shall know the procedures for tests he/she must conduct and should follow those procedures to ensure accurate results. If laboratory testing of samples is required, the QC/QA Technician should follow-up to ensure that tests are made as scheduled and that results are promptly evaluated.

The Contractor shall maintain minimum test frequencies as established below. All tests shall be completed within 24 hours of the time the sample was taken. If not completed within this time frame, all asphalt mix production shall cease until the tests are completed. An essential element of quality control is the ability to react and make changes if asphalt mix deficiencies occur. Therefore, it is intended for all tests to be performed directly after being sampled to allow the producer to react to the test results.

Mix control criteria are the 2.36 mm and 0.075 mm sieves, % Binder Content (P_b), Voids in Total Mix (VTM), Dust/Binder Ratio ($P_{0.075}/P_{be}$), Voids in Mineral Aggregate (VMA), $\%G_{mm}$ @ N_{ini}, and TSR.

The Contractor shall sample and perform a full test series on the completed mixture ***from each mix design per plant per year*** **(mix used on NCDOT projects)** at the following minimum frequency during mix production.

Accumulative Production Increment	Number of Samples per Increment
750 tons (750 Metric Tons)	1

If production is discontinued or interrupted before the accumulative production increment tonnage is completed, continue the increment on the next production day(s) until the increment tonnage is completed. Obtain the random sample within the specified increment at the location determined in accordance with the most current edition of the Department's HMA/QMS Manual. When daily production of each mix design exceeds 100 tons (100 metric tons) and a regularly scheduled random sample location for that mix design does not occur during that day's production, perform at least one partial test series as outlined in the schedule below. These partial test series and associated tests do not substitute for the regularly scheduled random sample for that increment.

If the contractor's frequency fails to meet the minimum frequency requirements as specified, all mix without the specified test representation will be unsatisfactory. The Engineer will evaluate if the mix may remain in place with accordance with Article 105-3.

Any additional contractor samples taken and tested at times other than the regularly scheduled random samples or directed samples which do not take the place of regularly scheduled samples will be considered Process Control (PC) samples and shall be designated accordingly on the appropriate forms. Process Control test results will not be plotted on control charts nor reported to the Quality Assurance Laboratory.

During production of mix used on NCDOT projects the Contractor shall conduct quality control sampling and testing on the asphalt mixture consisting of:

I. Full Test Series

Asphalt Mixture - 200 lbs. Sampled From Truck at Plant (Section 7.5)

(Split Sample Required. Shall be retained for 7 calendar days)

A. Binder Content, % Ignition Furnace (NCDOT-T-308)

Note: Contractor may request and use other means (namely AASHTO T 164) of determining percent asphalt binder, subject to approval by the Engineer.

B. Gradation on Recovered Blended Aggregate from Mix Sample (NCDOT-T-30) Gradation required on all of the sieves specified on JMF.

C. Maximum Specific Gravity (NCDOT-T-209 OR NCDOT-D-6857)

D. Bulk Specific Gravity of Compacted Specimens (NCDOT-T-166 OR NCDOT-T-331), average of 3 specimens at N_{des} gyrations (NCDOT-T-312) (Specimens shall be retained for 7 calendar days)

E. Air Voids (VTM), average of 3 specimens at N_{des} gyrations

F. Voids in Mineral Aggregate (VMA) (calculation)

G. Voids Filled with Asphalt (VFA) (calculation)

H. $P_{0.075}/P_{be}$ Ratio

I. % Maximum Specific Gravity at N_{ini} (calculation)

II. Partial Test Series

Asphalt Mixture – 100 lbs. Sampled from the truck at plant (Section 7.5)

(Split Sample Required. Shall be retained for 7 calendar days)

A. Binder Content, % Ignition Furnace (NCDOT-T-308)

Note: Contractor may request and use other means (namely AASHTO T 164) of determining percent asphalt binder, subject to approval by the Engineer.

B. Gradation on Recovered Blended Aggregate from Mix Sample (NCDOT-T-30) Gradation required on all of the sieves specified on JMF.

C. G_{mm} is required for a partial test series in accordance with Maintenance Version.

III. In addition to the above schedule, conduct the following sampling and testing as indicated:

A. Aggregate Stockpile Gradations (NCDOT-T-11 & T-27) (sampled from stockpiles or cold feed system as follows; split samples not required)

1. Coarse Aggregates (Approved Standard Sizes)
   a. At beginning of production *
   b. Weekly thereafter *
2. Fine Aggregates (Stone Screenings, Natural Sands, etc.)
   a. At or within 1 week prior to mix verification (Gradations Valid for Multiple Mix Designs)
   b. Anytime production is stopped due to plant mix gradation related problems
   c. Weekly after mix verification

*In lieu of the aggregate stockpile gradations performed by QC, gradation quality control data conducted by the aggregate producer, which is representative of the Contractor's current stockpiles, may be furnished.

B. Reclaimed Asphalt Pavement (RAP) Binder Content and Washed Gradation (NCDOT-T-30 & T-308). Sampled from stockpiles or cold feed system at beginning of production & weekly thereafter. (If RAP mixes are being produced) Have RAP approved for use in accordance with Article 1012-1(G) and Table 1012-2 of the Standard Specifications. (Split Sample Required. Shall be retained for 7 calendar days)

C. Reclaimed Asphalt Shingle Material (RAS) Binder Content and gradation (NCDOT-T-30 & T-308). Sampled from stockpiles or cold feed system at beginning of production & weekly thereafter. (If RAP mixes are being produced) Have RAS approved for use in accordance with Article 1012-1(F) of the Standard Specifications. (Split Sample Required. Shall be retained for 7 calendar days)

D. Combined Aggregate Moisture Content (NCDOT-T-255) Drum Plant Only (sampled from stockpiles or cold feed system a minimum of once daily).

E. Tensile Strength Ratio (TSR) (NCDOT-T-283). Additional TSR testing is required when a change is made in anti-strip additive dosage or when a new anti-strip additive source or grade is utilized, unless otherwise approved. Other TSR test(s) may be directed as deemed necessary. TSR testing is not required for mix verification, but may be performed at that time.

FOR WMA: See Section 7.16.1 (D) of QMS Manual.

F. Draindown Test for Uncompacted Asphalt Mixtures (NCDOT-T-305)

NOTE: Any retained samples shall be stored by the Contractor in a safe, dry place for 7 calendar days, or until disposal permission is given by the Quality Assurance personnel, whichever occurs first.

7.3.1 Sample Location for Mix

Prior to beginning production each day, the Contractor shall specify the projected tonnage of each mix type to be produced from a plant and furnish this information to the appropriate QA Lab on the QC-9 form, along with the random sample locations for that day's production. (See Section 12 for detailed instructions for this form.) This tonnage is not project specific but plant specific.

The approximate location of each sample within the increments shall be determined by selecting random numbers from Table 7-1 in accordance with the procedures detailed in ASTM D3665. **This is the only acceptable means of determining random numbers for plant mix test locations**. The random numbers selected shall then be multiplied by the 750 tonnage increment. This number shall then be added to the final tonnage of the previous increment to yield the approximate total tonnage when the sample is to be taken. A copy of the certified weight certificate from the load the sample was obtained shall be attached to the QA/QC-1 form.

Sample tonnage(s) shall be computed to the nearest whole ton (metric ton). This process shall be recorded on the QC-9 form prior to beginning production of each increment, with the original maintained at the QC Lab for inspection

by the QA personnel. **This form should also be sent to the appropriate QA Supervisor prior to production each day or at the beginning of producing a different mix during the day. Instructions for completing the QC-9 form can be found in Section 12. In the event of production over a night shift, weekend, or holiday, the Contractor shall contact the QA Supervisor via a telephone call, text, etc. so that he can make any needed arrangements for obtaining possible samples during this time.**

All regularly scheduled random samples shall be taken at the sample tonnage as determined above. The random sample locations shall not be made known to the plant operator in order to maintain the integrity of the random sampling process. As an exception to these regularly scheduled random samples, a mix sample shall be taken and a full test series performed on mix incorporated into a control strip when proceeding on limited production procedures due to failing densities. When a mix sample is obtained in conjunction with a control strip, that sample will not substitute for the next randomly scheduled QC mix sample for that tonnage increment, nor shall it be plotted on the control charts. However, all applicable plant mix tests results shall be reported to QA. The maximum specific gravity (G_{mm}) used to calculate percent compaction for the control strip placed shall be the individual G_{mm} for the sample of mix taken from the mix incorporated into the control strip (See Section 10.9).

NCDOT Random Numbers Table (ASTM D3665)
To Be Used For the QC-9 Form

ASTM D3665 will be the only acceptable method used to produce random numbers for the QC-9 Form with the following stipulations. The starting point will always be the upper left corner of the random number table and the progression will be down the numbers in that column. Once all one hundred numbers in a column have been used, the progression will be to the top of the next column and the process repeated. As random numbers are used from the table, each used random number shall be lined through (not obliterated) to show that they have been used. In addition, the mix type should be noted beside the random number used.

When utilizing this table the following additional rules will also apply. The same random numbers table will be used for all mix designs per plant per calendar year. If all random numbers in TABLE 7-1 are used prior to the end of the calendar year, this process will begin anew and continue thru the end of that same calendar year.

Table 7-1

	Mix Type	*0*	*Mix Type*	*1*	*Mix Type*	*2*	*Mix Type*	*3*	*Mix Type*	*4*	*Mix Type*	*5*
1		0.508		0.241		0.541		0.485		0.472		0.553
2		0.351		0.035		0.257		0.842		0.128		0.738
3		0.680		0.127		0.335		0.816		0.799		0.166
4		0.191		0.745		0.189		0.962		0.191		0.563
5		0.184		0.785		0.066		0.904		0.952		0.685
6		0.091		0.698		0.961		0.011		0.609		0.095
7		0.358		0.130		0.530		0.815		0.491		0.136
8		0.655		0.972		0.149		0.881		0.739		0.118
9		0.539		0.063		0.833		0.523		0.732		0.074
10		0.519		0.950		0.715		0.308		0.976		0.267
11		0.352		0.975		0.917		0.361		0.782		0.906
12		0.943		0.246		0.539		0.432		0.317		0.161
13		0.029		0.846		0.653		0.579		0.170		0.686
14		0.357		0.096		0.931		0.430		0.902		0.238
15		0.075		0.090		0.294		0.864		0.661		0.982
16		0.108		0.843		0.222		0.045		0.845		0.214
17		0.726		0.068		0.126		0.058		0.256		0.543
18		0.353		0.300		0.130		0.132		0.960		0.346
19		0.869		0.673		0.210		0.280		0.199		0.527
20		0.363		0.089		0.218		0.552		0.941		0.427
21		0.013		0.847		0.261		0.126		0.245		0.370
22		0.327		0.191		0.932		0.574		0.539		0.588
23		0.047		0.731		0.983		0.792		0.623		0.780
24		0.460		0.848		0.920		0.318		0.370		0.400
25		0.674		0.847		0.650		0.296		0.732		0.606
26		0.716		0.513		0.873		0.003		0.876		0.317
27		0.084		0.741		0.384		0.734		0.359		0.207
28		0.052		0.502		0.646		0.203		0.810		0.516
29		0.105		0.863		0.068		0.217		0.887		0.255
30		0.881		0.036		0.061		0.345		0.256		0.220
31		0.955		0.453		0.977		0.957		0.165		0.169
32		0.390		0.887		0.120		0.026		0.313		0.856
33		0.819		0.689		0.344		0.603		0.172		0.356
34		0.074		0.488		0.503		0.973		0.233		0.316
35		0.015		0.795		0.367		0.234		0.135		0.834
36		0.761		0.613		0.894		0.426		0.743		0.738
37		0.494		0.236		0.964		0.302		0.702		0.029
38		0.514		0.163		0.919		0.022		0.858		0.967
39		0.629		0.702		0.829		0.491		0.134		0.406
40		0.062		0.044		0.611		0.529		0.385		0.074
41		0.245		0.147		0.219		0.813		0.225		0.790
42		0.436		0.267		0.796		0.974		0.108		0.416
43		0.928		0.905		0.809		0.189		0.684		0.137
44		0.496		0.269		0.718		0.866		0.098		0.245
45		0.654		0.414		0.788		0.861		0.783		0.805
46		0.028		0.318		0.215		0.444		0.436		0.945
47		0.382		0.807		0.856		0.571		0.916		0.385
48		0.603		0.114		0.825		0.812		0.432		0.727
49		0.753		0.381		0.918		0.817		0.555		0.753
50		0.424		0.461		0.505		0.676		0.645		0.576

Table 7-1 (continued)

	Mix Type	*0*	*Mix Type*	*1*	*Mix Type*	*2*	*Mix Type*	*3*	*Mix Type*	*4*	*Mix Type*	*5*
51		0.857		0.547		0.737		0.569		0.628		0.739
52		0.561		0.016		0.070		0.599		0.633		0.320
53		0.605		0.544		0.375		0.230		0.309		0.827
54		0.161		0.691		0.435		0.857		0.162		0.576
55		0.909		0.789		0.876		0.780		0.346		0.840
56		0.081		0.496		0.122		0.687		0.406		0.471
57		0.017		0.455		0.957		0.535		0.312		0.929
58		0.576		0.208		0.344		0.074		0.577		0.423
59		0.639		0.598		0.720		0.361		0.354		0.199
60		0.261		0.883		0.381		0.448		0.138		0.983
61		0.805		0.795		0.075		0.293		0.169		0.800
62		0.085		0.797		0.771		0.758		0.226		0.619
63		0.403		0.371		0.174		0.486		0.088		0.527
64		0.207		0.255		0.838		0.737		0.027		0.704
65		0.388		0.703		0.899		0.064		0.205		0.284
66		0.422		0.363		0.355		0.164		0.674		0.165
67		0.094		0.679		0.671		0.074		0.045		0.952
68		0.223		0.693		0.104		0.959		0.572		0.545
69		0.003		0.661		0.888		0.278		0.378		0.567
70		0.312		0.632		0.222		0.932		0.399		0.640
71		0.833		1.000		0.449		0.563		0.337		0.214
72		0.254		0.034		0.488		0.191		0.559		0.829
73		0.341		0.259		0.402		0.186		0.438		0.542
74		0.013		0.336		0.686		0.299		0.088		0.328
75		0.134		0.534		0.990		0.550		0.613		0.825
76		0.029		0.694		0.854		0.879		0.160		0.533
77		0.833		0.436		0.240		0.024		0.135		0.521
78		0.784		0.472		0.459		0.027		0.810		0.629
79		0.327		0.157		0.194		0.035		0.110		0.365
80		0.185		0.259		0.685		0.124		0.089		0.867
81		0.750		0.435		0.459		0.684		0.999		0.413
82		0.090		0.044		0.524		0.953		0.231		0.178
83		0.526		0.651		0.837		0.533		0.562		0.343
84		0.617		0.777		0.495		0.725		0.056		0.777
85		0.943		0.140		0.396		0.526		0.647		0.840
86		0.651		0.727		0.030		0.780		0.789		0.138
87		0.778		0.845		0.073		0.532		0.586		0.343
88		0.820		0.607		0.730		0.949		0.358		0.909
89		0.242		0.468		0.703		0.734		0.871		0.647
90		0.194		0.084		0.813		0.808		0.243		0.020
91		0.878		0.255		0.359		0.270		0.297		0.118
92		0.863		0.966		0.615		0.577		0.077		0.418
93		0.864		0.184		0.410		0.226		0.953		0.021
94		0.281		0.033		0.975		0.728		0.278		0.269
95		0.741		0.990		0.133		0.469		0.609		0.369
96		0.635		0.676		0.988		0.719		0.227		0.963
97		0.313		0.339		0.637		0.719		0.845		0.678
98		0.642		0.894		0.367		0.664		0.943		0.801
99		0.207		0.795		0.879		0.127		0.275		0.703
100		0.686		0.097		0.005		0.883		0.848		0.378

QC 9 Revised 12/1/2004

North Carolina Department of Transportation

QC Random Sample Worksheet

Contractor Quality Paving Co., Inc. **Plant Location** Everywhere, NC **Mix Type** I 19.0 B **Mix Design No.** 10-248

Today's Date	Projected Tonnage	Sample Number	Random Number (A)	Increment Tons (B)	C = A x B (C)	Previous Increment Tons (D)	Sample Tonnage E = D + C (E)	End of Last Day's Tonnage (F)	Tons to Today's 1st Sample * G = E - F (G)	Date Sample Taken (H)	Accum. Tonnage @ End of Today (I)	**QC Technician signature
11/8/2007	300	10-1	0.245	750	184	0	184	0	184	11/8	375	
11/9/2007	2200	10-2	0.539	750	404	750	1154	375	779	11/9	-----	
11/9/2007	2200	10-3	0.623	750	467	1500	1967	-----	-----	"	2025	
11/12/2007	900	10-4p1	0.370	750	278	2250	2528	2025	503	11/12	2175	
11/13/2007	300	10-4p2	0.370	750	278	2250	2528	2175	353	11/13	2300	
11/16/2007	600	10-4	0.370	750	278	2250	2528	2300	228	11/16	-----	
11/16/2007	600	10-5	0.732	750	549	3000	3549	"			2950	
								2950				

* If the next regularly scheduled sample tonnage for an increment is not reached, this will be the tonnage remaining from the end of the last day's tonnage to the first sample tonnage the next production day.

NOTE: This form to be completed and faxed to appropriate QA Supervisor prior to production of each mix design each day. Original maintained at QC Lab.

** By providing this data under my signature and/or HICAMS certification number, I attest to the accuracy and validity of the data contained on this form and certify that no deliberate misrepresentation of test results, in any manner, has occurred.

7.3.2 Sample Location for Aggregates, RAP, & RAS

Aggregate samples shall be taken from either the stockpiles or the cold feed system and washed gradations performed at the frequencies specified below:

A. Coarse Aggregates (approved standard sizes) *Split samples not required*
   1. At beginning of production
   2. Weekly thereafter
B. Fine Aggregates (stone screenings, natural sands, etc.) *Split samples not required*
   1. At or within 1 week prior to mix verification (Gradations Valid for Multiple Mix Designs),
   2. Anytime production is stopped due to plant mix gradation related problems,
   3. Weekly after mix verification
C. Reclaimed Asphalt Pavement (RAP) and Reclaimed Asphalt Shingles (RAS) *Split samples required*
   1. Moisture at beginning of production and daily during production
   2. Gradations at beginning of production and weekly thereafter

      NOTE: Daily moisture calculations (weights and percentages) shall be recorded on an acceptable format.

In lieu of the beginning of production gradations on coarse aggregates and the weekly required gradations on both coarse and fine aggregates, the Contractor may furnish gradation quality control data conducted by the aggregate producer, which is representative of the Contractor's current stockpiles.

The weekly requirement for aggregate, RAP and RAS is defined as a calendar week unless there has been no production during that calendar week. The Contractor must maintain records of all aggregate, RAP, and RAS stockpile gradations and furnish these upon request to QA personnel. Maintain at the plant site a record system for all approved RAP stockpiles. Include at a minimum the following: Stockpile identification and a sketch of all stockpile areas at the plant site; all RAP test results (including asphalt content, gradation, and asphalt binder characteristics). All mix samples taken must be reported on the QC-1 Form by the beginning of the next work day after the sample(s) is taken, not to exceed 1 calendar day.

7.4 MIX VERIFICATION, JMF ADJUSTMENTS, AND CORRECTIVE ACTION PROCEDURES

All forms referred to in this Section have detailed instructions in Section 12.

7.4.1 Mix Verification Requirements

The Contractor shall conduct field verification of the mix at each plant within 45 calendar days prior to initial production of each mix design, when required by the Allowable Mix Adjustment policy and when directed as deemed necessary. Prior to beginning mix verification, the Contractor shall ensure that all preliminary inspections and plant calibrations are either current or performed as indicated on the QC-11 form. The contractor must repeat the mix verification if the initial QC full-test series does not occur within 45 days of the initial verification. Mix obtained from NCDOT or non-NCDOT work may be used for verification purposes provided it is sampled, tested, and the test data handled in accordance with current procedures in this manual and the following provisions. If non-NCDOT mix is used, the appropriate QA Lab should be notified prior to performing the sampling and testing.

Mix verification tests for Asphalt Mixes will consist of those required on the QC-11 form which includes recovered aggregate gradation, binder content, dust-to-binder ratio, Maximum Specific Gravity (G_{mm}), Gyratory Bulk Specific Gravity (G_{mb}@N_{des}), Gyratory printouts for N_{des} gyrations, VTM, VMA, VFA, %G_{mm}@N_{ini} calculations, cold feed blend calibration and moisture content (if required). Other preliminary inspections, calibrations, aggregate stockpile washed gradations, RAP and RAS binder content and gradations (if applicable), are required to be current and on file at the Contractor's QC Lab. Satisfactory verification shall be when all volumetric properties meet the applicable mix design criteria except the gradation, binder content and %G_{mm}@N_{ini} are within the individual test limits for the mix type being produced.

Verification is considered satisfactory for Warm Mix Asphalt (WMA) when all volumetric properties except %G_{mm}@N_{ini} are within the applicable mix design criteria, the TSR is equal to or above the minimum design criteria, and the gradation, binder content, and %G_{mm}@N_{ini} are within the individual limits for the mix type being produced.

A 200 pound sample of mix shall be taken for mix verification testing. This 200 pound shall be quartered, bagged, tagged, and the QA and referee portions retained until either procured by or disposal permission is given by QA personnel. Plant production shall not begin until all QC field verification test results have been completed and the mix has been satisfactorily verified by the Contractor's Level II technician. In addition, QC shall retain records of these calibrations

and mix verification tests and furnish copies (as required on the QC-11 form) to the Engineer for review and approval within one working day after beginning production of that mix. Failure by the Contractor to fully comply with the above mix verification requirements shall result in immediate production stoppage by the Engineer. Production of that mix shall not resume until all mix verification sampling and testing, calibrations, and plant inspections have been performed and approved by the Engineer. Any mix produced that is not verified may be assessed a price reduction at the discretion of the Engineer in addition to any reduction in pay due to mix or density deficiencies.

The initial mix verification of all new mix designs shall be conducted with the plant set up to produce the aggregate blend and binder content in accordance with the initial JMF, unless otherwise approved by the Engineer. If QC test results indicate that adjustments to the aggregate blend and/or binder content are necessary to obtain the desired volumetric properties, QC adjustments as deemed necessary may be made prior to any mix production to the project. After these adjustments are made, all related test results and data substantiating the change must be furnished to the appropriate QA Supervisor, including the gyratory specimen printouts and the 0.45 power chart with the original and proposed blend gradations plotted if any blend / gradation change is being requested. The QA supervisor will furnish this data to the Asphalt Design Engineer for approval, prior to production of that mix. In addition, all test results and data for the initial mix verification (with the plant set up to produce the initial aggregate blend and binder content) shall also be furnished at that time.

If the Contractor and/or the Division QA Supervisor determine from results of quality control tests conducted during verification that adjustments to the JMF are necessary to achieve the specified mix properties, adjustments to the JMF may be made within the tolerances permitted by the specifications for the particular mix type being produced. All Contractor requested JMF adjustments must be approved by the Asphalt Design Engineer and documented in writing before the new mix is produced for a NCDOT project. If these mix adjustments achieve the desired mix properties, the Asphalt Design Engineer will be contacted by the Division QA Supervisor for this approval and issuance of a revised JMF.

The Contractor shall maintain records of all mix verification tests, calibrations and plant checks. Failure to have results available may require additional mix verification tests prior to production of a mix.

7.4.2 Allowable Mix Adjustments

Listed below are allowable mix adjustments during normal production, the extent of these adjustments allowed, and designation as to who is authorized to make and/or approve these changes. These allowable adjustments only apply during normal production of asphalt mixes. (See Section 7.4.1 above for allowable changes during the plant mix verification process). **Any mix placed without a properly approved Job Mix Formula will be subject to removal.**

A. Mix Changes Allowed By QC without Prior QA Lab Approval **(QA Notification Required)**.
   1. Cold feed blend change of ± 10% or less from the original JMF target blend percentage per aggregate. (Deletion of a sole source aggregate is not allowed). Blend changes to RAP/RAS are not allowed.
   2. Change in source of asphalt binder. All binder grades must come from sources certified under the Department's PG Asphalt Binder QC/QA Program (proper delivery documents are required).
   3. Addition of new source recycled product. Gradation & binder content meet Table 1012-4 of the Standard Specifications and all mix properties of mix with new recycled product meet all Specification requirements.

NOTE: Above changes shall be documented by QA & QC and will not require a change in the JMF Number, but a comment will be made to the JMF.

B. Mix Changes Allowed By QA Lab without Asphalt Laboratory's Prior Approval.
   1. Change in JMF mixing temperature of up to plus or minus 15°F (8°C).
   2. Addition or deletion of a same source aggregate to better control mix properties (JMF change required).

C. Mix Changes Allowed With Asphalt Pavement Specialist's Approval.
   1. Addition of new source RAP if gradation & binder content do not meet Table 1012-4 of Standard Specifications.
   2. Change of JMF Control Data
      a. Gradation requirements
      b. G_{mm}, G_{mb}, G_{sb}, or G_{se}
      c. % asphalt binder content change of ± 0.1 – 0.5 % from original JMF target.

NOTE: For mixes where the percent of binder contributed from RAS or a combination of RAS and RAP exceeds 30% of the total binder in the mix, a percent virgin asphalt binder content reduction of up to 0.2% can be made. Percent minimum VMA in the mix is required and approved methods will be referenced to determine if an increase in percent recycled contributed binder from the original JMF will be allowed.

3. Per aggregate cold feed blend change of 10 – 15 % of original JMF target.
4. Any change in anti-strip source, brand, or dosage.
   Note: Anti-Strip changes must have passing TSR's
5. Any % RAP/RAS change from original JMF target.
6. Change in JMF mixing temperature greater than plus or minus 15°F (8°C).
7. Deletion of a sole source aggregate

D. Mix Changes Only Allowed with Asphalt Design Engineer's Approval.
1. % asphalt binder content change of greater than 0.5 % from original JMF target.

NOTE: For mixes where the percent of binder contributed from RAS or a combination of RAS and RAP exceeds 30% of the total binder in the mix, a percent virgin asphalt binder content reduction of up to 0.2% can be made. Percent minimum VMA in the mix is required and approved methods will be referenced to determine if an increase in percent recycled contributed binder from the original JMF will be allowed.

2. Per aggregate cold feed blend change greater than ±15 % of original JMF target.
   (A 0.45 power chart with original and new gradations may be required)
3. Grade of asphalt binder being used.
4. Any change of the level of a mix type; i.e., S12.5D to a S12.5C or vice versa.

NOTES:
1. Items C.1 thru C.3 or D.1 thru D.3 require mix verification prior to normal production*
2. If Items C.4 or D.5 occurs, a TSR shall be required prior to normal production*
3. All items above may require rut testing prior to approval of mix change*
4. Notify appropriate QA Supervisor of ALL requests for mix changes.

***Unless otherwise approved by the Asphalt Design Engineer or his representative.**

7.4.3 Control Charts (QA/QC-6 Form):

Standardized control charts shall be maintained by the Contractor at the Quality Control field laboratory on forms furnished by the Department or produced and stored using the NCDOT QAP program. For mix incorporated into the project, record full test series data from all regularly scheduled random samples, or directed samples which replace regularly scheduled samples, on control charts the same day the tests results are obtained. Partial test series results obtained due to reasons outlined in Subarticle 609-6(B) will be reported to Quality Assurance personnel on the proper forms, but will not be plotted on the control charts. Process Control (PC) samples which are taken within an increment other than regularly scheduled random samples or directed samples that do not replace the scheduled random sample will not be plotted on control charts nor reported to Quality Assurance Laboratory Personnel.

Results of quality assurance tests performed by the Engineer will be posted on the Contractor's control charts as data becomes available. The following data shall be recorded on standardized control charts:

1. Aggregate Gradation Test Results:
   a. For each mix type: one sieve size smaller than the mix nominal maximum size.
   b. For all mix types: 2.36 mm and 0.075 mm sieves
2. Binder Content, ($\%P_b$)
3. Bulk Specific Gravity of Compacted Specimens ($G_{mb}@N_{des}$) (NCDOT-T-166 OR NCDOT-T-331)
4. Maximum Specific Gravity, (G_{mm}) (NCDOT-T-209 OR NCDOT-D-6857)
5. Percent Voids in Total Mix, (VTM)
6. Percent Voids in Mineral Aggregate, (VMA)
7. Dust / Effective Binder Ratio, ($P_{0.075}/P_{be}$)
8. Percent Maximum Specific Gravity at N_{ini} gyrations, ($\%G_{mm}$ @ N_{ini})

Both the full test series individual test values and the moving average of the last four (4) data points will be plotted on each chart. The Contractor's individual test data will be shown in black and the moving average in red. The Engineer's assurance data will be plotted in blue. Denote moving average control limits with a dash green line, and individual test limits with a dash red line (See example Control Chart on page 7-25).

The moving average(s) shall be continuous except that a new moving average(s) shall be re-established only when:

1. Change in the binder percentage, aggregate blend or G_{mm} is made on the JMF, or
2. When the Contractor elects to stop or is required to stop production after one or two moving average values, respectively, fall outside the control limits outlined in Subarticle 609-6(D).
3. Failure to stop production after two consecutive moving averages exceed the moving average limit~~s~~ occurs, but production does stop at a subsequent time, re-establish a new moving average beginning at the actual production stop point.

In these cases re-establish the moving averages for all mix properties. Moving averages will not be re-established when production stoppage occurs due to an individual test result exceeding the individual test limits and/or specifications.

NOTE: New Moving Averages will be established at the beginning of each calendar year.

All individual test results for randomly scheduled or directed samples that replace randomly scheduled samples are part of plant quality control records and must be included in moving average calculations with the following exception. When the Contractor's testing data has been proven incorrect, use the correct data as determined by the Engineer in lieu of the Contractor's data in accordance with Subarticle 609-6(E). In this case, replace the data in question and any related data proven incorrect.

7.4.4 Control Limits:

The following are established as control limits for mix production. The individual limit shall apply to the individual test results. Control limits for the moving average limits are based on a moving average of the last four (4) data points. Apply all control limits to the applicable target source.

Table 609-1
Control Limits

Mix Control Criteria	Target Source	Moving Average Limit	Individual Limit
2.36mm Sieve	JMF	±4.0 %	±8.0 %
0.075mm Sieve	JMF	±1.5 %	±2.5 %
Binder Content	JMF	±0.3 %	±0.7 %
VTM @ N_{des}	JMF	±1.0 %	±2.0 %
VMA @ N_{des}	Min. Spec. Limit	Min. Spec. Limit	-1.0 %
$P_{0.075}$/ P_{be} Ratio	1.0	±0.4	±0.8
%G_{mm} @ N_{ini}	Max. Spec. Limit	N/A	+2.0 %
TSR	Min. Spec. Limit	N/A	- 15 %

7.4.5 Corrective Actions

All required corrective actions are based upon initial test results and must be taken immediately upon obtaining those results. In the event situations occur which warrant more than one corrective action and/or adjustment, give precedence to the more severe of these actions. Stopping production when required takes precedence over all other corrective actions. All corrective actions shall be documented. QC personnel will not be held retroactively responsible for any actions that would have been required as a result of replacement of QC data by Quality Assurance.

A. Individual Test Exceeding Individual Test Limits

When any of the following occur, production of a mix shall cease immediately:

1. An individual test result for a mix control criteria (including results for required partial test series on mix) exceeds both the individual test control limits and the applicable specification design criteria, or,
2. Two consecutive field TSR values fail to meet the minimum specification requirement, or,
3. Two consecutive binder content test results exceed the individual limits.
4. Two consecutive moving average values for any one of the mix control criteria fall outside the moving average limits.

Production of the mix in question shall not resume until one of the following has occurred:

Option 1: Approval has been granted by the appropriate QA Supervisor.

Option 2: The mix in question has been satisfactorily verified in accordance with Article 609-3. Normal production may resume based on the approval of the contractor's Level II technician, provided notification and the verification test results have been furnished to the QA Lab.

Failure to fully comply with any of the above corrective actions will result in immediate production stoppage by the Engineer. Normal production shall not then resume until a complete verification process has been performed and approved by the Engineer.

Acceptance of all mix failing to meet the individual test control limits (including results for both full and partial test series on mix) or minimum TSR requirements as described above will be determined in accordance with Article 105-3. In addition, any mix, which is obviously unacceptable, will be rejected for use in the work.

Failure to stop production when required due to an individual test(s) not meeting the specified requirements shall subject all mix from the stop point tonnage to the point when the next individual test is back on or within the moving average limits, or to the tonnage point when production is actually stopped, whichever occurs first, to be considered unacceptable. Failure to stop production when required due to two consecutive TSR tests failing to meet the specification requirements shall subject all mix from the stop point tonnage to the point when the next TSR test meets or exceeds specification requirement, or to the tonnage point when production is actually stopped, whichever occurs first, to be considered unacceptable. In either case, this material shall be removed and replaced with materials, which comply with the specifications. Payment will be made for the actual quantities of materials required to replace the removed quantities, not to exceed the original amounts.

B. Moving Average Exceeding Moving Average Limits

The Contractor shall immediately notify the Engineer whenever moving average values exceed the moving average limits.

If two consecutive moving average values for any one of the mix control criteria fall outside the moving average limits, the Contractor shall cease production of that mix and make adjustments. The Contractor may elect to stop production after only one moving average value falls outside the moving average limits. In either case, a new moving average shall not be determined until the fourth test after the elective or mandatory stop in production. Production of the mix in question shall not be resumed until one of the following has occurred:

Option 1: Approval has been granted by the appropriate QA Supervisor.

Option 2: The mix in question has been satisfactorily verified in accordance with Article 609-3. Normal production may resume based on the approval of the contractor's Level II technician, provided notification and the verification test results have been furnished to the QA Lab.

Failure to fully comply with one of the above provisions will result in immediate production stoppage by the Engineer. Normal production shall not then resume until a complete verification process has been performed and approved by the Engineer.

If the process adjustment improves the property in question such that the moving average after four additional tests is on or within the moving average limits, the Contractor may continue production with no reduction in payment.

If the adjustment does not improve the property in question such that the moving average after four additional individual tests is outside the moving average limits, the mix shall be evaluated for acceptance in accordance with Article 105-3. Reduced payment for or removal of the mix in question will be applied starting from the plant sample tonnage at the stop point to the sample tonnage when the moving average is on or within the moving average limits. In addition, any mix which is obviously unacceptable will be rejected for use in the work.

Failure to stop production and make adjustments as described above due to two consecutive moving average values falling outside the moving average limits shall subject all mix produced from the stop point tonnage to the tonnage point when the moving average is back on or within the moving average limits or to the tonnage point when production is actually stopped, whichever occurs first, to be considered unacceptable. This material shall be removed and replaced with materials, which comply with the specifications, unless otherwise approved by the Engineer. Payment will be made for the actual quantities of materials required to replace the removed quantities, not to exceed the original amounts.

QA/QC-6 (SP)

North Carolina Department of Transportation

Hot Mix Asphalt Quality Control Chart

Type Mix: RS 9.5 B | Contractor: Excellent Paving Co. | Mix Parameter: 0.075mm

JMF No: 09-001-151 | Plant Location: Quality, NC | JMF Target: 4.0

Year: 20 10

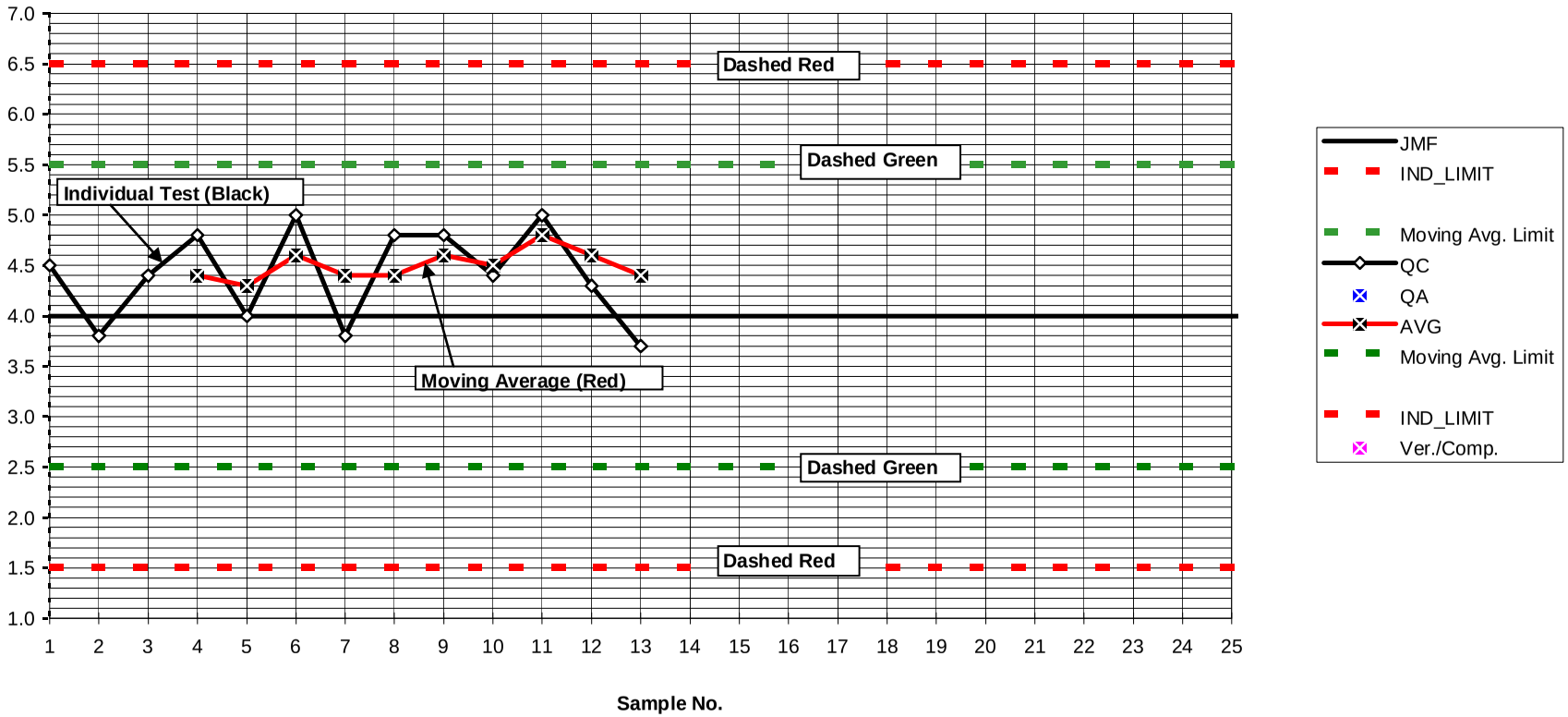

7.5 SAMPLING PROCEDURES

7.5.1 Aggregate, RAP, and RAS Sampling

Since the reason for sampling aggregates is to determine the gradation, it is necessary that they be sampled correctly. The results of a sieve analysis should reflect the condition and characteristics of the aggregate from which the sample is obtained. Therefore, when sampling, it is important to obtain a representative sample. Unless it is truly representative, tests apply to the sample only and not to the entire aggregate shipment or stockpile. Accuracy in sampling is equally as important as accuracy in testing.

Sampling methods will be as specified in AASHTO T 2. Sample sizes shall be at least 10 lbs. for fine aggregates and 25 lbs. for coarse aggregates, RAP, and RAS. Samples of RAP and RAS shall be mixed and quartered as specified in "Reduction of Samples to Testing Size" below. Split aggregate samples are not required, however, split RAP and RAS samples are required.

In many cases, a representative sampling cannot be obtained by a single sample. Multiple samples may be necessary to obtain a true picture of the properties of a stockpile or source of material. As the maximum particle size in the aggregate increases, the size of the sample must increase to maintain accuracy in testing. In addition, the number and types of tests determine the size sample needed.

There are four principal aggregate sampling points that are of concern at an asphalt plant. These are (1) the source of materials, (2) the stockpile, (3) the cold feed and (4) the hot storage bin at a batch plant. When sampling at the source of materials, it would be well to remember one general rule. It is easier to obtain a representative sample from the production stream, such as from the conveyor belt, than from trucks, storage bins or stockpiles. However, if the sample is taken from the conveyor belt, it must be removed from the entire cross-section of the belt. The same would be true when sampling from the chutes of cold feeders or hot bins at batch plants.

Getting a sample from a stockpile is not easy, and great care must be taken to obtain a truly representative sample. Segregation usually occurs when the material is stockpiled, because the coarser particles will roll to the base of the pile. If a stockpile of sand is to be sampled, it is usually only necessary to remove the dry layer where the segregation occurs and sample the damp material below. Samples of coarse aggregates from stockpiles should be taken at or near the top and base, and at a number of locations in the stockpile. To prevent further segregation while sampling, a board may be shoved into the pile just above the sampling area. Another method of sampling coarse aggregate materials would be to expose the face of the stockpile from the top to the bottom, with a front end loader. The samples could then be taken from the exposed face. Another method would be to have the front end loader take a scoop from bottom to top and dump the material in a convenient location for sampling. The sample bag could then be filled from various locations around the scoop of material. Fine aggregate may also be sampled with a sampling tube approximately 1-1/4 in. in diameter and 6 ft. long.

A sample of coarse or fine aggregate may be obtained by passing a container through the complete flow of that particular material under the cold storage bins. If stockpile variation is to be determined, samples should be taken at various points and tested separately. The outer layer of the stockpile should be pushed aside and not included in the sample because it may have dried and become segregated. In sampling coarse aggregate, a board may be pushed into the pile at this point and the sample taken below the board. This should be done near the top, middle and bottom of coarse aggregate stockpiles and then the three samples blended. When sampling local sands from pits or proposed pits, using some type of auger, it is desirable to retain different strata as separate samples.

7.5.2 Numbering of Mix Samples

The numbering of all samples shall be the responsibility of the Contractor's QC personnel. QC sample numbers shall be assigned to all samples taken for mix that will be incorporated into a QMS project. This QC sample number shall also be assigned to all related samples and tests. A separate series of numbers will be maintained for each mix design for each plant location. Each series of numbers will begin with the first sample taken for each mix design at each plant location and will progress in sequential order until the end of the calendar year. A new number series and accumulative tonnage will start over at the beginning of production each calendar year.

The sample numbers will be assigned to full test series as follows. The first two digits will be the last two numbers of the current calendar year followed by a dash (-), followed by a sequence number beginning with one and progressing in numerical order as samples are taken. For example: 12-1 and 12-2 would be the first two samples taken in 2012 for a particular mix design at a particular plant location.

Partial test series mix samples will be numbered with the same number as the full test series sample number for that increment, except it will be followed by a P1 for the first partial test within a test increment, P2 for the second one in the same increment, etc. For example, if two partial test samples were taken from the increment represented by sample

number 12-2 above, these partial test sample numbers would be 12-2P1 and 12-2P2. This numbering procedure applies regardless of whether or not a full test series sample has been taken for the applicable increment.

7.5.3 Sampling Mix From the Truck

Quality Control sampling will primarily be the Contractor's responsibility. QA Personnel will direct the QC technician to obtain the Verification samples. The QA technician shall be present throughout the Verification sampling process to witness procedures and will take immediate possession of the sample for transport back to the QA laboratory. If a properly certified QC technician is not available at the time of the sampling, the QA technician will obtain the sample as required. The mix sampling and splitting process shall be in accordance with the procedures covered in Sections 7.5.

A suitable sampling platform shall be provided on which the technician is able to stand and sample the material in the truck bed. It is recommended that the platform be constructed such that the truck is able to park on either side in order to prevent the technician from having to climb into the truck bed. If it is not possible for the platform to be constructed in this manner then two appropriately constructed separate platforms shall be provided or the truck required to reverse direction so that the sample may be obtained.

7.5.4 Sampling Device

The square shovel or shovel with modified sides shall be of such size and configuration that each portion of a sample can be obtained in one attempt without spilling or rolling off.

7.5.5 Sample Location in Truck

When the last batch has been dumped into the truck box, establish a point on the surface of the load, either at the high point, if some semblance of a conical shape exists, or near the middle of the truck box if the surface shows no such conical shape. Then establish at least three incremental sample points about midway between the previously established point and the sides of the truck and equally spaced around the load (see sketch).

At each of these sampling points, **remove the upper 6 - 12 inches** of mix, insert the sampling shovel or other device into the mix and extract the sample material. This sampling should begin at one of the three locations and then continue in a rotational manner in such a way as to insure that each container/bucket contains mix from each sampling point in the truck. The total full test series sample shall weigh at least 200 lbs. All partial test series samples shall weigh at least 100 lbs.

NOTE: When any sample (QC, QA, or V) is taken from the truck at the plant site, the technician shall take the mix temperature and record it on the QC-1 Form. In addition, the technician shall record the sample number ("QC-x", "V-x", etc.) and their initials on the load delivery ticket. With QA "V" samples, the temperature will be recorded in the Remarks section on the QA-1 form.

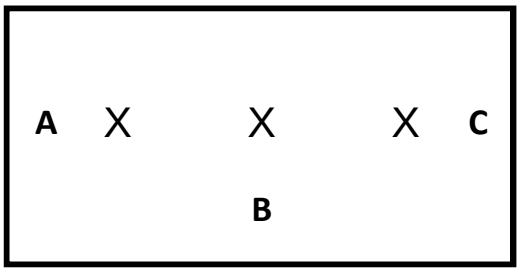

X = High Points in Truck
A = Sample Point
B = Sample Point
C = Sample Point

**IF TRUCK IS LOADED CORRECTLY THERE WILL BE THREE HIGH POINTS

7.5.6 Obtaining Mix Samples (Full and Partial Test Series)

A minimum 200 lbs. sample for a Full Test Series (or 100 lbs. for a Partial Test Series) will be taken from the truck in **4 separate** buckets. Each bucket will have approximately 50 lbs. of material for a Full Test Series (or 25 lbs. for a Partial Test Series) and each bucket shall contain material from each sampling point in the truck.

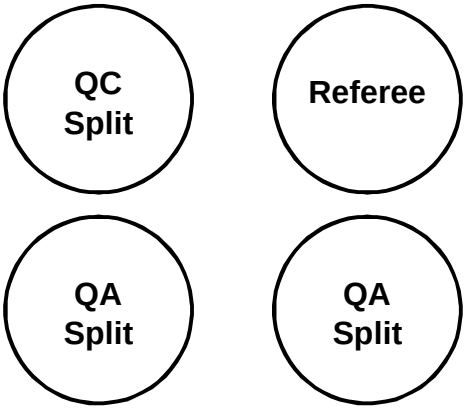

Mix = 200 lbs. Full Test Series
(approx. 50 lbs. in each bucket)

Mix = 100 lbs. Partial Test Series

The two buckets that form the QA Split sample shall be put into two separate cloth sample bags furnished by the Contractor. A white sample card (QC-7) shall be attached to the sample bag(s). This sample shall be stored by the Contractor in a safe, dry place for 7 calendar days, or until disposal permission is given by the Quality Assurance personnel, whichever occurs first.

One of the QC buckets shall be considered the Referee sample. The Referee sample shall also be put into a cloth sample bag furnished by the Contractor. An orange sample card (QC-7), shall be attached to the sample bag(s). The Referee sample shall be stored by the Contractor in a safe, dry place for a period of up to 7 calendar days, or until disposal permission is given by the Quality Assurance personnel, whichever occurs first. When the Department picks up its portion of a split sample, the matching Referee sample shall also be procured by the QA personnel. If differences exist between the QA and QC test results, the Referee sample may be tested in accordance with Section 7.20.

The remaining QC Split sample shall be reduced in size to the appropriate test samples as indicated next.

7.5.7 QC Quartering (Mix Sample for Full and Partial Test Series)

Step 1 (QC):
The remaining bucket from the Contractor's portion of the sample should be emptied onto the splitting table and shaped into a conical pile. Carefully flatten the conical pile to a uniform thickness and diameter by pressing down the apex. Divide the flattened mass into four quarters by inserting the quartering template and pressing down until the template is in complete contact with the splitting table surface. The samples for the needed tests shall then be removed from the quarters according to the following sketch:

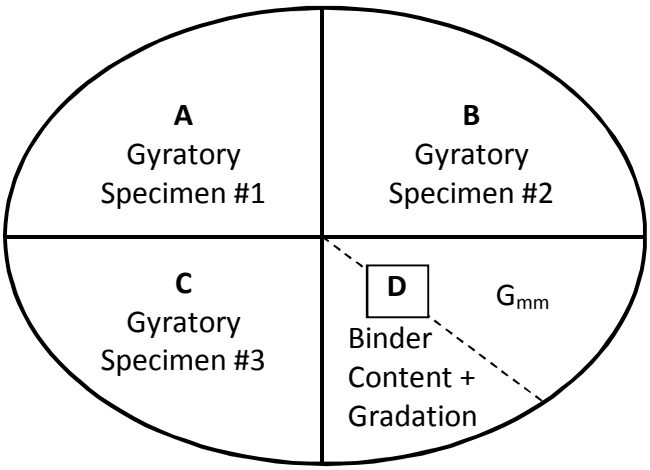

Mix for Full Test Series = 50 lbs.
Mix for Partial Test Series = 25 lbs.

Step 2 (QC):
With the quartering template in place, material from each quarter (A, B, & C) from **Step 1 (QC)** should be scooped out and used to weigh out the necessary amount of mix for compaction of each Gyratory specimen as required. Care should be taken when scooping from each quarter such that no segregation occurs. Once the necessary amount of mix needed for each specimen is removed from each quarter, any remaining material should be discarded.

Step 3 (QC):
With the quartering template still in place, material from the remaining quarter (D) from **Step 1 (QC)** shall be split again with an approved tool and one half used to weigh out the necessary amount of mix for a maximum specific gravity (G_{mm}) test sample and the other half used for a binder content & gradation test sample. Any remaining material should be discarded.

Note: For the above method of quartering to achieve proper test results, it is imperative that each bucket from **7.5.6** be filled in the rotational manner described such that each bucket contains mix from each sampling point in the truck.

7.5.8 QC Quartering (RAP or RAS Samples)
The 25 lbs. RAP or RAS sample shall be quartered by the Contractor to obtain the appropriate size sample for binder content and gradation tests. Split portions of RAP or RAS samples will be retained for a period of 7 calendar days, commencing the day the sample(s) is tested, or until disposal permission from QA personnel is given, whichever occurs first. QA personnel will also take verification RAP or RAS samples directly from the cold feed or stockpile.

7.5.9 QA Quartering (Mix Sample for Full and Partial Test Series)

Step 1 (QA):
For samples that the Engineer elects to test, the QA Split and the corresponding Referee sample shall be brought to the QA Lab. If this sample is a mix sample, reheating to a workable condition in an oven will be necessary for cold samples.

The QA Split bag should be emptied onto the splitting table and shaped into a conical pile. Carefully flatten the conical pile to a uniform thickness and diameter by pressing down the apex. Divide the flattened mass into four quarters by inserting the quartering template and pressing down until the template is in complete contact with the splitting table surface. The samples for the needed tests shall then be removed from the quarters according to the following sketch:

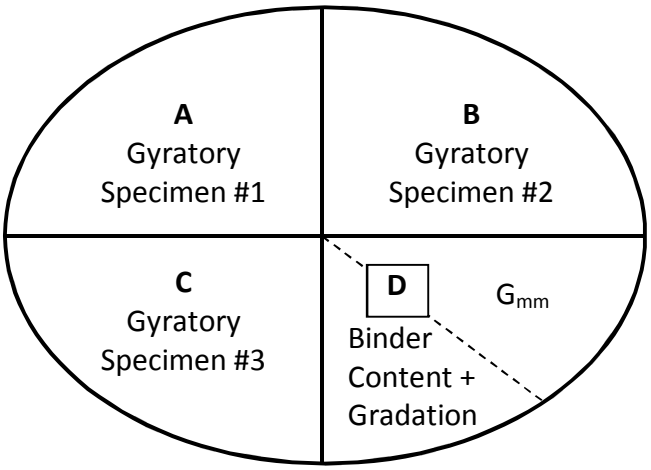

Mix for Full Test Series = 50 lbs.
Mix for Partial Test Series = 25 lbs.

The Referee sample bag will be retained for possible testing as needed.

Step 2 (QA):
With the quartering template in place, material from each quarter (A, B, & C) from **Step 1 (QA)** should be scooped out and used to weigh out the necessary amount of mix for compaction of each Gyratory specimen as required. Care should be taken when scooping from each quarter such that no segregation occurs. Once the necessary amount of mix needed for each specimen is removed from each quarter, any remaining material should be discarded.

Step 3 (QA):
With the quartering template still in place, material from the remaining quarter (D) from **Step 1 (QA)** shall be split again with an approved tool and one half used to weigh out the necessary amount of mix for a maximum specific gravity (G_{mm}) test sample and the other half used for a binder content & gradation test sample. Any remaining material should be discarded.

7.5.10 QA Quartering (Aggregates, RAP & RAS)
When aggregate, RAP or RAS samples are taken by QA personnel, the reduction of samples to testing size shall be accomplished by either using a sample splitter or the quartering method. These samples will be taken at the specified frequency for quality assurance testing.

7.6 TEST PROCEDURES - GENERAL

All test procedures utilized by the Department are generally in accordance with AASHTO or ASTM standards. Any modifications to these procedures are covered in detail in the following sections. Other test procedures may be used by the Contractor provided they are preapproved by the Department. Whenever specified tests apply to either or both the Contractor and/or Department, the same standard test procedures will be followed by each.

Procedure No.	Title	Page No.
NCDOT-T-11	Materials Finer Than 75 µm (No. 200) Sieve in Mineral Aggregates by Washing	7-27
NCDOT-T-27	Sieve Analysis of Fine and Coarse Aggregates	7-28
NCDOT-T-255	Moisture Content of Aggregate by Drying	7-30
NCDOT-T-30	Sieve Analysis of Recovered Aggregate	7-31
NCDOT-T-308	Asphalt Binder Content of Asphalt Mix by the Ignition Method	7-33
NCDOT-T-312	Superpave Gyratory Compactor Field Test Procedure	7-37
NCDOT-T-209	Maximum Specific Gravity (G_{mm}) of Asphalt Mix – Rice Method	7-40
NCDOT-D-6857	Maximum Specific Gravity (G_{mm}) of Asphalt Mix – Vacuum Sealing Method	7-42
NCDOT-T-166	Bulk Specific Gravity of Compacted Asphalt Mix – SSD Method	7-44
NCDOT-T-331	Bulk Specific Gravity of Compacted Asphalt Mix – Vacuum Sealing Method	7-46
NCDOT-T-283	Tensile Strength Ratio (TSR) Test	7-48
NCDOT-T-305	Draindown Characteristics of Uncompacted Asphalt Mix	7-53

7.7 MATERIALS FINER THAN 75 µm (No. 200) SIEVE IN MINERAL AGGREGATES BY WASHING (NCDOT-T-11) and SIEVE ANALYSIS OF FINE AND COARSE AGGREGATES (NCDOT-T -27)

These test methods cover determination of the amount of material finer than a 75 µm (No. 200) sieve in aggregate by washing and the determination of the particle size distribution of fine and coarse aggregates, by sieving. Clay particles and other aggregate particles that are dispersed by the wash water, as well as water-soluble materials, will be removed from the aggregate during the test.

7.7.1 General

A. A sample of the aggregate is washed in a prescribed manner, using water containing a wetting agent, as specified. The decanted wash water, containing suspended and dissolved material, is passed through a 75-µm (No. 200) sieve. The loss in weight resulting from the wash treatment is calculated as mass percent of the original sample and is reported as the percentage of material finer than a 75-µm (No. 200) sieve by washing.

B. This method is used primarily to determine the grading of materials proposed for use as aggregates or being used as aggregates. The results are used to determine compliance of the particle size distribution with applicable specification requirements and to provide necessary data for control of the production of various aggregate products and mixtures containing aggregates.

7.7.2 Materials Finer Than 75 µm (No. 200) Sieve In Mineral Aggregates By Washing (NCDOT-T-11)

7.7.2.1 Equipment

A. Balance - The balance or scale shall be sensitive to within 0.1 percent of the weight of the sample to be tested.

B. Sieves - A nest of two sieves, the lower being a 75 µm (No. 200) sieve and the upper being a 1.18 mm (No. 16), both conforming to the requirements of M 92.

C. Oven - The oven shall be capable of maintaining a uniform temperature of 120 - 350°F (49 - 177°C). A hot plate or electric skillet may be satisfactory if turned to a lower temperature and the aggregate stirred to prevent local overheating.

D. Container - The container (bowl) shall be of sufficient size to contain the sample covered with water and to permit vigorous agitation without any loss of material or wash water.

E. Wetting Agent - any dispersing agent such as liquid dishwashing detergent which will promote separation of the fine material.

7.7.2.2 Sample

A. Samples for sieves analysis shall be obtained from the material to be tested by the use of a sample splitter or by the method of quartering. Fine aggregate sampled by the quartering method shall be thoroughly mixed and in a moist condition. The sample for testing shall be approximately the weight desired and shall be the end result of the splitting or quartering method. **The selection of samples of an exact predetermined weight shall not be attempted**.

B. Thoroughly mix the sample of aggregate to be tested and reduce the quantity to an amount suitable for testing using the applicable methods described in T 248. If the same test sample is to be tested according to T 27, the minimum weight shall be as described in the applicable sections of that method. Otherwise, the weight of the test sample, after drying, shall conform with the following:

Nominal Maximum Aggregate Size	Minimum Weight Of Test Sample
37.5 mm or larger	5000 grams
25.0 mm	2500 grams
19.0 mm	2000 grams
12.5 mm	1500 grams
9.50 mm	1000 grams
4.75 mm	500 grams

7.7.2.3 Procedure

1) Dry the sample at 220 - 325°F (105 - 163°C) to a constant weight and determine the weight to the nearest 0.1 gram.
2) The test sample, after being dried and weighed, shall be placed in a container and covered with water. Add a sufficient amount of wetting agent to assure a thorough separation of the material finer than the 75 µm (No. 200) sieve from the coarser particles. The contents of the container shall be agitated vigorously and the wash water immediately poured over a nest of two sieves consisting of a No. 10 or No. 16 (2.00 or 1.18 mm) sieve over a 75 µm (No. 200) sieve. The use of a large spoon to stir and agitate the aggregate in the wash water has been found satisfactory.
3) The agitation shall be sufficiently vigorous to result in the complete separation of all particles finer than the 75 µm (No. 200) sieve from the coarse particles and bring them into suspension in order that they may be removed by decantation of the wash water. Care should be taken to avoid, as much as possible, the decantation of the coarse particles of the sample. The operation shall be repeated until the wash water is clear.
4) All material retained on the nested sieves shall be returned to the container. The washed aggregate in the container shall be dried to a constant weight at 220 - 325°F (105 - 163°C). The material shall then be cooled to 120°F (49°C) or less and weighed to the nearest 0.1 gram.

7.7.2.4 Report

The percentage passing the 75 µm (No. 200) sieve shall be reported to the nearest 0.1 percent. Percentages shall be calculated on the basis of the total dry weight of the sample.

7.7.3 Sieve Analysis of Fine and Coarse Aggregates (NCDOT-T-27)

7.7.3.1 Equipment

A. Balance - The balance or scale shall be sensitive to within 0.1 percent of the weight of the sample to be tested.
B. Sieves - The sieves with square openings shall be mounted on substantial frames constructed in a manner that will prevent loss of material during sieving. Suitable sieve sizes shall be selected to furnish the information required by the specifications covering the material to be tested. The woven wire cloth sieves shall conform to AASHTO M 92.
C. Sieve Shaker - a mechanical sieving device that shall create motion of the sieves to cause the particles to bounce, tumble, or otherwise turn so as to present different orientations to the sieving surface. The sieving action shall be such that the criterion for adequacy of sieving described in AASHTO T 30, Section 6.7 is met in a reasonable time period. The sieve shaker shall have a timer that will automatically control sieving time.
D. Oven - The oven shall be capable of maintaining a uniform temperature of 120 - 350°F (49 - 177°C). A hot plate or electric skillet may be satisfactory if turned to a lower temperature and the aggregate stirred to prevent local overheating.

7.7.3.2 Sample

A. Samples for sieves analysis shall be obtained from the material to be tested by the use of a sample splitter or by the method of quartering. Fine aggregate sampled by the quartering method shall be thoroughly mixed and in a moist condition. The sample for testing shall be approximately the weight desired and shall be the end result of the splitting or quartering method.
   The selection of samples of an exact predetermined weight shall not be attempted.
B. In no case shall the fraction retained on any sieve at the completion of the sieving operation weigh more than 4 g/in^2 of sieving surface.
   Note: This amounts to 450 grams for the usual 12 in. diameter sieve. The amount of material retained on the critical sieve may be regulated by:
   a. Placing a sieve with larger openings than the overloaded sieve, above that sieve
   or b. By the proper selection of the size of the sample.
C. Samples of coarse aggregate for sieve analysis shall weigh, after drying, not less than the amount indicated in the following table:

Nominal Maximum Aggregate Size	Minimum Wt. of Stockpile Sample	Minimum Wt. of Test Sample
37.5 mm	15000 grams	3000 grams
25.0 mm	10000 grams	3000 grams
19.0 mm	5000 grams	2000 grams
12.5 mm	5000 grams	1500 grams
9.50 mm	5000 grams	1200 grams
4.75 mm	5000 grams	1200 grams
Note: All gradations shall be performed using 12” diameter sieves.		

Note: The Nominal Maximum Particle Size is defined as the sieve size which is one sieve size larger than the first sieve to retain more than 10 percent of the total material.

D. In the case of mixtures of fine and coarse aggregates, the material shall be separated into two sizes on the 2.36 mm sieve and the samples of fine and coarse aggregates shall be prepared in accordance with the table above.
E. Whenever the amount of material finer than the 75 µm (No. 200) sieve is to be determined by washing, first test the sample in accordance with the steps for NCDOT-T-11 through the final drying operation.

7.7.3.3 <u>Procedure</u>

1) Dry the sample at 220 - 325°F (105 - 163°C) to a constant weight and determine the weight to the nearest 0.1 gram.
2) The test sample, after being dried and weighed, shall be tested according to NCDOT-T-11.
3) All material retained on the nested sieves shall be returned to the container. The washed aggregate in the container shall be dried to a constant weight at 220 - 325°F (105 - 163°C). The material shall then be cooled to 120°F (49°C) or less and weighed to the nearest 0.1 gram.
4) The aggregate shall then be sieved over sieves of various sizes required by the specification covering the material to be tested, including the 75 µm (No. 200) sieve. Nest the sieves in order of decreasing size of opening from top to bottom and place the sample on the top sieve.
5) Agitate the sieves by hand or by mechanical apparatus for a period of 10 minutes. The sieving operation shall be conducted by means of a lateral and vertical motion of the sieve, accompanied by jarring action so as to keep the sample moving continuously over the surface of the sieve. In no case shall fragments in the sample be turned or manipulated through the sieve by hand.
   Note: It is important to limit the quantity of material on a given sieve so that all particles have opportunity to reach sieve openings a number of times during the sieving operation. If overloading of a sieve is suspected, the sieving adequacy should be checked as per the requirements of AASHTO T 27, Sections 8.3 and 8.4.
6) Determine the weight of each size increment by weighing on a balance. The total weight of the material after sieving should check closely with the original weight of the sample placed on the sieves.
7) If the sample has previously been tested by NCDOT-T-11, add the weight finer than the 75 µm (No. 200) sieve determined by that method to the weight passing the 75 µm (No. 200) sieve by dry sieving of the sample.

7.7.3.3 <u>Report</u>

The results of the sieve analysis shall be reported as total percentages passing each sieve. Final percentages shall be reported to the nearest whole number, except the percentage passing the 75 µm (No. 200) sieve shall be reported to the nearest 0.1 percent. Percentages shall be calculated on the basis of the total dry weight of the sample. The QA/QC-1 form shall be used to report sieve analysis of coarse and fine aggregates.

7.8 MOISTURE CONTENT OF AGGREGATE BY DRYING (NCDOT-T-255)

Since aggregate in a drum mix operation, unlike that of a batch operation, is weighed before drying, moisture content of the aggregate must be determined. The weighing of aggregate and the metering of asphalt binder are interlocked electronically in drum mix operations. To ensure proper metering of asphalt binder, adjustments for aggregate, RAP, and RAS moisture must be made. The moisture content should be determined and proper allowance made for the water content, prior to mixing.

7.8.1 General

A. Moisture determination shall be performed prior to starting of mixing and subsequently thereafter as changes occur in the condition of the aggregate. **A minimum of one (1) moisture test per day's operation shall be performed by the QC technician at a drum mix plant operation**. Additional tests should be made when conditions in the stockpiles or supply change.

B. Calculations of the percent moisture in the aggregate, RAP, and RAS samples will be to the nearest 0.1 percent (x.x). To determine moisture content, it is necessary to secure a representative sample of the aggregate. The size of the sample taken is determined by the nominal maximum aggregate size of the material. Regardless of the size of the aggregate, the procedure for making a moisture determination is basically the same.

Note: It is easier to obtain a representative sample from the production stream, such as from the conveyor belt, than from storage bins or stockpiles. When the sample is taken from the conveyor belt, it should be removed from the entire cross-section of the belt for a minimum of two (2) feet.

7.8.2 Equipment

A. Balance - the balance shall have sufficient capacity, be readable to 0.1 percent of the sample weight, or better, and conform to the requirements of AASHTO M 231.

B. Oven - a ventilated oven of appropriate size capable of maintaining a uniform temperature of 120 - 350°F (49 - 177°C). A hot plate or electric skillet may be satisfactory if turned to a lower temperature and the aggregate stirred to prevent local overheating.

7.8.3 Sample

Obtain a representative sample of the material from the stockpile or production line (conveyor belt) and having a minimum weight as shown below:

Nominal Maximum Aggregate Size	Minimum Weight of Sample
37.5 mm	6000 grams
25.0 mm	4000 grams
19.0 mm	3000 grams
12.5 mm	2000 grams
9.50 mm	1500 grams
4.75 mm	500 grams

7.8.4 Procedure

1) Determine the weight of the sample to the nearest 0.1 gram. **[Wet Weight]**
2) Dry the sample to a constant weight at 220 - 325°F (105 - 163°C) in the sample container by means of the selected source of heat, exercising care to avoid loss of any particles. Very rapid heating may cause some particles to explode, resulting in loss of particles. Use a controlled temperature oven when excessive heat may alter the character of the aggregate, or where more precise measurement is required. If a hot plate or electric skillet is used, stir the sample during drying to accelerate the operation and avoid localized overheating.
3) The material shall then be cooled to 120°F (49°C) or less and weighed to the nearest 0.1 gram. **[Dry Weight]**
4) Determine the moisture content of the sample. The percent moisture is determined by the following formula:

$$\% \, Moisture = \frac{(Wet\ Weight - Dry\ Weight)}{Dry\ Weight} \times 100$$

Example: Wet Weight = 1225.0 grams
Dry Weight = 1175.0 grams

$$\% \, Moisture = \frac{(1225.0 - 1175.0)}{1175.0} \times 100 \; = \; \mathbf{4.3}\%$$

7.8.5 Report

Report results to nearest 0.1% (x.x). Moisture content results should be maintained as a part of the QC or QA Lab records.

7.9 SIEVE ANALYSIS OF RECOVERED AGGREGATE (NCDOT-T-30)

This test method outlines the procedure for determination of particle size distribution of aggregate recovered from asphalt mixtures and RAP/RAS materials. The results of this procedure are used to determine compliance of the gradation of the recovered aggregates with applicable specification requirements.

7.9.1 General

A. Washed gradations will be performed on the recovered aggregate from the mix and individual RAP samples.
B. Final calculations of the percent passing each sieve size will be to the nearest whole number except that the 75 µm (No. 200) sieve will be to the nearest 0.1 percent (x.x).

7.9.2 Equipment

A. Balance - the balance shall have sufficient capacity, be readable to 0.1 percent of the sample weight or better, and conform to AASHTO M 231.
B. Sieves - the sieves with square openings shall be mounted on substantial frames constructed in a manner that will prevent loss of material during sieving. Suitable sieve sizes shall be selected to furnish the information required by the specifications covering the material to be tested. The woven wire-cloth sieves shall conform to AASHTO M 92.
C. Oven - an oven of sufficient size, capable of maintaining a uniform temperature of 120 - 350°F (49 - 177°C).
D. Mechanical Sieve Shaker - a mechanical sieving device that continually reorients the particles on the sieving surface. The sieving action shall meet the requirements for sieving adequacy described in AASHTO T 30 in a reasonable time period. The sieve shaker shall have a timer that will automatically control sieving time.
E. Wetting Agent - any dispersing agent, such as dishwashing detergent, that will promote separation of the fine materials.
F. Container - a pan or vessel of a size sufficient to contain the sample covered with water and to permit vigorous agitation without loss of any part of the sample or water.
G. Spoon or Mixing Utensil - or similar device for agitating the sample during the washing procedure.

Note: The use of a mechanical apparatus to perform the washing operation is allowable, provided the results are consistent with those obtained using manual operations. The use of some mechanical washing equipment with some samples may cause degradation of the sample. Any mechanical washing apparatus must meet the requirements of AASHTO T 30.

7.9.3 Sample

The sample shall consist of the entire sample of aggregate obtained according NCDOT-T-308. The material shall be cooled to 120°F (49°C) or less.

Note: If more than 24 hours pass between the completion of T 308 and the beginning of this test procedure, or if the sample has been stored in a high-humidity environment, or has otherwise been subjected to moisture, the sample should be dried again to constant weight.

7.9.4 Procedure

1) Dry the sample, if necessary, until further drying at 220 - 325°F (105 - 163°C) does not alter the weight by more than 0.1 percent.
2) Determine and record the weight of the sample to the nearest 0.1 gram.
3) Place the test sample in a container and cover it with water. Add a sufficient amount of wetting agent to assure a thorough separation of the material finer than the 75 µm (No. 200) sieve from the coarser particles. Add the wetting agent. Agitate the contents of the container vigorously and immediately decant the wash water over a nest of two sieves consisting of a 2.00 mm (No. 10) or 1.18 mm (No. 16) sieve superimposed on a 75-µm (No. 200) sieve. The use of a large spoon or similar device is recommended to aid the process of agitating the contents of the container.

   Note: Add enough wetting agent to produce a small amount of suds when the sample is agitated. The quantity will depend on the hardness of the water, the quality of the detergent, and the agitation process. Excessive suds may overflow the sieves and carry some material with them.
4) Use care to avoid, as much as possible, the decantation of the coarse particles of the sample onto the sieve nest. Do not overflow or overload the 75 µm (No. 200) sieve. **Repeat the operation until the wash water is clear.** Return all material retained on the nested sieves directly to the container. Do not rinse the material on to the 75 µm (No. 200) sieve.

   Note: When mechanical washing equipment is used, the introduction of water, agitating, and decanting may be a continuous operation. Limit agitation by mechanical washing equipment to a maximum of 10 minutes.

5) Dry the washed aggregate in the container to constant weight at 220 - 325°F (105 - 163°C). The material shall then be cooled to 120°F (49°C) or less and weigh the sample to the nearest 0.1 gram.
6) Sieve the aggregate over various sieve sizes, including the 75-µm (No. 200) sieve, as required by the specification covering the asphalt mixtures. Nest the sieves in order of decreasing size of opening from top to bottom and place the sample on the top sieve. Agitate the sieves by mechanical apparatus for a minimum of 10 minutes.

   Note: It is important to limit the quantity of material on a given sieve so that all particles have opportunity to reach sieve openings a number of times during the sieving operation. If overloading of a sieve is suspected, the sieving adequacy should be checked as per the requirements of AASHTO T 30.
7) Record the weight of material passing each sieve, the weight retained on the next sieve, and the amount passing the 75 µm (No. 200) sieve (the Pan weight).

   Note: The sum of these weights must be within 0.2 percent of the weight after washing. Add the weight of dry material passing the 75 µm (No. 200) sieve by dry sieving to the weight removed by washing in order to obtain the total passing the 75 µm (No. 200) sieve.

Example:

Aggregate Weight After Ignition	=	1518.1 grams
Aggregate Weight After Washing	=	1435.1 grams
Weight Loss From Washing	=	(1518.1 - 1435.1) = 83.0 grams

$$Percent\ Retained = \frac{Cumulative\ Weight\ Retained}{(Pan\ Weight + Weight\ Loss\ from\ Washing)} \times 100$$

$$Percent\ Passing = 100\% - Percent\ Retained$$

Sieve Size	*Cumulative Wt. Retained*	*Percent Retained*	*Percent Passing*
3/4"	---	---	100
1/2"	150.3	9.9	90
3/8”	402.1	26.5	74
#4	789.7	52.0	48
#8	1064.6	70.1	30
#16	1207.4	79.5	21
#30	1300.0	85.6	14
#50	1362.6	89.8	10
#100	1408.6	92.8	7
#200	1428.6	94.1	5.9
PAN	1434.9	---	---

Note 1: Formula for the Constant Method: $Percent\ Retained = Cumulative\ Weight\ Retained\ \times Constant$

where,

$$Constant = \frac{100}{(Pan\ Weight + Weight\ Loss\ from\ Washing)}$$

$$Example\ Constant\ from\ Above = \frac{100}{(1434.9 + 83.0)} = \quad 0.0658805$$

Note 2: The Pan Weight after sieving must equal the Aggregate Weight after Washing within 0.2 %.

$$\frac{(Agg.Wt.After\ Washing) - (Pan\ Wt.)}{Agg.Wt.After\ Washing} \times 100 \ = \ \frac{(1435.1 - 1434.9)}{1435.1} \times 100 \ = \ 0.014\% \quad \boxed{< \mathbf{0.2}\%} \quad \checkmark \textbf{OK}$$

7.9.5 Report

The QA/QC-1 form will be used to record weights and calculate percent aggregate passing each sieve size. Report each sieve size to the nearest whole number, except the amount passing the 75 µm (No. 200) sieve which is to be reported to the nearest one-tenth percent (0.1%).

7.10 ASPHALT BINDER CONTENT OF ASPHALT MIX BY THE IGNITION METHOD (NCDOT-T-308)

The Contractor and/or Department may determine binder content by using an ignition furnace. Results of each test must be recorded on either a standardized data sheet or a computer printout from the ignition furnace. This test data must be included with all other QC or QA test results for each sample tested.

7.10.1 General

This procedure can be used for the quantitative determination of asphalt binder content of asphalt paving mixtures or RAP/RAS materials by ignition of the asphalt binder at temperatures that reach the flashpoint of the binder in a furnace. This method does not require the use of solvents. The aggregate remaining after burning can be used for washed sieve analysis using NCDOT-T-30.

This procedure may involve hazardous materials, operations, and equipment. This procedure does not purport to address all of the safety problems associated with its use. It is the responsibility of the user of this procedure to consult and establish appropriate safety and health practices.

The asphalt binder in the paving mixture is ignited using the furnace equipment applicable to this procedure. The asphalt binder content is calculated as the difference between the initial weight of the asphalt paving mixture and the weight of the residual aggregate, the calibration factor, and moisture content. The asphalt binder content is expressed as weight percent of moisture-free mixture.

7.10.2 Equipment

A. Ignition Furnace - a forced air ignition furnace that heats the sample by either convection or direct infrared (IR) irradiation method. The convection type furnace must be capable of maintaining the temperature at 1072°F (578°C), with an internal balance thermally isolated from the furnace chamber accurate to 0.1 g. The balance shall be capable of weighing a 3500 gram sample in addition to the sample basket assembly. A data collection system will be included so that the weight can be automatically determined and displayed during the test. The furnace shall have a built in computer program to calculate change in weight of the sample and provide for the input of a calibration factor for aggregate loss. The furnace shall provide a printed ticket with the initial sample weight, per minute sample weight loss, temperature compensation, calibration factor, corrected asphalt binder content (%), test time, and test temperature. The furnace chamber dimensions shall be adequate to accommodate a sample size of 3500 grams. The furnace shall provide an audible alarm and indicator light when the sample weight loss does not exceed 0.01 percent of the total sample weight for three consecutive minutes. The furnace shall be equipped so that the door cannot be opened during the ignition test. A method for reducing furnace emissions shall be provided. The furnace shall be vented into a hood or to the outside and, when set up properly, shall have no noticeable odors escaping into the

laboratory. The furnace shall have a fan with the capability to pull air through the furnace to expedite the test and to reduce the escape of smoke into the laboratory.

B. Sample Basket Assembly – Consisting of sample baskets, a lid, a catch pan, and an assembly guard to secure the sample baskets to the catch pan. Sets with two or more baskets shall be nested. The sample shall be completely enclosed with screen mesh, perforated stainless steel plate, or other suitable material.

Note: Screen mesh with maximum and minimum openings of No. 8 (2.36 mm) and No. 30 (0.600 mm), respectively, has been found to perform well.

C. Oven - an oven capable of maintaining a temperature of 120 - 350°F (49 - 177°C).

D. Balance - a balance having sufficient capacity and conforming to the requirements of AASHTO M 231 for weighing the sample and basket assembly.

E. Safety Equipment - this equipment should include: safety glasses or face shield, high temperature gloves, long sleeve jacket, a heat resistant surface capable of withstanding 1200°F (650°C) and a protective cage capable of surrounding the sample basket assembly during the cooling period.

F. Miscellaneous Equipment - this equipment should include: a pan larger than the sample baskets for transferring samples after ignition, spatulas, bowls, and wire brushes.

7.10.3 <u>Sample</u>

A. Obtain samples of freshly produced asphalt mix in accordance with Section 7.5. If the mixture is not sufficiently soft to separate with a spatula, place it in a large flat pan in an oven at 220 - 325°F (105 - 163°C) until it is workable. Do not leave the sample in the oven for an extended period of time.

B. The size of the test sample shall be governed by the nominal maximum aggregate size of the mixture and shall conform to the weight requirements shown below. When the weight of the test sample exceeds the capacity of the equipment used, the test sample may be divided into suitable increments, tested, and the results appropriately combined for calculation of the asphalt binder content (weighted average). Sample sizes shall not be more than 500 grams greater than the minimum recommended sample weight.

Note: Large samples of fine mixes tend to result in incomplete ignition of the binder.

Nominal Maximum Aggregate Size	Minimum Weight Of Sample
37.5 mm	4000 grams
25.0 mm	3000 grams
19.0 mm	2000 grams
12.5 mm	1500 grams
9.50 mm	1200 grams
4.75 mm	1200 grams

C. The following three calibration factor methods may be affected by the type of aggregate in the mixture. Accordingly, to optimize accuracy, one or more of the following procedures must be performed before any acceptance testing is performed. Procedure C3 shall be used to determine the mix calibration factor at mix design. The calibration factor should be indicated on the M&T 601 Form. During production, either of the three methods may be used. However, certain aggregate types may result in unusually high calibration factors (>0.5%) and erroneous gradation results due to aggregate breakdown. If either of these occurs during procedure C1 then procedure C2 shall be followed. If after that procedure is performed, it also gives a calibration factor of >0.5, or a significant gradation change occurs, procedure C3 shall be followed. If questions arise as to whether a significant gradation change has occurred, contact the Asphalt Laboratory.

C1. <u>Calibration Factors: Individual Aggregate Samples</u>

1) Obtain individual aggregate samples in accordance with AASHTO T 2.
2) Split sample according to AASHTO T 248.
3) The size of the test sample shall conform to the weight requirement shown in Section 7.10.3(B).
4) Samples must be preheated in a 257 ± 9°F (125 ± 5°C) oven for a minimum of 25 minutes. Do not preheat the sample basket assembly.

5) Perform aggregate gradation according to NCDOT-T-27. (Do **not** wash the sample).
6.1) For the convection-type furnace: Preheat the ignition oven temperature to 1072°F (578°C).
6.2) For the direct IR irradiation-type furnace: Set the ignition burn profile to OPTION 2.
7) Set the calibration factor on the ignition furnace to 0.00 and ensure the printer is on.
8) Weigh and record the weight of the sample basket assembly (with lid and guards in place).
9) Evenly distribute the aggregate in the sample baskets (do not place any aggregate on the catch pan). Ensure that the sample is level in the baskets.
10) Weigh and record the total weight of the sample, baskets, catch pan, lid, and basket guards. Calculate and record the initial weight of the sample.
(Sample Weight = total weight minus weight of the sample basket assembly)
11) Input the initial weight of the sample in whole grams into the ignition furnace.
12) Place sample into ignition oven, close the door, and confirm that the sample weight (including basket assembly) is correct.
13) Press the Start button.
14) Burn the aggregate sample for 40 minutes and then press Stop. Determine the percentage of burn loss from the printout of test.
15) Perform an aggregate gradation according to NCDOT-T-27 on the samples. Compare to the original gradation in C1(5).
16) Repeat this process for each aggregate in a mix.
17) Multiply the percentage of each aggregate in the mix times the percentage of burn loss for each aggregate. Total these results for a calibration factor for that mix.
18) Recycled Asphalt Pavement (RAP) will have an assumed calibration factor of 0.5%, unless prior test results confirm a different calibration factor.
19) If the combined calibration factor is <0.5%, use that calibration factor. If the combined calibration factor is >0.5%, or if there is a significant gradation change in the aggregate, perform C2. below.
20) Percentage of burn loss for individual aggregates **shall be re-verified ANNUALLY.**

Example for a RS9.5B mix

Aggregate %			% of Burn Loss		Results
78M Stone	30%	X	0.3%	=	0.09%
Dry Screenings	20%	X	0.4%	=	0.08%
Washed Screenings	35%	X	0.4%	=	0.14%
RAP	15%	X	0.5%	=	0.08%
	100%				0.39%
					[Calibration Factor for RS9.5B mix]

C2. Calibration Factors: Blended Aggregate Samples

1) Prepare two blended aggregate samples. The size of the samples shall be in accordance with Section 7.10.3(B).
2) Individual aggregates used to prepare the blended aggregate samples shall be sampled from stockpiled material. The method used to combine the aggregates shall be the same procedure used during the mix design process.
3) Samples must be preheated in a 257 ± 9°F (125 ± 5°C) oven for a minimum of 25 minutes. Do not preheat the sample baskets.
4) Perform a gradation according to NCDOT-T-27 on one sample. (Do not wash the sample)
5) Burn both samples for 40 minutes and determine the average percent burn loss in accordance with C1(6) through C1(14). If the difference between the two calibration factors exceeds 0.15%, repeat the process for two more blended aggregate samples. From the total of these four calibration factors, discard the high and the low, and average the remaining two factors.
6) Perform aggregate gradation (NCDOT-T-27) on one burnt sample that is being used in the average calibration factor. Compare this gradation to the gradation of the unburned "blank" sample in C2(4) to evaluate the amount of aggregate breakdown.
7) If the final calibration factor is >0.5% or there is a significant gradation change, perform C3 below.

C3. Calibration Factors: Asphalt Mix Samples

1) Prepare two calibration factor mix samples at the design asphalt binder content for the applicable mix.
2) The size of the samples shall be in accordance with section 7.10.3(B).
3) Prior to mixing, prepare a butter mix at the design binder content. The purpose of the butter mix is to condition the mixing bowl by providing a coating of asphalt binder and fines in the bowl. Mix and discard the butter mix prior to mixing any of the calibration factor mix samples to ensure an accurate binder content. Aggregate used for the calibration factor samples shall be sampled from stockpiled material. The method used to combine the aggregates shall be the same procedure used during the mix design process. In addition a "blank" blended aggregate sample shall be batched and tested for aggregate gradation according to NCDOT-T-30. The washed gradation shall fall within the individual test limits for that mix type.
4) The freshly mixed samples may be placed directly in the sample baskets. If allowed to cool, the samples must be preheated in a 257 ± 9°F (125 ± 5°C) oven for a minimum of 25 minutes. Do not preheat the sample baskets.
5) Burn mix samples at 1,000°F (538°C) in accordance with 7.10.4 of this procedure.
6) Perform a gradation analysis according to NCDOT-T-30 on the residual aggregate from one of the burnt samples. Compare this gradation to the gradation of the unburned, "blank" sample to evaluate the amount of aggregate breakdown.
7) Once all of the calibration factor samples have been burned determine the measured asphalt binder contents for each sample by calculation or from the printed tickets.
8) If the difference between the measured asphalt binder contents of the two samples exceeds 0.15 percent, repeat the two tests and, from the four tests, discard the high and low results. Determine the calibration factor from the two remaining results. Calculate the difference between the actual and measured asphalt binder contents for each sample. The calibration factor is the average of the differences expressed in percent by weight of the HMA.

9.1) For the convection-type furnace, if the calibration factor exceeds 1.0 percent, lower the test temperature to 900 ± 8°F (482 ± 5°C) and repeat test. Use the calibration factor obtained at 900 ± 8°F (482 ± 5°C) even if it exceeds 1.0 percent.

9.2) For the direct IR irradiation-type furnace, the DEFAULT burn profile should be used for most materials. The operator may select burn-profile OPTION 1 or OPTION 2 to optimize the burn cycle. OPTION 1 is designed for samples that require a large aggregate calibration factor (greater than 1.0 percent) - typically very soft aggregate. OPTION 2 is designed for samples that may not burn completely using the DEFAULT burn profile.

10.1) For the convection-type furnace, the temperature for testing HMA samples shall be the same temperature selected for testing calibration factor samples for the furnace being used.

10.2) For the direct IR irradiation-type furnace, the burn profile for testing HMA samples shall be the same burn profile selected for testing calibration factor samples.

11) The calibration factor shall be re-verified each time there is a change in the mix ingredients, design, or as required by the Engineer.

7.10.4 Procedure

1.1) For the convection-type furnace, preheat the ignition furnace to 1000°F (538°C) or as determined in the calibration procedure.

1.2) For the IR direct irradiation-type furnace, use the same burn profile as used during the calibration procedure.

2) Oven dry the HMA (if necessary), RAP or RAS sample to a constant weight at a temperature of 220 - 325°F (105 - 163°C).
3) Enter the calibration factor for the specific mix to be tested.
4) Weigh and record the weight of the sample basket assembly (with lid and guards in place).
5) Prepare the sample as described in Section (B). Evenly distribute the sample in the sample baskets that have been placed in the catch pan, taking care to keep the material away from the edges of the baskets. Use a spatula to level the sample.
6) Weigh and record the total weight of the sample, baskets, catch pan, lid, and basket guards. Calculate and record the initial weight of the sample (total weight - weight of the sample basket assembly).
7) Input the initial weight of the sample in whole grams into the ignition furnace controller. Ensure that the correct weight has been entered.
8) Place the sample basket assembly in the furnace, close the chamber door, and confirm that the sample weight (including the baskets) displayed on the furnace scale equals the total weight recorded in Section 7.10.1(G)(6) within ±5 grams. (Differences greater than 5 grams or failure of the furnace scale to stabilize may indicate that the sample baskets are contacting the furnace wall.)

   Note: Do not start the furnace before performing this weight check.

9) Initiate the test by pressing the start/stop button. This will lock the sample chamber door and start the combustion blower.
   Note: The furnace temperature will drop below the set point when the door is opened, but will recover with the door closed and when ignition occurs. Sample ignition typically increases the temperature well above the set point, depending on sample size and asphalt binder content.
10) Allow the test to continue until the stable light and audible stable indicator indicate the test is complete (the change in weight does not exceed 0.01 percent for three consecutive minutes). Press the start/stop button. This will unlock the sample chamber and cause the printer to print out the test results.
   Note: An ending weight loss percentage of 0.02 may be used with QA Supervisor approval when aggregates that exhibit an excessive amount of loss during ignition testing are used. The precision and bias statement was developed using 0.01 percent. Both precision and accuracy may be adversely affected by using 0.02.
11) Use the corrected asphalt binder content (%) from the printed ticket. If a moisture content has been determined, subtract the moisture content from the printed ticket corrected asphalt binder content and report the difference as the corrected asphalt binder content.
12) Open the chamber door, remove the sample basket assembly, and place it on a cooling plate or block. Place the protective cage over the sample basket assembly, and allow it to cool to 120°F (49°C) or less (approximately 30 min).
   Note: The sample baskets should not be placed directly in front of any cooling source (fan, vent, exhaust, etc.) that could cause the loss of fines from the sample.
13) Empty the contents of the baskets into a flat pan. Use a small wire sieve brush to ensure that any residual fines are removed from the baskets. Perform the gradation analysis according to NCDOT-T-30.

7.10.5 Report

Always report the corrected asphalt binder content, calibration factor, temperature compensation factor (if applicable), total percent loss, sample weight, moisture content (if determined) and test temperature. Report all ignition furnace % binder and gradation result information on the QA/QC-1 or 1A Form. Also attach the entire original printed ticket from the ignition furnace to the QA/QC-1 or 1A Form.

7.11 SUPERPAVE GYRATORY COMPACTOR FIELD TEST PROCEDURE (NCDOT-T-312)

This method is used to determine if the asphalt mixture actually being produced meets the requirements of the Specifications and/or if changes have occurred. This is one of the most important tests the technician will conduct and is used in conjunction with the maximum specific gravity (G_{mm}) test to determine a density-voids (VTM) analysis of the mixture that is being produced. When checking VTM the mix is gyrated to the N_{des} number of gyrations. Also, a back calculation is performed to check $\%G_{mm}$ at N_{ini}.

The JMF will give the targets for maximum specific gravity (G_{mm}), bulk specific gravity of the compacted mix (G_{mb}), and percent air voids in the total mix (VTM). Due to normal testing error, material variations, changes that occur in the plant, and other possible causes, deviations from the established JMF values may occur. Therefore, occasional changes in the JMF values will need to be made based on the results obtained from QC/QA test data on actual mix production.

7.11.1 General

The following guidelines and tolerances will be utilized when comparing field bulk specific gravity of the compacted mix (G_{mb}), the field maximum specific gravity (G_{mm}), and the field VTM with JMF values to determine compliance and/or if a new JMF is needed.

A. A combined gradation (NCDOT-T-30), binder content test (NCDOT-T-308) and maximum specific gravity (NCDOT-T-209 OR NCDOT-D-6857) will be performed in conjunction with the Superpave Gyratory Compactor field test.
B. VTM determined by use of the Superpave Gyratory Compactor field test (G_{mb}) and maximum specific gravity test (G_{mm}) is subject to a ±2.0% Individual Test Control Limit against the JMF target VTM. (Refer to Subarticle 609-6(D).
C. All Gyratory specimens will be tested utilizing the 150 mm Superpave Gyratory Compactor test method.
D. Height, pressure, and external angle calibrations are <u>required</u> to be performed <u>prior to initially using the Gyratory Compactor.</u> Periodic calibrations for height, pressure, internal angle and rotation shall be performed at minimum frequencies specified in Section 7.2.2.

7.11.2 Equipment

A. Gyratory Compactor - A compactor meeting the requirements of AASHTO T 312. The ram shall apply and maintain a pressure of 600 ± 18 kPa perpendicular to the cylindrical axis of the specimen during compaction. The compactor shall tilt the specimen molds at an average internal angle of 1.16 ± 0.02° (20.2 ± 0.35 mrad), determined in accordance with AASHTO T 344. The compactor shall gyrate the specimen molds at a rate of 30.0 ± 0.5 gyrations per minute throughout compaction. The compactor shall also continuously measure and record the height of the specimen to the nearest 0.1 mm during compaction once per gyration.

B. Specimen Molds - Specimen molds shall have steel walls that are at least 7.5 mm thick and are hardened to at least a Rockwell hardness of C48. The initial inside finish of the molds shall have a root mean square (rms) of 1.60 µm or smoother. The average inside diameter of new molds shall be 149.90 mm to 150.00 mm (measured at room temperature). If any in-service mold exceeds 150.20 mm, it shall be taken out of service and replaced. Ram heads and mold bottoms shall be fabricated from steel with a minimum Rockwell hardness of C48. The ram heads shall stay perpendicular to their axis. The platen side of each mold bottom shall be flat and parallel to its face. All ram and base plate faces (the sides presented to the specimen) shall be flat to meet the smoothness requirement in AASHTO T 312 and shall have a diameter of 149.50 to 149.75 mm.

C. Balance - A balance meeting the requirements of AASHTO M 231 and readable to the nearest 0.1 gram

D. Oven - A forced-draft, thermostatically-controlled oven, capable of maintaining a uniform temperature of 120 - 350°F (49 - 177°C).

E. Thermometers - Digital or dial-type thermometers with metal stems for determining the temperature of asphalt mix.

F. Protection Discs – paper discs used for protection of specimens during compaction.

G. Extruder – An apparatus for extruding specimens from molds.

H. Miscellaneous Items - Flat-bottom metal pans for heating aggregates, scoop for batching aggregates, containers (grill-type tins, beakers, containers for heating asphalt), large mixing spoon, large spatula, gloves for handling hot equipment, paper disks, mechanical mixer (optional), lubricating materials recommended by the compactor manufacturer.

7.11.3 Sample

A. Mix and quarter the sample material as described in "Reduction of Samples to Testing Size", in Section 7.5. Weigh out the appropriate amount of mix to produce a compacted specimen height of 115 ± 5 mm at the desired number of gyrations. In order to determine the approximate weight of uncompacted mix, the following formula may be used:

$$\boxed{\left[\left(\frac{\pi d^2}{4}\right) h \times G_{mm} \times 0.96\right] \div 1000}$$

Note: This formula will give a weight, which is an estimate only. If it does not produce the proper specimen height, trial and error should be then performed to determine the desired target weight for the proper height (115 ± 5 mm).

B. If necessary, heat the 3 pans of mix until the mix reaches a field mix compaction temperature recommended for the binder type. The gyratory compaction temperatures for asphalt mix types are as follows:

[If the temperature of the mix is at or above this compaction temperature, it is not necessary to put the mix in an oven since there is no curing time required.]

Mix Sample Compaction Temperature (ALL Binder Grades)
10 °F lower than the Mixing temperature shown on the JMF, and then apply a range of ±5 °F.

Note: Mixing and Compaction temperatures are based on the specified (pay) PG binder grade for each mix type in Table 610-3. When using RAP or RAS with a different binder than specified, **use mixing and compaction temperatures based on the original binder grade for that mix type shown in Table 610-3.**

7.11.4 Procedure

1) Place three (3) 150 mm gyratory mold assemblies in an oven at 300 ± 25 °F (149 ± 14 °C) for a minimum of 30 minutes prior to estimated beginning of compaction.
2) Ensure that the settings on the compactor are as required by the specific JMF.
3) Once the compaction temperature is achieved, remove a heated mold assembly from the oven. Place a paper specimen protection disc in the bottom of the heated gyratory compaction mold.
4) Place the mixture into the mold in one lift. Care should be taken to avoid segregation in the mold. After all the mix is in the mold, level the mix and measure the temperature of the mix in the mold by placing a thermometer in the center of the specimen. Once the temperature is at the mix compaction temperature recommended for the binder type, place a specimen protection disc on top of the leveled material and place the mold assembly with mix into the Gyratory compactor and gyrate the number of N_{des} gyrations given on the JMF. If the mix is too hot, allow sufficient time for it to cool to above the specified range before compacting.
5) Place the mold assembly with mix into the Gyratory compactor and apply 600 ± 18 kPa of pressure to the mixture and introduce the 1.16 ± 0.02° average internal angle. Gyrate to the specified N_{des} number of gyrations, which is given on the JMF.
6) Procedures outlined in steps C. through E. should be done as quickly as possible as to not allow the mix to cool below the required temperature for that type Binder being compacted.
7) When the compaction is complete, remove the compaction angle and raise the gyratory ram. Remove the mold assembly from the gyratory compactor.
8) Extrude the specimen from the mold assembly. The specimens can be extruded from the mold immediately after compaction for most asphalt types. However, a cooling period of 5 to 10 minutes in front of a fan may be necessary before extruding some specimens to ensure the specimens are not damaged.
9) Remove the specimen protection discs. It is important to remove the paper specimen protection discs as soon as possible, because removal is difficult after the specimens have cooled.

Note: Before reusing a mold, place it back into an oven at compaction temperature for a minimum of 5 minutes.

10) Place the three specimens in front of a cooling fan until they cool to room temperature of 77 ± 9°F (25 ± 5°C). It is helpful to set the specimen in front of the fan on some type material that absorbs heat (such as concrete).
11) Identify each sample by marking with the appropriate QC/QA sample number and proper suffix (i.e. 02-1a, 02-1b, and 02-1c).
12) Determine bulk specific gravity (G_{mb}) using NCDOT-T-166 or NCDOT-T-331.

M. Determine the void content (VTM) of each specimen using the bulk lab specific gravity (G_{mb}) of each specimen and the actual maximum specific gravity (G_{mm}) determined from the maximum specific gravity using the formula given below and record the results.

$$\boxed{\%VTM\ @\ N_{des} = \frac{G_{mm} - G_{mb}\ @\ N_{des}}{G_{mm}} \times 100}$$

N. Determine the average gyratory bulk specific gravity (G_{mb}) and void content (VTM) for the three specimens. Discard an individual Gyratory bulk specific gravity that deviates more than ±0.015 from the average and recalculate the average, based on the remaining two specimens. If more than one-value deviates by more than ±0.015, the entire set of results are considered suspect and a new set of specimens must be made and tested.

7.11.5 Report

Report the entire test results of each gyratory specimen at both N_{ini} and N_{des} on the QA/QC-1 Form. Report results to the following significant decimals:

Height	=	0.1 mm
Weight	=	0.1 gram
Specific Gravity	=	0.001
VTM	=	0.1 %
VMA	=	0.1 %
VFA	=	1 %
$\%G_{mm}$ @ N_{ini}	=	0.1%

7.12 MAXIMUM SPECIFIC GRAVITY (G_{mm}) OF ASPHALT MIX – RICE METHOD (NCDOT-T-209)

This procedure is used to determine the maximum specific gravity (G_{mm}) of uncompacted asphalt paving mixtures. This procedure determines the specific gravity of a "voidless" mixture of the aggregate and asphalt binder. The maximum specific gravity procedure may be performed on either a loose sample of the mix or on previously compacted mixture, which has been reheated and broken apart to facilitate removal of trapped air in the mixture. In this test method, dry, loose mix is placed in a vacuum container and covered with water. A vacuum is then applied to reduce the residual pressure in the vacuum container and remove entrapped air from the mixture. After the vacuum is released, the sample and container are immersed in a water tank and the volume of the mix sample is determined. From the weight-volume relationship, the maximum specific gravity of the asphalt mixture can be calculated.

7.12.1 General

A. The most important reason for knowing the maximum specific gravity of a paving mixture is to aid in calculating the percentage of air voids (VTM) in lab compacted specimens and/or in the final compacted mixture. As was explained in Section 3, Mix Design, asphalt pavements must include a certain percentage (by volume) of air spaces or voids. These spaces perform important functions and are significantly related to the performance and service life of the completed pavement.

B. Maximum specific gravity tests will be performed by both the Contractor and the Department on all full test series mix samples. This procedure will be performed in conjunction with Gyratory testing on all asphalt mixes, along with binder content and washed gradation analysis. (An example of the maximum specific gravity determination worksheet is illustrated in Section 12).

7.12.2 Equipment

A. Vacuum Container – a metal or plastic pot or bowl with a diameter of approximately 7 to 10.25 in. (180 to 260 mm) and a bowl height of at least 6.3 in. (160 mm) shall be equipped with a transparent cover fitted with a rubber gasket and connections for the vacuum lines. Both the bowl and cover should be sufficiently stiff to withstand the applied vacuum pressure without visibly deforming. The hose connections shall be covered with a small piece of fine wire mesh to minimize the loss of any fine material.

B. Vacuum Pump or Water Aspirator - capable of evacuating air from the vacuum container to a residual pressure of 30 mm of Hg (4.0 kPa) or less. A suitable trap shall be installed between the vacuum vessel and vacuum source to reduce the amount of water vapor entering the vacuum pump.

C. Water Trap – A trap system installed between pump and sample container to protect the pump from moisture (not required if using a Water Aspirator).

D. Bleeder Valve - attached to the vacuum train to facilitate both the adjustment of the vacuum being applied to the vacuum vessel and the slow release of vacuum pressure.

E. Residual Pressure Manometer or vacuum gauge – traceable to NIST (mandatory) to be connected directly to the vacuum vessel and to be capable of measuring residual pressure down to 30 mm of Hg (4.0 kPa) or less. It is to be connected at the end of the vacuum line using an appropriate tube and using a separate opening (from the vacuum line) in the top of the container to attach the hose.

F. Mechanical Agitation Device - capable of applying a gentle but consistent agitation of the sample. This device shall be equipped with a means of firmly anchoring the container so that it does not move on the surface of the device. Additionally, the device must be equipped with an electric timer with a minimum 15-minute capacity.

G. Balance - capable of being read to the nearest 0.1 gram. For the pot or bowl method, the balance shall be equipped with a suitable apparatus and cradle to permit weighing the sample while suspended below the balance. The wire suspending the cradle should be the smallest practical size to minimize any possible effects of a variable immersed length and made of stranded wire or fishing line.

H. Water Tank - capable of maintaining a constant temperature of 77 ± 2°F (25 ± 1°C). The water tank must be large enough for entirely immersing the suspended vacuum container and equipped with an overflow outlet for maintaining a constant water level.

I. Oven - an oven of appropriate size, capable of maintaining a uniform temperature of 120 - 350°F (49 - 177°C).

J. Temperature Chart Recorder (Digital Temperature Data Logger) – Recording device for monitoring and logging temperature of water tank.

K. Thermometers - calibrated liquid-in-glass thermometers of suitable range with subdivisions and maximum scale error of 0.9°F (0.5°C), or any other thermometric device of equal accuracy, precision, and sensitivity shall be used. Thermometers shall conform to the requirements of Specification ASTM E1.

L. Miscellaneous Items - pans of sufficient size for heating and cooling samples; spatulas and/or scoops for transferring mix samples.

7.12.3 Sample

Mix, quarter and select sample as described in "Reduction of Samples to Testing Size", in Section 7.5. The size of the test sample shall be governed by the nominal maximum aggregate size of the mixture and shall conform to the weight requirements shown below. Sample size shall not be more than 200 grams greater than the minimum recommended sample weight. Weigh mix into an appropriately-sized container.

Nominal Maximum Aggregate Size	Minimum Weight Of Sample
25.0 mm	2000 grams
19.0 mm	2000 grams
12.5 mm	1500 grams
9.50 mm	1500 grams
4.75 mm	1500 grams

7.12.4 Procedure

1) Spread the mix uniformly in a large flat pan. Thoroughly break up the mix using care not to fracture the mineral particles, so that the particles of the fine aggregate portion are not larger than 1/4 inch (6.3 mm).
2) Cool the sample to room temperature of 77 ± 9°F (25 ± 5°C) [a portable electric fan can be used to speed the cooling process – however, care should be taken with airflow to prevent the loss of fines]. Place the entire amount of the sample in the appropriate container (bowl or pot) and weigh. Add water at 77 ± 2°F (25 ± 1°C) until the sample is covered completely.
3) Remove entrapped air by subjecting the contents of the container to a partial vacuum of 27.5 ± 2.5 mm Hg (3.7 ± 0.3 kPa), absolute pressure for 15 ± 2 minutes. The residual pressure of the container shall be measured by a manometer attached independently to the container. The container and contents shall be continuously shaken by a mechanical device in order to assist the removal of air bubbles.
   Note: Depending on the manufacturer and model of Vacuum Pump used, it may be necessary to run the pump for 5 – 10 minutes before and after the test to remove trapped water vapor that can cause damage.
4) At the end of the vacuum period, release the vacuum by increasing the pressure at a rate not to exceed 60 mmHg (8 kPa) per second.
5) Suspend the bowl or pot and contents (without the lid) in 77 ± 2°F (25 ± 1°C) water for 10 ± 1 minutes. Maintain the water temperature at 77 ± 2°F (25 ± 1°C) by adding hot or cold water, or more preferably by using a small submergible heater. Record the weight of the suspended sample.
   Note: The water tank circulation pump shall not be in use while recording sample weights.

6) Calculate the maximum specific gravity (G_{mm}) of the test sample to three decimal places (x.xxx).

$$G_{mm} = \frac{A}{(A - C)}$$

where, A = weight of oven-dry sample in air, grams
C = weight of sample in water after vacuum, grams

7.12.5 Dryback Procedure

For all mixes containing any aggregate having a water absorption of greater than 1.5%, the following dryback procedure must also be performed. The Department reserves the right to require a dryback procedure for any maximum specific gravity test. For a listing of quarries requiring the dryback procedure, contact the Materials and Tests Unit Asphalt Laboratory at (919) 329-4060.

1) Drain the water from the sample. To prevent loss of fine particles, decant the water through a 75 µm (No. 200) sieve or a towel held over the top of the container.

2) Spread the sample in a tared pan in front of an electric fan to speed evaporation and remove surface moisture. Agglomerations of mix shall be broken up by hand. The dryback pan may be lined with newspaper to speed up moisture removal.
3) After the pan is visibly dry, begin weighing it at 15-minute intervals, and when the loss in weight is less than 0.05% for this interval, the sample may be considered to be surface dry. The procedure shall be accompanied by intermittent stirring of the sample. Care must be taken to prevent loss of particles of mix.
4) Calculate the maximum specific gravity (G_{mm}) of the test sample to three decimal places (x.xxx).

$$G_{mm} = \frac{A}{(B - C)}$$

where, A = weight of oven-dry sample in air, grams
B = weight of surface dry sample in air after vacuum & dryback, grams
C = weight of sample in water after vacuum, grams

7.12.5 Report

Report the final Maximum Specific Gravity value (G_{mm}) on the QA/QC-1 Form.
If the Dryback Procedure is required, report the Rice Dryback Correction Factor data on the QA/QC-4 Form.

7.13 MAXIMUM SPECIFIC GRAVITY (G_{mm}) OF ASPHALT MIX – VACUUM SEALING METHOD (NCDOT-D-6857)

This procedure is used to determine the maximum specific gravity (G_{mm}) of uncompacted asphalt paving mixtures. This procedure determines the specific gravity of a "voidless" mixture of the aggregate and asphalt binder. The maximum specific gravity procedure may be performed on either a loose sample of the mix or on previously compacted mixture, which has been reheated and broken apart to facilitate removal of trapped air in the mixture. In this test, dry, loose mix is placed inside two plastic bags. The double-bagged sample is placed into a vacuum chamber which automatically seals the bag with the sample inside. The bags are then removed from the vacuum chamber and placed into a large water tank equipped with a balance for weighing the sample under water. The bags are then cut open to allow water to enter the bag and surround the sample. The underwater weight of the mixture can be measured and from the weight-volume relationship, the maximum specific gravity of the asphalt mixture can be calculated.

7.13.1 General

A. The most important reason for knowing the maximum specific gravity of a paving mixture is to aid in calculating the percentage of air voids (VTM) in lab compacted specimens and/or in the final compacted mixture. As was explained in Section 3, Mix Design, asphalt pavements must include a certain percentage (by volume) of air spaces or voids. These spaces perform important functions and are significantly related to the performance and service life of the completed pavement.
B. Maximum specific gravity tests will be performed by both the Contractor and the Department on all full test series mix samples. This procedure will be performed in conjunction with Gyratory testing on all asphalt mixes, along with binder content and washed gradation analysis. (An example of the maximum specific gravity determination worksheet is illustrated in Section 12).

7.13.2 Equipment

A. Balance - capable of being read to the nearest 0.1 gram. The balance shall be equipped with a suitable apparatus and cradle to permit weighing the sample while suspended below the balance. The wire suspending the cradle should be the smallest practical size to minimize any possible effects of a variable immersed length and made of stranded wire or fishing line.
B. Water Tank - for immersing the sample in water while suspended under the weighing device, equipped with an overflow outlet for maintaining a constant water level and thermostatically controlled so as to maintain the tank at 77 ± 2°F (25 ± 1°C). A heater and circulator may be attached. The circulator shall not be in use while recording sample weights. It is important that the water tank be of sufficient size to ensure sufficient space for the sample and the suspension cradle.

C. Vacuum Chamber - with a minimum 1.25 hp (0.93 kW) pump capable of evacuating a sealed and enclosed chamber to 5.6 mm Hg. The chamber shall be large enough to seal samples as large as 2200 grams. The device shall automatically seal the plastic bag and exhaust air back into the chamber in a controlled manner to ensure proper conformance of the plastic to the asphalt mixture. The air exhaust and vacuum operation time should be calibrated at the factory prior to initial use. The air exhaust system should be calibrated to bring the chamber to atmospheric pressure in 80 to 150 seconds after the completion of the vacuum operation. The vacuum system should be provided with a latch to control the chamber door opening.

D. Absolute Vacuum Measurement Gage - a gage independent of the vacuum sealing device which can be placed directly inside the chamber to verify vacuum performance and the chamber door sealing condition of the unit. The gage shall be capable of reading pressure to 3 mm Hg (3 TORR).

E. Plastic Bags - Internal Bags shall have random channels built into at least one side to aid in evacuating all air from the sample. The internal bags shall have a minimum opening of 12 in. (305 mm) and maximum opening of 13.5 in. (340 mm). The External Bags shall have a minimum opening of 14.75 in. (375 mm) and a maximum opening of 15.5 in. (394 mm). Each bag shall be of material that will not adhere to asphalt film, puncture resistant, and impermeable to air. The bags shall have a minimum thickness of 0.004 in. (0.100 mm) and maximum thickness of 0.006 in. (0.152 mm). The combined apparent specific gravity of the two bags shall be provided by the manufacturer.

Note: Care should be taken to protect the bags during storage. Refer to the manufacturer's procedures for safe handling and storage of bags.

F. Filler Plates - to position the sample and the bags in the same plane as the sealing bar.

G. Bag Cutting Knife or scissors - for opening bags during testing.

H. Oven - an oven of appropriate size, capable of maintaining a uniform temperature of 120 - 350°F (49 - 177°C).

I. Temperature Chart Recorder (Digital Temperature Data Logger) – Recording device for monitoring and logging temperature of water tank.

J. Thermometers - calibrated liquid-in-glass thermometers of suitable range with subdivisions and maximum scale error of 0.9°F (0.5°C), or any other thermometric device of equal accuracy, precision, and sensitivity shall be used. Thermometers shall conform to the requirements of Specification ASTM E1.

7.13.3 Sample

Mix, quarter and select sample as described in "Reduction of Samples to Testing Size", in Section 7.5. The size of the test sample shall be governed by the nominal maximum aggregate size of the mixture and shall conform to the weight requirements shown below. Sample size shall not be more than 200 grams greater than the minimum recommended sample weight.

Nominal Maximum Aggregate Size	Minimum Weight Of Sample
25.0 mm	2000 grams
19.0 mm	2000 grams
12.5 mm	1500 grams
9.50 mm	1500 grams
4.75 mm	1500 grams

7.13.4 Procedure

1) Spread the mix uniformly in a large flat pan. Thoroughly break up the mix using care not to fracture the mineral particles, so that the particles of the fine aggregate portion are not larger than 1/4 inch (6.3 mm).
2) Cool the sample to room temperature of 77 ± 9°F (25 ± 5°C) [a portable electric fan can be used to speed the cooling process – however, care should be taken with airflow to prevent the loss of fines]. Record the weight of the dry sample in air.
3) Set the vacuum sealing machine according to the manufacturer's recommendation to create at least a 5.6 mm Hg absolute pressure inside the chamber (Program #2).

   Note: For asphalt mixtures that contain polymers, follow the manufacturer's recommendations.
4) If after examining the bags there are no punctures or cuts, weigh one internal and one external bag.
5) Record the combined weight of the two bags.
6) Place the empty external bag inside the vacuum chamber.
7) Place the entire sample in the internal bag. Ensure that none of the sample is lost during this transfer.

8) Place the internal bag containing the sample with the channel side (rough side) down into the external bag. The rough side is placed under the sample to protect against trapped air and to help in the evacuation of the air from the bag.
9) Spread the sample so that it is evenly distributed within the internal bag. Do not spread the sample by squeezing down on the sample from outside the bag.
10) Push in the opening of the internal bag away from the opening of the external bag to prevent the opening of the internal bag from being sealed. Make sure that the opening of the internal bag is flat and that the opening is not restricted by a fold in the bag.
11) Place the opening of the external bag over the seal bar, making sure the internal bag is not over the seal bar.
12) Close the chamber door.
13) Allow the vacuum chamber to remove the air from the chamber and the plastic bag. The vacuum chamber shall automatically seal the bag once the air is removed.
14) Exhaust air into the chamber until the chamber door opens indicating atmospheric pressure within the chamber. The chamber door latch can be used to avoid automatic opening of the door after completion of the test.
15) Remove the sealed sample from the vacuum chamber. Perform a visual inspection of the bag and listen for any leaks. Gently pull on the bag at any areas that appear loose. Loose areas indicate a poor seal and the process must then be restarted with a new outer bag and a new initial weight. The time between the lid opening after sealing and the time to placement of the sample into the water tank should not exceed one (1) minute to reduce the potential for bag leaks.
    Note: While transferring the sample to the water tank, handle the sealed sample with extreme care. Avoid any impacts with hard surfaces that could cause leaks in the bag and allow air to enter the sample.
16) Immediately transfer the sample to the water tank at 77 ± 2°F (25 ± 1°C) equipped with a scale.
    Note: The water tank circulation pump shall not be in use while recording sample weights.
17) Submerge the sealed bag containing the sample completely under water and cut open the external bag all the way across the top, leaving approximately 1 in. (25 mm) intact. When cutting the bag, make certain the sealed portion of the bag is under water and remains under water throughout the entire process.
18) Open both bags with your fingers and hold open for 10 to 15 seconds to allow the water to flow in the bags.
19) Secure the sample over a suspended scale and allow the weight to stabilize. Make certain the bags or the suspension equipment is not contacting the sides or the bottom of the water tank and that no part of the plastic bag is breaking the water surface at any time.
20) Allow the scales to stabilize, and record the weight of the mix and bags underwater.
21) Calculate maximum specific gravity (G_{mm}) of test sample to three decimal places (x.xxx).

7.13.5 Report

Maximum Specific Gravity data may be recorded on the manufacturer's data collection table or similar form. Report the final Maximum Specific Gravity value (G_{mm}) on the QA/QC-1A Form.

7.14 BULK SPECIFIC GRAVITY OF COMPACTED ASPHALT MIX – SSD METHOD (NCDOT-T-166)

7.14.1 General

This test procedure is used to determine the bulk specific gravity (G_{mb}) of compacted asphalt mixtures, including either Roadway cored samples, Gyratory specimens or other compacted specimens. The bulk specific gravity of Gyratory specimens is used in the density-voids analysis in the mix design process and in field testing of the mixture. The specific gravity of cored pavement samples is used for comparison with the Density Control Specific Gravity (G_{mm}) for density compliance purposes.

In the Saturated Surface-Dry (SSD) specimen method, a compacted specimen is manually weighed in air, under water, and at the saturated surface-dry condition to determine the specimen's bulk specific gravity (G_{mb}). If testing OGAFC or other permeable asphalt mixes with interconnected voids, NCDOT-T-331 shall be used to determine bulk specific gravity.

7.14.2 Equipment

A. Balance - capable of being read to the nearest 0.1 gram. The balance shall be equipped with a suitable apparatus and cradle to permit weighing the sample while suspended below the balance. The wire suspending the cradle should be

the smallest practical size to minimize any possible effects of a variable immersed length and made of stranded wire or fishing line. The suspension apparatus shall be constructed to enable the cradle to be immersed to a depth sufficient to cover it and the test sample during weighing. Care should be exercised to ensure no trapped air bubbles exist under the specimen.

B. Water Tank - for immersing the specimen in water while suspended under the weighing device, equipped with an overflow outlet for maintaining a constant water level and thermostatically controlled so as to maintain the tank at 77 ± 2°F (25 ± 1°C). A heater and circulator may be attached. The circulator shall not be in use while recording sample weights. It is important that the water tank be of sufficient size to ensure sufficient space for the sample and the suspension cradle.

C. Core-Drying Apparatus – For drying cored samples prior to testing. The apparatus must have a pump capable of evacuating a sealed chamber to a pressure of 6 mmHg. The chamber must be capable of accommodating specimens of 6 in. diameter by 7 in. height. The display shows a pressure value that indicates a dry point in the chamber and the number of cycles.

D. Oven - an oven of appropriate size, capable of maintaining a uniform temperature of 120 - 350°F (49 - 177°C).

E. Temperature Chart Recorder (Digital Temperature Data Logger) – Recording device for monitoring and logging temperature of water tank.

F. Thermometers - calibrated liquid-in-glass thermometers of suitable range with subdivisions and maximum scale error of 0.9°F (0.5°C), or any other thermometric device of equal accuracy, precision, and sensitivity shall be used. Thermometers shall conform to the requirements of ASTM E1.

7.14.3 Sample

A. Test specimens may be either laboratory molded from hot asphalt mix or cored samples from compacted roadway pavement.

B. Samples taken from the compacted pavement shall have a minimum diameter of 6 in. (150 mm).

C. Specimens shall be free from foreign materials such as tack coat, foundation material, soil, etc.

D. If needed, specimens may be separated from other pavement layers by sawing or other suitable means. Care should be exercised to ensure sawing does not damage the specimens.

7.14.4 Methods of Drying

A. Laboratory Molded Specimen – recently compacted specimens which have not been exposed to moisture do not require drying. Cool the specimens to room temperature of 77 ± 9°F (25 ± 5°C) prior to testing.

B. Cored Samples – use one of the following drying methods:

- Oven Drying: Samples saturated with water shall initially be dried to a constant weight in an oven overnight at 125 ± 5°F (52 ± 3°C) and then weighed at 2-hour drying intervals. Constant weight is defined as the weight at which further drying does not alter the weight by more than 0.05 percent when weighed at 2-hour intervals.
- Core-Drying Apparatus: This method can be used to determine moisture content and amount of water loss during drying by weighing the sample before and after the drying operations. Record the weight of the specimen and place in the apparatus. Run one cycle to completion, remove specimen, and re-weigh. Calculate the water loss. Continue the drying process using additional cycles as needed to achieve constant weight. Constant weight is defined as the weight at which further drying does not alter the weight by more than 0.05 percent when weighed after at least two drying cycles.

7.14.5 Procedure

1) Cool the specimen to room temperature at 77 ± 9°F (25 ± 5°C). Weigh and record the specimen dry weight **(A)**.

2) Immerse the specimen in the water tank at 77 ± 2°F (25 ± 1°C) for 4 ± 1 minutes and record the immersed weight **(C)**.

   Note: The water tank circulation pump shall not be in use while recording sample weights.

3) Remove the specimen from the water tank; damp-dry the specimen by blotting it with a damp towel, and determine the surface-dry weight **(B)** as quickly as possible (the entire operation is not to exceed 25 seconds). Each specimen shall be immersed and weighed individually.

   Note: Completely immerse entire towel in water and wring out.
   Damp is considered to be when no water can be wrung from the towel.

4) Calculate the specimen bulk gravity (G_{mb}) of the test specimen as follows:

$$G_{mb} = \frac{A}{(B - C)}$$

where, A = weight of the dry specimen in air, grams
B = weight of the saturated surface-dry specimen, grams
C = weight of the specimen in water, grams

7.14.6 Report

Report the Bulk Specific Gravity (G_{mb}) of laboratory-molded samples on Form QA/QC-1.
Report the Bulk Specific Gravity (G_{mb}) of cored samples on form QA/QC-5.

7.15 BULK SPECIFIC GRAVITY OF COMPACTED ASPHALT MIX – VACUUM SEALING METHOD (NCDOT-T-331)

7.15.1 General

In the Vacuum Sealing Method, a compacted specimen is placed inside a plastic bag which is then automatically sealed in a vacuum chamber. The sealed bag can then be placed into a large water tank equipped with a balance for weighing the sample under water. From this weight-volume relationship, the bulk specific gravity of the specimen can be calculated. If testing OGAFC or other permeable asphalt mixes with interconnected voids, NCDOT-T-331 shall be used to determine bulk specific gravity.

7.15.2 Equipment

A. Balance - capable of being read to the nearest 0.1 gram. The balance shall be equipped with a suitable apparatus and cradle to permit weighing the sample while suspended below the balance. The wire suspending the cradle should be the smallest practical size to minimize any possible effects of a variable immersed length and made of stranded wire or fishing line. The suspension apparatus shall be constructed to enable the cradle to be immersed to a depth sufficient to cover it and the test sample during weighing. Care should be exercised to ensure no trapped air bubbles exist under the specimen. The sample cradle should have no sharp edges to prevent puncture of the plastic bags.
B. Water Tank - for immersing the specimen in water while suspended under the weighing device, equipped with an overflow outlet for maintaining a constant water level and thermostatically controlled so as to maintain the tank at 77 ± 2°F (25 ± 1°C). A heater and circulator may be attached. The circulator shall not be in use while recording sample weights. It is important that the water tank be of sufficient size to ensure sufficient space for the sample and the suspension cradle.
C. Vacuum Chamber - with a minimum 1.25 hp (0.93 kW) pump capable of evacuating a sealed and enclosed chamber to a minimum pressure of 10 mm Hg in less than 60 s, when at sea level. The chamber shall be large enough to seal samples of 150 mm wide by 350 mm long by 150 mm thick. The device shall automatically seal the plastic bag and exhaust air back into the chamber in a controlled manner to ensure proper conformance of the plastic to the asphalt specimen. The air exhaust and vacuum operation time should be calibrated at the factory prior to initial use. The air exhaust system should be calibrated to bring the chamber to atmospheric pressure in 80 to 120 s, after the completion of the vacuum operation. The vacuum system should be provided with a latch to control the chamber door opening.
D. Vacuum Gauge - shall be capable of being placed inside the automatic vacuum sealing device to verify vacuum performance and seal integrity. The gauge shall have a minimum range of 10 to 0 mmHg (10 to 0 torr) and readable to 1 mmHg (1 torr) increments as a minimum.
E. Core-Drying Apparatus – For drying cored samples prior to testing. The apparatus must have a pump capable of evacuating a sealed chamber to a pressure of 6 mmHg. The chamber must be capable of accommodating specimens of 6 in. diameter by 7 in. height. The display shows a pressure value that indicates a dry point in the chamber and the number of cycles.
F. Plastic Bags - the two most commonly used sizes of bags are designated as small and large size bags. The small bags shall have a minimum opening of 9.25 in. (235 mm) and a maximum opening of 10.25 in. (260 mm) with a mass of less than 35 g. The large bags shall have a minimum opening of 14.75 in. (375 mm) and a maximum opening of 15.5 in. (394 mm) with a mass of 35 g or more. The bags shall be made of a plastic material that will not adhere to asphalt film, puncture resistant, capable of withstanding sample temperatures of up to 158°F (70°C), impermeable to water, and contain no air channels for evacuation of air from the bag. The bags shall have a minimum thickness of 0.004 in.

(0.100 mm) and a maximum thickness of 0.006 in. (0.152 mm). The manufacturer shall provide the bag correction factor (apparent specific gravity) of the bags (usually located in the operator's manual). See the manufacturer's recommendations to ensure proper handling of bags.

G. Specimen Sliding Plates—Level and smooth-sided planar filler plates shall be inserted into the chamber to keep the samples of various heights level with the seal bar while being sealed. The plates shall be removable and of the appropriate dimensions to easily fit into the vacuum chamber. A smooth-sided specimen supporting plate shall easily slide on top of the smooth-sided plates. The opposite side of the smooth-sided specimen supporting plate shall have a cushioning membrane to help prevent tears in the plastic bag. The plate shall be large enough to fully support the specimen but small enough to allow movement during the sealing process.

H. Bag Cutting Knife or Scissors - for quickly opening bags during testing.

I. Oven - an oven of appropriate size, capable of maintaining a uniform temperature of 120 - 350°F (49 - 177°C).

J. Temperature Chart Recorder (Digital Temperature Data Logger) – Recording device for monitoring and logging temperature of water tank.

K. Thermometer—ASTM 17F (17C), having a range of 66 to 80°F (19 to 27°C), graduated and conforming to ASTM E1. An electronic temperature measuring device, such as a resistance thermometer or thermocouple, may be used.

7.15.3 Sample

A. Test specimens may be either laboratory molded from hot asphalt mixtures or cored samples from compacted roadway pavement.

B. Samples taken from the compacted pavement shall have a minimum diameter of 6 in. (150 mm).

C. Specimens shall be free from foreign materials such as tack coat, foundation material, soil, etc.

D. If needed, specimens may be separated from other pavement layers by sawing or other suitable means. Care should be exercised to ensure sawing does not damage the specimens.

7.15.4 Methods of Drying

A. Laboratory Molded Specimen – recently compacted specimens which have not been exposed to moisture do not require drying. Cool the specimens to room temperature of 77 ± 9°F (25 ± 5°C) prior to testing.

B. Cored Samples – use one of the following drying methods:

- Oven Drying: Samples saturated with water shall initially be dried to a constant weight in an oven overnight at 125 ± 5°F (52 ± 3°C) and then weighed at 2-hour drying intervals. Constant weight is defined as the weight at which further drying does not alter the weight by more than 0.05 percent when weighed at 2-hour intervals.
- Core-Drying Apparatus: This method can be used to determine moisture content and amount of water loss during drying by weighing the sample before and after the drying operations. Record the weight of the specimen and place in the apparatus. Run one cycle to completion, remove specimen, and re-weigh. Calculate the water loss. Continue the drying process using additional cycles as needed to achieve constant weight. Constant weight is defined as the weight at which further drying does not alter the weight by more than 0.05 percent when weighed after at least two drying cycles.

7.15.5 Procedure

1) Cool the specimen to room temperature at 77 ± 9°F (25 ± 5°C). Weigh and record the specimen dry weight **(A)**.

   Note: It is important that the sample contain less than 5 g of water before it is exposed to vacuum. At high vacuum, water will evaporate, potentially causing the bag around the sample to loosen due to trapped gas, thus resulting in a higher volume determination and a lower bulk specific gravity result.

2) Select an appropriately sized bag for the specimen. Specimens of 150 mm in diameter by up to 2 in. in thickness are usually tested with the small bag. Specimens of 150 mm in diameter by 2 in. or greater in thickness will usually be tested with a large bag.

3) Set the vacuum sealing machine according to the manufacturer's recommendations for the proper heat-sealing bar temperature (Program #1).

4) Inspect the bag for holes and irregularities, then record the bag weight. Place the bag inside the vacuum chamber on top of the specimen sliding plate.

5) Insert the specimen into the bag with the smoothest plane of the specimen on the bottom. This operation may be done inside the chamber while holding the bag open with one hand over the sliding plate and gently inserting the specimen with the other hand. There should be about 1 in. of slack between the presealed bag end and the specimen.

6) If needed, filler plates should be added or removed prior to inserting the specimen. Grab the unsealed end of the bag on each side, and gently pull and center it over the seal bar, overlapping the bag at least 1 in.
7) Ensure that there are no wrinkles in the bag along the seal bar just prior to closing the lid.
8) Close the lid, and engage the lid-retaining latch. The vacuum pump light will illuminate "red," and the vacuum gauge on the exterior of the chamber will become active, or a digital reading will show the vacuum state. It is normal for the bag to expand or "puff up" during this process.
9) Once sealed, the "de-vac" valve will open, and air will enter the chamber, causing atmospheric pressure to collapse the bag around the specimen.
10) Disengage the lid-retaining latch, and carefully remove the sealed specimen from the chamber. Gently pull on the bag at any areas that appear loose. Loose areas indicate a poor seal and the process must then be restarted with a new bag and a new initial weight.
11) Determine the weight of the sealed specimen in air by summing the dry specimen weight in (1) and the bag weight in (4) above. Designate this weight as **(B)**.
12) Quickly weigh the sealed specimen in a water tank at 77 ± 2°F (25 ± 1°C). Fully submerge the specimen and bag to ensure no trapped air bubbles exist under the specimen. Ensure that the bag is completely underwater and that it is not touching the edges of the water tank. The time between the lid opening after sealing and the time to placement of the specimen into the water tank should not exceed one (1) minute to reduce the potential for bag leaks. Designate this weight as **(E)**.

    Note: The water tank circulation pump shall not be in use while recording sample weights.
13) To ensure a tight seal in the bag, remove the sample from the water, and cut the bag open. Remove the sample from the bag, and determine its weight **(C)**. Compare this weight with initial dry weight **(A)**.

    Note: If **(A)** is more than ±5 grams of dry specimen weight **(C)**, the results from this method may not be accurate. The check passes if less than 0.08 percent is lost or no more than 0.04 percent is gained. A loss indicates sample material loss, and a gain indicates a possible bag leakage problem. Remove the bag, and restart the process at Section 1 if this check fails.
14) Calculate the specimen bulk gravity (G_{mb}) of the test specimen to three decimal places (x.xxx) using the following equation (the bag correction factor is designated as **(F)**:

$$Gmb = \frac{A}{[C + (B - A)] - E - \left[\frac{(B - A)}{F}\right]}$$

7.15.6 Report

Report the Bulk Specific Gravity (G_{mb}) of laboratory-molded samples on Form QA/QC-1A.
Report the Bulk Specific Gravity (G_{mb}) of cored samples on form QA/QC-5.

7.16 TENSILE STRENGTH RATIO (TSR) TEST (NCDOT-T-283)

This procedure covers the preparation of specimens and measurement of diametral tensile strength resulting from the effects of saturation and accelerated water conditioning of asphalt mixtures in the laboratory. The results are used to predict the long-term stripping susceptibility of the asphalt mixtures and to evaluate the effects of anti-stripping additives.

7.16.1 General

A. Mix Design TSRs:

(1) The Contractor shall prepare one set of test specimens to be tested by QC personnel at the QC mix design or field lab site.
(2) The 150 mm Gyratory Compactor specimens for ALL mix types shall have a void content (VTM) of 7.0 ± 0.5%.
(3) The Maximum Specific Gravity (G_{mm}) determined during the mix design process will be used to determine the VTM of the compacted specimens.
(4) The compacted specimens must be tested on a test press meeting the requirements of AASHTO T 283.

(5) The test data shall be submitted to the Asphalt Design Engineer on Form M&T 612 along with all other required mix design data and forms for approval.

B. <u>Field TSRs:</u>

<u>OPTION 1:</u>

(1) Contractor will sample, test, and furnish TSR results to the Engineer within 7 calendar days after beginning production of each new mix design.

(2) The 150 mm Gyratory Compactor specimens for ALL mix types shall have a void content (VTM) of 7.0 $\pm$ 0.5%. QC tested TSR specimens shall be retained at the QC lab for five (5) calendar days commencing the day the samples are tested or until disposal permission is given by QA personnel, whichever occurs first.

(3) The Contractor will prepare an additional set of specimens and submit these within five (5) calendar days of obtaining the mix sample to the QA Lab for testing.

(4) Along with these compacted specimens, the Contractor shall furnish 5,000 grams of loose mix from the same sample. QA will perform the Maximum Specific Gravity test as required by mix type.

(5) If the QC's first production TSR results fail to meet the minimum TSR specification requirements, but do not exceed the individual test control limit for that mix type, the Contractor will immediately resample. The Contractor will then compact another set of specimens for testing. The process specified in steps (1) through (3) above shall be repeated.

(6) If the first production TSR results exceed the applicable individual test control limits, production of that mix design will cease immediately and shall not resume until approval is given by the Engineer.

(7) If the QC's first production TSR results meet minimum requirements, but the corresponding QA split sample results fail to meet the minimum requirement and the QA split sample results are not more than 5% below minimum with no visual stripping in either set, the results will be considered reasonably acceptable. (The determination of visual stripping will be made by QA personnel). If the corresponding QA split sample results are more than 5% below the minimum requirement or exhibit stripping, the Contractor shall be directed to take a second production TSR sample.

(8) If the QC's second production TSR results fail to meet the minimum TSR specification requirement, the Contractor's production of that mix design shall be stopped. Production may resume once joint testing as outlined in OPTION 2 below indicates the minimum requirement has been met and the results are approved by the Engineer.

(9) If the QC's second production TSR results meet minimum requirements, but the corresponding QA results fail to meet the minimum requirement and the QA results are not more than 5% below minimum with no visual stripping in either set, the results will be considered reasonably acceptable. If the corresponding QA split sample results are more than 5% below the minimum requirement or exhibit stripping, the Contractor shall stop production. Production may resume once joint testing as outlined in OPTION 2 below indicates the minimum requirement has been met and the results are approved by the Engineer.

<u>OPTION 2:</u>

(1) The Contractor may elect to sample and prepare one set of specimens to be tested jointly by QC/QA personnel at a mutually agreed upon lab site with the results being determined within 7 calendar days of beginning normal production. TSR testing shall not be performed until both parties are present.

(2) The 150 mm Gyratory Compactor specimens for ALL mix types shall have a void content (VTM) of 7.0 $\pm$ 0.5%. QA shall confirm void content prior to testing.

(3) The Contractor will also furnish 5,000 grams of loose mix from the same sample the TSR sample was taken. This mix shall be tested jointly to determine the Maximum Specific Gravity (G_{mm}).

(4) If the first production QC TSR fails to meet the minimum TSR requirements for that mix type, but does not exceed the individual TSR test control limits, or is not reasonably acceptable as described in (6) below, the Contractor shall immediately resample and compact another set of specimens for testing. The process specified in steps (1) through (3) above shall be repeated. If the first production QC TSR fails to meet the minimum and exceeds the individual test control limits for that mix type, the Contractor shall immediately stop production of that mix design and not resume until given approval by the Engineer.

(5) If the QC's second production TSR results fail to meet the minimum requirement, or is not reasonably acceptable as determined in (6) below, the Contractor's production of that mix shall be stopped until field tests indicate the minimum requirement has been met, and approved by the Engineer.

(6) When results fail to meet minimum requirements and the results are not more than 5% below minimum with no visual stripping, the results will be considered reasonably acceptable. The determination of visual stripping will be made by QA personnel. Any other failing results will be considered unacceptable, unless otherwise approved by the Engineer.

C. <u>Verification TSRs:</u>

(1) After the minimum specification requirement is met on plant produced mix, QA will obtain random verification TSR test samples at a minimum frequency of 10% of QC's frequency. QA personnel will prepare, test, and furnish results of these verification TSR samples to QC within 7 calendar days of the sample being taken.

(2) If the verification TSR results do not meet the minimum requirement and the results are not more than 5% below minimum with no visual stripping the results will be considered reasonably acceptable.

(3) If two consecutive randomly sampled and tested verification TSRs fail to meet the minimum requirement, or are not reasonably acceptable as described above, production of that mix design shall cease until additional TSR tests indicate the minimum requirement has been met and approved by the Engineer.

(4) At this point, the Contractor and QA personnel will sample, prepare and test all non-production TSR specimens together. At this same time, another sample of the same mix will be taken and submitted by QA to the Asphalt Design Engineer for TSR testing. Test results of the QC/QA TSR will be forwarded to the Asphalt Design Engineer as soon as the results are known. If the QC/QA test meets the minimum requirement, the Asphalt Design Engineer may elect not to perform TSR testing on the split portion of this sample.

(5) The Contractor has the option of preparing extra sets of specimens at any time for his own QC testing.

D. <u>Additional TSR Testing is Required:</u>

(1) When Warm Mix Asphalt (WMA) is being produced using new WMA technologies or NCDOT-Approved WMA Technologies with "Trial Approval" status:

a) One TSR prior to initial production for each plant at the following minimums: one TSR for Surface mixes, one TSR for Intermediate mixes, and one TSR for Base mixes; <u>and</u>

b) One TSR for every 15,000 tons for each JMF, with the first production TSR coming within 7 calendar days after beginning production of each new mix design.

(2) When Warm Mix Asphalt (WMA) is being produced using Approved WMA Technologies with "Limited Approval" (or higher) status:

One TSR within 7 calendar days after beginning production of each new mix design.

(3) When a change is made in the non-strip additive or dosage of any mix design, unless otherwise approved by the Engineer.

NOTE: In this case, TSRs shall be performed by QC personnel and approved by the Engineer prior to production of that mix to the project.

(4) When deemed necessary by the Engineer.

NOTE: The Engineer may allow TSR testing for each plant at the following minimums: one TSR for Surface, one TSR for Intermediate, and one TSR for Base. This can only be allowed where a given set of materials have shown a good history of TSR results.

7.16.2 <u>Equipment</u>

A. Gyratory Compactor - meeting the requirements of Section 7.11.2.
B. Vacuum Container - meeting the requirements of Section 7.12.2 (Maximum Specific Gravity).
C. Vacuum Pump - meeting the requirements of Section 7.12.2 (Maximum Specific Gravity).
D. Manometer and Vacuum Gauge - meeting the requirements of Section 7.12.2 (Maximum Specific Gravity).
E. Balance and Water Tank - meeting the requirements of Section 7.14.2 (Bulk Specific Gravity).
F. Water Bath - capable of maintaining a temperature of 140 ± 2°F (60 ± 1°C).
G. Water Tank - capable of maintaining a temperature of 77 ± 2°F (25 ± 1°C).
H. Bags or Containers - heavy-duty leak proof plastic bags or containers for temperature conditioning of specimens.
I. Loading Jack or Test Press - with ring dynamometer or load cell as required in AASHTO T 245 that produces a uniform vertical movement of 2 in. (50 mm) per minute. Must be a recording test press, or a test press that will maintain the peak load reading after the specimen has broken.
K. Loading Strips - steel loading strips with a concave surface having a radius of curvature equal to the nominal radius of the test specimen. The loading strips shall be 0.75 in (19.1 mm) wide for specimens 150 mm in diameter. The length

of the loading strips shall exceed the final compacted thickness of the specimens. The edges of the loading strips shall be rounded by grinding. The Lottman Breaking Head is an acceptable substitute for the Loading Strips.

L. Oven - a forced-draft oven, thermostatically controlled, capable of maintaining any desired temperature setting from room temperature to 350°F ±5 °F (176°C ± 3°C).

M. Metal Pans - having a surface area of 75-200 in.^{2} (48,400-129,000 mm^2) and a depth of 1 - 2 in. (25 - 50 mm).

7.16.3 <u>Sample</u>

A. Laboratory-Mixed, Laboratory-Compacted Specimens:

(1) Prepare at least eight (8) gyratory test specimens using the same blend as the mix design and the optimum binder content. Compaction of the test specimens shall be completed using a Gyratory Compactor.

(2) After mixing, the mixture shall be placed in the required pan at a depth of approximately 1 in. (25 mm) and cooled at room temperature for 2 ± 0.5 hours. Then, the mixture shall be placed in a 140 ± 5°F (60 ± 3°C) oven for 16 ± 1 hours for curing. The pans should be placed on spacers to allow air circulation under the pan if the shelves are not perforated.

Note: If the minimum TSR value can be achieved without the curing period, the Engineer may waive this requirement once satisfactory results are shown.

(3) After curing, place the mixture in an oven for 2 hours ± 10 minutes at the compaction temperature ±5°F (3°C) prior to compaction.

Note: The compaction temperature for the specimen should be that recommended for the type binder being used (See Section 7.11.3 for temperatures).

(4) The mixture shall be compacted to a height of 95 ± 5 mm with 7.0 ± 0.5% air voids (ALL mix types).

(5) All other factors should remain constant during the compaction process.

Note: Due to the elevated void content and potential instability of the specimens, ensure each is adequately cool and stable prior to removal from the mold.

B. Plant-Mixed, Laboratory-Compacted Specimens:

(1) Obtain a 200 lbs. sample of plant mix from a truck in accordance with Section 7.5.

(2) Prepare at least eight (8) gyratory test specimen using plant-produced mix meeting the individual control limits of the applicable Job Mix Formula. Compaction of the test specimens shall be completed using a Gyratory Compactor.

(3) No loose-mix curing as described in Section (A) above shall be performed on plant-produced samples. After sampling, place the mixture in an oven until it reaches the compaction temperature ±5°F (3°C).

Note: The compaction temperature for the specimen should be that recommended for the type binder being used (See Section 7.11.3 for temperatures).

(4) The mixture shall be compacted to a height of 95 ± 5 mm with 7.0 ± 0.5 % air voids (ALL mix types).

(5) All other factors should remain constant during the compaction process.

Note: Due to the elevated void content and potential instability of the specimens, ensure each is adequately cool and stable prior to removal from the mold.

7.16.4 <u>Evaluation of Test Specimens and Grouping</u>

1) Allow the compacted specimens to cool to room temperature 77 ± 9°F (25 ± 5°C).
2) Determine the height of each specimen from the Gyratory Printout.
3) Determine the Bulk Gravity (G_{mb}) of each specimen using the methods described in Section 7.14 or 7.15.
4) Determine the Maximum Specific Gravity (G_{mm}) on an uncompacted sample of the <u>same mix</u> using the methods described in Section 7.12 or 7.13.
5) Calculate the Percent Air Voids (VTM) for each specimen. Specimens for ALL mix types must have 7.0 ± 0.5% voids.
6) Sort specimens into two (2) subsets so that the average air voids of the two subsets are approximately equal.
7) Allow specimens to remain at room temperature for 24 hours before proceeding.

7.16.5 <u>Preconditioning and Testing of Specimens</u>

One subset will be tested dry and the other will be partially vacuum-saturated, and warm water conditioned before testing. Both subsets shall be tested at the same time.

A. DRY Subset

1) The four dry specimens should be stored at room temperature 77 ± 9°F (25 ± 5°C) until testing.

2) Before testing, the dry specimens shall be placed in heavy-duty leak-proof plastic containers.
3) The specimens shall then be placed in a 77 ± 2°F (25 ± 1°C) water tank for 2 hours ± 10 minutes. The specimens should have a minimum of 1 in. (25 mm) of water above their surface.
4) Remove the specimens from the water tank and place in the testing head. Care must be taken so that the load will be applied along the diameter of the specimen.
5) Apply the load to the specimen using the loading jack until the specimen fails. The rate of loading should be constant at 2 in. (50 mm) per minute. Record the load at failure in Newtons.
6) Remove the specimen from the machine and pull apart at the break in the specimen. Inspect the interior surface for stripping and record the observations.
7) Using an infrared thermometer, record the internal temperature of each specimen after they are broken apart.

B. WET Subset
1) Place a specimen in the vacuum container supported above the container bottom by a perforated spacer.
2) Fill the container with water at 77 ± 2°F (25 ± 1°C) so that the specimen has at least 1 in. (25 mm) of water above its surface.
3) Apply a vacuum of 10 - 26 in. of Hg (13 - 67 kPa) for a short time (approximately 5 to 10 minutes) to saturate the specimen.
4) The acceptable percent saturation is between 70 - 80 %.
   Note: Saturation times vary with vacuum pump type and condition.
5) Determine Percent Water Pickup by comparing SSD weight after saturation with SSD weight before Saturation.
6) Determine the Percent Saturation by comparing the volume of absorbed water after saturation with the volume of air voids before saturation. Preferred saturation is approximately 75%.
   a) If the Percent Saturation is between 70 - 80 %, proceed to the next step.
   b) If the Percent Saturation is less than 70 %, repeat above steps (1) - (3) using more vacuum and/or time.
   c) If the Percent Saturation is above 80 %, the specimen should be considered damaged and will be discarded. Repeat above steps (1) - (3) on the remaining specimens using less vacuum and/or time.
7) After all of the Wet Subset have been correctly saturated, place the specimens in a water bath at 140 ± 2°F (60 ± 1°C) for 24 ± 1 hours. The specimens should have a minimum of 1 in. (25 mm) of water above their surface.
8) Remove the specimens from the 140 ± 2°F (60 ± 1°C) water bath and place in another water tank at 77 ± 2°F (25 ± 1°C) for 2 hours ± 10 minutes. The specimens should have a minimum of 1 in. (25 mm) of water above their surface. It may be necessary to add ice to the water tank to prevent the water temperature from rising above 77 ± 2°F (25 ± 1°C). Not more than 15 minutes should be required for the water tank to reach 77 ± 2°F (25 ± 1°C).
   Note: The Dry Subset should also be put in the 77 ± 2°F (25 ± 1°C) water tank at this time.
9) Remove the specimens from the water tank and place in the testing head. Care must be taken so that the load will be applied along the diameter of the specimen.
10) Apply the load to the specimen using the loading jack until the specimen fails. The rate of loading should be constant at 2 in. (50 mm) per minute. Record the load at failure in Newtons.
11) Remove the specimen from the machine and pull apart at the break in the specimen. Inspect the interior surface for stripping and record the observations.
12) Using an infrared thermometer, record the internal temperature of each specimen after they are broken apart.
13) Visually compare the fractured surfaces of the Wet and Dry Subset of the pills and record these results on the worksheet.
14) The Tensile Strength Ratio (TSR) is the percentage that the average wet tensile strength is of the average dry tensile strength. The averages will be computed from the two remaining specimens after discarding the high and low specimens of each subset.

7.16.6 <u>Report</u>

Report the TSR test results using Form M&T 612. The TSR will be reported to the nearest whole percent (1 %).

7.17 DRAINDOWN CHARACTERISTICS OF UNCOMPACTED ASPHALT MIX (NCDOT-T-305)

This test method covers the determination of the amount of draindown in an uncompacted asphalt mixture sample when the sample is held at elevated temperatures comparable to those encountered during the production, storage, transport, and placement of the mixture. The test is particularly applicable to mixtures such as porous asphalt (open-graded friction course) and Stone Matrix Asphalt (SMA).

7.17.1 General

This procedure can be used to determine whether the amount of draindown measured for a given asphalt mixture is within acceptable levels. The test provides an evaluation of the draindown potential of an asphalt mixture during mixture design and/or during field production.

This procedure may involve hazardous materials, operations, and equipment. This procedure does not purport to address all of the safety problems associated with its use. It is the responsibility of the user of this procedure to consult and establish appropriate safety and health practices.

For the purpose of this test method, draindown is considered to be that portion of material that separates itself from the sample as a whole and is deposited outside the wire basket during the test. The material that drains may be composed of either asphalt binder or a combination of asphalt binder and fine aggregate.

A sample of the asphalt mixture to be tested is prepared in the laboratory or obtained from field production. The sample is placed in a wire basket, which is positioned on a suitable container of known weight. The sample, basket, and container are placed in a forced draft oven for one hour at a pre-selected temperature. At the end of one hour, the basket containing the sample is removed from the oven along with the container and the weight of the container is determined. The amount of draindown is then calculated.

7.17.2 Equipment

A. Forced Draft Oven - capable of maintaining the temperature in a range from 250 - 350° F (120 - 175° C). The oven should maintain the set temperature to within ±3.6° F (±2° C).
B. Containers – plates or other suitable containers of appropriate size. The containers used should be of appropriate durability to withstand the oven temperatures. Cake pans or pie tins are examples of suitable types of containers.
C. Standard Basket - meeting the dimensions shown in Figure 1. The basket shall be constructed using standard 1/4 inch (6.3 mm) sieve cloth as specified in AASHTO M 92.
D. Balance - capable of being read to the nearest 0.1 gram.
E. Spatula, mixer, and bowls as needed.

7.17.3 Sample

A. Laboratory Prepared Samples:

1) Two samples are required at the optimum asphalt binder content. The draindown should be determined at two different temperatures: the anticipated plant production temperature as well as 27° F (15° C) above. For each temperature, two samples should be tested. Thus for one asphalt mixture, a minimum of four samples will be tested.
2) Dry the aggregate to constant weight and sieve it into appropriate size fractions.
3) Determine the anticipated plant production temperature.
4) Place into separate pans for each test sample the amount of each size fraction required to produce completed mixture samples having a weight of 1,200 ± 200 grams. The aggregate fractions shall be combined such that the resulting aggregate blend has the same gradation as the mix design. Place the aggregate samples in an oven and heat to a temperature not to exceed the mixing temperature determined above by more than approximately 50° F (28° C).
5) Heat the asphalt binder to the temperature determined above.
6) Place the heated aggregate in the mixing bowl. Add stabilizing fibers, hydrated lime, and/or other dry admixtures as specified to the dried aggregate. Thoroughly mix the dry components before the addition of the asphalt binder. Form a crater in the aggregate and add the required amount of asphalt binder. The amount of asphalt shall be such that the final sample has the same asphalt content as the mix design. At this point, the temperature of the aggregate and asphalt binder shall be within the limits of the mixing temperature established in Section (3) above. Using a spatula (if mixing by hand) or a mixer, mix the aggregate (and stabilizer if any) and asphalt binder quickly until the aggregate is thoroughly coated.

B. <u>Plant Produced Samples:</u>

1) Two samples should be tested at the plant production temperature.
2) Obtain samples of freshly produced asphalt mix in accordance with Section 7.5. Each sample should have a total weight of 1,200 ± 200 grams.

7.17.4 <u>Procedure</u>

1) Transfer the hot laboratory produced or plant produced uncompacted mixture sample to a tared wire basket. Place the entire sample in the wire basket. Do not consolidate or otherwise disturb the sample after transfer to the basket. Determine the weight of the sample to the nearest 0.1 gram (**M**). Care should be exercised to ensure that the sample does not cool more than 25° C below the test temperature.
2) Determine and record the weight of a container to the nearest 0.1 gram (**P_i**). Place the basket on the container and place the assembly into the oven at the determined production temperature for 1 hour ± 5 minutes. If the sample has cooled more than 25° C below the test temperature, the test should be conducted for 70 ± 5 minutes.
3) After the sample has been in the oven for the time specified, remove the basket and container from the oven. Determine and record the weight of the container plus draindown material to the nearest 0.1 gram (**P_f**).
4) Calculate the percent of mixture that drained by subtracting the initial container weight from the final container weight and divide this by the initial total sample weight. Multiply the result by 100 to obtain a percentage:

$$D = \frac{(P_f - P_i)}{M} X\ 100$$

where, P_i = initial plate weight (grams)
P_f = final plate weight (grams)
M = initial total sample weight (grams)
D = Percent Draindown (%)

7.17.4 <u>Report</u>

Report the average percent draindown to nearest one decimal place (x.x%) and include the test temperature used.

Figure 1
Wire Basket Assembly (Not To Scale)

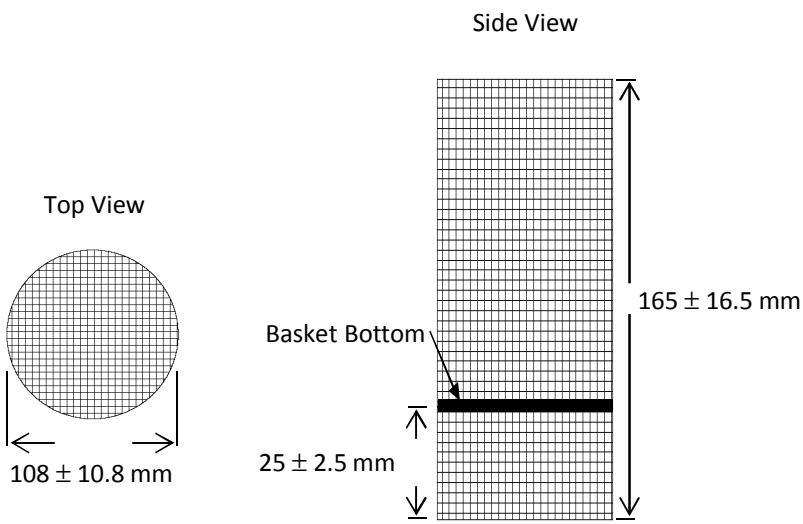

7.18 QMS FIELD CALCULATIONS

In order to monitor mix quality, several calculations other than those covered within specific test procedures, are necessary. Forms QA/QC-1 and QA/QC-1A contain the majority of those calculations. This section covers significant decimals and these calculations in detail.

7.18.1 Significant Decimals

The following rule for "rounding off" shall be used in all calculations. When the digit to be dropped (one digit beyond significant digit) is 0, 1, 2, 3, or 4, the preceding digit will not change. When the digit to be dropped (one digit beyond significant digit) is 5, 6, 7, 8, or 9, the preceding digit will be increased by one.

Example: Required significant decimal of 0.001
2.39**5**4 will be 2.39**5** (Drop the 4 and leave the 5 as is)
2.39**5**5 will be 2.39**6** (Drop the last 5 round up the first 5 to a 6)

Note: Each internal calculation used to arrive at a final combined result shall be calculated to at least one decimal place farther than the specified significant decimal. Do not round until after performing the final calculation.

Significant Decimals			
ALL Specific Gravities	0.001	**Gradation**	
Binder Content	0.1%	50 mm through 150 µm Sieves	1%
% Effective Binder Content (P_{be})	0.1%	75 µm Sieve	0.1%
% Volume of P_{be} (Effective)	0.1%		
% Binder Absorption (P_{ba})	0.1%	**Density**	
% Air Voids (VTM)	0.1%	% Compaction	0.1%
% Voids in Mineral Aggregate (VMA)	0.1%		
% Voids Filled with Binder (VFA)	1%	Tensile Strength Ratio (TSR)	1%
		% Draindown	0.1%
Dust/Effective Binder Ratio	0.1%	% G_{mm} @ N_{ini} and % G_{mm} @ N_{des}	0.1%
Unit Weight Total Mix	0.1 lbs	G_{mb} @ N_{ini} Correction Factor	0.001
% Moisture	0.1%	Corrected G_{sb}	0.001

7.18.2 Voids in Total Mix (VTM) Calculation

The air voids determination is a relationship between maximum specific gravity (G_{mm}) and Gyratory bulk specific gravity (G_{mb} @N_{des}). Air voids can be calculated for both Gyratory compacted specimens and roadway compacted pavements (cores) using the following formulas.

A. Gyratory Compacted Specimens:
Voids in Total Mix (VTM) for each specimen will be calculated using the following formula:

$$\%VTM\ @\ N_{des} = \frac{G_{mm} - G_{mb}\ @\ N_{des}}{G_{mm}}\ X\ 100$$

where:
- G_{mm} is the sample maximum specific gravity, and
- G_{mb} @ N_{des} is the **individual** bulk specific gravity of each specimen

Note: The VTM of the 3 specimens will be averaged to determine the VTM for the total sample.

B. Roadway Compacted Specimens (cores):

In-place pavement air voids for each core sample may be calculated using the following formula:

$$Pavement\ In\text{-}Place\ Voids = \frac{Moving\ Avg.\ G_{mm} - Pavement\ Core\ G_{mb}}{Moving\ Avg.\ G_{mm}}\ X\ 100$$

where:

- Moving Avg. G_{mm} is the last moving average for that day's mix, and
- Pavement Core G_{mb} is the pavement core sample G_{mb}

Calculate air voids (VTM) to the nearest 0.1 percent (x.x %).

7.18.3 Aggregate Effective Specific Gravity (G_{se}) Calculation

The Aggregate Effective Specific Gravity (G_{se}) includes all void spaces in the aggregate particles except those that absorb asphalt.

Calculate the G_{se} value of the actual sample by using the following formula:

$$Calculated\ G_{se} = \frac{100 - P_b}{\left[\frac{100}{G_{mm}}\right] - \left[\frac{P_b}{G_b}\right]}$$

where:

- P_b is the actual sample asphalt percentage (ignition test results)
- G_{mm} is the actual sample Maximum Specific Gravity Test result
- G_b is from the JMF

Calculate G_{se} to three decimal places (x.xxx).

7.18.4 Voids in Mineral Aggregate (VMA) Calculation

VMA is the intergranular void space between the aggregate particles in a compacted paving mix that includes both the air voids and the volume of effective asphalt binder content, expressed as a percentage of the total volume of the sample. During mix design, VMA is calculated using the actual G_{sb} determined for the design mix. However, during field production, fluctuations of the aggregate blend rates, fluctuations of individual aggregate's specific gravity, and other factors may cause G_{sb} to change from the mix design value. Since it is impractical to determine the actual G_{sb} on each sample due to time constraints, the G_{sb} from the mix design can be corrected to reflect these variations. The sample G_{se} can easily be calculated from the sample G_{mm}. The mix design G_{sb} is then corrected based on the ratio of the mix design G_{se} to calculated G_{se}. The corrected G_{sb} is then used in calculating the sample VMA.

Step (1): Calculated the Corrected G_{sb} for the sample as follows:

$$Corrected\ G_{sb} = \frac{Calculated\ G_{se}\ \times\ Mix\ Design\ G_{sb}}{Mix\ Design\ G_{se}}$$

where:

- Calculated G_{se} is from actual sample (See 7.18.3 above)
- Mix Design G_{se} is from original mix design
- Mix Design G_{sb} is from original mix design

Calculate Corrected G_{sb} to 3 decimal places (x.xxx)

Step (2): Then calculate the VMA for the sample using the following formula:

$$\%VMA = 100 - \left[\frac{G_{mb}@N_{des} \times (100 - P_b)}{Corrected\ G_{sb}}\right]$$

where:

- G_{mb} @ N_{des} is the average specimen bulk specific gravity from QA/QC-1 Form
- P_b is the actual percent binder from the field test, and
- Corrected G_{sb} is the corrected aggregate bulk specific gravity from Step (1) above

Calculate VMA to the nearest 0.1 percent (x.x %).

7.18.5 Voids Filled with Asphalt Binder (VFA) Calculation

The voids filled with asphalt binder (VFA) is a relationship between the voids in the mineral aggregate (VMA) and the voids in the total mix (VTM). The voids filled with asphalt binder (VFA) is a determination of the percentage of the voids in the mineral aggregate (VMA) that is filled with effective asphalt (not including absorbed asphalt).

VFA is calculated using the following formula:

$$\%VFA = \frac{\%VMA - \%VTM}{\%VMA} \times 100$$

where:

- %VMA is the sample VMA as computed in 7.18.4 above (from QA/QC-1), and
- %VTM is the sample average as indicated in 7.18.2 above (from QA/QC-1)

Calculate VFA to the nearest 1 percent (x %).

7.18.6 Dust / Effective Binder ($P_{0.075}$ / P_{be}) Ratio Calculation

The Dust / Effective Binder ratio is a relationship between the Effective (non-absorbed) Asphalt Binder (P_{be}) and the amount of the $P_{0.075}$ in the mix. The Mix Design Specification requirement is 0.6 to 1.4 for all mixes.

The dust/effective binder ratio of the plant produced mix sample is calculated using the following formula:

$$Dust/Effective\ Binder\ Ratio = \frac{Washed\ P_{0.075mm}}{P_b - \%Absorption\ (Mix\ Design)}$$

where:

- Washed $P_{0.075}$ is the actual washed percent passing the 0.075 mm sieve,
- P_b is the actual percent asphalt binder from the field test, and
- % Absorption is the percent binder absorption from the Mix Design/JMF.

Calculate the Dust / Binder ratio to the nearest 0.1 percent (x.x%)

7.18.7 Percent G_{mm} @ N_{ini} Calculation

The Percent G_{mm} @ N_{ini} is a percentage number indicating resistance of a mix to compaction. It is the percentage that the mix bulk specific gravity achieved at the specified number of gyrations (N_{ini}) is of the known G_{mm} of the mix. Lower percentages generally indicate more resistance to compaction and therefore, more rut resistance under traffic.

Calculate % G_{mm} @ N_{ini} using the following formula:

$$\%G_{mm} \text{ @ } N_{ini} = \frac{Average\ G_{mb} \text{ @ } N_{ini}}{Actual\ Test\ G_{mm}} \times 100$$

where:

- Average G_{mb} @ N_{ini} is test result from the QA/QC-1SP Form and
- Actual Test %G_{mm} is test results from QA/QC-2 Form for the current mix test

Calculate %G_{mm} @ N_{ini} to the nearest 0.1 percent (x.x%).

7.18.8 Reporting of Test Data

The Contractor shall make all records available to the Engineer, upon request, at any time during project construction. All QC records and forms shall be completed and distributed in accordance with the most current version of this manual. In general, mix test data is required to be documented on the QC-1 Form and sent to the appropriate QA Lab by the beginning of the next work day after the test is completed, not to exceed 3 calendar days.

All mix test results are also to be input into the Quality Assurance Program (QAP) within 24 hrs. after the test is completed. If problems arise in meeting this requirement, QC personnel shall immediately notify QA personnel.

The Quality Assurance Webpage may be accessed via the following link:

https://apps.dot.state.nc.us/Vendor/QAP/login.aspx?ReturnUrl=%2fvendor%2fqap%2fDefault.aspx

7.19 ALLOWABLE RESAMPLING AND RETESTING FOR MIX DEFICIENCIES

The Contractor shall resample and retest for plant mix deficiencies when warranted as outlined in Section 7.20.3. Retesting shall be in accordance with the steps outlined below. The retesting shall be performed within 10 days of notification of QA test results. Retests for any mix deficiency other than those listed below will not be allowed unless otherwise approved by the Engineer. Should the Contractor elect not to resample and retest as outlined, all applicable mix shall be removed and replaced with mix that meets the Specifications.

TABLE 609-2
RETEST LIMITS FOR MIX DEFICIENCIES

Property	Limit
VTM	by more than ± 2.5%
VMA	by more than ± 2.0%
% Binder Content	by more than ± 1.0%
0.075 mm sieve	by more than ± 3.0%
2.36 mm sieve	exceeds both the Specification mix design limits and one or more of the above tolerances
TSR	by more than - 15% from Specification limit

7.19.1 Guidelines for Retests of Plant Mix Deficiencies

1. The QA Supervisor shall confirm that the test results meet the requirements for retesting as defined in Table 609-2 or in Section 7.20.3.
2. The QA Supervisor will verbally notify the Contractor, Division, and Project Engineer of removal and replacement due to deficiency, as soon as possible.
3. All proposed sampling and testing must meet NCDOT minimum specification requirements.
4. Sampling for retests will be by coring in-place mix from the roadway.
5. The increment of mix in question will be divided into sub-lots for retesting.
6. QC sampling and testing shall be in the DOT representative's presence. Testing shall be performed at the appropriate Contractor's QC Lab, unless otherwise specified by the Engineer.
7. Retest results will be evaluated by the QA Supervisor, through consultation with the Project Engineer and the Area Roadway Construction Engineer. The Contractor will be notified of the acceptance decision in writing by the Engineer.

7.19.2 Retest Procedures

1. Increment tonnage in question shall be located by station numbers on the roadway.
2. Increment tonnage in question shall be divided into approximate equal sub-lots, unless otherwise approved.
3. Increment tonnage of 375 tons or more must be divided into 3 sub-lots.
4. Increment tonnage of less than 375 tons will be divided into a minimum of 2 sub-lots, unless otherwise directed by the Engineer.
5. All sub-lots shall be marked on the roadway by the Contractor and verified by the Engineer.
6. Each sub-lot shall be cored at one random location sufficiently to yield enough mix to perform a full set of tests (% Binder, Gradation, G_{mb}, G_{mm}, VTM, and in-place Density). Only one set of samples will be allowed in each sub-lot, unless otherwise approved. Sub-lot samples shall be cores with a minimum diameter of 6 in. (150 mm). Pavement slabs or other irregular shapes will not be allowed, unless directed by the Engineer.
7. Within one working day of the samples being taken, the Contractor shall: square up the area from where the cores were taken by saw-cutting, remove all excess material, and clean, tack, and fill the area with hot asphalt mix of the same type. The Contractor shall then compact the area to conform to the surrounding pavement to the Engineer's satisfaction.
8. Full depth cores must be satisfactorily separated by mix layer by the Contractor.
9. All necessary traffic control shall be the Contractor's responsibility.
10. Core samples from the same sub-lot will be combined for testing, samples from different sub-lots shall not be combined for testing.

11. QC test results shall be reported on Form QA-2A separately by sub-lot. All QC test results must be immediately furnished to the QA Supervisor.
12. Department personnel shall be present during all sampling and testing. Testing shall be performed by the QC personnel at the appropriate Contractor's QC Lab, unless otherwise specified by the Engineer.
13. The average test results from asphalt mix accepted and allowed to remain in place shall be used in place of the original QC plant test results. This would include QMS Forms and charts used for acceptance.
14. Sub-lot values are for final disposition and payment only. The appropriate QMS forms and charts will use original QC test results.
15. The increment tonnage in question will be evaluated and may be accepted based on each sub-lot's test results. QC personnel will not be held retroactively responsible for any actions that would have been required as a result of replacement of QC data by Quality Assurance.

7.20 QUALITY ASSURANCE (QA) SAMPLING AND TESTING

Quality Assurance (QA) is the Department's process of assuring that the Contractor's Quality Control (QC) process and testing is an accurate representation of the quality of the mix being produced. This process applies to all materials that are included in asphalt mix production, including asphalt mix, binder, aggregates, RAP, and RAS. Quality Assurance will be accomplished in the following ways:

1. by testing Verification Samples taken independently of the Contractor's QC samples at a frequency equal to or greater than 20% of the QC sample frequency;
2. by conducting Assurance testing of split samples obtained by the Contractor at a frequency equal to or greater than 5% of the quality control frequency;
3. by periodically observing sampling and testing procedures performed by the Contractor;
4. by monitoring required control charts tracking test results of control parameters;
5. by directing the Contractor to take additional samples at any time and any location during production (in lieu of the next scheduled random sample for that increment);
6. by conducting audits;
7. by any combination of the above.

NOTE: The above Verification and Quality Assurance percentages will reset at the beginning of each calendar year. This is done in conjunction with the accumulative tonnage reset of Quality Control lot tonnages at the beginning of each calendar year.

In all cases, the Department's Quality Assurance and Verification testing will be independent of the Contractor's tests. The Department's program will be conducted by certified QMS technicians. The Engineer will conduct assurance tests on both split QC samples taken by the Contractor and verification samples witnessed or taken by the Department. These samples may be obtained from any location in the process, and selected at random by the Department. The frequencies will be equal to or greater than those specified above. Results of QA tests (including verification tests) will be provided to the Contractor within 5 calendar days (excluding official state holidays) after the sample has been obtained.

7.20.1 Split Sampling and Testing Guidelines for Plant Mix

The Engineer may select any or all split samples for assurance testing. When the Department picks up its portion of any split sample, the matching Referee sample shall also be taken into possession by QA personnel. Differences between the Contractor's and the Department's split sample test results from a given lot will be considered acceptable if within the Limits of Precision from Table 609-3. In addition, RAP samples must meet the % binder and gradation tolerances specified in Table 1012-4 and RAS samples must meet the % binder and gradation tolerances from Table 1012-2 (See Section 8).

TABLE 609-3 LIMITS OF PRECISION FOR TEST RESULTS	
Mix Property	**Limits of Precision**
25.0 mm sieve (Base Mix)	± 10.0%
19.0 mm sieve (Base Mix)	± 10.0%
12.5 mm sieve (Intermediate Mix)	± 6.0%
9.5 mm sieve (Surface Mix)	± 5.0%
4.75 mm sieve (Surface Mix)	± 5.0%
2.36 mm sieve (All Mixes)	± 5.0%
0.075 mm sieve (All Mixes)	± 2.0%
Asphalt Binder Content	± 0.5%
Maximum Specific Gravity (G_{mm})	± 0.020
Bulk Specific Gravity (G_{mb})	± 0.030
TSR	± 15.0%
QA retest of prepared QC Gyratory Compacted Volumetric Specimens	± 0.015
Retest of QC Core Sample	± 1.2% (% Compaction)
Comparison QA Core Sample	± 2.0% (% Compaction)
QA Verification Core Sample	± 2.0% (% Compaction)
Density Gauge Comparison of QC Test	± 2.0% (% Compaction)
QA Density Gauge Verification Test	± 2.0% (% Compaction)

The Engineer will immediately investigate the reason for differences if any of the following occur:

1. QA test results of QC split sample do not meet the limits of precision (Table 609-3), or
2. QA test results or QC split sample do not meet the allowable re-test limits (Table 609-2), individual test control limits, or the specification requirements.

If the potential for a pavement failure exists, the Engineer may suspend production, wholly or in part, in accordance with Article 108-7 while the investigation is in progress. The Engineer's investigation may include, but not be limited to: review and observation of the QC technician's sampling and testing procedures, evaluation and calibration of QC and QA testing equipment, comparison testing of other retained quality control samples, and/or comparison testing of additional density core samples.

<u>The Referee testing process for Split samples is as follows:</u>

1. When differences between the QC and QA Split samples are not within the allowable limits of Table 609-3, the Referee sample will be tested jointly by QA and QC personnel.
2. If the Referee sample is within the limits of precision as defined in Table 609-3, when compared to the QC sample representing that lot, the QC result will be used as the final test result.
3. If the Referee sample fails to be within the limits of precision as defined in Table 609-3, when compared to the QC sample representing that lot, the results of the Referee test will replace the QC test results for the lot.

The Engineer will periodically witness the sampling and testing being performed by the Contractor. If the Engineer observes that the sampling and quality control tests are not being performed in accordance with the applicable test procedures, the Engineer may stop production until corrective action is taken. The Engineer will promptly notify the Contractor of observed deficiencies, both verbally and in writing. The Engineer will document all witnessed samples and tests.

7.20.2 Verification Sampling and Testing Guidelines for Plant Mix

The FHWA Regulations for Quality Control/Quality Assurance programs utilized for acceptance of asphalt pavements contain specific requirements for verification sampling and testing. These must be adhered to in order to conform to the FHWA requirements. The Engineer will obtain verification samples for testing independent of the Contractor's quality control process. These samples will be split for testing by the Department and optional testing by the Central lab (or another Division QA Lab) if there are unacceptable differences in QA / QC results.

When the Engineer takes a Verification sample, enough mix will be obtained to allow for two separate testing portions. The first portion will be tested and designated as the Verification sample. The second portion will be designated as the Dispute Resolution (DR) sample. This sample will be used in the investigation process should any discrepancies between Contractor and Department samples occur for a given lot.

The Department's current guidelines related to mix testing for verification purposes are as follows:

a. A minimum 100 lbs. sample taken at any point during production at either the plant site or on the roadway. All samples shall be split in accordance with Section 7.5, with the appropriate portion being given to the Contractor for optional testing. The Dispute Resolution (DR) portion of the sample shall be stored at the QA Lab until it is either needed for testing or determined that it is no longer needed.
b. QA Personnel will direct the QC technician to obtain the verification sample. The QA technician shall be present throughout the Verification sampling process to witness procedures and will take immediate possession of the sample for transport back to the QA laboratory. If a properly certified QC technician is not available at the time of the sampling, the QA technician will obtain the sample as required. The sample shall be taken by either certified NCDOT Level I or Level II Plant technician.
c. Samples taken at a rate of 20% of the required number of QC samples.
d. Verification samples will be in addition to the 5% minimum required QA comparison test of the QC split samples.
e. The Department's Verification sample test results from a given lot shall be within the Individual Test Control Limits of Table 609-1 and meet all applicable specification requirements when compared to the appropriate Job Mix Formula (JMF). The Verification sample test results will be compared to the JMF using the following parameters: gradation (2.36 and 0.075mm sieves), binder content, VTM, & VMA.
f. If the Verification test results are not within the Individual Test Control Limits of Table 609-1, the QA Supervisor will investigate the reason(s) for the difference. If the potential for a pavement failure exists, the Engineer may suspend production, wholly or in part, in accordance with Article 108-7 while the investigation is in progress. The Engineer's investigation may include, but not be limited to: review and observation of the QC technician's sampling and testing procedures, evaluation and calibration of QC and QA testing equipment, comparison testing of other retained quality control samples, and/or comparison testing of additional density core samples.
g. Verification samples will be assigned numbers by the QA Supervisor. These numbers will be per mix design per plant and will correspond to the QC sample numbers. The number will begin with the year, followed by a dash, followed by the corresponding QC sample number for that 750 ton increment, followed by a "V". For example: 12-1V if from 1st 750 ton QC increment, 12-12V if from 12th 750 QC increment, etc.
h. Documentation of verification sampling and testing will be on QAP and the appropriate QMS forms, which will be maintained by the QA Supervisor in the appropriate plant file. These samples shall be logged by the QA Supervisor on Form QA-3. If the verification sample results validate the QC results for the same 750 ton increment, these verification results shall be plotted on the Contractor's QC charts for information. Should the verification results and/or the investigation by the QA Supervisor determine the QC results for that same lot to be incorrect, the correct results as determined by the Department shall replace the applicable QC data on the control charts.
i. Verification TSR tests shall be conducted at the frequency and in accordance with the procedures specified in Section 7.16.1.

7.20.3 Dispute Resolution Testing Guidelines for Plant Mix

The Dispute Resolution process for lots with both V and QC samples will be based on the following criteria:

1. IF both QC and V results are within the Individual Limits defined in Table 609-1,
   THEN – Use QC results for acceptance of the lot.
2. IF either QC or V results are outside of the Retest Limits (in Remove and Replace category) defined in Table 609-2,
   THEN – Sublot based on the retest procedures (Section 7.19) where applicable.
3. IF both QC and V results are outside the Individual Limits (Table 609-1), but are within the Retest Limits (Table 609-2),
   THEN – Use QC to calculate the appropriate pay factor for the lot.
4. IF V results are outside the Individual Limits defined in Table 609-1 and within the Retest limits, but QC passes,
   THEN – Sublot based on the retest procedures (Section 7.19) where applicable.
5. IF QC results are outside the Individual Limits defined in Table 609-1, but V passes,
   THEN – Use QC to calculate the appropriate pay factor for the lot.

Notes:

A. For the above scenarios, if the V results fall outside either the Individual or Retest limits, the DR sample will be tested at the Central Lab (or another Division QA Lab) and the DR results will replace the V results for disposition.
B. For the above scenarios, if the QC results fall outside either the Individual or Retest limits, the QA split will be tested (and, if required, the Referee). Based on the findings, the Referee results may replace the QC results for disposition.

7.21 ACCEPTANCE BASED ON MIX TESTING

A high frequency of asphalt plant mix or density deficiencies may result in future deficient asphalt being excluded from acceptance at an adjusted contract unit price in accordance with Article 105-3. The Engineer shall document cases of frequent deficiencies and provide in writing the details of deficiencies to the Contractor with copies to the Pavement Construction Engineer and Asphalt Design Engineer. Upon receipt of these details, the Contractor shall develop a plan for corrective action and submit it to the Engineer in writing. Failure to satisfactorily correct repeated deficiencies may result in future deficient asphalt being excluded from acceptance at an adjusted contract unit price in accordance with Article 105-3. This acceptance process will apply to all asphalt produced or placed and will continue until the Engineer determines a history of quality asphalt production and placement is reestablished.

The Engineer will base final acceptance of the mix on the results of random testing made on split samples during the assurance process, verification samples, retests (if applicable) and validation of the Contractor's quality control process as outlined above and in Articles 609-6 & 609-9.

QC test results that have been proven incorrect, for any reason, will be replaced with the correct test results and related data as determined by the Engineer. QA comparison test results, verification test results, referee test results, and retest results may be used in making this determination. Any one of these or none of these results may be used as the correct results. Just because the referee sample is tested does not mean that its results will automatically be used. The data and the disposition of the replaced data are left to the discretion of the Engineer. Assistance in making this decision is available through the Asphalt Laboratory.

SECTION 8

RECYCLING OF ASPHALT PAVEMENTS

8.1 ASPHALT MIXTURE RECYCLING

Asphalt recycling is not a new idea, since the concept of recycling of asphalt pavements has been around for many decades. However, with increasing economic and environmental needs, asphalt recycling has become a more viable alternative. Aggregate, asphalt binder and fuel costs can be significantly reduced. Depending on the method of milling, the availability and quality of Reclaimed Asphalt Pavement (RAP) material, location of the plant relative to the project, the type of plant used and the amount of moisture in the RAP, a 20% to 40% cost savings may be realized. Also, in most cases where milling is specified, the Contractor retains the RAP material, which has no cost other than milling, processing and hauling. In addition to recycling of asphalt pavement material, the specifications allow the recycling of post manufacturing waste Reclaimed Asphalt Shingle (RAS) material, recycled concrete, tires, glass, slag, and other items.

8.2 RECYCLING METHODS

Recycled mixtures are produced successfully in both batch and drum-mix plants with some plant modifications required for both. All recycling of RAP/RAS is done by the "mixer heat transfer method".

In batch plant recycling, the RAP/RAS is fed either into the plant weigh box or into the hot elevator at stockpile ambient temperature. This is accomplished by use of a system made up of stockpiles, feeding bin, feeder and conveyor system. The virgin aggregate is processed as normal through the regular plant feeding system, dryer, elevator, and tower. The virgin aggregate is superheated in the dryer and transfers its heat to the cold RAP material either in the weigh box and plant mixer, or in the hot elevator, hot bins, weigh box, and plant mixer, depending on which type RAP/RAS introduction method is used. Additional asphalt binder is added into the plant mixer unit.

Drum mix plants are more suited for recycling. The most common technique used is the center inlet method, where the virgin aggregate enters into the burner end of the drum and the RAP material enters at approximately the center of the drum. The virgin aggregate has time to cool down the exhaust gases to prevent smoking of the recycled material. As higher percentages of RAP material are used, less virgin aggregate enters the drum, which increases the temperature exposed to the RAP material. Generally, the asphalt line is moved further down in the drum to a cooler zone to prevent excessive smoking of the recycled mixture. Probably the most complex problem of recycling with drum mix plants is air pollution. Smoke should be eliminated and if dust is generated, it should be captured in either a wet wash system or a baghouse. Both of these systems work fine, although certain precautions must be taken with baghouses. Generally, all of the minus $P_{0.075}$ particles in the RAP material are coated and cannot absorb unburned fuel oil or light ends from asphalt as the virgin fines do. This results in a slow buildup of a sticky cake on the bags and these bags have to be replaced more often. To reduce this problem, highly efficient combustion should be obtained and high quality asphalt should be used which does not emit excessive light ends.

In an attempt to control this air pollution problem, some drum mix manufacturers have modified their plants to further prevent the RAP and/or asphalt binder from direct exposure to the burner flame. Some drum plants utilize a coater box, located past the discharge chute to do this, while others use an inner and outer drum system to accomplish this objective. With the addition of a coater box to a drum plant, the RAP can be introduced further down in the drum and the asphalt binder can be added into the coater box. With the inner and outer drum system ("double barrel drum"), the RAP and asphalt binder are introduced between the two drums. Both of these methods will reduce pollution problems by reducing the amount of RAP and/or asphalt binder exposure to the heat source.

The RAP material is fed to the plant with a conventional cold feeder, although the bin should have a relatively small capacity with steep sides and a wide and long bottom opening for easy discharge and minimal sticking problems. To prevent further compaction of the RAP material, vibrators should not be used on the bin and the RAP should be fed slowly into the bin. Air cannons on the cold bin can satisfactorily prevent RAP consolidation. The belt or slat feeders used to transport the RAP to the weigh hopper or drum should be fairly wide and have sufficient horsepower to be used in a start-stop operation. The RAP feed system should be such that it will provide a good uniform flow of RAP to the mixer unit at all times.

NCDOT Specifications require that the RAP/RAS be automatically weighed and proportioned into the mix, whatever the type plant and/or method of RAP/RAS introduction being used. Batch plants that introduce the RAP into the weigh box accomplish this by simply weighing the RAP in the weigh box the same as it does the virgin aggregates. Batch plants which feed the RAP into the hot elevator, and all recycle drum mix plants normally will have a belt scale on both the RAP conveyor belt and the virgin aggregate conveyor belt which monitors the weights of these materials. These

two belt scales must be interlocked to automatically adjust to the correct percentages. These belt scales should be checked quarterly to insure 0.5% accuracy, and more importantly that the correct proportions of RAP/RAS and virgin aggregates are being maintained.

The amount of RAP/RAS which can be used in a recycled mix is controlled by:

1) the type plant being used;
2) the method of RAP/RAS introduction being used;
3) the desired grade of asphalt binder to be used;
4) the viscosity and penetration of the RAP/RAS asphalt binder;
5) the moisture content of the RAP/RAS;
6) the stockpile temperature of the RAP/RAS;
7) the temperature to which the virgin aggregate must be heated; and
8) the required temperature of the completed mix.

When recycled mixtures are being produced where more than one grade of asphalt binder is required, at least one tank will be needed for each grade of binder or the tank must be completely emptied before a different grade is added. ***Different grades of asphalt binder shall not be mixed***.

8.3 COMPOSITION OF RECYCLED ASPHALT MIXTURES (MIX DESIGN & JMF)

Article 610-3 and Subarticle 1012-1(F) of the NCDOT Standard Specifications addresses the requirements and policies concerning recycling of asphalt pavements (RAP). Subarticle 1012-1(E) of the NCDOT Standard Specifications addresses the requirements and policies concerning recycling of Reclaimed Asphalt Shingles *(RAS)*, Post-consumer RAS *(PRAS)* and Manufacturer-waste RAS *(MRAS)*. The Contractor has the option to use a recycled plant mix in lieu of virgin plant mix. However, all provisions of the Specifications for virgin mixes apply to recycled mixes. This means that the same design criteria tests, test frequencies, and quality control requirements will apply. Use of reclaimed asphalt pavement (RAP) materials is allowed on all standard plant mixes except Open Graded Asphalt Friction Course (OGAFC) mixes and Ultra-Thin Bonded Wearing Course (UBWC) mixes.

For Type RS9.5D and RS12.5D mixes, the maximum percentage of reclaimed asphalt material is 20% and the virgin asphalt binder shall be PG 76-22. For all other recycled mix types, the virgin binder PG grade is specified in Table 610-4 for the specified mix type. When the percentage RAP is greater than 30% of the total mixture, the Engineer will establish and approve the asphalt binder grade to be used.

TABLE 610-4
SUPERPAVE APPLICABLE VIRGIN ASPHALT GRADES

Mix Type	Percentage of RAP in Mix		
	Category 1[A]	Category 2[B]	Category 3[C]
	% RAP ≤ 20%	*21% ≤ % RAP ≤ 30%*	*% RAP > 30%*
All A and B Level Mixes, I19.0C, B25.0C	PG 64-22	PG 64-22	Established by Engineer
S9.5C, S12.5C, I19.0D	PG 70-22	PG 64-22	Established by Engineer
S9.5D and S12.5D	PG 76-22	-	-

A. Category 1 RAP has been processed to a maximum size of 2".
B. Category 2 RAP has been processed to a maximum size of 1" by either crushing and or screening to reduce variability in the gradations.
C. Category 3 RAP has been processed to a maximum size of 1", fractionating the RAP into 2 or more sized stockpiles.

Reclaimed asphalt shingle (RAS) material may constitute up to six (6) percent by weight of total mixture, except for Open Graded Asphalt Friction Course (OGAFC) mixes, which are limited to five (5) percent RAS by weight of total mixture. When both RAP and RAS are used, do not use a combined percentage of RAS and RAP greater than 20% by weight of total mixture, unless otherwise approved. When the percent of binder contributed from RAS or a combination of RAS and RAP exceeds 20% but not more than 30% of the total binder in the completed mix, the virgin binder PG grade must be one grade below (both high and low temperature grade) the binder grade specified in Table 610-2 for the mix type. In the event the percent of binder contributed from RAS or a combination of RAS and RAP exceeds 30% of the total

binder in the completed mix, the Engineer will establish and approve the virgin binder PG grade. Typically the contractor is required to perform additional binder testing on the RAP/RAS stockpiles to determine the characteristics of the final product being produced. In addition to the above limits, mix designs containing RAS will also have to meet the following limits:

	Maximum Contributed Binder from RAS	**Maximum Total Contributed Binder**
Surface Mixes	20%	40%
Intermediate & Base Mixes	23%	45%
Open-Graded Friction Course	18%	18%

During the mix design process, the producer may use either blending charts or performance tests (e.g. dynamic modulus testing) to determine the appropriate PG grade of virgin binder to be used to give the overall performance characteristics desired. The Asphalt Design Engineer will approve the final grade of virgin binder to be used.

The JMF will indicate the total percentage of asphalt binder required for the mixture (by weight of total mixture), the actual binder grade to be used and the percentage to be added to the mixture as required above. The "Pay Item" binder grade for the mix will be as specified in Table 610-2 for the appropriate mix type.

Samples of the completed recycled asphalt mixture may be taken by the Department on a random basis to determine the PG grading of the recovered asphalt binder. If the grading is determined to out of the specified range, the Engineer may require the Contractor to adjust the additional asphalt binder formulation and/or blend of reclaimed material to bring the grading within the desired range.

Anti-strip additives are required in all NCDOT mixes. Depending on TSR test results, different percentages may be necessary and will be indicated on the JMF. The minimum percentage is 0.25% liquid chemical additive (based on the percentage of new or additional binder) or 1.0% hydrated lime (by weight of total dry aggregate). The JMF will indicate the type, percentages, and sources to be used. See Section 4.8 for additional information. Should a change in the source of RAP/RAS be made, a new mix design and/or job mix formula may be required as outlined above.

8.4 PLANT CALCULATIONS AND CONTROL FOR RECYCLED MIXES

Depending on the type plant being used and the method of RAP introduction into the plant, some plant adjustments may be necessary in such areas as cold feed percentages and hot bin pull percentages.

The RAP is normally fed through a separate cold feed bin from the series of bins handling the virgin aggregates. Because of this, the blend percentages shown on the JMF cannot be used in setting and/or checking virgin cold feed bin percentages alone. A recalculation of the virgin aggregate percentages, excluding the RAP aggregate, must be performed. These percentages can be used for setting and checking the virgin aggregate blend by itself. The RAP cold feed percentage is then controlled by either weighing in the correct percentage into the weigh box, or by use of interlocked RAP and virgin belt scales which automatically proportions the correct RAP/Virgin percentage. This depends on the type plant and method of RAP introduction being used.

During production of a recycled mixture, adjustments in the virgin aggregates blend percentages shown on the JMF are occasionally needed; however, the % RAP, % RAS and % additional binder shall not be changed without the specific approval of the Asphalt Design Engineer or his representative.

Since drum mix plants do not have hot bins, naturally there will be no hot bin pull percentage adjustments necessary. The recycled mix gradation is controlled by the cold feed bin percentages and the aggregate (virgin and RAP) gradations. Neither will there be any hot bin percentage adjustments at a batch plant where the RAP is fed into the hot elevator. Since the RAP passes over the hot bin screens, along with the virgin aggregates, and is sized into different hot bins with the virgin aggregates, the hot bin pull percentages will be computed the same as for a virgin mix. Batch plants that incorporate the RAP into the mix by weighing it directly into the weigh box will require some adjustments to the hot bin pull percentages. The virgin aggregate batch weight must be reduced by the RAP batch weight and the hot bin percentages adjusted based on the effective gradation yield of the RAP. The virgin aggregate batch weight is calculated by subtracting the total of the percent aggregate of mix in the RAP, the percent binder of mix in the RAP, and the percent new binder, from the total batch weight of the mix. The hot bin pull percentages are then determined in the same manner as outlined for virgin mixes, except that the effective gradation yield of the RAP must be considered before

determining these percentages. The effective gradation yield of the RAP is computed by multiplying the percent of RAP aggregate only in the mix times the gradation of the RAP. This effective gradation yield will be provided into the mix in addition to the virgin aggregate gradation, which is controlled by the hot bin pull percentages. Therefore, this effective yield gradation of the RAP must be deducted from the desired JMF gradation requirements prior to determining the virgin aggregate hot bin pull percentages. When determining these percentages using this method, the figures derived will include both the virgin aggregate and the RAP. It may then be necessary to convert the virgin percentages to equivalent percentages for virgin aggregate only. This would be done simply by totaling the virgin aggregate percentages and dividing each individual percentage by that total. This conversion is necessary because the virgin aggregate batch weight is separate from the RAP batch weight and the combined virgin aggregate gradation can be better controlled by this method. The hot bin batch weights are then computed by multiplying the virgin aggregate hot bin percentages times the virgin aggregate batch weight. The RAP and new binder in the mix will be computed separately by multiplying those percentages times the total batch weight of the mix. The scales settings will be accumulative with the virgin aggregate and RAP weight set on the aggregate scales and the new binder weight set on the binder scales.

The QC technician is responsible for determining hot bin pull weights. QC technicians should refer to Section 7 of this manual for allowable adjustments in blended aggregates and hot bin pull percentages.

8.5 QUALITY CONTROL, HANDLING AND PROCESSING OF RAP AND RAS MATERIALS

Recycled mix quality is directly dependent on the RAP/RAS quality, handling and processing. Only uniform, good quality reclaimed asphalt materials should be used in recycled mixes. The RAP/RAS stockpiles should not be used as disposal sites for all types of unwanted materials. Good quality control is needed to keep contaminants in the RAP/RAS material to a minimum. Prior to stockpiling the RAP/RAS, the area should be cleared and leveled to provide a firm and level base. As with different types of aggregates, each different type of RAP/RAS material should be stockpiled separately. The lowest stockpile height that space will permit should be used and vehicle operation on the RAP/RAS stockpiles should be kept to a minimum to prevent consolidation. While not a specification requirement, it is highly recommended that the RAP/RAS stockpiles be covered to keep the material as dry as possible so that less fuel is needed to evaporate the excess moisture.

The RAP/RAS material should be pre-screened before crossing the belt scales on a drum plant or modified batch plant, or before entering the weigh box in a batch plant. The quality control requirements become more stringent as the amount of recycled content increases. When the percentage of RAP exceeds 30% of the mix, it is expected that approved RAP stockpiles will be constructed and testing will be performed to determine the gradation, asphalt content, and binder characteristics of the stockpile. The material and testing requirements are detailed in Table 610-4

It is the Contractor's responsibility to monitor the RAP/RAS stockpiles and verify that the gradation and asphalt content of the RAP/RAS being used is consistent and reasonably close to that of the RAP/RAS used when the recycled mix was originally designed. Recycled mixes are originally designed using samples of RAP/RAS stockpiles that the Contractor has on-hand at that time. These mix designs are considered current and may be usable for several years provided the RAP/RAS remains reasonably consistent and mix quality can be maintained. Although the Contractor's RAP/RAS source may change numerous times during that period, it would be almost impossible and very impractical to redesign these recycled mixes each time the RAP/RAS source changes. The primary concern should continue to be that of maintaining mix quality.

Certain QC field tests <u>must</u> be performed on RAP/RAS stockpiles (See Section 609-5 of the Standard Specifications). Once a stockpile of RAP/RAS has been sampled and these samples used in the mix design process, no other new source of RAP/RAS should be introduced into that same stockpile <u>without prior testing</u>. If the RAP/RAS is from a source other than the mix design source, testing must be performed to verify possible use in an existing job mix formula (JMF). Refer to Table 1012-4 of the Standard Specifications for new source RAP field binder content and gradation tolerances. RAP/RAS from the same source may continue to be placed into that stockpile. Normally this means that a different source of RAP/RAS should be stockpiled separately and tested prior to its use, provided there is a sufficient quantity of RAP/RAS to justify a separate stockpile. It is permissible to combine RAP/RAS from different sources, provided that it is processed and/or uniformly blended during stockpiling and prior to its sampling and testing.

If a Contractor desires to use a new source RAP in an existing recycled mix, he shall submit data on the gradation and binder content to the Department's QA Supervisor. The QA Supervisor may elect to run his/her own gradation and binder content test on the RAP. If the gradation and binder content are within the specified tolerances given in Table 1012-4, the QC technician may use the new source RAP in a mix subject to satisfactory volumetric tests results on the mix. Once mix production begins, normal random sampling of the mix shall be done. If a new source RAP stockpile is approved for use, the QC technician will perform binder content and gradation tests weekly to verify that it meets the requirements

of Table 1012-4. This procedure applies to all recycled mixes. All required tests shall be performed. If these test results meet the Specification requirements for the existing JMF, the new source RAP may continue to be used in the mix. If any of these test results are unsatisfactory, the QC technician shall contact the QA Supervisor.

If the QC gradation and/or binder content is not within the specified tolerances of Table 1012-4, the Asphalt Design Engineer should be notified. The QA Supervisor may investigate to determine if the QC test results are correct. A new mix design may possibly be required prior to any further use of RAP that doesn't meet requirements of Table 1012-4. The Asphalt Design Engineer will make this determination.

TABLE 1012-4
NEW SOURCE RAP GRADATION AND BINDER TOLERANCES
(Apply Tolerances to Mix Design Data)

	0 - 20 % RAP			**20 - 30 % RAP**			**> 30 % RAP**		
Pb, %	±0.7%			± 0.4%			± 0.3%		
Sieve Size	**Mix Type**			**Mix Type**			**Mix Type**		
(mm)	**Base**	**Inter.**	**Surf.**	**Base**	**Inter.**	**Surf.**	**Base**	**Inter.**	**Surf.**
25.0	±10	-	-	±7	-	-	±5	-	-
19.0	±10	±10	-	±7	±7	-	±5	±5	-
12.5	-	±10	±6	-	±7	±3	-	±5	±2
9.50	-	-	±8	-	-	±5	-	-	±4
4.75	±10	-	±10	±7	-	±7	±5	-	±5
2.36	±8	±8	±8	±5	±5	±5	±4	±4	±4
1.18	±8	±8	±8	±5	±5	±5	±4	±4	±4
0.300	±8	±8	±8	±5	±5	±5	±4	±4	±4
0.150	-	-	±8	-	-	±5	-	-	±4
0.075	±4	±4	±4	±2	±2	±2	±1.5	±1.5	±1.5

NOTE: Tolerances shall be applied to the RAP gradation shown on the mix design currently being used (M&T Form 601). New source RAP sampled and tested within these tolerances may be used in an existing JMF subject to satisfactory Gyratory and maximum specific gravity test results on the new mix.

TABLE 1012-3
APPROVED STOCKPILED RAP GRADATION AND BINDER TOLERANCES[A]
(Apply Tolerances to Mix Design Data)

P_b %	**± 0.3%**
Sieve Size (mm)	*Tolerance*
25.0	± 5%
19.0	± 5%
12.5	± 5%
9.50	± 5%
4.75	± 5%
2.36	± 4%
1.18	± 4%
0.300	± 4%
0.150	± 4%
0.075	± 1.5%

A. If more than 20% of the individual sieves are out of the gradation tolerances, or if more than 20% of the asphalt binder content test results fall outside the appropriate tolerances, the RAP shall not be used in HMA unless the RAP representing the failing tests is removed from the stockpile.

Do not add additional material to any approved RAP stockpile, unless otherwise approved by the Engineer.

Maintain a record system for all approved RAP stockpiles at the plant site. Include at a minimum the following: Stockpile identification and a sketch of all stockpile areas at the plant site; all RAP test results (including asphalt content, gradation and asphalt binder characteristics).

For RAS Stockpiles, if the gradation and binder content are within the specified tolerances given in the New Source RAS Binder and Gradation Tolerances Table (Table 1012-2), the QC technician may use the new source RAS in a mix subject to satisfactory volumetric test results on the mix. Once mix production begins, normal random sampling of the mix shall be done. If a new source RAS stockpile is approved for use, the QC technician will perform binder content and gradation tests weekly to verify that it meets the requirements of the New Source RAS Gradation and Binder Tolerances Table.

TABLE 1012-2
NEW SOURCE RAS BINDER and GRADATION TOLERANCES
(Apply Tolerances to Mix Design Data)

P_b %	**± 2.5**
Sieve Size (mm)	*Tolerance*
4.75	±5
2.36	±4
1.18	±4
0.300	±4
0.150	±4
0.075	±2.0

Subarticle 1012-1(E) of the NCDOT Standard Specifications addresses the requirements and policies concerning recycling of Reclaimed Asphalt Shingles *(RAS)*, Post-consumer RAS *(PRAS)* and Manufacturer-waste RAS *(MRAS)*.

8.6 COMPENSATION FOR RECYCLED ASPHALT PAVEMENTS

Current NCDOT Specifications allow a Contractor to furnish a recycled mixture in lieu of a standard virgin mixture, unless otherwise stated in the contract. It should be noted that the contract line code bid items do not distinguish between recycled mixes and standard mixes. Payment for a given type of mix will be at the same unit prices for both mixture and asphalt binder, regardless of whether or not a recycled mixture is used. This method of payment for the mix is used with the assumption that if a Contractor plans to use recycled mixes on a project, he will submit a cheaper bid price than if using virgin mixes, which should result in a cost savings to the Department.

The adjusted contract unit price will then be applied to the theoretical quantity of asphalt binder authorized for use in the plant mix placed during the partial payment period involved, except that where recycled plant mix is used, the adjusted unit price will be applied only to the theoretical number of tons of additional asphalt binder materials required by the JMF.

Unless otherwise agreed to in writing, the grade of binder to be paid for will be the grade specified for that mix type in Table 610-3 regardless of the grade actually used due to use of higher percentages of RAP. For example: The contract requires a S9.5C mix type. For S9.5C mix, 610-3 specifies a PG 70-22 binder be used. The Contractor elects to use 25% RAP in the mix. The contractor must now lower the virgin binder grade actually used to PG 64-22 in accordance with Table 610-4. However, the Contractor will be paid at the contract unit bid price for PG 70-22.

Any price adjustments made to the asphalt binder unit bid price due to binder price fluctuations will be applied only to the theoretical number of tons of virgin asphalt binder materials required by the job mix formula. All price adjustments will be based on grade PG 64-22 average FOB selling prices, regardless of grade used or required.

No separate payment is made for anti-strip additive. Compensation is considered incidental to the mix and/or binder price.

8.7 MILLING OF ASPHALT PAVEMENTS

Section 607 of the Standard Specifications addresses Asphalt Pavement Milling. It is important to understand that milling (pavement removal) is a separate entity from recycled pavements. Milling may or may not be done in conjunction with the production of a recycled mixture. Also, milled pavements may or may not be overlaid with a recycled mix. The connection between the two is that the RAP from a milling operation may be used in a recycled mix, within certain restrictions. The purpose of milling is not necessarily that of producing RAP solely for use in recycled pavements. The purpose(s) may include other factors and objectives as discussed below.

Section 607 of the NCDOT Standard Specifications covers milling of asphalt pavements; however, very often milling is covered by project special provisions in contracts. These project special provisions should always be checked since the method of measurement and payment may be different from the Standard Specifications.

When existing asphalt pavement is to be removed, the removal may be done by cold milling with equipment ("milling machine") that has been designed and built exclusively for pavement milling operations. There are many advantages of milling versus other pavement removal methods. The pavement can be removed quickly with minimum interruption to traffic flow and in some cases the restored pavement can be opened immediately to traffic. Milling is a safe system that involves very few hazardous obstructions in the roadway and is relatively pollution free. The removal of asphalt pavement by milling is not limited to interstate or primary highways, but is also affordable by cities and smaller communities as well as Federal and State agencies. The milling procedure consumes substantially less energy than other methods of pavement removal and the removed material can usually be used again without further processing.

Milling can correct several pavement problems while saving time and money by not having to adjust adjacent structures or geometric designs. Some of the problems which can be corrected by milling are rutting, washboarding, pushing, shoving and bleeding of asphalt pavements. Milling improves the texture for bonding of additional asphalt pavements and retains guard rail heights, curb heights, and bridge clearances. On multi-lane highways, the distressed lane can be milled with limited inconvenience to the traveling public. Also, the desired profile and cross-sections or roadways can be restored so that drainage systems can function properly.

The specifications require the use of milling machines equipped with an electronic control system which will automatically control the longitudinal profile and cross slope of the milled pavement surface through the use of a mobile grade reference(s), an erected string line(s), joint matching shoe(s), slope control systems, or other methods or combination of approved methods. An erected fixed stringline must be used when required by the contract. Unless stated otherwise, a mobile grade reference system capable of averaging the existing grade or pavement profile over a minimum 30 foot distance or by non-contacting laser or sonar type ski systems with at least four referencing stations mounted on the milling machine at a minimum length of 24 feet must be used. Locate the position of the grade control system such that the grade sensor is at the approximate midpoint of the mobile reference system.

A machine capable of leaving a uniform surface suitable for handling traffic without excessive damage to the underlying pavement structure must be used. Use a milling machine and other loading equipment capable of loading milled material to be used in other parts of the work without excessive segregation.

The existing pavement must be milled in a manner which will restore the pavement surface to a uniform longitudinal profile and cross section in accordance with typical sections shown in the plans. Where indicated in the plans or project special provisions, remove pavement to the specified average depth and specified cross slope. Establish the longitudinal profile of the milled surface by a mobile reference system on the side of the cut nearest the centerline of the road. Establish the cross slope of the milled surface by an automatic cross slope control mechanism or by a second skid sensing device located on the opposite edge of the cut. The Engineer may waive the requirement for automatic grade and/or cross slope controls where conditions warrant.

Thoroughly clean the milled pavement surface of all loose aggregate particles, dust, and other objectionable material. Disposing or wasting of oversize pieces of pavement or loose aggregate material will not be permitted within the right of way.

Pavement removal operations must be conducted in a manner that effectively minimizes the amount of dust being emitted. Plan and conduct the operation so it is safe for persons and property adjacent to the work, including the traveling public.

SECTION 9

ROADWAY PAVING OPERATIONS

9.1 INTRODUCTION

This section of the manual addresses asphalt paving operations, including planning, equipment requirements, spreading and finishing operations, compaction operations, and other related subjects. Also included are sections on the use and application of prime coats and tack coats. In this section we primarily discuss the actual construction operations. The following section of the manual will give more detail on the required sampling and testing requirements and procedures.

The Department and the Contractor are required to both have a QMS certified Roadway Technician with each paving operation on the project at all times that mix is being placed. During paving operations, the Department's certified QMS Roadway Technician has three primary responsibilities. These are:

1) to be certain that contract specifications are met;
2) to provide the Contractor every opportunity to meet the job specifications in the most cost-effective manner;
3) assist the contractor's QMS roadway technician in monitoring traffic control.

Likewise, the Contractor's certified QMS Roadway Technician has the responsibilities of:

1) monitoring all roadway paving operations;
2) monitoring all quality control processes and activities, to include stopping production or implementing corrective measures when warranted;
3) ensuring that the specifications are being met, that a high standard of workmanship is being achieved, that the required sampling and testing is being performed and traffic control devices are being used and maintained properly.

When these responsibilities are met by both parties, the public is literally guaranteed a pavement that will perform satisfactorily for a reasonable period of time. Meeting these responsibilities also ensures cooperation between the Contractor and the Department, which is essential for the construction of a quality pavement. To meet these responsibilities, the Contractor and Department personnel must have a courteous, cordial, cooperative, and professional relationship with each other. All Supervisors, Technicians, and other involved parties must thoroughly understand the job specifications. They must be familiar with the equipment necessary to perform all phases of the paving operations and be knowledgeable of proper use of the equipment required.

Before beginning paving, the certified Asphalt Roadway Technician for both the Department and the Contractor must assure that the subgrade or base course is properly conditioned and true to grade and, cross-sectioned as shown on the plans before paving operations begin. Prime coat must be applied when required in accordance with Article 600 of the Standard Specifications. In addition, tack coat must be applied when required in accordance with Article 605 and procedures detailed in this Manual. We will first discuss the placement of prime coats, next, the application of tack coats, followed by the placement of the asphalt mix. The Technicians, for both the Contractor and the Department, must be familiar with all aspects of quality paving practices if long lasting pavements are to be constructed.

9.1.1 The Asphalt Distributor

The asphalt distributor is one of the most important pieces of equipment on a paving project, prime coat, tack coat, or surface treatment operation (see Fig. 9-1). It is made specifically to apply liquid asphalt material uniformly and in proper quantities to a roadway surface. (see Article 600-5 of the Standard Specifications for distributor requirements). The asphalt distributor includes a truck or trailer-mounted insulated tank containing a heating system that is normally oil-fired to maintain the asphalt at the proper application temperature. An accurate thermometer must be mounted on the distributor in such a manner that the dial or indicator remains in full view at all times. The distributor shall include a spray bar system capable of uniformly applying the material and a hand-held spray attachment for applying asphalt to areas inaccessible to the spray bars.

Asphalt sprayed at an improper temperature may not be applied uniformly and this is sometimes hard to detect until months later when streaking and grooving may develop. The distributor has a power driven pump capable of handling asphalt products ranging from light, cold application liquid to heavy asphalt binders, heated to spraying viscosity.

Figure 9-1
Asphalt Distributor

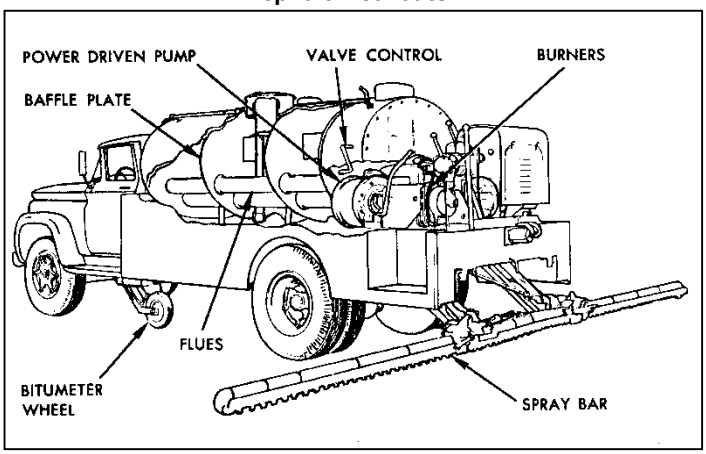

At the rear end of the tank is a system of spray bars and nozzles through which the asphalt is forced under pressure onto the surface of the road. The spray bar must have a constant uniform pressure along its entire length for equal output from all nozzles. Although the methods of maintaining pressure may vary, many distributors use gear type pumps to deliver the asphalt to the spray bar. On some distributors, pressure is regulated by a variable speed pump, while on others by constant pump speed and use of a pressure relief valve. The correct pressure is that which neither atomizes the asphalt nor distorts the fan of spray. Low pressure results in streaking from a non-uniform discharge of material from the individual nozzles, while excessively high pressure will atomize the asphalt and distort the spray fan. The manufacturer normally supplies charts and data which gives the proper pump speed or pressure for determining the discharge in gallons per minute for each nozzle size.

One of the most important parts of the distributor is the spray bar. To achieve proper results from the spray bar, the correct size nozzles for the job conditions must be selected. Nozzles should be checked for damage before use. The angle of the long axis of the nozzle openings must be adjusted so that the fans of spray will not interfere with each other. The nozzle angle varies according to the make of distributor, but is usually between 15° and 30°. It is important that all nozzles be set at the proper angle within close tolerances to provide proper overlap. In addition to a proper and uniform nozzle angle, the most important adjustment to insure uniformity of asphalt spray is the height of the spray bar above the pavement surface. It is important that the correct height be maintained during the entire application to provide proper overlap. An incorrect height of spray bar will result in streaking. For example, the best result with a 4" nozzle spacing comes from an exact triple lap of the fans, but with the 6" nozzle spacing, the height of the spray bar is too high and subject to wind distortion. In such a case, a double lap pattern should be used. For best results, the height of the spray bar should not vary more than 1/2". Some distributors have mechanical controls to maintain proper height.

Figure 9-2
Proper Nozzle Angle Setting

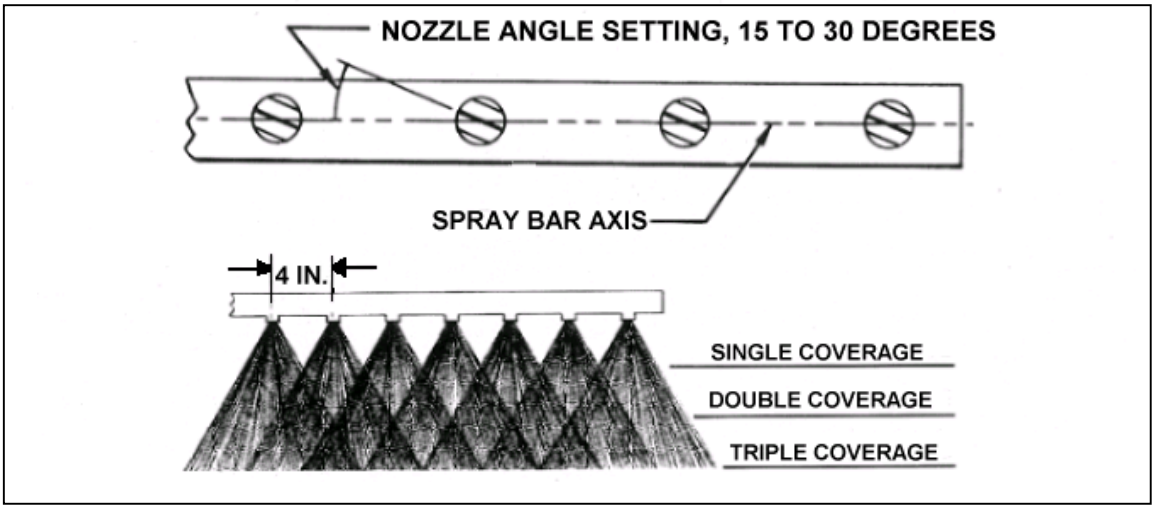

Controls for the distributor include a pressure gauge (which registers pump out-put) and odometer (which registers distance traveled in rate of travel). The odometer has connected to it a rubber tired wheel mounted on a retractable frame with a cable leading to the odometer dial in the cab of the vehicle. The rate of travel in feet per minute and the total distance traveled in feet are indicated on the dial. The odometer should be checked for accuracy and cleanliness at regular intervals.

Newer distributors usually have float type gauges and measuring sticks for indicating the volume of the contents of the tank. The stick used should be calibrated so that tank contents can be determined to the nearest 25 gallons. The calibration stick, chart, and the tank should have matching numbers. Calibration charts or devices must be kept with the distributor at all times.

9.1.2 Asphalt Delivery Tickets for Emulsified Asphalt

When a shipment of asphalt emulsion that is to be used as either prime or tack coat is received at an asphalt plant or on a project, a copy of the bill of lading will be furnished to the appropriate Resident Engineer and retained in their project records. When receiving asphalt emulsion, follow these guidelines:

1) Verify source of tack coat on Bill of Lading (BOL) as coming from terminal on approved NCDOT list.
2) Verify that BOL contains NCDOT assigned batch numbers. (First two numbers are the Approved Asphalt Terminal (AT) number).
3) Obtain a copy of the BOL for every shipment and include it with the materials received report (MRR) for each project. Note that in most cases, one BOL may represent several distributor truck loads, since many Contractors have tankers shipped to central locations and fill distributor trucks from the tanker.
4) BOLs may be obtained from the Contractor's project personnel on site or may be sent from plant personnel managing the tack shipment directly to the Resident Engineer's office. Arrangements for obtaining the BOL should be discussed prior to beginning work.
5) Confirm that all approved suppliers have an asphalt terminal (AT) number.
6) Confirm that BOL has supplier and transporters certifications recorded.
7) Create a record of net gallons delivered to the project.
8) Confirm that approved grade of material is recorded on BOL.
9) If BOL is lacking any required information, then decline that tack on the project until BOL is corrected.
10) For more detailed information refer to M&T Unit's "*Asphalt Emulsion Receiving Guide*" at the following website:

https://connect.ncdot.gov/resources/Materials/MaterialsResources/Asphalt%20Emulision%20Receiving%20Guide.pdf

9.2 PRIME COAT

Prime Coat is a sprayed application of a low viscosity liquid asphalt to a base course of untreated material. It is the initial incorporation of asphalt into the surface of a non-asphalt base course preparatory to any superimposed treatment or construction. The objective of priming a non-asphalt base may be any one or all of the following:

1) To waterproof the surface in order to prevent surface water from penetrating the base course or subgrade material.
2) To seal voids, coat and bond loose mineral particles and stabilize the surface being primed.
3) To provide temporary covers in cases of delayed pavement construction or planned stage construction.
4) To promote adherence of overlying asphalt courses or surface treatments to granular bases, including both ABC and soil type bases.

Prime will be applied to a non-asphalt base beneath an asphalt plant mixed pavement when required by the Project Special Provisions. Generally, prime is needed when any surface layer of asphalt pavement is being placed directly on an aggregate or soil base. If prime is not specified in the contract when a surface layer is to be placed directly on aggregate or soil base, consideration should be given to adding a prime coat. Prime required by the Project Special Provisions or Specifications may not be eliminated nor the grade of asphalt material specified changed (if specified) without the specific approval of the State Roadway Construction Engineer or his representative.

9.2.1 Grades, Application Rates and Temperatures for Prime Coats

All Prime Coat materials must meet the requirements of Article 1020-5 of the Standard Specifications. A particular brand or grade must be approved prior to use. A listing of approved prime coat materials is maintained by the Materials and Test Unit's NCDOT website under "Approved Products List - Prime Coat". Those parties who may not have

access to this listing may contact the Asphalt Design Engineer at the Materials & Tests Unit at phone number (919) 329-4060 or may visit their approved products web site located at:

https://apps.dot.state.nc.us/vendor/approvedproducts/

All currently approved prime coat materials are emulsified asphalts. Due to the Department's concerns about the environment, the use of cut-back asphalt (ones pre-thinned with another petroleum product) has been phased out. Unless the project special provisions specify that a particular prime coat material be used, the Contractor may select any grade from the approved list.

Prime coat shall be uniformly applied at a rate of 0.20 to 0.50 gallons per yd^2 or as noted on the approved list. The exact rate for each application will be established by the Engineer to 0.01 gallons per yd^2 and will be conveyed to the Contractor prior to application. The required rates of asphalt materials will be based on the volume of material measured at the application temperature. The application temperature of the prime coat material shall be in accordance with the manufacturer's recommendations or as approved by the Engineer.

The asphalt distributor is the piece of equipment used to apply prime coat material (see Section 9.1.1). Most distributors include gauges for measurement of the material within the tank. These may be used to determine the quantity used provided they are accurate. It is also acceptable for the Technician to "strap" the tank with a calibrated measuring stick having increments of 25 gallons or less. Each distributor must either be measured by the gauge or "strapped" with the stick before and after a "shot" in order to estimate the actual number of gallons to the nearest 10 gallons applied. When sticking the tank, the measurements must be made from the same spot on the rim along the centerline of the truck on the top opening with the tank level both times. The tank should always be level when measured, whether measured with the gauge or the stick.

The Roadway Technician should always check the amount of asphalt material applied against the amount received for each tanker load. The amount applied obviously cannot be more than the amount received. The directed rate of application and the actual rate of application of the prime coat will be recorded in the Pay Record Book.

The most current listing of approved Prime Coat Materials is on the Materials & Tests Unit's website under "Approved Products List-Prime Coats"

https://connect.ncdot.gov/resources/Materials/MaterialsResources/Approved%20Product%20List%20For%20Prime%20Coat%20Emulsions.pdf

9.2.2 Application of Prime Coat

Prime coat shall be applied only when the surface to be treated is free of standing water, at proper moisture content, and the atmospheric temperature away from artificial heat is 40°F or above for plant mix and 50°F or above for asphalt surface treatment. Prime shall not be applied on a frozen surface or when the weather is foggy or rainy. The base shall be cleaned of any objectionable material or other deleterious matter prior to placing prime coat. Prime coat should not be applied until the base to be treated has been approved by the Engineer. Requirements include approval by the laboratory of aggregates used in base courses, adequate density, proper grade and proper conditioning of the base material on which the prime is to be applied.

If in the opinion of the Resident Engineer or his Technician, the surface of the base has dried to such an extent that the surface dust will cause "dust bubbles" or "frog eye" in the prime coat, the Contractor will be required to dampen the base surface prior to application of the asphalt material. Care must be taken to uniformly dampen the surface without over wetting small areas. This dampening of the surface causes a greater and more uniform penetration of the prime coat material into the base course and should be done if the "frog eye" effect mentioned above is evident.

After the base has been conditioned in an acceptable manner and is sufficiently dry, a stringline shall be placed by the Contractor and checked by the Technician to serve as a guide for the distributor. The use of a stringline may be waived by the Resident Engineer if prime is to be placed adjacent to a curb and gutter or other structure where a true alignment can be obtained. For best application results, the following points should be observed:

1) Maintain uniform pressure on all spray nozzles. The fan of spray from each nozzle must be uniform and set at the proper angle with the spray bar (see Fig. 9-2).
2) The spray bar must be maintained at the proper height above the road surface to provide complete and uniform overlap of the spray fans.
3) The distributor road speed must be uniform.
4) Before the start of the work the spread of the distributor spray bars should be checked. The spraying operation should be checked frequently to be sure that the nozzles are the proper height from the road surface and are working fully.

5) When prime is to be utilized adjacent or parallel to bridge floors, curbs, handrails and all other appurtenances, care must be taken to prevent spraying, splattering, or tracking the prime on the structures.

The prime coat should be allowed to thoroughly penetrate the base as recommended by the manufacturer (minimum 24 hours) before any traffic is permitted upon it. If at the end of the curing period there remains spots of excess asphalt on the road's surface, the Resident Engineer may require such spots to be hand broomed or blotted with aggregate to prevent the prime from being picked up. When there are spots that have excess asphalt or for some other reasons the asphalt fails to penetrate the base, hand-brooming or spreading of granular material may be necessary. Granular material required to blot excess prime material applied due to the Contractor's negligence or convenience will be at his expense.

To insure a tight and smooth base, the Engineer may require that the prime be rolled with pneumatic rollers as soon as the prime has penetrated the base enough to prevent it from picking up. Before beginning placement of any surface treatment or plant mix, all the water must have evaporated and all loose granular material swept from the base. If in the opinion of the Resident Engineer it is impracticable to keep traffic off the prime, the Contractor may be directed to spread blotting sand over the prime coat to prevent it from being picked up, in accordance with Section 818 of the Standard Specifications.

9.2.3 Determination of Prime Coat Rates and Pay Quantities

The procedures, which follow, serve as a guide by which rate applied and pay quantities for prime coat, curing seal and other similar asphalt items will be computed and recorded.

The quantity of prime coat and curing seal to be paid for will be measured at the application temperature. The pay records must indicate the actual computed rate for each shot. The quantity of prime coat to be paid for will be the actual number of gallons of prime coat material satisfactorily placed on the roadway.

Example Calculation of Prime Coat Rate and Pay Quantity

945 gallons of EA-P was applied 12 ft. wide from Sta. 125+30 to 144+00.

The Engineer directed a rate of 0.35 gals./yd^2. Compute the actual rate to be applied:

$$\boxed{Rate\ of\ Application = \frac{(No.\ of\ Gallons\ Applied)}{(No.\ of\ Square\ Yards\ Primed)} = \frac{Gallons}{Square\ Yards}}$$

For a Rectangular Area: $Length = Ending\ Station - Beginning\ Station = (144 + 00) - (125 + 30) = 1870\ LF$

$$Rate\ of\ Application = \left[\frac{(No.\ of\ Gallons\ Applied)}{\left(\frac{Length\ (ft.) \times Width\ (ft.)}{9\ ft^2/yd^2}\right)}\right] = \left[\frac{945\ gals.}{\left(\frac{1870\ ft.\ \times\ 12\ ft.}{9\ ft^2/yd^2}\right)}\right] = 0.379\ gals/yd^2$$

Say: 0.38 gals/yd^2

Actual Pay Gallons = 945 gals.

(Note: Significant Decimal for Prime Coat Rate is 0.01)

9.3 TACK COAT

A tack coat is the spray application of liquid asphalt to an existing asphalt or concrete surface to promote a bond between old pavement surfaces and the new asphalt layer. The four essential requirements for a satisfactory tack coat application are:

(1) Existing pavement surface must be thoroughly cleaned.
(2) Proper rate of application must be assured. (Table 605-1)
(3) Uniform coverage over the entire area to be paved must be assured.
(4) Allow tack to thoroughly break before placing the new asphalt layer.

Tack coat must be applied beneath each layer of asphalt plant mix to be placed. Where a prime coat or a newly placed asphalt surface treatment mat coat (AST) has been applied, it is normally not necessary to tack (see Section 9.3.3 for other exceptions). The Specifications allow tack coat to be applied only when the surface is dry and when the air temperature is 35°F or above measured at the location of the paving operation away from artificial heat. Surface preparation is the key to a good tack coat. Cleanliness of the existing asphalt or concrete surface cannot be overly stressed. Any dust, dirt, clay, fuel oil, grass, or other foreign matter on the surface will prevent the tack coat from adhering to the surface, causing the overlay layer not to be bonded and therefore, must be removed. This debris could cause it to "slip" or "shove" under rolling or traffic. Oftentimes, this cleanliness can only be achieved with power brooms and/or by flushing with water and scrubbing. The Technician must assure that all areas are properly cleaned and tacked before the pavement layer is placed.

The Contractor must remove the grass, dirt and other material from the edge of the existing pavement prior to placement of the tack coat. This is important since this will prevent the bonding of the asphalt overlay. However, the Contractor should be cautioned about removing excessive amounts of grass and earth material from the pavement edge. This operation should not be conducted in a manner which allows the material to be thrown into the roadway ditches or which creates a hazardous traffic condition.

The Contractor should take necessary precautions to limit the tracking and/or accumulation of tack coat material on either existing or newly constructed pavements. Excessive accumulation of tack may require corrective measures. To assist internal and external field personnel with proper tack coat operations and guidelines, a “Tack Coat – Best Practices Field Guide” was developed in 2012 and can be found at the following link:

https://connect.ncdot.gov/projects/construction/Documents/Tack%20Coat%20Best%20Practices%20Field%20Guide%202012.pdf

9.3.1 Tack Coat Grades

All tack coat materials shall meet the Standard Specification requirements and will be either Asphalt Binder, Grade PG 64-22 or Asphalt Emulsion, Grade RS-1H, CRS-1H, CRS-1, HFMS-1 or CRS-2 unless otherwise approved by the Asphalt Design Engineer. **Asphalt Emulsions shall not be diluted with water**. Different grades must not be intermixed in a tanker or distributor since this can cause the material to break in the tank and become almost impossible to spray.

“Non-Tracking” asphalt tack coats may be used at the Contractor’s option based on a new special provision. The Contractor can select from various non-tracking tack coat products from an approved list maintained by the Materials & Tests Unit.

https://connect.ncdot.gov/resources/Materials/MaterialsResources/Approved%20Non-Tracking%20Tack%20Coat%20Products%20for%20NC.pdf

Unless otherwise specified in the Project Special Provisions, the Contractor may select the grade of tack coat material he anticipates using. Any approved grades may be used provided the material is accompanied by a certified delivery ticket in accordance with Article 1020 of the Standard Specifications. The Contractor will advise the Roadway Technician of the actual brand and grade being used and the QA Technician will indicate same on the Asphalt Roadway Technician's Daily Report (M & T Form 605). Should there be any concern about the quality of material, samples should be taken in approved containers and submitted to the M&T Unit for testing.

9.3.2 Application Rates and Temperatures

Target rates of application for different pavement surfaces have been established as shown in Table 605-1.

TABLE 605-1
APPLICATION RATES FOR TACK COAT

Existing Surface	Target Rate (gal/yd^2)
	Emulsified Asphalt
New Asphalt	**0.04** (+/- 0.01)
Oxidized Asphalt or Milled	**0.06** (+/- 0.01)
Concrete	**0.08** (+/- 0.01)

NOTE: The plus or minus 0.01 in the rate is to account for any equipment variability only.

Uniformity of application and proper application rate are the keys to success of the tack coat performance. Between new layers of asphalt, a uniform target rate of 0.04 gal/yd^2 is required. On all resurfacing projects, use a

minimum of 0.06 gal/yd^2 to account for an oxidized asphalt surface. Milled asphalt surfaces need to be properly cleaned and prepared prior to placing tack coat at a uniform target rate of 0.06 gal/yd^2.

Emulsion and asphalt binder tack is considered equivalent from a service viewpoint when applied at the proper rates. The primary advantage of emulsion is that it can be applied at a significantly lower temperature than asphalt binder tack and can normally be applied more uniformly. This lower temperature makes it easier to store and handle and also is much safer to use. However, regardless of the rate grade used, the tack coat material should be heated to the proper temperature so that it is fluid enough to be sprayed from the nozzles instead of coming out in strings. The temperature of the tack coat material at the time of application should be within the ranges in Table 605-2.

TABLE 605-2
APPLICATION TEMPERATURE FOR TACK COAT

Asphalt Material	Temperature Range
Asphalt Binder, Grade PG 64-22	350 - 400°F
Emulsified Asphalt, Grade RS-1H	130 - 160°F
Emulsified Asphalt, Grade CRS-1	130 - 160°F
Emulsified Asphalt, Grade CRS-1H	130 - 160°F
Emulsified Asphalt, Grade HFMS-1	130 - 160°F
Emulsified Asphalt, Grade CRS-2	130 - 160°F

The proper amount of tack coat for any surface is a matter of judgment, and this judgment must be made with the knowledge that too much asphalt could flush into the mix and cause loss of stability or could sometimes cause it to slip, and that too little tack will not properly bond the surfaces. Regardless of the rate selected, if the tack is not applied uniformly over the surface, the tack will not perform satisfactorily.

9.3.3 Application Of Tack Coat

The contractor shall provide a distributor for heating and applying the tack coat in accordance with Article 600-5 of the Standard Specifications and Section 9.1. No more tack coat material may be applied than can be covered with base, intermediate, or surface course material during the next day's operation, except where public traffic is being maintained. Where public traffic is being maintained, no more tack coat may be applied than can be covered during the same day's operation. However, the Resident Engineer may limit the application of tack coat in advance of any paving operation depending on traffic conditions, project location, proximity to business or residential areas, or other reasons. In the event that tack coat material is not covered in the same day's operation, the Resident Engineer may require the application of suitable granular material or other means to provide a safe traffic condition at no additional cost to the Department.

Tack coat must be applied only in the presence of and as directed by the Engineer. No base, intermediate, or surface mixture may be placed until the tack coat has been placed and sufficiently cured. **Tack coat shall be uniformly applied with the spray bar** on a pressure distributor in the presence of, and as directed by, the Resident Engineer or his Technician. In places where the distributor bars cannot reach, it will be necessary to apply the tack coat with a hand spray attached to the distributor by a hose. When hand spray methods are used, care should be taken to give the surface a adequate and uniform application of tack coat. All pavement contact surfaces of headers, curbs, gutters, manholes, core sample holes, vertical faces of old pavement and all exposed transverse and longitudinal edges of each course must be painted or sprayed with tack before any mixture is placed adjacent to such surfaces.

After the tack coat has been applied, it shall be protected from all traffic until it has cured sufficiently. It can be considered sufficiently cured when it is tacky to the touch. If emulsified asphalt is used, adequate time should be allowed for the water to evaporate leaving only the asphalt binder residue. Normally emulsified asphalt is brownish in color when first sprayed but will be black and tacky once the water has evaporated out of it. If a PG 64-22 binder is used for tack, plant mix can normally be placed on it almost immediately. After the tack has cured, it should still be protected as much as possible from all traffic. In the event that a rain or shower falls on the freshly placed tack coat, the Contractor shall at the direction of the Resident Engineer or his Technician place whatever signs, lights, and pilot cars that are necessary to protect the traveling public from the slippery tack coat and shall maintain this protection as long as the hazardous condition prevails.

NOTE: Each layer of asphalt is required to be tacked. The Engineer shall not waive the tack coat between two layers placed on the same day. This is to prevent pavement layer slippage.

9.3.4 Determination Of Tack Coat Rate

In July 2012, a new NCDOT special provision for "Application Rates and Temperatures" specifies the rates for different surfaces as shown in Table 605-1. DOT Technicians should check tack coat placement and insure the surface is clean, verify uniform coverage across the mat, and inform the Contractor that the tack must be allowed to "break" prior to placing trucks on tack or beginning the paving operation. The DOT Technician should also periodically check that the distributor truck equipment is in proper working order such as spray nozzles and nozzle angle settings, spray bar height, computerized application rate gauge in the truck, flowmeter gauge to measure gallons, etc. Also, check the temperature gauge on outside of truck for proper application temperature of the tack coat.

The tack coat rate must be regularly checked by the DOT Technician to determine that the specified amount is being placed. The rate of application may be obtained at intervals by using the total gallons applied divided by the square yards upon which the tack coat was placed. At the end of each operation, a Technician must compute the actual rate of tack coat applied and record this on his daily report (M&T 605 form). The rate of application should be calculated separately for each individual application or "shot". An example of a tack coat rate calculation is shown on the following page.

Example Calculation of Tack Coat Rate

275 gallons of CRS-1 was applied 12 feet wide from Sta. 12+00 to 45+00 at a directed rate of 0.06 gals/yd^2.
What is the actual tack coat rate of application in gallons per square yard?

$$\boxed{Rate\ of\ Application = \frac{(No.\ of\ Gallons\ Applied)}{(No.\ of\ Square\ Yards\ Tacked)} = \frac{Gallons}{Square\ Yards}}$$

For a Rectangular Area: $Length = Ending\ Station - Beginning\ Station = (45 + 00) - (12 + 00) = 3300\ LF$

$$Rate\ of\ Application = \left[\frac{(No.\ of\ Gallons\ Applied)}{\left(\frac{Length\ (ft.) \times Width\ (ft.)}{9\ ft^2/yd^2}\right)}\right] = \left[\frac{275\ gals.}{\left(\frac{3300\ ft.\ \times\ 12\ ft.}{9\ ft^2/yd^2}\right)}\right] = 0.063\ gals/yd^2$$

Say: 0.06 gals/yd^2

(Note: Significant Decimal for Prime Coat Rate is 0.01)

9.4 ASPHALT MIX PLACEMENT AND COMPACTION OPERATIONS

9.4.1 General

Placing and compacting the asphalt mixture is the operation to which all the other processes are directed. Aggregates have been selected and combined; the mix designed; the plant and its auxiliary equipment set up, calibrated and inspected; and the materials mixed together and delivered to the paver.

Asphalt mix is delivered to the paving site in trucks and may be deposited directly into the paver, or in windrows in front of the paver, or transferred to the paver by specially designed materials transfer equipment. The paver then spreads the mix to the required grades, cross-section thickness, and widths shown on the plans and typical sections as it moves forward. In doing so, the paver partially compacts the material and provides a smooth, uniform texture. Immediately thereafter and while the mix is still hot, steel-wheeled, vibratory or rubber-tired rollers or some combination of these are driven over the freshly paved mat, further compacting the mix to the required density and texture. Rolling is usually continued until the pavement is compacted to the required density, or the temperature has dropped to a point where further compaction may produce detrimental results. After the pavement course has been compacted and allowed to cool, it is ready for additional paving courses or ready to support traffic loads.

9.4.2 Planning Paving Operations

Paving operations require careful planning, preparation, co-ordination, and communication between all parties. The surface to be paved must be properly prepared. Enough vehicles and equipment must be available and in good operation to provide a steady flow of materials and progress without delays. Plant production must be closely coordinated with the paving operation, and the compaction of freshly placed mixture must be prompt and adequate.

Nowhere in the construction of asphalt pavements are the efforts and skills of workers, operators, and technicians more apparent than in the placing and compacting of the mix on the roadway. Having the necessary knowledge and skills of the paving operation and having pride in the final product can mean the difference between a durable, smooth-riding pavement and a rough, unsound, unsightly pavement that will not perform as was intended, but also, is a nuisance to drive on.

Recent national surveys of the traveling public (taxpayers) indicate that their perceptions of high quality pavements are those which are smooth and last for a long time. While the public is usually neither aware nor concerned about other properties such as gradation, binder content, voids properties, density, etc., we as Engineers and Contractors know that mix quality, smoothness, and density are significantly related. Smoothness is an indicator of a pavement that has uniform and consistent mix properties without segregation during placement. Achieving uniform density at the proper level during placement and compaction results in a pavement which will have more rut resistance, less permeability, less oxidation, less fatigue cracking, be more durable, require less maintenance and therefore, last longer. The key is communication and consistency. To meet these objectives requires substantial planning on the part of all parties involved.

Because planning and communication are so essential for successful paving operations, a pre-paving construction conference should be held before work begins. Such a conference allows the Department's Project Engineer, the Contractor's Paving Superintendent, Traffic Control personnel, Trucking personnel, Roadway and Density Technicians, and others directly involved with the operation the opportunity to discuss topics such as the following and to plan the paving operation accordingly:

1. **SAFETY**
2. Continuity and sequence of operations
3. Number of pavers to be used on the project
4. Number and types of rollers needed
5. Number of trucks required
6. The chain of command for communication
7. Traffic Control
8. Weather and temperature requirements/restrictions
9. Intermingling of mixes from different sources
10. Use of automatic screed controls (Profile & Slope)
11. Method of density control, smoothness control, etc.
12. Construction of control strips
13. Drainage and Utility Adjustments
14. Overruns/underruns
15. QC/QA Checklist
16. MTV Required

The <u>pre-paving construction conference is the time for questions to be answered, problems to be solved in advance of construction, and channels of communication and command to be established</u>. It is a time to establish relationships with everyone involved in the project so that confusion and friction can be avoided once paving operations begin. As many questions and issues as possible should be resolved prior to beginning paving operations. In most circumstances, this will be reflected in a higher quality finished product.

9.4.3 Weather, Temperature and Seasonal Limitations

Article 610-4 of the Standard Specifications addresses air temperatures, road surface temperatures, seasonal limitations, weather requirements, the layer being placed, and layer thickness that apply when producing and/or placing the various mixture types.

Asphalt mixtures shall not be produced or placed during rainy weather, when the subgrade or base course is frozen, nor when the moisture on the surface to be paved would prevent proper bond. Do not place asphalt material when the air or surface temperatures, measured at the location of the paving operation away from artificial heat, do not meet Table 610-5.

TABLE 610-5 PLACEMENT TEMPERATURES FOR ASPHALT	
Asphalt Concrete Mix Type	**Minimum Surface and Air Temperature**
B25.0B, C	35°F
I19.0B, C, D	35°F
S4.75A, SF9.5A, S9.5B	40°F[A]
S9.5C, S12.5C	45°F[A]
S9.5D, S12.5D	50°F

A. For the final layer of surface mixes containing recycled asphalt shingles (RAS), the minimum surface and air temperature shall be 50°F.

In addition, surface course material which is to be the final layer of pavement shall not be placed between December 15 and March 16, except that OGAFC will not be placed between October 31 and April 1 of the next year, unless otherwise approved by the Engineer. As an exception to this, when in any day's operations, the placement of a layer of asphalt base course material or intermediate course material 2" or greater in thickness has started, it may continue until the temperature drops to 32°F.

No plant mix base course or intermediate course shall be placed that will not be covered with surface course during the same calendar year or within 15 days of placement if the plant mix is placed in January or February. Failure of the Contractor to cover the plant mix as required above will result in the Engineer notifying the Contractor in writing to cover the plant mix with a sand seal. The sand seal shall be applied in accordance with the requirements of Section 660 of the Standard Specifications, except that Articles 660-3 and 660-11 will not apply. This work shall be performed by the Contractor at no cost to the Department. In the event the Contractor fails to apply the sand seal within 72 hours of receipt of such notice, the Engineer may proceed to have such work performed with Department forces and equipment. The cost of such work performed by Department forces will be deducted from payments due or to become due to the Contractor.

Meeting the requirements of the weather and temperature limitations does not preclude the enforcement of compaction and surface requirements of the Specifications. If the required density, surface tolerances and/or an acceptable surface finish cannot be achieved, the Contractor must be so advised and paving operations should cease until these requirements can be met. See Section 10 for limited production procedures for these problems.

Asphalt mixtures shall not be produced or placed during rainy weather. In no event should mixture be placed in standing water or when the moisture on the surface to be paved would prevent proper bond. In the event unpredictable rain begins after paving operations have started, the plant production should immediately cease. If the Contractor requests and, the Engineer grants approval, he may be allowed to place any mixture which is in transit at his own risk. This material will be subject to removal if problems are encountered, including but not limited to poor bond, low density or unsatisfactory laydown.

9.5 SPREADING AND FINISHING OF ASPHALT PAVEMENTS

9.5.1 Equipment

Most asphalt plant mixtures are placed by asphalt pavers and compacted by either steel-wheeled static or vibratory rollers, pneumatic-tired rollers, or some combination of these. This is the basic paving equipment. Other equipment used in connection with the paving operation may include: milling equipment, the asphalt distributor, haul trucks, materials transfer devices, motor grader, wind-rowing equipment, hand tools, and other machinery and implements. Specification requirements for hauling, placing, and compaction equipment are included in Division 6 of the Standard Specifications and in Sections 8 and 9.

The Contractor must furnish and utilize equipment, which meets the requirements of the Specifications, unless otherwise approved by the Engineer. Prior to beginning paving operations, the Resident Engineer or the Roadway Technician must inspect the Contractor's spreading and finishing equipment to see that it meets all requirements of the Specifications and is in good working order. If the equipment meets Specifications and is in satisfactory operating condition a statement shall be entered in the Technician's Daily Diary. If not, the Contractor should be advised accordingly and shall take corrective actions before paving begins. See the Technician's Checklist for QC/QA Roadway Operations in Section 10.1 and the following information.

(A) Incidental Tools

Adequate hand tools and proper equipment for cleaning and heating them should be available for the paving operation. Incidental tools to be furnished by the Contractor include:

1. Rakes
2. Shovels
3. Lutes;
4. Tool heating torch;
5. Cleaning equipment;
6. Hand tampers;
7. Small mechanical vibrating compactors;
8. Blocks and shims for supporting the screed of the paver when beginning operations;
9. Heavy paper, or timbers for construction of joints at ends of runs;
10. Joint cutting and tacking tools
11. 10 foot straightedge (see Article 610-12 of Standard Specifications)
12. 6" (150mm) Core Drill with 6" (150mm) Internal Diameter of Cut Core Bits
13. 4 Foot Level
14. Depth Checking Device
15. Infrared Thermometer
16. Stringline for paver alignment
17. North Carolina Hearne Straightedge (when required by contract)

(B) Asphalt Distributor

An asphalt distributor is required to apply tack coat material before paving operations begin. Details on requirements and use of the distributor are covered in Article 600-5 of the Standard Specifications and Section 9.1.

(C) Haul Trucks

Asphalt mix is delivered to the jobsite by trucks. The specifications state the requirements for hauling vehicles. The technician must be certain that the mixture being delivered is within specifications and that it is being delivered in a manner that is safe.

Trucks are required to have tight, clean, smooth beds and free of holes. All trucks must meet minimum safety criteria. Each truck must be clearly numbered for easy identification and must be equipped with a tarp. Tarps shall be of a solid waterproof construction such as canvas, vinyl or other suitable material. A 3/8 – 5/8 inch diameter hole must be located on each side for the purpose of inserting a thermometer to check the mix temperature.

Before being loaded, the truck bed must be cleaned of foreign material and hardened asphalt and then lightly coated with an approved truck release agent that aids in preventing fresh asphalt mix from sticking to the surfaces of the bed. **Diesel Fuel, Kerosene, and Fuel Oil are strictly prohibited.** Onboard systems that allow fuel from the truck tank to be diverted and sprayed onto the truck bed are NOT allowed for this purpose. After the bed is coated, any excess release agent must be drained from the bed.

For a current list of approved release agents, contact the Materials and Tests Unit at phone number (919) 329-4060 or visit their approved products web site located at:

https://apps.dot.state.nc.us/vendor/approvedproducts/

Before loading, the truck must also be weighed to establish a tare weight (unloaded weight). The tare weight is later subtracted from the loaded weight of the truck to determine the weight of mix the truck is hauling. See weigh ticket requirements in Section 6.8.

The number of trucks required on the project is determined by many factors: the mix production rate at the plant, the length of the haul, the type of traffic encountered, and the expected time needed for unloading. The truck must be inspected to be certain the rear of the bed overhangs the rear wheels enough to discharge mix into the paver hopper. If it does not, an apron with side plates must be added to the truck body to increase the overhang and prevent spillage of mix in front of the paver.

The bed must also be of a size that will fit into the hopper without pressing down on the paver. The hydraulic system for the truck bed hoist should be frequently inspected to guard against hydraulic fluid leakage. Such leakage on the roadway surface will prevent good bonding between the roadway and the new mat. If enough oil or fuel is spilled that the mix can absorb it, the mix can become unstable at the spot. As a result, leaking trucks must not be used.

Cover each load of mixture with a solid, waterproof tarp constructed of canvas, vinyl, or other suitable material. Securely fasten each tarp to prevent the entrance of moisture and the rapid loss of temperature. A cool mix forms lumps

and a crust over its surface. A mix with excessive moisture in it will probably blister and not lay smoothly, as it will pull and tear.

During the haul operation, the Contractor should take necessary precautions to limit the tracking and/or accumulation of tack coat material on either existing or newly constructed pavements. Trucks should minimize their distance traveled over freshly tacked pavement and avoid tack that has not broken.

During delivery, the driver must direct the truck squarely against the paver, and should stop the truck a few inches from the paver, before the truck tires make contact with the paver push roller bar. Backing the truck against the paver can force the screed back into the mat leaving a bump in the pavement even after the mat is rolled.

The truck bed should be partially raised and the load allowed to "break" before the tailgate is opened to prevent the mix from dribbling from the load into the paver hopper. This technique will help to minimize segregation that occurs between loads.

(D) The Asphalt Paver

Use a self-contained, power propelled paver capable of spreading and finishing the asphalt mixture to the required grades, cross sections, thickness, and widths shown on the plans and typical sections and to uniform density and texture. The asphalt paver spreads the mixture in a uniform layer of desired thickness, shape, elevation and cross section, ready for compaction. Modern pavers are supported on crawler tracks or wheels. These machines can place a layer of less than 1 in. to around 8 in. in thickness over a width of 6 to 32 ft. Working speeds generally range from 10 to 70 ft. per minute. The basic asphalt paver consists essentially of a tractor unit and a screed unit. The paver used in highway construction is a relatively large machine with many intricate parts and adjustments. Most pavers in use today may differ in detail, but they are all similar in principle and operate based on the principle of the self-leveling, floating screed.

The plan and side views shown in Figure 9-3 trace the flow of asphalt mix from the receiving hopper at the front of the paver to the finished pavement behind the screed unit at the rear of the machine. The mix is dumped into the receiving hopper at the front of the machine from a truck that is pushed ahead by the paver. Rollers mounted on the front of the paver contact the rear tires of the truck and allow the paver to push the truck while it is dumping into the hopper.

After receiving the material in the hopper, two independently controlled slat conveyors, sometimes called flights, carry the mix back through the control gates to the spreading screws (augers). Each auger and its respective conveyor are automatically controlled to allow the mix to be uniformly distributed and maintained in front of the screed unit.

The screed unit is attached to the tractor unit by two long pull arms that pivot well forward on the paver. The arms provide no vertical support for the screed when it is in operating position. As the tractor pulls the screed into the material, the screed will seek the level where the path of its bottom surface is parallel to the direction of pull of the tow point.

An often overlooked but important item is the proper cleanup of the paving machine at the end of the working day. While the machine is still warm, the hopper, feeders, spreading screws, tamper bars, and screed plates should be given a light spray of release agent to ensure a smooth start the next day.

1. The Tractor Unit

The tractor unit provides the motive power through crawlers or pneumatic tires traveling on the road base. It includes the propulsion system, push rollers, paver hopper, slat conveyors, flow gates, spreading screws (augers), materials feed systems, and controls. Most pavers are equipped with dual controls so that the operator can sit on either side while he operates the paver.

It is impractical to describe in detail all tractor units in current use. There are several features, however, which are generally common to all and should be checked at the beginning of the paving operation and examined periodically thereafter. Most points that should be checked involve moving or working parts. For more detailed information, service manuals provided by the manufacturer should be carefully studied.

The governor on the engine should be checked for proper operation. It is important that the tractor unit provide a smooth steady pull on the screed arms. If the paver is equipped with pneumatic tires, air pressure should be as recommended. On crawler machines, crawlers should be snug but not tight. Any unnecessary movement caused by low tire pressure or loose crawlers when the machine starts or stops will be reflected in the surface of the mat as the screed is pulled forward.

The specifications require that the paver be equipped with a receiving hopper and an automatically controlled distribution system capable of uniformly maintaining a proper head of material in front of the full length of the screed, including screed extensions, be utilized. In the bottom of the paver hopper are two slat conveyers. These conveyors are used to carry the asphalt mix from the hopper through the tunnel on the paver

and back to the augers. The slat conveyor and auger on one side of the paver operates independently from the movement of the slat conveyor and auger on the other side of the machine. However, the auger and slat conveyor on each side of the paver are interlocked such that they operate simultaneously. Thus, the amount of mix that can be carried back through the paver on one side can be varied from the amount of material that is being delivered on the other side. This capability allows the automatic controls or the paver operator to manually feed more or less material to one side of the paver or the other for various reasons, including paving ramps, mail box turnouts, tapers, variable widths, and variable depth areas.

Flow control gates at the back end of the hopper over each of the slat conveyors can be individually adjusted to control the material flow rate to the augers. These gates regulate the amount of material that can be delivered by the conveyors to the augers.

Sensors mounted on the paver near the outer end of the augers detect the amount of material being carried in front of the screed and activate the automatic controls when material is needed. The automatic controls actuate the augers and the slat conveyors to keep a constant depth of material in front of the screed, including screed extensions. The feed system should be adjusted so as to cause the conveyors and augers to operate as close to 100% of the time as possible (**at least 85% of the time**) with a **uniform** head of material at a level at or just above the center of the auger shaft in front of the screed at all times. Some newer pavers are equipped with systems which allow the augers to run 100 percent of the time.

On some newer pavers, the slat conveyor system has been replaced by a screw conveyor system. The purpose of this new system is to provide remixing of the mixture in the paver hopper to reduce both temperature and aggregate segregation in the mat behind the screed.

The mix deposited in the auger chamber from the slat conveyors is distributed across the width of the paver screed by the movement of the augers. At the junction of the two augers in the center of the paver, adjacent to the auger gear box, there typically is a different shaped auger (reverse auger or paddle) to tuck mix under the gear box and assure that mix placement at this location is the same as that across the rest of the width of the mat being laid. If the reverse auger paddles are not operating properly or are in poor condition, a coarse segregated streak of material will most likely show up in the middle of the mat. It is important that the augers carry a consistent amount of mix across the front of the screed so that the pressure (head of material) on the screed is kept as constant as possible. Auger extensions shall be used to provide a proper head of mix in front of the full screed length. When the screed is extended by more than one foot, the auger on that side of the paver shall be extended by an equivalent amount.

Figure 9-3
The Tractor Unit

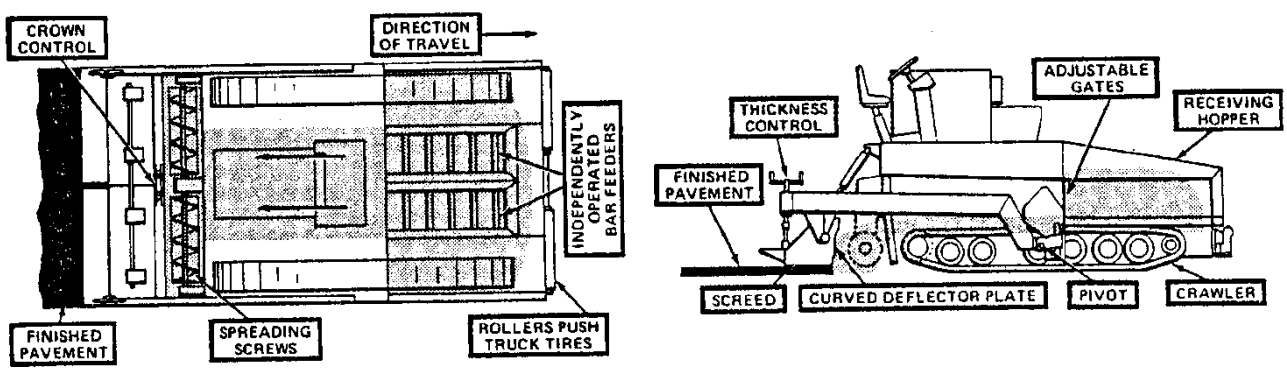

2. The Screed Unit

The paver screed is a free floating unit that strikes off, partially compacts, and irons the surface of the mat as it is pulled forward by the tractor unit. The screed is attached to the tractor unit at only one point on each side of the paver called the pull point or tow point. This allows the screed to "float", dependent upon the forces acting on the screed as it is being pulled forward into the mix by the tractor unit. The basic principle of the free floating screed is employed on all modern asphalt pavers in use today. For specific details on a particular brand or model paver, service manuals and literature by the manufacturer should be studied in detail. See Figure 9-4 for illustration of various components of the screed unit.

Equip and operate the paver with a fully activated screed plate that is designed to be preheated for the full width whenever necessary. The fully activated screed must have operational vibrators and heat source. The vibrators cause the mixture to feed more uniformly under the screed and also impart some initial compaction to the mat. This results in a more uniform mat thickness, increased density, improved smoothness and better surface texture. This initial compaction also helps to minimize the amount the screed settles when the paver is stopped for various reasons. Vibration may be accomplished with electrically operated mechanical vibrators or eccentrically loaded turning shafts which produce vibration. The frequency of vibration may be controlled, thus helping to obtain a maximum compacting and smoothing effect. The optimum frequency and amplitude for best results in surface texture, smoothness and density is a trial and error process; however, vibrators must be used at all times on all layers of mixture.

Both the leading and trailing edges of the screed have a crown adjustment. The leading edge (front) should always have slightly more crown (normally about 1/8 inch) than the trailing edge (rear) to provide a smooth flow of material under the screed. Too much lead crown, however, creates an open texture along the edges of the mat while too little lead crown may create an open texture along the center of the mat. Optimum crown adjustment also is a matter of trial and error. Crown adjustments to the leading edge or trailing edge of the screed may be made independently or simultaneously during the paving operation. The objective is to achieve a smooth, uniform texture across the entire width of the mat.

The screed must be equipped with heaters to prevent the mix from sticking to the screed plate. They must always be used to pre-heat the screed to nearly the same temperature as the asphalt material passing under it at the start of paving operations. Sometimes they are needed when paving during cool, windy days. However, they should never be used to attempt to heat cool mixture being delivered to the paver. Pre-heating helps to minimize the pulling and tearing that usually occurs on start-up.

Before paving begins, the screed should be raised and the bottom surface carefully checked for smoothness, holes, and/or excessive wear. Screed plates first wear out about 4 to 6 inches in from the trailing edge. Extensions should be flush with and in the same true plane as the bottom surface. Tampers should be checked for excessive wear, adjustment, and proper operation. Excessive wear causes a pitted surface in the mat, and improper adjustment gives the mat a scuffed appearance. The limit of the bottom stroke of the tamper bar should extend 1/64 in. below the bottom of the screed plate (the thickness of a fingernail). If the screed is of the vibrating type, the vibrators should be started with the screed in a raised position to see that adequate vibration is being achieved. Their performance must also be checked during the paving operation. **Either the tamper bars or the vibrators, depending on the screed type, must be utilized at all times on all courses during the laydown operation**.

While the screed is raised, the strike-off device in front of the screed should be checked for condition and adjustment in accordance with manufacturer's recommendations. An uneven, damaged, worn or improperly adjusted strike-off can greatly affect the smoothness, texture and uniformity of the mat.

Figure 9-4
The Screed Unit

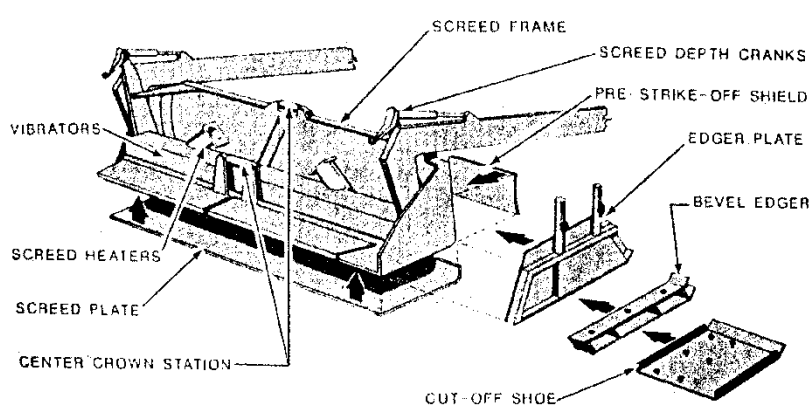

Pavers must be equipped with a screed control system which will automatically control the longitudinal profile and cross slope of the pavement through the use of either a mobile grade reference(s), including mechanical, sonic and laser grade sensing and averaging devices, an erected string line(s) when specified, joint matching shoe(s), slope control devices or other methods or combination of methods approved by the Engineer.

An erected fixed stringline must be used when required by the contract; otherwise, a mobile grade reference system capable of averaging the existing grade or pavement profile over a minimum 30 foot distance or by a non-contacting laser or sonar type ski with at least four referencing stations mounted on the paver at a minimum length of 24 feet shall be used. Position the system such that the grade sensor is at the approximate midpoint of the grade reference system. The transverse cross-slope shall be controlled as directed by the Engineer.

A spirit level mounted on the screed or on a wedge board should be available so that a check on the roadway crown can be made at any time. The heating unit should also be checked for proper operation by lighting the burner and allowing it to burn a few minutes prior to beginning paving operations.

(E) Material Transfer Vehicle

A Material Transfer Vehicle (MTV) is basically a surge bin on wheels which transfers and remixes the mixture from the haul vehicle to the paver hopper at a uniform and continuous rate so as to allow continuous movement of the paver between truck exchanges, provided a continuous supply of material is received from the plant. This allows the paver to operate almost continuously, without stopping between truck exchanges. The purpose of the MTV is to remix the mixture prior to discharge into the paver conveyor system to minimize aggregate segregation and temperature variation that may have occurred during mix production, loading from silos, and cooling during hauling.

The proper use of an MTV significantly improves the uniformity and ride quality of any pavement and is highly encouraged by the Department. Article 610-8 specifically requires the use of a Material Transfer Vehicle (MTV) when placing all asphalt concrete plant mix pavements which require the use of asphalt binder grade PG 76-22 and for all types of OGAFC, unless otherwise approved. Use an MTV for all surface mix regardless of binder grade placed on Interstate and US Routes that have 4 or more lanes and are median divided. Where required above, utilize the MTV when placing all full width travel lanes and collector lanes. Use MTV for all ramps, loops, -Y- line travel lanes, full width acceleration and deceleration lanes, and full width turn lanes that are greater than 1,000 ft. in length.

One of the key factors in achieving smooth pavements is to maintain a uniform head of material in front of the screed without stopping the paver. Keeping a constant stream of trucks supplying mix to the MTV is necessary if a continuous paving operation is to be achieved. However, if a gap does occur, the MTV should be stopped without being completely emptied when waiting for trucks, so that a consistent minimum amount of mix is retained on the augers to mix with the new, possibly segregated, material delivered from the next haul truck. In addition, the paver should be stopped with the hopper half full so that the amount of mix in front of the paver screed remains constant and the proper smoothness of the mat can be achieved.

The specifications require that an MTV transfers to the paver a uniform, non-segregated mixture that is of uniform temperature. There shall be no more than 20°F difference between the highest and lowest temperatures when measured transversely across the width of the mat in a straight line at a distance of one foot to three feet from the screed while the paver is operating. The temperature measurements are taken approximately one foot from each edge and at least once in the middle of the mat.

Some MTVs are very heavy. Empty the MTV when crossing a bridge and move across without any other Contractor vehicles or equipment being on the bridge. Move the MTV across a bridge in a travel lane and not on the shoulder. While crossing a bridge move the MTV at a speed no greater than five miles per hour without any abrupt acceleration or deceleration.

In the event the MTV malfunctions during paving operations, immediately discontinue plant operations and do not resume operations until the MTV malfunctions have been remedied, unless otherwise directed by the Engineer due to safety concerns. The Contractor may continue placement of the mix until any additional mix in transit has been placed, provided satisfactory results are achieved. This procedure in no way alleviates the Contractor from meeting contract requirements.

9.5.2 Coordinating Plant Production And Paver Speed

Operate pavers at a forward speed consistent with plant production, material delivery, and satisfactory laying of the mixture so as to ensure a uniform and continuous laydown operation. Coordinate and adjust the paving operation and loading operation so as to maintain an adequate amount of asphalt mixture in the paver hopper between truck exchanges. Do not allow the paver hopper to become empty between loads. Should unevenness of texture, tearing, segregation, or shoving occur during the paving operation due to unsatisfactory methods or equipment, immediately take such action as may be necessary to correct such unsatisfactory work. Excessively throwing back material will not be permitted.

Uniformity of operations is essential in asphalt paving. Uniform, continuous operation and forward speed of the paver produces the highest quality pavement. A smooth pavement with uniform density and surface texture is the ultimate goal.

There is no advantage in the paver traveling at a speed that allows the mix to be placed faster than the plant can produce mix and/or the mix can be delivered to the roadway. Paving too fast can result in the paver having to stop frequently to wait for trucks to bring more mix. If the wait is too long (more than a few minutes on a cool day) the smoothness and surface texture of the pavement will suffer. In manual operation, when the paver starts up again, the mix in the paver that has cooled causes the screed to rise and then fall as warmer mix feeds through the paver and the screed seeks the equilibrium level. If automatic screed controls are being used, the automatic system overcorrects the screed, causing it to dip before finally leveling off, and thereby causing a rough riding surface in the pavement. In addition, these areas are usually different in surface texture (open), many times the mix is segregated, and density is almost always lower, if not failing. These areas can become A POTHOLE WAITING TO HAPPEN. Obviously, then, it is essential that plant production and paving operations be coordinated. The paver must be continuously supplied with enough mix, and at the same time, the trucks should not have to wait a long time to discharge their loads into the paver hopper.

The paving machine should never be operated at a speed in excess of that which will result in a properly placed mixture. If the paver cannot properly place the mixture at a rate equal to plant capacity, the plant production rate will need to be slowed, or other corrective measures taken. A chart similar to the one shown in Figure 9-5 may be helpful in balancing paving machine speeds with plant production. However, it doesn't take a rocket scientist to realize that if the paver is waiting for extended periods between every load, then the paver needs to be slowed down.

Figure 9-5
Paving Machine Speeds Required to Handle Plant Production

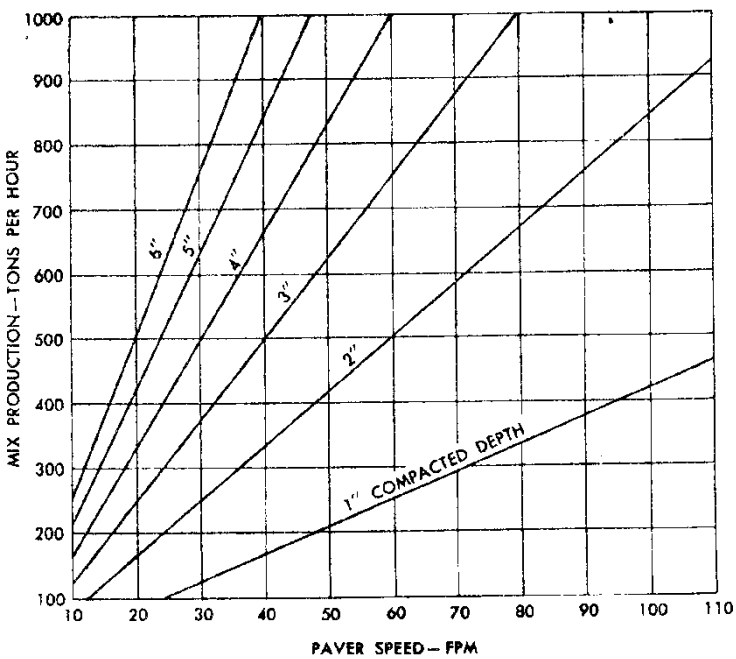

NOTE: Paver speed based on spread 12-ft. wide and a compacted density of 140 lb. per cu. ft.

9.6 THE PLACING OPERATION

Construct pavements using quality paving practices as detailed herein. Construct the pavement surface smooth and true to the plan grade and cross slope. Immediately correct any defective areas with satisfactory material compacted to conform with the surrounding area. Pavement imperfections resulting from unsatisfactory workmanship such as segregation, improper longitudinal joint placement or alignment, non-uniform edge alignment and excessive pavement repairs will be considered unsatisfactory and if allowed to remain in place will be accepted in accordance with Article 105-3. When directed due to unsatisfactory laydown or workmanship, operate under the limited production procedures. (see Section 10.2)

Prior to beginning operations a string line must be placed by the Contractor along the edge of the proposed pavement to provide horizontal alignment control for the paver operator. The objective is to ensure a true and uniform line for the pavement edge(s). A string line will not be required when the first course is placed adjacent to a curb section. The Contractor and the Technician must frequently check the stringline to assure that it is correctly located and of uniform alignment and is being followed.

Apply tack coat in accordance with the provisions of Section 605 of the Specifications and Section 9.3. The Specifications state that mixtures produced simultaneously from different plant sources cannot be intermingled by hauling to the same paver on the roadway unless the mixtures are being produced from the same material sources and same mix design.

The Specifications require that the paver be operated as continuously as possible. Pave intersections, auxiliary lanes, and other irregular areas after the main line roadway has been paved, unless otherwise approved.

Some contracts require the use of an erected fixed stringline for both and longitudinal profile and cross slope control. When an erected fixed string line is required, the Contractor must furnish and erect the necessary guide line for the equipment. Support the stringline with grade stakes placed at maximum intervals of 25 feet for the finished pavement grade.

9.6.1 The Spreading Operation

After the paver has been checked and has been positioned on the road, the screed should be lowered onto "**starting blocks**" (shims) of the same thickness as the loose mat to be laid and the thickness control screws adjusted for this depth. Or, if starting from a previously laid mat, "starting blocks" of the same thickness as the difference between the loose and compacted mats should be used. A general rule of thumb is to increase the loose thickness by 1/4 inch per inch of compacted thickness. The thickness control screws on the screed are then adjusted for this depth. When this is done, the paver will then begin spreading the loose material at a depth such that after compaction, the desired depth of mat will be achieved. It is desirable that the starting blocks (shims) be as long, or longer than the distance from the front edge to the rear edge of the screed plate. This gives the screed plate full bearing at each end on a surface, which is close to parallel with the grade, upon which the screed can be nulled out.

As soon as the first load of asphalt mix has been spread, the texture of the unrolled surface should be checked to determine its uniformity. Adjustment of the screed, tamping bars or vibrators, spreading screws, hopper feed, and other adjustment points should be checked frequently to assure uniform spreading of the mix to proper line and grade. A straightedge should be used to determine whether or not a smooth surface is being obtained.

When the truck is dumping its load into the hopper, the wheels should firmly contact the truck push rollers of the paver. This is done automatically on many pavers, with oscillating push rollers that permit some misalignment of the truck. When the truck is skewed, the oscillating push rollers automatically adapt to that condition and the truck load is concentrated at the center of the paver. If the paver is not equipped with oscillating push rollers and a truck is skewed so that the rollers are pushing against one set of dual wheels only, the spreader tends to skew also. In this case, continual correction is required by the operator, resulting in a ragged line with consequent irregular and poorly compacted joints. In addition, the rollers must be clean and free to rotate to allow smooth forward travel of the paver.

The sides, or wings, of the hopper are movable. Mix, if left to stand for a long period of time in the corners of the hopper, will cool and may appear as chunks of mix back of the screed when it passes through the paver. Thus, the mix is periodically moved from the sides of the hopper into the middle of the hopper by folding the wings (sides) and allowing the mix to be deposited into the area of the slat conveyors.

Many paver operators dump (fold) the wings of the paver after each truckload of mix has been emptied into the hopper. Further, to prevent spillage of the mix out the front of the hopper, the operator often pulls the amount of mix left in the hopper down during discharge and after the truck has left the hopper by continuing to run the slat conveyors to feed mix back to the augers. This may result in the slat conveyor running completely empty. This practice can lead to increased mat problems if segregated mix is deposited on the conveyor slats, either from the paver wings or from the haul truck, and carried back to the augers and screed. It is not good practice to dump the paver wings after each truckload of mix has been delivered or to deposit the mix held in the wings into an empty paver hopper, because either procedure can cause segregation and decrease the quality of the finished mat.

Take necessary precautions during production, loading of trucks, transportation, truck exchanges with paver, folding of the paver hopper wings, and conveying material in front of the screed to prevent segregation of the asphalt mixtures.

To minimize segregation, the paver operator should fold the wings as seldom as possible. The frequency at which the wings are dumped depends on the rate of delivery of the mix to the paver, the temperature of the mix, and the environmental conditions. The wings should be emptied before the mix that collects in the corners of the hopper cools so much that chunks are formed that cannot be broken up as that mix moves through the paver to the augers and under the

screed. On colder days, the hopper wings will need to be dumped more frequently than on warmer days. In some cases, it may be better to allow the mix to remain on the wings until the end of the day and then remove and discard the cool, hardened mix.

When the hopper wings are folded, the paver hopper should be at least partially full. The amount of mix in the hopper should be approximately at the level of the bottom of the flow gates at the back of the hopper. This will provide enough mix to heat the cooler material in the wings before it goes through the screed. The slat conveyors should not be visible at the time that the wings are raised. As discussed later, keeping the hopper relatively full between truckloads of mix keeps the head of asphalt mix in front of the paver screed constant and also reduces any segregation that might be present in the mix. In addition, the wings should not be "banged" repeatedly as they are emptied.

Segregation of the mix must not occur. **If segregation does occur, the spreading operation shall be stopped immediately and not resumed until the cause is determined and corrected**. See **"Segregation of Mixes on the Roadway"** later in Section 10.1.

The amount of material carried ahead of the screed should be kept uniform in height. Variation may result in surface roughness. If the mix pulls and tears under the screed, the condition should be investigated immediately. Common causes of pulling are moisture in the mix, too cold a mix and too high a percentage of screenings in the fine aggregate. For example, when the fine aggregate portion of the mix is composed of stone screenings and sand, an excessively high proportion of screenings may toughen the mix unduly. A tough mix is very desirable for stability but sometimes pulls badly. Even a slight change in the fine aggregate sometimes makes an appreciable difference in placing and rolling characteristics.

Some pavements may develop extreme crowns (either steep or flat) after many overlays have been placed. When not restricted by existing curbs, leveling wedges may be placed on both sides of the crown. The mix should contain small-size aggregates and be feathered near the center or edge of the existing crown.

Many paving operations consist of variable widths not common to multiples of the normal paver width. Cutoff shoes or screed extensions may be used to vary the paver width. In multiple lane paving, the cutoff shoe should always be opposite the joint matching side of the paver. The final lane should be at least the width of the paver. When adding extensions, it is important that they match the screed on the paver, i.e., tamping, vibrating, or oscillating.

Urban paving poses additional problems. Intersections require changes in the crown to facilitate rainfall runoff. This is achieved by reducing crown in the leading and trailing edges of the screed equally. Manholes and drop inlets require handwork on base courses. The screed is lifted over the structure and relocated on the opposite side. Then the area around the structure is filled in by hand. When the surface course is placed, the screed should ride across the structure and the excess material removed.

When placing base courses next to the curb it is advisable to operate the paver 3 to 4 in. away from the curb. This prevents the screed from becoming jammed or bound by the curb. Material is allowed to feed out of the spreading screw chamber by raising the end plate and spreading by hand. The loose hand finished material must be slightly higher than that placed by the screed to compensate for the lack of compaction by the screed.

After one or two truckloads have been spread, both the Department's Technician and the Contractor's Technician should check the unrolled depth and rate of spread of the mix. The unrolled depth is determined with a ruler. To determine the rate of spread, they must determine the area covered and the weight of material spread over that area. The specifications usually require that the mix be placed at a specified rate in pounds per square yard at an approximate depth. By dividing the weight in pounds of mix placed by the number of square yards covered will give the average rate in pounds per square yard being placed.

Once the proper adjustments are made on the screed control system such that the required rate of mix is being placed, an occasional check of the pounds per square yard being placed and an occasional check on the depth of the unrolled mix will be sufficient to determine if the correct spread is being maintained.

If the specifications require that the mix be placed at a specified depth in inches (millimeters), the compacted depth of the mix should also be checked so that a correlation ratio can be established between the loose depth and compacted depth.

Note: See "Determination of Rate of Spread and Tonnage Required" in Section 10.1.

9.6.2 Fundamentals of Screed Operation

The screed unit, exclusive of any type of automatic control, is attached to the tractor unit by two tow arms that pivot about a hinge point (tow point) just beyond the midpoint of the paver. In manual operation, these tow arms are locked in a fixed position at the tow point. The basic principle of screed operation is that when pulled into the material deposited in front of it by the spreading screws (augers), it floats on the mix, moving up or down seeking the level where the forces acting on the screed are in equilibrium and the path of its flat bottom surface is approximately parallel to the direction of pull.

Forces acting on the screed unit during paving operations are shown in Figure 9-6. While the paver is moving, the pull, (P), at the pivot point always exceeds the horizontal resistance, (H), on the screed plate. When the thickness of the mat is to be increased, the screed is tilted upward to allow more material to crowd under it. The result is that the vertical uplift, (V), exceeds the weight, (W), and causes the screed plate to rise. As it rises, V becomes less until it again equals W, at which time the vertical motion stops and the screed plate once again moves only in the horizontal direction in a path parallel to the direction of pull. The thickness of the mat is changed by either by tilting the screed plate using the screw or jack or by moving the pivot point of the pull arm vertically, assuming all other factors remain uniform.

"Nulling out the screed" is an expression used to describe adjusting the screed angle on both ends so that the screed plate rests flatly on starting blocks or other surface. When both the front edge and the rear edge of screed plate rest firmly on a surface, the adjusting screws will have a limited amount of free rotary movement. This means that the angle of attack of the screed is in the neutral or flat position. This will indicate that the screed is nulled out. CAUTION: Before attempting to null out the screed, be sure the screed lift is not restricting the full weight of the screed from resting on the surface or surfaces upon which it is being nulled out. Once the screed is nulled out, it is good practice to increase the angle of attack by turning each depth screw handle approximately one full turn (depending on the make of paver) from the nulled out position of the screed and start paving, checking and adjusting until proper mat depth is obtained. This practice usually results in an attack angle very close to that need to maintain the desired depth.

The weight of the screed exerts a compacting and compressing force as it passes over the asphalt mix. To compensate for this, ANGLE OF ATTACK is an adjustment, which raises only the front edge of the screed by an amount that causes the screed to climb enough to equal the amount of compaction by the screed. Exact angle of attack is always an unknown factor. Variation in mixes, temperature of mix, and paving speed are all variables, which effect the amount of angle of attack that is required. These variations must be kept to a minimum if a smooth mat is to be accomplished.

In order to keep the forces acting on the screed constant, the amount of material carried ahead of the screed should be kept uniform in height. Any variation in height will likely result in surface roughness. This will require maintaining sufficient material in the hopper to supply the spreading screws (augers) with just enough mix to cover the midpoint of the screws out to their ends. The material feed system, including the flow gates, augers, automatic feed control sensors and paver speed should be set so the slat conveyors and augers feeders operate as close to 100% of the time as possible.

The screed is continually attempting to bring or keep all of the forces in balance. This is why it is important to set the flow gates properly, keep the slat feeders operating uniformly and as continuously as possible, keep a uniform height of material in front of the screed, not over-control the screed, and maintain a uniform forward speed of the paver. The temperature of the mix must be kept uniform so that the viscosity of the mix does not change and influence the balance of forces acting on the screed. Uniformity of the mix, uniform and continuous operation of the paver and proper adjustment are the keys to smooth, dense pavements.

Figure 9-6
Forces Acting on the Screed During Paving Operations

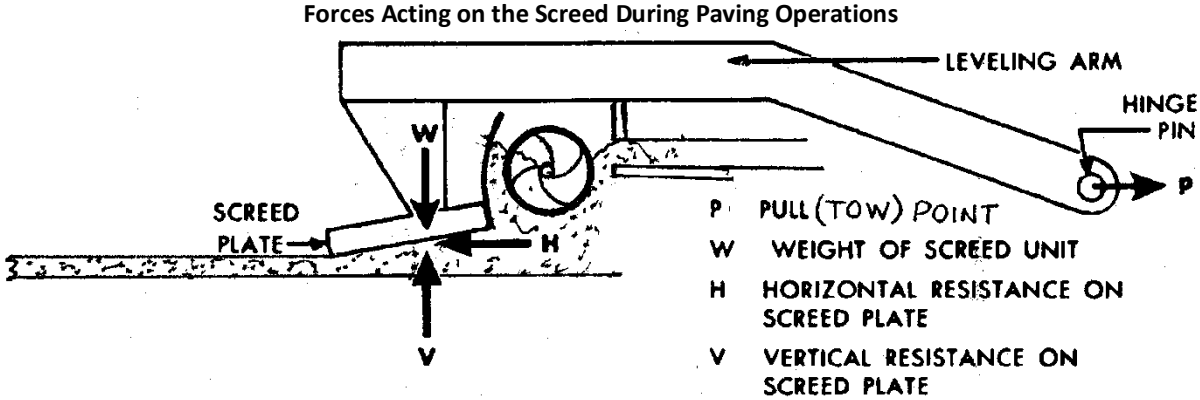

The asphalt mixture must be spread and finished to the required grades, cross sections, thickness and widths shown on the plans and typical sections and to uniform density and texture by the paver. Many working conditions and adjustments can be checked only by the end results or more specifically, by the quality of the mat that is placed. However, before work begins, certain checks on items that would obviously affect the work should be made.

The paver must be equipped with a fully activated and heated screed plate which is of adequate length to spread and finish the full uniform width travel lane being placed. The use of strike off devices, either mechanically or manually

operated shall not be permitted in spreading and finishing the mixture within the uniform width travel lane(s) since poor texture, low densities in these areas and an uneven mat are likely to occur. Strike off devices may be permitted where curve widening, tapers, varying pavement widths and aprons are occasionally encountered.

Where the required uniform width of mat placement is different from the basic paver screed width, the use of cut-off shoes may be used to reduce the width of the mat being placed. Likewise, factory manufactured, bolt on extensions capable of being heated and vibrated may be used to extend the width beyond the basic width of the screed. Extensions, which will produce a finished mat of the same texture and density as that of the basic screed, must be used. When screed extensions are used, the specifications require augers to be extended if necessary in order to maintain a uniform head of mix in front of the full length of the extended screed.

9.6.3 Use of Automatic Screed Controls

A 30 foot minimum length mobile grade reference system or a non-contacting laser or sonar type ski with at least four referencing stations mounted on the paver at a minimum length of 24 feet shall be used to control the longitudinal profile when placing the initial lanes and all adjacent lanes of all layers, including resurfacing and asphalt in-lays, unless otherwise specified or approved by the Engineer. A joint matching device short (6 inch shoe) may be used only when approved by the Engineer.

Utilize the automatic slope control system unless otherwise approved by the Engineer. The Engineer may waive the use of automatic slope controls in areas where the existing surface (subgrade, base, asphalt layer, etc.) exhibits the desired cross slope of the final surface. The Engineer may also waive the use of automatic slope controls in areas where the use of such equipment is impractical due to irregular shape or cross section (such as resurfacing). When the use of the automatic slope controls is waived, the Engineer may require the use of mobile grade references on either or both sides of the paver. Manual screed operation will be permitted in the construction of irregularly shaped and minor areas, subject to approval. Waiver of the use of automatic screed control does not relieve the Contractor of achieving plan grades and cross slopes.

In the case of malfunction of the automatic screed control equipment, the paver may be manually operated for the remainder of the work day provided this method of operation produces acceptable results. Do not resume work thereafter until the automatic system is functional.

The primary purpose of automatic screed controls is to produce a smoother pavement layer than the paver can accomplish by its self or the screed operator can accomplish by continually changing the setting of the thickness-control cranks. The automatic screed control functions by maintaining the elevation of the screed tow points in relation to a reference other than the wheel base of the paver itself. The elevation of the tow point is kept at a constant elevation in relation to a given grade reference. Automatic screed controls have five main components: (1) Grade sensor, (2) Pendulum, (3) Control box, (4) Command panel, and (5) Motors or cylinders to change the screed tilt. A diagram showing the components of one make of automatic screed control is shown in Figure 9-7. The automatic screed controls operate on the principle that if the screed tow point(s) are made to follow a smooth line and all other forces acting on the screed are kept constant, a smoother pavement profile grade will result, regardless of irregularities in the surface being paved. Slope, or transverse profile, is controlled by a pendulum adjusted for a particular slope, or may be controlled by a second profile control system on the opposite side of the paver.

Once the screed is set for the desired depth of spread, the automatic system takes over to produce a smooth mat. The command panel, the grade sensor, and the pendulum feed electronic impulses to a control box which activates the motors or hydraulic cylinders to change the relative elevation of the screed arm pull points, thereby changing the screed tilt (angle of attack) and automatically compensating for road surface irregularities.

The automatic screed controls get information from a sensing device riding on either an erected stringline that has been set as the grade reference, from a mobile reference device capable of averaging the grade over a minimum 30 foot distance or a non-contacting laser or sonar type ski with at least four referencing stations mounted on the paver at a minimum length of 24 feet, a joint matching device or some combination of these. The devices references from either the subgrade, base, adjacent lane, curb, or gutter or an erected stringline. These devices can be used for overlaying old pavements or for new construction. Sometimes a carefully installed stringline is recommended for new construction. The stringline can be placed on either or both sides of the paver. When placing the initial lanes and adjacent lanes of all courses, the paver must be equipped with a mobile reference device and should always be used where possible. This will automatically improve the pavement smoothness as adjacent lanes and courses are placed. When done properly provide depth control such that when completed it will match the depth of the existing lane. **The joint matching device (short ski) is used only when permitted by the Engineer. The joint matcher should not be permitted to ride on the gutter when placing the final layer in a curb and gutter section.** On all lanes of all layers, a minimum 30 foot mobile reference (ski pole) or non-contacting laser or sonar type ski with at least four referencing stations mounted on the paver at a minimum length of 24 feet should be used when placing the initial lane and all adjacent lanes**.** Paver manufacturers are

now recommending using the long referencing devices even when matching joints of adjacent lanes on the final layer. Different types of grade followers are shown in Figures 9-8, 9-9, and 9-10.

It should be noted that new automatic screed control systems are now available that utilize sonic and/or laser technology in lieu of or in conjunction with the 30-40 foot mobile string line. These systems have been used very successfully and are permissible under current NCDOT specifications.

Sensors on pavers equipped with electronic controls can be checked by varying the positions of the sensors relative to the surface being sensed and observing if the power on the screed controls respond and make the correct compensating adjustment in the screed pull points.

The sensor riding on either an erected stringline or mobile stringline transmits signals to the screed control to produce a paved mat behind the screed at a predetermined grade. The cross slope of the screed is normally set on the control panel. When a sensor or grade follower is linked in with a short ski, long ski, or other traveling reference device, the average thickness or average rate of spread may be adjusted by raising or lowering the sensor. Do not use the screw jacks to change the angle of attack of the screed. The average rate of spread or thickness may then be rechecked as explained earlier.

If the mat being placed is uniform and satisfactory in texture, and the thickness is correct, no screed adjustments are required. But when adjustments are required, they should be made in small increments and time should be allowed between the adjustments to permit the paver screed to complete reaction to the adjustments sequentially. The paver must travel the equivalent of approximately 5 lengths of the leveling or tow arm before the adjustment is fully accomplished.

It is equally important that the thickness controls on the screed not be adjusted excessively either in amount or frequency. Every adjustment of the thickness controls results in a change in elevation of the mat surface. Excessive changes in the surface elevation at the edge of the first mat are extremely difficult to match in the companion lane when constructing the longitudinal joint.

Figure 9-7
Components of an Automatic Screed Device

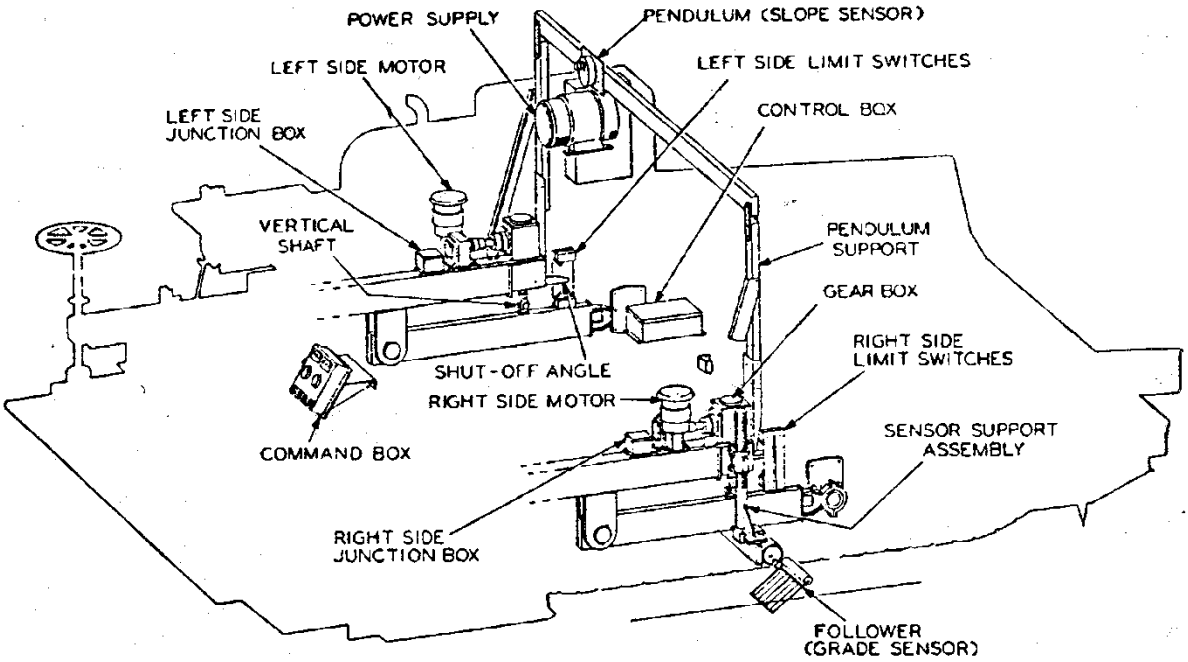

The automatic screed controls should be used all times possible because it can, in most cases, do a much better job than the manual control. If the automatic control equipment malfunctions, the manual controls may be used for remainder of that work day, provided satisfactory laydown is being achieved.

Figure 9-8
Short Mobile Grade Reference (Ski) (Joint Matching Device)

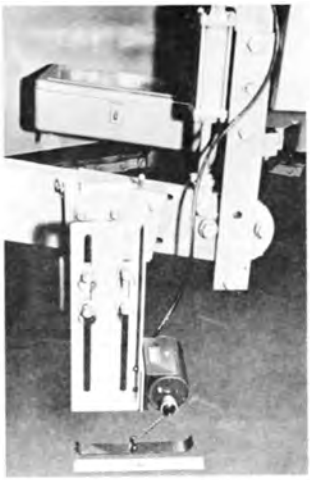

Figure 9-9
Long Mobile Grade Reference System (Sonic Type with 4 Referencing Sensors)

Figure 9-10
Long Mobile Grade Reference (Ski with Stringline)

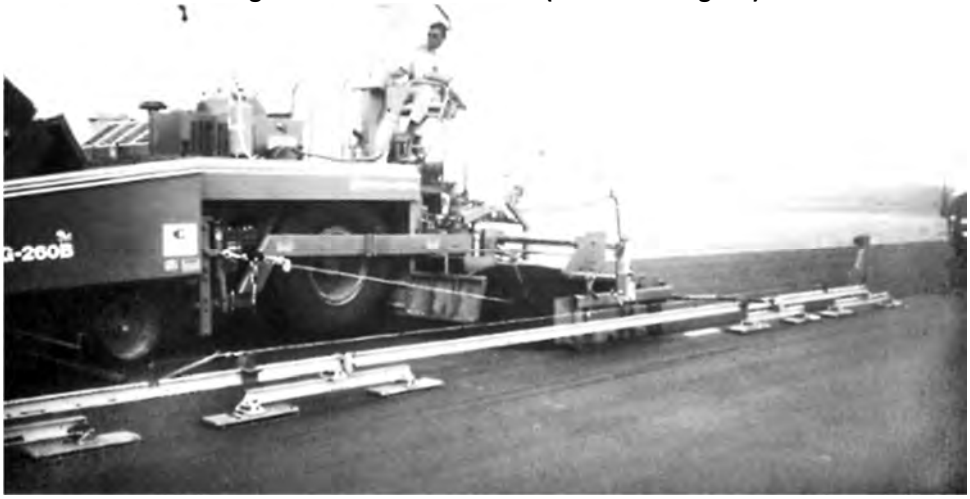

9.6.4 Handwork

Hand raking behind the screed should not be done unless absolutely necessary. The most uniform surface texture can be obtained by keeping hand work behind the screed to a minimum. This is especially true with crushed stone mixtures and mixtures requiring stiff graded asphalt binders. If the operations ahead of the paver are properly performed, if the equipment is in good condition and properly adjusted, and if the paver is not placing the mix at an excessive rate of speed, there should be little or no need for hand work. The raker, however, should be alert to a crooked edge on the mat so he can straighten it immediately. If the paver operator properly follows the guide line, the back work will not be necessary.

There are places on many jobs where spreading with a paver is either impractical or impossible. In these cases, hand spreading may be permitted. The Engineer will waive the requirement for use of pavers for spreading and finishing where irregularities or obstacles make their use impractical. Spread, rake, and lute the mixture by hand methods or other approved methods in these areas.

Placing and spreading by hand should be done very carefully and the material distributed uniformly so there will be no segregation of the coarse aggregate and the asphalt mortar. When the asphalt mix is dumped in piles it should be placed far enough ahead of the crew members that are shoveling to necessitate moving the entire pile Also, sufficient space should be provided for the workmen to stand on the base and not on the mixed material. If the asphalt mix is broadcast with shovels, almost complete segregation of the coarse and fine portions of the mix will result. A mixture placed by hand will have a different surface appearance than the same mixture placed by a machine.

The material should be deposited from shovels into small piles and spread with lutes. In the spreading process, all material should be thoroughly loosened and evenly distributed. Any part of the mix that has formed into lumps and does not break down easily should be discarded. After the material has been placed and before rolling starts, the surface should be checked with templates and straightedges and all irregularities corrected.

9.6.5 Shoulder Wedge

"Safety Edge" is a wedge of asphalt on the outside edge of a roadway pavement formed at a 30-degree angle to help minimize the problem of drop-offs. Roadway departures account for 53 percent of fatal crashes in the US. As a vehicle departs a roadway, drop-off or vertical pavement edges can create a "tire-scrubbing" condition and result in over-steering as the driver attempts to return to the roadway. "Safety Edge" aims to help that situation by providing a 30-degree angled edge for a vehicle to steer back onto the roadway to reduce over-steering into the adjacent lane.

When required by the contract, the Contractor shall form the edge in accordance with the Shoulder Wedge Special Provision and the details in the plans. The shoulder wedge should only be used on the surface layer(s) of asphalt. The shoulder wedge is formed by using a mechanical device or "shoe" installed onto the paver screed, whether internal or external, to create an edge by applying pressure to the asphalt being placed on the outside edge of the pavement. Instead of allowing the asphalt to fall from the screed, the shoe is engaged and forms an edge from that asphalt which has shown to be more durable. Regardless of the type of shoe being used to form the edge, the Contractor and Roadway Technician should ensure that the shoe has been properly engaged to create the 30-degree angled shoulder wedge. It is recommended to disengage the device when approaching paved driveways and side roads to allow for a smoother tie and hand work that typically will apply to these conditions. Failure to disengage the device can result in an unsatisfactory transition at these locations or damage to the device, especially if the drive or side road slopes above the roadway being paved.

9.7 COMPACTION OF ASPHALT PAVEMENTS

9.7.1 General

Compaction is the process of compressing a given volume of asphalt mix into a smaller volume. Compaction is accomplished by pressing the binder coated aggregate particles closer together, thereby reducing the air voids (space) in the mix and increasing the density (weight to volume ratio) of the mixture.

The need for a pavement to be compacted to the required density is better understood when the effect of air, water, and traffic on an under-compacted pavement is realized. The voids in an under-compacted mix tend to be interconnected and therefore, permit the intrusion of air and water throughout the pavement. Air and water carry oxygen which in turn, accelerates the oxidation of the asphalt binder in the mix, causing it to become brittle. Consequently, the pavement itself will ultimately fail as it can no longer withstand the repeated deflections due to traffic loading. The internal presence of water at freezing temperatures can also cause an early failure in the pavement due to expansion of the freezing water.

Compaction is considered successful when the finished mat reaches the minimum specified density for that mix type. NCDOT Specifications require that all asphalt mixes be compacted to a minimum of 92.0 percent of the maximum specific gravity (G_{mm}), except for SF9.5A and S4.75A mixes, which shall be 90.0 and 85.0 percent of maximum specific gravity (G_{mm}), respectively.

A pavement that has not been adequately compacted during construction has not developed the full potential design strength and therefore, may push, shove, and rut from traffic that is utilizing the pavement. However, unless the mix is properly designed and adequate voids remain in the compacted mix, the pavement will likely flush and tend to become unstable due to further reduction of void content under traffic and/or thermal expansion of the asphalt. The desired as-constructed void content is approximately 8 percent or less for the dense-graded mixes. At this level, the voids are usually not interconnected. When the air void content is too high, the pavement will tend to ravel and disintegrate. When the air-void content is too low, there is a danger of the pavement flushing and becoming unstable.

Compaction is accomplished by arranging the aggregate particles closer together in a position in which the asphalt binder can hold them in place. Compaction accomplishes two important goals:

(1) It develops the strength and rut resistance of the mix
(2) it closes passages through which water and air would otherwise penetrate thus causing faster aging, freeze-thaw damage, and stripping.

Compaction is the final stage of asphalt paving operations. It is the stage at which the full strength of the mixture is developed and the smoothness and texture of the mat is established. Therefore, the technician must be particularly observant of the compaction process. In addition to keeping accurate detailed records and observing that the operation is performed safely, the Technician must also be sure that compaction is done properly and that the finished pavement meets all specifications. To achieve this, the technician must understand the compaction procedure and the equipment involved. The Technician must acquire samples of the compacted mat or take readings with special instruments to determine mix density and smoothness.

9.7.2 Compaction Specifications

The following is from Article 610-9 of the Standard Specifications. However, the Technicians should always refer to the contract for any specific rolling, compaction, and equipment requirements.

Immediately after the asphalt mixture has been spread, struck off, and surface and edge irregularities adjusted, thoroughly and uniformly compact the pavement. Compact the mix to the required degree of compaction for the type of mixture being placed. Provide sufficient number and weight of rollers, except as noted, to compact the mixture to the required density while it is still in a workable condition. Obtain approval of equipment used in compaction from the Engineer prior to use. Where uniform density is not being obtained throughout the depth of the layer of material being tested, change the type and/or weight of the compaction equipment as necessary to achieve uniform density even though such equipment has been previously approved.

Compact all final wearing surfaces, except open-graded asphalt friction course, using a minimum of 2 steel wheel tandem rollers, unless otherwise approved. Pneumatic-tired rollers with 2 tandem axles and smooth tread tires may be used for intermediate rolling. Limit rolling for open-graded asphalt friction course to one coverage with a tandem steel wheel roller weighing a maximum of 10 tons, with additional rolling limited to one coverage with the roller where necessary to improve the riding surface.

Steel wheel tandem vibratory rollers which have been specifically designed for the compaction of asphalt pavements may be used on all layers 1 inch or greater in thickness during the breakdown and intermediate rolling phase. Do not operate vibratory rollers in the vibratory mode during the finish rolling phase on any mix type or pavement course, open-graded asphalt friction course, or on permeable asphalt drainage course.

When vibratory rollers are used, use rollers that have variable amplitude and frequency capabilities and which are designed specifically for asphalt pavement compaction. Provide rollers equipped with controls which automatically disengage the vibration mechanism before the roller stops when being used in the vibratory mode. The Engineer may prohibit or restrict the use of vibratory rollers where damage to the pavement being placed, the underlying pavement structure, drainage structures, utilities, or other facilities is likely to occur or is evident.

Do not use rolling equipment which results in excessive crushing of the aggregate or excessive displacement of the mixture. In areas inaccessible to standard rolling equipment, thoroughly compact the mixture by the use of hand tampers, hand operated mechanical tampers, small rollers, or other approved methods.

Use rollers which are in good condition and capable of being reversed without backlash to compact the mixture. Operate rollers with the drive wheels nearest the paver and at uniform speeds slow enough to avoid displacement of the mixture. Equip steel wheel rollers with wetting devices which will prevent the mixture from sticking to the roller wheels.

Begin compaction of the material immediately after the material is spread and shaped to the required width and depth. Carry out compaction in such a manner as to obtain uniform density over the entire section. Perform compaction rolling at the maximum temperature at which the mix will support the rollers without moving horizontally. Complete the compaction (including both breakdown and intermediate rolling) prior to the mixture cooling below a workable temperature. Perform finish rolling to remove roller marks resulting from the compaction rolling operations.

9.7.3 Asphalt Roller Types

Reference should be made to Article 610-9 which addresses compaction methods and equipment. The three basic types of rollers utilized for compaction of asphalt pavements are:

(A) Steel-Wheeled Rollers

Steel-wheeled rollers are of two basic types: Three-wheel and tandem.

Three-wheel rollers are equipped with two drive wheels on the same axle and a steering drum (see Fig. 9-11). The drive wheels are about 5 feet in diameter and 18 to 24 inches wide. The steering roll is smaller in diameter but wider. Weights vary from 5 to 14 tons. Three-wheel rollers are used mostly for breakdown or initial rolling of asphalt mixtures.

Figure 9-11
Three-wheeled Roller

Tandem rollers may be either two-axle or three-axle. Two-axle tandem rollers (Fig. 9-12) vary in weight from 3 to 14 tons or more. Most have wheels to which ballast can be added to increase the weight. Three-axle tandem rollers are made in sizes ranging from 10 to more than 20 tons. Most of these rollers can be increased in weight by adding ballast to the wheels. The center axle roll on the three-axle tandem rollers is arranged so that a large part of the total weight of the roller can be applied there, as required by high spots.

Steel-wheel rollers should be checked for wear on wheel rims. A sharp metal straightedge may be used for this check. The roller should not be used if grooves or pits have worn into the rolling drum. These rollers have scrapers for keeping rollers clean and wetting pads to keep rollers wet, so they do not pick up asphalt during the rolling operation. If they are worn excessively, they should be replaced.

Figure 9-12
Two Axle Tandem, Steel Wheel Roller

(B) Pneumatic-Tired Rollers

Self-propelled pneumatic tired rollers (Fig. 9-13) have two to eight wheels in front and four to eight wheels in the rear. The wheels on these rollers generally oscillate. (axle moves up and down) Self-propelled pneumatic tired rollers vary in weight from 3 to 35 tons. Ballast can be added to the machines to increase the weight.

Several models of self-propelled pneumatic tired rollers have a device to change tire inflation while the roller is operating. This "inflation-on-the-run" system automatically maintains any present tire pressure or can raise or lower inflation pressure while the roller is operating. Some compacting conditions and requirements require different inflation pressures. It is important for all of the tires be the same ply and have the same air pressure. This ensures all tires apply the same compactive effort on the pavement.

Figure 9-13
Self-Propelled Pneumatic-tired Roller

(C) Vibratory Rollers

Vibratory rollers are made with one or two smooth surfaced steel wheels 3 to 5 feet in diameter and 4 to 6 feet in width and which are specifically designed for asphalt pavement compaction (see Fig. 9-14).

Vibratory rollers vary in static weight from 1-1/2 to 17 tons. Some large tandem roller models have provisions for vibrating the third axle unit. Vibratory rollers normally may be used for compacting any type of asphalt mixture, provided the appropriate amplitude, frequency and speed is selected for the type mixture and thickness being placed.

Vibratory rollers may be used on all layers of asphalt pavements, except that operation in the vibratory mode will be permitted only during the breakdown and intermediate rolling phase on final wearing surfaces 1 inch (25mm) or greater in thickness. Operation in the vibratory mode will not be permitted during the rolling of open-graded asphalt friction course, during the finish rolling phase on any mix type or pavement course, or when the layer thickness is less than 1 inch (25mm).

The Engineer may prohibit or restrict the use of vibratory rollers where damage to the underlying pavement structure, drainage structures, utilities, or other components is likely to occur or is evident.

Three important factors to consider for vibratory roller operations:

1) Frequency (vpm);
2) Amplitude (height of bounce); and
3) Roller speed.

Recommended settings on vibratory rollers for different mixes are as follows:

Type Mix	Frequency (VPM)	Amplitude	Roller Speed
B25.0X, I19.0X ≥ 3” thickness	3000 - 3200	high/low amplitude	2-3 mph (normal walking speed)
S12.5X, S9.5X, S4.75A ≥ 1.5” thickness	3000 - 3400	low amplitude	2-3 mph (normal walking speed)
Consult Manufacturer’s recommendations for proper settings.			

Figure 9-14
Self-Propelled Tandem Vibrating Roller

9.7.4 Compaction Equipment Inspection

Prior to beginning paving operations, the Resident Engineer and/or the Roadway Technician must inspect the Contractor's compaction equipment to see that it meets all requirements of the Specifications and is in good working order. If the equipment meets Specifications and is in satisfactory operating condition a statement shall be entered in the Technician's Daily Diary. If it is not, the Contractor should be advised accordingly and corrective actions taken before paving begins. See the Checklist in this Section.

Before any of the rollers are used on a project they should be checked to see that they are in good mechanical condition and to assure their compliance with project specifications, if any. Where applicable, the following should be checked on all rollers:

1) Total weight;
2) Weight per unit of width (steel-wheeled rollers);
3) Average ground contact pressure (pneumatic-tired rollers);
4) Mechanical condition, Hydraulic Fluid & Fuel Leaks
5) Precise steering.

9.8 ROLLING AND COMPACTION PROCEDURES

Compaction of the pavement material must begin immediately after the material is spread, struck off, shaped to the required width, depth, cross-section, and edge irregularities adjusted. The mix must be compacted to the required degree of compaction for the type of mixture being placed. Compaction must be carried out in such a manner as to obtain uniform density over the entire section. Perform compaction rolling at the maximum temperature at which the mix will support the rollers without moving horizontally. Complete the compaction (including both breakdown and intermediate rolling) prior to the mixture cooling below a workable temperature. Perform finish rolling to remove roller marks resulting from the compaction rolling operations.

Most asphalt mixtures compact quite readily if spread and rolled at temperatures that assure proper asphalt viscosity. Rolling should start as soon as possible after the material has been spread by the paver, but should be done with care to prevent unduly roughening the surface.

A mix that is relatively stable at high temperatures as it leaves the spreader is compacted by the vertical movement of the aggregate particles under the roller. On any paving mixture the roller wheel must settle into the mix until the area of contact between the wheel and mix multiplied by the resistance of the mix is equal to the weight on the roller wheel. If the asphalt mix is quite firm, the roller will not cause any horizontal mix displacement.

Horizontal displacement results from apparent crawling of the mix ahead of the roller and the forming of ridges on either side of the roller path. If there is no horizontal displacement, there will be virtually no crawl or ridges along the edge of the roller path (see Fig. 9-15).

Horizontal displacement also results in a rough and uneven surface, thus defeating the intentions of careful grade control and good screed operation of the asphalt paver. Horizontal movement of the mix often occurs due to the breakdown roller being operated too fast.

Figure 9-15
Impressions Made by Roller Wheel on Freshly Spread Asphalt Pavement

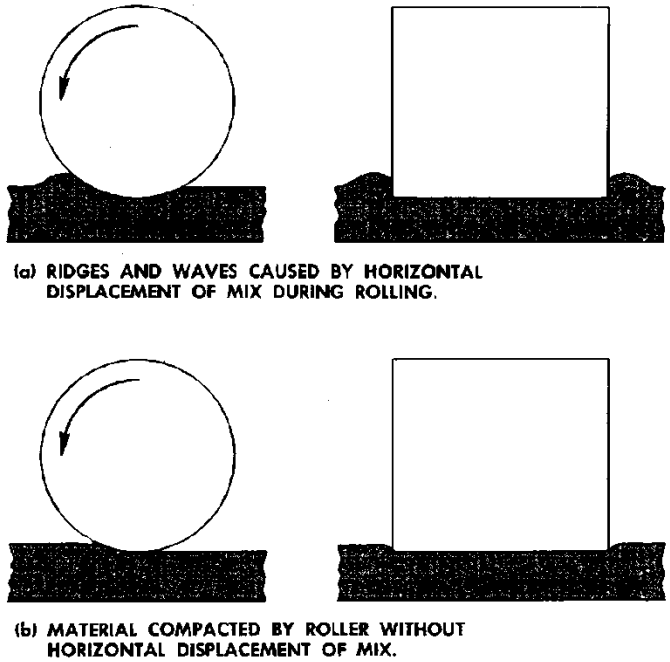

Mix temperature is a principal factor affecting compaction. Compaction can only occur while the asphalt binder is fluid enough to act as a lubricant. When it cools enough to act as an adhesive, further compaction is extremely difficult to achieve. The best time to roll an asphalt mixture is when its resistance to compaction is the least, while at the same time it is capable of supporting the roller without excessive shoving.

The best rolling temperature is influenced by the internal particle friction of the aggregates, the gradation of the mix, and the viscosity of the asphalt. Therefore, it can change if any of these factors change. The critical mix temperature in an asphalt concrete paving project is the temperature at the time of compaction. This should determine the temperature at which the plant is to produce the mixture. It is best to be able to compact the mix as quickly as possible after being spread, which means that it's best for the mixing temperature and the compacting temperature to be reasonably close to the same.

During rolling, roller wheels are kept moist with only enough water to avoid picking up material. **Diesel Fuel, Kerosene, or Fuel Oil shall not be used** to moisten roller wheels since it will damage the mix. Rollers should move at a slow but uniform speed with the drive roller or wheels nearest the paver. The speed should not exceed 3 mph for steel-wheeled breakdown rollers or 5 mph for pneumatic-tired rollers. Rollers must be kept in good condition, capable of being reversed without backlash. The line of rolling should not be suddenly changed or the direction of rolling suddenly reversed, thereby displacing the mix. Any pronounced change in direction should be made on stable material.

If rolling causes material displacement, the affected areas are loosened at once with lutes or rakes and restored to their original grade with loose material before being re-rolled. Heavy equipment, including rollers, should not be permitted to stand on the finished surface before it has thoroughly cooled or set.

Rolling freshly placed asphalt mix is generally done in the following order:

1) Transverse joints;
2) Longitudinal joints (when adjoining a previously placed lane);
3) Initial or breakdown rolling;
4) Second or intermediate rolling; and
5) Finish rolling.

When paving in echelon, 2 or 3 in. of the edge that the second paver is following are left unrolled when the joint between the lanes is rolled. Edges should not be exposed for more than 15 minutes without being rolled. Particular attention must be given to the construction of transverse and longitudinal joints in all courses.

All final wearing surfaces except open-graded asphalt friction course shall be compacted using a minimum of 2 steel wheel tandem rollers. Steel wheel tandem vibratory rollers, which have been specifically designed for the

compaction of asphalt pavements, may be used. **Vibratory rollers, operating in the vibratory mode, may generally be used on all pavement layers 1" or greater in thickness during the breakdown and intermediate phases of rolling.** Operation in the vibratory mode will not be permitted during the finish rolling phase on any mix type or pavement course or when the layer thickness is less than 1 inch.

Vibratory rollers must have variable frequency and amplitude capability. The rollers must be equipped with controls, which automatically disengage the vibration mechanism before the roller stops when being used in the vibratory mode. Vibratory rollers used on asphalt mixtures should normally be operated at high frequencies and low amplitudes and specifically designed for asphalt compaction.

Rolling of open-graded asphalt friction course will consist of one coverage with a tandem steel wheel roller weighing a maximum of 10 tons with additional rolling limited to one coverage where necessary to remove roller marks. Excessive rolling should not be allowed inasmuch as this leads to possible breakdown of the aggregate, thereby reducing the drainage capacity of the friction course layer. Vibratory rollers may be used on friction course provided they are operated in the static mode.

On all other mixtures, the number and weight of rollers shall be sufficient to compact the mixture to the required density while it is still hot and in a workable condition. Vibratory rollers may be used, as specified in above paragraphs, provided satisfactory results are obtained, excessive displacement or crushing of the aggregate does not occur, and no vibratory roller marks (indentations) remain in the finished surface. The Engineer may prohibit or restrict the use of vibratory rollers where damage to the underlying pavement structures, drainage structures, utilities, adjoining structures, or the pavement itself is likely to occur or is evident.

The use of a pneumatic tired roller is optional for compaction purposes on all mixes, unless otherwise required within a contract. Some Project Special Provisions within a contract may require the use of a rubber tired roller, therefore, it is essential that the roadway technician review all contract Project Special Provisions for this possible requirement.

While it is the Contractor's responsibility to determine roller requirements based on contract specifications, the technician is an essential part of this determination. The exact number of coverages (passes) that will be required to obtain adequate density is initially unknown. This is due to some uncertainty about the mixture's rate of cooling, among other things. These uncertainties are cleared up by careful observation, measuring, and testing during the early stages of the paving operation.

A number of studies have been made on the cooling rates of mixes under varying conditions of mix temperature, lift thickness and base temperature. Temperature is a fairly accurate estimate of the time interval in which density must be achieved. Table 9-2 can be used to determine the allowable time available in order to achieve satisfactory compaction. The allowable time can then be used to determine the number and types of rollers needed on the job.

Table 9-2
Cessation Requirements (Hot-Mix Asphalt)

	Recommended Minimum Laydown Temperatures for Various Thicknesses					
	1/2"	**3/4"**	**1"**	**1-1/2"**	**2"**	**3" +**
Base Temp. °F	**Mix Temp. °F**	**Mix Temp. °F**	**Mix Temp. °F**	**Mix Temp. °F**	**Mix Temp. °F**	**Mix Temp. °F**
20 – 32	----	----	----	----	----	285
32 – 40	----	----	----	305	295	280
40 – 50	----	----	310	300	285	275
50 – 60	----	310	300	295	280	270
60 – 70	310	300	290	285	275	265
70 – 80	300	290	285	280	270	265
80 – 90	290	280	275	270	265	260
90 +	280	275	270	265	260	255
Rolling Time (minutes)	*4*	*6*	*8*	*12*	*15*	*15*

9.8.1 Factors Affecting Compaction

Major factors affecting compaction can be categorized into five classes. These are:

(A) Mix properties (Aggregate, Binder, and Temperature)
(B) Environmental conditions (See Section 9.4)
(C) Layer (lift) thickness (See Section 9.4)
(D) Subgrade and Bases
(E) Compaction equipment and procedures

(A) Mix Properties

Properties of various asphalt binders and aggregates have a pronounced effect on the workability of mixes at different temperatures. These properties, and the temperature of the mix at the time of compaction, must be considered when deciding on a compaction procedure.

(1) Aggregate

Gradation, surface texture and angularity are the primary aggregate characteristics that affect workability of the mix. As the maximum aggregate size or percentage of coarse aggregate in the mix increases, the workability decreases and greater compactive effort is required to achieve target density. Similarly, a rough surface texture, as opposed to a smooth, glassy aggregate surface, results in a more stable mixture and requires greater compactive effort. Mixtures that are produced from gravel material, frequently are more rounded than quarry rock and thus more workable.

Natural sands are often added to mixes in the interests of economy. Too much sand will result in tender mixes (mixes with high workability, but low stability). Tender mixes are easily overstressed by heavy rollers and too much rolling. They are often susceptible to scuffing and displacement by traffic after several weeks in place. The fines or filler content in the mix will also affect the compaction process. It is the combination of filler and asphalt that provides the binding force in asphalt pavements; therefore, the mix should contain sufficient fines to combine with the asphalt to produce the necessary cohesion when the mix cools. The addition of mineral filler will help to offset the tenderness or slow-setting properties of mixes containing too much sand. Conversely, if a mix contains too many fines it will become "gummy" and very difficult to compact.

(2) Asphalt Binder

At room temperature asphalt binder is virtually a solid, whereas at 265° - 350°F it is a fluid. For a mix to be properly compacted, the asphalt in it must be fluid enough to permit the aggregate particles to move past one another. In effect, the binder acts as a lubricant during compaction. As the mix cools, the asphalt loses fluidity (becomes more viscous) and becomes stiffer. At temperatures below approximately 185°F, the asphalt, in combination with the fines in the mix, begins to bind the aggregate particles firmly in place. Consequently, compaction of the mix is extremely difficult once the mix has cooled below a workable temperature. The grade of asphalt binder that is used and the temperature at which the mix is produced determine its viscosity. Other factors being equal, a higher viscosity asphalt in the mix may require a slightly higher compaction temperature and/or greater compactive effort. The asphalt quantity in the mix will also affect workability. As the asphalt content increases, the film thickness of the asphalt on the aggregate particles increases. At compaction temperatures, this increased film thickness increases the lubricating effect of the asphalt and up to a certain point makes compaction easier. However, excessive asphalt binder in the mix may cause the mix to be ”tender”, allowing it to push and shove under the rollers and therefore, difficult to compact to the required density.

(3) Mix Temperature

Mix temperature is one of the principle factors affecting compaction. The temperature at which an asphalt mixture is produced affects both the ease of compaction and the time it takes for the mix to cool below a minimum workable temperature at which densification can normally take place. Up to a certain point the hotter the mix, the more fluid the asphalt and the less resistant the mix is to compaction. The upper limit for mix temperature is approximately 350°F. Higher temperatures may result in damage to the asphalt. The lower temperature at which compaction is effective is approximately 185°F. Within these limiting values, 185° - 350°F, the best temperature to begin rolling (compaction) is the maximum temperature at which the mix will support the roller without damaging the mix in any form (i.e. horizontal movement, mix sticking to roller drums, etc.). The upper end of this range, 250°- 350°F, will allow the most densification of the mix during the initial phase of the rolling operation. The complete compaction rolling operation should be finished prior to the mix temperature getting below a workable temperature.

At the time of placement, the mix temperature is uniform throughout the thickness of the mat. However, the top and bottom surfaces cool more rapidly than the interior because they are in contact with the cooler air and subgrade. Heat checking is a rather common occurrence during compaction of asphalt concrete mixes, particularly when the mix is placed in thin lifts. Figure 9-16 is a side view of heat checking in a mix being compacted. Heat checking happens most frequently when the tiller wheel of the roller is in front in the direction of travel during the breakdown pass. The horizontal arrows shown between the surface of the mix and the dotted line represent the horizontal thrust of the tiller wheel in the mix. The curve to the right of the figure represents the temperature profile in a layer approximately 2 inches thick. The temperature at the surface is 250°F. The temperature at the mid-point is 290°F, while the temperature at the bottom is between 250°F and 260°F.

Figure 9-16
Heat Checking (Side View)

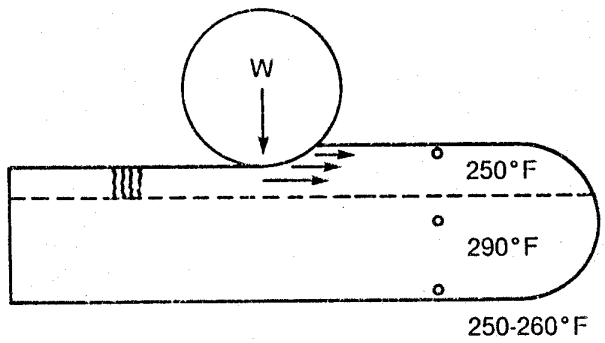

The illustration shows the most frequent reason for heat checking. The tiller wheel has sunk some depth into the mix and is exerting a horizontal thrust, which must be resisted by the mix itself. Since the mix is hottest at its mid-point, the asphalt viscosity is lower there than at the surface. Because of the horizontal force of the wheel, the mix tends to move horizontally at some depth (illustrated by the dotted line in the figure). This means that the mix at the surface must also move. But the surface of the mix is stiffer due to its lower temperature, and responds by cracking in order to move along with the mix at the lower depth. This results in the so-called hairline cracks to the level that horizontal movement is occurring in the mix, generally 3/8 to 1/2 inch in depth. These are shown by the vertical lines behind the roller drum.

A top view of the hairline cracks that result from heat checking is shown in Figure 9-17. They tend to be 3 to 4 inches long, unconnected with each other. If they were connected and extended, they would form a crescent as shown in this figure. A crescent shaped crack in an asphalt mixture is typical of the slippage movement. This is exactly what happens under a roller when heat checking occurs with the slippage occurring in the mix at the depth shown by the dotted line in Figure 9-16, i.e., the mix is slipping within itself. As in any type of slippage distress, the crescent opens in the direction of the forces causing the slippage. In the case of heat checking, the hair crack pattern usually opens up in the direction of rolling when the unpowered tiller wheel is leading.

Figure 9-17
Heat Checking (Top View)

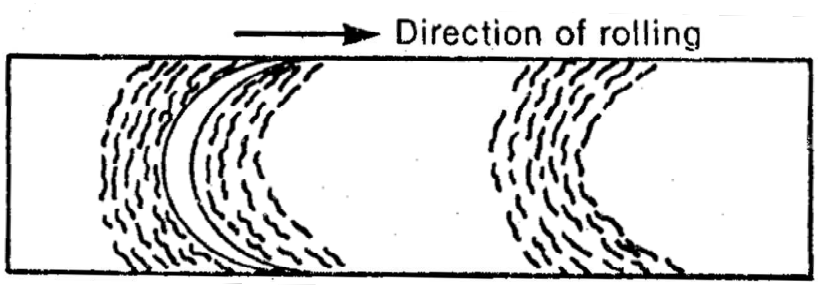

The same type of crack pattern shown for heat checking can also occur if slippage is occurring at a greater depth, such as at the surface on which an asphalt lift is being placed. In this case, the cracks have the same general configuration. However, they are longer, open up wider, 1/4 to 1 inch and extend through the mix to the level of horizontal movement. Again slippage is occurring but at a greater depth. It is a rare case when heat

checking occurs under a drive-wheel of a steel roller. It almost always occurs under the tiller wheel. Steel-wheeled rollers should not have ballast in the tiller wheel. The heavier the weight in the small diameter wheel, the deeper it sinks into the mix with a resulting increase of horizontal force being imparted during the rolling operation, and the greater likelihood of heat checking or other slippage distress.

(B) Environmental Effects

As explained above, the rate at which the mix cools affects the length of time during which density can and must be achieved. Cool air temperatures, high humidity, strong winds, and cool surfaces, either individually or in combination shorten the time in which compaction must take place and may also make compaction more difficult. When any of these conditions exist, it is extremely important that the compaction rolling operation follow closely behind the paver so there is no delay between placing and compacting the mat. When thin lifts are being placed from late fall to spring or during cool weather, this is especially true if specification density and tight, smooth surface textures are to be achieved.

(C) Layer Thickness

Generally speaking, it is easier to achieve target density in thicker layer (lifts) of asphalt concrete than in thinner ones. This is because the thicker the mat the longer it retains its heat and the longer the time during which compaction can be achieved. This can be used to advantage when rolling lifts of highly stable mixes that are difficult to compact, or when paving in weather that can cause rapid cooling of thin mats. Alternatively, increased course thickness can permit lower mix temperatures to be used because of the reduced rate of cooling. (see Table 9-2)

(D) Subgrade and Bases

The subgrade or base must be firm and non-yielding under the haul trucks and other construction compaction equipment. Subgrades or bases that show movement under trucks or construction equipment will need additional compaction work or some type of remedial work to overcome the softness. The remedial work could be lime or Portland cement stabilization, or in certain circumstances, removal and replacement with a more suitable material. A yielding subgrade or base would require a thicker HMA pavement in order to support the traffic loading. Haul trucks may also be limited in size and weight to prevent pumping action of base materials. If remedial action is not performed to correct a yielding subgrade or base, (i.e. a resurfacing project), then it may be difficult to achieve the specified density.

(E) Compaction Equipment and Procedures

Compaction is done by any of several types of compactors, or rollers – vehicles which, by their weight or by exertion of dynamic force, compact the pavement mat by driving over it in a specific pattern. Compaction aims at producing a mat of specific density (target density) and smoothness. Although the compaction process appears rather simple and straightforward, it is, in reality, a procedure requiring skill and knowledge on the part of the roller operator and the technician. Both must have a thorough understanding of the mechanics of compaction and the factors that affect the compaction effort.

9.8.2 Three Phases of Rolling

There are three basic phases in the compaction process of asphalt pavements:

(A) Breakdown phase;
(B) Intermediate phase;
(C) Finish phase.

Each of these are described in detail below.

(A) Breakdown Rolling

Breakdown rolling is best accomplished with steel-wheeled rollers. Either static-weight or vibratory tandem rollers may be used. Vibratory rollers may be used in the vibratory mode on all mixes, except that on the final wearing surface the thickness must be 1 inch or greater before use is permitted. The weight of the roller used for breakdown rolling depends to a large degree upon the temperature, thickness, and stability of the mix being placed. Generally, a roller weighing from 8 to 12 tons is used for this operation.

Many old compaction specifications recommend the compaction process begin on the low side of the pavement lane and proceed upwards toward the high side. With modern compaction equipment and more stable mixes, this process is usually unnecessary unless the superelevation is extreme or the mix lift is thick in relation to its

aggregate size. When adjoining lanes are placed, it is normally best to compact the longitudinal joint by placing the majority of the roller on the hot (new) mat and overlapping the joint by a distance of approximately 6 inches over the cold mat. This way the majority of the compaction effort is where it is needed - on the new mat.

(B) Intermediate Rolling

Second or intermediate rolling should closely follow breakdown rolling while the asphalt mix is still plastic and at a temperature that is still well above the minimum temperature at which compaction can be achieved, preferably 225° - 250°F. Pneumatic-tired, steel-wheeled static and vibratory rollers may be used for intermediate rolling. When using pneumatic rollers, keeping the tires hot is the most effective means of preventing pickup. Applying a small amount of non-foaming detergent or water soluble oil on the wetting mat of a pneumatic-tired roller at the beginning of rolling operations helps prevent asphalt from sticking to the tires until they warm up.

Pneumatic-tired rollers have several advantages:

a. They provide a more uniform degree of compaction than steel-wheeled rollers;
b. They improve the seal near the surface, thus decreasing the permeability of the layer; and
c. They orient the aggregate particles for greatest stability, as high pressure truck tires do after using the asphalt surface for some time.

Tire contact pressures should be as high as possible without causing displacement of mix that cannot be remedied in the final rolling. Pneumatic-tired rolling should be continuous after breakdown rolling until all of the mix placed has been thoroughly compacted. At least three passes should be made. Turning of pneumatic-tired rollers on the paving mix should not be permitted unless it can be done without causing undue displacement.

Vibratory tandem rollers of proper static weight, vibration frequency and amplitude are used to provide required densities with fewer roller passes than static-weight tandem or pneumatic-tired rollers (or combinations of the two). As mentioned previously, the vibratory roller may be used in the vibratory mode, at any time (subject to Specification requirements) on all pavement layers during the breakdown and intermediate phases of rolling.

(C) Finish Rolling

Finish rolling is done primarily for the improvement of the surface. It should be accomplished with steel-wheeled, static-weight tandems or non-vibrating vibratory tandems while the material is still warm enough for removal of roller marks. Only enough passes should be made to remove the roller marks and smooth the mat. Finish roller operators should be cautioned about over rolling the mat since it can decrease the mix density. Vibratory rollers operated in the vibratory mode are not permitted as finish rollers.

9.8.3 Roller Patterns

A rolling pattern that provides the most uniform coverage of the lane being paved should be used. Rollers vary in widths, and a single recommended pattern that applies to all rollers is impractical. For this reason, the best rolling pattern for each roller being used should be worked out and followed to obtain the most uniform compaction across the lane. For purposes of this and future discussion, the following definitions apply. A roller "pass" is defined as one trip of the roller in one direction over any one spot in the pavement. A “coverage” is defined as the sufficient number of passes to cover the entire laydown width of pavement.

The rolling pattern not only includes the number of passes, but also the location of the first pass, the sequence of succeeding passes, and the overlapping between passes. Breakdown rolling speed should not exceed about 3 mph. In addition, sharp turns and quick starts or stops are to be avoided. For thin lifts, a recommended rolling pattern for static steel-tired rollers is shown in Figure 9-18. The rolling operation should start from the edge of the spread on the low side with the roller moving forward as close behind the paver as possible. The second movement of the roller should be to reverse in the same path until the roller has reached previously compacted material. At this point it should swing over and move forward along path number 3, again going as close as possible behind the paver. The fourth movement is reversal in the third path and a repetition of the previous operation. After the entire width of the mix being placed has been covered in this fashion, the roller should swing across the spread to the low side and repeat the process. With this pattern, the lap of the roller with succeeding passes need not be more than 3 to 4 inches.

Figure 9-18
Correct Rolling Pattern

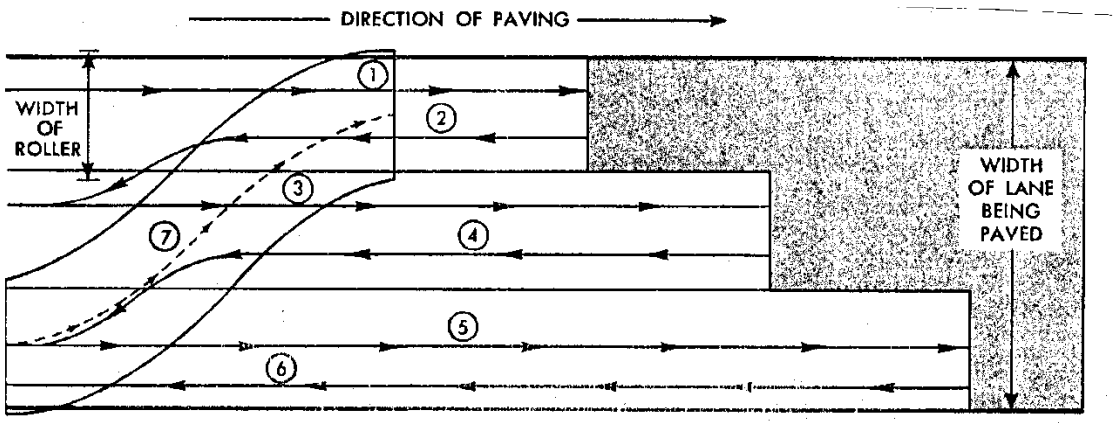

This is a recommended rolling pattern. Every pass of the roller should proceed straight into the compacted mix and return in the same path. After the required passes are completed, the roller should move to the outside of the pavement on cooled material and repeat the procedure.

For thick-lift construction, the rolling process should start 12 to 15 inches from the lower unsupported edge until the center portion of the spread is compacted to some degree of stability. Succeeding passes of the roller should then gradually progress toward the edges of the spread. The uncompacted edge provides initial confinement during the first pass, thus minimizing lateral movement of the mix. After the central portion of the spread has been compacted, the mix will support the roller and allow the edge to be compacted without lateral movement.

With steel-wheeled rollers the operation should always progress with the drive wheel forward in the direction of paving. This is especially important in breakdown rolling. The greatest percentage of compaction occurs during a breakdown pass. A main reason why breakdown rolling should be done with the drive wheel is that there is a more direct vertical load applied by this wheel than the tiller wheel (see Fig. 9-19).

If the breakdown pass of the roller is made with the tiller wheel forward, the pushing force and the weight is slightly ahead of vertical, causing material to push up in front of the wheel. The greater weight of the drive wheel carries out the compaction while the turning force tends to tuck material under the front of the wheel. There are exceptions to rolling with the drive wheel forward, however. They usually occur when superelevations are being constructed or if the grade on which the asphalt mix is being placed is excessive. The exceptions occur when, due to these high grades, the drive wheel of the roller begins to chatter on the mat, causing displacement of the mix and a very rough surface. In these cases the roller must be turned around to allow the tiller wheel to partially compact the material so that the drive wheel can then proceed over it.

Figure 9-19
Forces Acting When Tiller Wheel or Drive Wheel is Forward

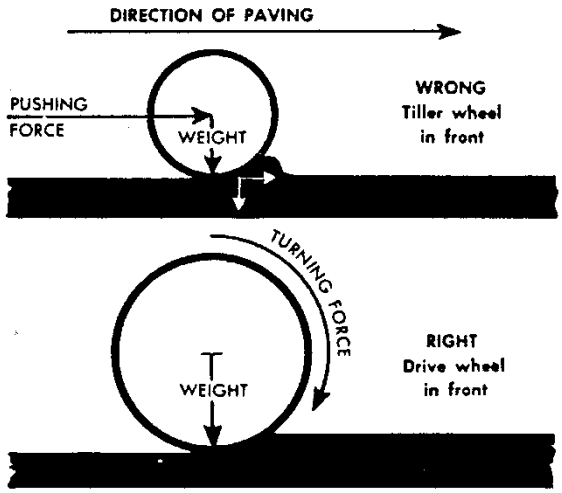

9.9 CONSTRUCTING TRANSVERSE JOINTS

9.9.1 Transverse Joint Specifications

When the placing of the mixture is to be suspended long enough to permit the mixture to become chilled, construct a transverse joint (see Table 9-2). If traffic will not pass over the end of the paving, a butt joint will be permitted, provided proper compaction is achieved. If traffic will pass over the joint, construct a sloped wedge ahead of the end of the full depth pavement to provide for proper compaction and protection of the full depth pavement. Construct the joint square to the lane alignment and discard all excess material. Place a paper parting strip beneath this wedge to facilitate joint construction unless waived by the Engineer.

Before paving operations are resumed, remove the sloped wedge and cut back into the previously constructed pavement to the point of full pavement depth. Coat the exposed edge of the previously constructed pavement with tack coat. When laying of the mixture is resumed at the joint, complete and then test the construction and smoothness of the joint in accordance with Article 610-12 while the mixture is still in a workable condition and can be corrected.

9.9.2 Construction Procedures

A transverse joint is constructed at any point where the paving operation is interrupted for a period of time (15 minutes or more) and the paving operation is to be resumed later. The type of transverse joint to be constructed depends primarily on whether traffic will be traveling over the mat before paving is resumed. A poorly constructed transverse joint is noticeable as a pronounced bump in the pavement. Consequently, the Technician must be on hand whenever a transverse joint is made in order to ensure it is done properly. Discovering hours after construction that a transverse joint is unsatisfactory does no good, because joint construction can only be corrected while the mix is still hot and workable. Once the mix cools, corrections can be made only by cutting out and replacing the joint.

Transverse joints are constructed in three steps: (A) ending the lane or width of pavement (with proper compaction and thickness) at the point of work stoppage, (B) resumption of paving operations at a subsequent time, and (C) rolling the transverse joint. These steps are described below.

(A) Ending a Lane:

When ending a lane (for whatever reason) and paving is to be later resumed, the objective is to end with full depth pavement and to establish a vertical face on the mat such that when paving is resumed, full depth pavement can be placed, beginning at the joint. This can be accomplished by the use of either a butt joint or a paper tapered joint as required by the traffic situation. Ending a lane should generally be done in the following manner.

(1) When the paver is placing the last load, operate the paver in normal fashion as it approaches the location of the proposed joint.

(2) As the hopper begins to empty and the amount of material in the screed chamber decreases below normal operating level, the paver is stopped.

(3) The screed is raised and the paver moved out of the way.

(4) Excess asphalt mix is then shoveled away from the end of the mat to form a straight, full thickness, clean, vertical edge at the selected location.

(5) If a butt joint is to be constructed, place runoff boards of sufficient thickness, length, and depth next to the joint to support the roller during compaction so as to result in a full depth mat with a vertical face. Complete compaction and remove boards as necessary.

(6) If a paper tapered joint is required, place treated release wrapping paper is placed along the edge as shown in Figure 9-20. Paper joints are required per Standard Specifications Article 610-11, unless waived by the Engineer. The material that was shoveled away in Step 4 is replaced and used to form a taper. The suggested minimum length to compacted thickness ratio of the taper is 12:1.

(7) Compact the mat to the required density.

Figure 9-20
Paper Joint

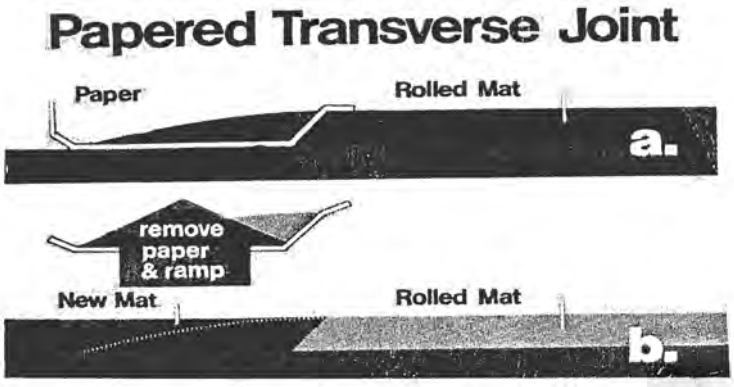

(B) **Resumption of Paving Operations:**

When construction is ready to be resumed, the following procedure is used to form a smooth and durable transverse joint.

(1) The taper material is removed and discarded or recycled along with the board or paper.

(2) A 10 ft. straightedge is used to check the longitudinal grade of the mat. Because the paver was running out of material as it laid the last few feet of mat, it is possible that those last few feet taper slightly (ramp down) from the specified level of the mat. If this is the case, a new transverse vertical edge must be cut at the point of full pavement depth behind the point where the ramping down begins (see Article 610-11 of the Standard Specifications).

(3) The vertical face and pavement surface of the mat is tack-coated.

(4) The paver is backed up to the edge of the mat and the screed rested on the mat surface.

(5) The screed is heated while it rests on the mat. This provides some heat to the material at the edge of the mat.

(6) The heated screed is raised and at least 3 shims or starting blocks as thick as the difference between the uncompacted and compacted mat are positioned under it. The starting blocks should extend the full length of the screed, front to back.

(7) Null the screed and set the proper angle of attack on both sides of the paver.

(8) The truck with the first load of mix is backed carefully to the hopper. During discharge of the mix from the truck bed to the paver, it is essential that the truck not bump the paver, and cause it to move.

(9) Activate the material feed system and bring the head of material in the auger chamber up to the proper level (up to the auger shaft) across the entire width of the screed.

(10) Start the paver forward, pull the screed off the starting blocks, and bring the paver to the desired laydown speed as quickly as feasible. Adjust the angle of attack as necessary to provide the proper loose thickness of the asphalt mat.

(11) Once the paver has moved away, excess mix is cleaned off the surface of the mat and the joint is checked with a straightedge to assure smoothness and that adequate loose material has been placed to allow for compaction.

(C) **Rolling and Compacting Transverse Joints:**

Ideally, a transverse joint should be rolled transversely; however, because of maintaining traffic, site restrictions, safety, slopes, etc., most transverse joints are rolled in the longitudinal direction. This can be satisfactorily accomplished as long as the initial elevation of the new mix is sufficiently above that of the old mix on the cold side of the joint to allow for full compaction. Rolling and compaction should be accomplished as quickly as possible after the paver has moved off the joint and checked for smoothness and loose thickness relative to the elevation of the cold side of the joint. The roller should pass slowly and completely over the joint before the roller is reversed. Once the joint has been compacted, it must be checked for smoothness. Do not exceed 1/8 in (3.2mm) variation between any two contact points using a 10 ft. straightedge. If the joint is satisfactory, no further work is necessary. If the straightedge shows an uneven joint, the surface of the new mat must be scarified while still warm and workable. Scarification is done, preferably with a tined lute. Excess material can then be removed or additional material added, and the joint rolled and rechecked.

9.10 CONSTRUCTING LONGITUDINAL JOINTS

9.10.1 Longitudinal Joint Specifications

Tack the exposed edge of all longitudinal joints prior to placing the adjoining pavement. Form longitudinal joints by allowing the paver to deposit the mixture adjacent to the joint to such depth that maximum compaction can be obtained along the joint. Pinch the joint by rolling immediately behind the paver.

When multi-lane multi-layer construction is required, offset the longitudinal joints in each layer from that in the layer immediately below by approximately 6 inches. Construct the joints in the final layer, where possible, between designated travel lanes of the final traffic pattern.

9.10.2 Location Of Longitudinal Joints

The location of longitudinal joints must be carefully planned to achieve durable joints. The width of spread is controlled in many instances by the location of the longitudinal joint. The Standard Specifications, as noted above, require that when a multi-lane multi-layer pavement is being constructed, the longitudinal joints in each layer must be offset from the joint in the layer immediately below by approximately 6 inches (see Fig. 9-22). Overlapping of successive courses rather than stacking the joint directly on top of the joint below helps to prevent cracking and separation along the longitudinal joint. The locations of joints must also be planned such that the joint in the final layer of pavement is located, where possible, between designated travel lanes of the final traffic pattern. This will assure that the joint is not located in the wheel path of a lane. Joints located in a wheel path have a detrimental effect on ride quality and are more susceptible to water intrusion under traffic during rain or snow.

Figure 9-22
Overlapping of Successive Courses to Helps To Prevent A Crack From Opening Along a Longitudinal Joint

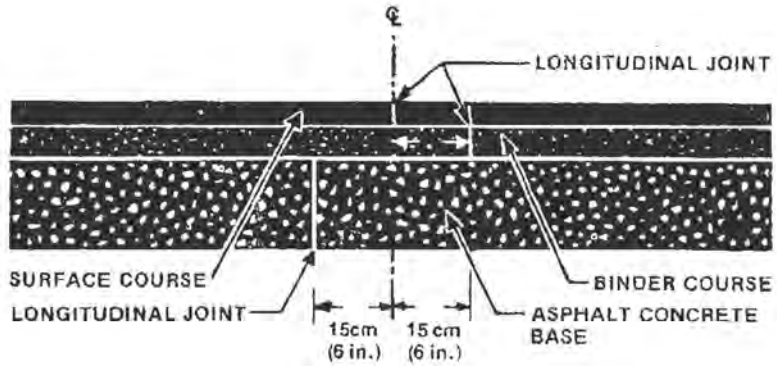

9.10.3 Construction of the First Lane

Two key factors that affect the long term durability of a longitudinal joint are built into the pavement during construction of the first lane. One is the importance of running the paver in a straight line so the joint can be matched on the next pass of the paver. The other is the need to properly compact the unconfined edge of the first lane. In laying the first lane, a stringline, curb, or other reference line must be used to guide the paver on the proper course. It is also important, for good results, that the thickness adjustment controls on the paver not be over-controlled. If an extendable screed is used, its width must be kept constant. Moving the extension in and out will create an uneven edge that will be very difficult to match.

To achieve proper density at the longitudinal joint, it is essential to compact the unconfined edge of the first lane correctly. The edge of the drum on a vibratory or steel wheel roller should extend out over the edge of the mix a minimum of 6 inches when the first lane is being compacted.

9.10.4 Construction of the Adjoining Lane

Tack the exposed edge of all longitudinal joints prior to placing the adjoining pavement.

Form the longitudinal joint by allowing the paver to deposit mixture adjacent to the joint to such depth that maximum compaction can be obtained along the joint. If the level of the new uncompacted mix is even with or below the level of the adjacent compacted mix, steel wheel compaction equipment will not be able to properly densify the mix along the joint. Whether the first pass of the roller is primarily on the hot side of the joint or primarily on the cold side, the roller will bridge the mix at the joint leaving it essentially uncompacted or only partially compacted. Therefore, it is imperative that the level of the uncompacted mix at the longitudinal joint be above that of the compacted mix by

approximately 1/4" for each 1" of compacted pavement. The longitudinal joint should be rolled immediately behind the paving operation.

When placing the adjoining lane, it is important that the adjoining lane be placed so that the mix uniformly overlaps the first lane by 1 to 1.5 in. (see Fig. 9-23a). The thickness of the overlap should be about one-fourth the desired compacted thickness. This is the preferred method of longitudinal joint construction. If the longitudinal edge of the first lane is straight and the correct amount of overlap is used, the amount of raking will be minimal. If the overlapped material is slightly excessive, the excess overlapping material may be bumped or crowded back onto the hot lane so that the roller can crowd the small excess into the hot side of the joint (see Fig. 9-23b). When the overlap is excessive, the excess material should be trimmed off so that the bumped ridge of material along the joint is uniform. In no case should the raker broadcast the excess mix across the width of the new lane.

A trimmed joint is sometimes used (see Fig. 9-23c). This joint is constructed by removing all freshly placed material that has overlapped the rolled lane. This is best done by trimming the joint immediately behind the paver with a square-ended shovel. Again, in no case should the mix be broadcast across the width of the new lane.

If the lanes are placed simultaneously with two pavers moving in echelon, the loose depths of the mats should match exactly, with no overlap for a hot joint. The joints of a freshly paved mat are usually compacted before the rest of the paved width.

Figure 9-23
Constructing and Preparing Longitudinal Joints

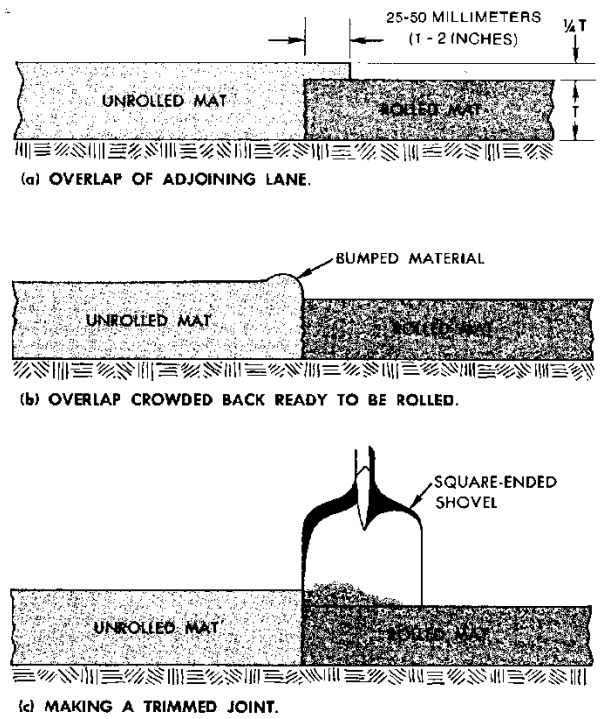

9.10.5 <u>Rolling and Compaction of Longitudinal Joints</u>

Longitudinal joints should be rolled directly behind the paving operation. The most efficient and recommended way to compact a longitudinal joint is to place the roller on the hot (new) mat so that approximately 6 in (150mm) rides on the cold (existing) adjoining lane (Fig. 9-24 and Fig. 9-25). The roller is operated here to pinch and press the fines into place and provide adequate compaction to the joint and the hot mat adjoining the joint.

In the past it was common practice to do the initial rolling of the longitudinal joint from the cold side of the joint, frequently referred to as “pinching the joint”. On the first pass, only about 6 in. of the width of the roller rides over the fresh mat, compressing the mix at the joint. The majority of the compactive force is wasted because the roller is essentially applying its compactive force to an already compacted mat. In the meantime, the rest of the mat is cooling, possible causing density to be more difficult to achieve.

Regardless of the rolling method or equipment used, <u>the level of the uncompacted mix at the longitudinal joint must be above that of the previously compacted mix by an amount equal to approximately 1/4 in. for each 1 in. of compacted pavement</u> if proper compaction of the mix at the joint is to be accomplished. If it is not, the compaction equipment will bridge the mix at the joint, leaving it essentially uncompacted or only partially compacted.

Figure 9-24
Rolling a Longitudinal Joint

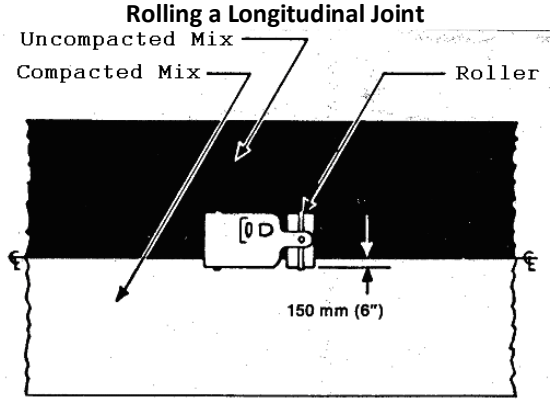

Figure 9-25
Joint Rolling Procedure

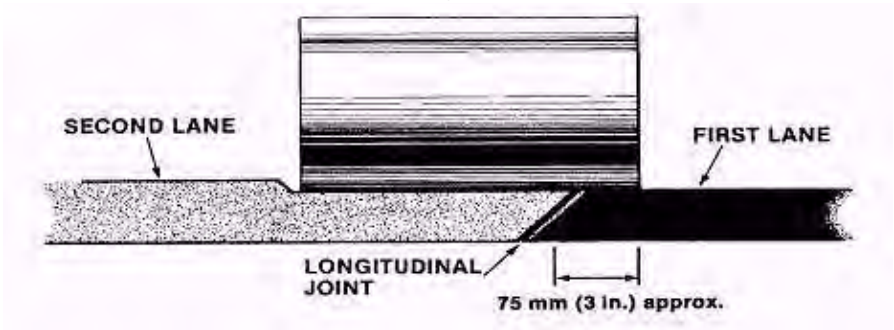

9.11 SIGNIFICANT DECIMALS FOR ROADWAY CALCULATIONS

The following rule of "rounding off" shall be used in all calculations. When the digit to be dropped (one digit beyond significant digit) is 0, 1, 2, 3 and 4, the preceding digit will not change. When the digit to be dropped (one digit beyond significant digit) is 5, 6, 7, 8 and 9, the preceding digit will be increased by one.

NOTE: Do not round one digit beyond the significant decimal prior to rounding to the specified significant decimal.

Example: Significant decimal of 0.1
91.74 will be 91.7 (Drop the 4 and leave the 7 as is)
91.75 will be 91.8 (Drop the 5, and round up the 7 to a 8)

NOTE: Each internal calculation used to arrive at a final combined result shall be calculated to at least one decimal place farther than the specified significant decimal.

Significant Decimals	
Specific Gravities (All)	0.001
Prime Coat Rate	0.01 gal/yd^2
Tack Coat Rate	0.01 gal/yd^2
Rate of Mix Spread	1 lbs/yd^2
Tons of Mix	1 Ton
% Compaction (Density)	0.1%
Random Density Sample Locations	1 L.F. (Length and Width)
Nuclear Target Density	0.1 lbs./ft^3

SECTION 10

ROADWAY INSPECTION AND TESTING OF ASPHALT PAVEMENTS

10.1 ROADWAY INSPECTION

10.1.1 General

Prior to beginning paving operations, the Resident Engineer and/or the DOT Roadway Technician must inspect the Contractor's equipment to assure that it meets all requirements of the Specifications and is in good working order. If the equipment meets Specifications and is in satisfactory operating condition, a statement shall be entered in the Technician's Daily Diary. If the equipment does not meet the Specifications, the Contractor should be advised accordingly and corrective actions taken before paving begins. The Technician should note in his daily diary on the first day of operation, and thereafter as needed, that this check has been made and that all equipment is in compliance with specifications, or if not, what measures are being taken to correct the deficiencies.

After paving begins on a contract, the DOT Roadway Technician is responsible to insure the Contractor is utilizing good construction practices in order to generate a satisfactory asphalt pavement. Article 105-10 authorizes the technician to inspect all or any part of the work. If the Roadway Technician finds the Contractor is not utilizing best paving practices, he/she should notify the Contractor's paving foreman and the Resident Engineer. The Technician is not authorized to alter or waive the requirements of the contract or to act as foreman for the Contractor; however, he/she does have the authority to reject work or materials until a final decision is made by the Engineer.

10.1.2 QC/QA Technicians Checklist for Roadway Operations

Prior to beginning production and placement of asphalt mixtures, the following checklist should be reviewed by project technicians, including both Contractor and Department Technicians. The checklist is taken from the Construction Manual and includes items related to preliminary planning, equipment specifications and requirements, preparation of the existing pavement or base, spreading, compaction, traffic control, sampling/testing and required reports.

1. GENERAL

a) Have the Engineer and Inspectors held a preliminary paving conference with the appropriate Contractor personnel and other involved parties? (See Section 9.4.2)
b) Has the continuity of operations been planned?
c) Has the number and type of rollers to be used been determined?
d) Has the width of spread and location of longitudinal joints been planned to coincide with lane markings, where possible and feasible?
e) Is it understood who is to issue and receive instructions?
f) Has placement of control strips and coring of density samples been coordinated?
g) Has method of handling traffic been established?
h) Is a Materials Transfer Vehicle required?

2. PAVER

a) Does the paver comply with Specifications?
b) Is the governor on the engine operating properly?
c) Are the slat feeders, the hopper gates, and spreader screws in good condition and adjustment?
d) Are the crawlers (power tracks) in good condition and adjusted properly?
e) If the paver has pneumatic tires, is the air pressure in accordance with manufacturer's specifications?
f) Is the screed heater working properly?
g) Are the reverse auger paddles in good condition?
h) Are auger extensions needed and installed?
i) Are the paver strike-off plates in place and correctly adjusted?
j) Are the surfaces of the screed plates true and in good condition?
k) Are screed cutoffs and/or extensions in accordance with specifications and properly adjusted?
l) Are mat thickness and crown controls in good condition and adjustment?
m) Are screed vibrators in good condition and adjustment and being used on all pavement courses?
n) Are the automatic screed controls operating properly, when required?
o) Is the mobile string line for the automatic grade controls of adequate length and operating properly, when required?

3. ROLLERS

a) Does the type, number and weight of rollers comply with Specifications?
b) Can each roller start, stop and reverse smoothly?
c) Are all steel wheels straight across and free from grooves or pits?
d) Are wheel bearings free from excessive wear?
e) Are scrapers and wetting pads in good condition?
f) Is the sprinkler system on each roller in good operating condition?

4. HAULING EQUIPMENT

a) Are truck beds smooth and free from holes and depressions?
b) Is there any leakage of gas or oil from trucks?
c) Are trucks equipped with adequate covers?
d) Do trucks and paver operate together without interference?
e) Is the method of coating of contact surfaces of truck beds agreed upon?
f) Are truck bodies being drained of excess release agent before being loaded?
g) Is there a hole provided for temperature check?

5. ASPHALT DISTRIBUTOR

a) Are the heaters and the pump in good working condition?
b) Does the distributor have a volume calibration chart certified by a private testing laboratory?
c) Are spray bar nozzles unclogged & set at proper angle for application of tack coat?
d) Is an adequate thermometer provided?
e) Is a hand held spray hose with nozzle provided to tack irregular areas?

6. MISCELLANEOUS TOOLS REQUIRED

a) Rakes, Shovels, Lutes, Etc.
b) Tool heating torch
c) Cleaning equipment
d) Hand tampers
e) Small mechanical vibrating compactors, when considerable areas require tamping
f) Blocks and shims for supporting the screed of the paver when beginning operations
g) Paper or timbers for construction of transverse joints at ends of runs
h) Joint cutting and painting (tacking) tools
i) Thin Lift Nuclear Density Gauge or Non-Nuclear Density Gauge (if density gauge control used)
j) 10 foot straightedge on hand for checking joints and other locations (see Section 610-12 of the Specifications)
k) 4 foot level for checking pavement crown or cross-slope
l) Infrared Thermometer
m) 6” Core Drill Bit – must be 6” (150mm) <u>inside diameter</u>
n) Depth Checking Device
o) Hearne Straightedge (when required by contract)
p) Inertial Profiler (when required by contract)

7. PREPARATION OF EXISTING PAVEMENT FOR OVERLAY

a) Has patching of all pot holes and other necessary patches been made?
b) Has all grass, dirt debris, etc. been properly removed from the pavement?
c) Have all vertical faces, which will come into contact with the asphalt mix, been cleaned and tacked with asphalt?
d) Has a uniform tack coat of correct quantity been applied?
e) Has stringline been placed for proper alignment?

8. PREPARATION OF BASE COURSES BEFORE APPLICATION OF ASPHALT PLANT MIX

a) Have all underlying base courses and/or subgrade been compacted to the required density?
b) Has base course been primed when required?
c) Has prime cured sufficiently and has excess prime been blotted to avoid pickup?
d) Has base been broomed to remove loose material if necessary?
e) Has stringline been placed for proper horizontal alignment of the pavement?

9. SPREADING

a) Is the mix of uniform texture?
b) Is the temperature of the mix uniform and according to requirements of Specifications and job mix formula?
c) Is the depth and rate in conformance with contract?
d) Is the alignment and cross-section according to typical section?
e) Are longitudinal and transverse joints being properly constructed and checked?
f) Is paver speed coordinated with plant production rate?

10. COMPACTION

a) Are the required number of rollers being used?
b) Are the rollers operating at the proper speed?
c) Is the proper rolling pattern being uniformly followed?
d) Is the mat being rolled at the proper temperature?
e) Are the joints and edges being rolled properly and checked?
f) Are transverse joints being properly constructed when necessary?
g) Is the required density being achieved?

11. HANDLING OF TRAFFIC

a) [See Project Special Provisions, Standard Specifications, and Roadway Standards.]
b) Is traffic being handled properly through project?
c) Are the signs of sufficient type and number?
d) Are there proper amount of flagmen to handle traffic where necessary?
e) Is Contractor's equipment being operated in a safe manner through project?

10.1.3 Required Information for Asphalt Weight Certificates

Upon delivery of asphalt to the roadway, the Contractor should immediately give the weight certificate to the DOT roadway technician performing the inspection. Upon receipt of the certificate, the roadway technician should make sure the ticket is legible and the following required information has been listed on the ticket correctly by the certified weighmaster at the plant:

1. The Department Contract Number/ WBS Number.
2. The date the ticket is issued.
3. The time the ticket is issued.
4. The type of material represented by the ticket.
5. The gross weight of the vehicle.
6. The tare weight of the vehicle.
7. The net weight of the material.
8. The appropriate Job Mix Formula # (JMF) for the asphalt plant mix.
9. The asphalt plant certification number where the material was produced.
10. The truck number transporting the material.
11. The name of the Contractor.
12. The stamp or number of the public weighmaster weighing the material.*
13. The signature or initials of the public weighmaster in ink or in electronic format.*

(*Computer-generated weightmaster's stamp & signature are acceptable as long as the system generating the tickets meets the latest NCDA&CS Standards Division requirements.)

After verifying that the above information has been furnished on the weigh ticket, the DOT roadway technician should then list the following information on the ticket:

1. Contract / WBS Number if different than that shown on the ticket.
2. Contract line item number by which the material will be paid.
3. Beginning station location where the material is being placed.
4. Lane or shoulder description where the material is being placed.
5. Time the material was placed.
6. The temperature of the mix when it is received.
7. Construction Technician's signature on first ticket for day and initials on subsequent tickets.
8. Quantity reduction for unused portion of material and reason for deduction.

10.1.4 Visual Inspection of the Mix (Plant and Roadway)

Close cooperation between the paving crew and the asphalt plant is essential in producing a high quality pavement on the roadway. A fast means of communication must be established between the paving operation and the asphalt plant so that any change in the mixture production process or the roadway operation can be made promptly. When possible, the roadway technician and the plant technician should frequently exchange visits. When the roadway technician is familiar with plant operations, he can easily determine if changes at the plant are necessary to improve the mix. The plant technician, on the other hand, by being familiar with the paving operation can better understand related roadway problems which might occur due to changes at the plant.

Every truckload of material should be observed as it arrives. Mistakes in batching, mixing, and temperature control can and do occur, and these errors may sometimes go unnoticed by the plant technician. Consequently, loads arriving at the spreader may be unsatisfactory, in which case, they should be rejected by either the Contractor or DOT technician. When the roadway technician rejects a load, he should record his action, with the reason for rejection, both on the ticket and in his diary so that the proper deduction can be made from the pay quantities. If appropriate, a sample should be obtained for laboratory analysis. A record should also be kept of the loads accepted and placed. These records should be checked daily, or more frequently, with those of the plant technician so that discrepancies do not exist when work is completed.

Although the mix is inspected at the plant, there are times when the plant technician may inadvertently overlook a defective load resulting from a plant malfunction. Some of these deficiencies can be readily noticed by a knowledgeable and alert roadway technician prior to or immediately after dumping. When the temperature is checked or the truck bed is raised, these deficiencies are usually readily apparent based on visual observation and knowledge of asphalt pavements. Some indications of hot-mix deficiencies that may require close inspection and possible corrective action are:

(1) Blue Smoke: Blue smoke rising from the mix in the truck or the spreader hopper may indicate an overheated batch. The temperature should be checked immediately.

(2) Stiff Appearance: Generally, a load that appears stiff or has peaked up in the truck body may be too cool to meet specifications. The temperature should be checked. If it is below the optimum placing temperature, but within the acceptable temperature range, immediate steps should be taken to correct the low temperature and decrease the possibility of having to waste loads of mix.

(3) Mix Slumped in Truck: Normally the material in the truck is in the shape of a dome. If a load lies flat or nearly flat, it may contain too much asphalt or excessive moisture. Close inspection should be made at once. Excess asphalt also may be detected under the screed as excessive shininess on the mat surface. A mix containing a large amount of coarse aggregate might be mistaken for an over-asphalted mix because of its shiny appearance. Such a mix, however, usually will not slump in the haul truck.

(4) Lean, Dull Appearance: A mix that contains too little asphalt can generally be detected immediately in the truck or in the spreader hopper by its lean (dry), granular appearance; improper coating of the aggregate, and lack of typical shiny black luster. Lack of sufficient asphalt in the mix can be detected on the road by its lean, brown, dull appearance on the surface and unsatisfactory compaction under the roller. Excess fine aggregate can cause a mix to have the same look as a mix with too little asphalt. Excess fines can be detected by inspecting the mix texture and by watching for shifting of the mix under the roller.

(5) Rising Steam: Excess moisture in the mix often appears as steam rising when it is dumped into the hopper of the paver. The hot-mix mat behind the paver may be bubbling and popping as if it were boiling. Excessive moisture causes the binder to expand, which in turn, may also cause the mix to appear and act as though it contains excessive asphalt.

(6) Segregation: Segregation of the aggregates in the mix may occur during paving because of improper handling or it may have happened at some point prior to the mix reaching the paver. In any case, corrective action should be taken immediately. There are many possible causes of segregation. The cause of the segregation should be corrected at its source. (See the "**Segregation Diagnostic Chart"** in the Appendix and **"Segregation of Mixes on the Roadway"** in this section of the manual for possible solutions).

(7) Contamination: Mixes can become contaminated by a number of foreign substances, including spilled gasoline, kerosene, oil, rags, paper, trash and dirt. The contamination can be removed if it is not too extensive; however, a load that has been thoroughly contaminated should be rejected.

Diesel fuel is NOT an approved Truck Release Agent and should NEVER be used. Excess diesel fuel that collects in the truck bottom can be absorbed by the mix. Diesel fuel damages the asphalt and causes it to ooze (bleed) to the surface, resulting in what is termed a "fat spot". Also, the excess diesel fuel will strip the asphalt from the mix with which it comes into contact. Asphalt contaminated with diesel fuel should be removed and replaced. Only non-petroleum/non-citrus based agents are allowed for spraying truck beds. The approved list of release agents is available through the Asphalt Laboratory.

10.1.5 Identifying Mat Problems, Causes and Cures

Roadway Technicians, including both Contractor and Department personnel, must be able to quickly identify problems in the finished pavement and determine possible causes and cures of problems. A table of these and other common pavement problems and their probable causes titled **"Mat Troubleshooting Guide"** can be found in the Appendix. In referring to the table, keep in mind that a given deficiency may have several possible causes. Sampling and testing is not the only means for analyzing a pavement problem. Problems can still occur on the Roadway even though asphalt test results are within NCDOT specifications. Contractor shall be placed on limited production as outlined in Section 10.2 for any mix that is obviously unacceptable. Any questionable mix shall be evaluated under Article 105-3 of the specifications.

10.1.6 Determination of Rate of Spread and Tonnage Required

NCDOT project plans and specifications normally specify that asphalt mixtures be placed at a certain rate in pounds per square yard; therefore, the rate of spread must be regularly checked by the Technician to determine that the specified amount is being placed. The running rate of spread may be obtained at intervals by using the running total pounds divided by the square yards upon which the material was placed. At the end of each day's operation, the Technician must also compute the actual rate of spread from his record of the loads accepted and used in the work and record this on his daily report. The rate of spread on mainline paving should be calculated and reported with separate calculations made for areas of extra thickness, irregular areas, intersections, etc. An example of a rate of spread calculation is shown below:

Example Calculation of Rate of Spread

585.0 tons of Type S 9.5B asphalt mix have been used to pave a mat 12 feet wide from Sta. 10+50 to 63+30 at approximately 1.5 inches in depth. What is the rate of spread in pounds per square yard?

$$\boxed{Rate\ of\ Spread\ =\ \frac{(No.\,Pounds\ Mix\ Used)}{(No.\,Square\ Yards\ Paved)}\ =\ \frac{Pounds}{Square\ Yard}}$$

For a Rectangular Area: $Length = Ending\ Station - Beginning\ Station = (63+30) - (10+50) = 5280\ LF$

$$Rate\ of\ Spread\ =\ \left[\frac{Tons\ of\ mix\ \times (2000\ lbs/ton)}{\left(\frac{Length\ (ft.) \times Width\ (ft.)}{9\ ft^2/yd^2}\right)}\right] = \left[\frac{585\ tons \times (2000\ lbs/ton)}{\left(\frac{5280\ ft.\ \times 12\ ft.}{9\ ft^2/yd^2}\right)}\right] =\ 166.2\ lbs/yd^2$$

Say: 166 lbs/yd²

(Note: Significant Decimal for Rate of Spread is 1 lbs/yd²)

[For Typical Rates of Spread, See Section 3.4]

Example Calculation of Tons of Mix Required

Quite frequently, the reverse of this calculation must be made when it is desired to know the number of tons of mix required to cover a given area at a specified rate of spread.

For example, the Contractor needs to know the number of tons of material he would need to order from the plant to cover a section of roadway 12 feet in width, from Sta. 0+00 to 28+00 with Type I 19.0C mix at a specified rate of 285 lbs. per sq. yd., at approximately 2.5 inches in depth.

$$\boxed{Ton\ of\ Mix\ Required\ =\ (No.\,of\ Square\ Yards\ to\ be\ Paved)\ \times\ (Rate\ of\ Spread)}$$

$$Tons\ of\ Mix\ Required = \left[\left(\frac{Length\ (ft.) \times Width\ (ft.)}{9ft^2/yd^2}\right)\ \times\ \frac{(Rate\ of\ Spread)}{(2000l\ bs/ton)}\right] = \left[\left(\frac{2800\ ft \times 12\ ft}{9ft^2/yd^2}\right)\ \times\ \left(\frac{285\ lbs/yd^2}{2000\ lbs/ton}\right)\right] =\ 532\ tons$$

Say 532 tons

(Note: Significant Decimal for Tons Required is nearest 1 ton)

Also, note that the depth is not used in the rate of spread or tonnage required calculations using the above methods. In addition, the actual width of spread being placed or to be placed must be used in field rate of spread or tonnage required calculations. The width used may vary from the typical section surface width due to: (1) lane width variations due to offsetting longitudinal joints; and (2) lower layers are wider than plan typical widths due to slope (normally 1 : 1).

10.1.7 Temperature of the Mix at Roadway

Mix temperature during laydown and compaction of the mat is critical if smoothness, texture and density are to be achieved. It is extremely important that the temperature be at the proper level and that it be uniform throughout the mix to achieve either and/or both of these objectives.

Trucks should be checked for the temperature requirements by measuring the temperature with a thermometer in the 3/8" – 5/8" hole in the side of the truck bed prior to dumping mix into the paver. When checked in the truck at the roadway, mix temperature must be within ± 25° F of the temperature specified on the JMF. If any check of the mix temperature is outside of the above range, **a minimum of 3 additional readings should be made in different points of the load. The 4 readings are then averaged and the average used as the temperature of that load**.

The mixing temperature at the asphalt plant will be established on the job mix formula and shall meet the requirements of Table 610-1:

TABLE 610-1 MIXING TEMPERATURE AT THE ASPHALT PLANT	
Binder Grade	**JMF Mix Temperature**
PG 58-28; PG 64-22	250 - 290° F
PG 70-22	275 - 305° F
PG 76-22	300 - 325° F

Note: Mixing and Compaction temperatures are based on the specified PG binder grade for each mix type in Table 610-3. When using RAP or RAS with a different binder than specified, use mixing and compaction temperatures based on the original binder grade for that mix type shown in Table 610-3.

In addition, mix temperature should be checked occasionally behind the paver or roller to determine if excessive heat loss has occurred. Mix temperature should also be checked whenever the mix appears to be cold or when the breakdown roller is falling behind. Mix compaction is most easily achieved and should be completed prior to mat temperature dropping below a temperature where the mix is still workable.

Mat temperature can be taken by inserting the stem of a dial thermometer into the uncompacted mat to the mid-point of the mat's thickness and compacting the mat against the stem by lightly tamping the mat surface, or by use of an infra-red thermometer. Asphalt mixtures cool very quickly when placed in windy conditions or on cold surfaces in cold weather. Also, thin lifts cool more rapidly than thick lifts. If paving must be done in cold weather, then there is an obvious advantage in placing the mix in thick lifts to gain additional time for the compaction process. (See Cessation Requirements, Table 9-2).

10.1.8 Segregation of Mixes on the Roadway

Segregation can occur in asphalt hot mixes in two forms, either aggregate segregation or temperature segregation. Both must be avoided if a high quality, dense, smooth, uniform surface texture mat is to be constructed. Take necessary precautions during production, loading of trucks, transportation, truck exchanges with paver, folding of the paver hopper wings, and conveying material in front of the screed to prevent segregation of the asphalt mixtures.

Aggregate segregation refers to a condition in hot-mix asphalt in which there is non-uniform distribution of the various aggregate sizes across the mat to the point where the mix no longer conforms with the specified job mix formula in gradation, asphalt content and mix properties. When segregation is present in a mixture, there is a concentration of coarse materials in some areas of the paved mat, while other areas contain a concentration of finer materials. The resulting pavement exhibits poor structural, textural, permeability, and smoothness characteristics, provides poor performance and durability, and has a shorter life expectancy and higher maintenance costs.

Temperature segregation refers to a condition in which the mix varies significantly in temperature across the mat to the point where some areas of the mat no longer comply with the temperature specification. When this happens, it detrimentally affects the smoothness and compaction of the mat. The cold areas will not compact properly, leading to

areas with high in-place voids and overall pavement roughness. These high void areas will be more permeable and therefore, more subject to water infiltration and significant loss of pavement life.

Problems associated with segregation of either type are serious. Segregation is one of the major causes of poor performance and roughness of pavements. Some of the causes, and therefore the cure, of both types of segregation are the same. Some are caused by poor production and paving practices. In any event, elimination is essential to the construction of high quality, smooth pavements. Elimination or minimization of segregation is the responsibility of everyone who is involved in the production and placement of HMA, including those who design the pavements and the mix, Department personnel, Contractor personnel, aggregate producers and suppliers, those who haul the mixes, and manufacturers who design and market asphalt mixing and paving equipment.

Segregation of either type can directly affect pavement durability by increasing the air void content of the mix in the segregated areas and increasing the potential for moisture damage. Further, the segregated locations are susceptible to raveling and, if bad enough, total disintegration under traffic. Segregation, in the form of coarse aggregate pockets, longitudinal streak segregation, side-to-side segregation, or end of load (truck exchange) segregation is detrimental to the long-term performance of the asphalt mixture. In addition, pavement roughness is almost always associated with either type segregation.

Coarse graded mixes, such as base & intermediate mixes, are naturally more prone to aggregate segregation due to their high coarse aggregate content, low binder content, and possibly due to gap-grading. Finer graded surface mixes do not tend to have as severe segregation problems for the opposite reasons of those noted with coarse graded mixes; however, they can and do frequently occur, especially in the area where the truck exchange occurs and poor paving practices are being utilized. Aggregate segregation can originate at virtually any point in the process of hot-mix asphalt production and placement. It can get its start in the mix design, in the aggregate stockpile, in the cold-feed bin, in the batch plant hot bin, in the drum mixer, in the drag-slat conveyor, or in the surge-storage bin. In some cases, segregation doesn't start until the truck is being loaded out; or even until the mix reaches the paver. The earlier in the hot mix process that segregation begins, the worse the problem tends to be due to more movement of the mix in completing the process. Whenever segregation does occur, all of these areas should be closely monitored for their extent of contribution to the problem. The paving operation should be placed on limited production status until the problem is resolved. See the "**Segregation Diagnostic Chart" and "Mat Problem Troubleshooting Guide"** in the Appendix.

The solution to segregation problems usually lies within several of these problem areas. Modifications in the mix design may be needed; improper handling of the aggregates may need to be addressed; modifications to the plant, drag-slat conveyor, and/or the surge-storage bin may be necessary; and the handling and movement of the mix through the surge-storage bin, into the truck, and on into the paver, may need to be altered. It's most important to remember that for whatever the reason and at whatever the location segregation begins, after it does, any unrestricted movement, especially down slope movement, will compound the problem drastically. Because of this, down slope movement of the mix should be kept to a minimum throughout the hot-mix asphalt process.

Two common mistakes often occur which greatly increases the likelihood of segregation of the mix on the roadway. The emptying of the paver hopper and/or the dumping of the paver hopper wings between truckloads of mix promotes both aggregate and temperature segregation. In fact, in most cases it causes segregation to be more likely to occur or to be worse. It is best to always maintain an adequate quantity of mix in the paver hopper, even between truckloads. Segregation problems are also substantially compounded if the paver hopper wings are dumped when the paver hopper is empty. This is because the material on the wings will most likely be the coarser stone from the mix.

10.1.9 Checking the Mat Cross-Slope and Thickness

Some form of slope gauge is required to check mat cross-slope. There are several methods of improvising slope checking devices. Boards cut with taper equal to a specific percent of slope, used with a level, will serve the purpose. The fact that a level is usually required with any cross-slope testing method suggests adapting a level for slope checking. An inexpensive 4-foot mason's level is adequate in length, and its length lends it well to providing adjustment for each one percent of slope. One percent of slope is equal to 1/8 inch of rise per foot. This equals 1/2 in. total rise in the length of the 4-foot level to be equivalent to 1 % slope.

A threaded rod with a one inch diameter disc welded to one end, inserted into a threaded hole in one end of the level with a locking nut to provide for adjusting is a good means to check the desired percent of slope. Provision for adjustment up to three inches of rise will make possible checking slope up to six percent. The thread tapped hole should be as near one end of the level as possible to provide close accuracy of slope checking.

As the paver spreads its first load of asphalt mix, the mat should frequently be "stabbed" or checked for thickness. After 20 to 30 ft. of operation, the paver should be stopped and the transverse joint and new surface checked for texture and smoothness using a 10 foot straightedge. The texture of the unrolled surface should be uniform. If it is not, screed adjustments may be necessary. The adjustment of the screed, tamping bars or vibrators, spreading screws,

hopper feed, and other adjustments should be checked frequently to assure uniform spreading of the mix to proper line and grade.

10.1.10 Surface Texture

The texture of the unrolled mat should appear uniformly dense, both transversely and longitudinally. If tearing or open texture appears only at the beginning of a day's run, it is probably caused by the screed not being heated sufficiently. If a tear appears under screed extensions, the alignment of the extension and the tamping bars and vibrators need to be checked. When the center portion of the mat behind the screed appears smooth but the edges are rough and open textured, the screed likely has too much lead crown. When the center portion of the mat behind the screed appears rough and open textured but the edges are smooth, the screed likely has too little lead crown. As a general rule of thumb the leading edge of the screed should have approximately 1/8 inch more crown than the trailing edge.

Tearing often occurs in a mix that is too cold, and which appears open and coarse. Tearing and scuffing will also result from improper setting of a paver equipped with a tamping bar in the screed unit. A mix containing excess moisture will not lay down properly and will have the appearance of an overly rich asphalted mix. In addition to possibly tearing, the mix will bubble and blister and remain tender for a longer period. When an inspection of the mat reveals obvious segregation or other surface texture problems the cause should be determined and corrected immediately. Possible causes and cures of segregation and surface texture problems can be found in the **"Mat Problem Troubleshooting Guide"** in the Appendix.

10.2 LIMITED PRODUCTION POLICY FOR UNSATISFACTORY LAYDOWN

Department personnel shall review the previous day's roadway paving operations with Contractor personnel. Any pavement mat problems resulting from unsatisfactory workmanship such as:

Segregation
Improper Joint Placement or Alignment
Non-Uniform Edge Alignment
Excessive Pavement Repairs
Excessive Tearing of the Mat
Poor Ride Quality
Equipment Malfunctions or Improper Equipment Setup/Maintenance
OR any deficiencies resulting from obvious poor workmanship shall be reviewed in accordance Article 610-12.

The roadway technician shall advise the Contractor that the work is unsatisfactory and that steps must be taken to obtain a satisfactory laydown. When directed due to unsatisfactory laydown or workmanship, the Contractor shall operate under the limited production procedures.

Limited production for unsatisfactory laydown is defined as being restricted to the production, placement, and compaction and final surface testing (if applicable) of a sufficient quantity of mix necessary to construct only 2500 feet of pavement at the laydown width. The Contractor shall remain on limited production until such time as satisfactory laydown results are obtained or until three consecutive 2500 foot sections have been attempted without achieving satisfactory laydown results. If the Contractor fails to achieve satisfactory laydown results after three consecutive 2500 foot sections have been attempted, cease production of that mix type until such time as the cause of the unsatisfactory laydown results can be determined.

The Contractor may elect to produce a different mix design of the same mix type but if so, must begin under limited production procedures. Once satisfactory laydown has been achieved normal production may resume. As an exception, the Engineer (QA Supervisor) may grant approval to produce a different mix design of the same mix type if the cause is related to mix problem(s) rather than laydown procedures limited production would then not be required.

Mix placed under the limited production procedures for unsatisfactory laydown or workmanship will be evaluated for acceptance in accordance with Article 105-3. If mix is removed due to unsatisfactory laydown, payment will be made for the actual quantities of materials required to replace the removed quantities, not to exceed the original amounts.

The Specifications require that the Contractor construct pavements using quality paving practices as detailed within this Manual. The Contractor should construct the pavement surface smooth and true to the plan grade and cross slope and immediately correct any defective areas with satisfactory material compacted to conform to the surrounding area. Pavement imperfections resulting from unsatisfactory workmanship such as segregation, improper longitudinal

joint placement or alignment, non-uniform edge alignment and excessive pavement repairs will be considered unsatisfactory and if allowed to remain in place will be accepted in accordance with Article 105-3.

The technician should refer to Section 7.4 when mix deficiencies occur or Section 10.9 when compaction deficiencies occur to determine if and when the Contractor should be placed on a "limited production" basis for either of those reasons.

10.3 PAVEMENT DENSITY QMS TESTING PROCEDURES – GENERAL

10.3.1 Density Testing Methods

The Contractor shall perform quality control (QC) of the compaction process in accordance with Article 609-7 of the Standard Specifications. The Contractor may elect to use either pavement core samples or density gauge readings as the method of density control. Non-Nuclear gauges (Troxler Pavetracker Plus Model 2701-B, TransTech PQI Model 301, and PQI Model 380) may also be used for acceptance on surface mixes only. Non-Nuclear gauges may be used to monitor density on base and binder mixes, but are not to be used for density acceptance. (25.0 and 19.0 mm mixes). Once a method has been chosen by the Contractor, he should continue to utilize that method throughout the duration of the contract. The Contractor should not be allowed to switch back and forth from one method to the other. The Contractor should provide at the preconstruction conference the method of density quality control to be used and name of the individual supervising QC density control procedures.

As stated above, the degree or amount of compaction obtained by rolling is determined by either obtaining cores from the pavement or testing with a density gauge (see Fig. 10-1). The density gauge readings are correlated with core densities by constructing control strips on a regular basis. Regardless of the method used, density test locations should be determined on a random basis. The density gauge procedures (*See Random Sampling in the NCDOT QMS Density Gauge Operator's Manual and example in Section 10.4.5*) outline the use of a random numbers table to determine test site locations when using density gauge control. A similar concept is utilized to determine core sample locations within the specified lay-down length. Refer to Section 10.7 for the core sample procedure.

Figure 10-1
Density Test Methods

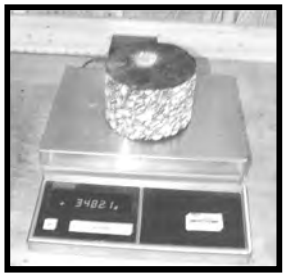

Roadway Core

Nuclear Gauge (Troxler 4640-B or 3450)

TransTech PQI 301 (Non-Nuclear)
(Density Acceptance for Surface Only)

Troxler Pavetracker Plus 2701-B
(Density Acceptance for Surface Only)

TransTech PQI 380 (Non-Nuclear)
(Density Acceptance for Surface Only)

10.3.2 Minimum Density Requirements

NCDOT Specifications require that all mixes be compacted to a minimum percentage of the maximum specific gravity (G_{mm}) as specified in Table 610-6 below. Density compliance for nuclear & non-nuclear gauge control will be as provided in the current edition of the Density Gauge Operators Manual. Density compliance for core samples will be determined by use of an average maximum specific gravity (G_{mm}) until a moving average of the last four maximum specific gravities is attained. Once a moving average is established for density control specific gravity, the last G_{mm} moving average in effect at the end of the same day's production will then be used to determine density compliance.

TABLE 610-6 SUPERPAVE DENSITY REQUIREMENTS	
Mix Type	**Minimum % G_{mm} (Maximum Specific Gravity)**
S 4.75A	85.0[(a)]
SF 9.5A	90.0
S9.5X, S12.5X, I19.0X, B25.0X	92.0

(a) Compaction to the above specified density will be required when the S 4.75 A mix is applied at a rate of 100 lbs/sy (55 kg/m^2)

10.3.3 Determination of "Lots"

The pavement will be accepted for density on a lot by lot basis in accordance with Article 610-14 of the Standard Specifications and Section 10.8. A lot will consist of one (1) day's production of a given job mix formula on the contract, except that separate lots will be established when one of the following occurs:

(1) Portions of the JMF are placed on a given day are placed in both "New" and "Other" construction categories as defined below. A lot will be established for the portion of the pavement in the "New" construction category and a separate lot for the portion of pavement in the "Other" construction category.
(2) Pavement is placed on multiple resurfacing maps, unless otherwise approved prior to paving.
(3) Pavement is being placed by multiple paving operations.
(4) Portions of the JMF are placed in different layers
(5) Control Strips that are placed during limited production

The Engineer will determine the final category and quantity of each lot for acceptance purposes.

The "**new**" construction category will be defined as pavements of uniform thickness, exclusive of irregular areas, meeting all three of the following criteria. All "new" construction pavement that fails to meet the specification density requirements will have an automatic price adjustment applied in accordance with the procedures in Section 10.8.

(1) Pavement placed on a new aggregate or soil base compacted to the specified density, or pavement placed on a new asphalt mix layer (excluding wedging and leveling); and
(2) Pavement which is within a designated travel lane which will be the final traffic pattern; and
(3) Pavement which is 4.0 feet or wider.

As an exception, when the first layer of mix is a surface course placed directly on an unprimed aggregate or soil base, the layer will be included in the "other" construction category.

The "**other**" construction category will include all pavement which does not meet all of the above "new" construction category. Pavement in the "other" construction category which fails to meet the minimum density specification requirements shall be accepted in accordance with Article 105-3 of the Specifications.

NOTE: See Section 10.8.2 for provisions concerning the Density Acceptance Process for Small Quantities. This small quantities acceptance process is for individual structure replacements and projects having 1,500 linear feet or less of roadway pavement. The pavement meeting the small quantities requirements will be included in the "Other" construction category.

Lot Determination

A Lot is defined as ONE DAY'S production of a given Job Mix Formula, except separate lots will be established for:

1. New Construction (on New Base or New Mix in final travel lane 4 ' (1.2m) or greater),
2. Other Construction (not meeting New requirements as described above),
3. Individual resurfacing maps or portion thereof,
4. Different layers of same job mix formula placed in the same day,
5. Separate paving operations (crews) will be separate lots, unless otherwise approved by the Engineer,
6. Control strips placed during limited production.

Figure 10-2

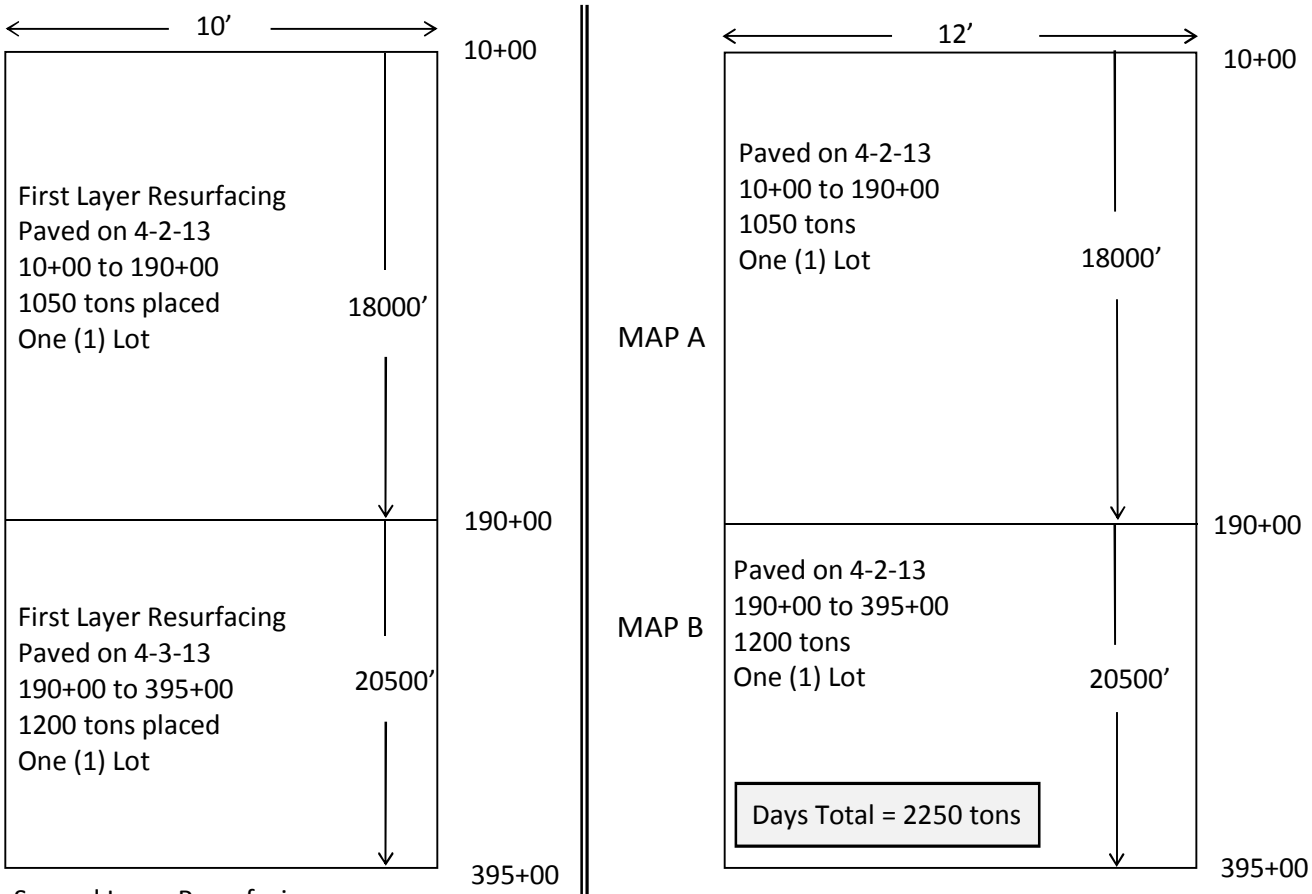

Second Layer Resurfacing
Paved on 4-3-13
10+00 to 395+00
2250 tons placed
One (1) Lot

3 Lots placed during
2 days of production

Two Maps = Two Lots

Lots do not normally cross map lines due to the possibility of different pavement structures and/or different contract specifications.

However, maps may be combined into one lot if agreed upon by the Engineer and the Contractor.

10.3.4 Density Control Sampling and Testing Frequencies

Whether utilizing core sample density control or density gauge control, the frequency of sampling and testing shall be based upon test sections within a lot consisting of 2000 linear feet or fraction thereof placed during a single paver pull width. Do not divide full test sections, consisting of 2000 linear feet, unless otherwise approved by the Engineer. As an exception, when a day's production is less than 6,000 linear feet of laydown width, the total length paved may be divided into 3 equal test sections, provided that density gauge testing has not already occurred or core sample locations established. If the fraction of a test section remaining at the end of a day is less than 100 linear feet, it is recommended that the density be represented by the results of the previous section provided approved compaction equipment and procedures are used. If the remaining fraction is 100 linear feet or more, it will be considered a separate test section and shall be sampled and tested accordingly. See Section 10.3.3 for "lot" definition and density acceptance.

When cored sample control is being utilized, the testing frequency shall consist of a minimum of one random 6 inch (150 mm) core sample taken from each test section, except that not less than three core samples shall be taken from each mix type and/or lot placed on a given day.

Note: Random core locations will be determined on the QC-5 form and shall be completed by either the contractor's certified roadway technician or certified density gauge operator.

When density gauge control is being utilized, the testing frequency shall consist of five random gauge readings (one random reading from each of five equally spaced increments) from each test section except that not less than 5 gauge readings shall be taken from each mix type and/or lot placed on a given day. When utilizing a non-nuclear gauge, the testing frequency shall consist of five randomly located test sites from each test section. Five individual gauge readings will be taken at each test site and the results will be averaged to determine the percent compaction. In addition, not less than one test section (25 non-nuclear gauge readings) shall be taken from any acceptance lot of a given surface mix.

Sample and test all pavements that meet the following criteria unless otherwise approved:

1. All full width travel lane pavements, including:
   a. Normal mainline and -Y- line travel lane pavements
   b. Turn lanes
   c. Collector lanes
   d. Ramps and Loops
   e. Temporary pavements
2. Pavement widening 4.0 feet or greater
3. Uniform width paved shoulders paved in the same operation as the travel lane. Uniform width paved shoulders greater than 4.0 feet paved as a separate operation from the travel lane.

The Contractor shall maintain minimum test frequencies as established in Section 10.3.3. Should the Contractor's density testing frequency fail to meet the minimum frequency as specified in Section 10.3.3, all mix without required density test representation shall be considered unsatisfactory and if allowed to remain in place, will be evaluated for acceptance in accordance with Article 105-3.

Sampling and testing will not be required for the following pavement provided it is compacted using acceptable equipment and procedures. Compaction with equipment other than conventional steel drum rollers may be necessary to achieve adequate compaction for the paving conditions listed below:

1. Pavement widening less than 4.0 feet.
2. Intersections and driveways paved as a separate operation and less than 100 feet.
3. Paving in irregular areas. Irregular areas are shapes such as tapers or bulb outs that may make them difficult to compact.
4. Paving for patching, wedging, or leveling.

TABLE 10-1
QMS Minimum Density Sampling Schedule

Core Control Method

Location	*Point at which Sample is taken*	*Minimum No. of Samples*	*Sampled By*	*Frequency of Test*	*Test*	*Test Performed By*
CONTROL STRIP (Limited Production)	5 Random Sample Locations within the Control Strip	5 - 6" (150mm) Core Samples	QC/QA Personnel	Core Sample Control Strip only required for limited production	Bulk Specific Gravity in accordance with (NCDOT-T-166) or (NCDOT-D-6752)	QC/QA Personnel
TEST SECTIONS	1 Sample located randomly within a Test Section	1 - 6" (150mm) Core Sample per test section w/ Min. 3 core samples per lot	QC/QA Personnel	1-6"(150mm) Core every 2000 L.F. of laydown width or fraction thereof per laydown width per day	Bulk Specific Gravity in accordance with (NCDOT-T-166) or (NCDOT-D-6752)	QC/QA Personnel

Nuclear / Non-Nuclear Control Method

Location	*Point at which Sample is taken*	*Minimum No. of Samples*	*Sampled By*	*Frequency of Test*	*Test*	*Test Performed By*
CONTROL STRIP	5 Random sample locations within the Control Strip	5 - 6" (150mm) Core Samples 10 Nuclear Gauge Readings (25 non-nuclear)	QC/QA Personnel	Beginning of each new JMF and bi-weekly (± 14 cal. days) thereafter or anytimemix or underlying surface changes may affect gauge readings	Density Gauge Readings with Core Samples Bulk Specific Gravity in accordance with (NCDOT-T-166) or (NCDOT-D-6752)	QC/QA Personnel
TEST SECTIONS	5 Random sample locations within a Test Section	5 Nuclear Gauge Readings (25 non-nuclear) per test section w/ min. of 5 Gauge Readings per lot	QC/QA Personnel	5 Random Nuclear Gauge Readings (25 non-nuclear) every 2000 L.F. or fraction thereof per laydown width per day	Density Gauge Readings to be averaged and used for acceptance of that Test Section.	QC/QA Personnel

10.3.5 Procedures for Placing and Obtaining Core Samples

Core samples are utilized in both nuclear and non-nuclear gauge and core sample density control. This section describes the general procedures for placing and obtaining cores for either method.

When cored samples are required by either density method, obtain cores from the full layer depth of the compacted pavement to be tested at random locations determined in accordance with procedures in the Department's HMA/QMS Manual. When full depth cores are taken, the Contractor is responsible for separating the layer of mix to be tested in a manner such that it is not damaged. The use of a separator medium, including a shovel of asphalt mix, beneath the layer to be tested is prohibited. Marking the core locations on the pavement should not be done until immediately before coring of the sample(s).

Pavement layers may be cooled by approved artificial methods to allow cutting the required core samples as quickly as possible. No additional compensation will be made for the costs of artificial cooling. All pavement specimens taken by the Contractor for density testing purposes shall be obtained utilizing a 6 inch (150 mm) core drill. The coring equipment shall be capable of taking a representative sample of the compacted pavement and shall be approved by the Engineer. In the event a malfunction of the coring equipment occurs, the Contractor may utilize a diamond or carborundum saw or other approved means to obtain the required samples. The coring equipment shall be repaired and restored to use within three working days.

Where samples have been taken, clean the inside surfaces of the sample hole, dry, properly apply tack coat, place and compact new mix of the same, or finer, type to conform with the surrounding area within one working day of the sample being taken. Use a circular tamp or other approved device to achieve compaction (A Marshall hammer works well for this). The samples must be handled with extreme care during the coring process, while being transported to the laboratory, and during the density determination process to assure the test results obtained are representative of the actual pavement density being obtained on the roadway. Many times, core samples are located, cored and handled in

such a careless manner that failing test results are imminent even though in actuality, the pavement may have the required density.

Once samples are cored, it then becomes the Contractor's responsibility to assure that samples are immediately transported to the QC field laboratory in a proper manner for density testing. In addition to being marked with the core number, the core sample should be marked with the date and mix type. The QMS Certified Roadway Technician should ensure that core samples are taken for all pavements placed, as required, on the beginning of the next production day, not to exceed 3 calendar days.

The Contractor's quality control density core samples shall be retained for 7 calendar days at the plant site or until disposal permission is granted by the quality assurance personnel, whichever occurs first. The Department's comparison quality assurance core samples shall be retained in a sealed container at the plant site until obtained by quality assurance personnel. All retained density samples shall be stored on a smooth, flat surface in a cool, dry protected location.

All QC core samples will be recorded on form QC-5 (Fig. 10-10). This form will be initiated by the contractor's certified density gauge or roadway technician. All QA cores will be recorded on form QA-5 (Fig. 10-13) which will be initiated by the certified DOT roadway technician **or certified density gauge operator**. Core samples along with either the QC-5 or QA-5 forms will then be taken to the appropriate QC or QA lab where the actual compaction results are determined and recorded. Core sample testing at the QC or QA Lab shall be performed by certified Level I or Level II plant technicians. QC core test results are to be forwarded to the appropriate QA Lab the same day. The QC-5 and/or QA-5 forms are then distributed to the appropriate personnel. (See Section 10.6.12 for distribution)

10.3.6 Determining Random Sample Locations

In random sampling, tables of random numbers are used to locate test sites to avoid bias (Refer to Table 10-2) and to assure that all pavement has an equal chance of being tested. Once a random number has been used, it should be marked through and not used again during that calendar year. If all of the random numbers have been exhausted, then the process should be repeated.

For density testing, random sampling determines the length and width for testing locations. First, a random station within a test section is determined and then a distance from the reference edge of pavement is determined. For example, if a density test location is required in every 2000 feet, then it should be randomly located longitudinally and randomly located from the reference edge of pavement within each 2000 foot test section.

The following are the basic procedures on how to determine random locations. Step-by-step instructions and a completed QC-5 (Fig. 10-10), M&T 515 QA & 516 QC forms (Figs. 10-6 & 10-7) are included in Section 10.4 & Section 10.5.

Note: The QC-5 form shall be completed by either the contractor's certified roadway technician or certified density gauge operator.

1. Determine the test section length, control strip length, or length in question and the number of sample locations required by referring to the appropriate procedures. Determine beginning station number of each test section.
2. Determine the random sample number by beginning in the upper left-hand corner of Table 10-2. The first two digits of the four-digit number will be used to determine the longitudinal test location and the second two digits to determine the transverse location.
3. Using the appropriate four digit random number that has been selected, place a decimal in front of the first two digits. Going down the column in the same manner, repeat this process using the next random sample number until the required number of locations has been determined.
4. Multiply each random sample number by the length of the test section determined in #1 above.
5. Add the distances determined in #4 to the beginning station number of each test section. This result will be the longitudinal test location within the test section.
6. Refer to the same random sample numbers from Table 10-2 used in #2 above. Using the appropriate four digit random number that has been selected, place a decimal in front of the second two digits. Going down the column in the same manner, repeat this process using the next random sample number until the required number of locations has been determined.
7. Multiply each random sample number determined in #6 above by the width of the test section. This result will be the transverse test location within the test section. This location will be from the predetermined baseline or reference line. No test site location should be located within one (1) foot of either edge of the test section.
8. Record the stations and distances from the reference line of each section on the appropriate form.
9. This random sampling procedure may be computed by either a certified QC roadway technician or a certified QC density gauge operator.

Table 10-2
(ASTM D3665)

	0	*1*	*2*	*3*	*4*	*5*	*6*	*7*	*8*	*9*
1	7175	0354	6881	9241	4298	2459	6903	4247	0859	8884
2	3297	5186	2232	0412	7311	3241	6427	1985	0823	1747
3	9507	0475	8798	1243	6201	6094	4875	4261	6943	0909
4	3509	5309	3752	0443	9464	3631	1895	1314	3219	9008
5	8931	7775	0722	8148	7968	2136	5981	0357	8695	3583
6	4589	0575	5749	0912	4623	4433	2802	9577	9802	6315
7	9328	2464	3449	1413	2135	7716	6394	0825	1547	1513
8	3664	9697	0642	0124	7525	4535	1429	4237	2792	7799
9	3920	3565	3009	2357	7694	3765	6558	7936	6517	5153
10	4544	4027	6948	7501	6013	1116	9565	7324	3767	7669
11	2349	3515	7219	0828	3738	2149	3071	3211	8742	2924
12	5332	8087	3582	8669	3544	1779	3649	8621	5244	7425
13	1938	4385	7426	6027	4984	9379	2937	8078	5095	4932
14	6785	0772	2535	2681	1630	7302	8999	6760	8713	6020
15	2648	2153	8466	9017	8624	3799	7773	2436	8365	9338
16	8192	3898	1576	1816	2915	0300	1185	6266	3137	9966
17	2630	8132	5068	2349	2474	2282	4373	0196	9591	2237
18	6414	2986	5157	6556	5253	7934	7343	7010	4353	9590
19	8368	3605	2016	5109	7020	3931	3072	5263	7890	4816
20	7705	5173	2210	0278	2556	3108	7437	6720	1597	4149
21	9171	7515	1715	1625	2674	2475	4485	9758	2256	3376
22	7553	8790	7470	1004	6507	4781	9561	5938	3088	1089
23	6169	1015	8812	0798	1236	8301	2122	6648	0187	4820
24	4899	4938	6689	1849	4877	9716	6295	5930	6580	6396
25	7302	2982	7948	9611	5722	2171	6152	4114	3512	6183
26	3687	0564	3742	1274	3840	0351	0998	6389	7710	6722
27	2952	1545	7929	0639	2475	0479	1580	3042	0507	0415
28	9413	3778	3175	4229	9112	1379	1840	5921	3015	4617
29	5834	1875	3336	3462	4956	7008	9169	1147	1518	3428
30	2598	3107	4601	3658	8510	0627	1790	2785	4820	2669
31	3520	4061	8588	0641	9712	3622	7021	3800	4687	1384
32	7302	4533	1734	4661	6125	9363	7124	1469	7282	5545
33	2570	6308	8932	9665	9273	2428	8665	6717	1576	3831
34	2178	4995	3469	3315	5787	8749	2103	6924	1912	5444
35	8812	9253	9521	9697	2771	6760	9298	2851	5497	9188
36	5166	2316	9126	9617	8587	3695	2792	2604	4811	4622
37	3487	9157	9444	5725	2750	8053	3694	8012	0895	2707
38	1010	8655	0758	7319	1946	5793	8103	6906	6639	1531
39	3427	7004	8258	4782	7696	1393	6958	6378	3205	5181
40	4237	9612	4781	2500	6317	6477	8262	5761	1707	6429
41	8754	7392	5149	2479	0580	2167	8417	0938	9101	8453
42	8324	2509	5450	1923	1870	0196	1599	0618	9364	1205
43	8919	4664	6021	0674	1557	2028	0324	2879	0092	7171
44	8488	9264	9887	8013	6100	2877	9330	1977	6517	0346
45	0198	6130	3404	4860	0703	8574	8494	8823	8756	0675
46	7584	5712	5368	8115	9305	1811	7106	3242	1418	3774
47	6731	8240	7507	9542	4254	9907	3889	6566	5546	0705
48	2925	0095	4736	4029	2442	2266	5407	4431	7336	4319
49	6326	2399	5721	5858	4917	3197	4947	0151	8551	5143
50	2981	4061	3933	1730	3660	3040	6118	0833	4928	3655

Table 10-2
(ASTM D3665)

	0	*1*	*2*	*3*	*4*	*5*	*6*	*7*	*8*	*9*
51	3950	0934	5396	3698	9763	5195	5462	8112	9784	5840
52	1302	5881	6327	3169	2974	0339	0143	8213	1513	7170
53	0961	7470	9680	9020	0817	6685	6005	4231	8886	6646
54	2650	8981	7450	3345	4154	3934	3365	7163	3015	7223
55	9126	5134	6304	5717	6712	4379	4220	6549	7357	4736
56	5926	5990	0572	0420	2512	4311	7017	0384	5625	9453
57	9948	4979	4997	2906	9718	4099	8832	0771	0015	5619
58	1363	4084	1245	7376	3117	7260	5629	8290	1847	6084
59	0481	3088	2956	8783	1049	6953	5050	9648	9184	9556
60	4776	5991	5915	3415	0864	5847	0286	6429	3107	9085
61	4844	7063	4679	3256	5838	0263	7832	5546	2822	0179
62	3423	3180	8112	4604	1253	4334	2621	2750	4555	8352
63	3268	6324	5199	2811	7774	0802	5007	7533	3759	1383
64	4273	6979	9427	0602	6515	2660	7886	4930	9353	2874
65	2513	1790	6843	7097	2085	6785	2027	5841	4986	3089
66	4521	9742	2304	8477	3857	3154	1913	4081	6017	3699
67	4582	1055	6718	0064	3562	7185	1719	1207	9765	4792
68	4558	9461	1030	6161	2894	7825	2764	7020	5555	4049
69	9395	6153	1959	2680	3236	8726	9713	8351	5835	9817
70	5159	0747	1643	9461	4101	9143	9864	7344	5058	0642
71	9317	3832	4663	1664	1013	3346	4900	1472	1404	3383
72	8544	4832	4262	4563	8846	0227	1703	1422	7906	3340
73	6281	0623	6280	1387	9876	5964	6332	9050	9912	0900
74	8127	2989	4923	4922	7702	4060	7073	2747	1203	3071
75	5451	3679	5103	3009	3450	3983	4720	7897	1451	6651
76	5421	0573	6479	4591	9026	3889	7864	7847	7460	4483
77	1934	4251	2090	8555	5852	4580	0873	1864	9581	1397
78	1325	8896	0021	4285	7811	7704	4765	0252	1390	5105
79	0119	9674	6542	8136	1066	9163	9076	3472	7927	3087
80	8146	5343	5395	3507	1684	3478	8264	8514	6385	6628
81	2814	5151	1078	3158	6498	2779	7628	4061	5543	2490
82	9183	9069	5205	8808	0958	1255	4440	7743	9592	1319
83	6156	8150	4959	8898	5599	1109	7235	9687	6796	6859
84	5645	2022	7878	7736	9153	0985	9508	8101	4253	7633
85	5334	3787	5144	5382	7088	4250	1612	8476	4692	5601
86	7399	8786	2734	5217	1767	5735	4185	1734	6948	8162
87	9326	6488	4228	9910	2022	8718	5197	2223	0824	1735
88	3546	2896	0715	3310	4190	1078	3798	5302	6383	6060
89	2811	2279	8835	3805	8247	6194	5335	4419	3921	6735
90	0234	1316	6553	1980	7538	3424	6827	2038	7710	3286
91	2530	7060	5581	1958	9801	7858	7300	7577	5535	1812
92	2185	5329	1573	4668	6955	3517	8062	0969	6450	6123
93	1451	8608	1329	1650	3604	0520	1465	3936	7582	3831
94	8134	9695	9486	1194	5876	3142	3973	8379	5783	4293
95	5571	1296	1215	2805	9985	7605	8208	0756	5323	0253
96	5026	7514	7563	6459	1539	5990	4569	8645	7254	0220
97	0846	1666	2502	0085	5949	2518	4642	0211	0216	3991
98	7515	7974	9605	0837	6125	2875	4899	1122	6294	1698
99	9087	3181	5967	1424	6191	0368	7811	8552	3463	8114
100	5733	5786	2833	8822	1000	3111	8451	0094	6726	8555

Table 10-2
(ASTM D3665)

	0	*1*	*2*	*3*	*4*	*5*	*6*	*7*	*8*	*9*
101	6291	3256	8107	8153	2324	3351	8414	0509	8429	1852
102	0171	9261	1606	3025	9335	2534	7363	3785	0256	3173
103	4346	0002	7126	8869	3634	4529	9820	0774	3609	1603
104	5998	7793	3109	8092	9346	4025	9807	3514	4494	0860
105	9290	6261	6645	9908	9961	7043	8758	8719	6950	2753
106	0860	3205	1730	6170	7812	4575	0719	1346	0190	5422
107	2243	8142	0531	0536	0639	5022	2487	3999	9135	2889
108	0828	6830	1121	0605	0119	9943	1745	9586	0306	0198
109	1177	5378	7327	4268	7631	7136	9385	8690	1766	0206
110	2079	1780	7666	7622	2477	9710	1020	0824	6715	8006
111	6266	6505	0773	2110	1891	7323	7163	9188	1288	9195
112	9605	2090	1904	8404	5485	8911	3829	5934	6470	7123
113	6907	1568	8057	1486	8810	3825	5403	1014	9924	9616
114	9788	6972	0503	6447	7605	9325	0359	5821	4416	6547
115	7214	9547	2506	5588	3434	6145	4430	3356	9148	9700
116	8560	3082	0637	9155	8365	3607	0590	3844	0139	4164
117	0640	3996	0174	7531	8215	4227	7445	9616	6555	2558
118	4207	9670	3411	1749	6105	3852	1979	4702	3228	7619
119	8055	0335	9430	9996	4414	1140	0490	2734	1901	2624
120	0637	0854	8569	7531	3624	2110	8308	2344	3948	3973
121	8177	8790	0790	1777	6516	7213	9017	6734	1366	7953
122	8925	6749	1742	5900	6020	8250	7991	9412	8133	6970
123	5538	2032	0617	2998	3933	5339	9742	6551	8833	4696
124	2572	1351	4110	0181	3268	8074	3995	8306	4540	0530
125	7730	1001	2848	8579	4858	1411	6288	8539	7480	2992
126	4026	3629	4885	5560	4207	5659	9797	9061	2276	0952
127	1665	8400	4632	0377	8019	4050	4068	6787	9415	9039
128	4664	4965	9333	0813	6940	5349	9564	2225	3966	8116
129	1569	8048	2689	4208	8859	6311	7378	2852	1351	8140
130	8481	2742	5886	9650	8625	7130	3554	2804	1504	8316
131	7247	7421	8512	9944	3054	2486	0545	4527	6137	5162
132	9046	3005	5717	3678	2493	1020	2950	7054	6136	7455
133	0538	9838	6493	2276	3182	2179	5258	1443	9012	2599
134	2441	4900	7691	2407	0501	3350	4974	8863	5962	7257
135	2833	4205	9755	7611	4988	0582	5909	2634	0527	1617
136	9163	1710	6519	2276	8299	7710	6673	2065	8520	9541
137	4066	4989	4679	5079	1280	9429	8178	7892	9722	4767
138	7064	9499	9205	0577	3330	6131	8715	4205	7331	1019
139	4755	6244	3277	9627	5543	4938	9942	8023	3751	7841
140	7444	8528	3973	8386	4439	9499	8910	7654	5919	1487
141	9605	5164	3250	6864	8704	9560	0301	7713	0071	1048
142	7098	9426	0623	2537	7421	5010	0784	3291	3240	3688
143	3581	3290	4000	3357	5574	2512	5303	0383	2143	2478
144	8446	7458	3479	4753	4413	5428	3580	4583	6577	1344
145	9531	0303	0100	9905	4886	5723	0035	4329	6488	1693
146	2958	2216	1977	5933	9922	6142	6628	2938	2091	4239
147	3868	4879	0761	9505	4170	9553	7980	9618	4138	9816
148	9737	0166	4933	4417	4140	1928	4663	2618	5220	7063
149	6186	3770	5889	2357	0209	7105	0418	9846	1662	3236
150	0824	0406	6066	3971	1919	8734	7576	5337	6195	7224

Table 10-2
(ASTM D3665)

	0	*1*	*2*	*3*	*4*	*5*	*6*	*7*	*8*	*9*
151	3453	4208	9359	7379	1114	0803	4572	0319	9863	5573
152	7882	7618	0395	2106	6524	0911	2206	9732	3969	4520
153	9198	8983	9324	6418	4740	2105	5196	4735	6582	3306
154	2436	1171	0963	4465	1907	8810	5609	9751	4877	2084
155	2781	4088	3954	6963	0263	9971	9788	3449	0700	7518
156	4407	3172	8000	7265	3419	3681	4949	3517	2016	3767
157	2371	2942	8123	1186	9256	1356	4316	9718	8357	1888
158	2017	3293	5784	4617	6892	0398	0040	4667	9238	4477
159	4751	3134	4941	0468	9526	6556	9572	2762	0226	4285
160	2453	9088	7397	8710	7155	3241	5155	6717	1375	3812
161	8619	8869	1785	3465	3043	0561	8870	4694	4558	3823
162	2794	0458	9146	8540	2586	1120	9714	3819	8761	4308
163	4522	8981	3670	5018	9826	5113	9843	0372	7628	2724
164	6928	2915	5439	5265	3921	5301	9678	2595	8368	0796
165	3024	9585	6554	6420	3207	4734	1552	6174	8446	7709
166	4849	3133	3410	4799	6650	8078	6387	8333	8873	9098
167	5844	9639	2274	5398	9871	4126	8767	7851	2213	9486
168	2384	4511	6793	0057	5132	2166	8028	8721	8888	0875
169	1351	5630	5792	7597	5124	2418	1819	6402	4026	0177
170	9656	1943	1099	6085	3527	1252	5140	2346	5243	7835
171	9611	5908	2196	1479	6838	6617	1213	6016	0586	8835
172	8328	6859	2594	2200	9315	6971	1774	2241	3600	5814
173	9146	6073	2548	4296	3575	8171	7175	0946	5027	6391
174	4898	2030	3306	5309	6616	7798	4342	9752	5585	1584
175	2660	7664	5936	2003	9320	9533	2658	9092	4190	0389
176	1193	0307	6739	5248	9620	5647	2985	4529	2472	0779
177	8738	5607	3526	2372	3534	0654	3549	8962	5403	1486
178	9065	5539	2361	3081	4402	5022	3685	7693	2739	4083
179	4037	9331	1512	3011	7532	7266	6911	1919	0193	4515
180	5366	0485	3216	5724	5796	5795	6364	1607	7052	9275
181	3785	8018	3346	0454	5656	0655	9631	1677	2339	7908
182	3749	1969	5036	8999	7603	6942	5952	2580	7006	9326
183	4510	4286	7707	3997	5444	8209	6290	4185	6723	8311
184	7230	9141	6762	0083	7689	7556	5806	7935	8181	5929
185	8439	2022	2218	9599	3327	1811	9248	9806	2188	1225
186	7183	3749	6733	5180	6394	2878	5862	3797	2672	2972
187	2643	8955	3361	0078	4952	4392	0366	5178	6339	1131
188	5596	9330	4667	9646	1603	4321	0374	7855	7718	2094
189	1267	3494	1995	6522	3249	2830	4545	0116	8524	6236
190	3109	8049	4574	9067	1126	8560	6506	9135	5786	3755
191	2140	8605	8778	2375	1696	0659	1647	3185	7199	1580
192	2757	6045	8290	8174	9339	6347	9347	7009	9297	6119
193	0647	6062	7421	3934	3356	4073	1813	7440	1382	4438
194	5957	8963	9993	4289	3020	5650	5696	9072	6191	4769
195	9927	9387	8577	4841	3912	9903	0809	4221	5715	3691
196	3366	2281	6407	4204	5807	0124	2772	3273	4355	2657
197	7535	5347	8824	7191	0824	5578	1798	9498	3468	5472
198	9352	3433	4938	4395	9240	0554	7494	4390	1705	4053
199	7392	5535	9832	3680	1640	4902	2089	7677	0154	9170
200	4675	5272	8348	5467	8591	9799	5902	4359	7715	4204

Table 10-2
(ASTM D3665)

	0	*1*	*2*	*3*	*4*	*5*	*6*	*7*	*8*	*9*
201	7788	2532	4914	9431	9173	3311	8485	6839	8516	3160
202	7196	0904	1188	9699	6472	2521	0857	9777	6339	6596
203	6151	8320	9387	4207	8493	4900	2565	3593	1553	7711
204	9846	0370	5408	6532	2396	4785	3691	2919	3316	1444
205	8599	6894	6654	9791	2117	2906	7920	2116	0301	3143
206	2379	9218	5924	1879	0606	9250	1646	3473	9764	0967
207	0862	6768	7003	0718	6011	3648	7904	1755	0868	7967
208	1907	2264	3020	4922	4913	2969	4332	6964	1953	6657
209	2285	1829	3385	5984	3077	3729	6186	1532	4793	8935
210	2596	8065	7869	9096	7466	4770	9940	3453	3531	4126
211	1265	5621	0238	3825	5367	0421	4723	1378	7354	4961
212	4566	9404	8402	9418	4782	9699	4476	5155	0177	4848
213	1191	4673	3020	5791	0346	1731	8115	2110	4553	9121
214	4439	4883	7079	9380	9037	2688	7417	1178	5224	9907
215	5650	1366	2591	9650	5088	1788	8135	7825	1838	9311
216	2659	9184	5842	5642	3140	7618	3170	9158	1891	8257
217	8087	4495	7208	8444	5630	0716	9234	9222	3430	2192
218	6817	1554	2883	4658	0924	9955	4999	7839	4265	2164
219	6111	3171	2159	1708	8036	5781	2920	1247	1660	6593
220	0904	4258	8769	1801	2602	9669	9594	7970	9394	7562
221	2655	3028	6668	4442	9335	0690	8139	8469	3794	6784
222	2009	4766	2672	2988	0320	6836	5451	0291	6815	2199
223	8195	1960	0917	0071	4396	6756	4071	6877	8676	5925
224	2768	2717	2947	0723	1431	9568	1732	0795	5544	6158
225	6490	9551	3836	3000	2390	6254	7957	0383	8363	0297
226	2978	8992	5799	6226	4860	5321	8472	9074	9533	5204
227	1467	4239	8490	7436	5261	5838	2499	0640	8471	1908
228	9187	4383	8885	1204	2043	2129	4395	2084	1507	5776
229	3948	2602	9169	9689	4443	7544	1790	0702	2553	3981
230	7684	4886	7014	7494	3941	6017	4159	2192	0288	2977
231	8050	1571	9491	4246	0546	4339	2016	8939	4710	5835
232	4625	4365	9429	7764	4694	2292	0713	3465	3103	1904
233	9806	6469	3468	4553	4745	9686	1504	4075	1428	1621
234	9746	1349	6871	8673	1176	8429	0349	7584	7854	4912
235	7720	9078	9212	6680	1326	7191	1198	6344	6586	8824
236	6148	7786	5997	3789	8770	9899	9693	2256	2645	7821
237	0825	4952	4052	0110	0179	9706	2386	6523	7286	3504
238	2231	6153	5389	7016	4538	3146	8205	7385	7506	7819
239	9460	4125	1015	7232	1596	1646	8502	3902	7723	6304
240	8232	9236	7815	7390	4330	6745	3976	1526	3806	9749
241	4090	4561	2335	8218	7295	1011	8025	2387	4597	0920
242	1661	3343	2192	1067	7564	8770	4661	5816	4199	4047
243	5329	9494	9558	1787	5104	9196	4005	7731	4036	9489
244	6806	8141	3641	6036	2541	5695	2970	8935	9576	7466
245	7765	5507	7075	7286	9417	5669	1483	6522	7815	4442
246	0221	0920	1962	4389	7114	1447	7561	5305	4768	5965
247	3416	9807	5413	2704	6473	5690	0485	2108	5924	9449
248	3848	1023	2980	9346	6133	6899	6204	5028	2817	6709
249	8833	7260	7196	3494	0506	7831	0060	3263	6688	5392
250	2105	7516	3481	5957	7267	3118	0341	8325	0384	9825

Table 10-2
(ASTM D3665)

	0	*1*	*2*	*3*	*4*	*5*	*6*	*7*	*8*	*9*
251	9897	0935	6736	0019	2964	1287	6548	9906	9801	0141
252	3750	1540	0388	0004	4082	8070	3312	8374	3756	1226
253	7437	2960	0350	6903	9361	3136	0099	4724	1140	0269
254	4803	3693	7306	4592	9575	9038	2298	1720	4951	4260
255	7333	0290	5788	0675	2995	5265	1997	5646	6747	8621
256	7988	6024	6974	9184	3237	4371	4128	2102	3001	8928
257	8569	6913	9398	9555	5320	6718	8011	7064	6702	7632
258	7841	6364	3357	9078	5144	0467	8848	6408	2831	2688
259	0376	8478	8763	9872	4555	9265	0869	8423	5322	1466
260	3151	4002	0783	3067	5416	8483	7208	3036	5242	1331
261	7386	2879	4082	1892	8833	0423	2329	2340	4097	9228
262	8472	2907	9879	2885	6404	3091	7942	8036	5189	9324
263	3281	1805	5775	0381	8449	8217	8198	3548	0340	4477
264	7195	8950	4989	5863	8339	7935	9033	8169	7611	7174
265	7654	3323	4194	0332	7502	6751	3272	7649	0753	5095
266	9825	9780	5947	5004	4949	0245	9021	0545	5520	7046
267	9846	3835	2835	7512	3617	6756	1339	9726	9942	4613
268	1434	5848	6131	0418	3462	2134	9374	0446	7489	4558
269	3944	5408	7836	9480	2500	5042	6248	7481	0413	5004
270	4374	0865	9523	8582	0878	4173	0942	9845	1649	1519
271	7014	6724	0217	3420	3133	0955	7323	6885	9667	0137
272	3244	7065	2106	1801	7864	2871	9173	4461	4241	0913
273	3703	9798	5006	3756	0482	1915	9592	8429	2296	8878
274	4264	6658	4469	6799	7917	3415	2980	9968	6902	1537
275	8472	4267	3667	2307	9233	4394	1976	6948	5502	2583
276	9292	1778	8261	8604	2746	6796	8120	1735	1661	3714
277	9605	5030	3150	7845	3063	8107	5640	6258	3432	3236
278	9633	3818	8920	4036	1038	8365	3963	3881	0294	9170
279	9229	2639	3297	7515	2576	6648	0670	3550	2973	1588
280	2294	4476	7776	8834	8485	4441	7585	4415	7633	3234
281	9887	2264	4965	5114	4727	7627	1908	2599	5261	8688
282	1637	3603	7717	5980	6318	7147	8212	9498	3947	5631
283	2737	2644	7397	0337	2092	2732	7972	8388	4023	4126
284	3910	2495	7795	9299	3178	5066	1127	8788	9692	3361
285	5747	1770	7693	4576	6400	6273	8312	3520	9574	4438
286	2801	6071	0567	4384	9707	8278	9990	2390	4074	9414
287	5831	8157	5777	4363	4331	8775	7828	5372	3732	1717
288	6494	4333	2961	8812	5211	0202	9010	4633	5749	9924
289	2508	0036	4400	1316	9472	9498	1179	4268	7166	8740
290	3884	6056	7043	7297	6120	9566	3887	5989	4202	9062
291	4009	9641	0081	3180	7384	2554	9540	8015	3474	9197
292	7820	1846	0017	3664	4364	6912	1855	5329	4746	0358
293	4342	1738	9892	1761	5173	3782	2944	1781	1699	3704
294	1649	0102	0857	1668	8594	6183	4331	1024	4325	6628
295	5705	6140	0398	1558	5039	3233	1847	8451	0442	0752
296	3586	4143	8774	4026	8372	0568	4639	7887	2211	3220
297	4668	1476	7663	6048	7289	1920	2596	6196	8010	7787
298	6887	2651	9150	3611	7907	8496	2313	5711	6187	1898
299	7520	0042	0925	6740	6931	4103	2400	9717	8240	4685
300	0548	0611	4578	9013	4221	6544	8353	2023	5789	5916

Table 10-2
(ASTM D3665)

	0	*1*	*2*	*3*	*4*	*5*	*6*	*7*	*8*	*9*
301	9699	0596	7235	8611	9254	8944	7501	9034	9974	0316
302	4567	4386	1558	6059	5751	3929	9343	9400	2200	8324
303	6481	0772	8735	8130	4613	2927	1069	1223	4415	2094
304	7138	1939	4747	1967	9162	7500	2862	1106	4721	4708
305	5037	8376	4503	8860	1854	6354	1758	0886	2359	1067
306	7222	7448	2554	5363	6401	1653	5603	0895	4334	5019
307	7928	0579	7132	1967	4497	0750	9004	1902	3880	0137
308	2501	4814	7366	8473	1743	7496	3304	1720	5323	9934
309	0353	7101	3363	2961	6557	3242	8329	0906	7056	2449
310	1923	3737	0429	6674	9610	6725	2555	4392	9220	2870
311	9762	7659	9313	9289	5552	1397	5460	0403	3876	3970
312	2103	1784	1404	2023	0188	8420	0596	1896	1426	3593
313	0645	1935	8447	8968	3059	3460	2250	7250	1709	2043
314	9487	0158	5810	9084	0329	7478	6671	2191	2568	0779
315	1836	1891	1949	5996	2015	4670	3036	9013	2887	4818
316	5999	6342	4780	6314	1053	2144	2764	8893	3793	0309
317	5964	5621	6140	5710	6470	5916	2970	8322	5497	7896
318	1499	9218	9726	0655	0440	8686	6622	9203	2139	8009
319	8667	2360	3254	8932	5420	8696	8894	0166	2860	9730
320	4048	9866	7536	8720	9215	6266	8936	1922	4826	4092
321	1693	1079	3590	0024	0114	4090	9168	1733	9749	3779
322	8127	3408	5793	2630	7158	8698	2199	5801	1329	6248
323	0787	3333	4537	1258	6423	0641	8298	6195	0991	6787
324	8406	6095	5461	1303	7978	3747	8587	0194	2887	8879
325	1172	3909	1995	1069	8422	5104	7963	2249	5451	3703
326	7448	4643	8921	8190	9708	2699	4349	5595	5945	2199
327	2870	1472	1229	5013	4407	7346	7567	6637	1392	2602
328	5454	7853	1927	3639	9490	6250	7504	0346	7717	3690
329	5737	2348	3572	8431	5596	5605	5694	9861	5188	7246
330	4792	0858	6025	1204	5693	7714	0471	0203	7257	6646
331	6652	6147	6787	2922	1662	2003	8746	1234	0805	4615
332	6881	2124	9087	3035	3103	7060	2129	6687	4019	9688
333	4200	6412	1396	8841	1125	7789	6001	7760	2210	6638
334	0523	0739	2765	9191	9435	4775	1852	2525	0259	6589
335	4360	8115	1207	3827	6679	1315	4724	5862	8925	4198
336	0089	0091	1596	4230	1515	7120	7068	3151	1620	2582
337	4691	7377	3291	6155	8275	0767	2820	0352	0340	6691
338	2638	0891	3142	1781	3220	2359	6752	1889	0177	2045
339	2157	9832	4932	0321	4970	1272	5250	8047	5728	2979
340	9247	8862	8821	5979	8305	1067	9442	4349	7840	4062
341	0462	9990	7761	2447	1966	1464	1615	4956	6463	1209
342	7835	1203	2656	1660	9772	1912	0305	9259	1587	3622
343	0976	0221	3335	5716	7439	5433	4914	2638	9309	6695
344	6595	9912	7997	1656	7864	0478	8208	7433	1340	8366
345	8287	6803	1539	2603	1807	8417	9481	2311	5338	8568
346	3257	3207	0587	9999	2797	0623	8652	7836	3005	8695
347	1449	9547	5796	3804	6496	2488	5549	2644	0235	0581
348	4204	7136	5918	4904	1120	4509	3447	3333	3411	0773
349	0848	8999	5787	4051	6874	0424	0996	3254	9514	2133
350	2933	6088	7031	4529	0782	5309	4125	8730	5889	2909

Table 10-2
(ASTM D3665)

	0	*1*	*2*	*3*	*4*	*5*	*6*	*7*	*8*	*9*
351	5481	3182	3316	4215	3659	3624	5679	0798	8507	0174
352	4733	0121	1105	1370	7759	1082	0359	0231	3732	4985
353	2403	4778	0246	0342	0167	1621	3224	8759	5697	6637
354	3607	7778	2737	6161	0672	5404	4992	5302	4636	7409
355	9372	7011	6796	7258	3825	6449	6009	4479	7509	7150
356	0380	2674	7608	6708	9324	3011	9459	4176	0377	8201
357	8052	4690	0600	9081	0373	3136	4086	5799	1695	0267
358	8237	2883	5691	6642	8507	1113	8781	3249	7613	0400
359	5223	8005	2642	1562	5060	4831	1779	4867	1911	5739
360	5046	3792	8352	8604	9091	3182	6942	7510	0019	9041
361	9018	1382	9421	2620	2909	8069	7601	7784	2133	8681
362	4671	7752	6786	4650	9389	0803	2552	2098	5727	8713
363	0546	4283	0694	2852	5109	0127	6555	2090	7404	0301
364	6916	5422	9624	1315	8311	0931	5410	0813	2495	5623
365	0228	3882	8244	9808	5229	0839	9414	6099	5330	1682
366	9790	1851	6832	3895	2449	6205	4799	8792	7838	9659
367	6450	0614	1196	7415	6436	7638	8847	2657	4539	9569
368	2593	7612	0424	3245	4277	1553	0756	6773	5522	5138
369	7393	5100	9944	1752	8448	4186	4924	0318	3627	1798
370	9837	4382	5737	0538	2297	9147	4588	6484	1513	6622
371	4739	5499	5888	8807	0952	4242	6279	6604	4057	9915
372	5616	4418	1349	7819	4960	9676	5801	1589	2547	1186
373	9884	7867	7664	2802	7577	5302	7573	4746	9647	3775
374	1318	4532	3940	9406	2088	9018	3387	9886	6646	4988
375	0663	1253	2220	5795	8169	8085	3426	9328	0898	4304
376	6454	2017	3572	6844	1470	9663	5356	0409	9635	3286
377	8731	0933	5379	5938	8918	3434	5728	7395	4799	7649
378	7761	8403	8602	6601	7615	5734	4765	1998	8707	3714
379	2049	1822	7009	8480	4448	4074	9648	9192	7981	8194
380	2291	0329	8668	5324	8651	4789	6640	6420	3002	3059
381	2176	2180	6371	6935	0340	9969	0041	0620	0808	6666
382	5137	5170	4220	0730	7883	8824	9118	6643	4500	9072
383	4650	7518	7693	2243	9599	0767	4465	6788	7041	6785
384	3163	5744	1596	0234	6931	3199	8014	3082	6855	6159
385	4198	0760	3804	6095	6721	0218	7971	8973	4670	7015
386	6084	6816	6207	6127	1049	4023	9874	3768	4254	0995
387	0056	4515	2220	3467	1655	1211	5026	0735	9661	2503
388	2848	9757	6525	3921	4169	1084	1301	5297	8600	2969
389	9084	7554	1952	7844	7811	9973	9598	4693	0652	4268
390	7865	6082	8028	7627	5394	3366	4185	8741	7859	2095
391	2050	3067	2814	7799	2019	4693	4689	0427	2723	7868
392	0076	8731	0152	8035	0388	0870	7430	9372	9513	6030
393	3633	6017	3886	8315	8728	8831	4403	4164	6019	2519
394	9926	7801	0300	7721	6901	3133	7965	3529	9680	6809
395	5784	0076	2833	4277	5845	3792	2308	8515	6513	1417
396	5125	2005	6938	6034	4668	4208	7989	8980	3064	7102
397	6607	0630	7423	0179	0336	5029	4824	8543	4650	2042
398	1017	9846	0343	3989	6915	7732	7732	6653	4516	5766
399	8278	7928	5394	4907	0173	1321	1700	1766	2907	3735
400	3943	7059	0577	8733	3309	3330	6361	3198	5562	5434

Table 10-2
(ASTM D3665)

	0	*1*	*2*	*3*	*4*	*5*	*6*	*7*	*8*	*9*
401	5774	2301	5683	6774	1546	2128	4626	4743	8010	6378
402	3589	3384	9609	1225	9110	8273	0974	8096	2315	6083
403	5158	1634	2480	2474	5743	8503	5709	6816	3671	4347
404	2919	3365	6432	3991	5116	0243	4901	5893	9828	0120
405	7833	2398	6653	2314	1445	8179	9615	0272	0769	3779
406	6405	6230	6035	2892	6038	7570	9676	1827	5949	3937
407	9172	0362	6861	8553	5046	7856	8456	7588	7038	1306
408	9549	3690	4411	6617	8529	9456	0287	0693	2340	2147
409	3504	5847	8472	4067	6079	8773	3866	6972	7132	2367
410	1882	7034	3283	6759	7807	0243	0691	0462	7376	4732
411	6916	1701	5055	2351	8860	5290	8881	8250	5304	1914
412	4627	8816	9442	5168	4411	0422	8426	0455	1415	5141
413	2112	2690	2704	9335	6772	9099	0320	8599	1944	3650
414	7238	9955	9464	2091	9841	0577	7617	4448	6488	9903
415	9473	6767	9276	5992	0837	2095	9864	0016	8209	0437
416	9466	6265	6171	2256	4216	9188	3966	2843	3906	7348
417	9345	4757	6813	6216	9195	8276	5625	7558	7901	6648
418	0458	8250	2897	3668	5285	6161	3162	8688	1744	2564
419	2584	8757	3901	5068	7192	2883	1166	9995	5689	1512
420	1087	4370	6126	5869	6839	2617	2109	1263	0837	3069
421	5703	8673	6954	3855	4442	1090	9880	3447	9522	8127
422	8738	0887	0971	4034	7712	2641	3353	5502	7846	9588
423	1056	6651	9833	2943	5952	5070	8758	5232	9501	5316
424	7875	1124	8757	2900	3640	8391	2435	3507	5259	8890
425	5940	4564	3617	8610	1298	9572	0360	0133	7218	7678
426	8767	2399	4161	6507	3136	9428	0775	8145	7192	1278
427	2816	0295	5485	1784	0700	5723	7778	6515	8211	1102
428	7124	2278	5392	7752	7383	8199	3894	8443	9159	0661
429	0023	5824	6786	5423	6432	2039	4932	7784	2216	0171
430	8165	2079	5969	2905	4282	7607	0375	5645	4703	4180
431	4821	4034	2175	8536	1905	9071	5281	0078	4364	8610
432	0429	2024	3309	1109	4698	2117	4937	5345	5063	5579
433	7476	2902	5161	7714	7304	6606	2424	8352	1108	1019
434	9305	6628	2239	3572	4334	4471	5558	5946	6728	4544
435	8639	9457	9439	0894	5350	3436	5815	7834	7886	1072
436	7154	9528	6734	5712	1892	4411	9021	7425	3317	6292
437	3604	4682	3055	0741	6396	5358	4739	9829	6138	4184
438	0047	5733	8928	7477	6943	1940	8016	8978	5522	8304
439	2690	8799	7699	5025	4897	9378	8164	7291	5572	9692
440	0477	5334	4746	1006	9904	6535	4091	7832	8046	5628
441	1270	9419	0241	9840	1462	2125	6731	4968	9024	3966
442	2246	4759	8782	0763	9106	0914	1321	6003	6253	4652
443	5451	5099	0535	3915	9317	0062	5202	5511	9847	6196
444	1926	1426	4200	0220	1778	2063	4933	2086	6219	0415
445	0066	5726	3451	6984	8696	0354	4037	4367	0321	3000
446	2596	7529	6297	5128	3395	6517	6155	3478	3161	7052
447	2161	2297	7006	2414	0021	6273	4817	3234	7165	4100
448	3688	5492	2223	6069	4465	5987	0626	8274	9432	4423
449	3597	6977	9705	8279	6799	8675	2362	2471	1667	5639
450	6452	8638	3265	2198	8871	3614	0006	7514	4097	5384

Table 10-2
(ASTM D3665)

	0	*1*	*2*	*3*	*4*	*5*	*6*	*7*	*8*	*9*
451	1384	4533	6577	2191	0585	4381	7631	1550	6592	2887
452	2461	9517	8282	4070	3289	1928	7927	8132	7353	7131
453	6273	9439	6801	7873	6558	7650	7326	7265	5689	1493
454	6031	0826	0043	2873	0069	1441	2911	1799	6538	2214
455	8728	4102	6707	3310	9662	5918	0673	0337	3583	7137
456	8061	3556	3529	5038	2970	2304	3890	5581	6767	5132
457	5156	1342	3831	5548	5873	7229	5780	1127	7084	9152
458	3113	8988	7400	7638	5252	9205	9958	4526	9724	4486
459	8892	9091	5511	7210	8707	3622	5045	0387	6267	9864
460	3442	4761	3754	3666	7162	0866	5341	3718	6046	9644
461	1023	4796	6770	7957	4441	7088	1062	5381	0323	0949
462	1955	1792	1483	6585	9207	2281	8748	1640	3747	9097
463	6595	6094	5503	9609	1579	8678	0910	7763	0806	4556
464	1585	4333	7958	3143	2395	0677	9960	3030	5874	1613
465	0208	5093	6021	1022	4518	1305	8108	0343	9252	4503
466	4782	2864	7715	0409	9574	7537	7022	0849	2593	2281
467	9887	4038	0683	3560	8379	2718	4084	6795	6381	8063
468	6155	1238	0141	0635	9729	9780	8985	4670	9513	2664
469	6835	0554	8886	1826	0690	4492	7820	1556	2591	8459
470	0322	8682	8380	3859	9206	9793	4504	4948	2743	3567
471	4139	2820	3600	9369	4892	3937	8182	0205	4719	9480
472	6021	7936	5378	0652	6588	0409	6116	8724	2317	7127
473	1744	4254	2522	5958	2557	6472	4818	8608	3651	1300
474	7233	8171	7993	5724	6991	7937	4993	9966	9178	2342
475	2492	8864	4677	6221	3567	0910	6128	4679	0135	0780
476	5876	5346	6554	6741	4349	4582	9794	8614	5728	9082
477	1457	7194	2798	6413	6823	6217	5374	2550	3289	6317
478	7018	7470	1742	1127	1417	8959	3474	3274	8603	4944
479	7481	3763	2115	5858	0864	3597	4179	6589	7851	3942
480	4724	3154	0026	1206	2288	4680	7025	2595	6254	5177
481	2689	2645	7336	6549	0778	5954	1282	8082	8383	9748
482	7494	7658	4933	5481	7289	6314	6074	3549	0249	1765
483	5830	5301	6029	0535	1901	9743	5164	2871	8254	7525
484	5454	9924	5635	8928	5527	2209	0328	4909	7810	5726
485	6417	8331	4613	4842	1302	5798	4548	7280	5115	1009
486	2398	0091	3005	8064	7474	1036	9083	6643	3548	5871
487	5775	2956	0768	1232	1731	2980	7891	6444	6024	7358
488	0462	8543	8234	8437	3256	2181	2678	6397	2525	0241
489	3413	2764	4298	4323	1392	4669	8683	8002	1630	4442
490	7203	9181	8356	0697	9718	6242	0906	2643	3330	3777
491	1230	5875	4501	8274	6514	7551	5456	6721	7026	0766
492	2379	9697	0393	8640	0896	9127	6343	4301	1789	6684
493	2861	4976	3538	5645	0201	4720	8560	7409	4187	2878
494	7632	2207	8515	9529	0201	0976	6502	8060	0493	6394
495	6558	3893	6462	4882	3665	2163	3167	1687	0382	1383
496	8949	4715	9519	0988	7809	8854	8717	4784	0342	3975
497	1785	4853	1362	8209	5073	5994	9830	6829	6534	8202
498	1214	4217	9716	6006	3095	7477	4102	1193	1946	1453
499	3012	8311	4888	5718	5766	9132	9326	9271	9934	5568
500	1361	0901	3061	3134	5580	8732	7644	6995	4829	2075

10.4 DENSITY GAUGE QUALITY CONTROL (QC)

10.4.1 Density Gauge QC Procedures

Density gauge control procedures shall be in accordance with the Department's most current HMA/QMS Density Gauge Operator's Manual. This manual may be obtained through the Department's Materials and Tests Soils Laboratory. The Contractor shall furnish, maintain, and operate the density gauge. The density gauge shall have been calibrated within the previous 12 months by a calibration service approved by NCDOT. The Contractor shall maintain documentation of such calibration service for a 12 month period.

The gauge operator shall be certified by the Department. The QC Certified Density Gauge Operator, although possibly QMS Roadway Certified, will not be allowed to fulfill the requirement for a certified QMS Roadway Technician to be present with each paving operation. The certified QMS Roadway Technician present with each paving operation is responsible for monitoring all paving operations and directly supervising all quality control processes and activities. The density gauge operator will not be able to function in this capacity and properly perform the activities associated with density gauge control.

All density gauge readings taken for either density acceptance or establishment of a target density in a control strip must be recorded and stored in gauge memory for printing. All density gauge readings must be marked on the pavement by tracing the “foot print” of the device. If an area is re-rolled, the test site must be re-tested and a comment placed on the test report as to the reason. Any repeated moving of the gauge to “cherry pick” or find a passing density result or core site is a direct violation of testing procedures and shall be deemed as falsification. For resurfacing projects where the condition of the existing pavement may influence the density results, it is recommended that the Contractor and Engineer simultaneously evaluate the existing pavement prior to the placement of a new asphalt mix. The information recorded from the evaluation can aid in the final acceptance process.

10.4.2 Location of QC Density Gauge Control Strips

It is the contractor's responsibility to determine roller patterns and establish acceptable control strips at locations approved by the Engineer. The Contractor shall notify the Department’s Roadway Inspector sufficiently in advance of the placement of control strips to allow establishment of QA target density and to witness the QC technician’s Standard Count Procedure. The subgrade, base or existing roadway material on which the control strip is constructed must be representative of the majority of the material on which test-sections will be constructed.

10.4.3 Frequency of QC Density Gauge Control Strips

A control strip shall be placed within the first density gauge test section of each job mix formula on a contract provided sufficient mix is produced to construct a 300 foot control strip. After the initial control strip on each job mix formula is placed, a control strip shall be placed at a minimum of once every 14 calendar days for each contract, unless otherwise approved by the Engineer. A control strip placed for any of the below listed reasons will suffice for this 14 calendar day requirement.

1. Control strips shall be placed anytime one or more of the following JMF changes are made:
    a. Any percentage change in total binder content
    b. An aggregate blend change in excess of 10%
    c. Any change in the G_{mb} or G_{mm} on the JMF
2. Control strips shall be placed for each layer of mix.
3. Control strips shall be placed anytime the underlying surface changes significantly.
4. Control strips shall be placed for different layer thickness of the same mix type when the specified thickness varies by more than ± 1/2 inch.
5. Control strips shall be placed anytime the Contractor is proceeding on limited production due to failing densities.
6. Control strips shall be placed anytime a new, re-calibrated, or different density gauge is used.
7. Control strips shall be placed when different plants are being used.
8. The Engineer may require control strips anytime, as deemed necessary.

NOTE: Density gauge control strips are used to determine a target density. They are not for lot acceptance, unless a control strip was placed due to limited production.

10.4.4 Numbering of Density Gauge Control Strips

Control strips for a given contract shall be numbered consecutively by mix type, regardless of plant furnishing mix. However, if a control strip is constructed from mix out of a second plant, the control strip number will be followed by the suffix A; if out of a third plant then the control strip number would be followed by a suffix B, etc.

For example: 1st plant Control Strip would be 1, 2, 3;
2nd plant Control Strip would be 4A, 5A, 6A;
3rd plant Control Strip would be 7B, 8B, 9B, etc.

Each mix type will have a separate series of control strip numbers. Recycled mixes will not be considered a different mix type and will carry the same series of consecutive numbers. Both passing and failing control strips will be numbered and reported to the Engineer.

If a secondary gauge is used on a control strip for back-up purposes, the secondary gauge control strip will be numbered with the same numbers as used for the primary gauge except that it will be followed by the suffix "S".

10.4.5 Construction of Density Gauge Control Strips (QC Procedures)

To establish a control strip, asphalt shall be placed on a section of roadway approximately 300 feet in length. The width shall be equal to the lay-down width of the paver. The material should be of a depth equivalent to the layer depth shown in the plans or required by the Specifications. The Engineer may determine that the travel lane control strip is representative of the shoulders and that the control strip may be used to determine the required density for the shoulders. If shoulder control strips are constructed, they should be constructed to the full shoulder width and the depth shown on the plans.

Since the control strip will assist in establishing the correct rolling pattern to obtain the specified density, it is important that the compaction equipment used on the control strip is operating properly and is capable of compacting the material. Reference should be made to the applicable sections of the Specifications for minimum equipment requirements and rolling procedures.

In order to achieve a complete and uniform coverage, the compactive effort shall consist of roller passes made over the entire control strip surface. The contractor will be responsible for carrying out the compaction operation in such a manner as to obtain the required density uniformly over the entire control strip. In order to assure complete and uniform coverage, the compactive effort shall consist of individual roller passes made over the entire control strip surface. Each coverage should be completed before beginning the next. The density gauge operator should observe and monitor with the gauge the rolling operation to insure that the control strip is rolled uniformly. The random locations of core samples from the control strip will not be marked on the pavement until rolling of the control strip has been satisfactorily completed.

10.4.6 Core Samples From Density Gauge Control Strips

Five (5) core samples shall be taken in a control strip (see Fig. 10-3).
Core samples in the control strip shall be placed a distance of 50 feet apart.
Core samples shall be located at random locations across the width of the mat. Use Table 10-2 and Form QC-5.

Note: The results of the cored samples and their average will be reported at the top of M&T Form 514 QA/QC (Fig. 10-4) and QC-5 (Fig. 10-10). See Section 10.6.3 for procedures for numbering core samples within a control strip.

10.4.7 Determination of QC Density Gauge Control Strip Target Density

Before establishing the QC target density, the QA Roadway Inspector and/or the QA density gauge operator will witness the Standard Count procedure for the QC density gauge(s). Likewise, the QC density gauge technician will witness the Standard Count procedure for QA density gauges. If the standard counts pass, these Standard Counts will be recorded on the M&T 514 QA/QC form. It is not necessary to perform another daily standard count specifically for a control strip, so long as the Department witnessed the QC standard count that day and the materials, and underlying base have not changed.

After the Contractor has completed compaction of the control strip, the QC Density Gauge Operator will conduct 10 density gauge tests, 2 each at 5 random core locations in the control strip. The cores shall be taken from the control strip the same day the mat is placed. The density gauge readings shall be performed at a distance of not more than 1 foot from the center of the gauge to the center of the control strip cores. The surface of the material being tested shall be smooth prior to any tests being performed. The results of the 10 tests will be averaged and the resulting average density will be used in determining the target density for all test sections being constructed in conjunction with a particular

control strip. The target density will be determined by dividing the average density by the average percent compaction of the 5 core samples from the control strip. Test section densities will be expressed as a percentage of the target density. (see Fig. 10-7). When testing with a non-nuclear gauge, the gauge operator will conduct twenty-five (25) non-nuclear gauge density tests, five (5) readings at each of the five (5) random core locations within the control strip.

The final density of the control strip shall be at least equal to the minimum density specified for that particular mix type, based on the average maximum specific gravity (G_{mm}). In addition to determining the gauge target density, the following procedures and tests will be performed to assure that the final density of the control strip meets the minimum density requirements:

1. Prior to opening the control strip area to traffic or no later than the beginning of the next day following the completion of the **density gauge** control strip, the Contractor will core 5 samples from the control strip. The density of each cored sample will be determined in the QC field laboratory. Approved artificial cooling of the pavement layers by the Contractor will be permitted in order to obtain the required core specimens as quickly as possible. No compensation will be made for the cost of artificial cooling. Cored samples shall be taken in accordance with Article 609-7 of the Specifications.
2. During the time between the completion of control strip and the determination of the density of the cored samples, the Contractor will be permitted to continue to place pavement which will be evaluated on the basis of a target density determined by multiplying the unit weight of water (62.4 pcf) by the maximum specific gravity of the mix, which was determined at mix verification. Evaluation of the test sections during this time period will be based on this calculated target density, provided that all other specification requirements are met. Once an acceptable correlated target is established, all previous test section densities shall be recalculated using this correlated target. Should the Contractor elect to produce a different mix design of the same mix type, all of the previous mix in question that has not been tested with a correlated target density will be accepted based on the calculated target unless the Contractor elects to cut density acceptance cores**.**
3. If the average density of the 5 cored samples is equal to or greater than the minimum density specified for the mix, the control strip is considered valid and paving may continue in the normal manner.
4. If the average density of the 5 cored samples fails to meet the minimum density specified for the mix the control strip will be considered unacceptable. Immediately construct a new control strip in accordance with the provisions of Items 1 through 3 above.
5. If the second control strip also fails to meet the minimum density specified for the mix, placing of pavement shall proceed on a limited production basis as defined under "LIMITED PRODUCTION PROCEDURES" in Section 10-9.
6. Check samples may be taken for density gauge control strip core samples but must be in accordance with Article 609-7 of the Specifications, (Section 10.6.10). Specifically, if the control strip fails and a core(s) sample is more than 2% below the average of the 5 cores, check samples may be taken. If check core samples are taken, 2 density gauge readings must be taken at each of the 3 check sample core sites. The gauge readings taken on the left side of each check core will be averaged and will replace the left gauge reading taken at the original core site. The same procedure will be followed for the gauge readings taken on the right. The results from the 3 check cores and 6 gauge readings will be used to calculate the target density. A new target density will then be determined using the new core sample average and the new average of the gauge readings. This process should be completed as soon as possible after the initial determination of a target density since it is the controlling factor in checking density thereafter.
7. If using a non-nuclear gauge for density acceptance testing, 5 gauge readings will be taken at each of the 3 check sample core sites. The non-nuclear gauge measurements taken at each check core site will replace the original core site measurements. The results from the 3 check cores and 15 non-nuclear gauge readings will be used to calculate the target density.
8. Once a correlated target density is established, it will be used thereafter to determine density acceptance until a new acceptable target is obtained for that mix. For 14-calendar day control strips, the previously established target density will be utilized to determine density compliance for all test sections placed the day when the new control strip is constructed. Once the density results of the cored samples from the new control strip are determined and a new acceptable target density established, the new target will be used thereafter until another 14-calendar day control strip is required, at which time this process is repeated.
9. When more than 14 calendar days has passed since the last passing control strip has been established, use the procedures for obtaining a new correlated target, as detailed in items 1-7 above except the maximum specific gravity moving average will be utilized to determine the calculated target.

Figure 10-3

QC/QA Density Gauge Control Strip Procedure

5 Core Samples placed at 50' intervals, 2 nuclear gauge readings (10 gauge readings) OR 5 non-nuclear gauge readings (25 readings) @ each of the core locations will be taken within the control strip.

All density gauge operators (QC/QA) shall be certified by the NCDOT.

QC gauge operator shall confirm with the DOT Roadway Inspector on when and where the control strips will be placed.

The DOT Roadway Inspector shall inform the QA Supervisor and/or the QA gauge operator of the control strip placement.

The QA Roadway Inspector and/or the QA Nuclear gauge operator will witness the Standard Count procedure for the QC nuclear gauge(s). Likewise, the QC Nuclear gauge technician will witness the Standard Count procedure for QA nuclear gauges. These Standard Counts will be recorded on the M&T 514QA/QC form.

Two nuclear gauge readings OR 5 non-nuclear gauge readings will be taken at each core sample site directly on top of the core site. The density gauge readings shall be compared to the core sample results and a nuclear target density shall be determined using the M&T 514 QA/QC form.

QA Personnel will establish their own target density from control strip results, if possible. If it is not possible to take QA readings from the control strip, the QA target density will be determined by multiplying the Maximum Specific Gravity (G_{mm}) by 62.4 lbs/ft^3.

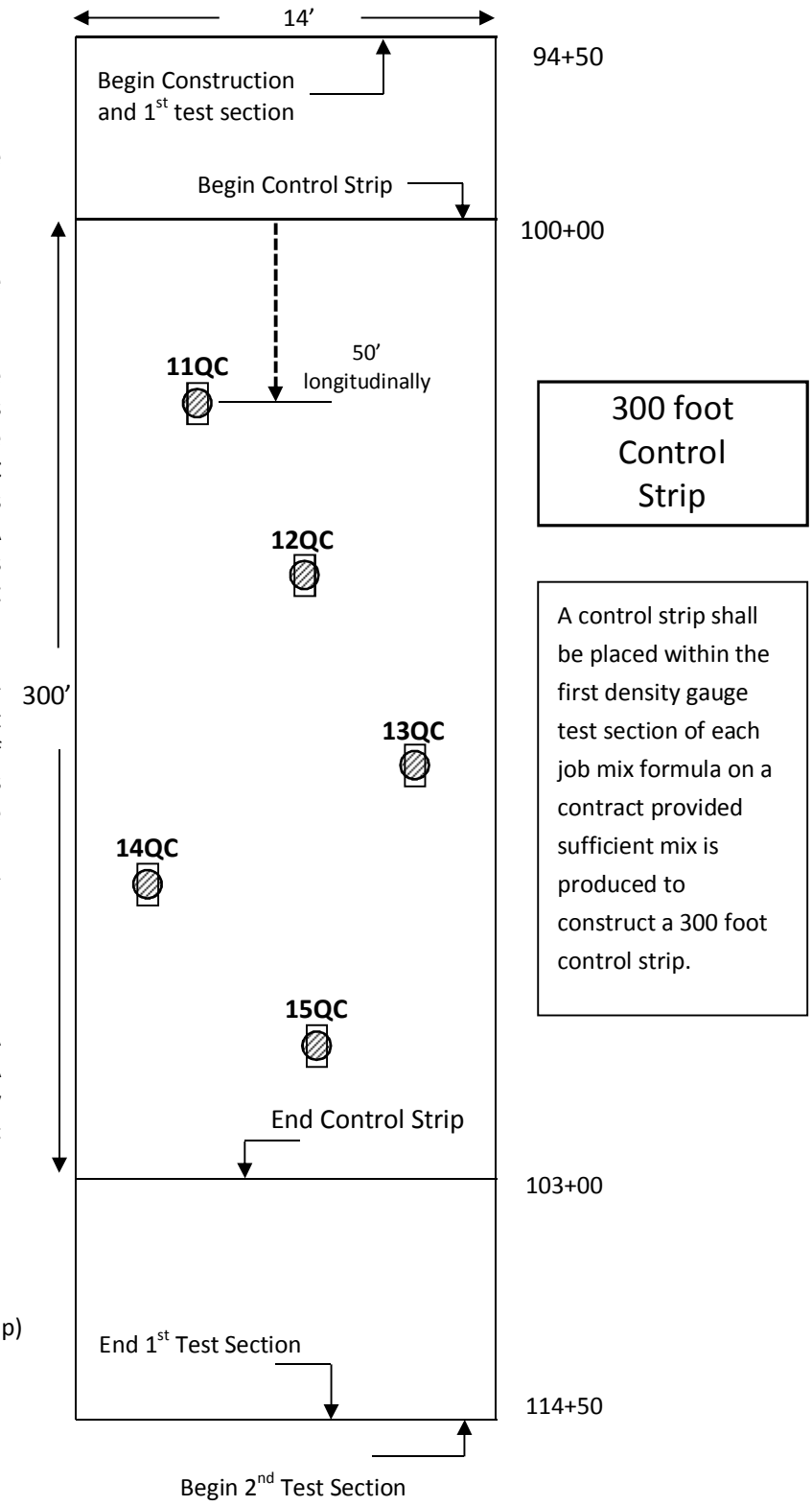

☐ = QC and/or QA density gauge reading

◍ = Core Sample (5 cores per control strip)

Figure 10-4

M & T - 514QA/QC
Rev. 10/08

NORTH CAROLINA DEPARTMENT OF TRANSPORTATION
DIVISION OF HIGHWAYS
CONTROL STRIP DENSITY

Date 9-15-2008

Contract / Project No. 9.87654321 County Brunswick Control Strip No. 3 QC

From Sta. 100 + 00 to Sta. 103 + 00 Lane NBL Rt.

Layer 1st Depth 3.5" Width 14' Route US 117 Job Mix Formula 07-503-151

Gauge Serial No. 2213 Material

STANDARD COUNTS					ASPHALT CORE SAMPLES			
Density					Core No.	Sta.	%Compaction	
6152					11 QC	100+50	93.4	%
2212					12 QC	101+ 00	93.1	%
Allowable Standard Count Range					13 QC	101+ 50	93.6	%
6214	+1.0%	System 1	- 1.0%	6090	14 QC	102+00	94.0	%
2239	+1.2%	System 2	- 1.2%	2185	15 QC	102+50	93.5	%
						Avg. % Compaction	93.5	% (A)

Test	Station	ASPHALT (Wet Density)
1	100 + 50 ⑤	142.8
2	"	143.7
3	101 + 00 ⑧	144.2
4	"	139.9
5	101 + 50 ⑩	141.5
6	"	142.6
7	102 + 00 ②	143.0
8	"	142.5
9	102 + 50 ⑦	140.9
10	"	141.5
	AVG.(PCF)	142.3 (B)

ASPHALT TARGET DENSITY

Average of Control Strip (PCF) ÷ Average of Cores (B÷A) 100 = 152.2 Target Density (PCF)

	A = Core Sample Average		B = Average PCF of Control Strip	

cc: *Resident Engineer [White] *QA Copy Only
QA/QC Technician [Gold]
Soils Engineer [Pink]

Print Name Legibly w/ HiCAMS #: I. R. Nuke (NDT 5159)

QA/QC Technician Signature: I R Nuke

NOTE: By providing this data under my signature and/or HiCAMS certification number, I attest to the accuracy and validity of the data contained on this form and certify that no deliberate misrepresentation of test results, in any manner, has occurred.

10.4.8 Establishment of QC Density Gauge Test Sections

Any pavement placed which requires density testing in accordance with Article 609-7 and Section 10.3 will be divided into test sections for density testing. As detailed in the Specifications, the test sections shall be 2000 linear feet, or fraction thereof per day, of the paver laydown width, except for intersections as noted below. Do not divide full test sections consisting of 2000 LF, unless otherwise approved by the Engineer. As an exception, when a day's production is less than 6,000 linear feet of laydown width, the total length paved may be divided into 3 equal test sections, provided that density gauge testing has not already occurred. If the fraction remaining is less than 100 linear feet, it is recommended that the density be represented by the results of the previous section provided approved compaction equipment and procedures are used. If the remaining fraction is 100 linear feet or more it will be considered a separate test section and shall be accordingly sampled and tested. See Section 10.3.3 for "lot" determination and density acceptance.

The material used in a test section shall be the same type as the material used in the applicable control strip and shall be from the same source. The depth of a test section shall be equal (±1/2 inch) to that of the control strip previously constructed for use with the test section involved except in cases where roadway control strips are used to determine required density for shoulder material.

10.4.9 Testing a QC Density Gauge Test Section

Before testing begins with a nuclear gauge, the daily standard count should be compared to the standard count used to construct the active control strip. The daily standard count should be within the allowable Standard Count Range. The upper range limit is calculated by taking the standard count used for the construction of the active control strip and adding 1% for System 1 and 1.2% for System 2. Likewise, the lower range limit is calculated by subtracting 1% for System 1 and subtracting 1.2% for System 2 from the standard count used to construct the active control strip. This allowable range is computed and recorded on the M&T 514 QA/QC form.

As long as the daily standard count passes the system 1 and system 2 requirements of the gauge and is within the allowable Standard Count Range for the active control strip, testing may be performed. However, if either the daily standard count does not pass the system 1 and system 2 requirements, or if the standard count is outside of the allowable Standard Count Range from the active control strip, then another standard count must be taken until it passes these criterion. Once the daily standard count is accepted, nuclear testing may begin.

Before testing begins with a Pavetracker, a Reference Reading must be taken to ensure the device is measuring the Reference Standard within ±0.5 pcf of the actual density stamped on the Reference Standard. During the days production additional density measurements should be taken on the Reference Standard to ensure the Pavetracker is within tolerance. If the result indicates the device is not within tolerance perform another Reference Reading.

Before testing begins with a PQI device, ensure a monthly Test Block Procedure has been performed as stated in the "PQI Model 300 & 301 Test Block Procedure" manual and the results of the Procedure are within tolerances. This Procedure should be conducted if the PQI density results are questionable. Records of this Procedure should be maintained for verification.

If a non-nuclear gauge is being used 5 density measurements will be taken at each test site and the average of the five readings will determine the density for that particular test site. Refer to Figure 8 in the latest QMS Density Gauge Operator's manual for the testing pattern of a PQI 301 gauge and Figure 9 for the testing pattern of a Pavetracker Plus 2701B gauge. The results shall be in percent (%) compaction, tabulated on Test Section Density Form M&T 516QC and the five test sites averaged.

Each test section, regardless of length, shall be divided into 5 equal increments with one gauge reading being performed in each increment. In addition, for any day's production, each lot shall have a minimum of (5) five nuclear gauge readings. The location of the test within the segment will be established randomly. See the random sampling instruction in the NCDOT QMS Density Gauge Operator's Manual.

Once random locations have been determined, a density gauge reading will be taken at each location. The results shall be recorded in percent compaction, tabulated on Test Section Density summary Form M&T 516QC, and the 5 test locations averaged (see Fig. 10-7).

The following procedures shall apply to test sections which are tested using a target density established from any control strip other than one placed every 14 calendar days for verification purposes. The first test section will begin with the first load of mix for that day's production. On the day the control strip, is placed the QC and QA density gauge operator(s) will use a calculated target density to aid them in determining if an adequate compaction process is occurring. See Section 10.4.7 for calculated target density. This calculated target density will be used to monitor the density until an acceptable correlated target density is determined. Once an acceptable correlated target is established, all previous test section densities shall be recalculated using this correlated target, since the correlated target is considered to be more

accurate than the calculated target density. Report both the original and re-calculated density results on form M&T 516-QC. The recalculated densities of these test sections shall be used to determine density compliance and acceptance. The correlated density results (not the original results) will be entered into HiCAMS. The correlated target density from this control strip will also be used for all test sections that follow until the next acceptable target density is established, in accordance with Section 10.4.7. **If for any reason there is not a correlated target density established for mix that is placed and compacted, that mix will be tested and accepted based on the calculated target unless the Contractor elects to cut density acceptance cores.**

If a correlated target density is not used within 17 calendar days, the contractor will use a calculated target density based on the current moving average of the maximum specific gravity for that mix type to evaluate test sections until an acceptable correlated target has been established. The density results based on the calculated target will be recalculated once a control strip has been constructed and an acceptable correlated target is established.

10.4.10 <u>Procedures for Re-testing a QC Density Gauge Test Section</u>

When nuclear or non-nuclear control is being utilized and a test section is more than 2.0 percent below the lot average, the Contractor may elect to re-test that test section. All re-testing shall be performed in the presence of a representative of the Engineer. The re-testing of test sections must be performed within 2 calendar days of the date of the initial sample. A test section will only be retested once. In addition, QA comparison nuclear or non-nuclear density readings may be taken at all locations.

Re-testing of test sections will be performed as follows:

1) 5 new random test sites will be determined jointly with a representative of the Engineer.
2) All re-test readings must be stored and printed.
3) The average of these 5 new readings will replace the initial test section results.
4) The lot average will be recalculated.

Figure 10-5

Determining Number of Test Sections for Nuclear / Non-Nuclear Density Control

- Contractor's Responsibility, subject to DOT roadway technician's concurrence.
- Done daily to assure the minimum testing frequency is being met.
- Contractor must advise the Roadway Inspector.
- Approved Gauge Operator on project during laydown procedures.

All test sections using Density Gauge Control for density will be a maximum of 2000 feet or fraction thereof per day.

All test sections, regardless of length will have 5 random nuclear gauge readings taken.
(25 Non-Nuclear readings – 5 readings / test site)
It is recommended that pavement less than 100 ft. at the end of the last full test section be evaluated based on the last full test section results.

In addition, any day's production shall have a minimum of 5 gauge readings.

79+00 – 10+00
= 6900 Linear feet
10 feet wide
6900 ÷ 2000 = 3.45

Therefore,
4 test sections minimum

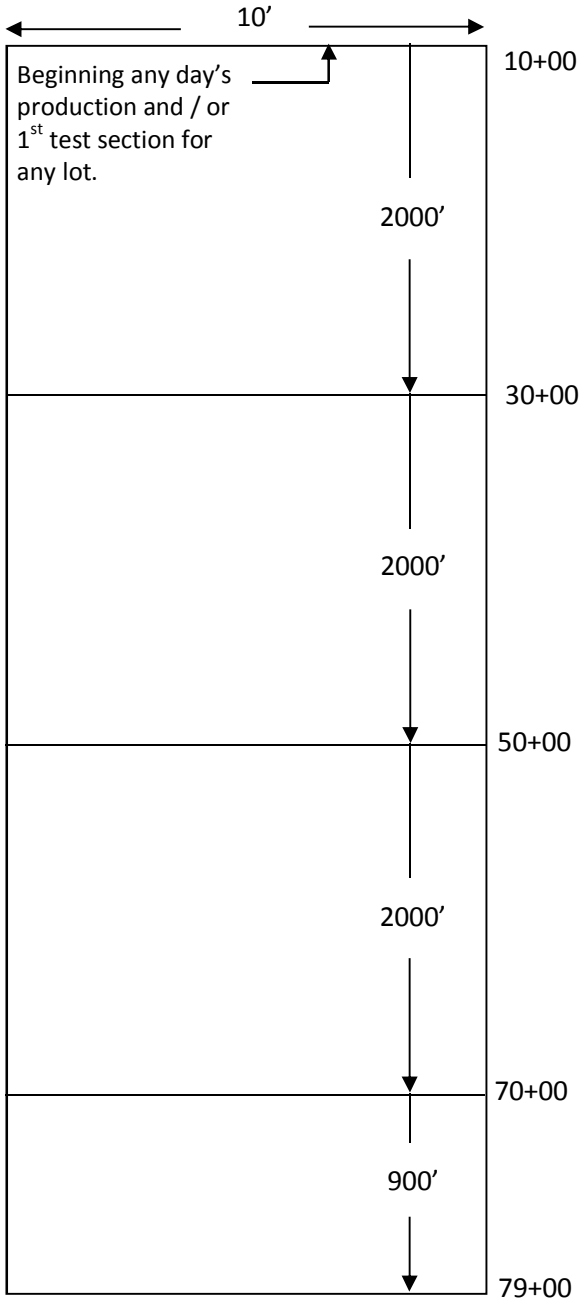

10.4.11 Numbering QC Density Gauge Test Sections

Density Gauge control test sections will have a separate series of numbers for each mix type, per paving operation, for each contract. Test sections for a given contract shall be numbered consecutively by mix type, regardless of plant furnishing mix. When the Contractor has more than one crew placing the same mix on the same project, the test section numbering will run consecutively with the addition of an alphabetical designation behind it.

For example: Crew #1 will number test sections 1, 2, 3, etc.
Crew #2 will number test sections 1A, 2A, 3A, etc.
Crew #3 will number test sections 1B, 2B, 3B, etc.

10.4.12 Reporting QC Density Gauge Test Sections (M&T 516 QC)

Once random locations have been determined, a gauge reading will be taken at each location. Sample locations, sample results in percent compaction, lot average, and other appropriate information shall be recorded on Nuclear Density Test Section Summary Form M&T 516QC by the Contractor's Density Gauge Control Technician. (see Fig. 10-6) The results shall be recorded in percent compaction, tabulated on the form, and the 5 test locations averaged. Once the compaction results are determined, the form is distributed as follows: the gold copy is retained by QC density technician; one copy (white) is furnished to the DOT's Roadway Technician, attached to the daily roadway report (M&T 605) and forwarded to the Resident Engineer.

Figure 10-6

North Carolina Department of Transportation
Division of Highways
Density Gauge Test Section

M&T – 516 QC
Rev. 11/11

Contract/Project No. _____Date_____ Division_____ Crew No. _____Control Strip No. _____

Map/Route No. _____ Contractor _____ J.M.F. _____- _____ -_____ Type Material _____

Layer _____ Gauge Serial No._____ Standard Counts (nuclear gauge only) Sys1_____Sys2 _____

Core Sample Avg. _____% Avg. of gauge readings _____PCF Correlated Target Density _____PCF

Interim Density Calculated Target: 62.4 PCF x _____ = _____Calculated Target PCF
Gmm

Test Sect. No.	Begin Sta.	End Sta.	Length: /5 = Increments

Random No.		Increments		Random (calc.)		Test Site Location			Density Readings	
Length	Width	Length	Width	Length	Width	Station	Offset	Lane	PCF	%
A	B	C	D	A x C =	B x D =	------	-----	-----	------	-------
Comments:								Test Section Average		Pass / Fail

Test Sect. No.	Begin Sta.	End Sta.	Length: /5 = Increments

Random No.		Increments		Random (calc.)		Test Site Location			Density Readings	
Length	Width	Length	Width	Length	Width	Station	Offset	Lane	PCF	%
A	B	C	D	A x C =	B x D =	------	-----	-----	------	-------
Comments:								Test Section Average		Pass / Fail

Test Sect. No.	Begin Sta.	End Sta.	Length: /5 = Increments

Random No.		Increments		Random (calc.)		Test Site Location			Density Readings	
Length	Width	Length	Width	Length	Width	Station	Offset	Lane	PCF	%
A	B	C	D	A x C =	B x D =	------	-----	-----	------	-------
Comments:								Test Section Average		Pass / Fail

At end of production for the day, calculate lot average by averaging test section results: Daily Lot Average _____ % Pass / Fail

*Print Name Legibly w/HiCAMS No. _____

*QC Technician Signature: _____

***By providing this data under my signature and/or HiCAMs certification number, I attest to the accuracy and validity of the data contained on this form and certify that no deliberate misrepresentation of test results, in any manner, has occurred.**

Note: (1) All failing lots must be documented by Resident Engineer on the QA-2B form. Contractor must be notified by letter of any pay adjustment or pavement removal.

10.5 DENSITY GAUGE QUALITY ASSURANCE (QA)

10.5.1 Density Gauge QA Procedures

Quality Assurance is a process of sampling and testing the Contractor's product and monitoring his operations to confirm that the Quality Control results are adequate and accurate. This process is normally performed by Department personnel. Quality Assurance testing shall be accomplished in the following ways:

1) By retesting 100% of quality control core samples from control strips (either core, nuclear, or non-nuclear);
2) By observing the Contractor perform the standard count procedure for the Quality Control nuclear gauge prior establishing a nuclear density control strip;
3) Conducting verification sampling and testing on nuclear or non-nuclear test sections independently of the Contractor's quality control test sections at a frequency equal to or greater than 10% of the required QC sampling and testing frequency;
4) Retesting randomly selected quality control nuclear or non-nuclear test sections at a frequency equal to or greater than 5% of the required Quality Control nuclear sampling and testing frequency;
5) Periodically requiring the Contractor to re-test marked test site(s) in the presence of a certified QA density gauge operator;
6) Periodically observing tests performed by the Contractor;
7) By periodically directing the recalculation of random numbers for the Quality Control (QC) density gauge test locations. The original QC test locations may be tested by QA and evaluated as verification tests;
8) Witnessing the Pavetracker 2701B Reference Count;
9) Requesting the QC to take a reading on the Reference Block to verify Pavetracker is measuring correctly;
10) Witnessing the monthly PQI "Test Block Procedure" and/or verifying if results from the previous "Test Block Procedure" are within tolerences (refer to latest edition of the "PQI Model 301 & 300 Test Block Procedure" manual)
11) Any combination of the above.

Results of all density quality assurance tests will be provided to the Contractor within 3 working days after the samples or tests have been obtained by the QA personnel. Differences between the Contractor's quality control and the Department's quality assurance test results will be considered acceptable if within the following limits:

Test	Acceptable Limits of Precision
Comparison of QC Density Gauge Test	± 2.0 % (percent compaction)
QA Density Gauge Verification Test *	± 2.0 % (percent compaction)
See Section 10.7 for Cores within the Density Gauge Control Strip	

*Note: Verification tests will be compared to QC results from the same test section

In the event test results are outside the above acceptable limits of precision or the quality assurance test results or verification test results fail to meet minimum specification requirements, the Engineer will immediately investigate the reason for the difference. If the potential for a pavement failure is present, the Engineer may suspend production as stated in Article 108-7 of the Standard Specifications while the investigation is in progress. The Engineer's investigation may include checking of the Contractor's testing equipment, comparison testing of other retained quality control samples, or additional core sample testing of the roadway pavement in question.

If additional core samples are necessary to resolve the difference, the Contractor shall core these samples at the direction of the Engineer and these will be tested jointly by the Contractor's quality control and Department's quality assurance personnel. If the reason for the difference cannot be determined, payment for the mix in question will be determined in accordance with Article 105-3 of the Standard Specifications. If the reason for the difference is determined to be an error or other discrepancy in the quality control test results, the applicable quality assurance test results or verification test results will be used to determine compliance with the Specification density requirements.

10.5.2 Quality Assurance (QA) Density Gauge Control Strip Procedures

There will be no separate QA Density Gauge Control Strips constructed, unless directed by the Engineer. The Engineer will monitor the construction of all QC Density Gauge control strips by having a representative present during construction of all control strips. On days when a control strip is being placed, the Department's QA technician must

witness the QC technician's standard count procedure. The location of a nuclear control strip and the core samples within it will be determined by the Contractor subject to the Engineer's approval.

If density gauge control is used, the QA Density Gauge technician will, at all times possible, be present during construction of control strips and establish the QA target density using the Contractor's control strip and core samples. If for whatever reason, the Density Gauge Technician cannot determine a target by taking the 10 readings from a control strip, he may elect to determine a QA target density by use of the maximum specific gravity. In this case, the target density will be determined by multiplying the maximum specific gravity (G_{mm}) from either the mix verification or the moving average, whichever is appropriate, by the unit weight of water (62.4 lbs/ft^3) (1,000 kg/m^3). (This method cannot be used when testing with a non-nuclear gauge. Non-nuclear gauges must be calibrated to the mix by establishing a target density from a control strip.)

The Quality Assurance gauge operator will conduct 10 nuclear density tests, 2 each at 5 core locations in the control strip. These tests shall be taken at the same locations which the contractor's gauge operator conducted his/her tests. The nuclear gauge readings shall be performed at a distance of not more than 1 foot from the center of the gauge to the center of the control strip cores. The results of the 10 tests will be averaged and the resulting average density will be used in determining the target density for all test sections being tested in conjunction with a particular control strip. When testing with a non-nuclear gauge, the QA gauge operator will conduct twenty-five (25) non-nuclear gauge density tests, five (5) readings at each of the five (5) random core locations within the control strip. The target density will be determined by dividing the average density by the average percent compaction of the 5 core samples from the QC control strip. The Engineer may elect to take QA comparison core samples adjacent to any or all QC core samples within a control strip. Test section densities will be expressed as a percentage of the target density. The QA control strip shall have the same number as the QC control strip with the addition of the suffix QA.

10.5.3 Quality Assurance (QA) Density Gauge Test Section Procedures (Comparison/Re-test)

The Department's Quality Assurance Density Gauge Operator will randomly select quality control test sections for mainline and intersections at a frequency of 5% or more for Quality Assurance testing. The location of the test within each of the 5 equal segments will be at the same random QC test locations. The QA test sections will have the same base number as the QC test sections followed by the suffix QA. The QA test section number will be by mix type and by contract. The results shall be in percent, tabulated on test section density form M&T 515QA and the 5 test locations averaged (see Fig. 10-7). The average of these 5 test locations must be within ± 2% of the average percent compaction of the 5 QC gauge readings (see "Limits of Precision" in Section 10.7).

10.5.4 Quality Assurance (QA) Density Gauge Verification & Dispute Resolution Process

The verification requirement will be satisfied by the Department's Density Gauge operator assuring that at least 10% of the required number of Quality Control test sections are tested by determining a new set of random sample locations other than those used by the QC Density Gauge operator. All verification sample numbers and random locations will be documented in a field sample book by the QA Density Gauge operator (see example log book Fig. 10-8). These verification test sections will be in addition to the minimum 5% required comparison test sections. Verification cores will not be taken within a nuclear control strip.

QA Verification test sections will be numbered by the DOT Density Gauge operator. Verification test sections will be numbered by using the same base number as the QC test section followed by the suffix "V". i.e.: 1V, 5V, 10V, etc. When the contractor has more than one paving crew on the same project the same day, using nuclear density control, verification samples will have the same base number as the QC test section followed by the suffix "V".

For example: If the QC test section number is 3A and nuclear verification sample is performed in that same test section the number will be 3AV, 9AV, 15AV, if a third crew is used 3BV, 9BV,15BV etc.

Documentation of these verification test sections will be on the appropriate QMS nuclear density forms. These forms shall be maintained in the project files by the Resident Engineer. In addition to the QA and Verification testing, random cores will be taken by the IA section of the Materials and Tests Unit as part of the Department's Density Assessment Program.

When Limits of Precision for a QA Test Section and/or a Verification Test Section are exceeded (± 2.0%), a Dispute Resolution Process will be implemented. The QA technician shall immediately notify the QC technician and the technicians will perform a field confirmation of density gauges:

A. Field Confirmation of Density Gauges

1. QC and QA technicians should jointly verify all applicable gauge parameters for each device:
   a. Lift thickness
   b. Standard count results are within tolerances
   c. Test mode
   d. Count time
   e. Target density
   f. Correct any issue(s) prior to proceeding with field confirmation
2. QA technician will select a random site on the mat:
   a. QC and QA technicians will take a 1 minute nuclear reading or 5 non-nuclear readings with their respective gauges within the identical "footprint".
   b. Ensure nuclear gauges are at least 33 feet apart and 10 feet from large vertical objects including pick-up trucks and construction equipment when taking reading.
3. If the QC and QA gauge field confirmation readings are <u>not</u> within Limits of Precision (± 2.0%), contact the Soils Laboratory to request a detailed investigation.
4. If the QC and QA gauge field confirmation readings are within Limits of Precision (± 2.0%), the test section(s) in question should be retested by both QC and QA personnel using the appropriate procedures listed below.

B. Verification Test Section - Dispute Resolution Procedures

1. QC technician will retest QA verification test sites for the test section in question while being observed by the QA technician.
2. QA technician will retest QC test sites for the test section in question while being observed by the QC technician.
   a. If the retest does <u>not</u> confirm the original density results (i.e. average of QC retest exceeds ± 2.0% of original QA test section average, and/or average of QA retest exceeds ± 2.0% of original QC test section average), it indicates a possible issue with the gauge(s) or a test procedural error. Contact the Soils Laboratory to request a detailed investigation.
   b. If the retest confirms the original density results (i.e. QC retest is within 2.0% of QA original readings, and QA retest is within 2.0% of original QC readings), it indicates possible density non-uniformity across the mat. Notify Assistant and/or Resident Engineer.
3. QC and QA (while communicating with the Engineer) should investigate to determine the cause (i.e. construction issue, joint densities, material issue, condition of underlying layer, etc.).
4. If the investigation determines the issue is due to the condition of the underlying layer:
   a. An entry will be made on the M&T 515 QA Form documenting the reason.
   b. Where visibly evident, take pictures of the existing roadway prior to covering with resurfacing layer, as supporting evidence.
   c. Paving and testing operations should then proceed in a normal manner.
5. If the underlying layer is not suspect, the Contractor may take action to correct the density non-uniformity issue.
   a. If the Contractor elects to re-roll the area in question as a corrective measure, QC and QA technicians must retest the area and replace the original test result(s) with the new reading(s).
   b. If the Contractor does <u>not</u> re-roll the area:
      i. QC data will be used for acceptance of test section
      ii. QA technician will perform a second Verification Test Section (following initial one). If results of the second Verification Test Section exceed Limits of Precision, contact the Soils Laboratory to conduct a detailed investigation.

C. QA Test Section - Dispute Resolution Procedures

The QC technician will retest all the original test sites in the presence of the QA technician and the QA technician will retest all QC test sites in the presence of the QC technician.

1. If the retest indicates the Limits of Precision are within tolerance (average of 5 readings), continue operating and testing in normal manner.
2. If the retest indicates the Limits of Precision are <u>not</u> within tolerance (average of 5 readings), contact the Soils Laboratory to conduct a detailed investigation.

Figure 10-7

North Carolina Department of Transportation
Division of Highways
Density Gauge Test Section

M&T – 515 QA
Rev. 11/11

Contract/Project No. _____Date_____ Division_____ Crew No. _____Control Strip No. _____

Map/Route No. _____ Contractor _____ J.M.F. _____- _____ -_____ Type Material _____

Layer _____ Gauge Serial No._____ Standard Counts (nuclear gauge only) Sys1_____Sys2 _____

Core Sample Avg. _____% Avg. of gauge readings _____PCF Correlated Target Density _____PCF

Interim Density Calculated Target: 62.4 PCF x _____ = _____Calculated Target PCF
Gmm

Test Sect. No.		Begin Sta.		End Sta.		Length:		/5 =	Increments	
Random No.		Increments		Random (calc.)		Test Site Location			Density Readings	
Length	Width	Length	Width	Length	Width	Station	Offset	Lane	PCF	%
A	B	C	D	A x C =	B x D =	------	-----	-----	------	-------
Comments:								Test Section Average (%)		Pass / Fail
								QC Test Average (%)		Within Limits of Precision: Yes / No

Test Sect. No.		Begin Sta.		End Sta.		Length:		/5 =	Increments	
Random No.		Increments		Random (calc.)		Test Site Location			Density Readings	
Length	Width	Length	Width	Length	Width	Station	Offset	Lane	PCF	%
A	B	C	D	A x C =	B x D =	------	-----	-----	------	-------
Comments:								Test Section Average (%)		**Pass** / **Fail**
								QC Test Average (%)		Within Limits of Precision: **Yes** / **No**

*Print Name Legibly w/HiCAMS No. _____

*QA Technician Signature: _____

cc: Resident Engineer [White]
QA Technician [Gold]

***By providing this data under my signature and/or HiCAMs certification number, I attest to the accuracy and validity of the data contained on this form and certify that no deliberate misrepresentation of test results, in any manner, has occurred.**

EXAMPLE QA DENSITY SAMPLE FIELD LOG BOOK

QA VERIFICATION CORE SAMPLE LOCATIONS

TS NO.	STA	STA	LENGTH	RAND.NO.	CORE LOCATION	WIDTH	RAND. NO.	DIST.FROM BASELINE	%COMP	DATE	TECH. INITIALS
4V	15+00	35+00	2000	0.81	16+20	12	0.21	3	92.6	11/15/2004	RHD
2V	60+00	80+00	2000	0.41	68+20	12	0.85	10	93.4	11/23/2004	RHD
5V	97+75	117+75	2000	0.74	112+55	12	0.23	3	93.7	11/30/2004	RHD

QA NUCLEAR VERIFICATION SAMPLE LOCATIONS

TS NO.	STA	STA	LENGTH	RAND.NO.	LOCATION	WIDTH	RAND. NO.	DIST.FROM BASELINE	%COMP.	DATE	TECH. INITIALS
3V	15+00	19+00	400	0.81	18+24	12	0.21	3	92.6	9/22/2004	RHD
	19+00	23+00	400	0.41	19+64	12	0.85	10	93.4	9/22/2004	RHD
	23+00	27+00	400	0.74	25+96	12	0.23	3	91.3	9/22/2004	RHD
	27+00	31+00	400	0.91	30+76	12	0.53	3	92.1	9/22/2004	RHD
	31+00	35+00	400	0.16	31+64	12	0.17	3	93.9	9/22/2004	RHD
TS AVER.									92.7	9/22/2004	RHD

Figure 10-8

QA COMPARISON CORE SAMPLE LOCATIONS

TS NO.	STA	%COMP	DATE	TECH. INITIALS
4	15+00	92.6	11/15/2004	RHD
6	60+00	93.4	11/23/2004	RHD
1	125+50	92.6	12/1/2004	RHD

QA NUCLEAR RETEST SAMPLE LOCATIONS

TS NO.	STA	STA	LENGTH	RAND.NO.	LOCATION	WIDTH	RAND. NO.	DIST.FROM BASELINE	%COMP.	DATE	TECH. INITIALS

THIS WILL BE THE SAME AS THE CONTRACTOR'S STATIONS AND RANDOM LOCATIONS AS SHOWN ON THE GAUGE PRINTOUT

10.6 CORE SAMPLE DENSITY QUALITY CONTROL (QC)

10.6.1 Core Sample Density Control - General

Core sample density control procedures shall be in accordance with Section 609 of the Standard Specifications and this Manual. The Contractor is required to furnish a certified QMS Roadway Technician with each paving operation. The Technician present with each paving operation is responsible for monitoring all paving operations and directly supervising all quality control processes and activities related to that operation.

10.6.2 Core Sample QC Control Strip Requirements and Procedures

When core sample density control is being utilized, an initial control strip at the beginning of each JMF and contract is not required but is recommended for establishing rolling patterns to achieve the necessary compactive effort. Core sample control strips will be required if production and placement is being performed under limited production procedures due to failing densities. See "Limited Production Procedures" later in this section for details.

Frequency of Control Strips

1. Control strips are only required when the Contractor is proceeding on a limited production basis due to failing densities. Limited Production consists of a 300 ft. control strip plus 100 ft. of pavement at the beginning and end of the control strip. This 500 foot control strip is considered a separate lot.
2. In addition, the Engineer may require control strips anytime, as deemed necessary.

10.6.3 Numbering of Core Sample Control Strips and Core Samples

A. Control Strip

Control strips, if required, for a given contract shall be numbered consecutively by mix type, regardless of plant furnishing mix. However, if a control strip is constructed from mix out of a second plant, the control strip number will be followed by the suffix A; if out of a third plant then the control strip number would be followed by a suffix B, etc.

For example: 1st plant Control Strip would be 1, 2, 3;
2nd plant Control Strip would be 4A, 5A, 6A;
3rd plant Control Strip would be 7B, 8B, 9B, etc.

Each mix type will have a separate series of control strip numbers. Recycled mixes will not be considered a different mix type and will carry the same series of consecutive numbers. Both passing and failing control strips will be numbered and reported to the Engineer.

B. Control Strip Core Samples

QC Control Strip core samples will be numbered consecutively for each mix type being produced each day, except will carry a suffix of QC, regardless of the plant producing the mix. In addition to being marked with the number, the core sample should be marked with the date and mix type.

First Crew:

I 19.0B 1st Control Strip: 1QC, 2QC, 3QC, 4QC, 5QC;
2nd Control Strip: 6QC, 7QC, 8QC, 9QC, 10QC

S 9.5B 1st Control Strip: 1QC, 2QC, 3QC, 4QC, 5QC;
2nd Control Strip: 6QC, 7QC, 8QC, 9QC, 10QC

Second Crew:

I 19.0B 1st Control Strip: 1QCA, 2QCA, 3QCA, 4QCA, 5QCA;
2nd Control Strip: 6QCA, 7QCA, 8QCA, 9QCA, 10QCA

S 9.5B 1st Control Strip: 1QCA, 2QCA, 3QCA, 4QCA, 5QCA;
2nd Control Strip: 6QCA, 7QCA, 8QCA, 9QCA, 10QCA

If a third crew is used the consecutive numbers will continue with a suffix “B”

10.6.4 Construction of Core Sample Control Strips (QC Procedures)

To establish a control strip, asphalt shall be placed on a section of roadway approximately 300 feet in length. The width shall be equal to the lay-down width of the paver. The material should be of a depth equivalent to the layer depth shown in the plans or required by the Specifications. The Engineer may determine that the travel lane control strip is representative of the shoulders and that the control strip may be used to determine the required density for the shoulders. If shoulder control strips are constructed, they should be constructed to the full shoulder width and the depth shown on the plans.

Since the control strip will assist in establishing the correct rolling pattern to obtain the specified density, it is very important that the compaction equipment used on the control strip is operating properly. Reference should be made to the applicable sections of the Specifications for minimum equipment requirements.

In order to achieve a complete and uniform coverage, the compactive effort shall consist of roller passes made over the entire control strip surface. Breakdown rolling shall be performed at the maximum temperature at which the mix will support the rollers without moving horizontally. The breakdown roller should normally be operated with the drive wheel nearest the paver. The contractor will be responsible for carrying out the compaction operation in such a manner as to obtain the required density uniformly over the entire control strip. The compaction rolling shall be completed prior to the mixture cooling below a workable temperature.

To further assure complete and uniform coverage, the compactive effort shall consist of individual roller passes made over the entire control strip surface. Each coverage should be completed before beginning the next. The QMS Certified Roadway Technician should observe the rolling operation to ensure that the control strip is rolled uniformly.

Core Samples from Control Strips shall be taken as shown below: (see Fig. 10-9)

1. A minimum of 5 core samples shall be placed in a control strip.
2. Core samples in the control strip shall be placed a distance of 50 feet apart.
3. Core samples shall be located at random across the width of the mat.

Figure 10-9
QC/QA Core Density Control Strip Procedure

5 Cores (5 random locations) will be taken within the 300' control strip.
The 5 Core Samples will be taken at 50' intervals **in the longitudinal direction and at random locations transversely across the width of the mat, but not less than one foot from the edge of pavement.**

Core Control strips will only be required when operating under limited production unless otherwise directed by the Engineer.

QC shall confirm with the QA Roadway Technician on when and where the control strips will be placed.

The 500 ft. of pavement that includes the control strip will be considered a lot. The average density of five control strip cores will be used as the density result for acceptance of that lot.

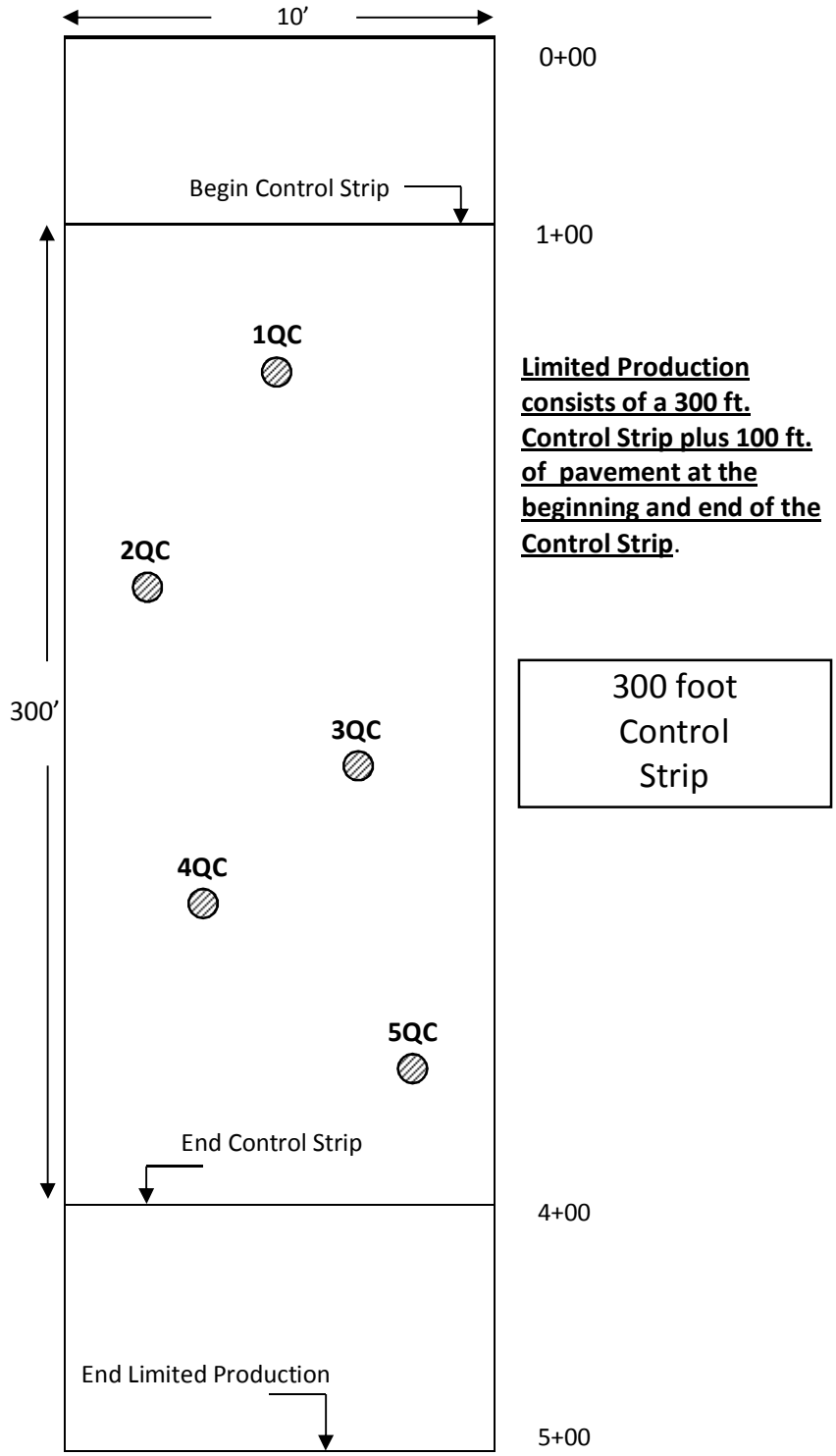

10.6.5 Determination of QC Core Sample Control Strip Density

As stated previously, core sample control strips are **only** required when the Contractor is proceeding on a limited production basis due to failing densities. After the Contractor has completed compaction of the control strip, cores samples will be obtained as outlined above. The bulk specific gravity of each core will be obtained and compared to the maximum specific gravity for the mix in accordance with Section 7.15.

If the average density of the 5 core samples (G_{mb} / G_{mm}) is equal to or greater than the specified density for the mix, the control strip will be considered acceptable and paving may continue. If the average density of the 5 core samples (G_{mb} / G_{mm}) fails to meet the specified density of the mix, then a new control strip should be immediately constructed. If two control strips have been placed under limited production, as detailed in Article 609-7 of the Specifications, without achieving satisfactory density results, then the Contractor should cease production of that mix type until such time as the cause of the failing test results can be determined. Unless otherwise approved, the Contractor will not be allowed to produce this mix type on the contract until evidence is provided that density can be obtained.

10.6.6 Establishment of QC Core Sample Test Sections

Any pavement placed which requires density testing in accordance with Article 609-7 and Section 10.3, will be divided into test sections for density testing. As detailed in the Specifications, the test sections shall be 2000 linear feet, or fraction thereof, of the paver laydown width, except for intersections as noted below. Do not divide full test sections consisting of 2000 LF, unless otherwise approved by the Engineer. As an exception, when a day's production is less than 6,000 linear feet of laydown width, the total length paved may be divided into 3 equal test sections, provided that core sample locations have not already been established.

If the fraction remaining is less than 100 linear feet, it is recommended that the density be represented by the results of the previous section provided approved compaction equipment and procedures are used. If the remaining fraction is 100 linear feet or more it will be considered a separate test section and shall be accordingly sampled and tested. See Section 10.3.3 for "lot" definition and density acceptance.

If a control strip is constructed to establish the rolling pattern, the material used in a test section should be the same type of material used in the applicable control strip and should be from the same source. The depth of a test section should be equal (±1/2 inch) to that of the control strip previously constructed for use with the test section involved except in cases where roadway control strips are used to determine required density for shoulder material.

Cored samples of the compacted pavement shall be taken at random locations from the full depth of the course. Form QC-5 shall be used to determine the random location of each core (See example in Section 10.6.7). The samples shall be taken <u>no later than the beginning of the next production day</u>, not to exceed 3 calendar days. The Contractor may elect to cool the pavement layers by approved artificial methods to allow cutting the core samples as quickly as possible. No compensation will be made for the costs of artificial cooling.

10.6.7 Determining Random Sample Locations for QC Core Sample Density Testing

Form QC-5 and tables of random numbers shall be used to randomly locate density test sites in order to avoid repetition. The following Random Sampling Procedures and Random Sample Number Tables shall be used to locate both density gauge and core sample locations within the normal density test sections. Control strip core samples are randomly located transversely, but not longitudinally since these are required to be spaced 50 feet apart within the control strip. The test section random sample locations shall be determined prior to beginning each test section and shall be documented on Form QC-5. The Contractor's QC technician should maintain a copy of this form and is also required to furnish a copy to the Department's QA roadway technician no later than the end of that production day. No other method of obtaining random numbers for the location of either type density samples is acceptable. While the following procedures generally apply to determining random locations for either density gauge or core sample density control, the example given applies primarily to core sample control. The NCDOT Density Gauge Operator's Manual should be consulted for a detailed example of locating density gauge test sites.

Note: ASTM D3665 will be the only acceptable method used to produce random numbers for the QC-5 Form with the following stipulations. Random numbers in Table 10-2 are to be used to calculate density test locations and are to be used consecutively regardless of the mix type. The starting point will always be the upper left corner of the random number table and the progression will be down the numbers in that column. Once all five hundred numbers in a column have been used, the progression will be to the top of the next column and the process repeated. As random numbers are used from the table, each used random number shall be lined through (not obliterated) to show that they have been used. When ASTM D3665 is used, the following additional rules will also apply. The same random numbers table will be used for all mix types per calendar year. If all random

numbers in Table 10-2 are used prior to the end of the calendar year, this process will begin anew and continue through the end of that same calendar year.

The following are step-by-step instructions of how to locate the random test sites for five test sections. A completed QC-5 form (Fig. 10-10) containing this example follows these instructions.

Note: QC-5 form shall be completed by either the contractor's certified roadway technician or density gauge operator

1. Determine the test section length, control section length, or length in question and the number of sample locations required by referring to the appropriate specification or procedures. Each test section length is 2000 feet or portion thereof.

2. Determine the random sample numbers by referring to Table 10-2. Using the appropriate four digit random number that has been selected, place a decimal in front of the first two digits. Going down the column in the same manner, repeat this process using the next random sample numbers until the required number of locations has been determined. In the example shown below, refer to the first column of four digits, use the first two digits which are 81. By placing a decimal in front of these two digits, it becomes .81. Going down the column in the same manner, the next four random sample numbers are .41, .74, .91, and .16.

3. Multiply each random sample number by the length of the test sections determined in No. 1 above.
   In this example, a total of 9125 LF was paved. By dividing this length by 2000 it is determined that four full and one partial test sections are required for this length of paving.

   2000 LF X 4 full test sections = 8000 LF & 1125 LF (9125 LF total – 8000) for a partial test section.

Therefore:					
	2000	2000	2000	2000	1125
	x .81	x .41	x .74	x .91	x .16
	1620	820	1480	1820	180

4. Add the distances determined in No. 3 to the beginning stations of each test section.
   <u>For this example, the beginning station of the 1st test section will be 0+00.</u>

0+00	20+00	40+00	60+00	80+00
+ 16+20	+ 8+20	+ 14+80	+ 18+20	+ 1+80
16+20	28+20	54+80	78+20	81+80

5. Again referring to the same random sample numbers from Table 10-2 used in No. 2 above, determine a second set of random sample numbers to be used in determining distances from the reference edge of the test sections. To do this, place a decimal in front of the second two digits in each of the numbers and record. These random numbers become .21, .85, .23, .53, and .17.

6. Multiply each random sample number determined in No.5 by the width of the test section.
   Calculate to the nearest whole number. In this example, the width is 12 feet.

Therefore:					
	12	12	12	12	12
	x .21	x .85	x .23	x .53	x .17
	2.52 (3')	10.20 (10')	2.76 (3')	6.36 (6')	2.04 (2')

7. Record the stations and distances from the reference edge of each section on the appropriate form.
   In this example, the tests would be located at the following stations and would be recorded on the QC-5 Form.

Note 1: No Test site should be located within one (1) foot of either edge of the test section.

Note 2: Once a random test site has been determined it shall not be moved unless it is within (1) foot of the edge of pavement.

Summary of Test Site Locations

(1) Sta. 16+20, 3 feet from the reference edge
(2) Sta. 28+20, 10 feet from the reference edge
(3) Sta. 54+80, 3 feet from the reference edge
(4) Sta. 78+20, 6 feet from the reference edge
(5) Sta. 81+80, 2 feet from the reference edge

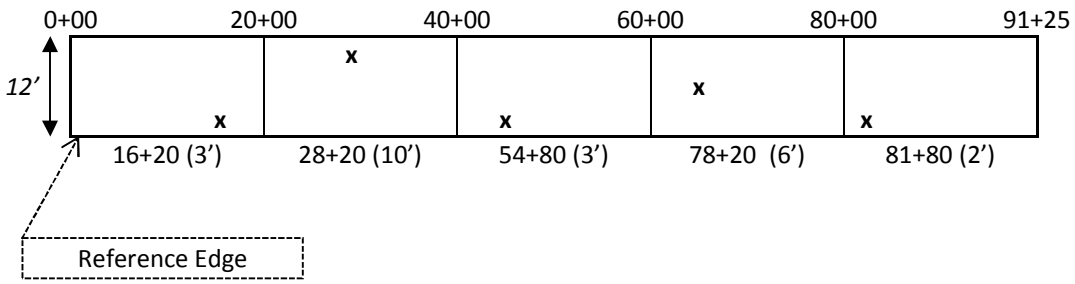

Note 1: See the completed QC-5 Form (Fig. 10-10) on the next page.

Note 2: The QC-5 form shall be completed by either the Contractor's certified roadway technician or certified density gauge operator.

Figure 10-10

QC-5 Rev. 12-12-2002

NORTH CAROLINA DEPARTMENT OF TRANSPORTATION

DAILY CORE LOCATION & LOT SUMMARY

DATE: 9-22-10

PROJECT NO.: 8.1234567 MAP /RT. NO.: US 117 CONTRACTOR: Quality Paving PLANT LOCATION: Everywhere, NC

BASE TYPE: (New) I 19.0 C LANE DESC.: NBL Rt. BASELINE: Rt. EOP

TYPE MIX: S 9.5 B JMF NO.: 07-503-151 PROJECT ENGINEER: Payfore DeMix

CORE #	TEST SECTION			RANDOM #		LENGTH / WIDTH x RANDOM #		TEST SECTION BEGINNING STATION # G	CORE LOCATION		CORE SAMPLE THICKNESS	PERCENT COMPACTION
	TEST SECTION NO.	LENGTH A	WIDTH B	LENGTH C	WIDTH D	LENGTH E=A x C	WIDTH F=B x D		STATION G + E	DIST.FROM BASELINE F		
1	1	2000	12'	.81	.21	1620	2.5	0+00	16+20	3	1.5 "	93.6
2	2	2000		.41	.85	820	10.2	20+00	28+20	10	1.6 "	92.8
3	3	2000		.74	.23	1480	2.8	40+00	54+80	3	1.4 "	93.1
4	4	2000		.91	.53	1820	6.4	60+00	78+20	6	1.5 "	93.5
5	5	1125	12'	.16	.17	180	2.0	80+00	81+80	2	1.5 "	92.4
											LOT AVERAGE	93.1

CONSTRUCTION TYPE:
THE "NEW" CONSTRUCTION CATEGORY WILL BE DEFINED AS PAVEMENTS, EXCLUSIVE OF IRREGULAR AREAS MEETING ALL THREE OF THE FOLLOWING CRITERIA:

1.) PAVEMENT PLACED ON A NEW AGGREGATE OR SOIL BASE COMPACTED TO THE SPECIFIED DENSITY OR PAVEMENT PLACED ON A NEW ASPHALT MIX LAYER (EXCLUDING WEDGING AND LEVELING);
2.) PAVEMENT WHICH IS WITHIN A DESIGNATED TRAVEL LANE OF THE FINAL TRAFFIC PATTERN; AND
3.) PAVEMENT WHICH IS 4.0 FEET (1.2 METERS) OR WIDER.
AS AN EXCEPTION, WHEN THE FIRST LAYER OF MIX PLACED ON AN UNPRIMED AGGREGATE BASE AND IS 2.0 INCHES (50 MILLIMETERS) OR LESS IN THICKNESS, THE LAYER WILL BE INCLUDED IN THE "OTHER" CONSTRUCTION" CATEGORY.
THE "OTHER" CONSTRUCTION CATEGORY WILL INCLUDE ALL PAVEMENT EXCEPT AS DESCRIBED ABOVE AND ALSO ALL S4.75A MIX TYPES.

NEW ✓ OTHER ☐

QC Roadtech RD1-588
* PRINT CERTIFIED QMS TECHNICIAN'S NAME w/HiCAMS#

QC Roadtech
* CERTIFIED QMS TECHNICIAN'S SIGNATURE

QC Labtech P1S-422
* PRINT QC PLANTTECHNICIAN'S NAME w/HiCAMS#

QC Labtech
* CERTIFIED QC PLANTTECHNICIAN'S SIGNATURE

LOT PASSES ✓
LOT FAILS

NOTE: CONTRACTOR MUST BE NOTIFIED BY LETTER OF ANY PAY ADJUSTMENTS OR PAVEMENT REMOVAL.

* BY PROVIDING THIS DATA UNDER MY SIGNATURE AND/OR HiCAMS CERTIFICATION NUMBER, I ATTEST TO THE ACCURACY AND VALIDITY OF THE DATA CONTAINED ON THIS FORM AND CERTIFY THAT NO DELIBERATE MISREPRESENTATION OF TEST RESULTS, IN ANY MANNER, HAS OCCURRED.

10.6.8 Testing a Core Sample Test Section (QC)

NCDOT Specifications require that all asphalt mixes be compacted to a minimum of 92.0 percent of the maximum specific gravity (G_{mm}), except for SF9.5A and S4.75A mixes, which shall be 90.0 and 85.0 percent of maximum specific gravity (G_{mm}), respectively. The density of each test section will be determined by comparing the bulk specific gravity of the core samples, which were obtained at random locations, to the maximum specific gravity (G_{mb} / G_{mm}) of mix placed in accordance with Section 7.12. Density compliance for core samples will be initially determined by use of the maximum specific gravity obtained during initial mix verification. Once sampling and testing of the mix occurs, the average maximum specific gravity (G_{mm}) for the number of tests performed will be utilized until a moving average of the last four maximum specific gravities are obtained. Once a moving average of four tests is obtained it will be used from that point forward.

If the core sample density results for each test section fails to meet the Specifications requirements detailed above, and in Table 610-6, the test section will fail and may require corrective action.

The density results from all Test Section constructed during a day's production will be averaged to establish a lot. (See Section 10.3.3 for the determination of lots). All test sections regardless of length will have a minimum of (1) one random core taken. In addition, for any day's production, each lot shall have a minimum of (3) three core samples taken. As an exception, when a day's production is less than 6,000 linear feet of laydown width, the total length paved may be divided into 3 equal test sections, provided that core sample locations have not already been established.

10.6.9 Numbering Quality Control (QC) Core Samples

A. Quality Control Cores will be numbered consecutively for **each mix type** being produced **each day**. QC core samples numbers will start over with #1 each day for each mix type. In addition to being marked with the number, the core sample should be marked with the date and mix type.

Example	*1st Day:*	I 19.0B: 1, 2, 3, etc.	S 9.5B: 1, 2, 3, etc.
	2nd Day:	I 19.0B: 1, 2, 3, etc.	S 9.5B: 1, 2, 3, etc.

B. If the Contractor has more than one paving operation on the same project, the second crew will have a separate series of consecutive numbers followed by a suffix "A".

Example	*1st Crew:*	I 19.0B: 1, 2, 3, etc.	S 9.5B: 1, 2, 3, etc.
	2nd Crew:	I 19.0B: 1A, 2A, 3A, etc.	S 9.5B: 1A, 2A, 3A, etc.
	3rd Crew:	I 19.0B: 1B, 2B, 3B, etc.	S 9.5B: 1B, 2B, 3B, etc.

C. If a second or third plant is used on the same day's operation, the numbers will continue consecutively with the appropriate suffix, if a suffix is applicable.

Example	*1st Plant:*	I 19.0B: 1, 2, 3	S 9.5B: 1, 2, 3, etc.
	2nd Plant:	I 19.0B: 4, 5, 6, etc.	S 9.5B: 1A, 2A, 3A, etc.

10.6.10 Checking QC Core Samples

The Contractor may elect to take check core samples for any of the reasons below:

1. When cored sample control is being utilized and a core sample(s) is more than 2.0 percent below the average of all core samples from the same lot, that core(s) sample may be checked.
2. When a control strip fails and a core sample(s) is more than 2.0 percent below the average of the control strip, that core(s) may be checked.

For each core sample that is in question, there shall be 3 check samples taken: 1 adjacent (8 in. center-to-center transversely) to the initial sample and 2 cores (10 feet on either side) longitudinally from the initial sample (see Fig. 10-11). The results of these 3 check samples will be averaged and this average shall be used instead of the initial core results in question. **The initial core sample results will not be used if check samples are taken**. Check samples must be taken within 2 calendar days of the date of the initial sample. Only 1 set of check samples per sample location will be allowed. If full depth cores are necessary at these check sample locations, separation of the layer to be tested will be the responsibility of the Contractor. All check samples shall be taken in the presence of a representative of the Engineer and transported by the Contractor to the appropriate QC Lab. The Roadway Technician will place these samples in a sealed

container if they are not to be directly transported to the QA Lab by a DOT Technician. Core sample checking procedures and requirements are as follows:

(Only allowed if core result is below the lot average by more than 2.0%)
- **Contractor's option**
- Must be taken within 2 calendar days of original sample
- Only 1 set of check samples per original core
- Contractor's responsibility to separate layers of check samples
- Must be taken in presence DOT representative

Figure 10-11
Check Sample Procedure

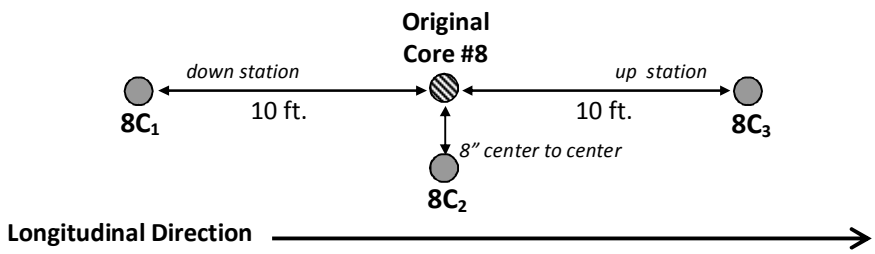

Original Sample #8 = **89.3%**

Check Samples
$8C_1$ = 88.4%
$8C_2$ = 88.8%
$8C_3$ = 88.7%
Avg. = 88.6%

Average of 3 check samples (88.6%) shall replace original sample results (89.3%) for payment.

10.6.11 <u>Numbering Quality Control (QC) Check Core Samples</u>

1. The specifications allow check samples adjacent to the original core and 10 feet longitudinally each side of the original core.

2. All check samples will carry the same base number as the original core sample followed by a C_1, C_2, C_3 series of suffixes.

   Example : If core number **8** is in question, the check core samples will be:
   $8C_1$ (10' down station), **$8C_2$** (adjacent), and **$8C_3$** (10' up station).

10.6.12 <u>Reporting Core Sample Control (QC) Test Sections (Form QC-5)</u>

Once random locations have been determined, a core sample will be taken at each location. Sample locations, sample results in percent compaction, lot average, and other appropriate information shall be recorded on Form QC-5 (see Fig. 10-10) The form shall be initiated by the Contractor's QC Technician by completing sample location information at the paving site. The QC samples and Form QC-5 will be taken to the appropriate QC Lab by QC personnel. Once the compaction results are determined, the QC Plant Technician will complete the thickness and compaction information on the form. The original form is returned to the DOT's Roadway Technician as soon as the test results are known. The DOT's Roadway Technician will attach the form to the daily roadway report (M&T 605) and forward to the Resident Engineer.

Figure 10-12
Determining Number of Test Sections Cored Density Control

- Contractor's Responsibility, subject to DOT roadway technician's concurrence.
- Done daily to assure the minimum testing frequency is being met.
- Contractor must advise the Roadway Inspector.

All test sections for core sample density will be a maximum of 2000 feet or fraction thereof per day.

All test sections, regardless of length will have a minimum of 1 random core taken.

In addition, any day's production shall have a minimum of 3 core samples taken.

4800 linear feet , 10 feet wide
4800 LF ÷ 2000 LF = 2.4

Therefore,
3 cores required, minimum.

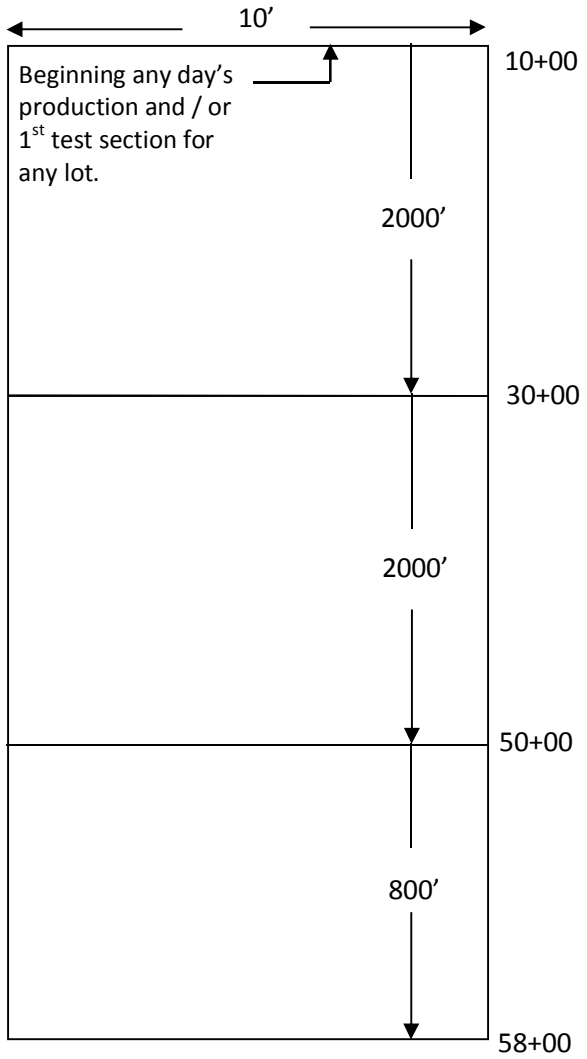

10.7 CORE SAMPLE DENSITY QUALITY ASSURANCE (QA)

Quality Assurance is a process of sampling and testing the Contractor's product and monitoring his operations to confirm that the Quality Control results are adequate and accurate. This process is normally performed by Department personnel. Quality Assurance testing shall be accomplished in the following ways:

1) Conducting verification sampling and testing on test sections at random locations within the same QC test sections at a frequency of 10% of the required QC sampling and testing frequency.
2) Retesting randomly selected quality control core samples at a frequency equal to or greater than 10% of the total Quality Control core samples per mix type, per calendar year, for each plant;
3) Periodically observing sampling and testing performed by the Contractor;
4) By periodically directing the recalculation of random numbers for the quality control core test locations. The original QC test locations maybe tested by QA and evaluated as verification tests;
5) By any combination of the above.

Comparison and verification core samples will be taken in the presence of a DOT technician, and either delivered directly to the appropriate QA Lab by a DOT technician or placed in a sealed container and delivered to the Contractor's QC Lab for pickup by QA personnel. Results of all density quality assurance tests will be provided to the Contractor within 3 working days after the samples have been obtained by the QA personnel.

Differences between the Contractor's quality control and the Department's quality assurance test results will be considered acceptable if within the following limits.

Test	Acceptable Limits of Precision
Retest of QC Core Sample	± 1.2% (percent compaction)
QA Verification Core Samples*	± 2.0 % (percent compaction)

*Note: Verification tests will be compared to QC results from the same test section.

In the event test results are outside the above acceptable limits of precision or the quality assurance or verification test results are below the minimum specification requirements, the Engineer will immediately investigate the reason for the difference. If the potential for a pavement failure is present, the Engineer may suspend production as stated in Article 108-7 of the Standard Specifications while the investigation is in progress.

The Engineer's investigation may include checking of the Contractor's testing equipment, comparison testing of other retained quality control samples, or additional core sample testing of the roadway pavement in question. If additional core samples are necessary to resolve the difference, the Contractor shall core these samples at the direction of the Engineer and these will be tested jointly by the Contractor's quality control and Department's quality assurance personnel. If the reason for the difference cannot be determined, payment for the mix in question will be determined in accordance with Article 105-3 of the Standard Specifications. If the reason for the difference is determined to be an error or other discrepancy in the quality control test results, the applicable quality assurance test results will be used to determine compliance with the Specification density requirements.

10.7.1 Core Sample Test Section Procedures

Core samples to be tested at a Department laboratory will be taken in the presence of a DOT technician, and either delivered directly to the appropriate QA Lab by a DOT technician or delivered to the Contractor's QC Lab for pickup by QA personnel. If the cores are delivered to the QC lab for later pick-up, they should be placed inside a six (6) inch diameter tin or plastic cylinder and then placed into a cloth sample bag. The sample bag should then be sealed with a metal tag. These sample cylinders, sample bags and metal tags should be obtained from the Division QA Lab. If core samples are not delivered to the QA Lab in accordance with either of the above methods, the samples will be discarded and not tested.

10.7.2 Quality Assurance (QA) Core Sample Verification & Dispute Resolution Process

Verification sampling and testing is an integral part of the Department's quality assurance process. When cutting Verification Cores, a 2nd core will also be cut and designated as a Dispute Resolution core that may be used in the event the Verification core fails to compare within limits of precision to the QC sample. **The DR sample will be cut from the same test section as the Verification sample at a separate and random location.** This independent sampling and testing is performed by QA personnel to help assure that QC density results are accurate. All verification sample numbers and random locations will be documented in a field sample book by the QA Density Gauge operator (see example log book Fig.

10-8). It is very important that all personnel involved with the QMS density sampling and testing procedures of asphalt pavements be knowledgeable of these requirements and guidelines.

If the test results for the verification core and QC core within a test section are not within the required limits of precision the following steps should be taken to determine the acceptability of the pavement:

1. The Engineer will determine any extenuating circumstances such as poor subgrade issues, leveling, or wedging and may accept failing test sections in accordance with Article 105-3. If it is determined that the area the Verification core was taken is not representative of the entire test section, the QC density results will be used for acceptance. If the engineer determines extenuating circumstances exist then that should be documented and the QC results shall be used for acceptance.
2. If the Engineer determines extenuating circumstances do not exist then:
   The Verification core and original QC cores from the failing test section will be jointly re-tested. At the same time, QA personnel will take possession of all original QC cores from that day's lot. If the re-test of the original QC and V cores are within limits of precision, the original QC test result will be used for acceptance. No further re-testing will be required if above is met.
3. After jointly retesting, if the original Verification test result is still not within the limits of precision when compared to the QC result, the Dispute Resolution core from the Verification test section and QC cores from the remaining test sections of that day's lot will be tested at the Central or another Division QA Lab.
   a) The DR test result will be used in lieu of the original QC result for acceptance of that test section.
   b) If the re-tests of the original QC cores from the remaining test sections are within limits of precision, the original QC results will be used for the remaining test sections.
   c) If the QC cores from one or more of the remaining test sections fail to meet the limits of precision, a DR core will be taken from those test sections and tested at the Central or another Division QA Lab. When required the DR test result will be used in lieu of the QC result for the applicable test sections.
   d) When complete with the dispute resolution process, the applicable QC or DR results from individual test sections will be averaged to determine acceptance of the entire lot.

10.8 ACCEPTANCE OF DENSITY (DENSITY GAUGE AND/OR CORE SAMPLE CONTROL)

The Department will evaluate the asphalt pavement for density compliance after the asphalt mix has been placed and compacted using the Contractor's quality control test results, the Department's quality assurance test results (including verification samples), and by observation of the Contractor's total density quality control process conducted in accordance with Section 609. NCDOT Specifications require that all asphalt mixes be compacted to a minimum of 92.0 percent of the maximum specific gravity (G_{mm}), except for SF9.5A and S4.75A mixes, which shall be 90.0 and 85.0 percent of maximum specific gravity (G_{mm}), respectively.

The pavement will be accepted for density on a lot by lot basis. See Section 10.3.3 for the "Determination of Lots". A passing lot for density acceptance purposes is defined as a lot for which the average of all test sections meets minimum specification requirements.

A failing lot for density acceptance purposes is defined as a lot for which the average of all test sections, and portions thereof, fails to meet the minimum specification requirement. If additional density sampling and testing, beyond the minimum requirement, is performed and additional test sections are thereby created, then all test results shall be included in the lot average. A lot does not fail for acceptance purposes and cannot be penalized unless the average for that lot fails to meet the minimum specification requirement. However, any portion of a lot that is obviously unacceptable in the opinion of the Engineer will be rejected for use in the work and replaced with mix that meets the specification requirements.

10.8.1 Pay Factor for Density

If the Engineer determines that a given lot of mix which falls in the "**new**" category does not meet the minimum specification requirements but the work is determined to be reasonably acceptable and may remain in place, the lot may be accepted at a reduced pay factor in accordance with the following formula. The reduced pay factor will apply only to the mix unit price.

$$\textbf{Reduced Pay Factor} = 100 + \left[\left(\frac{Actual\ Density - Specified\ Density}{2}\right) \times 30\right]$$

Where:

Actual Density = the lot average density, not to exceed 2.0% of the specified density

Specified Density = the density in Table 610-6 or as specified in the contract

Acceptance of all failing lots falling in the "**other**" category will be made under the provisions of Article 105-3 of the Standard Specifications.

Any density lot not meeting the density requirements detailed in Table 610-6 will be evaluated for acceptance by the Engineer. If the lot is determined to be reasonably acceptable, the mix will be paid at an adjusted contract price in accordance with Article 105-3 of the Specifications. If the lot is determined not to be acceptable, the mix will be removed and replaced with mix meeting and compacted to the requirement of the Standard Specifications.

A high frequency of asphalt plant mix or density deficiencies may result in future deficient asphalt being excluded from acceptance at an adjusted contract unit price in accordance with Article 105-3. The Engineer shall document cases of frequent deficiencies and provide in writing the details of deficiencies to the Contractor with copies to the Pavement Construction Engineer and Asphalt Design Engineer. Upon receipt of these details, the Contractor shall develop a plan for corrective action and submit it to the Engineer in writing. Failure to satisfactorily correct repeated deficiencies may result in future deficient asphalt being excluded from acceptance at an adjusted contract unit price in accordance with Article 105-3. This acceptance process will apply to all asphalt produced or placed and will continue until the Engineer determines a history of quality asphalt production and placement is reestablished.

Any reduction in pay due to failing densities will be in addition to any reduction in pay due to failing mix property test results on the same mix. For example: If there is a 10% price reduction due to mix properties and a 30% reduction due to failing densities, the total price reduction will be 40% or a pay factor of 60% that will be applied to the contract unit bid price.

10.8.2 Small Quantities Density Acceptance Process

For individual structure replacements and projects having 1,500 linear feet or less of roadway pavement, a modified density acceptance process shall be used.

This small quantities acceptance process will require core sample density control to be used. The pavement meeting the requirements of this section will be included in the "other" construction category. Pavement in the "other" construction category which fails to meet the minimum density specification requirements shall be accepted in accordance with Article 105-3 of the Specifications.

A minimum of two (2) core samples per pavement layer per day will be required and shall be randomly located according to the procedures of Section 10.6.7. However, if the project includes a structure (bridge, culvert, etc.) with asphalt pavement on either side of the structure, the pavement shall be divided into two test sections (one test section on each side of the structure). Then, a minimum of one (1) core sample per pavement layer will required from each test section. **No Verification or Dispute Resolution core samples are required for Small Quanitities density acceptance.**

The Contractor shall be responsible for cutting cores for testing by the Department. These Small Quantity ("SQ") core samples will be taken in the presence of a DOT technician, and uniquely numbered (SQ-1, SQ-2, etc.). The SQ cores shall be delivered directly to the appropriate QA Lab by either a DOT technician or a Contractor's technician. In such cases where the cores will not be in the Engineer's possession during transport, the protocols of Section 10.7.1 for sealing and identification shall be followed.

Testing shall be completed and test results reported to the Contractor within 3 calendar days of the core samples being delivered to the QA Laboratory. The Dispute Resolution process will be done by jointly re-testing of all cores at an agreed-upon QMS laboratory.

For acceptance purposes, the results of the core samples will be averaged and compared to the minimum density specification for that mix type.

Figure 10-13

QA-5

NORTH CAROLINA DEPARTMENT OF TRANSPORTATION

12-17-02

REPORT OF QUALITY ASSURANCE CORE SAMPLE DENSITY RESULTS

PRIME PROJECT NO. 8.1234567 RESIDENT ENGINEER: I. B. DaMan

CONTRACTOR: Quality Paving DIVISION: 1 PLANT LOCATION: Everywhere, NC

CORE SAMPLE NO.	DATE PLACED	TYPE MIX	JMF NO.	MAP/ ROUTE NUMBER	STATION NUMBER	LANE DESCRIPT.	QA CORE RESULTS	QC CORE RESULTS	WITHIN LIMITS OF PRECISION	
									YES	NO
6R	5/28	I19.0C	99-001-051	US 17	16+30	Lt. NBL	92.8	93.4	✓	
3V	5/29	S9.5C	04-121-151	US 17	21+45	Rt. NBL	94.1	93.8	✓	
4V	5/30	S9.5C	04-121-151	US 17	60+18	Lt. NBL	91.7 *	92.4	✓	

CODE: "R" = Retest of QC Sample
"V" = Verification Sample

Distribution: 1. Original to Resident Engineer
2. FAX Copy to QC Lab
3. QC Lab to Forward Copy to NCDOT Roadway Technician

Rocky Road RD1 - 4273

**PRINT CERTIFIED QA ROADWAY TECHNICIAN'S NAME w/HiCAMS #

Rocky Road

**CERTIFIED QA ROADWAY TECHNICIAN'S SIGNATURE

Libby Lab P1S - 5378

**PRINT CERTIFIED QA LAB TECHNICIAN'S NAME w/HiCAMS #

Libby Lab

** CERTIFIED QA LAB TECHNICIAN'S SIGNATURE

**NOTE: BY PROVIDING THIS DATA UNDER MY SIGNATURE AND/OR HiCAMS CERTIFICATION NUMBER, I ATTEST TO THE ACCURACY AND VALIDITY OF THE DATA CONTAINED ON THIS FORM AND CERTIFY THAT NO DELIBERATE MISREPRESENTATION OF TEST RESULTS, IN ANY MANNER, HAS OCCURRED.

10.9 LIMITED PRODUCTION PROCEDURES FOR DENSITY GAUGE AND CORE SAMPLE FAILURES

The Contractor shall operate on a limited production basis if, for the **same mix type and contract,** one of the following items occurs (except as noted in the 1st paragraph below):

(1) Two consecutive failing lots, except on resurfacing*
(2) Three consecutive failing lots on resurfacing*.
(3) Two consecutive failing density gauge control strips.

*Resurfacing is defined as the first new uniform layer placed on an existing pavement.

As an exception to the above, pavement within each construction category (New and Other) as defined in Article 610-14, and pavement placed simultaneously by multiple paving operations will be evaluated independently for limited production purposes.

Once the Contractor is placed on limited production he shall remain on limited production for that **mix type** regardless of the plant or JMF. Recycled versions of the same mix will not be considered a different mix type. The Contractor may elect to produce a different mix design of the same mix type but must begin under limited production procedures. **As an exception**, the Engineer may grant approval to produce a different mix design of the same mix type if Quality Control and Quality Assurance plant mix test indicate the failing densities are attributed to the mix problem(s) rather than compaction related problems and limited production startup would not be required. The determination of whether a mix problem exists at this time will be made by QA personnel (normally the QA Supervisor). Should the Contractor elect to produce a different mix design of the same mix type, all of the previous mix in question that has not been tested with a correlated target density will be accepted based on the calculated target unless the Contractor elects to cut density acceptance cores**.**

Limited production is defined as the production, placement, and compaction of a sufficient quantity of mix to construct a 300 ft. control strip plus 100 feet of pavement adjacent to each end of the control strip.

The Contractor shall remain on limited production until such time as satisfactory density results are attained or two consecutive control strips have been attempted without achieving acceptable density test results, whichever occurs first. Should the Contractor fail to achieve satisfactory density at this point, production of that mix type shall cease until such time as the cause of the failing density test results can be determined. Unless otherwise approved, the Contractor will be required to place this mix type off the project limits for evaluation prior to the proceeding on the project.

When proceeding on limited production due to failing density for either density gauge or core control, the 500 feet of pavement, which includes the control strip, will be considered a lot. The average density of the five control strip cores will be used as the density result for acceptance of that lot in accordance with Article 610-14.

Quality control mix sampling and testing shall be performed at the frequencies detailed in Subarticle 609-6(B) of the Specifications, unless placing mix on a limited production basis due to failing densities. When on limited production, a minimum of a partial test series (including a new Maximum Specific Gravity test) shall be performed on the actual mix placed in each control strip. When a mix sample is obtained in conjunction with a control strip, that sample will not substitute for the next randomly scheduled QC mix sample for that tonnage increment, nor shall it be plotted on the control charts. However, all applicable plant mix tests results shall be reported to QA.

The maximum specific gravity (G_{mm}) used to calculate percent compaction for the control strip placed shall be the individual G_{mm} for the sample of mix taken from the mix incorporated into the control strip. If there is a G_{mm} change on the Job Mix Formula in accordance Section 7.4.3, all moving averages shall be re-established. Subsequent QC mix samples will be taken in accordance with normal random sampling procedures. When placing mix on a limited production basis, the contractor's QC plant personnel will notify roadway personnel from which truck the mix sample was taken. The notification method will be at the Contractor's option (radio, telephone, and note on load ticket, etc.) This load shall be included within the 300 ft. control strip.

If the Contractor does not operate by the limited production procedures as specified in the first paragraph of this section, all applicable failing lots and mix produced thereafter will be considered unacceptable. This material shall be removed and replaced with material which complies with the Specifications at no additional cost to the Department. Payment will be made for the actual quantities of materials required to replace the removed quantities, not to exceed the original amounts. The final in-place materials will be accepted in accordance with Article 105-3.

10.10 INDEPENDENT ASSURANCE (IA) SAMPLING & TESTING FOR DENSITY CONTROL

10.10.1 Density Gauge Correlation Program

This program is designed to provide assurance of the on-going proficiency of the QC/QA Density program with regards to density gauge testing procedures and equipment.

The IA Inspector shall visit the FHWA project and perform comparative tests at a frequency of not less than 20% of those performed by the Quality Control and Quality Assurance Inspectors.

The IA Inspector shall determine the location of the QC and QA test sections and randomly select the comparative test sections. This selection shall include only those QC and QA sections tested since the last visit. The IA Inspector shall keep a testing record, which shall show the QC and QA test sections on which comparative tests have been performed. Comparative testing can be performed on any section regardless of its acceptance status.

Once the comparative test sections have been determined the IA Inspector shall perform a comparative test at each test site in the test section. The gauge shall be placed in the same roller track with the body of the gauge in the same direction that the acceptance gauge was placed. The readings shall be taken with the testing depth at the same depth setting as the QC or QA gauge and the testing time shall be the same as the QC and QA test.

In order to obtain the control strip data the IA inspector must be at the control strip site when the control strip is placed. This makes communication between the QC personnel, QA personnel, and the IA Inspector critical. The IA Inspector shall be notified whenever a new control strip is placed, for whatever reason.

Prior to performing the tests the IA Inspector shall determine the control strip value used by the density inspector. This value shall be compared to the results obtained at each test site and the % compaction recorded. When the test section is completed the results shall be averaged and the average compared to the average obtained by the density inspector, according to the IAS Correlation Chart.

Any correlation that is greater than 3.0% shall be considered to be poor. All fair and poor ratings shall be investigated in an attempt to determine the reason for the disparity.

The IA Inspector shall operate the gauge in a manner consistent with the policies and procedures established by the Soils Laboratory Density Section.

10.10.2 Conventional Density Correlation Program

This program is designed to provide assurance of the on-going proficiency of the QC/QA Density program with regards to Conventional testing procedures and equipment.

The Independent Assurance Inspector shall visit the Division QA labs and randomly select 20% of the QA cores representing each mix type used on these projects. The core samples will be brought to the Materials and Tests Unit and tested for density.

The QA and IA results shall be correlated according to the IAS Correlation Chart. Any correlation that is greater than 0.06 shall be considered to be poor. All fair and poor ratings shall be investigated in an attempt to determine the reason for the disparity.

SECTION 11

PAVEMENT SMOOTHNESS / RIDEABILITY

11.1 PAVEMENT SMOOTHNESS

Pavement smoothness is an important consideration for several reasons. Studies have indicated that the prime factor that influences the user's opinion of a road is longitudinal roughness. Rough riding pavements generate complaints from motorists by providing uncomfortable rides, damaging vehicles, reducing travel speeds, and accelerating the wear of the pavement structure itself. Many believe that pavement roughness is an indicator of overall quality of workmanship by the Contractor. It is generally believed that if the Contractor provides a very smooth pavement, there is greater likelihood that good quality workmanship has been provided throughout the many steps of roadway construction that span the spectrum from subgrade preparation to rolling of the final surface layer. There is also a growing belief among pavement engineers that smooth pavements not only provide a higher level of service but also last longer than otherwise equivalent but initially rougher pavements. Because of these considerations, specifications have been developed in an effort to achieve smoother pavements. In some specifications, incentives and disincentives are provided, depending on the initial level of smoothness achieved during construction.

Roughness experienced by a roadway traveler is a function of pavement profile, vehicle speed, and various vehicle parameters, including tire and suspension characteristics. A variation in any of these factors can make a road profile appear either smooth or rough. From a passenger's viewpoint, roughness can be defined as an undesirable combination of road profile, vehicle parameters, and speed.

Pavement smoothness is adversely affected by a lack of uniformity in the paving operations, improper aggregate gradations, variation in mix temperature, variation in paver speed, improper operation of trucks, poor joint-construction practices, segregation, and improper rolling.

Stopping the paver can cause roughness in the pavement. Every time the paver stops, there is a possibility of the screed leaving a mark on the surface of the mat. If the screed settles into the mix, it causes the automatic sensor to act as if the paver has traveled into a depression. As the paver starts off, the screed lays a thicker mat. This continues until the sensor recognizes the excessive thickness and decreases the slope of the screed. Then a dip is developed until the screed levels out, approximately 30 feet (10 meters) from where the paver stopped.

Irregularities in the lower courses can usually be corrected by removing or adding material. In surface courses, the entire affected area may need to be removed promptly and sufficient new material placed to form a true and even surface. When the required smoothness is obtained on the first course or multi-layered pavements, the subsequent courses can usually be placed uniformly by simply setting the paver for the thickness required and proper use and operation of the automatic screed controls.

Rough pavements also result from changes in amounts of material introduced in front of the screed. If there is not enough material in front of the screed, the screed will drop. If there is too much material in front of the screed, it will rise. A uniform head of mix should be maintained at all times in front of the screed.

End of the load segregation, which is often times caused by emptying the paver hopper between loads, leaves a rough pavement surface texture. An adequate quantity of mix should be maintained in the paver hopper at all times during laydown operations to help prevent this problem.

11.1.1 Profile Testing

The importance of constructing a project to the plan profile and grade for driver safety and producing a smooth pavement which meets or exceeds the testing tolerances cannot be overemphasized. Deviations from the acceptable tolerances can result in expensive corrective actions and/or significant price adjustments. The methods of profile testing utilized by NCDOT to determine specification compliance are as follows:

1) Article 610-12 of the Specifications requires that any location on the pavement selected by the Department and all joints be checked using a 10 foot non-mobile straightedge and that the variation of the surface from the straightedge shall not exceed 1/8 inch between any two contact points. This requirement applies to all layers of mix not just the final surface. The 10-foot straightedge is furnished by the Contractor and must be used by both the Contractor and the DOT technician to assure that the surface at joints and all other pavement surfaces meet this requirement. The paving operation should not begin until this 10 foot straightedge is on hand at the paving site.

2) Article 610-13 of the Specifications requires that the finished pavement surface is tested using either an Inertial Profiler (Option 1) or the North Carolina Hearne Straightedge (Option 2). Contractor needs to submit in writing to the Engineer the selected option for smoothness acceptance testing before any paving operations begin. If Option 1 is selected, the Contractor shall furnish an Inertial profiler equipped with line laser technology to measure pavement

smoothness. The Specification applies only to the final surface course; however, the Contractor should not wait until the final layer before using one of these options for quality control purposes.

11.1.2 Details on the Inertial Profiler (Option 1) using IRI (International Roughness Index)

The International Roughness Index (IRI) is the roughness index obtained from measured longitudinal road profiles. It is calculated using a quarter-car vehicle math model, whose response is accumulated to yield a roughness index with units of slope (in/mi, m/km, etc.). IRI has become the road roughness index most commonly used worldwide for evaluating and managing road systems. Inertial profilers measure the pavement surface profile using a distance measurement transducer, noncontact vertical displacement transducer (which NCDOT requires line laser technology), an accelerometer, and a computer. The distance measurement transducer operates similarly to a car's odometer, but is more precise. The noncontact vertical transducer measures the distance from the device and the pavement surface at selected intervals. The accelerometer determines the inclination of the profiler as it ascends and descends hills and corrects for any movement of the vertical displacement transducer relative to the ground caused by the suspension. The computer collects and records all the data from the devices and uses it to calculate the IRI index to describe the ride quality of the pavement.

The system, the operator, and the testing requirements for inertial profilers are covered in several standards from AASHTO and ASTM: AASHTO M328, ASTM E1926, AASHTO R56, and AASHTO R57, and are referenced in the NCDOT Standard Specifications.

The equipment should be configured per the manufacturer's recommendations and to record actual elevation of the pavement surface. The profiler's internal IRI calculation mode should not be used. The software is required to produce electronic inertial road profiles in a format compatible with the latest version of FHWA's ProVAL (Profile Viewing and Analysis software). The Contractor shall provide raw data to the Engineer after each run. The profile data shall be filtered with a cutoff wavelength of 300 feet. The interval at which relative profile elevations are reported can be approximately 2".

FHWA's ProVAL software will be used to analyze the raw data. Contact the Materials and Tests Unit for assistance with the ProVAL software and reviewing data. The Contractor shall also submit a formal report with the details as required in the specification. Pay adjustments will be based on MRI values, which is the average of the IRI values for the left and right wheel path for every 0.10-mile section. See the Construction Manual for a step-by-step checklist for Contractor and Department responsibilities.

11.1.3 Final Surface Testing – Asphalt Pavements – Specifications

Refer to ARTICLE 610-13 of the *2012 Standard Specifications* and any associated Special Provisions.

Based on the *2012 Standard Specifications*, Final Surface Testing (FST) is required on all projects. The following criteria are used to exclude FST on a project:

1) Project is located on an SR route;
2) Any route where the speed limit is less than 45 mph; and
3) Project is less than one mile in length;
4) When existing conditions make it impractical to obtain rideability as determined by the Division. (Considerations may include pavement width, traffic phasing constraints, type of facility, and large number of utility adjustments, driveways, or -Y-lines.)

Since 2012, projects that have the above criteria will have a provision that states the following:

"Final Surface Testing is not required on this project."

(A) Option 1 – Inertial Profiler

(1) Acceptance for New Construction

IRI and MRI numbers recorded in inches per mile will be established for each 0.10-mile (528 feet) section for each travel lane of the surface course designated by the contract. Inertial profiler will not be required on ramps, loops, and turn lanes.

Areas excluded from testing by the profiler will be tested using a 10-foot straightedge in accordance with Article 610-12. Table 610-7 provides the acceptance quality rating scale of pavement based on the final rideability determination:

TABLE 610-7 MRI PRICE ADJUSTMENT PER 0.10-MILE SECTION	
MRI after Completion (Inches Per Mile)	**Price Adjustment Per Lane (0.10-Mile Section)**
45.0 and Under	$200.00
45.1-55.0	PA = 600 – (10 * MRI)
55.1-70.0	Acceptable (No Pay Adjustment)
70.1-90.0	PA = 650 – (10 * MRI)
Over 90.1	Corrective Action Required

This price adjustment will apply to each 0.10-mile section or portion thereof prorated based on the Mean Roughness Index (MRI), the average IRI values from both wheel paths.

(2) Localized Roughness

Localized roughness areas are isolated short sections of roughness detected by the inertial profiler. These areas are analyzed and identified in the ProVAL software and corrected separately.

Areas of localized roughness shall be identified using the "Smoothness Assurance Module" (SAM) provided in the ProVAL software. Use the "Smoothness Assurance Module" to optimize repair strategies by analyzing the measurements from profiles collected using inertial profilers. The ride quality threshold for localized roughness shall be 165 in/mile for any sections that are 15 to 100 feet in length at the continuous short interval of 25 feet.

Submit a continuous roughness report to identify sections outside the threshold and identify all localized roughness based on Station numbers or reference points with the signature of the Operator included with the submitted IRI trace and electronic files.

The Department may require that corrective action be taken regardless of final IRI. Re-profile the corrected area to ensure that the corrective action was successful. If the corrective action is not successful, the Department may assess a pay adjustment based on the formula below, or require additional corrective action.

Corrective work for localized roughness shall be approved by the Engineer before performing the work and shall consist of either replacing the area by milling and inlaying or other methods approved by the Engineer. Any corrective action performed shall not reduce the integrity or durability of the pavement that is to remain in place. Milling and inlay or any corrective actions shall meet the specifications requirements for ride quality over the entire length of the correction. Notify the Engineer five (5) days before commencement of the corrective action.

If the Engineer does not require corrective action, the pay adjustment for localized roughness shall be based on the following formula:

PA = (165 - LR#) X 5

where, PA = Pay Adjustment (this is a negative pay adjustment)

LR# = The Localized Roughness number from the ProVAL data for any sections beyond the threshold criteria of 165 in/mile for any sections that are 15 feet to 100 feet in length

EXAMPLE: For a Localized Roughness number of 275 in/mile, the pay adjustment is as follows:

PA = (165 – 275) X 5 = (-110) X 5 = -$550

Localized roughness correction work shall be for the entire traffic lane width. Pavement cross slope shall be maintained through corrective areas.

(B) Option 2 – North Carolina Hearne Straightedge

At the beginning and end of each day's testing operations, and at such other times as determined by the Engineer, operate the straightedge over a calibration strip so that the Engineer can verify correct operation of the straightedge. The calibration strip shall be a 100 foot section of pavement that is reasonably level and smooth. Submit each day's calibration graphs with that day's test section graphs to the Engineer. Calibrate the straightedge in accordance with the current NCDOT procedure titled *North Carolina Hearne Straightedge - Calibration and Determination of Cumulative Straightedge Index*. Copies of this procedure may be obtained from the Department's Materials and Tests Unit.

Upon completion of each day's testing, evaluate the graph, calculate the Cumulative Straightedge Index (CSI), and determine which lots, if any, require corrective action. Document the evaluation of each lot on a QA/QC-7 form. Submit the graphs along with the completed QA/QC-7 forms to the Engineer, within 24 hours after profiles are completed, for verification of the results. The Engineer will furnish results of the acceptance evaluation to the Contractor within 48 hours of receiving the graphs. In the event of discrepancies, the Engineer's evaluation of the graphs will prevail for acceptance purposes. The Engineer will retain all graphs and forms.

The pay adjustment schedule for the Cumulative Straightedge Index (CSI) test results per lot is in Table 610-8.

TABLE 610-8
PAY ADJUSTMENT SCHEDULE FOR CUMULATIVE STRAIGHTEDGE INDEX
(Obtained by adding SE Index of up to 25 consecutive 100 ft test sections)

CSI[A]	Acceptance Category	Corrective Action	Pay Adjustment Before Corrective	Pay Adjustment After Corrective Action
0-0	Acceptable	None	$300 incentive	None
1-0 or 2-0	Acceptable	None	$100 incentive	None
3-0 or 4-0	Acceptable	None	No Adjustment	No Adjustment
1-1, 2-1, 5-0 or 6-0	Acceptable	Allowed	$300 disincentive	$300 disincentive
3-1, 4-1, 5-1 or 6-1	Acceptable	Allowed	$600 disincentive	$600 disincentive
Any other Number	Unacceptable	Required	Per CSI after Correction(s) (not to exceed 100% Pay)	

A. Either Before or After Corrective Actions

Furnish the North Carolina Hearne Straightedge(s) necessary to perform this work. Maintain responsibility for all costs relating to the procurement, handling, and maintenance of these devices. The Department has entered into a license agreement with a manufacturer to fabricate, sell, and distribute the N.C. Hearne Straightedge. The Materials and Tests Unit may be contacted for the name of the current manufacturer of the straightedge.

The current manufacturer of the Hearne Straightedge is listed below.

Manufacturer:	**Myers Tool and Machine**	
Mailing Address:	P. O. Box 219	Linwood, NC 27299
Shipping Address :	156 Dixon Street	Lexington, NC 27295
Phone/Fax:	336-956-1324	336-956-1169 (Fax)

11.1.4 <u>Calibration of the Hearne Straightedge</u>

The straightedge must be operated over a calibration a strip at the beginning and end of each day's testing operations. The purpose of calibration is to ensure the straightedge is recording both vertical deviations and horizontal distances accurately. The calibration strip will consist of a 100 foot section of pavement that is reasonably level and smooth on which plywood or other approved sheets of known dimensions are placed at known intervals.

Items needed to prepare the calibration strip include: 100 foot measuring device, two sheets of 2' x 4' x ¼" approved material, one sheet of 2' x 4' x ½" approved material, and marking paint, chalk, or crayon. Note that the three

sheets can be exterior plywood, Plexiglas, plastic, aluminum or other approved material. The approved material should be kept in a protected location so it will remain flat and not warp. For approval of other material than those mentioned above contact the Materials and Tests Unit.

To set up the calibration strip, the plywood sheets should be placed at exactly 50 foot intervals as shown in Figure 11-1. The profile of this strip (profilograph) is then obtained with the straightedge using normal testing procedures. The profilograph of the calibration strip will indicate the profiles of the three approved sheets superimposed on the pavement surface profile. The shape of the graph should reflect the thickness of the plywood sheets and all horizontal distances, including the two foot widths of the plywood. The distance from the first to last sheet of plywood should be 100 ft. (approximately 4 inches on the graph) If the recorded distance on the graph is not within 1/4" of 4" then either the recording wheel is worn and should be replaced or the graph paper is not feeding properly into the recorder. The 1/4" and 1/2" sheet thickness should be represented exactly on the graph. If the thickness is not recorded accurately, the linkage between the recording wheel and pen is not operating correctly, and will require adjustment or repair. The Contractor should ensure that the straightedge is operating correctly before testing is conducted. If the end of day calibration strip indicates that the straightedge is not recording accurately, all necessary adjustments or repairs shall be made, and all test sections since the last acceptable calibration strip must be retested.

Figure 11-1
Calibration Strip
(Not to Scale)

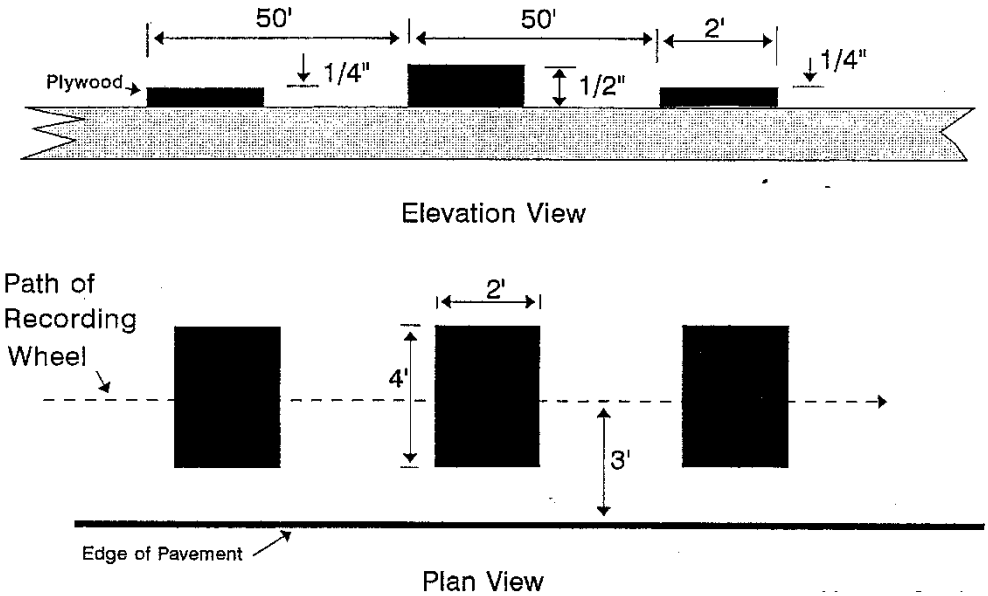

11.1.5 <u>Determination of the Cumulative Straightedge Index</u>

Profiles are taken and recorded on graphs for the entire length of travel lane pavement exclusive of -Y- line travel lanes less than or equal to 1000 feet in length, turn lanes less than or equal to 1000 feet in length, structures, approach slabs, paved shoulders, loops, tapers and other irregular areas. Full width acceleration or deceleration lanes, -Y- line travel lanes greater than 1000 feet in length, ramps greater than 1000 feet in length, full width turn lanes greater than 1000 feet in length, and collector lanes will also be tested in accordance with the "Final Surface Testing - Asphalt Pavements" specification. Ramps may be combined with the adjoining acceleration/deceleration lanes for testing purposes, subject to the Engineer's approval. Turn lanes and collector lanes shall be tested for the entire length of full width pavement.

When a bridge is encountered on the project, the pavement should be rolled up to the point where the front wheel is on the approach slab. When coming off of a bridge, rolling should begin at the point where the rear wheel is on the joint at the approach slab. While deviations at the bridge approach slabs are not counted, they are subject to meeting the requirements of the non-mobile 10 foot straightedge.

The contractor has the option of rolling either the left wheel path or the right wheel path for lanes adjacent to curb and gutter, expressway gutter, or shoulder berm gutter. Rolling of the left wheel path is only allowed for test

sections where the lane is directly adjacent to either the curb and gutter, expressway gutter, or shoulder berm gutter. Only one wheel path should be rolled for each lane.

The graph from the North Carolina Hearne Straightedge may be read by use of either a desktop reader box specifically designed for this purpose or by use of appropriate blanking bands printed on transparency paper. Contractors may purchase the reader box from the manufacturer of the N. C. Hearne Straightedge, whereas the Department will furnish reader boxes to DOT field personnel. Both the Contractor and DOT field personnel may obtain blanking bands printed on transparency paper from the NCDOT Materials and Tests Unit. The Contractor shall furnish each day's graph and appropriate QA/QC-7 form to the Engineer within 24 hours after the profiles are taken. The graph is first prepared for evaluation by marking station numbers in 100 foot increments. Actual station numbers should be shown on the graph; for example, 0+00, 1+00, 2+00, etc. Each 100 foot test section will be evaluated separately with 25 consecutive test sections being accumulated to evaluate a lot.

Three different blanking bands are used to evaluate the graph. The widths of these blanking bands are 0.2", 0.3", and 0.4". The graph is first evaluated using the 0.2" band; next, the 0.3" band; and lastly with the 0.4" band. Each blanking band is placed over a 100 foot test section graph such that it covers as much of the pavement profile line as possible. Each band may be maneuvered, both vertically and diagonally, as needed, to accomplish this. Care should be taken in any attempted diagonal movement of the reader box blanking bands since these were not intended to be moved diagonally. Once a blanking band position is selected, the total test section length must be read with the band in that position. The blanking band must be placed at the same vertical location at the beginning of a test section, as it was located at the end of the last adjoining test section. The graphs should be viewed from directly above and perpendicular to the graph for evaluation.

Double peaked or multiple peaked deviations which do not go back into the blanking band are only counted once (See Figure 11-4). Spikes are very sharp, almost vertical deviations, showing very little, if any, "white area". Spikes are not counted since these are normally an indication of rocks or dirt on the pavement (See Figure 11-5). If a deviation occurs at the end of a test section, count the deviation only once. Place the deviation in the 100 foot test section where the peak is the highest (See Figure 11-6). There may also be obvious deviations that may not be counted, such as manholes, valve boxes, etc. These should be marked on the graph by the operator at the time of testing, along with any other pertinent comments. While deviations of this type are not counted, they are subject to meeting the requirements of the non-mobile 10 foot straightedge.

The Straightedge Index (SEI) is a number determined by evaluating the graph using 0.2" and 0.3" blanking bands. This SEI indicates the number of deviations that exceed the 0.2" band and the 0.3" band within each 100 foot test section. The number of 0.4" blanking band deviations are not indicated in either the SEI or the CSI numbers, but they are included in the 0.2" and 0.3" deviations. The Cumulative Straightedge Index (CSI) is a number representing the total of the SEIs for one lot which consists of 25 consecutive 100 foot test sections.

To determine the SEI, the 0.2" blanking band is first placed over a 100 foot test section. All deviations in excess of the 0.2" blanking band, both above and below the band, will be counted. Deviations must be significant enough to show "white areas" outside the blanking band in order to be counted. Mark each deviation exceeding the 0.2" band with a short vertical line (tick mark) just above the peak of the deviation. The number of deviations exceeding the 0.2" blanking band in a 100 foot test section will be the first number of the Straightedge Index (SEI).

The 0.3" blanking band is then placed over the 100 foot test section and all deviations exceeding this blanking band will be counted. Again, include all deviations both above and below the blanking band, with only deviations showing "white areas" outside the blanking band being counted. Mark each deviation exceeding the 0.3" blanking band with another short vertical tick mark placed just to the right of the tick mark for the corresponding 0.2" deviation. The number of deviations exceeding the 0.3" blanking band in a 100 foot test section will be the second and final number of the SEI. The SEI for each 100 foot test section should be written above that same test section and circled.

In Figure 11-2, there are 2 deviations that exceed the 0.2” blanking band and 1 that exceeds the 0.3” blanking band; resulting in a SEI of 2-1.

Figure 11-2
(Not to Scale)

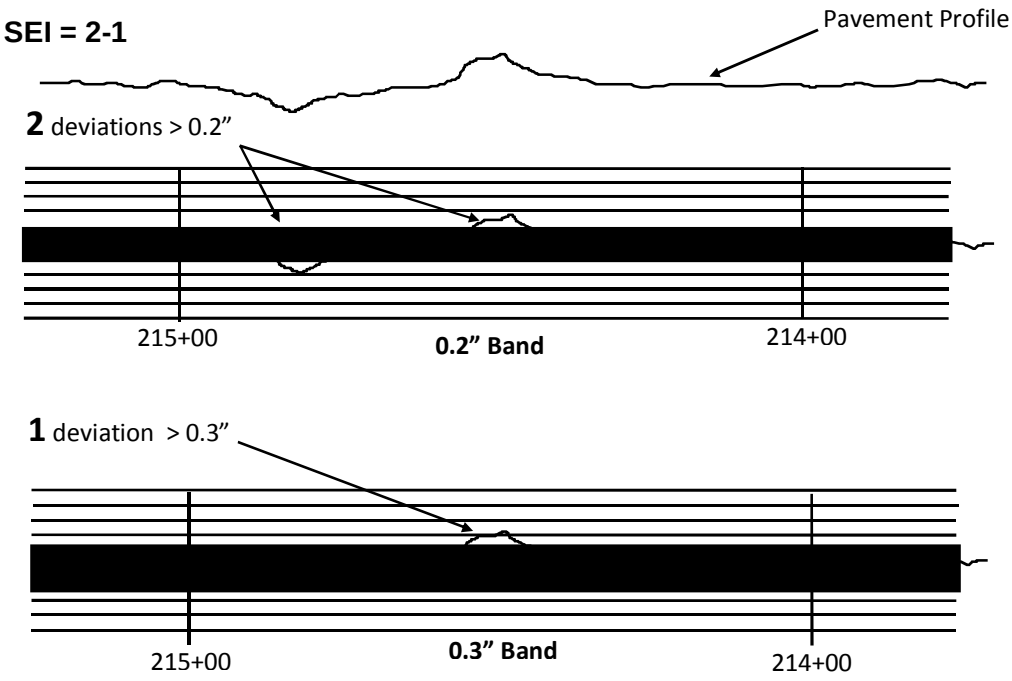

In Figure 11-3, there is one deviation in excess of the 0.2” blanking band and none that exceed the 0.3” blanking band; resulting in a SEI of 1-0.

Figure 11-3
(Not to Scale)

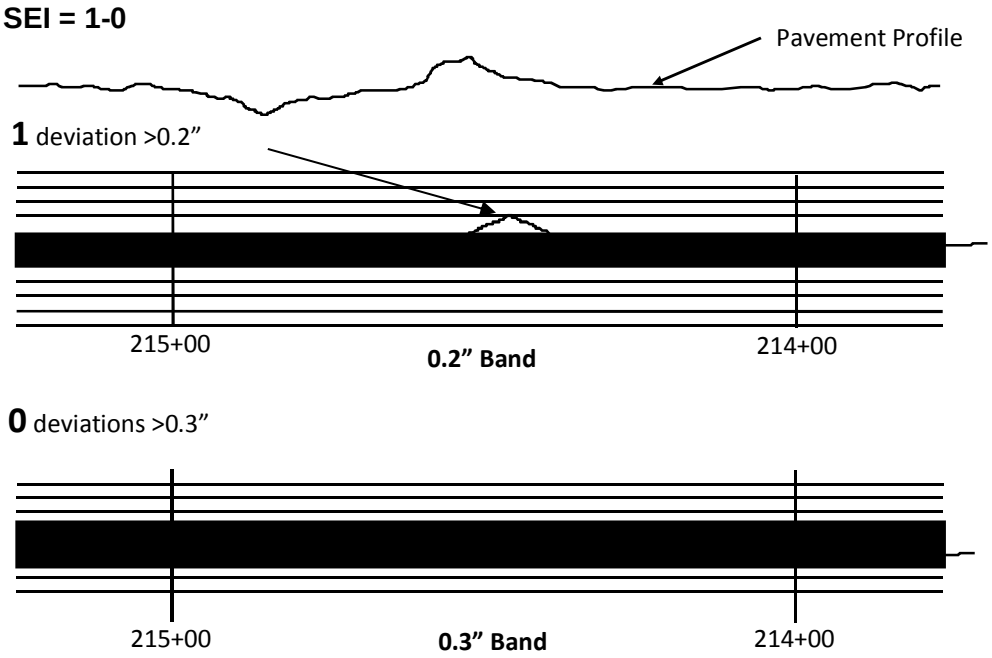

Figure 11-4
(Not to Scale)

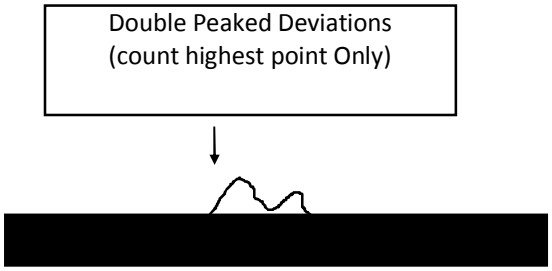

Figure 11-5
(Not to Scale)

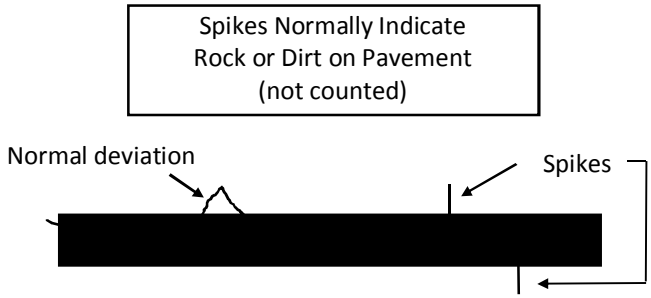

Figure 11-6
(Not to Scale)

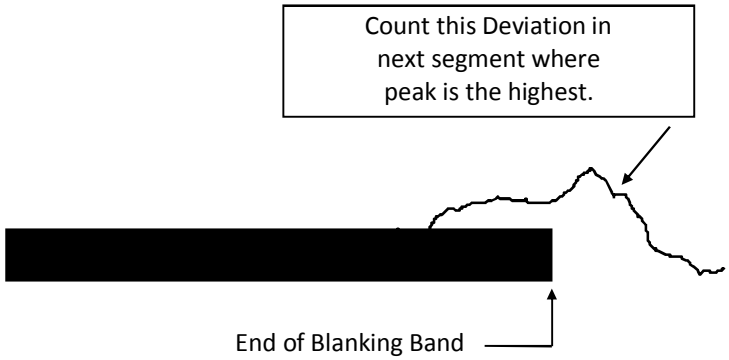

The 0.4" blanking band is now placed over the 100 ft. test section to check for "must correct" deviations. All deviations exceeding the 0.4" blanking band should be marked with another short vertical tick mark just to the right of the corresponding 0.3" deviation mark. Only deviations showing "white area" on either side of the blanking band will be marked. All deviations exceeding the 0.4" blanking band must be corrected in accordance with the provisions of the specifications (equal to or less than 0.3”). These 0.4" deviations do not change the initial SEI determined using the 0.2" and 0.3" blanking bands.

Test sections will normally be evaluated between even 100 ft. station numbers: for example: 1+00 to 2+00. However, there may be partial test sections that occur either at the beginning or ending of lanes, projects, bridges; or on acceleration or deceleration lanes, ramps, turn lanes or collector lanes. For example, the beginning station on a project is 1+12. It is recommended to make a partial test section from Station 1+12 to 2+00. Another example would be a lane ending at Station 20+55 which means that a 55 ft. test section is left at the end. These partial test sections will be tested, evaluated, and a SEI determined. This SEI will be included in the applicable CSI as if it were a full test section. This may occur at the beginning or end of a project, the beginning or ending of a bridge, on acceleration or deceleration lanes, on ramps, on turn lanes, or on collector lanes, but in all cases will be handled the same as described above.

Partial end of the day test sections less than 100 ft. will be carried forward and evaluated with the next day’s production, unless it occurs on the last day’s production which was covered above. In these cases, the straightedge should be stopped on the last even 100 ft. station number each day with the straightedge rolling process resumed at that point on the following day’s production. For example: If paving stops at Station 88+45 one day, the straightedge testing would stop at Station 88+00 and resume at Station 88+00 the following day.

Form QA/QC-7 is used to compile the SEIs and determine the CSI for a 2500 foot lot or partial lot. An example of this form is shown in Figure 11-7. A QA/QC-7 form with numbered instructions is also included in Section 11 of this manual. The 0.2" deviations and 0.3" deviations are added separately, with these two totals forming the Cumulative Straightedge Index (CSI). The 0.2” deviations are added first and the result recorded. Do not carry over, as done in normal addition, instead record the total number of 0.2” deviations. Repeat this process for the 0.3” deviations. In Figure 10-7, the total SEIs for 0.2" deviations is 10 and the total for 0.3" deviations is 3. The CSI for that lot is 10-3. The total 0.3" deviations must be equal to or less than the total 0.2" deviations within a lot.

Pavement will be accepted on a lot by lot basis. A lot will normally consist of 25 consecutive test sections as described previously, except that separate lots will be established for each travel lane, unless otherwise approved by the Engineer. For example, if two adjoining travel lanes were paved from the beginning of the project, Station 0+00, to the end of the project, Station 24+50, these would normally be tested as two separate lots, unless otherwise approved by the Engineer. If the Contractor would request to continue the lot of the first lane paved to include the first 50 ft. of the second lane, the Engineer should evaluate such a request and approve or disapprove it to the best of his judgment. In addition to the above specified lots, full width acceleration or deceleration lanes, ramps, collector lanes & turn lanes will be evaluated as separate lots and not included with travel lanes.

Once the CSI for a lot or partial lot has been determined, it will be compared to the specification requirements to see which pay adjustment, if any, is applicable or if corrective actions are necessary.

If after the placement of a pavement layer, a lot is less than 2500 ft., any applicable incentive shall be prorated over that section. For example, if a lot were 1250 ft. in length with a CSI of 1-0, an incentive of $50 would be paid for that partial lot. This is determined by dividing the actual test section length of 1250 ft. by 2500 ft. and multiplying that result times the incentive of $100, which would have been the incentive for a full section with a CSI of 1-0. Partial lots for normal travel lanes, acceleration or deceleration lanes, ramps, collector lanes & turn lanes will all be prorated according to this procedure. Any disincentive for partial lots of any type shall be applied in full and shall not be prorated, regardless of length.

Test sections and/or lots that are initially tested by the Contractor which indicate excessive deviations such that either a disincentive or corrective action is necessary, may be rerolled with asphalt rollers, while the mix is still warm and in a workable condition, to possibly correct the problem. No other corrective action will be permitted at that time. If the area is rerolled, retesting of the area in question must be within 24 hours of pavement placement and shall begin at the last even 100 foot station number prior to the area to be retested. For example: if the Contractor elected to reroll a section of pavement between Sta. 21+60 and Sta. 24+10 with the asphalt rollers, the retesting of that area should begin at Sta. 21+00. The graph for the retested area(s), with appropriate remarks on it, must be submitted to the Engineer for evaluation and acceptance. In this case, both the Contractor and the Engineer evaluating the graph should enter the SEI after retesting as the initial results on the QA/QC-7 Form.

If the final graph indicates “must correct” deviations in excess of 0.4" exists, appropriate corrective actions shall be performed by the Contractor. Where corrective action is performed, the lot will be retested and accepted provided that the retesting shows the lot to have an “Acceptable” CSI. If the CSI is 4-0 or better, no rideability incentive or disincentive will be applied to that lot. If after the corrective action, the retesting indicates a CSI that warrants a disincentive (CSI of either 1-1, 2-1, 3-1, 4-1, 5-0, 5-1, 6-0 or 6-1), the appropriate disincentive will be applied for that lot. If after initial corrective actions are taken, the retesting indicates that further corrective actions are required, the Contractor shall take whatever measures necessary to obtain an “Acceptable” CSI. All corrective actions, except those for minor deviations, shall have the prior approval of the Engineer. The CSI obtained after the final corrective action will determine the pay factor for that lot, not to exceed 100%.

Figure 11-7

12/17/2002 **NORTH CAROLINA DEPARTMENT OF TRANSPORTATION** QA/QC-7

DIVISION OF HIGHWAYS

N.C. Hearne Straightedge Summary

Project No.: 8.1234567 Route: I-40 Division: 7

Type Mix: S 12.5 C Lane: WBL Rt Profile Location: Outside Wheelpath

Paving Contractor: Old Smoothie Paving S.E. Operator: C. D. Bumps

Date	T.S. #	Beg. Station No.	End. Station No.	S.E.I.	0.4" Dev.	Retest SE	Comments
9/21/2002	1	1+12	2+00	3-2	1	2-0	0.4" @ 1+32
9/21/2002	2	2+00	3+00	1-0		0-0	
9/21/2002	3	3+00	4+00	0-0		0-0	
9/21/2002	4	4+00	5+00	0-0		0-0	
9/21/2002	5	5+00	6+00	0-0		0-0	
9/21/2002	6	6+00	7+00	0-0		0-0	
9/27/2002	7	7+00	8+00	1-0		0-0	
9/27/2002	8	8+00	9+00	0-0		0-0	
9/27/2002	9	9+00	10+00	0-0		0-0	
9/27/2002	10	10+00	11+00	0-0		0-0	
9/27/2002	11	11+00	12+00	0-0		0-0	
9/27/2002	12	12+00	13+00	1-0		0-0	
9/27/2002	13	13+00	14+00	0-0		0-0	
9/27/2002	14	14+00	15+00	0-0		0-0	
9/28/2002	15	15+00	16+00	0-0		0-0	
9/29/2002	16	16+00	17+00	1-0		1-0	
9/29/2002	17	17+00	18+00	0-0		0-0	
9/29/2002	18	18+00	19+00	0-0		0-0	
9/29/2002	19	19+00	20+00	1-0		0-0	
9/29/2002	20	20+00	21+00	2-1	1	1-0	0.4" @ 20+48
9/29/2002	21	21+00	22+00	0-0		0-0	
9/30/2002	22	22+00	23+00	0-0		0-0	
10/1/2002	23	23+00	24+00	0-0		0-0	
10/2/2002	24	24+00	25+00	0-0		0-0	
10/3/2002	25	25+00	26+00	0-0		0-0	
			C.S.I.	10-3	C.S.I.	4-0	

Note 1:
Resident Engineer to furnish gold copy to M&T Unit upon completion of Federal Aid Projects only.

*Note 2:
Contractor Must be notified by letter of any Pay Adjustments or Corrective Actions.

*Print Name Legibly: U. Ride Goode

*Evaluators Signature: U. Ride Goode

*BY PROVIDING THIS DATA UNDER MY SIGNATURE AND/OR HiCAMS NUMBER, I ATTEST TO THE ACCURACY AND VALIDITY OF OF THE DATA CONTAINED ON THIS FORM AND CERTIFY THAT NO DELIBERATE MISREPRESENTATION OF TEST RESULTS, IN ANY MANNER, HAS OCCRRED.

CC:
White: Resident Engineer
Yellow: Pavement Construction Engineer
Pink: Division Engineer
Gold: Resident Engineer(See Note 1)

Resident/District Engineers Certification

Block	Check One
$300 Incentive	☐
$100 Incentive	☐
Acceptable	☐
*$300 Disincentive	☐
*$600 Disincentive	☐

Resident/District Engineer: May B. Knott, P.E.

Remarks:
0.4" deviations repaired @ Sta's 1+32 & 20+48

SECTION 12

RECORDS AND REPORTS

12.1 GENERAL INFORMATION

One of the most important functions of both QC and QA Technicians is to keep accurate records and reports. Records and reports are necessary to determine compliance with contract requirements and to document payments to the Contractor.

The Technician is furnished standard forms for routine reporting which may require daily, weekly, or monthly reporting, depending on the data to be submitted. These reports must always be completed in entirety. In addition to the standard forms, the Technician, both QA and QC should keep a written narration in a permanent field record (diary) of the principal activities that occur. The record should contain all information concerning the work being inspected, including information such as weather conditions, important conversations, visitors on site, verbal orders received, unusual incidents, equipment breakdowns, length of work stoppages, number of personnel and types of equipment affected by work stoppages. If an item seems unusually important, it should be recorded and analyzed in sufficient detail to make it fully understandable at some later date.

The importance of entries listed on records and reports or in the Technician's diary cannot be over-emphasized. The information recorded may never be needed or reviewed, but, if it is ever needed, it will be extremely useful. This information may serve as a reference for performance of similar future work, a reference in the event of legal action or litigation by any affected party, and, possibly most important, a source of clues for investigators in the event the job fails.

Most forms and reports will be assigned a QC, QA, QA/QC or QMS form number. QC forms will be used only by the Contractor's quality control personnel, QA forms only by the Department's quality assurance personnel, QA/QC and QMS forms will be used at times by both parties. The Department will furnish all QC, QA, QA/QC and QMS forms. The Division QA Supervisor is responsible for distributing all needed forms to the Contractor and maintaining a reasonable supply at the Division QA Lab.

The Contractor's QC data must be submitted on Department approved forms. The data may be in printed or handwritten form.

Beginning in 2010, QA and QC data was entered into a Quality Assurance Program (QAP). The data was logged into a database within the Department's HiCAMS application. There is now a web interface for the Contracting Industry to access this application to enter their "raw" test data from each QC Laboratory. During 2010 transition period, the QA Laboratories submitted QC and QA Test results just as they had with the previously used QMS Spreadsheets.

Beginning with 2011, QC & QA Laboratories will have to submit their test results into the QAP database via the web interface. This web interface is found at the following web address:

https://connect.ncdot.gov/resources/Materials/MaterialsResources/QAP%20Login%20Access.aspx

In order to access this portal, you have to register and receive an NCID and password. Once the test data / results are submitted into the QAP, test reports and graphs will be available for viewing and/or printing.

12.2 RECORDS AND REPORT DOCUMENTATION

The Contractor shall document all observations, records of inspection, samples taken, adjustments to the mix, and test results on a daily basis. Results of observations and records of inspection shall be noted as they occur in a permanent field record. Adjustment to mix production and test results shall be recorded on forms provided by the Engineer. The Contractor shall maintain on a daily basis copies of all test worksheets, the "Moving Average Calculation Sheet" for gradation, % AC, and mix properties and all control charts as specified in the "Quality Management System, Asphalt Plant Mix Pavements" Specification. **There should be no erasures, whiteout or other similar means used to correct an error on any field record entries, test worksheets, or any other QMS forms. Entries that have been made in error on any QMS form should be struck through with a single line and the initials of the individual voiding the entry noted. Corrected entries should be placed immediately above the voided entry.**

All such records shall be made available to the Engineer, upon request, at any time during project construction. All QC records and forms shall be completed and distributed in accordance with the most current edition of the Department's "Asphalt QMS Manual". The Contractor shall maintain all required QC records by day's production for each plant site in a well-organized manner such that these records may be easily reviewed.

Failure to maintain QC records and forms as required, or to provide these records and forms to the Engineer upon request, may result in production stoppage until the problem is resolved.

12.3 RETENTION OF QMS FORMS

All QMS forms and reports shall be completed and distributed in accordance with the following detailed instructions for each form. The Contractor's QC forms, with required supporting documents, shall be retained by the Contractor for at least three (3) years after completion of the forms. For required supporting documentation, reference should be made to the instructions for each individual form contained in the remainder of this section. The Department's QA forms shall be stored indefinitely by the QA Labs unless permission is given otherwise. The Materials & Tests Asphalt Lab may be contacted for any questions and/or guidance concerning retention time for each individual form.

12.4 FALSIFICATION OF RECORDS

Falsification of test results, documentation of observations, records of inspection, adjustments to the process, discarding of samples and/or test results, or any other deliberate misrepresentation of the facts will result in the revocation of the applicable person's QMS certification. In addition, state and/or federal authorities may also pursue criminal charges. The Engineer will determine acceptability of the mix and/or pavement represented by the falsified results or documentation. If the mix and/or pavement in question is determined to be acceptable, the Engineer may allow the mix to remain in place at no pay for any asphalt mix, binder, or other mix components. If the mix and/or pavement represented by the falsified results is determined not to be acceptable, it shall be removed and replaced with mix that meets the Specifications. In this case, payment will be made for the actual quantities of materials required to replace the quantities represented by the falsified results or documentation, not to exceed original quantities of the mix removed.

12.5 FORMS AND INSTRUCTIONS

The following pages are copies of all forms and reports to be used, along with detailed instructions on how to complete each form or report. Computer generated forms that are the exact same as these are also acceptable.

SUMMARY OF ALL QMS FORMS WITH INSTRUCTIONS

	QA/QC FORMS	***PAGE***
QA/QC-1	Hot Mix Asphalt QC Test Worksheet (G_{mm} by Rice Test)	12-4
QA/QC-1A	Hot Mix Asphalt QC Test Worksheet (G_{mm} by CoreLok Method)	12-8
QA/QC-3	Determination of Asphalt Draindown Characteristics	12-12
QA/QC-4	Rice Test Dry Back Correction Factor Worksheet	12-14
QA/QC-5	Roadway Core Sample Worksheet	12-16
QA/QC-5A	CoreDry Core Sample Density Determination Worksheet	12-18
QA/QC-5B	Oven Dry Core Sample Density Determination Worksheet	12-20
QA/QC-6	HMA Quality Control Chart	12-22
QA/QC-7	Straightedge Summary Sheet	12-24
QA/QC-8	Daily Paving Operation Evaluation Form	12-26
M&T 612	TSR Worksheet	12-28
Graph	0.45 Power Chart	12-30
	QC FORMS	***PAGE***
QC-1	Daily HMA Quality Control Certification	12-32
QC-2	Scales Calibration Worksheet	12-34
QC-3	Anti-Strip Log Sheet	12-36
QC-4	Gradation Moving Average Worksheet	12-38
QC-5	Daily Core Sample Location & Lot Summary	12-40
QC-6	Mix Properties Moving Average Worksheet	12-44
QC-7	Sample Tag	12-46
QC-9	QC Random Mix Sample Location Worksheet	12-48
QC-11	Mix Verification Checklist	12-50
	QA FORMS	***PAGE***
QA-1	Asphalt Quality Assurance Summary Report	12-52
QA-2	HMA Acceptance Certification	12-54
QA-2A	Mix Deficiency Pay Factor Form	12-56
QA-2B	Density Deficiency Pay Factor Form	12-58
QA-3	QA Sample Log	12-60
QA-4	QA Inspection of QC Plant and Laboratory Facilities	12-62
QA-5	Report of QA Core Sample Density Results	12-64
	QMS FORMS	**PAGE**
QMS-6	Job Mix Formula Change Request Form	12-66
QMS-7	Asphalt Plant Scale Verification Form	12-68

QA/QC-1 Rev

NORTH CAROLINA DEPARTMENT OF TRANSPORTATION
HOT MIX ASPHALT QUALITY CONTROL TEST WORKSHEET

9/23/2009

Type Mix:	[1]	QC Sample Date:	[4]	JMF Pba:	[7]	MD Gb:	[10]
Plant Location:	[2]	QC Sample No.:	[5]	JMF Gse:	[8]	Calculated Gse:	[11]
Plant Cert No:	[3]	JMF No.:	[6]	JMF Gsb:	[9]	Corrected Gsb:	[12]

Dry & Pan Weights		Pan Wt. <0.2% of Dry Wt. After Sieving?
Agg Wt after Ignition	[13]	
Dry Wt after Wash	[14]	
Pan Weight	[15]	
% Loss from Sieving	[16]	[17]

Furnace Weights		Furnace Scale Within 5.0 grams?
Basket + Mix	[18]	
Basket Wt.	[19]	
Total Mix Wt.	[20]	
Furnace Readout	[21]	[22]

%Binder (Pb)	
JMF %Binder	[23]
% Binder from Burn	[24]

Moisture Content	
Mix Sample Weight	[25]
Mix Dry Weight	[26]
Mix % Moisture	[27]

VMA	[51]
VFA	[52]
%Gmm@Nini	[53]
Po.075 / Pbe Ratio	[54]

Gradation Data (all weights are after burn weights)

SIEVE	Accumulated Weight	Percent Retained	TOTAL % PASSING			JMF
37.5 mm	[28]	[29]	[30]			[33]
25.0 mm						
19.0 mm						
12.5 mm						
9.5 mm						
4.75 mm						
2.36 mm						
1.18 mm						
.600 mm						
.300 mm						
.150.mm						
.075 mm						
PAN				Constant =		[34]

Hot Bin Weights (Batch Plant)	#1	#2	#3	#4	#5
Cold Feed(materials) Percentages	[35]				
	[36]				
	[37]				

Gmm (Rice) Test Data

A. Weight of Container	[38]
B. Weight of Container + Mix	[39]
C. Weight of Container + Mix In Water	[40]
D. Weight of Container (hanging in water)	[41]
E. Uncorrected Maximum Specific Gravity $\frac{B - A}{(B - A) - (C - D)}$	[42]
Weighing Interval	[43]
0 Min	
15 Min	
30 Min	
45 Min	
60 Min	
75 Min	
F. Weight of Pan + Final Sample Weight	[44]
G. Weight of Pan	[45]
H. Max Specific Grav $\frac{B - A}{(F - G) - (C - D)}$	[46]
I. Dry Back Correction Factor	[47]
J. (G) - (H) = Corrected Value	[48]
K. Reheat Correction Factor	[49]
L. (G) x (J)Corrected Max Specific Gravity	[50]

Gyratory Compacted Specimen Test Data

Specimen No.	A) Height @ Nini	B) Height @ Ndes	C) Dry In Air	D) SSD In Air	E) Weight In Water	F) Gmb @ Ndes' Measured	G). Gmb @ Ndes' Estimated	SAMPLE VOLUME H) '@' Nini	SAMPLE VOLUME I) '@ Ndes	J) Correction Factor	K) Gmb @Nini Estimated	L) Gmb @Nini Corrected	M) Gmm Rice Grav	N) VTM @' Ndes
	Measured	Measured	Measured	Measured	Measured	C / (D-E)	C / I	Ax17.6715	Bx17.6715	F / G	C / H	J x K	Measured	(M-F) / M x 100
1	[55]	[56]	[57]	[58]	[59]	[60]	[61]	[62]	[63]	[64]	[65]	[66]	[67]	[68]
2														
3														
AVERAGES						[69]						[70]		[71]

*NOTE: BY PROVIDING THIS DATA UNDER MY SIGNATURE AND/OR HICAMS CERTIFICATION NUMBER, I ATTEST TO THE ACCURACY AND VALIDITY OF THE TEST DATA CONTAINED ON THIS FORM AND CERTIFY THAT NO DELIBERATE MISREPRESENTATION OF TEST RESULTS, IN ANY MANNER, HAS OCCURRED

[72]

* PRINT NAME LEGIBLY w/ HICAMS #

[73]

QA/QC TECHNICIANS SIGNATURE

QA/QC-1

HOT MIX ASPHALT QA/QC TESTS WORKSHEET
(G_{mm} by Rice Test Method)

GENERAL NOTE: This form may be used by either QA or QC personnel when determining binder content, recovered aggregate gradations, maximum specific gravity by Rice Test Method, and Gyratory test data for mix samples compacted to N_{des} gyrations. QC is required to attach the following to this QA/QC Form:

1) a copy of the weigh ticket for the mix sample load; and
2) the ignition furnace printout for the binder content test.

This form, with these attachments, shall be maintained in the appropriate QC files for a period of (3) years after completion of the form. QA shall maintain their QA/QC-1 forms indefinitely unless permission is given otherwise.

1. Type mix being produced and tested; i.e, SF9.5A, I19.0C, etc.
2. Actual location of plant site (Site shown on JMF)
3. Current asphalt plant HiCAMS certification number.
4. Date mix is tested by QA/QC personnel
5. Consecutive QC sample number, i.e., 09-1, 09-2, 09-3, etc.
6. Actual Job Mix Formula Number of mix tested.
7. Percent Absorption (P_{ba}) value from the Job Mix Formula.
8. Effective Specific Gravity (G_{se}) value from the Job Mix Formula
9. Bulk Specific Gravity (G_{sb}) value from the Job Mix Formula.
10. Binder specific gravity from actual mix design being used.
11. Calculated effective specific gravity from the Rice Test from this mix sample.
    (See Section 7.16.3 of this manual for formula).
12. Corrected bulk specific gravity. See Section 7.16 Step 1 for formula.
13. Weight of recovered aggregate after ignition furnace burn.
14. Weight of dry recovered aggregate after washing aggregate sample.
15. Weight of material in pan after sieving (See PAN weight under Block 28).
16. Percent loss after sieving. See Section 7.9 for formula
17. YES if No. 16 above is 0.2% or less. NO if it exceeds 0.2%.
18. Weight of ignition furnace basket + mix.
19. Weight of ignition furnace basket.
20. No. 18 minus No. 19 = Total weight of mix.
21. Combined weight of mix sample and ignition furnace basket shown on ignition furnace readout.
22. YES if weight difference between Nos. 18 and 21 is within 5.0 grams. No if the difference is not w/in 5.0 grams.
23. Percent binder from Job Mix Formula being produced.
24. Percent binder from ignition furnace burn ticket.

NOTE: Nos. 25, 26, and 27, to be used when checking moisture in the completed mix when required.

25. Mix sample weight before drying.
26. Mix sample weight after drying. (Mix should be dried at 325ºF ±25ºF to a constant weight in oven.)
27. % Moisture in Mix:
    (Original mix sample weight (25) – Dry mix sample weight (26)) ÷ Original mix sample weight (25) x 100)
28. Accumulated weight of aggregate retained on each sieve/pan.
29. Percent retained. Cumulative Wt. Retained ÷ (Pan Wt. + Wt. Loss from Washing) x 100.
    See Section 7.9 for formula and example calculation of constant.
30. Total Percent passing [100 – % Retained (#29)].
31. [ITEM DELETED]
32. [ITEM DELETED]
33. Target values for each sieve from JMF.
34. Constant for computing percent retained (See Section 7.9 for formula and example calculation of constant).
35. Actual aggregate weights pulled from each hot bin being used (Batch Plant Only).
36. Type aggregate in each cold feed bin being used in mix; i.e., 78M, screenings, sand, etc.

QA/QC-1

HOT MIX ASPHALT QA/QC TESTS WORKSHEET
(G_{mm} by Rice Test Method)
(continued)

37. Actual percent aggregate from each cold feed bin being used for in mix.
38. Weight of container (Rice Pot).
39. Weight of container + mix.
40. Weight of container + mix w/ both suspended under water.
41. Weight of empty container suspended under water.
42. Uncorrected Maximum Specific Gravity (Rice Gravity). Use formula on form.
43. Weighing interval, only if dry back test is required.
    (Dry back required if any aggregate in mix has absorption of 1.5% or greater.)
44. Final weight of pan and mix sample.
45. Weight of Pan.
46. Maximum Specific Gravity calculation (Nos. 43 thru 46 completed only if dry back is performed).
47. Dry back correction factor, if applicable. Difference in blank (42) and blank (46).
48. Corrected G_{mm} value, only if dryback correction factor is used. [Blank (42) minus blank (47)]
49. Reheat correction factor, if applicable.
50. Corrected Maximum specific gravity (if reheat correction factor used). Blank (46) minus (48).
51. Calculated VMA from test data (See calculation formula in Section 7.16.4)
52. Calculated VFA from test data (See calculation formula in Section 7.16.5)
53. Calculated % G_{mm}@ N_{ini} from test data (See calculation formula in Section 7.16.7)
54. Calculated $P_{0.075}/P_{be}$ Ratio from test data (See calculation formula in Section 7.16.6)
55. Height (mm) of Gyratory specimens at N_{ini} taken from computer printout.
56. Height (mm) of Gyratory specimens at N_{des} taken from computer printout.
57. Unsuspended dry weight of each Gyratory specimen to nearest 0.1 gram (x.x).
58. Unsuspended saturated surface dry weight of each Gyratory specimen to nearest 0.1 gram (x.x).
59. Suspended weight in 77°F water for 3-5 minutes for each Gyratory specimen to nearest 0.1 gram (x.x).
60. Bulk specific gravity of each specimen (G_{mb}@N_{des}, measured to nearest 0.001 (x.xxx).
61. Bulk Specific Gravity of each specimen (G_{mb} @N_{des}, estimated)
62. Sample volume @ N_{ini} expressed in cm^3.
63. Sample volume @ N_{des} expressed in cm^3.
64. Correction factor determined by dividing G_{mb}@N_{des} (measured) by G_{mb} @N_{des} (estimated). (Calculated to 0.001)
65. Bulk Specific Gravity (G_{mb} @N_{ini} Estimated).
66. Bulk Specific Gravity (G_{mb} @N_{ini} Corrected) Correction Factor x G_{mb} @N_{ini} (estimated).
67. G_{mm} (Rice Test specific gravity) from blank 42, or blank 46 if dry back is required.
68. Percent voids in total mix (VTM) from test data (see calculation formula in Section 7.16).
69. Average G_{mb} @ N_{des}. [Total of specimen G_{mb} ÷ 3 (nearest 0.001)]
70. Average G_{mb} @ N_{ini} [Total of G_{mb} @ N_{ini} ÷3 (nearest 0.001)]
71. Average VTM @ N_{des} [Total of VTMs ÷3 (nearest 0.1%)]
72. Printed name and HiCAMS certification number of QA/QC technician performing test
73. Signature of QA/ QC technician performing test

NOTE : All volumetric properties (VMA, VTM, VFA) are calculated using G_{mb} @ N_{des}(measured).

This Page Intentionally Left Blank

QA/QC-1A Rev

NORTH CAROLINA DEPARTMENT OF TRANSPORTATION
HOT MIX ASPHALT QUALITY CONTROL TEST WORKSHEET

6/18/2008

Type Mix:	[1]	QC Sample Date:	[4]	JMF Pba:	[7]	MD Gb:	[10]
Plant Location:	[2]	QC Sample No.:	[5]	JMF Gse:	[8]	Calculated Gse:	[11]
Plant Cert No:	[3]	JMF No.:	[6]	JMF Gsb:	[9]	Corrected Gsb:	[12]

Dry & Pan Weights		Pan Wt. <0.2% of Dry Wt. After Sieving?
Agg Wt after Ignition	[13]	
Dry Wt after Wash	[14]	
Pan Weight	[15]	
% Loss from Sieving	[16]	[17]

Furnace Weights		Furnace Scale Within 5.0 grams?
Basket + Mix	[18]	
Basket Wt.	[19]	
Total Mix Wt.	[20]	
Furnace Readout	[21]	[22]

% Binder (Pb)	
JMF % Binder	[23]
% Binder from Burn	[24]

Moisture Content	
Mix Sample Weight	[25]
Mix Dry Weight	[26]
Mix % Moisture	[27]

VMA	[46]
VFA	[47]
%Gmm@Nini	[48]
P0.075 / Pbe Ratio	[49]

Gradation Data (all weights are after burn weights)

SIEVE	Accumulated Weight	Percent Retained	TOTAL % PASSING			JMF
37.5 mm	[28]	[29]	[30]			[33]
25.0 mm						
19.0 mm						
12.5 mm						
9.5 mm						
4.75 mm						
2.36 mm						
1.18 mm						
.600 mm						
.300 mm						
.150.mm						
.075 mm						
PAN				Constant =		[34]

Hot Bin Weights (Batch Plant)	#1	#2	#3	#4	#5
	[35]				
Cold Feed(materials)	[36]				
Percentages	[37]				

*(Vc=.903g/cm3) Rc(value on sheets)g/cm3=

Gmm (CoreLok) Test Data

A. Weight of Empty Bag	[38]
B. Weight of Rubber Sheets	[39]
C. Weight of Sample in air	[40]
D. Weight of Bag + Sample in Water	[41]
E. Total Volume (A+B+C)-D	[42]
F. Bag & Sheet Volume (A/Vc)+(B/Rc)*	[43]
G. Sample Volume (E-F)	[44]
H. Gmm (C/G)	[45]

Gyratory Compacted Specimen Test Data

Specimen Number	A) Height @ Nini	B) Height @ Ndes	C) Dry In Air	D) SSD In Air	E) Weight In Water	F) Gmb @ Ndes' Measured	G) Gmb @ Ndes' Estimated	SAMPLE VOLUME H) '@' Nini	SAMPLE VOLUME I) '@ Ndes	J) Correction Factor	K) Gmb @Nini Estimated	L) Gmb @Nini Corrected	M) Gmm Corelok Gravity	N) VTM @' Ndes
	Measured	Measured	Measured	Measured	Measured	C / (D-E)	C / I	Ax17.6715	Bx17.6715	F / G	C / H	J x K	Measured	(M -F) / M x 100
1	[50]	[51]	[52]	[53]	[54]	[55]	[56]	[57]	[58]	[59]	[60]	[61]	[62]	[63]
2														
3														
AVERAGES						[64]						[65]		[66]

*NOTE: BY PROVIDING THIS DATA UNDER MY SIGNATURE AND/OR HICAMS CERTIFICATION NUMBER, I ATTEST TO THE ACCURACY AND VALIDITY OF THE TEST DATA CONTAINED ON THIS FORM AND CERTIFY THAT NO DELIBERATE MISREPRESENTATION OF TEST RESULTS, IN ANY MANNER, HAS OCCURRED

[67]

* PRINT NAME LEGIBLY w/HICAMS #

[68]

QA/QC TECHNICIANS SIGNATURE

QA/QC-1A

HOT MIX ASPHALT QA/QC TESTS WORKSHEET
(G_{mm} by CoreLok Test Method)

GENERAL NOTE: This form may be used by either QA or QC personnel when determining binder content, recovered aggregate gradations, maximum specific gravity by CoreLok Test Method, and Gyratory test data for mix samples compacted to N_{des} gyrations. QC is required to attach the following to this QA/QC Form:

1) a copy of the weigh ticket for the mix sample load; and
2) the ignition furnace printout for the binder content test.

This form, with these attachments, shall be maintained in the appropriate QC files for period of three (3) years after completion of the form. QA shall maintain their QA/QC-1 forms indefinitely unless permission is given otherwise.

1. Type mix being produced and tested; i.e, SF9.5A, I19.0C, etc.
2. Actual location of plant site (Site shown on JMF).
3. Current asphalt plant HiCAMS certification number.
4. Date mix is tested by QA/QC personnel.
5. Consecutive QC sample number, i.e., 09-1, 09-2, 09-3, etc.
6. Actual Job Mix Formula Number of mix tested.
8. Percent Absorption (P_{ba}) value from the Job Mix Formula.
8. Effective Specific Gravity (G_{se}) value from the Job Mix Formula.
9. Bulk Specific Gravity (G_{sb}) value from the Job Mix Formula.
10. Binder specific gravity from actual mix design being used.
11. Calculated effective specific gravity from the Rice Test from this mix sample. See Section 7.16 for formula.
12. Corrected bulk specific gravity. See Section 7.16 Step 1 for formula.
13. Weight of recovered aggregate after ignition furnace burn.
14. Weight of dry recovered aggregate after washing aggregate sample.
15. Weight of material in pan after sieving (See PAN weight under Block 28).
16. Percent loss after sieving. See Section 7.9 for formula.
17. YES if No. 16 above is 0.2% or less. NO if it exceeds 0.2%.
18. Weight of ignition furnace basket + mix.
19 Weight of ignition furnace basket.
20. No. 18 minus No. 19 = Total weight of mix.
21. Combined weight of mix sample and ignition furnace basket shown on ignition furnace readout.
22. YES if weight difference between Nos. 18 and 21 is within 5.0 grams. No if the difference is not w/in 5.0 grams.
23. Percent binder from Job Mix Formula being produced.
24. Percent binder from ignition furnace burn ticket.

Note: Nos. 25, 26, and 27, to be used when checking moisture in the completed mix when required.

25. Mix sample weight before drying.
26. Mix sample weight after drying. (Mix should be dried at 325ºF ±25ºF to a constant weight in oven.)
27. % Moisture in Mix.
    (Original mix sample weight (25) – Dry mix sample weight (26)) ÷ Original mix sample weight (25) x 100)
28. Accumulated weight of aggregate retained on each sieve/pan.
29. Percent retained. Cumulative Wt. Retained ÷ (Pan Wt. + Wt. Loss from Washing) x 100.
    See Section 7.9 for formula and example calculation of constant.
30. Total Percent passing [100 – % Retained (#29)].
31. [ITEM DELETED]
32. [ITEM DELETED]
33. Target values for each sieve from JMF.
34. Constant for computing percent retained (See Section 7.9 for formula and example calculation of constant).
35. Actual aggregate weights pulled from each hot bin being used (Batch Plant Only).
36. Type aggregate in each cold feed bin being used in mix; i.e., 78M, screenings, sand, etc.
37. Actual percent aggregate from each cold feed bin being used in mix (nearest whole percentage).
38. Weight of empty test sample bag.

QA/QC-1A

HOT MIX ASPHALT QA/QC TESTS WORKSHEET
(G_{mm} by CoreLok Test Method)
(continued)

39. Weight of rubber sheets.
40. Weight of mix sample in air.
41. Weight of bag plus mix sample in water.
42. Total volume (A+B+C) – (D).
43. Sample bag and rubber sheet volume (A/Vc) + (B/Rc).
44. Mix Sample Volume (E – F).
45. Maximum Specific Gravity [Specific Gravity of Sample to nearest 0.001 (C / G)].
46. Calculated VMA from test data (See calculation formula in Section 7.16).
47. Calculated VFA from test data (See calculation formula in Section 7.16).
48. Calculated % G_{mm}@ N_{ini} from test data (See calculation formula in Section 7.16).
49. Calculated $P_{0.075}/P_{be}$ Ratio from test data (See calculation formula in Section 7.16).
50. Height (mm) of Gyratory specimens at N_{ini} taken from computer printout.
51. Height (mm) of Gyratory specimens at N_{des} taken from computer printout.
52. Unsuspended dry weight of each Gyratory specimen to nearest 0.1 gram (x.x).
53. Unsuspended saturated surface dry weight of each Gyratory specimen to nearest 0.1 gram (x.x).
54. Suspended weight in 77 degree (F) water for 3-5 minutes for each Gyratory specimen to nearest 0.1 gram (x.x).
55. Bulk specific gravity of each specimen (G_{mb} @N_{des}, measured to nearest 0.001 (x.xxx).
56. Bulk Specific Gravity of each specimen (G_{mb} @N_{des}, estimated).
57. Sample volume @ N_{ini} expressed in cm^3.
58. Sample volume @ N_{des} expressed in cm^3.
59. Correction factor determined by dividing G_{mb}@N_{des} (measured) by G_{mb} @N_{des} (estimated). (Calculated to 0.001)
60. Bulk Specific Gravity (G_{mb} @N_{ini} Estimated).
61. Bulk Specific Gravity (G_{mb} @N_{ini} Corrected) Correction Factor x Gmb @Nini(estimated).
62. G_{mm} (Rice Test specific gravity) from blank 42, or blank 46 if dry back is required.
63. Percent voids in total mix (VTM) from test data (See calculation formula in Section 7.16.2)
64. Average G_{mb} @ N_{des} [Total of specimen G_{mb} ÷ 3 (nearest 0.001)].
65. Average G_{mb} @ N_{ini} [Total of G_{mb} @ N_{ini} ÷3 (nearest 0.001)].
66. Average VTM @ N_{des} [Total of VTMs ÷3 (nearest 0.1%)] .
67. Printed name and HiCAMS certification number of QA/QC technician performing test.
68. Signature of QA/ QC technician performing test.

This Page Intentionally Left Blank

QA/QC-3 7/15/2008

NORTH CAROLINA DEPARTMENT of TRANSPORTATION

DETERMINATION of ASPHALT DRAINDOWN CHARACTERISTICS

DATE: [1] SAMPLE NUMBER: [2]

PROJECT NO. [3] COUNTY: [4]

JMF NUMBER: [5] MIX TYPE: [6]

BINDER CONTENT: [7] FIBER PERCENT: [8]

FIBER TYPE: [9] FIBER SOURCE: [10]

CURING TIME:	TEMPERATURE:
TIME IN: [11 A]	MIXING: [12]
TIME OUT: [11 B]	CURING: [13]

WEIGHT OF EMPTY PAN: [A] [14] gms.

WEIGHT OF EMPTY BASKET: [B] [15] gms.

WEIGHT OF BASKET & MIX: [C] [16] gms.

WEIGHT OF SAMPLE: [D] = (C - B) [17] gms.

WGT. OF PAN & DRAINDOWN: [E] [18] gms.

WEIGHT OF DRAINDOWN: [F] = (E - A) [19] gms.

PERCENT DRAINDOWN: (F / D) x 100 [20] %

COMMENTS: [21]

TEST PERFORMED BY: [22]

SIGNATURE AND QMS CERTIFICATION NO.: [23]

* NOTE: BY PROVIDING THIS DATA UNDER MY SIGNATURE AND/OR HiCAMS CERTIFICATION NUMBER, I ATTEST TO THE ACCURACY AND VALIDITY OF THE TEST DATA CONTAINED ON THIS FORM AND CERTIFY THAT NO DELIBRIATE MISREPSENTATION OF TEST RESULTS IN ANY MANNER HAS OCCURRED.

QA/QC-3

DETERMINATION of ASPHALT DRAINDOWN

GENERAL NOTE: This form to be used by both QA and QC Technicians when determining the percent draindown in certain asphalt mixtures. This form with any attachments shall be maintained in the appropriate QC Lab for a period of three (3) years after completion of the form. QA shall maintain this form indefintely unless permission is given otherwise.

1. Date mix was produced and draindown test performed.
2. Sample number of mix being tested.
3. Project number on which the mix was placed.
4. County in which project is located.
5. Job Mix Formula for mix type.
6. Type of mix being produced.
7. Percent binder shown on the current job mix formula.
8. Percent fiber in the mix (from JMF).
9. Type of fiber being used.
10. Source of fiber being used.
11. CURING TIME:
    A. Time mix started curing.
    B. Time mix came out of curing.
12. Mixing temperature of mix (from JMF).
13. Temperature of mix during curing.
14. Empty pan weight.
15. Empty basket weight.
16. Basket and mix weight.
17. Sample weight.
18. Pan and draindown weight.
19. Draindown weight.
20. Percent drain down to nearest (0.00 %).
21. Comments or observations made by Technician during testing.
22. Printed name of QA or QC Technician performing test.
23. Signature and certification of Technician performing test.

QA/QC-4 **NORTH CAROLINA DEPARTMENT OF TRANSPORTATION** 12-19-02

RICE DRY BACK CORRECTION FACTOR WORKSHEET

TYPE MIX:_____[1]_____ JMF NO._____[2]_____

CONTRACTOR:_____[3]_____ PLANT LOCATION:_____[4]_____ X = FROM TOP PORTION OF RICE WORKSHEET

Y = FROM BOTTOM PORTION OF RICE WORKSHEET

SAMPLE NUMBER	MAXIMUM SPECIFIC GRAVITY (X)	MAXIMUM SPECIFIC GRAVITY (DRY BACK) (Y)	DIFFERENCE Z = (X - Y)	CORRECTION FACTOR AVG. DIFFERENCE MOVING AVG. OF 4	* QA/QC TECHNICIAN'S SIGNATURE w/HiCAMS #
[5]	[6]	[7]	1. [8]	[9]	[10]
			2.		
			3.	(AVG. 1-4)	
			4.		
				(AVG. 2,3,4,12)	
			12.		
				(AVG. 3,4,12,20)	
			20.		
				(AVG. 4,12,20,28)	
			28.		

NOTE 1: IF A DIFFERENCE VALUE DOES NOT SEEM TO BE REPRESENTATIVE, PERFORM ANOTHER RICE TEST WITH THE DRY BACK PROCEDURE, AND IF THAT VALUE IS REPRESENTATIVE, USE IT INSTEAD.

NOTE 2: DRY BACKS WILL BE RUN ON THE FIRST FOUR RICE TESTS FOR EACH JOB MIX FORMULA. THE AVERAGE DIFFERENCE OF THESE FOUR RICE TESTS WILL ESTABLISH A CORRECTION FACTOR FROM THE MAX. SP. GR. (THE FIGURE CALCULATED ON TOP PORTION OF THE RICE WORKSHEET) AND ENTER THE RESULT AT THE BOTTOM OF THE RICE WORKSHEET AS MAX. SP. GR. (DRY BACK). ACTUAL DRY BACKS WILL BE RUN ON EVERY EIGHTH RICE TEST THEREAFTER AND A NEW MOVING AVERAGE CORRECTION FACTOR WILL BE COMPUTED.

* BY PROVIDING THIS DATA UNDER MY SIGNATURE AND/OR HiCAMS CERTIFICATION NUMBER, I ATTEST TO THE ACCURACY AND VALIDITY OF THE DATA CONTAINED ON THIS FORM AND CERTIFY THAT NO DELIBERATE MISREPRESENTATION OF TEST RESULTS, IN ANY MANNER, HAS OCCURRED.

QA/QC-4

RICE TEST DRYBACK CORRECTION FACTOR WORKSHEET

GENERAL NOTE: This worksheet may be used by either QC or QA personnel to establish Rice dry back correction factors. While the use of a dry back correction factor is an option and is acceptable, it is not required. Dry backs may be performed on any or all Rice Test if desired. QA/QC-4 forms shall be maintained in the QC lab files for a minimum of one three (3) years after completion of the form. QA shall maintain its forms indefinitely unless permission is given otherwise.

1. Type mix being produced.
2. Appropriate job mix formula number.
3. Contractor producing mix.
4. Actual location of plant site.
5. QC sample number.
6. Uncorrected maximum specific gravity from top portion of Rice worksheet, (QA/QC-2).
7. Corrected maximum gravity from bottom portion of Rice worksheet (QA/QC-2).
8. Difference Z = (X) - (Y) to the nearest 0.001 (x.xxx). (see Note 1 at bottom of this worksheet).
9. Refer to Note 2 at bottom of this worksheet for specific instructions for determining dry back correction factors.
10. QA or QC Technician's signature certifying that all data entered on this form is true and correct.

QA/QC-5 (Revised) *12-19-02*

NORTH CAROLINA DEPARTMENT OF TRANSPORTATION

WORKSHEET FOR ROADWAY CORE SAMPLE DENSITY DETERMINATION & COMPARISON

PROJECT NUMBER: [1] *TYPE MIX:* [2] *MIN. % COMPACTION REQ.:* [3]

CONTRACTOR: [4] *PLANT LOCATION:* [5]

DATE PLACED	JMF No.	SAMPLE No.	SAMPLE THICKNESS	DRY WT.	SSD WT.	IN WATER WT.	QA SP. GR.	QC SP. GR.	TARGET SP. GR.	QA %	QC %	LIMITS OF PRECISION (Y/N)	* QA/QC TECHNICIAN SIGNATURE
[6]	[7]	[8]	[9]	[10]	[11]	[12]	[13]	[14]	[15]	[16]	[17]	[18]	[19]

NOTE: QC TO FAX CURRENT FORM TO QA DAILY DURING PRODUCTION.

** BY PROVIDING THIS DATA UNDER MY SIGNATURE AND/OR HiCAMS CERTIFICATION NUMBER, I ATTEST TO THE ACCURACY AND VALIDITY OF THE DATA CONTAINED ON THIS FORM AND CERTIFY THAT NO DELIBERATE MISREPRESENTATION OF TEST RESULTS, IN ANY MANNER, HAS OCCURRED.*

QA/QC-5

ROADWAY CORE SAMPLE DENSITY DETERMINATION AND COMPARISON WORKSHEET

GENERAL NOTE: This worksheet is to be completed and maintained on a daily basis by QA/QC personnel when checking percent compaction of density core samples. This worksheet is to be kept on file in the appropriate QC Lab files for minimum of three (3) years after completion. The QA Lab shall maintain its QA/QC-5 forms indefinitely unless permission is given otherwise. Required data is to be transferred to Form QC-5 or QA-5, whichever is applicable. The QC worksheet is to be sent to the appropriate QA Lab daily. When QA personnel are checking percent compaction on comparison cores, verification cores, or retest of QC cores, a copy will be sent to the appropriate QC Lab upon completion.

Note: Report only one type mix per QA/QC-5 Form.

1. Prime project number from which core samples were taken.
2. Type mix being tested for compaction.
3. Minimum % compaction required by the Specifications.
4. Name of Contractor placing mix.
5. Actual location of plant site producing mix.
6. Actual date that mix was placed and compacted.
7. Appropriate JMF number for mix type being placed.
8. Core sample number: Assigned by QC roadway technician if a QC core sample.
   Assigned by QA roadway technician if either a comparison or verification sample.
   (See Section 10 for numbering procedures.)
9. Actual thickness of core sample. (measured to the nearest 1/16")
10. Dry specimen weight to the nearest 0.1 gram.
11. Specimen saturated surface dry weight to the nearest 0.1 gram.
12. Specimen weight suspended in 77 degree water for 3-5 minutes to the nearest 0.1 gram.
13. Actual specific gravity of core sample when tested by QA personnel.
14. Actual specific of core sample when tested by QC personnel.
15. Use the appropriate average density control specific gravity at the end of each day's production until a moving average of four specific gravities is attained. Once a moving average density control specific gravity is attained, the last moving average at end of the day will be used thereafter.
16. Actual QA percent compaction to the nearest 0.1%.
17. Actual QC percent compaction to the nearest 0.1%.
18. Mark "Y" for Yes or "N" for No according to whether or not results are within acceptable limits of precision.
19. Signature of QA or QC Technician performing tests certifying that all data entered on this form is true and correct.

QA/QC-5A

Revised 12/01/2011

NORTH CAROLINA DEPARTMENT OF TRANSPORTATION

WORKSHEET FOR CoreDry CORE SAMPLE DENSITY DETERMINATION

PROJECT NUMBER : [1] **TYPE MIX :** [2] **Date:** [3]

CONTRACTOR : [4] ***PLANT LOCATION:*** [5]

DATE PLACED	JMF NO.	SAMPLE NO.	INITIAL Wt.	0.0005 x (A)	Wt. after 1st Series	Grams Loss (A-C)	Wt. after 2nd Series	Grams Loss (C - E)	Wt. after 3rd Series	Grams Loss (E - G)	Initials
		#	(A)	(B)	(C)	(D)	(E)	(F)	(G)	(H)	
[6]	[7]	[8]	[9]	[10]	[11]	[12]	[13]	[14]	[15]	[16]	[17]

Note: Core must be dried @ least 2 Complete Series. If loss is not less than column (B) must be repeated until dry.

[18]

* PRINT NAME LEGIBLY w/ **HICAMS#**

[19]

* QA/QC TECHNICIAN'S SIGNATURE

* NOTE: BY PROVIDING THIS DATA UNDER MY SIGNATURE AND / OR HiCAMS CERTIFICATION NUMBER, I ATTEST TO THE ACCURACY AND VALIDITY OF THE DATA CONTAINE THAT NO DELIBERATE MISREPRESENTATION OF TEST RESULTS, IN ANY MANNER, HAS OCCURRED.

QA/QC-5A

COREDRY CORE SAMPLE DENSITY DETERMINATION WORKSHEET

GENERAL NOTE: This worksheet is to be completed and maintained on a daily basis by QA/QC personnel when checking percent compaction of density core samples. This worksheet is to be kept on file in the appropriate QC Lab files for minimum of three (3) years after completion. The QA Lab shall maintain its QA/QC-5A forms indefinitely unless permission is given otherwise. Required data is to be transferred to Form QC-5 or QA-5, whichever is applicable. The QC worksheet is to be faxed to the appropriate QA Lab daily. When QA personnel are checking percent compaction on comparison cores, verification cores, or retest of QC cores.

Note: Report only one type mix per QA/QC-5A Form.

1. Prime project number from which core samples were taken.
2. Type mix being tested.
3. Actual date cores are tested.
4. Name of Contractor placing mix.
5. Actual location of plant site producing mix.
6. Actual date that mix was placed and compacted.
7. Appropriate JMF number for mix being placed.
8. Core sample number: Assigned by QC Roadway Technician if a QC core sample.
   Assigned by QA Roadway Technician if either a comparison or verification sample.
   (see Section 10 for numbering procedures)
9. Initial specimen weight to the nearest 0.1 gram (A).
10. Initial specimen weight times 0.0005 =maximum grams difference to achieve constant weight (B).
11. Record weight after 1st core dry series (C).
12. Subtract weight after 1st core dry series from initial specimen weight (A-C).
13. Record weight after 2nd core dry series (E).
14. Subtract weight after 2nd core dry series from weight after 1st core dry series (C-E).
15. Run 3rd core dry series if loss is not equal to or less than column B must be repeated until constant weight is achieved.
16. Subtract 3 core dry series weight from 2nd core series weight. If loss is not equal to or less than column B.
17. Initials or QA or QC Technician performing the test.
18. Printed name of QA/QC Technician performing test certifying that all data entered on this form is true and correct. Also enter HiCAMS number.
19. Technician signature.

QA/QC-5B

Revised 12/01/2011

NORTH CAROLINA DEPARTMENT OF TRANSPORTATION

WORKSHEET FOR Oven Dry CORE SAMPLE DENSITY DETERMINATION

PROJECT NUMBER : [1] **TYPE MIX :** [2] **Date:** [3]

CONTRACTOR : [4] ***PLANT LOCATION:*** [5]

DATE PLACED	JMF NO.	SAMPLE NO. #	Dried Over Night ? Yes / No	Initial Wt. (A)	0.0005 x (A) (B)	2 Hour Intervals Wt. (C)	Grams Loss (A - C) (D)	2 Hour Intervals Wt. (E)	Grams Loss (C-E)	2 Hour Intervals Wt. (G)	Grams Loss (E - G) (H)	Initials
[6]	[7]	[8]	[9]	[10]	[11]	[12]	[13]	[14]	[15]	[16]	[17]	[18]

Note: Samples saturated with water shall initially be dried in an oven over night. (min. 4 hrs.) @ 125 +/- 5°F (52 +/- 3°C)
Then weighed at 2 hr. drying intervals.

[19] [20]

* PRINT NAME LEGIBLY w/ **HICAMS#** * QA/QC TECHNICIAN'S SIGNATURE

* NOTE: BY PROVIDING THIS DATA UNDER MY SIGNATURE AND / OR HiCAMS CERTIFICATION NUMBER, I ATTEST TO THE ACCURACY AND VALIDITY OF THE DATA CO
THAT NO DELIBERATE MISREPRESENTATION OF TEST RESULTS, IN ANY MANNER, HAS OCCURRED.

QA/QC-5B

OVEN DRY CORE SAMPLE DENSITY DETERMINATION WORKSHEET

GENERAL NOTE: This worksheet is to be completed and maintained on a daily basis by QA/QC personnel when checking percent compaction of density core samples. This worksheet is to be kept on file in the appropriate QC Lab files for minimum of three (3) years after completion. The QA Lab shall maintain its QA/QC-5B forms indefinitely unless permission is given otherwise. Required data is to be transferred to Form QC-5 or QA-5, whichever is applicable. The QC worksheet is to be faxed to the appropriate QA Lab daily. When QA personnel are checking percent compaction on comparison cores, verification cores, or retest of QC cores.

Note: Report only one type mix per QA/QC-5B Form.

1. Prime project number from which core samples were taken.
2. Type mix being tested.
3. Actual date cores are tested.
4. Name of Contractor placing mix.
5. Actual location of plant site producing mix.
6. Actual date that mix was placed and compacted.
7. Appropriate JMF number for mix being placed.
8. Core sample number: Assigned by QC Roadway Technician if a QC core sample.
   Assigned by QA Roadway Technician if either a comparison or verification sample.
   (See Section 10 for numbering procedures)
9. Specimen dried overnight (Yes/No).
10. Initial Specimen weight to the nearest 0.1 gram (A).
11. Initial Specimen weight times 0.0005 equals maximum grams difference to achieve constant weight (B).
12. Record weight after 1st 2-hr. interval (C).
13. Subtract 1st 2-hr. interval weight form initial specimen weight (A-C).
14. Continue the 2 hr. drying process as needed to achieve constant weight.
15. [See number 13].
16. [See number 12].
17. [See number 13].
18. Initials or QA or QC Technician performing test.
19. Printed name of QA/QC Technician performing test certifying that all data entered on this form is true and correct. Also enter HiCAMS number.
20. Technician signature.

QAQC-6
01-01-08

NCDOT
HOT MIX ASPHALT QUALITY CONTROL CHART

YEAR [1]

TYPE MIX: [2] CONTRACTOR: [3]

JMF NO. [4] PLANT LOCATION: [5] MIX PARAMETER: [6]

CONTROL LIMITS [7]

QC TEST DATA (BLACK)
QC MOVING AVERAGE (RED)
QA TEST DATA (BLUE)
SOLID
SOLID
SOLID

MOVING AVG. LIMITS (GREEN) DASHED
INDIVIDUAL LIMITS (RED) DASHED

[8]

SAMPLE NUMBER

NOTE: THIS FORM TO BE MAINTAINED FOR EACH MIX DESIGN AT QC LAB SITE AND UPDATED ON A DAILY BASIS.

* BY PROVIDING THIS DATA UNDER MY SIGNATURE AND /OR HiCAMS CERTIFICATION NUMBER, I ATTEST TO THE ACCURACY AND VALIDITY OF THE DATA CONTAINED ON THIS FORM AND CERTIFY THAT NO DELIBERATE MISREPRESENTATION OF TEST RESULTS, IN ANY MANNER, HAS OCCURRED.

* PRINT QA /QC TECHNICIAN'S NAME w/HiCAMS#: [9]

* QA /QC TECHNICIAN'S SIGNATURE: [10]

QA/QC-6

HOT MIX ASPHALT QUALITY CONTROL CHART

GENERAL NOTE: Control charts shall be maintained by QC personnel at the QC Lab Site during production. Control charts shall be plotted and maintained for each mix design produced at each plant site on a daily basis. Different JMF numbers based on the same mix design may be plotted on one graph, provided the JMF change location is noted. The following mix parameters shall be plotted on these control charts: Aggregate washed gradation (for each mix type, one sieve size smaller than the mix nominal maximum size, and for all mixes, the 2.36mm and 0.075mm sieves); % binder content, P_b (control method only); Gyratory bulk specific gravity, (G_{mb}); maximum specific gravity, (G_{mm}); % air voids, (VTM); voids in mineral aggregate, (VMA); $P_{0.075}/P_{be}$ Ratio; and $\%G_{mm}$ @N_{ini}.

Both the individual test value and the moving average of the last four (4) data points will be plotted on each chart. The QC's individual test data will be shown in black and the QC moving average in red. The QA's comparison split sample test data will be plotted in blue at the same location on the chart as the comparable QC results. The QA verification test data shall be plotted in purple and should be plotted at a location on the chart as close as possible to where other relative QC test data is located. The moving average limits shall be drawn with a dash green line and the individual test limits with a dash red line. These control charts may be computer generated by use of the current NCDOT spreadsheet. Forms to be maintained in the QC lab files for a period of three (3) years after completion.

1. Calendar year for data plotted.
2. Mix Type represented on chart.
3. Contractor producing mix.
4. Applicable job mix formula number.
5. Site of plant producing mix (Shown on JMF).
6. Mix parameter being tested, such as % binder, Gyratory bulk specific gravity (G_{mb}), etc.
7. Appropriate mix parameter target value will be placed adjacent to dark center line.
   Moving Average and Individual Limits will be plotted as described in second paragraph above. The control limit increments scale may be established by personnel plotting data, but should be such that information is legible.
8. Enter appropriate sequential QC sample numbers at each line increment.
9. QA or QC Technician's printed name and HiCAMS certification number. This should be the technician verifying that the data plotted is true and correct, which may or may not be the technician that actually plotted the data.
10. QA or QC Technician's signature certifying that all data entered on this form is true and correct.

10/27/2003 QA/QC-7

NORTH CAROLINA DEPARTMENT OF TRANSPORTATION

DIVISION OF HIGHWAYS

N.C. Hearne Straightedge Summary

Project No.: [1] Route: [2] Division: [3]

Type Mix: [4] Lane: [5] Profile Location: [6]

Paving Contractor [7] S.E. Operator [8]

Date	T.S. #	Beg. Station No.	End. Station No.	S.E.I.	0.4" Dev.	Retest SEI	Comments
[9]	1	[10]	[11]	[12]	[13]	[14]	[15]
	2						
	3						
	4						
	5						
	6						
	7						
	8						
	9						
	10						
	11						
	12						
	13						
	14						
	15						
	16						
	17						
	18						
	19						
	20						
	21						
	22						
	23						
	24						
	25						

C.S.I. [16] C.S.I. [17]

Note 1:
Resident Engineer to furnish gold copy to M&T Unit upon completion of Federal Aid Projects only.

*Note 2:
Contractor Must be notified by letter of any Pay Adjustments or Corrective Actions.

*Print Name Legibly: [18]

*Evaluators Signature: [19]

*BY PROVIDING THIS DATA UNDER MY SIGNATURE AND/OR HiCAMS NUMBER, I ATTEST TO THE ACCURACY AND VALIDITY OF OF THE DATA CONTAINED ON THIS FORM AND CERTIFY THAT NO DELIBERATE MISREPRESENTATION OF TEST RESULTS, IN ANY MANNER, HAS OCCRRED.

CC:
White: Resident Engineer
Yellow: Asphalt Design Engineer
Pink: Division Engineer
Gold: Resident Engineer (See Note 1)

Resident/District Engineers Certification
Check One Block

[20]

- $300 Incentive ☐
- $100 Incentive ☐
- Acceptable ☐
- *$300 Disincentive ☐
- *$600 Disincentive ☐
- *Unacceptable/Correction Required ☐

Resident/District Engineer: [21]

Remarks:

QA/QC-7

NC HEARNE STRAIGHTEDGE SUMMARY

GENERAL NOTE: The QA/QC-7 Form is to be used to evaluate the daily graphs and summarize all final surface testing data and other pertinent information from a project which has the "Final Surface Testing" special provision in the contract. The form shall be completed by the Contractor for QC evaluation and by the Department for QA evaluation. The graphs shall be evaluated and this form completed by the Contractor and furnished to the Engineer within 24 hours after profiles are completed each day. The Engineer will then perform the final acceptance evaluation and furnish these results back to the Contractor within 48 hours of receiving the graphs. The Engineer will retain all graphs and forms. Two copies shall be retained by the Resident Engineer; one copy for the Project Files and one copy to be furnished to M&T upon completion of Federal Aid Projects. Copies shall also be furnished to the Asphalt Design Engineer and the Division Engineer. Copies are not required to be attached to Roadway Inspector's Daily Report but may be distributed individually.

1. Master Project Number for Contract being tested.
2. Route No. of Project being tested, i.e., US-17, I-440, SR 1550, etc.
3. Division in which the Contract is located.
4. Type HMA being tested, i.e., S4.75A, S 9.5X, S 12.5X, etc.
5. Location of Lane being tested, i.e., NBL RT. Lane, EBL, RT. Lane, etc.
6. Should be the wheel path tested according to the project stationing; i.e. outside wheelpath, inside wheelpath, etc. Testing will normally be in performed on the right wheel path in same direction of paving, which may or may not be the same as above.
7. Name of Contractor paving the project.
8. Name of person who operated the Straightedge (name is shown on the Graph).
9. Date Test Section was tested (May not be same date mix was placed).
10. Station testing Began for each Test Section.
11. Station testing Ends for each Test Section.
12. SEI Number for each Test Section as determined from the graph by the Evaluator.
13. Number of Deviations that exceed 0.4" within each Test Section (Enter "0" if no 0.4" deviations).
14. SEI Number for each Test Section retested due to Corrective Actions. New entries need to be made for any retested Sections with all other Test Sections within the lot maintaining the initial SEI Number.
15. Any comments concerning each Test Section, i.e., Manhole, Water valve, Intersection, locations, etc.
16. Cumulative Straightedge Index (CSI). This is the total of all SEI's for the lot.
17. CSI number if / when lot is retested after "Allowed" or "Required" corrective actions are taken.
18. Printed name of QC person evaluating Hearne straightedge tape.
19. Signature of QC evaluator certifying that data entered on this form is true and correct.
20. Resident/District Engineer's Certification. Check appropriate box.
    (Partial lots with incentive payments shall be prorated).
    (Partial lots with disincentive payments shall not be prorated but applied in full).
21. Resident/District Engineers Signature certifying that data entered on this form is true and correct.
22. Any comments concerning Operation or Evaluation of this Lot. If there are deviations that exceed the 0.4" blanking band, the station number(s) should be shown here.

QA/QC-8

Revised 1-1-2012

North Carolina Department of Transportation
Roadway Technician's Daily Paving Operation Evaluation Form

Date: 1

Type Mix: 3

Contractor: 2

Project No: 4

	CIRCLE		REMARKS / COMMENTS
1. Is tack being applied uniformly? Verify proper rate? Application Temp?	Yes	No	5
2. Is stringline being placed for alignment?	Yes	No	
3. Are haul trucks raising bed before releasing gate?	Yes	No	
4. Are trucks cleaning out in front of paver?	Yes	No	
5. Is paver engaging truck - not trucks bumping paver?	Yes	No	
6. Is paver folding hopper wing only when the hopper is relatively full?	Yes	No	
7. Is hopper remaining 1/3 full?	Yes	No	
8. Is paving at consistent speed to match delivery rate?	Yes	No	
9. Is head of material kept level w/ auger shaft (+/- 1")?	Yes	No	
10. Is segregation observed in delivery and placement of material?	Yes	No	
11. Are automatic controls used properly to provide grade and cross-slope?	Yes	No	
12. Is smoothness and texture of mat acceptable?	Yes	No	
13. Is mat thickness appropriate for type mix (3:1 ratio minimum)?	Yes	No	
14. Is overlap on longitudinal joint adequate and straight?	Yes	No	
15. Rolling pattern: Are rollers going slow, mat temp. being considered?	Yes	No	
16. Paving equipment working properly? Any leaks?	Yes	No	
17. Compaction method? Core, nuclear, or non-nuclear?	Yes	No	
18. Is MTV being used on this Map?	Yes	No	
19. Does this map have Warm Mix? What technology?	Yes	No	

Plans for tomorrow (or next work day) to address any problems encountered today:

6

7

QA Roadway Technician Name and HiCAMS No.

8

Signature

Note: It is suggested that the Contractor's representative initial or acknowledge items were reviewed together.

White - Resident Engineer
Pink - Contractor Personnel
Gold - Materials & Tests Unit

QA/QC-8

DAILY PAVING OPERATION EVALUATION FORM

GENERAL NOTE: This form to be used to evaluate general daily paving operations and assist with communications between Department and Contractor Roadway personnel in addressing any items that may need more attention or correction in the following days' paving operations.

1. Date mix was placed.
2. Contractor placing asphalt mix.
3. Mix Type being placed.
4. Project asphalt mix is being placed.
5. Individual paving operation items evaluated today.
6. Comment section to note any corrections involving above items. Should also be used to note any other changes not listed above to be performed to improve asphalt laydown operations.
7. Name of Departments Certified Roadway Technician and HiCAMS Number (printed).
8. Signature of Departments Certified Roadway Technician.

Revised March 2009

M&T 612

NCDOT
TENSILE STRENGTH RATIO (TSR) TEST WORKSHEET
Gyratory Compactive Method

Mix Design #:

Date Mix Produced:	[1]	Mix Type:	[5]	JMF No.:	[9]
Contractor:	[2]	Plant Location:	[6]	Plant Cert. No.:	[10]
Additive Supplier:	[3]	Additive Grade:	[7]	Additive Dosage:	[11]
Date Compacted:	[4]	No. Gyrations: [8]	To height:	Date Test Completed:	[12]

SPECIMEN NUMBER			1	2	3	4	5	6	7	8
DIAMETER(in)		(a)								
THICKNESS(in.)		(b)								
DRY MASS IN AIR		(c)								
SSD MASS IN AIR		(d)								
MASS IN WATER		(e)								
VOLUME	*(d - e)*	(f)								
BULK SP. GR.	*(c ÷ f)*	(g)								
MAX. SP.GR.	*(From Actual Rice Test)*	(h)								
% AIR VOIDS	*(100 X (h - g) ÷ h)*	(i)								
VOLUME AIR VOIDS	*(i X f) ÷ 100*	(j)								
PEAK LOAD (psi)		(k)								
DRY TS	*(2000 X k) ÷ (a X b X 3.1416)*	(l)								
CALC SSD AT 70% SAT.	*(0.70 X j) + c*	[13]								
CALC. SSD AT 80% SAT.	*(0.80 X j) + c*	[14]								

SATURATED	MINUTES @	[15]	"Hg							
DATE AND TIME IN:		[16]		DATE AND TIME OUT:						
SSD MASS		(m)								
MASS IN WATER		(n)								
VOLUME	*(m - n)*	(o)								
VOL. ABS. H2O	*(m - c)*	(p)								
% SATURATION	*100 X (p ÷ j)*	[17]								

CONDITIONED 24 HOURS IN 140 DEGREE WATER

SSD MASS		(q)								
MASS IN WATER		(r)								
VOLUME	*(q - r)*	(s)								
VOLUME ABS. H2O	*(q - c)*	(t)								
% SATURATION	*100 X (t ÷ j)*	[18]								
PEAK LOAD (Newton's)		(u)								
WET TS (kPa)	(2000 X u) ÷ (a X b X 3.1416)	(v)								
INTERNAL SPECIMEN TEMPERATURE (°F)		[19]								

	Aver. VTM	Aver. Saturation	Aver. Temp.	Median TS	QA/QC Joint Test?	TESTED BY:	[30]
Dry Subset	[20]		[23]	[25]		CERT. NO.:	
Wet Subset	[21]	[22]	[24]	[26]	Circle One	TESTED BY:	[31]
TENSILE STRENGTH RATIO				[27]	***Yes*** ***No***	CERT. NO.:	
QA/QC COMPARATIVE TSR				[28]		LAB LOCATION:	[32]
						LAB CERT NO.:	

Visual Stripping: place x in appropriate box

	[29]			
None	**Minor**	**Moderate**	**Severe**	

Comments: [33]

Note: Attach proposed M&T 601 form when TSR specimens are being submitted to QA

M&T 612

TENSILE STRENGTH RATIO (TSR) TEST WORKSHEET

GENERAL NOTE: This form is to be completed whenever a TSR test is required. It is also submitted with a mix design request to the Materials and Tests Unit for the issuance of a Job Mix Formula.

1. Date Mix Produced – Date TSR test was taken
2. Contractor producing mix
3. Additive (Antistrip) supplier
4. Date TSR specimens were compacted
5. Mix Type
6. Plant location
7. Additive grade
8. Number of Gyrations
9. JMF Number
10. Plant certification number – HiCAMS AS-#
11. Additive dosage
12. Date test completed

The following cells will be calculated 4 times each for dry and 4 times for the wet specimens:

13. Calculated SSD @ 70 % moisture		a) Specimen Diameter
14. Calculated SSD @ 80 % moisture		b) Specimen Thickness
15. Saturated minutes @ No. of inches of Hg (mercury)		c) Dry mass in air
16. Input the time in and out of the water bath		d) SSD mass in air
17. % Saturation		e) Mass in water
18. % Saturation		f) Specimen Volume
19. Internal Specimen Temperature		g) Bulk Specific Gravity
20. Average VTM for dry pills		h) Maximum Specific Gravity – Rice test
21. Average VTM for wet pills		i) % Air Voids
22. Average % Saturation for wet pills		j) Volume of Air Voids
23. Average internal temperature for dry pills		k) Peak Load – dry sub set only
24. Average internal temperature for wet pills		l) Dry Tensile Strength
25. Median Tensile Strength for dry pills		m) SSD Mass
26. Median Tensile Strength for wet pills		n) Mass in Water
27. Tensile Strength Ratio		o) Specimen Volume
28. Results of comparative TSR test performed by either QA or QC		p) Volume of absorbed water
29. Check a box to indicate the stripping on the broken pills.		q) SSD Mass
30. Technician who performed the TSR test & Certification No.		r) Mass in water
31. Second Technician (if applicable) & Certification No.		s) Specimen Volume
32. Lab where the TSR test was performed.		t) Volume of Absorbed Water
33. Comments about the test.		u) Peak Load – wet subset only
		v) Wet Tensile Strength

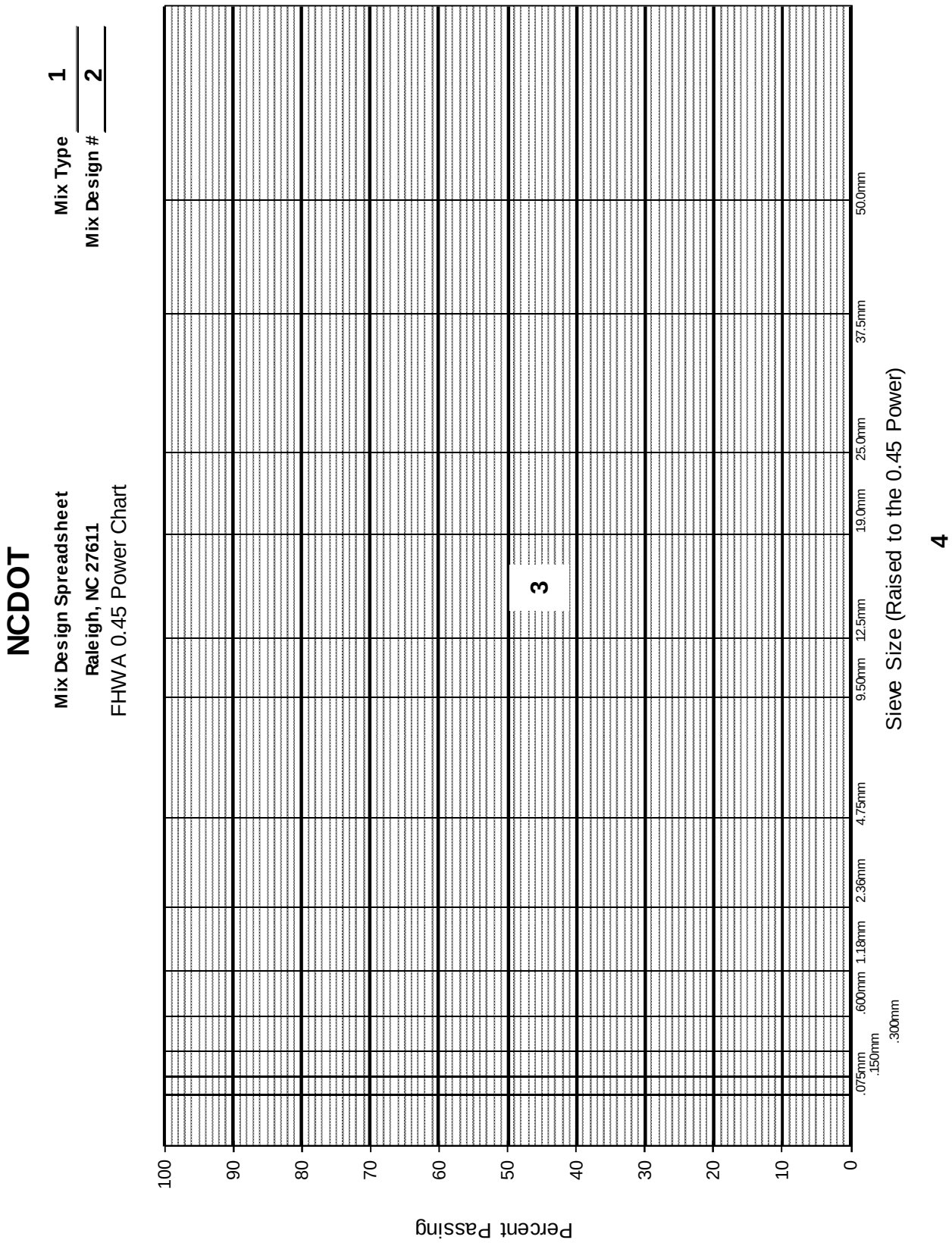
NCDOT
Mix Design Spreadsheet
Raleigh, NC 27611
FHWA 0.45 Power Chart
Mix Type 1
Mix Design # 2
3
4
Percent Passing
100
90
80
70
60
50
40
30
20
10
0
.075mm
.150mm
.300mm
.600mm
1.18mm
2.36mm
4.75mm
9.50mm
12.5mm
19.0mm
25.0mm
37.5mm
50.0mm
Sieve Size (Raised to the 0.45 Power)

FHWA 0.45 Power Chart

GENERAL NOTE: This form is to be completed prior to submitting a mix design to the Materials and Test unit for the issuance of a Job Mix Formula or when a request for a Job Mix formula change in gradation. The original 0.45 Power Chart from the mix design must be included along with the requested change.

1. Mix Type
2. Mix Design/JMF number
3. The Maximum Density line is plotted starting from the maximum size (one size larger than the nominal maximum size) on the top row and connected to the zero value on the left corner on the bottom row.
4. Plot the percent passing values on the line with the corresponding sieves.

QC-1 (Rev.) 1/1/2015

NORTH CAROLINA DEPARTMENT OF TRANSPORTATION
HOT MIX ASPHALT QUALITY CONTROL CERTIFICATION

Contractor: [1] **Plant Location:** [2]

Plant Cert: [3]

DATE SAMPLED: [4]

SAMPLING INFORMATION AND TONNAGES

Project No.	Type Mix	JMF No.	QC Sample No.	Tons @ Sample Time	Time From Ticket	Invoice No.	PROJECT TONNAGES Previous	Today	Total	Sample Taken By
[5]	[6]	[7]	[8]	[9]	[10	[11]	[12]	[13]	[14]	[15]

MOISTURES

Material_ [16] __	Material_ [16] __	Material_ [16] __	Material_ [16] __	Material_ [16] __
Wet Wt._____	Wet Wt._____	Wet Wt._____	Wet Wt._____	Wet Wt._____
Dry Wt._____	Dry Wt._____	Dry Wt._____	Dry Wt._____	Dry Wt._____
% Moist._____	% Moist._____	% Moist._____	% Moist._____	% Moist._____

MIX TEST RESULTS **DATE TESTED:**_____

QC SAMPLE NO.	Gmb @ Ndes (Measured)	Gmm (Rice)	VTM @ Ndes	VMA @ Ndes	VFA @ Ndes	%Gmm @ Nini	25 mm	19 mm	12.5 mm	9.5 mm	4.75 mm	2.36 mm	0.075 mm	% Binder (CONTROL	Dust / Binder Ratio
[17]	[18]														
	[18]														
	[18]														

Anti-Strip Totalizer Flowmeter Readings **Begin** [19] **End** [20] **Gallons of Anti-Strip Used Today** [21]

Remarks: [22]

I certify that all Quality Control Tests were performed on this mix and the results listed above are correct.

[23]

*** Print QC Technician's Name and Hicams #**

[24]

*** QC Technician's Signature**

*** BY PROVIDING THIS DATA UNDER MY SIGNATURE AND / OR HICAMS #, I ATTEST TO THE ACCURACY AND VALIDITY OF THE DATA ON THIS FORM AND CERTIFY THAT NO DELIBERATE MISREPRESENTATION OF TEST RESULTS, IN ANY MANNER HAS OCCURRED.**

QC-1

DAILY HMA QUALITY CONTROL CERTIFICATION

GENERAL NOTE: This form is a general summary of all daily QC test results, tonnage produced, anti-strip additive used, and also serves as a log of all samples taken. This form may be used for more than one project number, different type mixes and different job mix formulas. The form including all data and mix test results is to be completed by Contractor's QC personnel and shall be faxed to the appropriate Division QA Lab no later than the beginning of the following work day, not to exceed 3 calendar days (Except maintenance version sample information shall be faxed no later than 1 calendar day after sample is taken). This form is to be maintained in the QC lab files for a minimum of three (3) years after the date the form is completed. QA personnel will maintain their copy of this form indefinitely unless permission is given otherwise.

1. Name of Contractor producing mix.
2. Actual site of plant producing mix.
3. Current HiCAMS asphalt plant certification number (Example: AS111).
4. Date mix produced and sampled.
5. Project number for which mix is produced and placed.
6. Type mixes produced and placed.
7. Appropriate job mix formula number.
8. QC sample number for mix being sampled.
9. Accumulated daily mix design tonnage at which sample was taken.
10. Actual time on load ticket that sample was taken.
11. Preprinted number on load ticket for truck from which sample was taken.
12. Accumulated project tonnage prior to this date.
13. Project tons of appropriate JMF produced this date.
14. Accumulated project tonnage including this date's tonnage.
15. Initials of QC technician that took sample from sample load.
16. Daily Moistures: (Wet Wt. minus Dry Wt. divided by Dry Wt. x 100 = % Moisture)
17. Appropriate QC Sample Number.
18. Appropriate mix test data. Enter all required test data for type mix tested.

Note: If anti-strip additive is introduced into the asphalt binder at the asphalt plant site, complete nos. 21, 22 & 23. If anti-strip additive is added at the binder terminal site, there will be no entries in these blanks.

19. Totalizer flowmeter reading at the beginning of the production day.
20. Totalizer flowmeter reading at the end of the production day.
21. Gallons of anti-strip additive used this production day (#20 - #19).
22. Any pertinent remarks (include any changes made to control mix properties).
23. Printed name and HiCAMS certification number of technician entering test results on this form.
24. Signature of technician certifying that mix test data is true and correct.

QC-2

12-02-02

NORTH CAROLINA DEPARTMENT OF TRANSPORTATION
HOT MIX ASPHALT QUALITY CONTROL TESTS WORKSHEET
RECORD OF CALIBRATION TEST ON WEIGHING EQUIPMENT AT ASPHALT EQUIPMENT

CONTRACTOR: [1] PLANT LOCATION: [2] DATE: [3]

BATCH PLANT							DRUM PLANT		
INCREMENT NO.	PRIOR WT. ON SCALES (A)	WT. OF TEST WT'S ADDED (B)	ACTUAL TOT. WT. ON SCALES C = (A+B)	SCALE DIAL READING (D)	SCALE ERROR (%) E = D - C	SCALE ERROR (%) $F = \frac{E}{C} \times 100$	AGGREGATE SCALES		
[4]	[5]	[6]	[7]	[8]	[9]	[10]	CERTIFIED SCALES WT. (A)	PLANT SCALES WT. (B)	% ERROR $C = \frac{A-B}{A} \times 100$
							[11]	[12]	[13]
							RAP SCALES		
							CERTIFIED SCALES WT. (A)	PLANT SCALES WT. (B)	% ERROR $C = \frac{A-B}{A} \times 100$
							[11]	[12]	[13]
							ASPHALT METER		
							CERTIFIED SCALES WT. (A)	PLANT SCALES WT. (B)	% ERROR $C = \frac{A-B}{A} \times 100$
							[11]	[12]	[13]
							ADDITIVE METER		
							CERTIFIED SCALES WT. (A)	PLANT SCALES WT. (B)	% ERROR $C = \frac{A-B}{A} \times 100$
							[11]	[12]	[13]

THIS FORM RETAINED IN CONTRACTOR'S QC FILES AT PLANT SITE.
I CERTIFY THE ABOVE AS TRUE CALIBRATION DATA FOR THESE SCALES.

PRINT NAME LEGIBLY-QC LEVEL II TECHNICIAN w/HiCAMS #: [14]

*SIGNATURE – QC LEVEL II TECHNICIAN: [15]

*BY PROVIDING THIS DATA UNDER MY SIGNATURE AND/OR HiCAMS CERTIFICATION NUMBER, I ATTEST TO THE ACCURACY AND VALIDITY OF THE DATA CONTAINED ON THIS FORM AND CERTIFY THAT NO DELIBERATE MISREPRESENTATION OF TEST RESULTS, IN ANY MANNER, HAS OCCURRED.

CC: DIVISION QA LAB

QC-2

RECORD OF CALIBRATION TEST ON WEIGHING EQUIPMENT AT ASPHALT PLANTS

GENERAL NOTE: This form is to be completed by QC personnel at frequencies described below. This form is to be verified and signed by the Contractor's QC Level II personnel with a copy to be forwarded to the Division QA Lab. Minimum calibration frequency for binder and aggregate scales at a batch plant is quarterly. Minimum calibration frequency at a drum mix plant for aggregates scales and binder meters is quarterly. Additive meters shall be calibrated monthly at both batch and drum mix plants. RAP/RAS scales shall be calibrated at the same frequency as aggregate scales, which is quarterly. For the purpose of these scale calibrations, quarterly is defined as once per calendar quarter not to exceed 90 calendar days. QC personnel must give QA personnel at least two days advance notification of all scheduled scale calibrations. QC shall maintain this form in the QC Lab files for at least three (3) years after completion of the form. QA will maintain their copy of this form indefinitely.

1. Name of Contractor producing mix.
2. Site of plant producing mix.
3. Date calibration performed.
4. Number of test increment.
5. Weight readout prior to adding weight to the weigh hopper/asphalt bucket.
6. Weight added at each increment.
7. Actual weight on scales. (A) + (B).
8. Actual scale reading.
9. Scale error in Lbs. (D) – (C).
10. Percent scale error (E) ÷ (C) x 100.
11. Net scales weight from DOA approved scales.
12. Actual scales readout.
13. Percent error (A) – (B) ÷ (A) x 100 to nearest 0.1 percent (x.x).
14. Printed name and HiCAMS certification number of QC Level II Technician.
15. Signature of QC Level II Technician certifying that all data entered on this form is true and correct.

QC-3 (Revised) 3/25/2000

North Carolina Department of Transportation

HMA/QMS

Totalizer Flowmeter for Anti-strip Additive LOG

Contractor: [1]

Plant Certification No. [2]

Plant Location: [3]

Anti-Strip Tank Capacity (gals) [4]

Additive Brand [5]

Dosage [6]

Date	Time	Meter Reading	Signature*	Remarks
[7]	[8]	[9]	[10]	[11]

Note 1 : Separate forms to be maintained for each brand and / or dosage at each plant site.

Note 2 : Readings to be taken and recorded at the beginning, during, and at the end of production each day.

Note 3 : End of the day reading and gallons used must be reported daily on the QC-1 or QC-1 (SP) form.

*** By providing this data under my signature and / or HiCAMS certification number, I attest to the accuracy and validity of the data contained on this form and certify that no deliberate misrepresentation of test results, in any manner, has occurred.**

Sheet No. [12]

QC- 3
ANTI-STRIP ADDITIVE LOG

GENERAL NOTE: This form is used by QC Technicians on a daily basis to record totalizer flowmeter readings when anti-strip additive is introduced into the asphalt binder at the plant site. Readings shall be taken before beginning of production, during mid-production and at the end of production each day. This form is to be maintained in the QC Lab files for at least three (3) years after completion of the form.

1. Name of Contractor producing mix.
2. Plant certification number displayed on plant certification in asphalt plant control room (i.e. AS111).
3. Actual site on which plant is located.
4. Size of anti-strip tank in gallons (i.e. 1500 gal).
5. Type of anti-strip being used.
6. Percent of anti-strip shown on job mix formula.
7. Date totalizer flowmeter is being read.
8. Time totalizer flowmeter is being read.
9. Actual meter reading.
10. Signature of QC Technician reading meter and certifying that all data entered on this form is true and correct.
11. Any remarks technician deems necessary.
12. Consecutive series of numbers for log sheets.

QC-4 (SP)

NORTH CAROLINA DEPARTMENT OF TRANSPORTATION
MOVING AVERAGE CALCULATION WORKSHEET FOR GRADATION

12-20-02

TYPE MIX: [1] JMF NO. [2]

DATE	QC SAMPLE NUMBER	25mm	MOVING AVG. (4)	19mm	MOVING AVG. (4)	12.5mm	MOVING AVG. (4)	9.50mm	MOVING AVG. (4)	4.75mm	MOVING AVG. (4)	2.36mm	MOVING AVG. (4)	0.075mm	MOVING AVG. (4)
[3]	[4]	[5]		[5]		[5]		[5]		[5]		[5]		[5]	
			[6]		[6]		[6]		[6]		[6]		[6]		[6]

* I ATTEST TO THE ACCURACY AND VALIDITY OF THE DATEA CONTAINED ON THIS FORM AND CERTIFY THAT NO DELIBERATE MISREPRESENTATION OF TEST RESULTS, IN ANY MANNER, HAS OCCURRED.

QC-4

MOVING AVERAGE CALCULATION WORKSHEET FOR GRADATION

GENERAL NOTE: This form to be completed by Contractor's QC personnel and maintained at the QC Lab site. The moving average calculation worksheets are used to determine the moving average of the last four applicable test results. This moving average figure(s) shall then be plotted on the appropriate standardized control charts. A computer generated moving average worksheet may be utilized instead of the paper QC-4 Form. This computer worksheet must be backed up so if equipment failure occurs, this information will still be available for review. This form shall be maintained in the QC lab files for a minimum of three (3) years after the last entry date.

1. Type mix produced.
2. Appropriate job mix formula number.
3. Date QC sample taken.
4. QC sample number.
5. All column (5's) will be entries for individual test results of the specified test for this column. All sieves, except the 0.075mm, will be entered to the nearest whole number. The 0.075mm sieve will be entered to the nearest 0.1.
6. All column (6's) will be an average of the last four individual test entries. Moving averages will not be established until the fourth test entry. The averages for all sieves, except the 0.075mm, will be to the nearest whole number. The averages for the 0.075mm sieve will be to the nearest 0.1.

QC-5 Rev. *Rev. 12 / 2013*

NORTH CAROLINA DEPARTMENT OF TRANSPORTATION

DAILY CORE LOCATION & LOT SUMMARY

PROJECT NO. [2] MAP / RT. NO. [3] CONTRACTOR: [4] DATE PLACED: [1]

BASE TYPE: [6] LANE DESC.: [7] BASELINE: [8] PLANT LOCATION: [5]

TYPE MIX: [9] JMF NO.: [10] RES. ENGR. : [11]

CORE #	TEST SECTION			RANDOM #		RAND # x LENG. / WIDTH		TEST SECTION	CORE LOCATION			
	Test Section No.	Length (A)	Width (B)	Length (C)	Width (D)	Length (E = A X C)	Width (F = B X D)	BEGINNING STATION # (G)	Station (G + E)	Dist. From Baseline (F)	CORES SAMPLE THICKNESS	PERCENT COMPACTION
[12]	[13]	[14]	[15]	[16]	[17]	[18]	[19]	[20]	[21]	[22]	[23]	[24]

Lot Average ---> [25]

CONSTRUCTION TYPE: "New" [ ] "Other" [ ] [31]

THE "NEW" CONSTRUCTION CATEGORY WILL BE DEFINED AS PAVEMENTS EXCLUSIVE OF IRREGULAR AREAS MEETING ALL THREE OF THE FOLLOWING CRITERIA:

1.) PAVEMENT PLACED ON A NEW AGGREGATE OR SOIL BASE COMPACTED TO THE SPECIFIED DENSITY OR PAVEMENT PLACED ON A NEW ASPHALT MIX LAYER (EXCLUDING WEDGING LEVELING)
2.) PAVEMENT WHICH IS WITHIN A DESIGNATED TRAVEL LANE OF THE FINAL TRAFFIC PATTERN; AND
3.) PAVEMENT WHICH IS 4.0 FEET OR WIDER.

AS AN EXCEPTION, WHEN THE FIRST LAYER OF MIX IS PLACED ON AN UNPRIMED AGGREGATE BASE AND IS 2.0 INCHES OR LESS IN THICKNESS, THE LAYER WILL BE INCLUDED IN THE "OTHER" CONSTRUCTION CATEGORY.

THE "OTHER" CONSTRUCTION CATEGORY WILL INCLUDE ALL PAVEMENT EXCEPT AS DESCRIBED ABOVE AND ALSO ALL S 4.75 MIX TYPES.

[27]

**PRINT CERTIFIED QC ROADWAY TECHNICIAN'S NAME /W HiCAMS #

[28]

**CERTIFIED QC ROADWAY TECHNICIAN'S SIGNATURE

[29]

**PRINT CERTIFIED QC LAB TECHNICIAN'S NAME /W HiCAMS #

[30]

**CERTIFIED QC LAB TECHNICIAN'S SIGNATURE

[26] Passes

[26-A] Fails

**NOTE: BY PROVIDING THIS DATA UNDER MY SIGNATURE AND / OR HiCAMS CERTIFICATION NUMBER, I ATTEST TO THE ACCURACY AND VALIDITY OF THE DATA CONTAINED ON THIS FORM AND CERTIFY THAT NO DELIBERATE MISREPRESENTATION OF TEST RESULTS, IN ANY MANNER, HAS OCCURRED.

QC-5

DAILY CORE SAMPLE LOCATION AND LOT SUMMARY

GENERAL NOTE: Only results for one density acceptance lot shall be shown on each QC-5 form. "New" and "Other" construction, separate paving operations, different map numbers, different layers of same mix, and core sample control strips constitute separate lots therefore must be shown on separate QC-5 forms. This form shall be initiated by the Contractor's certified QC Roadway Technician or certified Density Gauge Operator by completing blanks numbered 1-22 & 31 at the roadway paving site. The QC core samples and Form QC-5 will be taken to the appropriate QC Lab by QC personnel. When compaction results have been determined, the QC Plant Technician will complete lines 23 - 26A & 29 - 30. QC should maintain a copy for a minimum of three years. The original is returned to the DOT's Roadway Technician as soon as test results are known by the QC Lab Technician. The DOT's Roadway Technician will attach the form to that day's daily roadway report (M&T 605) and forward to the Resident Engineer.

1. Date pavement was placed and compacted.
2. Prime project number from which density core samples were taken.
3. Map or route number mix on which mix is placed; i.e., Map No. 13, SR 1440, etc.
4. Name of Contractor placing and compacting pavement.
5. Location of the asphalt plant producing the mix.
6. Type of base on which asphalt layer is being placed; i.e., existing pavement, ABC, new asphalt layer, subgrade, milled pavement, etc.
7. Location of lane being paved, i.e., Rt. NBL, Lt. EBL, Lt -Y 2-, Rt. Detour 1, etc.
8. Reference base line for use in determining transverse location of density core samples; i.e., Rt. E.P., Centerline E.P., etc.
9. Type mix from which density samples are taken; i.e., S 4.75A, S 9.5B, I 19.0B, etc. Only density samples for one density lot and type mix should be recorded on the QC-5 Form.
10. Job Mix Formula number for mix type being placed and compacted.
11. Name of Project Engineer assigned to contract on which mix is being placed.
12. Sequential core sample nos. per mix type per day assigned by QC Roadway Technician.
    a. QC core samples will have a sequential series of numbers; i.e., 1,2,3,4, etc. These sequential numbers restart each day core samples are taken. If a 2nd paving operation of the same mix type on the same contract occurs on the same day, those QC cores shall be numbered consecutively also except have an "A" suffix ; i.e., 1A, 2A, 3A, 4A, etc.
    b. QC control strip core samples will have a sequential base number with the suffix "QC:" i.e., 1QC, 2QC, 3QC, 4QC, 5QC, etc., for Control Strip No. 1. These sequential numbers will be consecutive for each type mix throughout the life of a contract, i.e., control strip No. 2, 6QC, 7QC, 8QC, 10 QC, etc.
    c. QC check core samples will use the same base numbers of the original core samples being checked except it will have the suffix "C" with a subscript of 1, 2 , 3, i.e., check samples for QC sample no. 4 would be 4C1, 4C2, 4C3.
13. Sequential test section nos. by mix type assigned by Contractor's Roadway Technician.
    a. 2000 L.F. or fraction thereof per day of pavement placed to be numbered as test sections.
    b. QC test sections will have a sequential series of numbers each day; i.e., 1,2,3,4.
    c. These sequential numbers will start over each day pavement is placed.
14. Actual length of density test section. Normally test sections are 2000 L.F. unless a partial test section occurs. Pavement less than 2000 L.F. placed in a day or less than 2000 L.F. left over at the end of the day's paving will constitute partial test sections. If the fraction of a test section remaining at the end of a day is less than 100 linear feet, it is recommended that the density be represented by the results of the previous section provided approved compaction equipment and procedures are used. All pavement placed which is 2000 feet shall be tested as full test sections and should not be divided into lesser lengths unless pre-approved by the Engineer.
15. Actual width of compacted pavement; i.e, 12', 10', 4', etc.
16. Random number used to compute length from beginning of the test section. This random number comes from the random numbers tables in Section 10 of this manual
17. Random number used to compute distance from reference base line to sample location. This random number comes from the random numbers tables in Section 10 of this manual
18. Random number times test section length. (Column A times Column C)
19. Random number times lane width. (Column B Times Column D)
20. Beginning station number of each test section

QC-5

DAILY CORE SAMPLE LOCATION AND LOT SUMMARY
(continued)

21. Actual station that core will be placed (Column E length plus Column G station no.).
22. Distance over from reference baseline to core sample location (Transfer from Column F).
23. Average core sample thickness measured to the nearest 1/16" (Measured by Contractor's QC plant technician).
24. Actual percent compaction of core samples to the nearest 0.1% (Transferred from the QA/QC-5 form by the Contractor's QC plant technician).
25. Average of all the test sections within this one lot (Shown to the nearest 0.1%).
26. Mark "X" if lot passes (If the average for the lot meets the minimum density requirement for this mix type, the lot passes).

26A. Mark "X" if lot fails (If the average for the lot does not meet the minimum density requirement for this mix type, the lot fails).

27. Printed name and HiCAMS certification number of any certified QMS Technician initiating form.
28. Signature of any technician initiating form, certifying that all data entered in columns 1 - 22 on the form is true and correct.
29. Printed name & HiCAMS certification number of certified QC plant technician completing form.
30. Signature of the Certified Level I Plant technician completing form, certifying that all data entered in columns 23 - 26A on the form is true and correct.
31. Mark “X” in the appropriate block for “NEW” or “OTHER”. To qualify as "NEW" construction, the pavement placed must meet all three of the requirements listed above these blocks. If it fails to meet any of these three requirements, it will then be considered in the "OTHER" category.

This Page Intentionally Left Blank

QC-6 (SP)

NORTH CAROLINA DEPARTMENT OF TRANSPORTATION

MOVING AVERAGE CALCULATION WORKSHEET
MIX PROPERTIES

Revised 12-1-2002

TYPE MIX [1] JMF NO. [2] BINDER CONTROL METHOD [3]

DATE	QC SAMPLE NUMBER	$\%G_{mm}$ @ N_{ini}	MOVING AVG. (4)	G_{mb} @ N_{des}	MOVING AVG. (4)	G_{mm} (RICE)	MOVING AVG. (4)	VOIDS (VTM)	MOVING AVG. (4)	G_{se}	MOVING AVG. (4)	P_b	MOVING AVG. (4)	$P_{0.075}$/ AC_{Eff}	MOVING AVG. (4)
[4]	[5]	[6]		[6]		[6]		[6]		[6]		[6]		[6]	
			[7]		[7]		[7]		[7]		[7]		[7]		[7]

*I ATTEST TO THE ACCURACY AND VALIDITY OF THE DATA CONTAINED ON THIS FORM AND CERTIFY THAT NO DELIBERATE MISREPRESENTATION OF TEST RESULTS IN ANY MANNER HAS OCCURRED.

QC-6

MOVING AVERAGE CALCULATION WORKSHEET FOR MIX PROPERTIES

GENERAL NOTE: This form to be completed by Contractor's QC personnel and maintained at the QC Lab site. The moving average calculation worksheets are used to determine the moving average of the last four applicable test results. This moving average figure(s) shall then be plotted on the appropriate standardized control charts. A computer generated moving average worksheet may be utilized instead of this paper QC-6 Form. This computer worksheet must be backed up so if equipment failure occurs, this information will still be available for review. This form shall be maintained in the QC lab files for a minimum of three (3) years after the last entry date.

1. Type mix produced.
2. Appropriate job mix formula number.
3. Method that Contractor elects to determine binder content; i.e., ignition furnace, extraction, etc.
4. Date QC sample taken.
5. QC sample number.
6. All column (6's) will be entries for individual test results of the specified test for that column. All test results to be entered to the significant decimal as specified in Section 7 of this Manual.
7. All column (7's) will be an average of the last four individual test entries. Moving averages will not be established until the fourth test entry. All moving averages will be entered to the same significant decimal as the corresponding individual test result entries.

QC-7 Rev. 12-2002

NCDOT
HOT MIX ASPHALT
QUALITY MANAGEMENT SYSTEM
SAMPLE TAG

CONTRACTOR: ____(1)_____ QC SAMPLE DATE: ___(2)_____

PLANT LOCATION: __(3)_____ PLANT CERT. NO.: ___(4)_____

PROJECT NO.: ____(5)_____ JMF NO.: _____(6)_____

TYPE MIX: _____(7)_____ TYPE SAMPLE: _____(8) _____

QC SAMPLE NO.: ___(9)_____ QC SAMPLE TONNAGE:_ (10) _____

QC TECH'S PRINTED NAME W/ HiCAMS CERT.# ___ (11)_____

*QC TECH'S SIGNATURE _____ (12) _____

* By providing this data under my signature and or HiCAMS certification number, I attest to the accuracy an validity of the data contained on this form and certify that no deliberate misrepresntation in test results , in any maner , has occurred.

QC-7

QMS SAMPLE TAG

GENERAL NOTE: This sample tag will be completed by QC personnel and attached to each sample bag immediately after the sample is taken. White colored tags will be attached to the Department's portion of the split sample and orange colored tags will be attached to the retained portion (referee sample) of the Contractor's sample.

1. Name of Contractor producing mix.
2. Date QC sample taken.
3. Specific site where plant is located.
4. Current NCDOT certification number.
5. Project number from ticket for load sampled.
6. Appropriate job mix formula number.
7. Type of mix being produced.
8. Type of sample being taken (Mix type, blended aggregate, etc.).
9. Sequential sample number per type mix by year.
10. Accumulated yearly mix design tonnage at which sample was taken (This is not total ticket tonnage for the project but accumulated plant tonnage for a mix design for that year's production).
11. Printed name and HiCAMS certification number of QC plant technician taking sample and completing form.
12. Signature of plant technician certifying that the data entered on this form is true and correct.

QC-9 Revised 12/1/2004

North Carolina Department of Transportation

QC Random Sample Worksheet

Contractor [1] Plant Location [2] Mix Type [3] Mix Design No. [4]

Today's Date	Projected Tonnage	Sample Number	Random Number (A)	Increment Tons (B)	C = A x B (C)	Previous Increment Tons (D)	Sample Tonnage E = D + C (E)	End of Last Day's Tonnage (F)	Tons to Today's 1st Sample * G = E - F (G)	Date Sample Taken (H)	Accum. Tonnage @ End of Today (I)	**QC Technician signature
[5]	[6]	[7]	[8]	[9]	[10]	[11]	[12]	[13]	[14]	[15]	[16]	[17]

* If the next regularly scheduled sample tonnage for an increment is not reached, this will be the tonnage remaining from the end of the last day's tonnage to the first sample tonnage the next production day.

NOTE: This form to be completed and faxed to appropriate QA Supervisor prior to production of each mix design each day. Original maintained at QC Lab.

** By providing this data under my signature and/or HICAMS certification number, I attest to the accuracy and validity of the data contained on this form and certify that no deliberate misrepresentation of test results, in any manner, has occurred.

QC-9

QC RANDOM MIX SAMPLE LOCATION WORKSHEET

GENERAL NOTE: This form will be used by QC personnel to calculate all regularly scheduled random sample locations for each mix design at a plant site for a calendar year's production. A new form, beginning with zero accumulated tonnage, will start over each calendar year. A separate form must be used for different mix designs. Random samples for different job mix formula numbers based on the same mix design may be entered on a single form. All tonnage produced, including partial test samples, must be reported to the nearest whole ton on this form. QC technicians shall determine the regularly scheduled random sample location of each 750 ton increment prior to beginning production of that increment. The regular scheduled sample for the current increment shall be taken before determining the next increment's random sample location. The only acceptable method of determining random numbers is by the use of ASTM D3665, Alternative 2, Table 1, in this manual. This form shall be faxed to the appropriate QA Lab prior to production of each mix design each day. Original is retained in QC Lab files for review by QA personnel for a minimum of three (3) years after last sample date entered on each form.

1. Contractor producing mix.
2. Asphalt plant location or site.
3. Type of mix being produced.
4. Mix design number (only one MD number per form).
5. Date of this entry.
6. Number of tons of this mix that Contractor anticipates producing this date.
7. Sequential sample number for mix design being produced.
   a. Full Test Series: First two digits will be last two nos. of the current year followed by a dash (-), followed by a sequential no. beginning with one and progressing up as samples are taken.
   b. Partial Test Series (taken after 100 tons daily if regular sample is not reached): Will be same no. as the full test series no. for that increment, except will be followed by the suffix P1, P2, P3, etc.
8. Random number QC Technician obtains from ASTM D3665 Random Numbers Tables or from the NCDOT's computer spreadsheet program.
9. Increment tonnage (Normally will always be 750 tons).
10. Increment tons times random number.
11. Ending tonnage of previous increment from which sample was taken (Should normally be the end of a 750 ton increment; such as: 0, 750, 1500, 2250, 3000, etc.).
12. Calculated accumulated tonnage at which sample should be taken. Sample should be taken within the same truckload as this calculated tonnage.
13. Accumulated yearly tonnage of this mix design for this plant at the end of the last production day prior to this day's production.
14. If the next regularly scheduled sample tonnage for an increment is not reached, this will be the tonnage remaining from the end of the last day's production to the first sample tonnage the next production day.
15. Date the QC sample (full and/or partial) was actually taken.
16. Accumulated yearly tonnage of this mix design for this plant at the end of date of entry. This blank will only be completed for the last sample entered each day. It then will be transferred to Column (F) for the next production day. Each new calendar year's accumulated tonnage resets to zero.
17. Signature of QC Technician determining random sample tonnage location and certifying that the data entered on this form is true and correct.

QC-11 *NORTH CAROLINA DEPARTMENT OF TRANSPORTATION* 1-1-2007

QMS MIX VERIFICATION CHECKLIST

Contractor:	[1]	Date:	[5]
Plant Site:	[2]	Date of Mix Verification:	[6]
Type Mix:	[3]	Date of Last Production of Mix:	[7]
JMF No.:	[4]		

REQUIRED DOCUMENTATION FOR VERIFICATION
(Each Checked Item Must Be Attached)

MIX TEST DATA

- [8] Binder Content (Attach QA/QC-1)
- [9] $P_{0.075}$ /AC_{Eff} Ratio (Attach QA/QC-1)
- [10] Blended Aggregate Gradation (Attach QA/QC-1)
- [11] Superpave Gyratory Test Data (Attach QA/QC-1)
- [12] % VTM, % VMA, % VFA (Attach QA/QC-1)
- [13] Rice Test (with Dryback, if required) (Attach QA/QC-2)
- [14] $\%G_{mm}$ @ N_{ini} ⟶ (Attach Gyratory printout for N_{des} specimens to QA/QC-1)
- [15] Retained Split Sample (Attach Copy of Sample Tag)

MATERIALS TEST DATA

- [16] Aggregate Stockpile Gradations (Check if current and on file at QC Lab)
- [17] RAP Gradations & % Binder (Check if current and on file at QC Lab)
- [18] Moisture Content (Drum Plant Only, Attach Calculations)

PLANT CHECKS / CALIBRATIONS

- [19] Cold Feed Calibration (Attach Calibration Worksheet)
- [20] Plant Scales Check Current (Check if current and on file at QC Lab)
- [21] AC Meter Calibration Current (Check if current and on file at QC Lab)
- [22] Non-Strip Meter Calibration (If applicable; Check if current and on file at QC Lab)

**MIX VERIFIED BY		**APPROVED BY
QC Level II Technician:	[23]	[25]
		QA Supervisor
HiCAMS Certification No:	[24]	

*Documentation of all tests and calibrations must be attached to this checklist and provided to the QA Supervisor within 1 working day after beginning production of mix.

**BY PROVIDING THIS DATA UNDER MY SIGNATURE AND/OR HiCAMS CERTIFICATION NUMBER, I ATTEST TO THE ACCURACY AND VALIDITY OF THE DATA CONTAINED ON THIS FORM AND CERTIFY THAT NO DELIBERATE MISREPRESENTATION OF TEST RESULTS, IN ANY MANNER, HAS OCCURRED.

QC-11

QMS MIX VERIFICATION CHECKLIST

GENERAL NOTE: This form is a checklist to be used by QC personnel to insure that all mix verification tests, plant checks, and calibrations are performed or current, whichever is applicable. The Contractor's Level II Technician may verify these mix test results for the purpose of beginning production, however documentation of all required tests and calibrations must be attached to or faxed with this checklist to QA Supervisor for review and approval within one working day after beginning production of the mix. Failure by the Contractor to fully comply with these mix verification requirements will result in immediate production stoppage by the Engineer. Normal production of that mix shall not resume until all mix verification sampling and testing, calibrations, and plant inspections have been performed and approved by the Engineer. No test or calibration data is to be shown on the QC-11 form. All data will be shown on the appropriate attached forms. Mix verification shall be performed on all mixes within 45 days prior to beginning mix production. Should a lapse of 45 days or more occur prior to initial production and quality control testing, the mix must be re-verified. Mix obtained from NCDOT or non-NCDOT work may be used for this purpose provided it is sampled, tested, and the test data handled in accordance with current procedures in this manual. If non-NCDOT mix is used for this purpose, the appropriate QA Lab should be notified prior to performing the sampling and testing.

1. Contractor producing mix.
2. Site of plant producing mix.
3. Type mix being verified.
4. Current JMF No. of mix being verified.
5. Date mix verification data submitted to QA Supervisor.
6. Date(s) of actual tests data/calibrations for mix verification.
7. Date of last production of this mix under QMS specification.
8. Check blank indicating that binder content test data is attached.
9. Check blank indicating that $P_{0.075}/P_{be}$ ratio has been computed and shown on QA/QC-1 Form.
10. Check blank indicating that blended aggregate gradation test data is attached.
    (May be washed gradation on recovered aggregate from mix.)
11. Check blank indicating that complete Superpave Gyratory test data is attached.
12. Check blank indicating that %VTM, %VMA, and %VFA calculations are attached.
13. Check blank indicating that Rice test data is attached.
    (If any aggregate absorption is 1.5% or higher, a dry back must be performed with mix verification.)
14. Check blank indicating that $\%G_{mm}$ @ N_{ini} is attached. The gyratory printouts for N_{des} specimen must be attached to the QA/QC-1 form.
15. Check blank indicating that mix verification sample was split, bagged, and tagged for possible testing by QA. Sample shall be retained for 7 calendar days.
16. Check blank indicating that actual washed stockpile gradations of each material in the mix is current and on file at the QC Lab.
17. Check blank indicating that RAP gradation and Binder Content test data is current and on file and meets Section 1012 of the Standard Specifications, if mix being verified is a recycled mix.
18 Check blank indicating that combined moisture content test data for aggregate is attached. (Drum Plant Only.)
19. Check blank indicating that evidence of actual cold feed calibration, at time of mix verification, is attached.
20. Check blank indicating that batch plant scales check/calibration (aggregate and asphalt) is current within required time frame and is on file.
21. Check blank indicating that drum plant AC meter check/calibration is current within required time frame and on file.
22. Check blank indicating anti-strip additive meter check/calibration is current within required time frame and on file. (Only applicable if plant has anti-strip metering system.)
23. Signature of QC Level II technician verifying that all mix verification tests, plant checks, and calibrations, have been performed and mix test results meet the applicable specification requirements.
24. HiCAMS Certification No. of QC Level II technician verifying and signing the checklist.
25. Signature of QA Supervisor. QA Supervisor must verify that Contractors' mix verification meets all specification requirements and approve those results, calibrations, etc. by signing here. The QA Supervisor will return a copy to QC for their records.

QA-1 (SP)
(REV.)

11-07-08

NORTH CAROLINA DEPARTMENT OF TRANSPORTATION
QUALITY ASSURANCE ASPHALT MIX SUMMARY REPORT

TYPE MIX: [1] JMF NO. [2] DATE: [3]

CONTRACTOR: [4] QC SAMPLE NO. [5] QC SAMPLE DATE: [6]

PLANT LOCATION: [7] PLANT CERT. NO. [8] DIVISION: [9]

[10] GRADATION COMPARISON TEST RESULTS

SIEVE	JMF TARGET	INITIAL TEST		W/IN LIMITS OF PRECISION		CHECK TEST		W/IN LIMITS OF PRECISION	
		QA	QC	YES	NO	QA	QC	YES	NO
50.0mm	[A]	[B]	[C]			[E]	[F]		
37.5mm									
25.0mm				[D]				[G]	
19.0mm									
12.5mm									
9.50mm									
4.75mm									
2.36mm									
1.18mm									
0.600mm									
0.300mm									
0.150mm									
0.075mm									

[11] MIX PROPERTIES COMPARISON TEST RESULTS

TEST	JMF/MD TARGETS	INITIAL TEST		W/IN LIMITS OF PRECISION		CHECK TEST		W/IN LIMITS OF PRECISION	
		QA	QC	YES	NO	QA	QC	YES	NO
G_{mm}	[A]	[B]	[C]	[D]		[E]	[F]	[G]	
$G_{mb}@N_{des}$									
%VTM									
%VMA									
%VFA									
Pb									
$P_{0.075}/P_{be}$									
TSR									
$\%G_{mm}@N_{ini}$									

REMARKS: [12]

*PRINT QA SUPERVISOR'S NAME w/HiCAMS#: [13]

*QA SUPERVISOR'S SIGNATURE: [14]

* BY PROVIDING THIS DATA UNDER MY SIGNATURE AND/OR HiCAMS CERTIFICATION NUMBER, I ATTEST TO THE ACCURACY AND VALIDITY OF THE DATA CONTAINED ON THIS FORM AND CERTIFY THAT NO DELIBERATE MISREPRESENTATION OF TEST RESULTS, IN ANY MANNER, HAS OCCURRED.

COPIES TO: CONTRACTOR

QA-1

ASPHALT QUALITY ASSURANCE SUMMARY REPORT

GENERAL NOTE: This form is to be completed by the Division QA Supervisor whenever plant mix quality assurance comparison test(s) are performed. A copy is to be forwarded to the Contractor each time assurance comparison test are performed. The original is to be maintained in the appropriate plant file at the Division QA Lab indefinitely unless permission is given otherwise.

1. Type mix produced.
2. Appropriate Job Mix Formula number.
3. Date QA sample tests performed.
4. Name of Contractor producing mix.
5. QC sample number.
6. Date QC sample was taken.
7. Site of plant producing mix.
8. Current asphalt plant certification number.
9. Division in which asphalt plant is located.
10. Gradation data from QA/QC-1(SP) worksheet.
    A. JMF Target Values for gradation.
    B. Initial QA test result values.
    C. Initial QC test result values.
    D. Are QA/QC initial test result values within limits of precision when results are compared?
    E. QA check test result values, if check test is performed.
    F. QC check test result values, if check test is performed.
    G. Are QA and QC check test result values within limits of precision?

11. Mix properties comparison test results: Data from QA/QC-1SP worksheet.
    A. Mix property targets from JMF or MD, whichever is applicable.
    B. QA initial test result values.
    C. QC initial test result values.
    D. Are QA/QC test result values within limits of precision?
    E. QA check test result values, if check test is performed.
    F. QC check test result values, if check test is performed.
    G. Are QA/QC test result values within limits of precision?

12. Any relative remarks pertaining to test data and/or comparisons on the form.
13. Printed QA Supervisor's name and HiCAMS certification number.
14. QA Supervisor’s signature certifying that all data entered on this form is true and correct.

QA-2
(Revised)

NORTH CAROLINA DEPARTMENT OF TRANSPORTATION

12-17-02

HOT MIX ASPHALT CERTIFICATION

CONTRACTOR: [1] PERIOD: [2] (BEGIN DATE) TO [3] (END DATE)

PLANT LOCATION: [4] PLANT CERT. NO. [5]

PLANT MIX PRODUCED IN ACCORDANCE WITH SPECIFICATIONS			
MIX TYPE	JMF NO.	TONNAGE	REMARKS
[6]	[7]	[8]	[9]

THIS IS TO CERTIFY THAT ALL HOT MIX ASPHALT TONNAGE LISTED ABOVE WAS PRODUCED IN ACCORDANCE WITH THE PROVISIONS OF THE NCDOT QUALITY MANAGEMENT SYSTEM FOR ASPHALT PAVEMENTS. ALL MIX PRODUCED, EXCEPT AS NOTED ON THE ATTACHED FORM QA-2A, MAY BE ACCEPTED AS BEING WITHIN FULL COMPLIANCE OF THE SPECIFICATIONS FOR PLANT MIX TEST PROPERTIES. ACTUAL TONNAGE FOR PAYMENT PURPOSES WILL BE DETERMINED FROM THE CERTIFIED WEIGH TICKETS ISSUED FOR THE APPROPRIATE PROJECT / WORK ORDER, ETC. DOCUMENTATION FOR ACCEPTANCE OF THESE QUANTITIES IS ON FILE AT THE DEPARTMENT'S QA LAB AND THE CONTRACTOR'S QC LAB.

THIS CERTIFICATION DOES NOT INCLUDE EVALUATION FOR DENSITY COMPLIANCE. WITH SPECIFICATIONS.

*PRINT QA SUPERVISOR'S NAME w/HiCAMS#: [10]

QA SUPERVISOR'S SIGNATURE: [11]
DIVISION QA SUPERVISOR

* BY PROVIDING THIS DATA UNDER MY SIGNATURE AND/OR HiCAMS CERTIFICATION NUMBER, I ATTEST TO THE ACCURACY AND VALIDITY OF THE DATA CONTAINED ON THIS FORM AND CERTIFY THAT NO DELIBERATE MISREPRESENTATION OF TEST RESULTS, IN ANY MANNER, HAS OCCURRED.

NOTE: FORM TO BE COMLPETED AND DISTRIBUTED ON A QUARTERLY BASIS. (END OF MARCH, JUNE, SEPTEMBER, AND DECEMBER.)

FORM QA-2A ATTACHED: YES ☐ NO ☐ [12]

CC: STATE MATERIALS ENGINEER

QA-2

HOT MIX ASPHALT ACCEPTANCE CERTIFICATION

GENERAL NOTE: This certification form to be completed and distributed to the State Materials Engineer by the Division QA Supervisor on a quarterly basis (End of March, June, September, and December.) It will be completed for all time periods regardless of whether or not any mix is produced out of a specific plant. This form certifies that all hot mix asphalt tonnage produced for this time period is in accordance with the provisions of the NCDOT Quality Management System for Asphalt Pavements. Any mix produced not meeting these provisions will not be included on this form, but will be included on Form QA-2A. The project Resident Engineer or District Engineer is responsible for determining actual pay tonnage based on project weigh tickets. This form may be used for more than one type mix. This certification does not include evaluation for density or pavement smoothness compliance with the specifications.

1. Contractor producing mix.
2. Beginning date of certification, not to include any previous certification period.
   Beginning dates will be: January 1, April 1, July 1, and October 1.
3. Ending date of certification period.
   Ending dates will be March 31, June 30, September 30, and December 31.
4. Site at which plant is located.
5. Current plant certification number.
6. Type mix produced during certification period.
7. JMF number for appropriate type mix.
8. Total tonnage for certification period which fully complies with the specifications for all mix test properties.
9. Any appropriate remarks.
10. Printed name and HiCAMS certification number of QA Supervisor completing the form
11. Signature of QA Supervisor certifying that all data entered on this form is true and correct.
12. Mark appropriate block for attachment of Form QA-2A. The State Materials Engineer's copies of all appropriate QA-2A forms should be held until the quarterly completion of the QA-2 form. All applicable QA-2A forms will then be attached to the back of the QA-2 form.

QA-2A
(Revised 01-02-14)

NORTH CAROLINA DEPARTMENT OF TRANSPORTATION
MIX DEFICIENCY PAY FACTOR / RETEST FORM

PROJECT NO:	[1]	CONTRACT NO:	[2]
DATE PRODUCED:	[3]	PROJECT ENGINEER:	[4]
CONTRACTOR:	[5]	PLANT LOCATION:	[6]
TYPE MIX / JMF:	[7]	MIX DEFICIENCY:	[8]
INDIVIDUAL TEST LIMIT:	[9]	RETEST LIMIT:	[10]
JMF TARGET:	[11]	TONNAGE:	[12]

TEST RESULTS: QC = [13] V test (if run) = [14]
QA = [15] DR test (if run) = [16]

QC SAMPLE # [17]

1) Is QC or V result outside Retest Limits compared to JMF? YES or NO [18]
2) If YES to #1, then complete RETEST section below.
3) Is QC result outside Individual Limits compared to JMF? YES or NO [19]
4) If YES to #3, calculate Pay Factor adjustment (%). [20]
5) Is V result outside Individual Limit but within Retest Limits* YES or NO [21]
6) If YES to #5, then complete RETEST section below.

RETEST Section

Total Tonnage = [22]

SUBLOTS (tons) #1 = _____ #2 = _____ #3 = _____

Original sample taken from Sublot #_____

Show approximate location of retests on sublots [23]

Retest Results #1 = _____ #2 = _____ #3 = _____ *Original sample: QC* [24]
#1 = _____ #2 = _____ #3 = _____ *Sublot sample: S-#*
Verification sample: V-#

Recommended Action #1 = _____ #2 = _____ #3 = _____ [25]

PROJECT ENGINEER'S FINAL ACTION

The _____% pay factor specified above was applied on Estimate Number_____ Dated _____ [26]
Deficiency Location:_____
NOTE: For any mix accepted under Article 105-3, provide penalty assessed and justification:_____
_____
_____
Signature:_____

Original To: Project Engineer

cc: State Asphalt Design Engineer
State Pavement Construction Engineer
Division QA Supervisor
Division Construction Engineer
Area Roadway Construction Engineer

* Contractor must be notified in writing by Project Engineer of any adjustment / action within 30 calendar days of original QC test.

QA-2A

MIX DEFICIENCY PAY FACTOR / RETEST FORM

GENERAL NOTE: This form shall be used for ALL mix deficiencies and retests (sublots). It is used in the determination of a pay factor for mix which does not meet Specification requirements. It shall be date and plant specific and used for only one mix deficiency, one project number, one type mix, and one JMF number. It will not be utilized for density deficiencies since the QA-2B form will be used for determining density deficiency pay factors. This QA-2A form is initiated by the Division QA Supervisor. The Division QA Supervisor is responsible for determining the actual adjusted pay tonnage and the initially recommended pay factor. Once this is completed and as soon as possible after the mix deficiency occurs, he will inform the Project Engineer and the Area Roadway Construction Engineer (RCE) for concurrence on the Pay Factor. The Area RCE approves all pay factors in HiCAMS. For any major or unresolved issues, contact the State Pavement Construction Engineer for questions of final determination. The original form shall then be returned to the Project Engineer for application and certification of any pay factor applied. The Project Engineer or a representative shall be responsible for distribution of the completed form.

1. Project number for which the mix was produced.
2. Contract number for which mix was produced.
3. Date deficient mix was produced.
4. Project Engineer's printed name (normally either Resident Engineer or District Engineer).
5. Contractor that produced the mix.
6. Location of asphalt plant producing deficient mix.
7. Type mix in which deficiency occurred and JMF number: i.e., RS9.5B / JMF# 15-0100-151.
8. Specific mix requirement not met (Gradation, AC Content, VTM, VMA, etc.), the amount results exceeded the requirement, and whether it applies to an individual test or the moving average.
   For example: VTM exceeded individual limit by 0.5%.
9. Individual Test Limit.
10. Retest Limit.
11. JMF Target.
12. Actual tonnage of deficient mix. This tonnage will be compiled by use of control charts, Form QC-1, and project weigh tickets.
13. Original QC test result.
14. Verification test result (if run in the same lot).
15. QA split test result.
16. Dispute Resolution (DR) test result.
17. Original QC Sample Number.
18. If the QC or V (if run) test results are outside Retest Limits compared to the JMF, then complete Retest section.
19. If the QC test results are outside Individual Limits compared to the JMF, but within Retest Limits, that becomes the penalty range and the Pay Factor adjustment shall be applied.
20. Calculate the Pay Factor adjustment. Reference Section 609 of the Standard Specifications. This shall be a percentage of the unit bid price and not a reduction percentage.
21. If the V test results (if run) is outside Individual Limits, but within Retest Limits, then complete Retest section.
22. Determine SUBLOT tonnage breakdown and fill in the appropriate numbers. Total Tonnage should equal the amounts added from the breakdown and equal the tonnage in Item 12.
23. Fill out locations of tests in the boxes with original QC sample, Sublot samples and V-sample, if taken. Note that the location of the deficient mix sample shall be located on the roadway and random numbers not be used for the sublot.
24. Fill out Retest results in appropriate sections beneath the Sublot boxes.
25. QA Supervisor shall make recommendations on action(s) to be taken based on test results and confer with Project Engineer and Area RCE.
26. Fill out Final Action box with resolution of Pay Factor percentage or any asphalt removed and replaced in the Remarks section. If applying Article 105-3 for mix acceptance, explain Final Resolution and justification. Then, sign the form and distribute to all parties in the cc list.

QA-2B
(Revised)

NORTH CAROLINA DEPARTMENT OF TRANSPORTATION

12-1-2002

DENSITY DEFICIENCY PAY FACTOR RECOMMENDATIONS / ACTIONS

PROJECT NO.: [1] CONTRACT NO.: [2]

DATE PRODUCED: [3] PROJECT ENGINEER: [4]

CONTRACTOR: [5] PLANT LOCATION: [6]

TYPE MIX / JMF: [7] LOT AVERAGE: [8]

Project Engineer's Recommended Pay Factor	Tonnage	Automatic Adjustment (PF)	Not Reasonably Close Conformity Adjusted Pay	Unacceptable Removal / No Pay	Reasonably Acceptable Full Pay
	[9]	[10]			

SIGNATURE: [11] DATE: [12]

COMMENTS: [13]

Division Engineer's Recommended Pay Factor	Tonnage	Automatic Adjustment (PF)	Not Reasonably Close Conformity Adjusted Pay	Unacceptable Removal / No Pay	Reasonably Acceptable Full Pay
	[9]	[10]			

SIGNATURE: [11] DATE: [12]

COMMENTS: [13]

Construction Unit's (PCE) Final Pay Factor	Tonnage	Automatic Adjustment (PF)	Not Reasonably Close Conformity Adjusted Pay	Unacceptable Removal / No Pay	Reasonably Acceptable Full Pay
	[9]	[10]			

SIGNATURE: [11] DATE: [12]

COMMENTS: [13]

PROJECT ENGINEER'S FINAL ACTION

The [14] % pay factor specified above was applied on Estimate Number [15] dated [16] .

Deficiency Location: [17]

Signature: [18]

ORIGINAL TO : PROJECT ENGINEER
CC: STATE MATERIALS ENGINEER
STATE PAVEMENT MANAGEMENT ENGINEER
PAVEMENT CONSTRUCTION ENGINEER
QA SUPERVISOR

* Contractor must be notified in writing by Project Engineer of any adjustment / action.

QA-2B

DENSITY DEFICIENCY PAY FACTOR RECOMMENDATIONS / ACTIONS

GENERAL NOTE: This form is used only when the pay quantities for a contract are not handled through the Department's HiCAMS computer system. It is used in the determination of a pay factor for asphalt densities which do not meet Specification requirements. It shall be used for only one lot's density deficiency, one project number, one type mix, and one JMF number. It will not be utilized for plant mix deficiencies. The QA-2A form will be used for determining mix deficiency pay factors. This QA-2B form is initiated by the Project Engineer (normally either the Resident Engineer or District Engineer). Prior to the actual completion of the form, the Project Engineer shall consult with the Pavement Construction Engineer to determine if an adjustment is necessary. The Project Engineer is responsible for determining the actual adjusted pay tonnage and the initially recommended pay factor. Once this is completed and as soon as possible after the density deficiency occurs, he will forwarded this form to the Division Engineer. The Project Engineer shall also prepare a brief memo to the Division Engineer detailing the density deficiency and attach this form to it. The Division Engineer may elect to either complete his recommendation or assign that responsibility to someone else. Once that is complete, the form will be forwarded to the Pavement Construction Engineer who will consult with the State Construction Engineer prior to completing the final pay factor portion of the form. The final determination of acceptance, pay adjustments, and/or removal is the responsibility of the State Construction Engineer. The original form shall then be returned to the Project Engineer for application and certification of any pay factor applied. The Project Engineer shall be responsible for distribution of the completed form.

1. Project number on which mix was placed.
2. Contract number on which mix was placed.
3. Date density deficiency occurred.
4. Project Engineer's printed name (normally Resident Engineer or District Engineer).
5. Contractor that placed deficient mix.
6. Location of asphalt plant producing mix.
7. Type mix in which deficiency occurred and JMF no.; i.e., RS9.5B JMF# 15-0100-151.
8. Average density of failing lot; i.e. 91.2%. (See Section 10.3.3 of this manual for Lot determination)
9. Actual tonnage of mix with deficient density. This tonnage will be compiled by use of Roadway Technician's Daily Report, Form QC-5, and project weigh tickets.
10. Recommended pay factor as established by Section 609 of the Standard Specifications. This shall be a percentage of the unit bid price and not a reduction percentage. One pay factor percentage figure shall be entered in the appropriate space.
11. Signature of appropriate person making recommendation and / or establishing pay factor.
12. Date of signature.
13. Pertinent comments as deemed necessary by the recommending / establishing person.
14. Final pay factor applied by the Project Engineer.
15. Estimate number on which the specified pay factor was applied.
16. Date of estimate on which pay factor was applied.
17. Beginning and ending station numbers, lane designation, etc., where the deficient densities occurred. This information to be completed by the Project Engineer at time the adjustment is applied.
18. Signature of Project Engineer (normally Resident or District Engineer) verifying the information in items 14 – 17 above is correct and that the adjustment has been applied.

QA-3 11-2015

NORTH CAROLINA DEPARTMENT OF TRANSPORTATION
HOT MIX ASPHALT
QA SAMPLE LOG

TYPE MIX: [1] CONTRACTOR: [2] PLANT LOCATION: [3]

QA/QC SAMPLE NUMBER	QA SAMPLE DATE	JMF NUMBER	PROJECT / CONTRACT NUMBER	TECHNICIAN	QA/QC SAMPLE NUMBER	QA SAMPLE DATE	JMF NUMBER	PROJECT / CONTRACT NUMBER	TECHNICIAN
[4]	[5]	[6]	[7]	[8]	[4]	[5]	[6]	[7]	[8]

AMD # : [9]

QA-3

QA SAMPLE LOG

GENERAL NOTE: This form is used to log in all QA samples taken. A separate form shall be maintained by the Division QA Lab for each type mix for each plant. Forms should be maintained in QA files for a period of three (3) years after the last sample date entered on the form. A new form will be started at the beginning of each calendar year.

1. Type mix logged on this form.
2. Contractor producing mix.
3. Site of plant producing mix.
4. QA/QC sample number.
5. Date QA personnel obtained this mix sample.
6. JMF number which represents this sample.
7. Project/Contract number for this sample.
8. Printed name of QA Technician obtaining sample from QC Lab.
9. Asphalt Mix Design (AMD) number represented by this log sheet.

QA-4 9-15-08

North Carolina Department of Transportation

Inspection of QC Plant and Laboratory Facilities

DATE: _____ TIME ARRIVED: _____ TIME LEFT: _____

CONTRACTOR: _____ PLANT LOCATION: _____ PLANT CERT. # _____

1. ARE CONTRACTOR'S CERTIFICATIONS AND PERMITS CURRENT? ☐ ☐
   REMARKS: _____
2. ARE PUBLIC WEIGHMASTER CERTIFICATES CURRENT? ☐ ☐
   REMARKS: _____
3. ARE SCALES CURRENTLY DOA CERTIFIED? ☐ ☐
   REMARKS: _____
4. ARE REQUIRED EQUIPMENT CHECKS BEING PERFORMED AND RECORDED ON PROPER FORMS? ☐ ☐
   REMARKS: _____
5. HAVE WEEKLY AGGREGATE, RAP AND RAS STOCKPILE GRADATIONS BEEN CHECKED? ☐ ☐
   REMARKS: _____
6. ARE AGGREGATE, RAP AND RAS STOCKPILES WITHIN TOLERANCE? ☐ ☐
   REMARKS: _____
7. ARE SCALES, WEIGHBRIDGES AND METER SYSTEMS IN CALIBRATION ? ☐ ☐
   REMARKS: _____
8. REVIEW QC RANDOM SAMPLING PROCESS (QC-9) ☐ ☐
   REMARKS: _____
9. OBSERVED QC SAMPLING MIX FROM TRUCK. ☐ ☐
   REMARKS: _____
10. OBSERVED QC PERSONNEL SPLITTING MIX SAMPLE ? ☐ ☐
    REMARKS: _____
11. OBSERVED QC PERSONNEL PERFORMING FIELD TEST ? ☐ ☐
    REMARKS: _____
12. DIRECTED QC PERSONNEL TO TAKE MIX SAMPLE/TSR SAMPLE . ☐ ☐
    REMARKS: _____
13. CHECKED FOR PROPER OPERATION OF TESTING EQUIPMENT. ☐ ☐
    REMARKS: _____
14. SAMPLED TRUCK FOR QA VERIFICATION /TSR SAMPLES. ☐ ☐
    REMARKS: _____
15. RETESTED QC GYROTORY SPECIMENS / ROADWAY CORES. ☐ ☐
    REMARKS: _____
16. CHECKED MIX TEMPERATURE IN TRUCKS? ☐ ☐
    REMARKS: _____
17. DIRECTED CONTRACTOR TO REWEIGH LOAD OF MIX ON AN INDEPENDENT SET OF SCALES. ☐ ☐
    REMARKS: _____
18. REVIEW QC FIELD RECORD BOOK FOR ENTRIES OF MIX CHANGES, ETC. ☐ ☐
    REMARKS: _____

COMMENTS: _____

QC LAB TECHNICIAN_____ QA TECHNICIAN: _____

HiCAMS CERTIFICATION No. _____ HiCAMS CERTIFICATION No. _____

NOTE: QA TECHNICIAN WILL REVIEW CHECKLIST WITH QC TECHNICIAN TO POINT OUT ANY DEFICIENCIES . QA TECHNICIAN WILL GIVE ONE COPY TO THE QC TECHNICIAN TO KEEP ON FILE AT QC LAB AND KEEP ONE COPY FOR QA FILES

This Page Intentionally Left Blank

QA-5

NORTH CAROLINA DEPARTMENT OF TRANSPORTATION

Rev. 12-2015

REPORT OF QUALITY ASSURANCE CORE SAMPLE DENSITY RESULTS

Project No.: [1] Resident Engineer: [2]

Contractor: [3] Division: [4] Plant Location: [5]

Core Sample No.	Random Sample No.	Date Placed	Type Mix	JMF. No.	Map / Route Number	Station Number	Lane Descript.	QA Core Results	QC Core Results	Within Limits of Precision?	
										Yes	No
[6]	[7]	[8]	[9]	[10]	[11]	[12]	[13]	[14]	[15]	[16]	

CODE: "R" = Re-Test QC Sample
"V" = Verification Sample
"DR" = Dispute Resolution Core

DISTRIBUTION:
1. Original to Resident Engr.
2. Copy to QC Lab
3. QC Lab to Forward copy to NCDOT Roadway Technician

**NOTE: BY PROVIDING THIS DATA UNDER MY SIGNATURE AND / OR HiCAMS CERTIFICATION NUMBER, I ATTEST TO THE ACCURACY AND VALIDITY OF THE DATA CONTAINED ON THIS FORM AND CERTIFY THAT NO DELIBERATE MISREPRESENTATION OF TEST RESULTS, IN ANY MANNER, HAS OCCURRED.

[17]
**PRINT CERTIFIED QC/QA ROADWAY TECHNICIAN'S NAME w/ HiCAMS #

[18]
**CERTIFIED QC/QA ROADWAY TECHNICIAN'S SIGNATURE

[19]
**PRINT CERTIFIED QA LAB TECHNICIAN'S NAME w/ HiCAMS #

[20]
**CERTIFIED QA LAB TECHNICIAN'S SIGNATURE

QA-5

REPORT OF QUALITY ASSURANCE CORE SAMPLE DENSITY RESULTS

GENERAL NOTE: This form to be completed by QA technicians when performing retesting of QC core samples, testing of quality assurance comparison core samples, and testing of verification core samples. Samples from more than one day's production may be reported on each form. This form shall be initiated by the Department's QA Roadway Technician by completing blanks numbered 1-13 and 17-18 at the roadway paving site. The QA core samples and Form QA-5 will either be taken to the appropriate QA Lab by DOT personnel or placed in a sealed container and delivered to the Contractor's QC Lab for pick up by QA personnel. When compaction results have been determined by the QA Lab, the QA plant technician will complete lines 13,14,15,18, and 19. Distribution will be as follows: QA lab will send the original to the Resident Engineer, fax a copy the Contractor's QC lab and the QC lab will forward a copy to the NCDOT roadway technician.

1. Prime project number from which core sample(s) were taken.
2. Project Engineer in charge of project.
3. Contractor that placed and compacted the mix.
4. Division in which the project is located.
5. Location of plant producing mix for the project
6. Numbering of samples will be as follows:
   a. Retest of a QC core: no. will be the QC number followed by the suffix "R";
   b. QA comparison cores: no. will be the QC sample number followed by suffix "QA"
   c. Verification cores: no. will be the QC test section no. followed by the suffix "V"
   d. Longitudinal joint cores: no. will be the QC test section no. followed by the suffix "J"
7. Random Sample No. used to locate core sample(s).
8. Actual date material was placed and compacted.
9. Type of mix core sample (s) represents; i.e. S9.5B, I19.0C, etc.
10. Job mix formula of type mix being tested.
11. Map or route number on which mix is being placed.
12. Actual station number from which core sample was taken.
13. Location of lane being paved. (Rt. EBL, Lt. SBL, Rt. -Y 4-, etc.)
14. Percent compaction of actual QA core sample to nearest 0.1%.
15. Percent compaction of actual QC core sample to nearest 0.1%.
16. Mark "Yes" if QA and QC results are within acceptable limits of precision or "No" if not.
17. Printed Name and HiCAMS certification number of the certified Roadway Technician completing form
18. Signature of certified Roadway Technician certifying that data entered on this form is true and correct.
19. Printed Name and HiCAMS certification number of the certified QA Lab Technician completing form
20. Signature of certified QA Lab Technician certifying that data entered on this form is true & correct.

QMS-6 (SP)

Request For JMF Change

Revised 9-23-09

Contractor:	1	Mix Type:	2
Plant Location:	3	Existing JMF#:	4
Plant #:	5	Division:	6

Anti Strip Additive

Current Brand / Grade	New Brand / Grade	TSR Results	Old %	New %
7	8	9	10	11

Aggregate Sources and Blend Percentages

Supplier	Material	Source	Old Blend %	New Blend %
12	13	14	15	16
		TOTAL		

Gradation

Sieve Size	JMF Value	Change To
50.0mm	17	18
37.5mm		
25.0mm		
19.0mm		
12.5mm		
9.50mm		
4.75mm		
2.36mm		
1.180mm		
0.600mm		
0.300mm		
0.150mm		
0.075mm		

Volumetric Properties

Property	JMF Value	Change to
Gsb (Bulk Dry S.G.)	19	20
Gse (Effective S.G.)		
Gsa (Apparent S.G.)		
% Pba (Absorption)		
% RAP / Virgin		
Gmm (Rice S.G.)		
Gmb (Lab S.G.)		
VTM%		
VMA%		
VFA%		
Virgin Binder %		
Binder From RAP %		
Other % Binder		
Total % Binder		
Binder Grade		
Mix Temp		

QC Comments: 21

QA Comments: 22

Change Requested By: 23 **Change Date:** 24

QC Level II Technician Date

I have checked that these changes meet the allowable adjustments outlined in section 7 of the HMA QMS Manual

Change Approved By: 25 **Verbal Approval:** 26

QA Supervisor Date

*******Asphalt Laboratory Approval *******

Approved By: 27 **Effective Date:** 28

Date Approved: 29 **New JMF No.:** 30

QMS-6

REQUEST FOR JOB MIX FORMULA CHANGE

GENERAL NOTE: This form shall be used by QC personnel when requesting a change to an existing job mix formula. This form is to be initiated by the QC Level II technician and then forwarded to the appropriate Division QA Supervisor. If a JMF gradation change is requested due to an aggregate blend change, a 0.45 Power Chart with both the old and proposed gradation plotted on same chart must be submitted with the change request form. If the blend change is greater than 10% from the JMF blend, documentation of the new aggregate blend consensus properties (FORM M&T 620-SP) must also be attached. The QA Supervisor will review the requested change(s) and required documentation to ensure that the change(s) is in accordance with "The Allowable Mix Adjustments" in Section 7. The QA Supervisor will then forward this request to the appropriate Asphalt Pavement Specialist, who will either approve or disapprove it.

1. Name of Contractor producing this mix.
2. Type mix produced.
3. Actual site location of plant (shown on JMF).
4. Existing job mix formula number.
5. Current asphalt plant HiCAMS certification number; i.e., AS111.
6. Highway Division in which plant is located.
7. Current brand and grade of anti-strip additive used in this JMF.
8. New brand and grade of anti-strip additive.
9. TSR test results (required if change in anti-strip source or dosage is requested).
10. Existing percentage of anti-strip additive in the job mix formula .
11. New percentage of anti-strip additive requested.
12. Aggregate supplier; i.e., Vulcan, Martin-Marietta, etc.
13. Type of material; i.e., 78M, #67, Screenings, etc.
14. Source where material originates; i.e., Crabtree Quarry, Belgrade Quarry, etc.
15. Existing blend of materials on this job mix formula.
16. Proposed new blend of materials on this job mix formula.

    NOTE: Blend change(s) greater than 10% from original JMF must have aggregate consensus properties rechecked with documentation attached to the QMS-6.

17. Current percent passing each sieve on JMF (show all sieves).
18. Proposed percent passing each sieve for new JMF (show changes only).
19. Current volumetric property values from existing JMF (show all values).
20. Proposed volumetric property values for new JMF (show changes only).
21. Include any pertinent comments by QC Level II Technician.
22. Include any pertinent comments by QA Supervisor.
23. Signature of QC Level II Technician.
24. Date change is requested to be effective.
25. Signature if QA Supervisor giving verbal approval (Must advise Asphalt Pvmt. Spec. to revise JMF).
26. Date Verbal approval is given by the QA Supervisor.
27. Signature of Asphalt Design Engineer or Asphalt Pavement Specialist (See Section 7).
28. Effective date of the new job mix formula.
29. Actual date the change was made.
30. New job mix formula number.

Superpave 2010
QMS-7

North Carolina Department of Transportation
Asphalt Plant Scale Verification

Contractor:	[1]	**Division:**	[2]
Plant Location:	[3]	**Type of Check:**	(Check Blank)
		QC Check :	[5]
Project Number:	[4]	**Directed QA Check :**	

Plant Scales Used for Pay Purposes		
Type Scales :	[6]	
Location :	[7]	
Date of Check: [8]		
	Initial	Recheck
A) Gross Weight	[9]	
B) Tare Weight	[10]	
C) Material Weight	[11]	

Other Approved Scales		
Type Scales :	[6]	
Location :	[7]	
Date of Check: [8]		
	Initial	Recheck
A) Gross Weight	[12]	
B) Tare Weight	[13]	
F) Material Weight	[14]	

NOTE : If certified weighing devices other than platform scales are used, gross and tare weights are not required.

	Wt @Plant Scale	Wt. @ Other Scale	Difference	% Difference	Within +/- 0.4% Tolerance
	C	F	G = C - F	(G / C) x 100	Yes / No
Initial Check	[15]	[16]	[17]	[18]	[19]
Recheck	▼	▼	▼	▼	▼

COMMENTS : [20]

[21]	[23]
QC Supervisor / Technician -- Cert. No.	**Approved By: QA Supervisor -- Cert. No.**
(Printed Name)	*(Printed Name)*
[22]	[24]
QC Supervisor / Technician	**Approved By: QA Supervisor**
(Signature)	*(Signature)*

cc: Resident Engineer (Project Files)
QA Supervisor
Contractor

QMS-7

ASPHALT PLANT SCALE VERIFICATION

GENERAL NOTE: This form shall be used by both QC and QA personnel when reweighing loads of asphalt mix to verify pay weights. QC may check plant weigh scales at their discretion or are required to do so when directed by QA personnel or the Project Engineer. QC shall furnish the appropriate QA Supervisor two copies of the completed form. QA shall retain one copy and furnish one copy to the appropriate Project Engineer.

1. Name of Contractor producing this mix.
2. NCDOT Division in which plant is located.
3. Actual location of plant site.
4. Project number for which mix is being produced.
5. Check appropriate blank, whether at QC's discretion or directed by QA.
6. Type scales will normally be either platform scales or load cells.
7. Location of scales to be utilized. This may be a plant site, quarry site, grain company, etc.
8. Date scales check performed, either initial or recheck date.
9. Total weight of haul truck and asphalt mix from scales at plant site (if platform scales).
10. Weight of haul truck without asphalt mix from scales at plant site (if platform scales).
    NOTE: If certified weighing devices other than platform scales are used, gross & tare wts. not required.

11. Net weight of asphalt mix (10 - 11 if platform scales or net weight if other certified weighing device).
12. Total weight of haul truck and asphalt mix from scales at "Other Approved Scales" (if platform scales).
13. Weight of haul truck without asphalt mix from scales at "Other Approved Scales" (if platform scales).
    NOTE: If certified weighing devices other than platform scales are used, gross & tare wts. not required.

14. Net weight of asphalt mix (12 - 13 if platform scales or net weight if other certified weighing device).
15. Net weight of mix from no. 11, dependent on whether initial or recheck.
16. Net weight of mix from no. 14, dependent on whether initial or recheck.
17. Difference in weights (15 - 16).
18. Percent difference (17 divided by 15 times 100).
19. Mark appropriate blank as to whether or not check meets the 0.4% requirement.
20. Include any pertinent comments by either QC personnel or QA Supervisor.
21. Printed name and certification no. of QC technician performing scales check.
22. Signature of above QC technician.
23. Printed name and certification no. of QA Supervisor monitoring / approving scales check.
24. Signature of above QA Supervisor. This signature verifies QA's approval of the scales check.

INDEX

A

	PAGE NO.
Asphalt Binder Content by Ignition Method	7-33
Acceptance of Mix for Density	10-51
Acceptance Based on Mix Testing	7-63
Aggregate Angularity	2-10
Aggregate Cold Feed System	6-2
Aggregate Consensus Properties	2-10
Aggregate Consensus Properties (Table 1012-1)	2-10
Aggregate Gradation Specification (Table 1005-1)	2-11
Aggregate Quality	2-9
Aggregate Scales Check (Batch Plant)	6-10
Aggregate Scales Check (Drum Plant)	6-19
Aggregate Sources	2-8
Aggregate Storage	6-2
Allowable Mix Adjustments	7-17
Allowable Resampling & Retesting for Mix Deficiencies	7-59
Anti-Strip Additive	2-5
Anti-Strip Additive Introduction at Plant/Terminal	5-7
Asphalt Additives	2-5
Asphalt Content Diagnostic Chart	A-8
Asphalt PG Binder Grades	2-7
Asphalt Binder Scales (Batch Plant)	6-10
Asphalt Binder Storage	2-5
Asphalt Binder Storage & Handling	6-1
Asphalt Binder Properties	2-4
Asphalt Binder Meters (Batch Plant)	6-10
Asphalt Binder Meter System (Drum Plant)	6-20
Asphalt Distributor	9-1
Asphalt Lab Equipment Calibration Requirements	7-4
Asphalt Mix Design Procedures	4-3
Asphalt Mix Types	3-3; 4-12
Asphalt Pavement Control Strips – Density Gauge (QC)	10-25
Asphalt Pavement Control Strips – Core (QC)	10-41
Asphalt Pavement Structure Design	3-1
Asphalt Paver	9-12
Asphalt Materials	2-1
Asphalt Placing Operations	9-16
Asphalt Plant Certification	5-1
Asphalt Plant Checklist	5-3
Asphalt Plant Pollution Control Equipment	6-25
Asphalt Plant Scale and Meter Calibration (Batch Plant)	6-10
Asphalt Plant Types	5-1

	PAGE NO.
Asphalt Roller Types	9-25
Asphalt Technician Certification Prerequisites	1-8
Asphalt Technician Certification Program	1-4
Asphalt Temperature - Volume Relationships	2-7
Auger, Asphalt Paver	9-13
Automatic Control of Proportioning and Mixing	6-9
Automatic Screed Controls and Operations	9-20

B

Batch Plant Operation and Components	5-5
Batch Plant Operations	6-6
Batch Plant Scale Calibration	6-10
Batch Weights, Setting of	6-11
Binder Contents, Typical	3-4
Binder Grades (PG)	2-7
Breakdown Rolling	9-32

C

Calculations, QMS Field	7-55
Calibrating Lab Equipment	7-4
Certification of Asphalt Plants	5-1
Certification Requirements (Technicians)	1-5
Certification Types (Technicians)	1-5
Check Core Samples	10-47
Classification of Asphalt Types	2-2
Class Enrollment Procedures	1-7
Clay Content	2-10
Coarse Aggregate Angularity	2-10
Cold Feed Blend Ratio Calibration	6-4
Cold Feed Systems	6-2
Compaction of Asphalt Pavements	9-23
Compensation for Recycled Asphalt Pavements	8-6
Computer Program, Mix Design Spreadsheet	4-8
Computer Program, QMS Spreadsheet	12-1
Control Chart Example	7-21
Control Limits (Mix)	7-19
Control Strip, Contractor (QC)	10-25
Control Strip, Core Samples	10-40
Control Strip, Department (QA)	10-35
CoreLok Test Procedure (Compacted Mix Bulk Specific Gravity)	7-46
CoreLok Test Procedure (Maximum Specific Gravity)	7-42
Core Sample Numbering (QC)	10-40
Core Sample Specific Gravity Determination	7-44; 7-46
Core Samples, Random Locations	10-43

	PAGE NO.
Corrective Actions/Mix Problems	7-19
Cumulative Straightedge Index (CSI)	11-5

D

Definitions of Asphalt Terminology	A-1
Delivery & Acceptance of Asphalt Materials	2-5
Density Acceptance	10-51
Density Core (QC) Control Procedures	10-40
Density Gauge (QC) Control Procedures	10-25
Density Gauge Standard Counts	10-26
Density Gauge Test Sections	10-30
Density Testing Methods	10-9
Design Criteria (Table 610-3)	4-9
Design of Asphalt Pavement Structures	3-1
Design of Asphalt Mixtures	4-1
Determining Number of Density Gauge Test Sections	10-32
Distributor, Asphalt	9-1
Distributor Spray Bar	9-2
Documentation, Records and Reports	12-1
Draindown Test (Uncompacted Asphalt Mix)	7-53
Drum Mix Plant Operation and Components	5-6
Drum Mixer Dryer	6-22
Drum Plant - Asphalt Binder Meter System	6-20
Drum Plant - Moisture Test	7-30
Drum Plant - Weight Measurement of Aggregate	6-19
Drum Plant Cold Feed System	6-18
Drum Plant Operations	6-18
Drum Plant Specification Requirements	5-6
Drum Plant Surge - Storage Bins	6-22
Drum Plant Vibratory Scalping Screen	6-19

E

Emulsified Asphalts	2-3
Emulsified Asphalt Types (Figure 2-4)	2-7
Enrollment Procedures for NCDOT QMS Asphalt Classes	1-7
Ethics and Falsification	1-11

F

Failure to Stop Production -- Mix	7-20
Falsification of Records	12-2
Field Laboratory	7-2
Field Laboratory Equipment List	7-2
Field Laboratory Equipment Calibrations	7-4
Field Test Procedure for Gyratory	7-37

	PAGE NO.
Field Mix Verification	7-16
Final Surface Testing	11-2
Fine Aggregate Angularity	2-10
Finish Rolling	9-33
Flash Point of Asphalt	2-5
Flat and Elongated Aggregate Test	2-10
Forms, QMS	12-3
Full Test Series (Mix)	7-10

G

Gradation Analysis of Aggregates	7-28
Gradation Analysis of Recovered Aggregate	7-31
Grade Reference Systems for Pavers	9-20
Gyratory Field Test Procedure	7-37

H

Handling of RAP/RAS Material	8-4
Handwork	9-23
Haul Trucks	9-11
Hauling Asphalt Mixtures	6-24
Hot Bin Sampling	6-11
Hot Bin, Determining Percentages	6-13
Hot Mix Placing Operations	9-16
Hot Mix Recycling	8-1

I

Ignition Test Method (AC Content)	7-33
Incidental Tools for Paving Operations	9-11
Independent Assurance Samples (IAS)	1-9; 10-55

J

Job Mix Formulas	4-8
Job Mix Formula, Example	4-13
Job Mix Formula Numbering System	4-12
Job Mix Formulas, Project File Procedures	4-11
Joint Matching Device	9-20

L

Laboratory Equipment	7-2
Laboratory Equipment Calibrations	7-4
Laboratory, Field	7-2
Laboratory Technician Assessment Program	1-9
Layer Depth Guidelines	3-3

	PAGE NO.
Lift Thickness Guidelines	3-3
Load Tickets	6-24; 10-3
Loading Trucks (3 Dump Loading)	6-23
Longitudinal Joints	9-37
Loss of Certification	1-10; 12-2
Lot Determination (Density)	10-10
Limited Production --Density	10-54
Limited Production --Unsatisfactory Laydown	10-8
Limits of Precision --Density	10-35; 10-50
Limits of Precision --Mix Properties	7-61

M

Malfunction of Automatic Plant Controls	6-25
Mat Problem Trouble-Shooting Guide	A-10
Mat Slope Gauge	10-7
Material Transfer Vehicle (MTV)	9-15
Maximum Specific Gravity Test (G_{mm} Test)	7-40; 7-42
Maximum Aggregate Size	2-9
Mix Design Process	4-3
Milling of Asphalt Pavements	8-7
Minimum Density Requirements (Table 610-6)	10-10
Minimum Sampling and Testing Schedule, Plant	7-9
Mix Adjustments, Allowable	7-17
Mix Control Criteria	7-10; 7-19
Mix Design Criteria	4-8
Mix Design Request	4-8
Mix Temperature (Plant – Table 610-1)	6-2; 10-6
Mix Temperature (Roadway)	6-24; 10-6
Mix Types	3-3
Mix Verification	7-16
Mobile Grade Reference Systems	9-20
Moisture Test	7-30

N

NCDA & CS Scales Certification	5-8
NCDOT Mix Design Procedures	4-9
Nominal Maximum Aggregate Size	2-9; 4-4
Non-Nuclear Gauges	10-9
Numbering Density Gauge Control Strips	10-26
Numbering Density Core Samples	10-40
Numbering Mix Samples	7-22

P

	PAGE NO.
Partial Test Series (Mix)	7-11
Pavement Layer Depth Guidelines	3-3
Pavement Removal	8-7
Pavement Core Samples	10-13
Pavement Smoothness	11-1
Pavement Structure	3-1
Paver	9-12
Paver Screed Unit	9-14
Paver Tractor Unit	9-13
PG Binder Grades, Superpave	2-7
Phases of Rolling	9-32
Placing Operations	9-8; 9-16
Placing, Handwork	9-23
Planning Paving Operations	9-9
Plant Certification	5-1
Plant Checklist	5-3
Plant Mix Deficiency Chart	A-7
Platform Scales	5-8
Pneumatic-Tired Rollers	9-26
Pollution Control Equipment	6-25
Pre-Paving Meeting	9-9
Prime Coat	9-4
Prime Coat Calculation Example	9-5
Processing of RAP/RAS Material	8-4
Profile Testing	11-1
Performance Characteristics Considered in Mix Design	4-1
Public Weighmaster	6-24

Q

QMS for Asphalt Pavements	1-1
QMS Calculations	7-55
QMS Forms, Summary	12-3
QMS Minimum Sampling Schedule	7-9
QMS Technician Certification Program	1-4
QMS Technician Qualifications	1-3
QMS Technician Requirements	1-4
Quality Assurance of Density and Testing	10-35
Quality Assurance Program (QAP)	12-1
Quality Control of RAP/RAS	8-4
Quality Control Plan, Contractor’s	1-1
Quartering of Mix Samples	7-24

R

	PAGE NO.
Random Numbers Table (Density)	10-15
Random Numbers Table (Mix)	7-13
Random Sampling Locations for Density	10-14
Random Sampling Locations for Mix Tests	7-11
RAP, New Source Gradation & Binder Tolerances (Table 1012-4)	8-5
RAP/RAS Material, QC, Handling, & Processing	8-4
RAP, Superpave Mix Design Criteria (Table 610-4)	8-2
Rate of Spread	3-3, 10-5
RAS, New Source Binder & Gradation Tolerances (Table 1012-2)	8-6
Reclaimed Asphalt Pavement (RAP)	8-1
Reclaimed Asphalt Shingles (RAS)	8-1
Records and Reports	12-1
Recycled Mix, Compensation	8-6
Recycled Mix, Composition (Mix Design & JMF)	8-2
Recycled Mix, Job Mix Formula	4-10
Recycling Methods	8-1
Reduction in Pay – Density	10-51
Reduction in Pay – Mix Properties	7-19
Reduction of Samples to Test Size (Quartering)	7-24
Renewal of Certification	1-7
Reports and Reporting Procedures	12-1
Retention of QMS Records	12-2
Retests for Mix Deficiencies	7-59
Reweighing Loads for Verification	6-25
Rice Test (Max Specific Gravity)	7-40
Rideability Specifications	11-2
Roadway Operations Checklist	10-1
Roller Pattern	9-34
Roller Requirements	9-24
Rollers	9-25
Rollers, Pneumatic-Tired Rollers	9-26
Rollers, Steel-Wheeled	9-25
Rollers, Vibratory	9-26
Rolling Longitudinal Joints	9-37
Rolling Procedures	9-27
Rolling Transverse Joints	9-35
Rolling, Breakdown	9-32
Rolling, Finish	9-33
Rolling, Intermediate	9-33

S

Sample Location for Mix (Full Test Series)	7-11
Sample Location for Mix (Partial Test Series)	7-11

	PAGE NO.
Sampling Frequencies (Mix)	7-9
Sampling Frequencies (Density)	10-12
Sampling Procedures	7-22
Sampling Schedule (Mix)	7-9
Sand Equivalency Test	2-10
Scales Certification	5-8
Screed	9-13
Screed Operation	9-18
Seasonal Limitations	9-9
Segregation Diagnostic Chart	A-11
Segregation of Mixes on the Roadway	9-18
Segregation of Plant Mixes	6-23
Setting Batch Weights	6-11
Shoulder Wedge	9-23
Sieve Analysis	7-31
Significant Decimals --Plant Mix	7-55
Significant Decimals --Roadway	9-39
Silicone Additive	2-5
Silos (Drum Plant)	6-22
Ski Pole Profile Control System	9-20
Slope Gauge	10-7
Sonic Profile Control System	9-22
Specific Gravity of Compacted Asphalt Mixtures	7-44; 7-46
Spray Bar	9-1
Spreading and Finishing	9-10
Standard Counts (Density Gauge)	10-26
Steel-Wheeled Rollers	9-25
Stringline for Edge Alignment	9-16
Stringline for Grade Control	9-20
Stripping Test (TSR)	7-48
Sub-Lots for Retesting	7-59
Superpave Aggregate Gradation Requirements	4-8
Superpave PG Binder Grades	2-7
Superpave Mix Design Process	4-3
Superpave Technician Certification Requirements	1-8
Surface Smoothness	11-1
Surface Testing	11-2
Surface Texture	10-8
Surge Storage Bins (Drum Plant)	6-22

T

Tack Coat	9-6
Tack Coat Application Rates	9-6
Tack Coat Application Temperatures	9-7

	PAGE NO.
Tack Coat Rate Calculations	9-8
Tandem Rollers	9-25
Tanker Sampling	2-6
Target Density, Density Gauge, QC/QA	10-26
Technician Assessment Program	1-9
Technician Certification Renewal	1-7
Technician Certification Requirements	1-5
Technician Qualifications	1-3
Technician Responsibilities	2-1
Temperature Limitations	9-10
Temperature of Mix	6-2; 6-24; 10-6
Temperature / Volume Relationships (Binder)	2-7
Tender Mixes	9-30
Test Procedures (Plant Mix)	7-26
Test Sections (Density)	10-12; 10-30; 10-33; 10-36
Testing Frequency (Mix)	7-9
Testing Frequency (Density)	10-12
Testing of Asphalt Mixes	7-1
Tickets, Weigh	6-24
Tools, Incidental for Paving Operations	9-11
Totalizer Flowmeter Guidelines	5-7
TransTech Density Gauge	10-9; 10-30; 10-35
Transverse Joints	9-35
Transverse Joints, Paper	9-36
Transverse Joints, Rolling	9-36
Troxler Density Gauge	10-9; 10-30; 10-35
Truck Scales	5-8; 6-25
Trucks, Haul	9-11
TSR Procedures	7-48
Typical Section, Pavement Structure	3-4

V

Verification Sampling (Plant Mix)	7-60
Verification Sampling (Density)	10-35; 10-36; 10-37; 10-50
Verification Sampling (TSR)	7-50
Verification of Mix Properties	7-16
Vibratory Rollers	9-26
Visual Inspection of Hot-Mix Asphalt	10-4
Volumetric Calculations	7-55

W

Warm Mix Asphalt (WMA)	5-7; 7-16; 7-38; 7-50
Washed Gradation Test	7-27
Weather Limitations	9-9

	PAGE NO.
Website Address – Materials & Tests Unit	i
Website Address – QAP Login Access	12-1
Website Address – QMS Training Schools	1-5
Weighmaster Requirements	6-24
Weigh Bridge	6-19
Weight Certificates (Weigh Tickets)	6-24 & 10-3
Weighing Asphalt Materials	6-24

APPENDIX

DEFINITIONS and TERMINOLOGY PERTAINING TO ASPHALT PAVEMENT PRODUCTION and CONSTRUCTION

(*ASTM Definitions)

AGGREGATE - A hard inert granular material of mineral composition such as sand, gravel, slag, or crushed stone, used in pavement applications either by itself or for mixing with asphalt mixing in graduated fragments.

Types:

COARSE AGGREGATE - Aggregate retained on the 2.36mm (No. 8) sieve.

COARSE-GRADED AGGREGATE - One having a continuous grading in sizes of particles from coarse through fine with a predominance of coarse sizes.

DENSE-GRADED AGGREGATE - An aggregate that has a particle size distribution such that when it is compacted, the resulting voids between the aggregate particles, expressed as a percentage of the total space occupied by the material, are relatively small.

FINE AGGREGATE - That passing the 2.36mm (No. 8) sieve.

FINE-GRADED AGGREGATE - One having a continuous grading in sizes of particles from coarse through fine with a predominance of fine sizes.

OPEN-GRADED AGGREGATE - One containing little or no mineral filler in which void spaces in the compacted aggregate are relatively large.

WELL-GRADED AGGREGATE - Aggregate graded from the maximum size down to filler with the object of obtaining an asphalt mix with a controlled void content and high stability.

AIR VOIDS- Empty spaces (air pockets) in a compacted mix surrounded by asphalt coated particles, expressed as a percentage by volume of total compacted mix.

APPARENT SPECIFIC GRAVITY, (G_{sa}) – the ratio of the mass in air of a unit volume of an impermeable material at a stated temperature to the mass in air of equal density of an equal volume of gas-free distilled water at a stated temperature.

ASPHALT* - A dark brown to black cementitious material in which the predominating constituents are bitumens which occur in nature or are obtained in petroleum processing. Asphalt is a constituent in varying proportions of most crude proportions.

ASPHALT BINDER- A term utilized in the Superpave Mix Design System to classify the grade of asphalt cement used in an asphalt mix based on expected performance under specific environmental conditions (high and low temperatures) and anticipated traffic loading. It can be either modified or unmodified asphalt cement as long as it complies with AASHTO M 320, Specification for Performance Graded Asphalt Binder.

ASPHALT CEMENTS * - A fluxed or unfluxed asphalt specially prepared as to quality and consistency for direct use in the manufacture of asphalt pavements.

ASPHALT LEVELING COURSE - A course of hot mix asphalt (usually a relatively fine graded asphalt aggregate mixture) of variable thickness used to eliminate irregularities in the contour of an existing surface prior to placing the subsequent course.

AUTOMATIC DRYER CONTROL* - A system that automatically maintains the temperature of aggregates discharged from the dryer within a preset range.

AUTOMATIC PROPORTIONING CONTROL* - A system in which proportions of the aggregate and asphalt fractions are controlled by means of gates or valves which are opened and closed by means of self-acting mechanical or electronic machinery without any intermediate manual control. The system includes preset timing devices to control the desired periods of dry and wet mixing cycles.

BASE COURSE - The layer of material immediately beneath the surface or intermediate course. It may be composed of crushed stone, crushed slag, crushed or uncrushed gravel and sand, or hot mix asphalt, typically with larger size aggregate.

BATCH PLANT* - A manufacturing facility for producing asphalt paving mixtures that proportions the aggregate constituents into the mix by weighed batches and adds asphalt binder by weight. The aggregates are first fractionated through a screening deck into hot bins from which they are proportioned into a weigh hopper. The batch of aggregates are emptied into a pugmill where the asphalt binder is weighed in and mixed to form the completed asphalt mixture.

BITUMEN* - A class of black or dark-colored (solid, semisolid, or viscous) cementitious substances, natural or manufactured, composed principally of high molecular weight hydrocarbons, of which asphalts, tars, pitches, and asphaltites are typical.

BLEEDING (FLUSHING) - Is the upward movement of asphalt in an asphalt pavement resulting in the formation of a film of asphalt on the surface. The most common cause is too much asphalt in one or more of the pavement courses, resulting from too rich a plant mix, an improperly constructed seal coat, too heavy a prime or tack coat, or solvent carrying asphalt to the surface. Bleeding or flushing usually occurs in hot weather.

BULK SPECIFIC GRAVITY, G_{sb} – the ratio of the mass in air of a unit volume of a permeable material (including both permeable and impermeable voids normal to the material) at a stated temperature to the mass in air of equal density of an equal volume of gas-free distilled water at a stated temperature.

COAL TAR* - A dark brown to black cementitious material produced by the destructive distillation of bituminous coal.

COLD FEED BINS - Bins that store the necessary aggregate sizes and feed them to the dryer drum of the asphalt plant in substantially the same proportions as are required by the Job Mix Formula for the mix being produced.

COLD MIX (Cold Patch) - A mixture of emulsified asphalt and aggregate; produced in a central plant (plant mix) or mixed at the road site (mixed-in-place).

COMPACTION - The act of compressing a given volume of material into a smaller volume. Insufficient compaction of the asphalt pavement courses may result in rutting on the pavement surface and/or early oxidation due to the intrusion of air and water. Compaction is usually accomplished by rolling.

CONSENSUS PROPERTIES - Aggregate characteristics that are critical to well performing hot mix asphalt, regardless of the aggregate source, and whose limiting values are set by the Superpave specification. There are four aggregate consensus properties: 1) coarse aggregate angularity, 2) fine aggregate angularity, 3) flat and elongated particles, and 4) clay content.

CONSISTENCY - Describes the degree of fluidity or plasticity of asphalt binder at any particular temperature. The consistency of asphalt binder varies with temperature; therefore, it is necessary to use a common or standard temperature when comparing the consistency of one asphalt binder with another. The standard test temperature is 140°F (60°C).

CONTINUOUS MIX PLANT - A manufacturing facility for producing asphalt paving mixtures that proportions those aggregate and asphalt constituents into the mix by a continuous volumetric proportioning system without definite batch intervals.

CORRUGATIONS (WASHBOARDING AND SHOVING) - Types of pavement distortion. Corrugation is a form of plastic movement typified by ripples across the asphalt pavement surface. Shoving is a form of plastic movement resulting in localized bulging of the pavement surface. These distortions usually occur at points where traffic starts and stops, on hills where vehicles brake on the downgrade, on sharp curves, or where vehicles hit a bump and bounce up and down. They occur in asphalt layers that lack stability. Lack of stability may be caused by a mixture that is too rich in asphalt, has too high a proportion of fine aggregate, has coarse or fine aggregate that is too round or too smooth, or has asphalt cement that is too soft. It may also be due to excessive moisture, contamination due to oil spillage, or lack of aeration when placing mixes using liquid asphalt.

CRACKS - Breaks in the surface of an asphalt pavement. The common types are:

ALLIGATOR CRACKS - Interconnected cracks forming a series of small blocks resembling an alligator's skin or chicken-wire, caused by excessive deflection of the surface over unstable subgrade or lower courses of the pavement.

EDGE JOINT CRACKS - The separation of the joint between the pavement and the shoulder, commonly caused by alternate wetting and drying beneath the shoulder surface. Other causes are shoulder settlement, mix shrinkage, and trucks straddling the joint.

LANE JOINT CRACKS - Longitudinal separations along the seam between two paving lanes caused by a weak seam between adjoining spreads in the courses of the pavement.

REFLECTION CRACKS - Cracks in asphalt overlays that reflect the crack pattern in the pavement structure underneath. They are caused by vertical or horizontal movements in the pavement beneath the overlay, brought on by expansion and contraction with temperature or moisture changes.

SHRINKAGE CRACKS - Interconnected cracks forming a series of large blocks usually with sharp corners or angles. Frequently they are caused by volume change in either the asphalt mix or in the base or subgrade.

SLIPPAGE CRACKS - Crescent-shaped cracks that are open in the direction of the thrust of wheels on the pavement surface. These result when there is a lack of good bond between the surface layer and the course beneath.

CRUSHER-RUN* - The total unscreened product of a stone crusher.

CUTBACK ASPHALT - Asphalt cement which has been liquefied by blending with a petroleum solvent (also called a diluent). Upon exposure to atmospheric conditions the diluent evaporates, leaving the asphalt cement to perform its function. Due to environmental problems, cutbacks are no longer used by the NCDOT.

DENSITY - The degree of solidity (compaction) that can be achieved in a given mixture, which will be limited only by the total elimination of voids (zero air voids) between particles in the mass. Density is expressed as a percentage of the maximum specific gravity of the mix.

DRUM MIX PLANT - A manufacturing facility for producing asphalt paving mixtures that continuously proportions the aggregate constituents into the mix through its cold feed system, dries the aggregate, and adds a proportional amount of asphalt binder through a metering system into the same drum. The aggregates are fed from calibrated cold feeds into the dryer drum mixer where the aggregates are dried and then asphalt sprayed in and mixed to form the completed asphalt mixture. Variations of this type of plant use several types of drum modifications, separate (and smaller) mixing drums, and coating units (coater) to accomplish the mixing process.

DISTORTION - Pavement distortion is any change of the pavement surface from its original shape.

DRYER - The component of the asphalt plant that dries and heats the aggregates to the specified temperatures. Dryers are large cylindrical drums through which the aggregates pass. An open flame is used to dry and heat the aggregates.

DUCTILITY - The ability of a substance to be drawn out or stretched thin. While ductility is considered an important characteristic of asphalt binder in many applications, the presence or absence of ductility is usually considered more significant than the actual degree of ductility.

DURABILITY - The property of an asphalt paving mixture that describes its ability to resist disintegration by weathering and traffic. Included under weathering are changes in the characteristics of the asphalt, such as oxidation and volatilization, and changes in the pavement and aggregate due to the action of water, including freezing and thawing.

EFFECTIVE ASPHALT CONTENT, P_{be} – the total asphalt content of a mix minus the portion of asphalt absorbed into the aggregate particles.

EFFECTIVE SPECIFIC GRAVITY, G_{se} – the ratio of the mass in air of a unit volume of a permeable material (excluding voids permeable to asphalt) at a stated temperature to the mass in air of equal density of an equal volume of gas-free distilled water at a stated temperature.

EMULSIFIED ASPHALT - An emulsion of asphalt cement and water that contains a small amount of an emulsifying agent, a heterogeneous system containing two normally immiscible phases (asphalt and water) in which the water forms the continuous phase of the emulsion, and minute globules of asphalt form the discontinuous phase. Emulsified asphalt may be of either the anionic (electro-negatively charged asphalt globules), or cationic (electro-positively charged asphalt globule types), depending upon the emulsifying agent. Upon exposure to atmospheric conditions the water evaporates, leaving the asphalt cement to perform its intended function.

FATIGUE RESISTANCE - The ability of asphalt pavement to withstand repeated flexing or slight bending caused by the passage of wheel loads. As a rule, the higher the asphalt binder content, the greater the fatigue resistance.

FLEXIBILITY - The ability of an asphalt pavement structure to conform to settlement of the foundation. Generally, flexibility of the asphalt paving mixture is enhanced by high asphalt content.

FULL-DEPTH ASPHALT PAVEMENT - The term FULL-DEPTH (registered by The Asphalt Institute with the U.S. Patent Office) certifies that the pavement is one in which asphalt mixtures are employed for all courses above the subgrade or improved subgrade. A Full-Depth asphalt pavement is laid directly on the prepared subgrade.

HOT BINS - Bins in a batch plant that store the heated and separated aggregates prior to their final proportioning into the mixer.

HOT MIX ASPHALT (ASPHALT CONCRETE) - A high quality, thoroughly controlled uniform mixture of asphalt binder and well-graded aggregate fractions, thoroughly compacted into a uniform dense mass. The asphalt mixture is normally produced through an asphalt plant, then placed by a paving machine and compacted by asphalt rollers.

IMPERMEABILITY - The resistance an asphalt pavement has to the passage of air and water into or through the pavement.

LIFT - A layer or course of paving material applied to a base or a previous layer.

MANUAL PROPORTIONING CONTROL* - A control system in which proportions of the aggregate and asphalt fractions are controlled by means of gates or valves which are opened and closed by manual means. The system may or may not include power assist devices in the actuation of gate and valve opening and closing.

MESH* - The square opening of a sieve.

MINERAL DUST - The portion of the fine aggregate passing the 0.075mm (No. 200) sieve.

MINERAL FILLER - A finely divided mineral product at least 70 percent of which will pass a 0.075mm (No. 200) sieve. Pulverized limestone is the most commonly manufactured filler, although other stone dust, hydrated lime, Portland cement, and certain natural deposits of finely divided mineral matter are also used.

OPEN-GRADED ASPHALT FRICTION COURSE - A pavement surface course that consists of a high-void, asphalt plant mix that permits rapid drainage of rainwater through the course and out the shoulder. The mixture is characterized by a large percentage of one-sized coarse aggregate. This course prevents tire hydroplaning and provides a skid-resistant pavement surface.

PAVEMENT STRUCTURE - A pavement structure with all its courses of asphalt-aggregate mixtures, or a combination of asphalt courses and untreated aggregate courses placed above the subgrade or improved subgrade.

PENETRATION* - The consistency of a bituminous material expressed as the distance in tenths of a millimeter (0.1 mm) that a standard needle vertically penetrates a sample of the material under specified conditions of loading, time, and temperature.

PERFORMANCE GRADED (PG) - Asphalt binder grade designations used in Superpave; based on the binders mechanical performance at critical temperatures and aging conditions. This system directly correlates laboratory testing to field performance through engineering principles.

PLANT SCREENS - Screens located in a batch plant between the dryer and hot bins which separate the heated aggregates into the proper hot bin sizes.

POISE - A centimeter-gram-second unit of absolute viscosity, equal to the viscosity of a fluid in which a stress of one dyne per square centimeter is required to maintain a difference of velocity of one centimeter per second between two parallel planes in the fluid that lie in the direction of flow and are separated by a distance of one centimeter.

POLYMER MODIFIED ASPHALT BINDER – A conventional asphalt cement to which a styrene block copolymer or styrene butadiene rubber (SBR) latex or neoprene latex has been added to improve performance.

QUALITY MANAGEMENT SYSTEM (QMS) – North Carolina's name for its Quality Control/Quality Assurance (QC/QA) program for asphalt pavements in which the asphalt contractor is responsible for the quality control and the NCDOT is responsible for the quality assurance.

QUARTERLY - Occurring once within each quarter of the calendar year; specifically, once during Jan.- Mar., once during Apr.- Jun., once during Jul.-Sep., and once during Oct.- Dec. For the purposes of NCDOT required asphalt plant scales checks and calibrations, quarterly shall be within this time frame but not to exceed 90 calendar days.

RAVELING - The progressive separation of aggregate particles in a pavement from the surface downward or from the edges inward. Raveling is caused by lack of compaction, construction of a thin lift during cold weather, dirty or disintegrating aggregate, too little asphalt in the mix, or overheating of the asphalt mix.

RUTS (CHANNELS) - Grooves that develop in the wheel tracks of a pavement. Ruts may result from consolidation or lateral movement under traffic in one or more of the underlying courses, or by displacement in the asphalt surface layer itself. They may develop under traffic in new asphalt pavements that had too little compaction during construction or from plastic movement in a mix that does not have enough stability to support traffic.

SAND ASPHALT - A mixture of sand (natural and/or manufactured) and asphalt cement. It may be prepared with or without special control of aggregate grading and may or may not contain mineral filler. Either mixed-in-place or plant mix construction may be employed. Sand asphalt is used in construction of both base and surface courses.

SIEVE* - In laboratory work an apparatus in which the openings are square for separating sizes of material.

SKID RESISTANCE - The ability of an asphalt paving surface, particularly when wet, to offer resistance to slipping or skidding. The factors for obtaining a high skid resistance are generally the same as those for obtaining high stability. Proper asphalt content and aggregate with a rough surface texture are the greatest contributors. The aggregate must not only have a rough surface texture, but also resist polishing.

SOLUBILITY - A measure of the purity of an asphalt binder. The ability of the portion of the asphalt binder that is soluble to be dissolved in a specified solvent. Inert matter, such as salts, free carbon, or non-organic contaminants are insoluble.

STABILITY - The ability of asphalt paving mixture to resist deformation from imposed loads. Stability is dependent upon both internal friction and cohesion.

STOKE - A unit of kinematic viscosity, equal to the viscosity of a fluid in poises divided by the density of the fluid in grams per cubic centimeter.

SUBBASE - The course in the asphalt pavement structure immediately below the base course is called the subbase course. If the subgrade soil is of adequate quality, it may serve as the subbase.

SUBGRADE - The soil prepared to support a structure or a pavement system. It is the foundation of the pavement structure. The subgrade soil sometimes is called "basement soil" or "foundation soil".

STABILIZED SUBGRADE – Subgrade that has been improved as a working platform by: (1) the incorporation of granular materials or stabilizers such as asphalt, lime, or portland cement into the subgrade soil; or (2) any course or courses of select or improved material placed on the subgrade soil below the pavement structure.

SUPERPAVE™- Short for "Superior Performing Asphalt Pavement" – a performance-based system for selecting and specifying asphalt binders and for developing an asphalt mix design. SUPERPAVE is a product of the Strategic Highway Research Program (SHRP) established by Congress in 1987 to improve the performance and durability of U.S. roads.

SUPERPAVE GYRATORY COMPACTOR (SGC) – A device used during Superpave mix design or field testing activities for compacting samples of hot mix asphalt into specimens used for volumetric analysis. Continuous densification of the specimen is measured during the compaction process.

SUPERPAVE MIX DESIGN - A mix design system that integrates the selection of materials (asphalt, aggregate) and volumetric proportioning with the project's climate and design traffic.

VISCOSITY - Is a measure of the resistance to flow. It is one method of measuring the consistency of asphalt.

ABSOLUTE VISCOSITY - A method of measuring viscosity using the poise as the basic measurement unit. This method utilizes a partial vacuum to induce flow in the viscometer.

KINEMATIC VISCOSITY - A method of measuring viscosity using the stoke as the basic measurement unit.

VOIDS - Empty spaces (air pockets) in a compacted mix surrounded by asphalt coated particles.

VOIDS IN TOTAL MIX (VTM) - Total empty spaces (air pockets) in a compacted mix expressed as a percentage of the total solid volume.

VOIDS in the MINERAL AGGREGATE (VMA) – the volume of void space (air pockets) between the aggregate particles of a compacted mix that includes both the VTM and the effective asphalt content, expressed as a percentage of the total volume of the compacted mix.

VOIDS FILLED WITH ASPHALT (VFA) - The percentage of the voids in the mineral aggregate structure that are filled with asphalt, not including the adsorbed asphalt. It is expressed as a ratio of (VMA – VTM) to VMA.

WET MIXING PERIOD - The interval of time between the beginning of application of asphalt binder and the opening of the mixer gate in a batch plant.

WORKABILITY - The ease with which paving mixtures may be placed and compacted.

Possible Causes of Deficiencies in Asphalt Paving Mixtures

Aggregates Too Wet	Inadequate Bunker Separation	Aggregate Feed Gates Not Properly Set	Over-Rated Dryer Capacity	Dryer Set Too Steep	Improper Dryer Operation	Temp. Indicator Out of Adjustment	Aggregate Temperature Too High	Worn Out Screens	Faulty Screen Operation	Bin Overflows Not Functioning	Leaky Bins	Segregation of Aggregates in Bins	Carryover in Bins Due to Overloading Screens	Aggregate Scales Out of Adjustment	Improper Weighing	Feed of Mineral Filler Not Uniform	Insufficient Aggregates in Hot Bins	Improper Weighing Sequence	Insufficient Asphalt	Too Much Asphalt	Faulty Distribution of Asphalt to Aggregates	Asphalt Scales Out of Adjustment	Asphalt Meter Out of Adjustment	Undersize or Oversize Batch	Mixing Time Not Proper	Improperly Set or Worn Paddles	Faulty Dump Gate	Asphalt and Aggregate Feed Not Synchronized	Occasional Dust Shakedown in Bins	Irregular Plant Operation	Faulty Sampling	*Types of Deficiencies That May Be Encountered In Producing Plant-Mix Paving Mixtures.*
		A												B	B				A	A	A	B	C	B	B	B		C			A	Asphalt Content Does Not Check Job Mix Formula
	A	A						B	B	B	B	A	A	B	B	B	A							B		B	B	C	B		A	Aggregate Gradation Does Not Check Job Mix Formula
	A	A							B	B	B	A	A	B	B	B	A							B	B			C	B		A	Excessive Fines in Mix
A			A	A	A	A	A																							A		Uniform Temperatures Difficult to Maintain
											B			B	B									B								Truck Weights Do Not Check Batch Weights
														B	B					A	A	B	C	B		B		C				Free Asphalt on Mix in Truck
																		B									B					Free Dust on Mix in Truck
A			A	A	A	A													A		A	B	C	B	B	B		C		A		Large Aggregate Uncoated
									B	B	A	A	A	B	B	B	A	B			A	B	C		B	B	B	C	B	A		Mixture in Truck Not Uniform
																		B			A			B	B	B				A		Mixture in Truck Fat on One Side
					A															A	A	B	C	B				C		A		Mixture Flattens in Truck
		A			A	A	A																							A		Mixture Burned
A			A	A	A	A			B										A			B	C	B				C		A		Mixture Too Brown or Gray
														B	B	B	A			A	A	B	C	B				C		A		Mixture Too Fat
					A	A	A																							A		Mixture Smokes in Truck
A			A	A	A	A																								A		Mixture Steams in Truck
					A	A	A												A										A	A		Mixture Appears Dull in Truck

"A" – Applies to Batch & Drum Mix Plants

"B" – Applies to Batch Mix Plants

"C" – Applies to Drum Mix Plants

ASPHALT CONTENT DIAGNOSTIC CHART

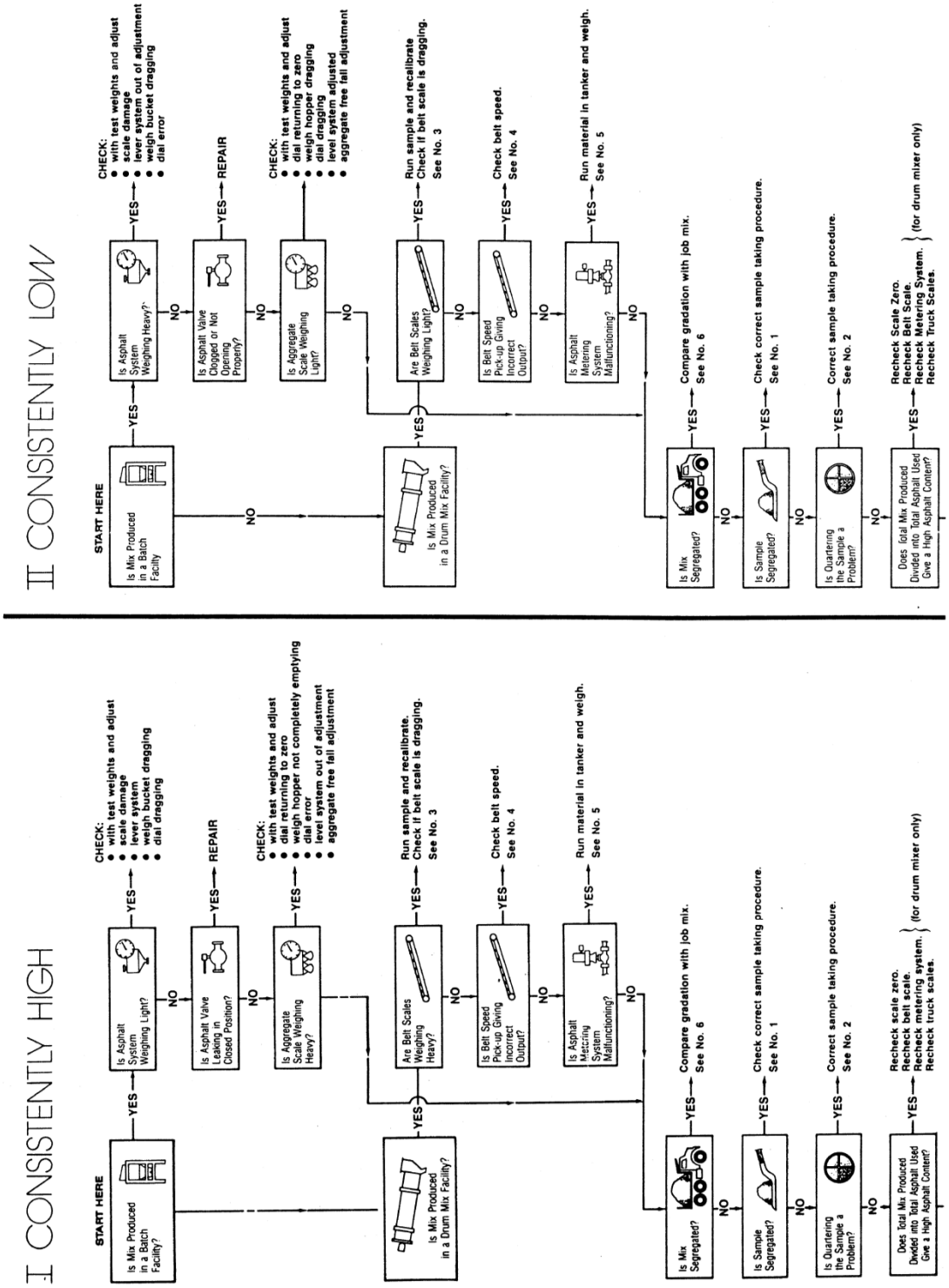

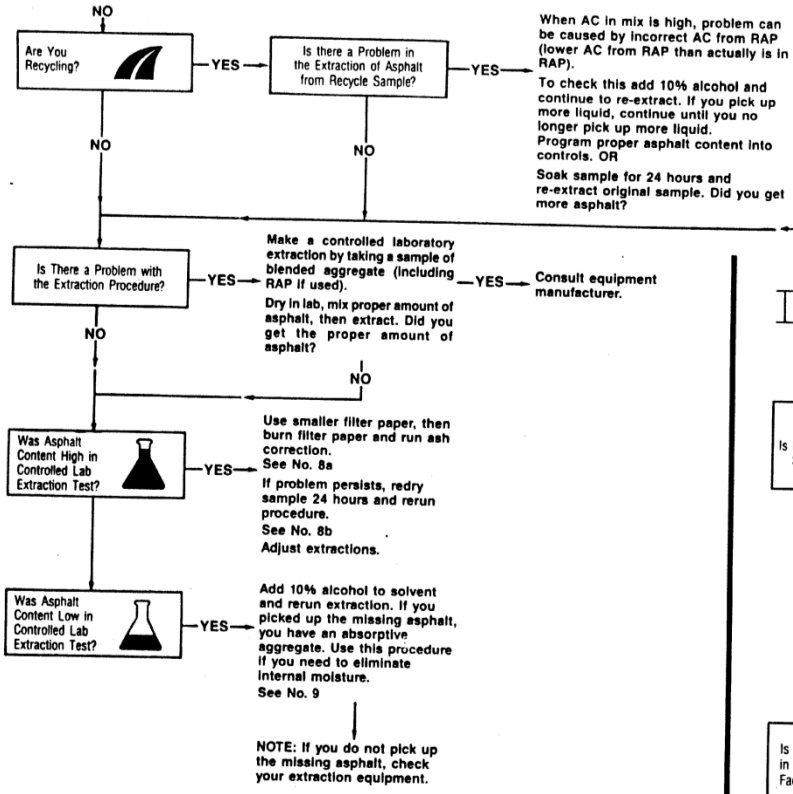

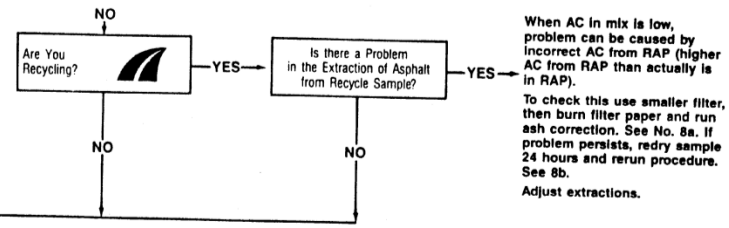

III VARYING HIGH TO LOW

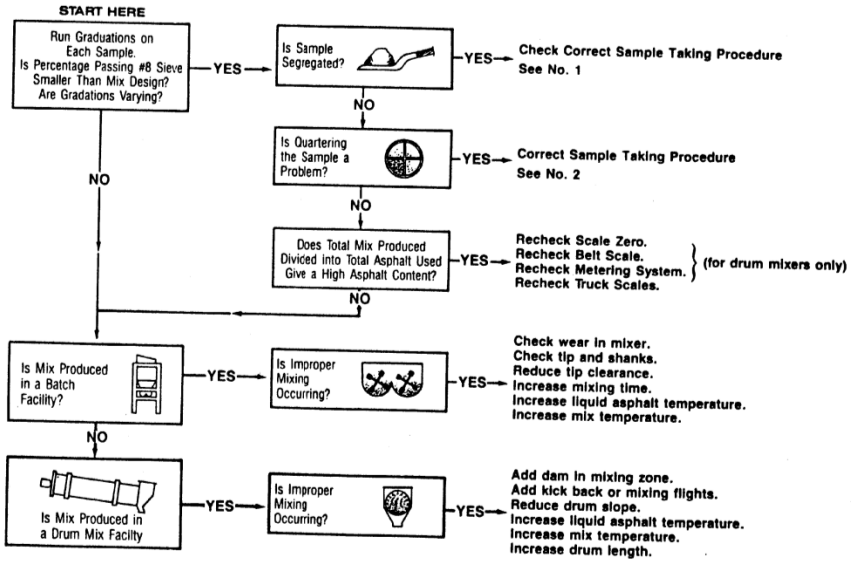

If none of above locate problem, see:

I — Asphalt content consistently high; OR
II — Asphalt content consistently low.

napa
NATIONAL ASPHALT PAVEMENT ASSOCIATION
National Asphalt Pavement Association
6811 Kenilworth Avenue, Riverdale, MD 20737 (301) 779-4880

MAT PROBLEM TROUBLE-SHOOTING GUIDE

PROBLEM \ CAUSES	Fluctuating Head of Material	Feeder Screws Overloaded	Finisher Speed Too Fast	Too Much Lead Crown in Screed	Too Little Lead Crown in Screed	Overcorrecting Thickness Control Screws	Excessive Play in Screed Mechanical Connection	Screed Riding on Lift Cylinders	Screed Plates Worn Out or Warped	Screed Plates Not Tight	Moldboard on Strikeoff Too Low	Running Hopper Empty Between Loads	Kicker Screws Worn Out or Mounted Incorrectly	Feeder Gates Set Incorrectly	Cold Screed	Incorrect Nulling of Screed	Screed Starting Blocks Too Short	Screed Extensions Installed Incorrectly	Vibrators Running Too Slow	Grade Control Hunting (Sensitivity Too High)	Grade Control Mounted Incorrectly	Grade Control Wand Bouncing on Reference	Sitting Long Period Between Loads	Grade Reference Inadequate	Improper Mat Thickness for Max. Agg. Size	Improper Joint Overlap	Trucks Bumping Finisher	Truck Holding Brakes	Reversing or Turning Too Fast or Rollers	Improper Base Preparation	Improper Rolling Operation	Parking Roller on Hot Mat	Improper Mix Design (Aggregate)	Mix Segregation	Moisture in Mix	Variation of Mix Temperature	Cold Mix Temperature
Wavy Surface — Short Waves (Ripples)	✓	✓	✓					✓	✓		✓												✓	✓	✓	✓							X	X			X	X	X		X	
Wavy Surface — Long Waves	✓	✓				✓		✓	✓					✓	✓								✓			✓	✓			X	X	X		X	X			X		X	
Tearing of Mat — Full Width			✓							✓		✓																	X								X	X	X	X	X	X
Tearing of Mat — Center Streak					✓					✓		✓				✓	✓																									X
Tearing of Mat — Outside Streaks				✓						✓		✓	✓			✓				✓																						X
Mat Texture — Nonuniform	✓	✓	✓						✓	✓	✓	✓		✓						✓	✓						✓		X			X				X	X	X		X	X
Screed Marks								✓																						X	X										
Screed Not Responding to Correction			✓					✓	✓		✓												✓						X											X	X
Auger Shadows		✓																																			X	X	X			
Poor Precompaction			✓						✓												✓								X			X									X
Poor Longitudinal Joint	✓	✓				✓			✓														✓	✓	✓			✓					X								X
Poor Transverse Joint		✓						✓	✓		✓								✓	✓													X								X
Transverse Cracking (Checking)																																X	X			X	X		X	X	
Mat Shoving Under Roller																																X	X	X		X	X		X	X	
Bleeding or Fat Spots in Mat																																				X	X		X	X	
Roller Marks																																X	X	X	X					X	
Poor Mix Compaction																																X	X	X	X	X	X		X	X	X

1. Find problem above.
2. Checks indicate causes related to the paver. X's indicate other problems to be investigated.

NOTE: Many times a problem can be caused by more than one item, therefore, it is important that each cause listed is eliminated to assure solving the problem.

BARBER-GREENE

SEGREGATION DIAGNOSTIC CHART

RANDOM SEGREGATION

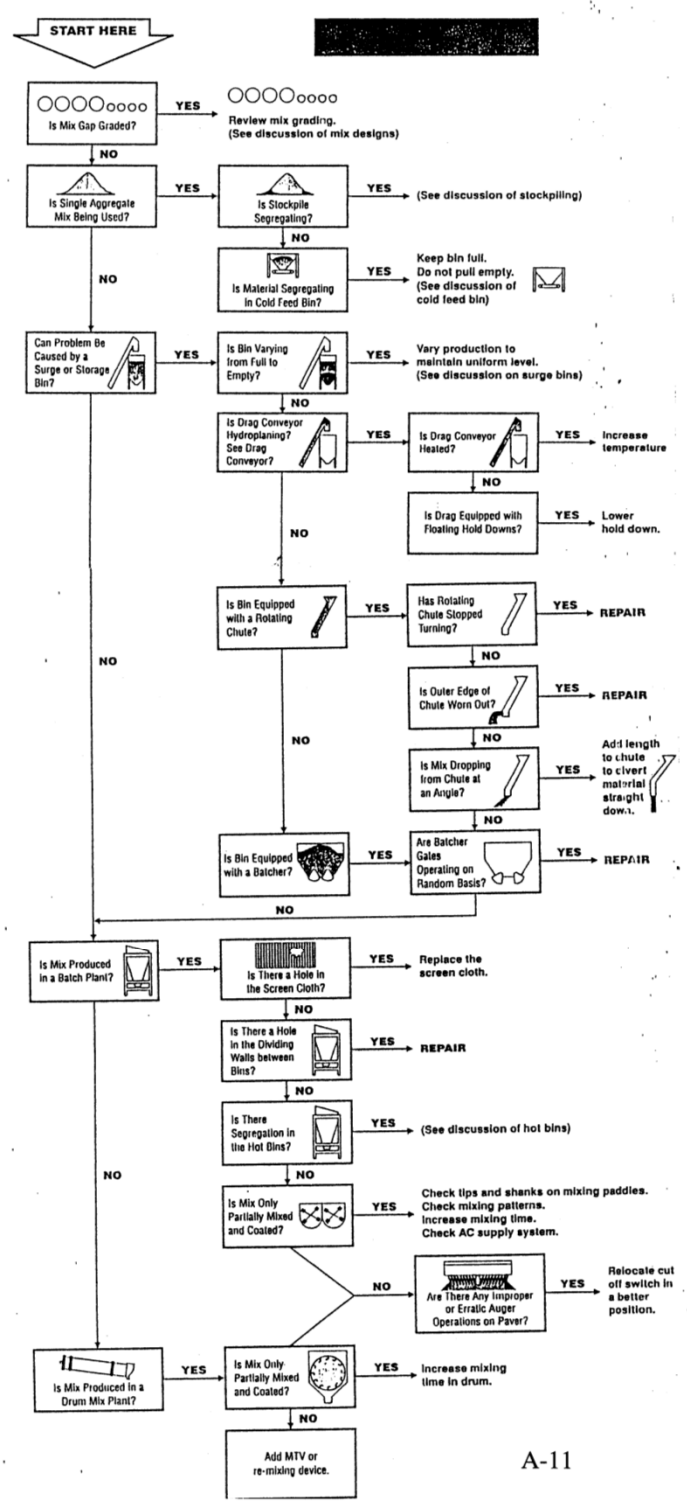

A-11

TRUCK END SEGREGATION

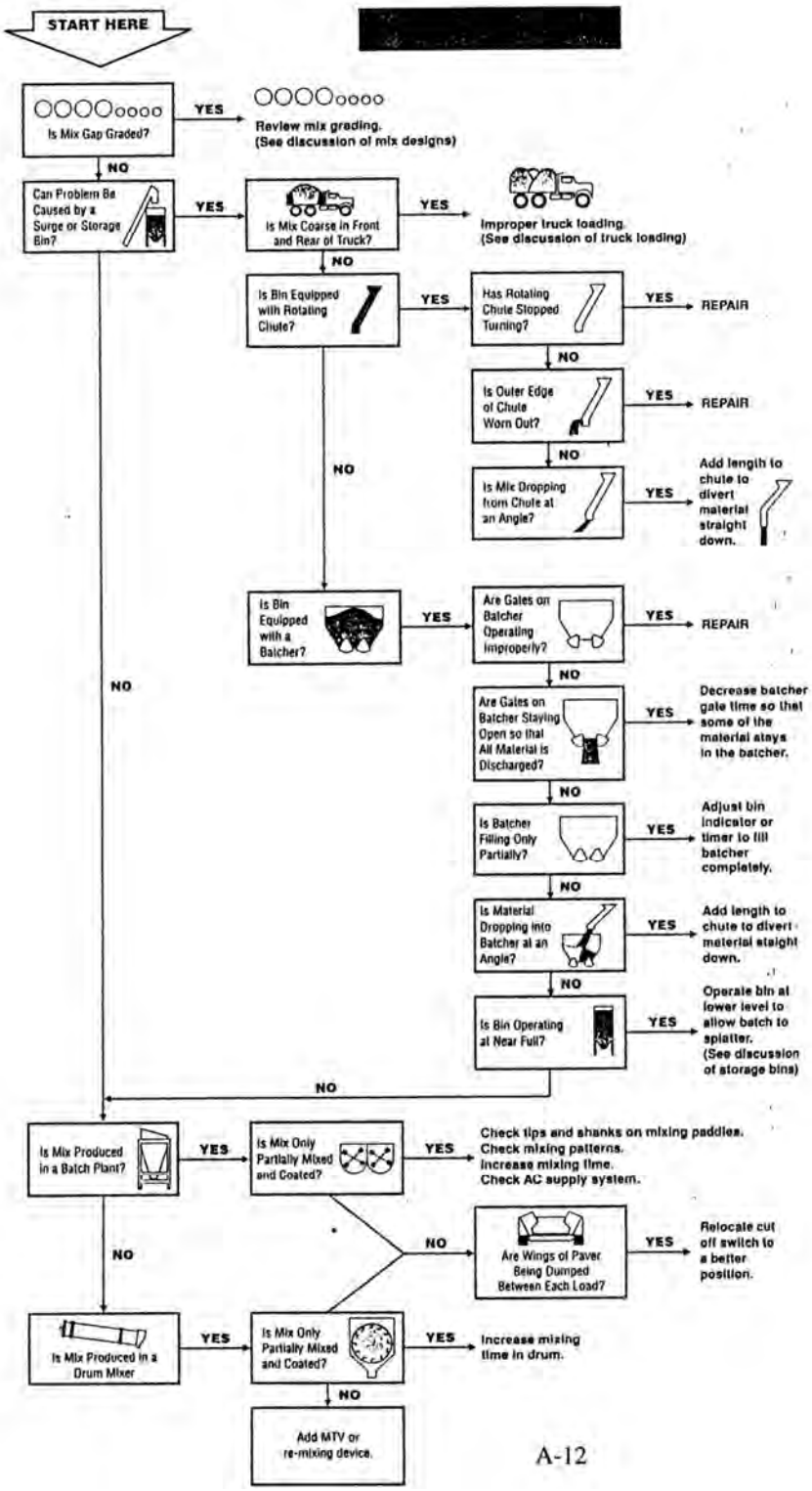

CENTERLINE SEGREGATION

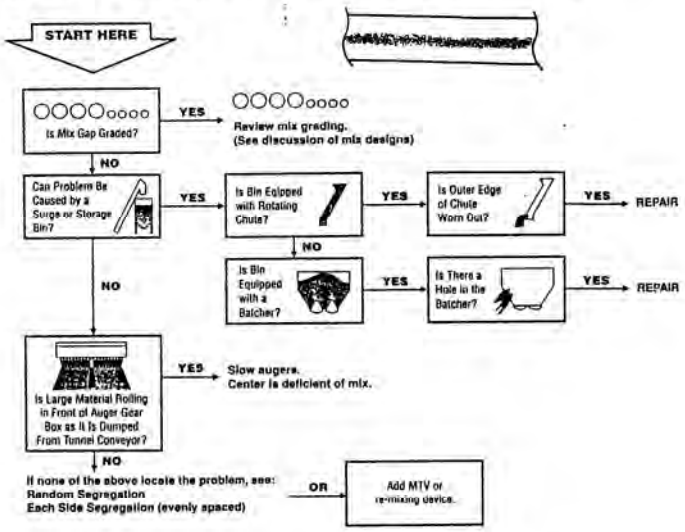

JOINT EDGE SEGREGATION

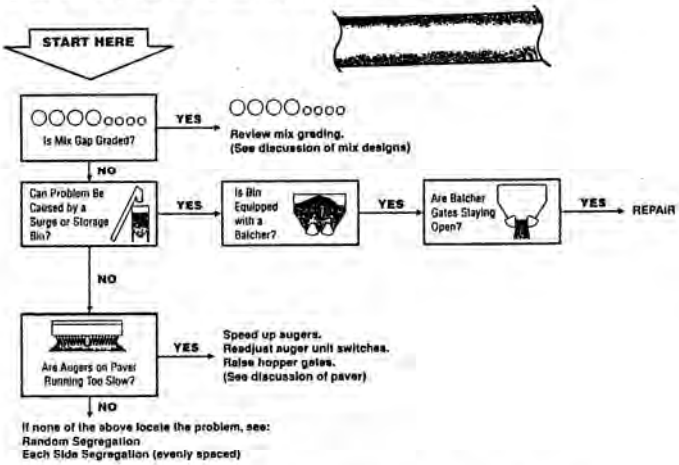

TRUCK END SEGREGATION/ ONE SIDE

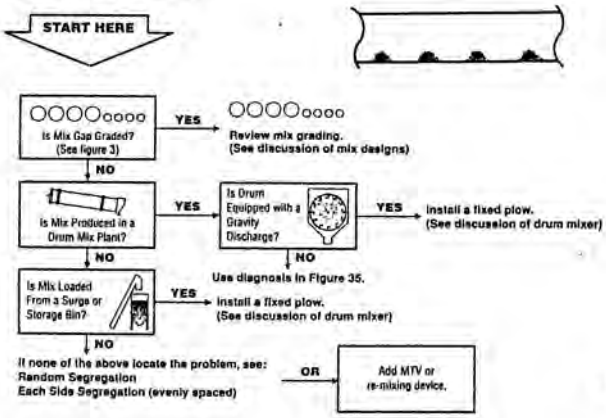

A-13