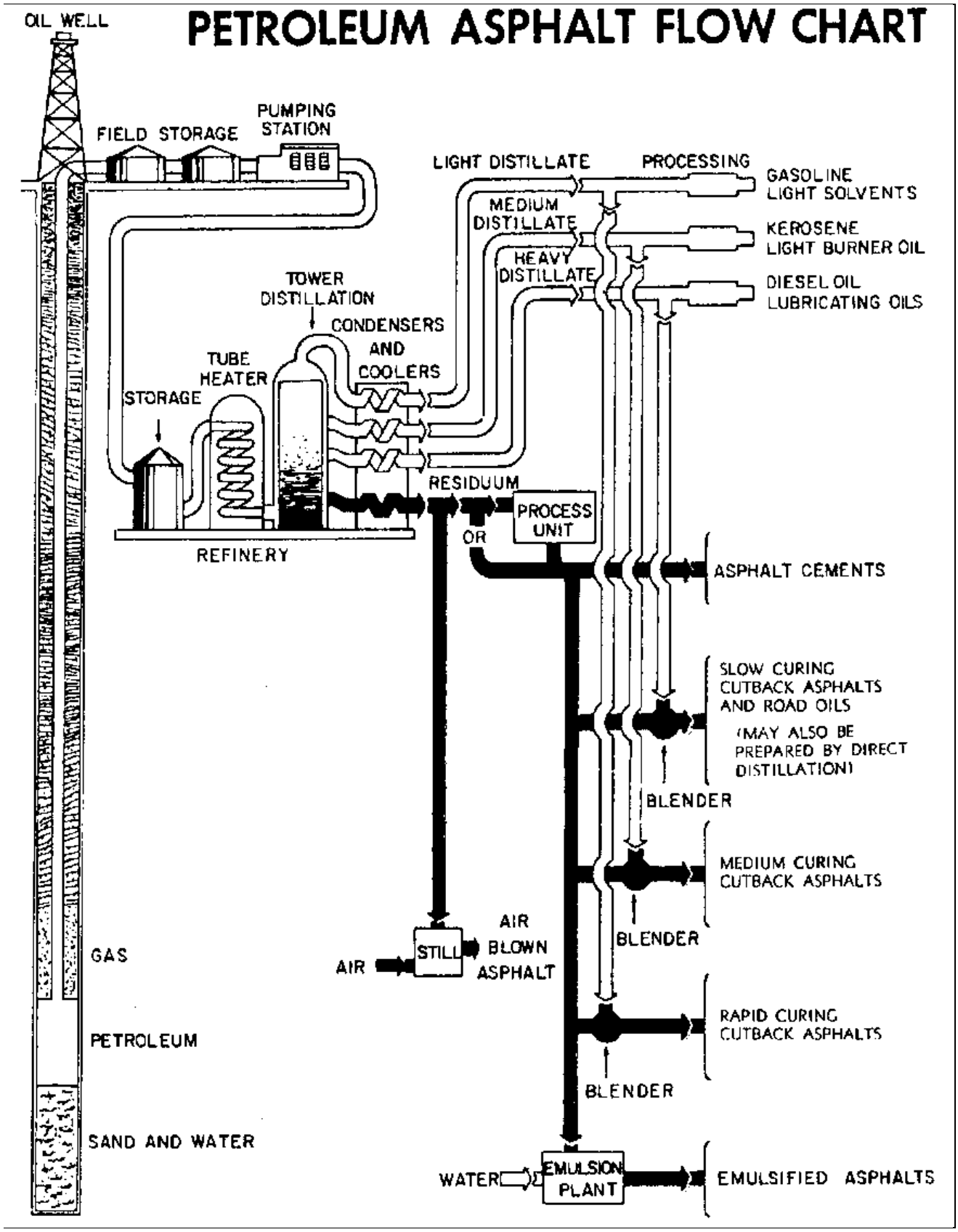PETROLEUM ASPHALT FLOW CHART