North Carolina
Department of Transportation

Nuclear Density Testing Manual – Base Course, FDR and Select Materials

Materials and Tests Unit
GeoMaterials Laboratory

Nuclear Density Testing Manual -

Base Course / Select Materials
and
Full Depth Reclamation

June 1, 2015

North Carolina Department of Transportation
Materials and Tests Unit – GeoMaterials Laboratory

This page left blank intentionally.

Table of Contents

Section 1 – Introduction……5

Section 2 – Determining Target Density - Base Course/Select Material..……7

Section 3 - Test Site Preparation……11

Section 4 – Test Section Procedures……..……13

Section 5 – Full Depth Reclamation (FDR)……...15

Section 6 – Random Test Location Procedures…….20

Section 7 – Ethics / Falsification……...22

Appendix A Field Operation Procedures – Troxler 3430 …….27

Appendix B Field Operation Procedures – Troxler 3440 …….36

Appendix C Field Operation Procedures – Troxler 3450 …….46

Appendix D Field Operation Procedures – Humboldt HS-5001EZ …….54

Appendix E Control Strip (M&T514N) and Test Section (M&T 515N) Forms……..….…….60

Appendix F Contact Information …….62

Appendix G Random Numbers…….64

References…….74

This page left blank intentionally.

Section 1 – Introduction

This manual is a reference for field technicians and covers procedures for performing nuclear density acceptance tests on the following Base Course Material, Select Material, and Recycled Materials:

- Aggregate Base Course (ABC)
- Cement-Treated Base Course (CTBC)
- Select Material – Class II, Type 1 (screenings)
- Select Material - Class III, Type 1
- Select Material – Class IV
- Full Depth Reclamation (FDR)

When using a nuclear gauge for density acceptance testing, Department employees must follow all rules and regulations stated in the Department's Radioactive Materials License. The rules and regulations are covered in the Nuclear Safety and Hazardous Materials Training Class and are provided in the *NCDOT Radiological Safety Manual for Portable Nuclear Density Gauges*. If unsure of any regulation or rule, please review the *NCDOT Radiological Safety Manual* or contact the Technical Trainer in your area. Contact information is provided on the Bill of Lading or in Appendix F of this manual. Any nuclear gauge used for density acceptance testing must have a valid calibration. All direct transmission gauges must be calibrated by an approved calibration service every two years. If a nuclear gauge has been calibrated by any provider other than Troxler, Humboldt, or InstroTech contact the GeoMaterials Laboratory for approval of the calibration service.

The Department utilizes personnel from engineering firms (CEI Personnel) to perform inspection services. Personnel employed by engineering firms (non-DOT employees) will <u>not</u> be permitted to operate, transport, or handle nuclear gauges owned by the Department. CEI Personnel using a nuclear gauge owned by his/her engineering firm will follow testing procedures provided in this manual; however, CEI Personnel will be responsible for following all rules and regulations stated by their employer's Radioactive Materials License. Engineering firms using nuclear density gauges in North Carolina must have reciprocity or be licensed by the North Carolina Department of Health and Human Services – Radiation Protection Section. Information regarding license requirements can be found at http://www.ncradiation.net/ or by calling (919) 571-4141.

Due to the importance of nuclear density acceptance testing, personnel performing acceptance tests must have a current certification and should review applicable sections of the following:

- *NCDOT - Radiological Safety Manual for Portable Nuclear Density Gauges* (NCDOT Personnel only)
- Consultant personnel should review their companies' radiological safety procedures
- *NCDOT Standard Specifications for Roads and Structures (Standard Specifications)*
- *Nuclear Density Testing Manual for Base Course Materials and Full Depth Reclamation*
- Plans
- Project Special Provisions
- *NCDOT Construction Manual*

Certification Process

A technician must have a current Base Course Material Nuclear Density Certification to perform nuclear density acceptance testing on base course, select, and FDR material. The following steps should be followed to obtain a certification:

- Attend and pass Nuclear Safety & Hazardous Materials Training Class
- Attend and pass a Base Course Material Nuclear Testing Class
    - Technician will be entered into the HiCAMs database with a certification in the "Pending" status
- Contact the GeoMaterials Laboratory to request a Field Certification for Base Course Material Nuclear Density Testing
    - Technical Trainer will visit to observe nuclear density testing procedures and perform additional training to ensure technician is competent
    - Department personnel will also receive additional field training/observation regarding nuclear safety rules and regulations specific to the Department's Radioactive Materials License
    - Once the Field Certification is successfully completed, the technician's status will be changed to "Active"

The certification is valid for five (5) years. Technicians are subject to loss of certification by revocation. The primary reason for the loss of a certification by this means would be falsifying test results, records or reports. Other reasons that might lead to loss of certification include gross neglect or apparent incompetence on the part of the technician.

Any technician with an active certification and, is actively testing, must be assessed once per year. The initial Field Certification performed by a Technical Trainer will count as an assessment for that year. For each subsequent year following the Field Certification, contact the Materials Technician or Section Materials Specialist in your area to schedule an annual assessment (contact information is provided in Appendix F of this manual). Failure to complete an assessment annually will result in suspension of the certification.

Section 2 – Determining Target Density - Base Course/Select Materials

Prior to performing density acceptance tests on base course material or select material, (ABC, CTBC, Class IV, etc.) a "Target Density" must be established. A target density is the maximum unit weight (expressed as lbs/ft^3 or kg/m^3) determined by performing a standardized compaction test on a sample of material. Density acceptance of an area is based on nuclear density measurements meeting a minimum specified percent requirement of the target density. A target density is dependent on the properties of a material and a change in the properties (i.e. gradation, chemical components, etc.) can affect the target density. Therefore, personnel performing density acceptance testing with a nuclear gauge must pay close attention to the material being tested to ensure an accurate target density is being used. If uncertainty arises regarding the target density, contact the Technical Trainer in your area for assistance (contact information is provided in Appendix F).

AASHTO T 180 Unit Weight Method (ABC or Class IV only)

The GeoMaterials Laboratory performs an AASHTO T 180 "unit weight" on material from each quarry supplying base course material to the Department. The unit weight is performed annually (or more if the source changes significantly) and the data is listed on the Materials and Tests' website. The unit weight information can be found at the following:

https://connect.ncdot.gov/resources/Materials/Pages/SoilsLaboratory.aspx

Once on the webpage select: "Aggregate Base Course (ABC) Unit Weight" and use the filter function to select the desired quarry. The information provided includes: Quarry Name/Owner, Unit Weight (in English and metric), Optimum Moisture, and Date (when AASHTO T 180 was performed). The optimum moisture content can be provided to the Contractor to aid in compaction operations. For this method of density acceptance, the unit weight established by the GeoMaterials Laboratory is entered into the nuclear gauge as the target density. Steps for entering a target density in a nuclear gauge can be found in the appropriate appendix depending on the model of gauge being used. If the "Date" is nearing 12 months since the AASHTO T 180 was performed, field personnel should monitor the website for the updated unit weight. Once updated on the website, field personnel should update the nuclear gauge target density with the new unit weight.

AASHTO T 99 Unit Weight Method (Class II, Type 1 or Class III, Type 1 Material)

When density acceptance tests are required for Select Material Class II, Type 1 (screenings) or Class III, type 1, either a nuclear gauge or conventional density test 1, 1A, or 2 can be used. If using a nuclear gauge an AASHTO T 99 Moisture Density Curve must be performed on the material to determine the target density. The Moisture Density Curve can be performed in the field or, if requested, a sample can be submitted to the Central GeoMaterials Laboratory for performing an AASHTO T 99 Moisture Density Curve.

In some cases chemical components of a material may influence nuclear density measurements. If this occurs it may be necessary to enter a moisture offset into the nuclear gauge and/or utilize the Control Strip Method for establishing a target density. If encountering issues while testing with a nuclear gauge, contact the Technical Trainer in your area for assistance.

Control Strip Method (ABC, Class IV, CTBC, etc.)

A "Control Strip" is defined as a small section of base material (usually 300 feet in length) that has been placed, shaped, and compacted meeting all specified requirements. This small area will be used to establish a target density to be entered into the nuclear gauge. The control strip procedure must be used when performing density acceptance testing on Cement-Treated Base Course (CTBC).

Location and Frequency

The Contractor is responsible for determining roller patterns and establishing acceptable control strips. The Engineer shall specify the location and frequency of the control strips. The subgrade on which the control strip is constructed should be representative of the majority of the material on which test sections will be constructed. If significant subgrade variation occurs on the same project/contract, the Engineer may require additional control strip(s) to establish a representative target density. When using the control strip method, at least one control strip shall be constructed for each layer prior to test sections being constructed. Additional control strips shall be constructed when a change is made in the source of material, when a significant change occurs in material composition from the same source, or when deemed necessary by the Engineer.

Numbering (control strips)

Control strips shall be numbered consecutively, beginning with number "1" for each project/contract. If control strips are placed for different types of material (i.e. ABC, CTBC, etc.) each material type will have a separate series of consecutive numbers.

Preparation of Control Strip

The Contractor shall place base course material on a section of the roadway 300 feet (90 meters) in length. If unusual project conditions exist, the Engineer may approve adjustment of the required length to help ensure the control strip is representative. The width of a roadway control strip shall be at least half the width of the base course shown on the typical section. The material shall be at the proper loose depth prior to beginning the compaction operation. The Engineer may determine that the roadway control strip is representative of the shoulders and utilize the roadway control strip to perform density acceptance testing on the shoulders. "Shoulder" control strips, if constructed, should be built to the full width and depth shown on the plans.

The base course layer must be compacted uniformly from bottom to top in the control strip and all test sections. The Contractor is permitted to use a sheep-foot roller however; the sheep-foot

roller is allowed to make a maximum of two cycles (or 4 machine passes) over an area. When compacting base course material with a sheep-foot roller, roller speed, frequency, and amplitude should set to apply the maximum compactive energy with each pass.

Moisture content is critical for obtaining a uniform density throughout the layer. The base course should be maintained as near optimum moisture as possible during the rolling operation. If water must be added to the base course after it is placed, the material shall be scarified, water added, and blended through the entire depth of base course material.

The density obtained on the control strip determines the density required for that layer of base course throughout the job; therefore, the equipment used in the compaction of the control strip must be operating properly and capable of compacting the material. At least one of the rollers shall be a steel-wheel vibratory roller weighing not less than six tons. The Engineer should inspect and approve the equipment prior to use. This approval does not prevent the Engineer from subsequently rejecting this equipment if, in the Engineer's opinion, uniform density is not being obtained throughout the depth of the layer being tested.

In order to ensure complete and uniform coverage, the compaction operation shall consist of individual roller passes made over the entire control strip surface. Each pass should be completed before beginning the next. The nuclear gauge operator should observe the rolling operation to ensure the control strip is rolled uniformly. The nuclear gauge operator, if requested by the Contractor, may take nuclear density measurements with the nuclear gauge set in the backscatter measurement position. These density readings are for informational purposes only and can be used to monitor the compaction operation (readings are not used for determining a target density or density acceptance). The Contractor may use the results to make adjustments in the compaction operation.

Target Density Determination

Once the Contractor advises that the compaction operation on the control strip is complete, a conventional density test #3 (ring test) shall be performed in a randomly located test site within the control strip. The individual performing the ring test must have a valid Conventional Density Certification and have been field certified by a Technical Trainer in running a Test #3 (ring test). Unless specified otherwise a control strip for ABC will be considered acceptable if the ring test indicates a density at least **100.0 %** of AASHTO T 180 as modified by the Department. Unless specified otherwise a control strip for Select Material – Class IV will be considered acceptable if the ring test indicates a density at least **92.0 %** of AASHTO T 180 as modified by the Department. Unless specified otherwise a control strip for Select Material –Class IV, when used in place of Chemical Stabilized subgrade, will be considered acceptable if the ring test indicates a density at least **97.0 %** of AASHTO T 180 as modified by the Department. Unless otherwise specified a control strip for CTBC will be considered acceptable if the ring test indicates a

density at least **97.0 %** of AASHTO T 180 as modified by the Department. If the ring test passes, the control strip will be accepted and the results should be recorded on top of M&T Form 514N. If the ring test fails, the Contractor shall perform additional compactive effort. When compacting CTBC, the Contractor shall adhere to specified time constraints. If the contractor performs corrective action, another ring test will be performed in the control strip. If the test passes the control strip will be considered acceptable.

Once a conventional ring test indicates the control strip is considered acceptable, it should be divided into 10 equal segments. A nuclear gauge density measurement must be taken from a randomly located test site within each of the 10 equal segments. Procedures for determining random test site locations are provided in Section 6 – Determining Random Test Site Locations (page 20) of this manual. Due to segregation along the edges of base course material, do not take density readings closer than two feet from the edge of spread. If the random number determines the test site location is less than two feet from the edge of spread move the site over two feet from the edge.

When performing nuclear gauge density measurements in a control strip, follow procedures stated in Section 3 – Test Site Preparation (page 11) of this manual. The nuclear gauge must have a current calibration and density readings shall be taken with the nuclear gauge source rod set in a direct transmission measurement position. Density results should be recorded on the appropriate form (see examples in Appendix E – Control Strip (M&T 514N) and Test Section (M&T 515N) Forms).

When taking nuclear density measurements in a control strip record dry density, percent moisture, and percent of AASHTO T 180 unit weight (unit weight from GeoMaterials Laboratory should be entered into gauge as a target density when obtaining density measurements in a control strip) on M&T Form 514N. The 10 nuclear gauge dry density measurement results taken in the control strip will be averaged to determine a target density for acceptance.

Section 3 - Test Site Preparation

Surface conditions for nuclear density measurements are critical to gauge performance and test results. The scraper plate can be used to prepare surfaces that are not smooth. Do not perform density acceptance measurements (for a control strip or a test section) if the test location has freestanding water on the surface. The optimum time to perform density acceptance testing is after the freestanding surface water has dried off but before the surface has completely dried out. An overly dry base course surface will generally begin to ravel and segregate which causes an uneven surface. Un-even test surfaces can prevent a nuclear gauge from being properly seated and will most likely result in a lower density reading (due to large amount of surface voids).

Base course, FDR, or soil type materials are tested for acceptance using the direct transmission method. The test depth should be the maximum which prevents the source rod from measuring the underlying material. For example, if ABC has been "cut" to final grade and the specified depth is 8 inches compacted, the area should be tested with the nuclear gauge measuring at a 6 inch direct transmission. This testing depth is used to prevent the gauge from measuring the subgrade material since a plus or minus ½ inch tolerance is usually specified for final grade. When testing FDR, test the full depth specified for treatment.

The steps to perform a nuclear density test are as follows:

1. Setup nuclear gauge test parameters (i.e. Standard Count, Count Time, Units, Target Density, etc.)
2. Locate test site using random numbers.
3. Place scraper plate on the surface to be tested.
4. Move scraper plate back and forth and tap area with plate to smooth the surface.
5. Place drill rod through extraction tool.
6. Slide tip of drill rod into drill rod guide sleeve on the scraper plate.
7. Put on safety glasses to protect eyes.
8. Step on scraper plate with one foot to hold it in place.
9. Using a sledge hammer drive the drill rod at least 2 inches beyond the desired test depth (drill rod has two inch depth indication markings scribed on the rod). If testing an area that has a geotextile under the material being tested care should be taken to avoid punching holes in the fabric.
10. Step on the plate.
11. Grab the handles of the extract tool and pull it up to the head of the drill rod.
12. Remove the drill rod by twisting and pulling the rod straight up (do not tap the drill rod from side to side; this will distort the test hole).
13. Place drill rod and extraction tool to the side.
14. Mark (by scribing lines in the test surface) for the center of scraper plate and center of the drill rod (as shown in Figure 1).

15. Carefully remove the scraper plate.
16. Carefully place nuclear gauge on test site centering the source rod with each line scribed into the surface of the test area (aids in aligning source rod with test hole).
17. Pull the trigger mechanism and push the source rod down to the desire test depth.
18. Release the trigger at the desired depth and listen for the “click” indicating the rod is in the proper position.
19. Press the top of the handle to confirm the rod is locked in the measurement position.
20. Pull the gauge to the back of the test hole and seat gauge on the test site (ensure gauge does not rock).
21. Inspect to verify gauge is properly seated.
22. Press START to take a one minute measurement.
23. Step back from gauge 3 to 4 feet while the measurement is taking place.
24. Once the results are displayed, pull source rod into the SAFE position and record results.

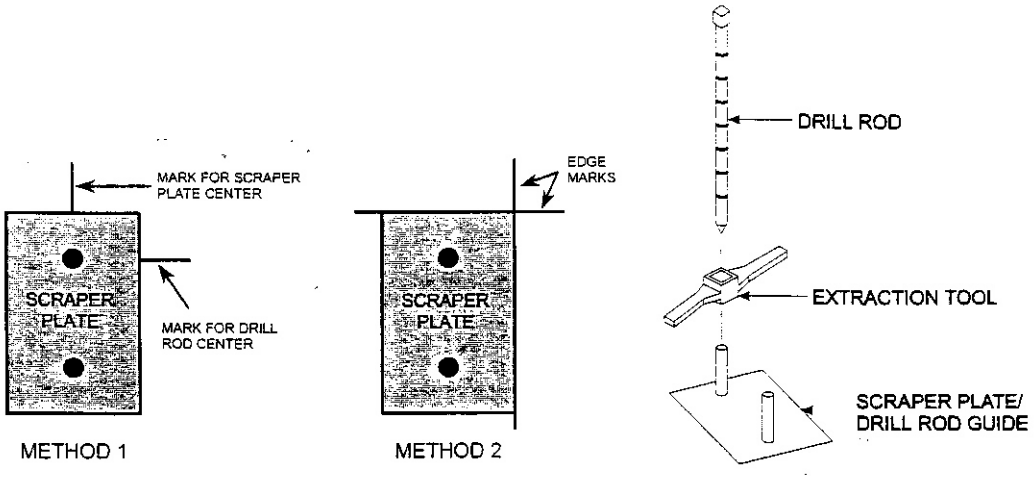

Figure 1 Scraper Plate, Drill Rod, and Extraction Tool (Troxler Nuclear Gauge Operation Manual)

Section 4 – Test Section Procedures

Length of a test section will be determined by the width of the section being tested. Criteria for test section length requirements are provided in Table 1.

Length of Test Sections for Base Course, Select, and FDR Materials	
Width (feet)	Test Section Length (feet)
Less than 10	2,000
10 – 16	1,500
>16 - 36	1,000
Great than 36	Maximum of 4,000 square yards per test section
Width (meters)	Test Section Length (meters)
Less than 3	600
3 – 5	450
>5 – 11	300
Greater than 11	Maximum of 3,300 square meters per test section
FDR Materials	
One test section per operation (tanker load)	

Table 1 Criteria for Test Section Lengths

A test section shall consist of five nuclear gauge readings. Test sections are divided into five equal segments and one test site must be randomly located within each segment. Procedures for determining random test sites are provided in Section 6 – Determining Random Test Site Locations (page 20) of this manual. Due to segregation along the edges of base course material, do not take density readings closer than two feet from the edge of spread. If the random number determines the test site location is less than two feet from the edge of spread move the site over to two feet from edge.

A one minute density measurement will be taken at each of the 5 randomly located test sites. Follow the test site preparation procedures provided in Section 3 (page 11) of this manual. Once the nuclear gauge completes a one minute count and displays the results, pull the source rod into the safe (shielded) position, and record percent moisture and percent compaction on the M&T Form 515N.

Minimum nuclear density requirements for each material are provided in Table 2 Minimum Density Requirements and should be used unless otherwise specified.

Material	Minimum Percent Compaction (individual reading)	Minimum Percent Compaction (average of 5 readings)
ABC	95.0 %	98.0 %
CTBC	95.0 %	98.0 %
FDR	94.0 %	97.0 %
Select Material - Class IV	89.0 %	92.0 %
Select Material – Class IV (in place of Chemical Stabilization)	92.0 %	95.0 %
Select Material - Class II, Type 1 (used in embankment)	92.0 %	95.0 %
Select Material - Class III, Type 1 (used in embankment)	92.0 %	95.0 %
Select Material - Class II, Type 1 (used in subgrade)	95.0 %	98.0 %
Select Material - Class III, Type 1 (used in subgrade)	95.0 %	98.0 %

Table 2 Minimum Density Requirements

If nuclear density measurements indicate a test section fails to meet the minimum specified requirements, for either an individual reading or the average of the 5 readings, the Contractor may perform corrective action to bring the area into compliance. If no corrective action is performed the Engineer may apply Section 105-3 of the *Standard Specifications*. When correcting chemically stabilized areas the Contractor must follow specified time restrictions. Once the corrective action is completed a new series of (5) random test sites will be determined and the test section will be re-tested.

Numbering Test Sections

Base course, Select, and FDR material test sections will begin with the number “1” and run consecutively throughout the project. If ABC and CTBC are used on the same project, each type material will have a separate series of test section numbers. When re-testing a failed section it will have the same number as the original with an alphabetical designation following the number (example – if test section 2 fails, the re-test would be numbered “2A”).

Section 5 – Full Depth Reclamation

Introduction

Full Depth Reclamation (FDR) is defined as *a recycling method where all of the asphalt pavement section and a predetermined amount of underlying materials are treated to produce a stabilized base course* (A.R.R.A. Basic Asphalt Recycling Manual FHWA). A diagram demonstrating the process is provided in Figure 2. Several types of additives can be used in FDR to stabilize or increase strength of a given area including asphalt emulsions, Portland cement, fly ash, and lime. Each additive will react differently depending on the existing pavement structure and type of underlying material that will be recycled. Therefore, a project evaluation should be completed to identify if a given roadway is a candidate for FDR. The Geopavement Section of the Geotechnical Engineering Unit should be contacted to conduct a project evaluation. A Geopavement Engineer will perform the necessary sampling and analysis to determine if FDR is the best method of improvement and the most appropriate stabilizing additive to use. Contact information for the Geopavement Section is provided in Appendix F of this manual.

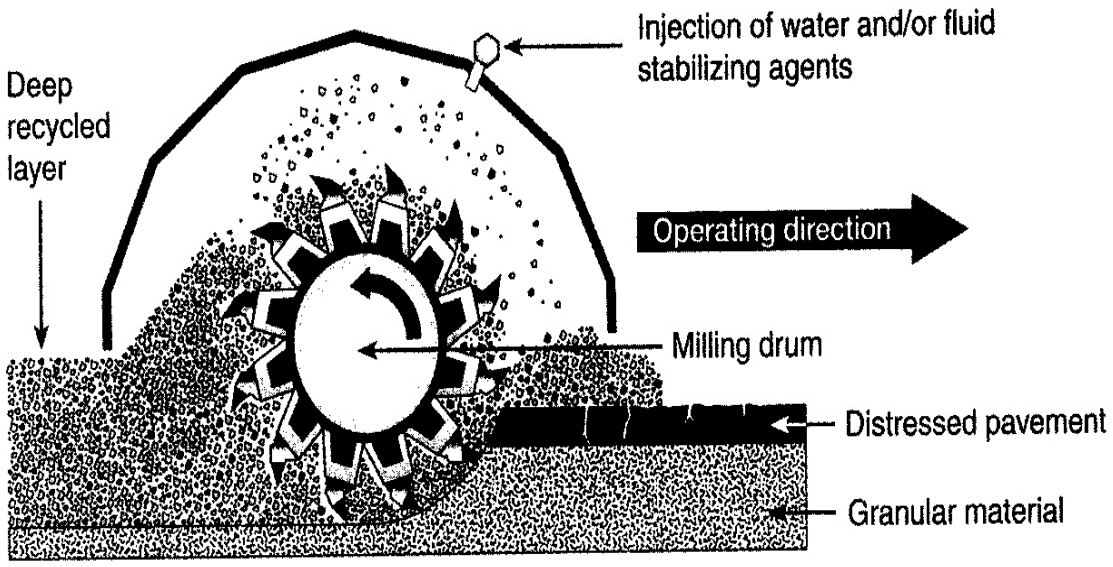

Figure 2 Diagram of Cutting Drum performing FDR (A.R.R.A Basic Asphalt Recycling Manual FHWA)

Due to the speed of a FDR operation and the fact that many unknown variables may be encountered on a project, oversight of a FDR project is difficult and demanding. Project personnel should review and familiarize with all specifications related to the FDR project prior to construction operations beginning. Project personnel inspecting a FDR operation must also have the necessary certification(s). Certifications needed for FDR inspection include:

- Chemically Stabilized Subgrade/Base Essentials
- Conventional Density
- Nuclear Safety and Hazardous Materials
- Base Course Material Nuclear Testing

A Technical Trainer should be contacted two to three weeks prior to a FDR operation beginning so the trainer can schedule to be onsite. The Technical Trainer can offer technical guidance to ensure project personnel are following all proper testing and sampling procedures. Having a Technical Trainer present when a FDR operation begins is strongly recommended for project personnel that have no or very limited experience inspecting FDR operations. When a FDR project begins, project personnel administering the contract must take the necessary steps to ensure the finished product will perform as intended. This includes verifying contract requirements are being met (i.e. plans, Project Special Provisions, minimum density requirements, mixing depth, materials, etc.). In most cases FDR will be performed using cement as the stabilizing agent therefore, *Section 541 Flexible Pavement Reclamation using Portland Cement* of the *Specifications* will apply.

Density Acceptance Methods – FDR

Density acceptance for FDR projects may be determined using conventional density Test #2 or by using a nuclear density gauge. Procedures for performing a Density Test # 2 are provided in the latest edition of the *Conventional Density Operator's Manual*. When using a nuclear density gauge follow the steps provided in this manual and any guidance provided by the Technical Trainer.

Determining a Target Density – FDR Nuclear Density Testing

Establishing a valid target density is important in ensuring the final product will perform as intended. Since the underlying pavement structure may change multiple times on a given project, maintaining a valid target density can be challenging. Therefore, project personnel should closely monitor the initial pre-mixing of the roadway. Note any changes in the consistency of the mixed layer (i.e. color, moisture content, etc.) Changes in the mixed layer indicate a possible change in the material which will often affect the target density. As a minimum, perform 1 one-point Proctor (based on AASHTO T 99 Method D) at the beginning of each day's operation and perform additional one-point Proctors from any area which indicates a possible significant change in the target density. The dry density determined from the one-point Proctor will be entered into the nuclear density gauge as the target density.

Determining a Target Density - One-point Proctor Procedures (AASHTO T 99 Method D)
The procedures for performing a one-point Proctor are similar to performing the AASHTO (bottom) part of Density Test #2.

Equipment Needed:

Large scoop	Compaction mold (3/40 cubic foot)
Small pick	50 pound floor weight
Scales	Steel straight edge
Pie plate	Gas burner (LP tank w/ propane)
Large spoon	Frying pan
Bucket	Soil pan
Small spatula	Compaction rammer (5.5 pounds, 12-inch drop)
Water	Water container (i.e. small squirt bottle)
Density Forms (504 and 515N)	

This method will establish a unit weight or target density to be entered into the nuclear gauge. After the stabilizing agent has been added and mixed, obtain a representative sample to perform a one-point Proctor using the following steps.

1. Setup and level scales.
2. Verify scales using 2,000 gram weight (tolerance +/- 1 gram).
3. Weigh and record empty mold weight.
4. Use large scoop to obtain one scoop full of mixed material from three different locations across the width of the mixed roadway.
5. Place sample from each location into bucket.
6. Place all material into soil pan.
7. Repeat sampling until the sample of material is large enough to compact in a 3/40 cubic foot mold (soil pan about 2/3 full of material).
8. Mix sample in pan and adjust moisture content until sample is uniformly at optimum moisture.
9. Place first layer of in the 3/40 ft^3 mold.
10. Apply compactive effort (56 blows per layer).
11. Place second layer in mold and apply compactive effort.
12. Place third layer in mold and apply compactive effort.
13. Scribe around top layer in the mold.
14. Carefully remove mold collar.
15. Verify scrape off of third layer is ¼ to ½ inches above top of mold.
16. Scrape off excess soil with the straight edge until the surface is flush with the top of the mold.
17. Fill in voids with fine material and re-smooth the surface.
18. Weigh the mold with soil and record.

19. Extract soil pill from mold.
20. Using the steel straight edge, split the soil pill down the middle lengthwise.
21. Obtain a representative 1,000 gram moisture sample by scraping one pill half from top to bottom.
22. Carefully dry the moisture sample (do not overheat the sample).
23. Once the sample is dry, weigh and record.
24. Using the formulas provided on the M&T 504 Form, calculate the dry density (i.e. target density).
25. Once the target density is determined, enter it into the nuclear gauge.

Repeat this process at a minimum of once per day, anytime the material being tested changes significantly, or if two consecutive nuclear test section averages exceed the "Test Section Band" limits of 106.0 % or 95.0 % of the target density.

Moisture Offset Determination Procedures

In some cases the chemical components of a mixed FDR layer (or any type base course, select, or soil material) may influence the moisture content measurement system of a nuclear gauge. Nuclear gauges determine moisture content by measuring the amount of hydrogen in the layer being tested. Though water contains hydrogen many other elements also contain hydrogen (i.e. liquid asphalt, cement, mica, etc.) As a result, a nuclear gauge will measure the hydrogen within the other elements as water and display higher in-place moisture content than is actually present. Higher moisture content will reduce the dry density as measured by the nuclear gauge. In order to compensate for elements containing hydrogen a "Moisture Offset" can be entered in the nuclear gauge.

Determine moisture offset by following the steps provided below:

1. Setup nuclear gauge test parameters (i.e. Standard Count, count time, target density, etc.)
2. Ensure the nuclear gauge does not have a moisture correction or offset enabled.
3. Setup and level scales.
4. Verify scales using 2,000 gram weight (tolerance +/- 1 gram).
5. After a small area has been compacted, select a site to perform a density measurement with the nuclear gauge.
6. Prepare test site following procedures described in Section 3 – Test Site Preparation (page 11) of this manual.
7. Determine gauge measured moisture content ($\%Moist_{(gauge)}$).
8. Test layer with the source rod set in the 6-inch Direct Transmission position.
9. Record moisture content, dry density, wet density from the measurement.
10. Remove nuclear gauge from test site.
11. Determine in-place moisture ($\%Moist_{(in\text{-}place)}$) by obtaining a representative 1,000 gram. moisture sample from the same test site (middle of nuclear gauge "footprint") .
12. Re-mix sample and immediately weigh a 1,000 gram moisture sample.

13. Carefully dry in-place moisture sample using a hot plate.
14. Once sample is dry, weigh and record.
15. Compare nuclear gauge measured percent moisture to the in-place percent moisture.
16. If the values are within +/- 1.5 %, no moisture offset is needed.
17. If a difference exists calculate the K-factor value by following the formula:

$$K = \frac{\%Moist_{(in\text{-}place)} - \%Moist_{(gauge)}}{100 + \%Moist_{(gauge)}} \times 1{,}000$$

18. Follow the steps provided in the appropriate appendices in this manual to enter the K-factor (K-factor value may be negative or positive).
19. Once the moisture offset is entered and enabled, take a second density measurement in the same vicinity (within 2 feet) of the original density measurement.
20. Verify moisture content is within +/- 1.5 % of the in-place moisture ($\%Moist_{(in\text{-}place)}$) used to calculate the K-factor.
21. If not, verify calculations and K-factor entered into gauge is correct.
22. Correct errors or;
23. If no errors can be determined;
24. Take a second measurement at the site.
25. If the tolerance is not met on the second attempt contact the Technical Trainer in your area for assistance.
26. Due to variable conditions often encountered on FDR projects, verify moisture content between the nuclear gauge and in-place sample is within tolerance (+/- 1.5 %) for each day's production.
27. Due to questionable gauge moisture readings it may be necessary to perform density test #2 for acceptance testing until the issue can be resolved.

Test Site Preparation – FDR

Once all test parameters are established normal testing can proceed. Follow procedures described in the Section 3 – Test Site Preparation (page 11) of this manual.

Test Section Procedures - FDR

Follow procedures described in Section 4 – Test Section Procedures (page 13) of this manual when completing a test section. If an area fails to meet minimum density requirement, the Contractor may elect to reconstruct the area. When using cement as the stabilizing agent, the Contractor may add additional cement at a rate of 50 % of the original specified rate. All materials and work necessary to reconstruct an area will be performed at no cost to the Department. The Engineer also has the authority to request that a given area be proof-rolled by a loaded dump truck and accept using section 105-3 of the *Specifications*. If two consecutive test section averages are outside "Test Section Bands" of 106.0 % or 95.0 %, perform one-point Proctor to establish a new target density and re-verify the gauge derived moisture and in-place moisture are within tolerance. Re-establish moisture offset if tolerance is exceeded.

Section 6 – Determining Random Test Site Locations

In order to prevent biased testing random numbers are used to calculate test sites for control strips and test sections. For testing base course, select, or FDR material use the table of random numbers provided in Appendix G - Random Numbers to calculate test locations. Determination of test sites is completed in two dimensions by locating a station (length) and a pull (or offset) distance from the edge of base course (width). Refer to the following steps for an example of calculating test sites in a test section.

1. Determine the test section length by referring to Table 1 – Criteria for Test Section Lengths (page 13). For this example the width of base course material is 24 feet; therefore, the test section is 1,000 linear feet. The area to be tested begins at station 10+00 and ends at station 20+00.
2. Divide the test section into five equal segments and record the beginning station of each segment on a notepad. The data recorded would be as follows:

   1000 / 5 = 200 foot segments

   Beginning station – 10+00 ⇨
   12+00
   14+00 ⇨
   16+00 ⇨
   18+00 ⇨
   Ending station - 20+00 Note: Arrows point to random test site
3. Refer to random number tables in the back of this manual to determine random number multipliers. In this example the random numbers are:

   8121
   4185
   7423
   9153
   1617
4. Use the first two digits of each row to calculate a length distance and the last two numbers to calculate a width or offset distance.
5. To determine station (length), place a decimal in front of each random number and multiply by the segment length. In this example the calculations are as follows:

Length of Test Segment:	200	200	200	200	200
Random Number:	x 0.81	x 0.41	x 0.74	x 0.91	x 0.16
Length Distance:	162	82	148	182	32

6. Add the length distance (from step 5) to the beginning station of each segment determined in step 2. If stationing is decreasing subtract the length distance from the beginning station of each segment.

Beginning Station:	10+00	12+00	14+00	16+00	18+00
Length Distance:	+ 162	+ 82	+ 148	+ 182	+ 32
Random Test Site	11+62	12+82	15+48	17+82	18+32

7. Calculate pull (or offset) distance from the edge of spread by placing a decimal in front of the random number and multiplying the total width at the test site. Round to the nearest foot. For this example the calculations are as follows:

Width at test site	24	24	24	24	24
Random Number	x 0.21	x 0.85	x 0.23	x 0.53	x 0.17
Offset width (ft)	5	20	6	13	4

8. Based on the calculations nuclear density measurements would be taken at the following locations:

Beginning station –	10+00	⇨ 11+62	5’
	12+00	⇨ 12+82	20’
	14+00	⇨ 15+48	6’
	16+00	⇨ 17+82	13’
	18+00	⇨ 18+32	4’
Ending station -	20+00		

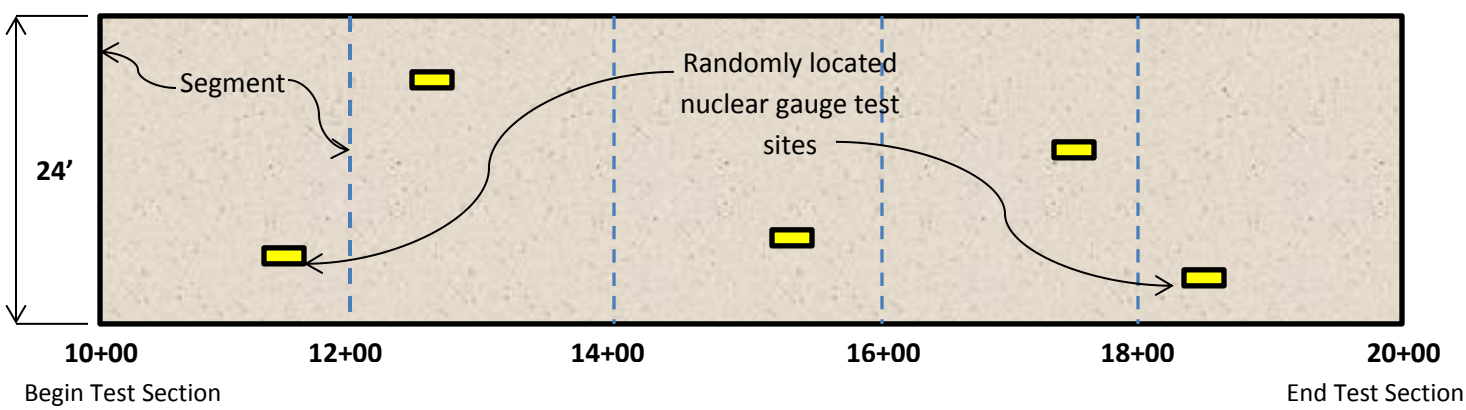

Figure 3 Plan view of test section (not drawn to scale)

Section 7 – Ethics / Falsification

Ethics has the following definitions when referenced in a dictionary:

1. A principle of right or good behavior
2. A system of moral principles or values
3. The study of general nature of morals and the specific moral choices an individual makes in relating to others
4. The rules or standards of conduct governing the members of a profession

In order to the maintain trust of the general public, the Department has implemented an Ethics Policy and the latest version is as follows:

North Carolina Department of Transportation

~~~
~~~

This policy applies to all employees of the NCDOT and shall be brought to the attention of each employee during orientation and through annual training by Human Resources. Failure to comply with this policy will be grounds for disciplinary action up to and including dismissal.

Definitions

1. Conflict of interest -
   A conflict of interest arises when an employee's private interest, usually of a personal, financial or economic nature, conflicts or creates the appearance of a conflict with the employee's public duties and responsibilities.
2. Gift -
   A gift is anything of value given without compensation.
3. Favor -
   A favor is any opportunity, service, accommodation, use of facility, or other benefit made available for less than fair market or normal value given in exchange for being influenced in the discharge of one's duties and responsibilities.
4. Employee -
   Employee for the purposes of this policy shall mean both State officer and employee holding an office or employment with the North Carolina Department of Transportation.
5. Family -
   Family for the purposes of this policy includes spouse, you and your spouse's children, parents, in-laws, step-parents, step-child, step-sibling, grandchildren, brother, sister, uncle, aunt, first cousin, also any dependent person living in the same household.

I. Conflict of Interest

No employee shall have any interest, financial or otherwise, direct or indirect, or engage in any business, transaction or activity that is in conflict or could appear to be in conflict with the proper discharge of his or her duties. An appearance of a conflict of interest exists when a reasonable person would conclude from the circumstances that the employee's ability to protect the public interest, or perform public duties, is compromised by personal interest. Examples of conflict of interest are as follows:

A. Misuse of Official Position

No employee shall use or attempt to use his or her position with the NCDOT to secure unwarranted privileges or advantages for himself, herself or others.

B. Contracts and Purchasing Order Agreements

No employee authorized to draft, negotiate, administer, accept or approve any contract, subcontract or purchase order agreement on behalf of the State, or any member of his/her family, shall have, directly or indirectly, any financial interest in such contract, subcontract or purchase order agreement. In an effort to avoid the appearance of impropriety while conducting the public's business, employees will be restricted from accepting any employment or engaging in any relationship following their employment with NCDOT with any business entity in connection with any contract, subcontract or purchase order agreement that they participated in any of the following activities:

1. Drafting the contract, subcontract or purchasing order agreement;
2. Defining the scope of the contract, subcontract or purchasing order agreement;

3. Selection of the business entity for services;
4. Negotiation of the cost of the contract, subcontract or purchasing order agreement, including calculation of man-hours, fees or extent of services;
5. Administration of the contract or purchase order agreement.

This section is not intended to prohibit employment with a business entity if the employment is on work other than the specific contract, subcontract or purchase order agreement with which they were involved. An exception to this section of the policy may be granted when recommended by the Secretary of Transportation and approved by the Board of Transportation.

C. Real/Personal Property
No employee or member of his/her family shall use an employee's position to profit from, directly or indirectly, an interest in real or personal property.

D. Business Opportunities
No employee or member of his/her immediate family shall accept any business or professional opportunity when such person knows, or reasonably should know, that the opportunity is being afforded to them with the intent to influence the performance of the employee's official duties.

E. Outside Employment and Activities
In accordance with NCDOT Secondary Employment policy, the employment responsibilities to the State are primary for any employee working full-time and other employment in which that person chooses to engage is secondary. An employee shall have the approval from the division, branch or unit manager before engaging in any secondary employment. No employee shall accept employment or render services for any private or public interest when that employment or service is in conflict with the discharge of his or her official duties or when that employment may tend to impair his or her objectivity or independence of judgment in the performance of such duties or induce them to disclose confidential or any information gained through their State duties.

F. Use of Information
No employee shall, directly or indirectly, use, disclose, or allow the use of official information which was obtained through or in connection with his or her official duties and which has not been made available to the general public for the purpose of furthering the private interest or personal profit of any business entity or person, including the employee.

II. Gifts and Favors
No employee shall knowingly, directly or indirectly, ask, accept, demand, exact, solicit, seek, assign, receive, or agree to receive anything of value for the employee or for another person, in return for being influenced in the discharge of the employee's duties and responsibilities.
No employee shall solicit for a charitable purpose a gift from a subordinate employee, except as provided in NC General Statute, Section 138A-32 (b). No employee shall solicit or accept, directly or indirectly, on behalf of himself or herself or family member, any gift or favor from a contractor, subcontractor, vendor, supplier, lobbyist or any other individual or other business entity that:

1. Has or is seeking to obtain contractual or other business or financial relations with the Department;
2. Conducts operations or activities that are regulated by the Department;
3. Have interests that may be substantially affected by the performance or non-performance of the employee's official duties.

Exceptions to this section, gifts and favors, are noted in NC General Statute, Section 138A-32 (e).

Any such gift or favor received from a contractor, subcontractor, supplier, lobbyist or any other individual or other business entity must be reported and remitted immediately through the appropriate chain of command to the Secretary of Transportation.

III. Consultation
Employees are urged to consult with the Division of Human Resources, Classification, Compensation & Policy Unit staff when an ethical question arises under this policy.

IV. Distribution and Training of Ethics Policy
A copy of this policy will be presented to all new employees at the time of employment and posted in a conspicuous place throughout the Department and made available on the NCDOT web site. Training shall be provided by Human Resources every other year.

V. Enforcement and Compliance
This policy will be enforced by the Secretary of Transportation. Failure to comply with the above policy will be grounds for disciplinary action up to and including dismissal from employment with the NCDOT. Conflicts of interest or unethical behavior that defrauds the Department, vendor, contractor, subcontractor, or supplier may also be violations of criminal law and may result in criminal prosecution.

VI. Disclosures
Any employee who identifies a conflict of interest shall disclose the same promptly in writing through appropriate management channels to the Secretary of Transportation.

Falsification

North Carolina State Law G.S. Chapter 136 Roads and Highways

13.2 Falsifying highway inspection reports

(a) Any person who knowingly falsifies any inspection report or test report required by the Department of Transportation in connection with the construction of highways shall be guilty of a Class H Felony.
(b) Any person who directs a subordinate under his direct or indirect supervision to falsify an inspection report or test report required by the Department of Transportation in connection with the construction of highways shall be guilty of a Class H Felony.

Punishment for a Class H Felony can result in up to 10 years in jail, up to $10,000.00 in fines or both.

Federal Law Title 18-Crimes and Criminal Procedure

Part I – Crimes

Chapter 47 – Fraud and False Statements

Section 1020. Highway Projects

Whoever, being an officer, agent, or employee of the United States, or of any State or Territory, or whoever, whether a person, association, firm, or corporation, knowingly makes any false statement, false representation, or false report as to the character, quality, quantity, or cost of the material used or to be used, or the quantity of the work performed or to be performed, or the costs thereof in connection with the submission of plans, maps, specifications, contracts, or costs of construction of any highway or related project submitted for approval to the Secretary of Transportation; or Whoever knowingly makes any false statement, false representation, false report, or false claim with respect to furnished or to be furnished, in connection with the construction of any highway or related project approved by the Secretary of Transportation; or

Whoever knowingly makes any false statement or false representation as to a material fact in any statement, certificate, or report submitted pursuant to the provisions of the Federal-Aid Road Act approved July 11, 1916 (39 Stat. 355), as amended and supplemented,

Shall by fined under this title $10,000.00 or imprisoned not more than five years, or both.

Falsification of Records is defined as the changing or misrepresentation of Data or Tests. Falsification also includes the destruction of alteration of records.

Appendix A - Field Operation Procedures for Troxler 3430

When a nuclear gauge is initially purchased or an operator is not familiar with the device, he/she should review the manufacturer's operation manual (supplied with the nuclear gauge). Knowledge gained from the manufacturer's manual will help to ensure the gauge is operated safely and efficiently. If an operator is still unsure of any procedures after reviewing the manufacturer's manual, this manual or the *NCDOT Radiological Safety Manual for Portable Nuclear Density Gauges*, he/she should contact a Technical Trainer for assistance.

Best Procedures for Battery Care

The nuclear gauge uses Ni-cad batteries as a power source. A fully charged battery pack will remain operational for approximately 4 – 6 weeks under normal conditions (depending on use). Ni-cad batteries develop a memory and following proper procedures is necessary to prevent damaging the batteries.

Procedures:

- Batteries should not be recharged unless the "Battery Low" indicator is visible on the LCD display.
- Only in an emergency situation, recharge gauge using the cigarette charger (DC) in vehicle. When charging in a vehicle, the following procedures apply:
    - Use correct charger (supplied by manufacturer).
    - Carefully plug charger into gauge first and then into cigarette charger.
    - DO NOT sit in vehicle with the gauge while the device is charging.
    - A 30-minute charge should be enough to complete the day's testing.
    - DO NOT turn vehicle on or off while charging a gauge (electrical surges occur when a vehicle is turned off or on; surges reduce battery life of the Ni-cad and can damage the gauge electronics.
    - Once a 30 minute charge is complete, unplug charger from cigarette charger first and then carefully unplug cable from gauge (jerking charger can break charging port).
    - Once gauge is returned to the storage facility charge device overnight to provide it a full charge (follow procedures for overnight (full) charge listed below).
- When providing an overnight (full) charge to a gauge, the following procedures apply:
    - Use correct charger (supplied by manufacturer).
    - If possible use a surge protector.
    - Carefully plug charger into gauge first and then plug into electrical supply.
    - Once device is plugged in it should cut on and display 14 hours remaining.
    - Allow gauge to charge overnight.
    - Keep in mind that some electrical outlets are controlled by a light switch; ensure the electrical outlet is not controlled, if it is do not turn off the light switch while charging the gauge.

- Once gauge is fully charged, unplug charger from the electrical outlet first then carefully unplug cable from device (jerking charger can break charging port).

If the nuclear gauge will not hold a charge properly contact the Technical Trainer for assistance.

Turning the gauge "ON"
When first turning gauge on, the LCD will fill with test characters prior to proceeding to the self-test phase. The gauge will shut itself off after five hours of no activity. During the character display test the screen will display:

```
Testing LCD

0123456789ABCDEFG
```

After approximately four seconds the display will change to:

```
-Troxler 3430 -

V  -  (Test:        )
```

The gauge will perform a 300-second self-test. After the self-test is completed the display will show the following:

```
<Ready>     min.

Depth:      inches
```

Nuclear Gauge Test Parameter Set-up

Setting Measurement Units
Prior to taking density readings the user should determine which unit of measurement the results are to appear on the screen. The nuclear gauge can display either metric or English units. To execute the *Set Units* function, press [SPECIAL] (on keypad). The display will be as follows:

```
-Recall-

(↓↑ or Enter)
```

Press the down arrow [↓] (one keypad) seven times for the following display:

-Set Units-

(↓ ↑ or Enter)

Press [ENTER] (on keypad) for:

Units: PCF

(↓ ↑ or Enter)

As shown in this example the gauge is set to display readings in pound per cubic foot (PCF). Press [ENTER] to return to the "Ready" display or if metric units are required press the down arrow [↓] for the display:

Units: g/cm^3

(↓ ↑ or Enter)

Press the down arrow [↓] to select kg/m^3. Press [ENTER] when the desired unit of measurement is displayed. Once [ENTER] is pressed the gauge will return to the "Ready" display.

Count Time Selection

The 3430 nuclear gauge provides three different count times (or count duration) that can be used when taking readings. The count durations include: 15-seconds, 1-minute, and 4-minutes. Longer count time provides greater accuracy of the density measurement. Currently, the Department requires all nuclear gauge density measurements be taken using a **1-minute count time**. To select a count time, press [TIME] (on keypad) and the display will be as follows:

Time min.

(↓ ↑ or Enter)

Press the up [↑] or down [↓] arrow keys to scroll through the count time selections. Press [ENTER] to select the desired count time. Once [ENTER] is pressed the gauge will return to "Ready" display.

Test Mode Selection (Marshall/Proctor)

Though the 3430 nuclear gauge has an asphalt test mode (Marshall), the current *QMS Program* requirements only allow nuclear gauges with thin-lift and printer capabilities to be used on asphalt; therefore, the 3430 device cannot be used for density acceptance testing on asphalt. Refer to the latest edition of the *HMA/QMS Density Gauge Operator's Manual* or the *Superpave Hot Mix Asphalt Quality Management System Manual* for additional information concerning QMS requirements. The 3430 nuclear gauge must be in the Soils Mode (Proctor) when testing ABC, CTBC, or FDR for density acceptance. Refer to the appropriate section in this manual for establishing a target density. To select Marshall or Proctor test mode, press [MA/PR] (on keypad) and the display will be as follows:

MA: (↓↑)

Change MA Value?

Press the up [↑] or down [↓] arrow keys to scroll between the MA (Marshall) and PR (Proctor) functions. Once in the "PR:" test mode selection window, as shown below, press [YES] to change the current Proctor (target density) value.

PR: (↓↑)

Change PR Value?

After [YES] is pressed the display will be as follows:

PR:

(↓ ↑ or ENTER)

Using the up [↑] or down [↓] arrow keys, scroll through the (flashing) 0-9 digit for the first number to select a value. Once the correct value is displayed press [ENTER].

NOTE: The decimal point may be selected at any position in the Marshall or Proctor value Example: .702, 7.02, 70.02, etc. After pressing [ENTER] the next character will start flashing. Continue using the arrow keys and [ENTER] function to select the desired characters until the correct density value is entered. Once the value is entered the gauge will display "READY". Once the target density is entered in the *PR* test mode the gauge will be set to test in the Soil Mode.

Depth Measurement Selection

The 3430 nuclear gauge has numerous depth positions for taking a density reading (see Figure 4) and the gauge must be set to the correct measurement depth prior to taking any measurements. Follow guidance provided Section 3 – Test Site Preparation (page 11) for selecting the proper depth to test. To enter a depth into a gauge press [DEPTH] and the display will be as follows:

Depth: in.

(↓ ↑ to Change)

Press the up [↑] or down [↓] arrow keys until the desired depth is displayed on the screen.

Source Rod Positions

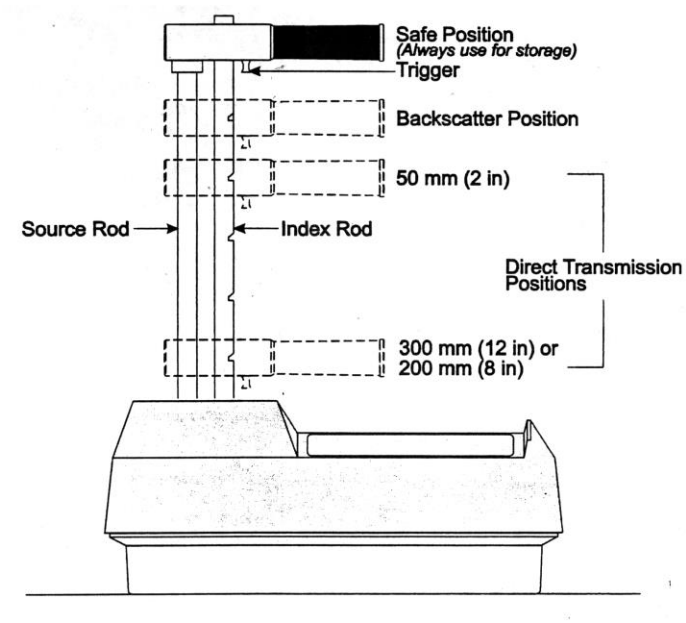

Figure 4 Source Rod Positions for a 3400 Series Nuclear Gauge (Troxler Nuclear Gauge Operation Manual)

The front of the gauge is closest to you when the 3430 is placed with the source rod to the left and control panel to the right. The handle contains the trigger mechanism which is used to position the source rod on the notched index rod. The source rod should always remain in the SAFE POSITION when the gauge is not in use.

Standard Count

Troxler nuclear gauges utilize low level radioactive sources for taking measurements. The sources in a 3430 gauge have a half-life of 30 years for Cesium-137 and 433 years for Americium 241: Beryllium. For example, if a nuclear gauge is manufactured with 8.0 milli-curies of Cesium 137, only 4.0 milli-curies will remain after 30 years. To ensure accurate testing a Standard Count must be taken daily to compensate for the continuous radioactive decay. Radioactive decay is a known occurrence and will not compromise the accuracy of the gauge provided a Standard Count is taken using the following procedures.

Standard Count Procedures

1. Prior to taking a Standard Count allow the gauge to "warm-up" for at least 10 minutes **Reason**: The electronics within a nuclear gauge need time to stabilize to ensure accurate measurements.
2. Take Standard Counts using the Reference Standard Count Block issued with the device.
3. Choose a proper Standard Count Site using the following criteria.
    a. Located at project site on the material being tested.
    b. Site should be dry (no freestanding water) and flat.
    c. Ensure bottom of the gauge is clean.
    d. Ensure the top and bottom of the reference block is clean.
    e. Site must be at least **10 feet** from any large vertical surfaces (i.e. barrier walls, vehicles, construction equipment, bridge structures, etc.).
    f. Site must be at least **33 feet** from any other radioactive sources (i.e. other nuclear gauges, high voltage power-lines, etc.).
    g. Site must be at least 4 inches thick of compacted asphalt, soil and/or concrete
4. Place the Reference Standard Count Block on the site.
5. Verify the site is level by tapping the corners of the Block (if it rocks move to another site).
6. Place the gauge on the Block and ensure the keypad side of the gauge is against the Metal Butt Plate located on the end of the Block (Refer to Figure 5).

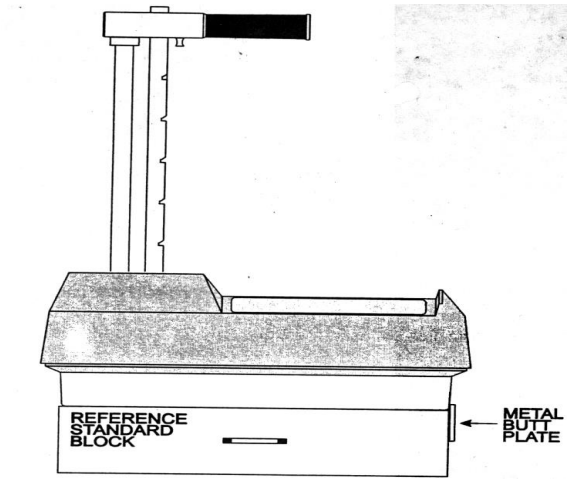

Figure 5 3400 Series Nuclear Gauge Standard Count (Troxler Nuclear Gauge Operation Manual)

7. Verify source rod is in the Safe Position. Lightly push down on the source rod handle to ensure it is in the safe position.
   Reason: As nuclear gauges are used the rubber O-ring gasket at the top of the guide rod can become worn which will allow for the source rod to be positioned (or pulled) slightly above the Safe Position. This generally occurs as the device is being carried by the handle. Though this change in position is very little, the Standard Count will be affected.
8. Press [STD] on the keypad and the following will be displayed:

```
DS=        MS=

New Std Cnt?
```

   a. Ensure previous DS (Density Standard Count) and MS (Moisture Standard Count) results have been recorded in the Standard Count Log Book (if not two Standard Counts will be required).
   b. Press [YES] for the following display:

```
Press START for

Standard Count
```

   c. Press [START], the device will begin a Standard Count and the display will show:

```
Standard Count

240 seconds
```

   d. Step approximately 4 feet away from the gauge during the count down.
      Reason: To follow A.L.A.R.A. safety procedures and prevent any possible influence to the device while performing a Standard Count.
   e. After counting down 240 seconds, the display will be:

```
Standard Count

DS=        MS=
```

   f. Record date, DS, and MS results in the Standard Count Log Book.
      i. Verify DS result is within 1% of previous DS result.
      ii. Verify MS result is within 2% of previous MS result.
9. If the Standard Count results are within tolerances proceed with testing procedures.
10. If the Standard Count results are not within tolerances the following steps should be followed:
    a. Verify that all proper Standard Count Setup Procedures were followed.

b. If proper procedures were <u>not</u> followed, correct issue and take another Standard Count.
c. If proper Standard Count Procedures were followed then:
    i. If less than a month has passed since the last Standard Count or the failure is greater than 5 %.
    ii. Contact a Technical Trainer or the gauge manufacturer.
    iii. If more than a month has passed since the last Standard Count and the failure is less than 5%.
    iv. Take another Standard Count.
    v. If the second Standard Count results are not within tolerances of the first Standard Count taken that day, contact a Technical Trainer or the gauge manufacturer.

11. Once test parameters are established and the Standard Count is completed and falls within tolerances, the nuclear gauge can be used to take density measurements.

Moisture Offset

Determine the moisture offset (or *k* factor) using procedures described in the *Moisture Offset Determination Procedures* (page 18). Press [SPECIAL] to being entering the offset.

-Set Units-

(↑ ↓ or Enter)

Press the down arrow [↓] key once to enter the Offset menu. Press [START/ENTER] and the following display will appear:

Offset: Density

(↑ ↓ or Enter)

Press the down arrow [↓] key once and the following display will appear.

Moist Offset OFF

Want to enable?

To enable the moisture offset, press [ON/YES].

K=0.0

(↑ ↓ or ENTER)

Use the down [↓] and up [↑] arrow keys to enter the calculated *k* factor. A negative offset can be entered by pressing the down [↓] arrow **first** and the remaining digits can be keyed in. Once all digits are entered, the device will enable the offset.

Moisture Offset ON

Appendix B - Field Operation Procedures for Troxler 3440

When a nuclear gauge is initially purchased or an operator is not familiar with the device, he/she should review the manufacturer's operation manual (supplied with the nuclear gauge). Knowledge gained from the manufacturer's manual will help to ensure the gauge is operated safely and efficiently. If an operator is still unsure of any procedures after reviewing the manufacturer's manual, this manual or the *NCDOT Radiological Safety Manual for Portable Nuclear Density Gauges*, he/she should contact a Technical Trainer for assistance.

Best Procedures for Battery Care

The nuclear gauge uses Ni-cad batteries as a power source. A fully charged battery pack will remain operational for approximately 4 – 6 weeks under normal conditions (depending on use). Ni-cad batteries develop a memory and following proper procedures is necessary to prevent damaging the batteries.

Procedures:

- Batteries should not be recharged unless the "Battery Low" indicator is visible on the LCD display.
- Only in an emergency situation, recharge gauge using the cigarette charger (DC) in vehicle. When charging in a vehicle, the following procedures apply:
    - Use correct charger (supplied by manufacturer).
    - Carefully plug charger into gauge first and then into cigarette charger.
    - DO NOT sit in vehicle with the gauge while the device is charging.
    - A 30-minute charge should be enough to complete the day's testing.
    - DO NOT turn vehicle on or off while charging a gauge (electrical surges occur when a vehicle is turned off or on; surges reduce battery life of the Ni-cad and can damage the gauge electronics.
    - Once a 30 minute charge is complete, unplug charger from cigarette charger first and then carefully unplug cable from gauge (jerking charger can break charging port).
    - Once gauge is returned to the storage facility charge device overnight to provide it a full charge (follow procedures for overnight (full) charge listed below).
- When providing an overnight (full) charge to a gauge, the following procedures apply:
    - Use correct charger (supplied by manufacturer).
    - If possible use a surge protector.
    - Carefully plug charger into gauge first and then plug into electrical supply.
    - Once device is plugged in it should cut on and display 14 hours remaining.
    - Allow gauge to charge overnight.
    - Keep in mind that some electrical outlets are controlled by a light switch; ensure the electrical outlet is not controlled, if it is do not turn off the light switch while charging the gauge.

- Once gauge is fully charged, unplug charger from the electrical outlet first then carefully unplug cable from device (jerking charger can break charging port).

If the nuclear gauge will not hold a charge properly contact the Technical Trainer for assistance.

Turning the gauge "ON"

When first turning gauge on, the LCD will fill with test characters prior to proceeding to the self-test phase. Under certain conditions the gauge will shut off after two hours of no activity. During the character display test the screen will display:

```
Testing LCD…

0123456789ABCDEFGHIJKL
MNOPQRSTUVWXYZ!@#$%
^&*).=
```

After two seconds, the gauge will perform a 300 second self-test:

```
Troxler 3440
V:          SN:
Company Name
(Test:     sec.)
```

After the self-test is complete, the display will be:

```
Troxler 3440
V:          SN:
Company Name
(press any key)
```

Press any key for the "READY" display:

```
<READY> 9:10 AM
Depth:
Time:
Batt Volts
```

Nuclear Gauge Test Parameter Set-up

Setting Measurement Units

Prior to taking density measurements, the operator should determine the unit of measurement required for screen display and or printouts. The available selections are either metric or US. To execute the Set Units function, press [SHIFT] and [SPECIAL] for:

```
SPECIAL FUNCTION
YES – Next menu
1 – Stat Test
2 – Drift Test
```

Press [YES] (to scroll thought menu functions) three times for the display:

```
YES – Next menu
9 – Set Units
10 – Baud Rate
11 – Comm Protocol
```

Press [9] to access the Set Units function. The display will be as follows:

```
UNITS in PCF
Press:  1 - PCF
        2 - METRIC
ENTER – No Change
```

Or if the gauge in currently has the unit set in metric the display will be:

```
UNITS in METRIC
Press:  1 - PCF
        2 - METRIC
ENTER – No Change
```

Press either [1] or [2] to select the desired unit. The gauge will remain in the selected unit mode until reset.

Count Time Selection

The 3440 nuclear gauge provides three different count times (or count duration) that can be used when taking readings. The count durations include: 15-seconds, 1-minute, and 4-minutes. Longer count time provides greater accuracy of the density measurement. Currently, the Department requires all nuclear gauge density measurements be taken using a **1-minute count time**. To select a count time, press [TIME] (on keypad) and the display will be as follows:

```
TIME:        min
  1 – 15 sec.
  2 – 1 min.
  3 – 4 min.
```

Press [2] to set the count time to 1-minute. Once select the gauge will return to the "READY" display.

Test Mode Selection (Marshall/Proctor)

Though the 3440 nuclear gauge has an asphalt test mode (Marshall), current *QMS Program* requirements only allow nuclear gauges with thin-lift and printer capabilities to be used on asphalt; therefore, the 3440 device cannot be used for density acceptance testing on asphalt. Refer to the latest edition of the *HMA/QMS Density Gauge Operator's Manual* or the *Superpave Hot Mix Asphalt Quality Management System Manual* for additional information concerning QMS requirements. The 3440 nuclear gauge must be in the Soils Mode (Proctor) when testing ABC, CTBC, or FDR for density acceptance. Refer to the appropriate section in this manual for establishing a target density. To select a Test Mode press [SHIFT] then [MODE] and the display will be as follows:

```
MODE:
Select: 1 – SOIL
        2 – ASPHALT
  (CE to Exit)
```

Press [1] to select the Soils Mode and after a short delay the display will return to "READY".

Entering/Changing Target Density

To enter or change the target density press [PROCTOR/MARSHALL] for the following display:

```
MA = _______
PR = _______
Do you want to make a
change?
```

Press [YES] and following display will appear:

```
Which on to change?
1 – MA
2 - PR
```

Select [2] for Proctor and the display will appear:

```
PR = _______

Press ENTER when
complete
```

Use the keypad to enter the target density into the nuclear gauge.

Source Rod Positioning

The front of the gauge is closest to you when the 3440 is placed with the source rod to the left and control panel to the right. The handle contains the trigger mechanism which is used to position the source rod on the notched index rod. The source rod should always remain in the SAFE POSITION when the gauge is not in use.

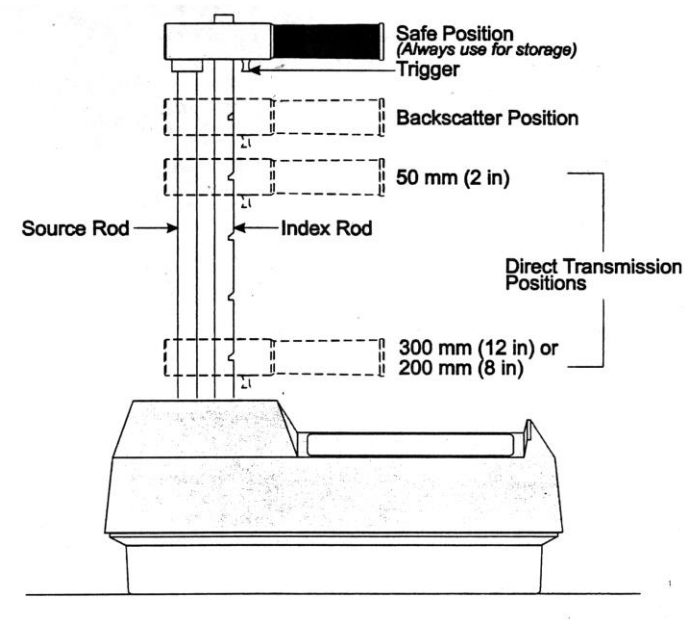

Figure 6 Source Rod Positions for a 3400 Series Nuclear Gauge (Troxler Nuclear Gauge Operation Manual)

Standard Count

Troxler nuclear gauges utilize low level radioactive sources for taking measurements. The sources in a 3440 gauge have a half-life of 30 years for Cesium-137 and 433 years for Americium 241: Beryllium. For example, if a nuclear gauge is manufactured with 8.0 milli-curies of Cesium 137, only 4.0 milli-curies will remain after 30 years. To ensure accurate testing a Standard Count must be taken daily to compensate for the continuous radioactive decay. Radioactive decay is a known occurrence and will not compromise the accuracy of the gauge provided a Standard Count is taken using the following procedures.

Standard Count Procedures

1. Prior to taking a Standard Count allow the gauge to "warm-up" for at least 10 minutes
   Reason: The electronics within a nuclear gauge need time to stabilize to ensure accurate measurements.
2. Take Standard Counts using the Reference Standard Count Block issued with the device.
3. Choose a proper Standard Count Site using the following criteria:
   a. Located at project site on the material being tested.
   b. Site should be dry (no freestanding water) and flat.
   c. Ensure bottom of the gauge is clean.
   d. Ensure the top and bottom of the reference block is clean.

e. Site must be at least **10 feet** from any large vertical surfaces (i.e. barrier walls, vehicles, construction equipment, bridge structures, etc.).
f. Site must be at least **33 feet** from any other radioactive sources (i.e. other nuclear gauges, high voltage power-lines, etc.).
g. Site must be at least 4 inches thick of compacted asphalt, soil and/or concrete.

4. Place the Reference Standard Count Block on the site.
5. Verify site is level by tapping the corners of the Block (if the block rocks, move to another site).
6. Place the gauge on the Block and ensure the keypad side of the gauge is against the Metal Butt Plate located on the end of the Block (Refer to Figure 7 below).
7. Verify source rod is in the Safe Position. Lightly push down on the source rod handle to ensure it is in the safe position.
   Reason: As nuclear gauges are used the rubber O-ring gasket at the top of the guide rod can become worn which will allow for the source rod to be positioned (or pulled) slightly above the Safe Position. This generally occurs as the device is being carried by the handle. Though this change in position is very little, the Standard Count will be affected.

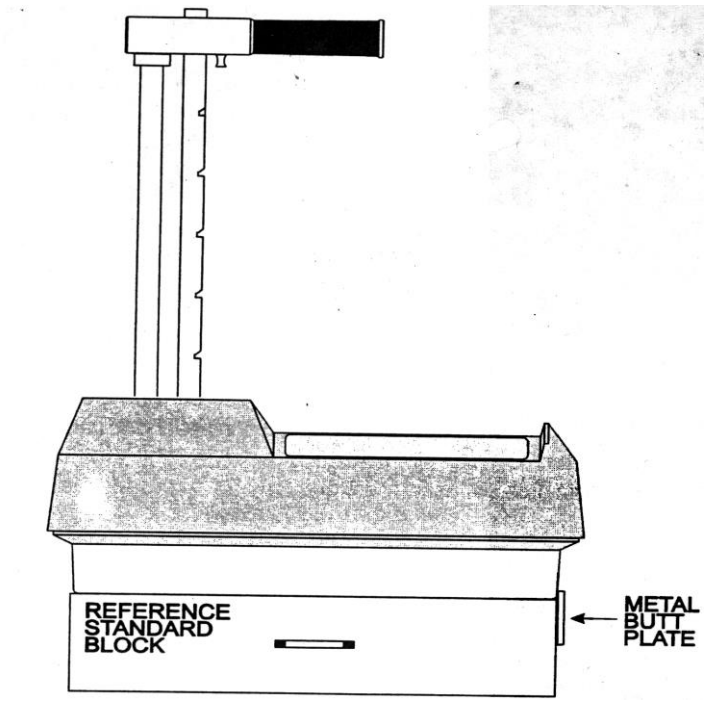

Figure 7 3400 Series Nuclear Gauge Standard Count (Troxler Nuclear Gauge Operation Manual)

8. Press [STANDARD] on the keypad and the following will appear:

```
-Standard Count -
DS = _________
MS = ________
Take new count?
```

9. Press [YES] for the following display:

```
Is the gauge on Std. Block &
Source Rod in SAFE pos.?
```

10. Ensure gauge is positioned correctly on the Standard Block and source rod is in the Safe Position. Press [YES] to begin taking the four minute Standard Count.

```
Taking
Standard Count
240 seconds remaining
```

11. Once Standard Count begins, step back from gauge approximately 4 feet
    Reason: Follow A.L.A.R.A. principles and prevent standard count from being affected by standing too close to the device.
12. After Standard Count completion, the display will show the results:

```
MS = __________ - ____%P
DS = ___________ - ___%P
Do you want to use the new
STD?
```

Standard Count Fails Gauge Tolerance

1. If the Standard Count fails (gauge tolerance) the following steps should be followed:
    a. Verify that all proper Standard Count Setup Procedures were followed.
    b. If proper procedures were <u>not</u> followed do not accept new Standard Count Reason – The accuracy of the new Standard Count is questionable.
    c. Correct issue and repeat Standard Count following proper procedures.
2. If proper Standard Count Procedures were followed then:
    a. If less than a month has passed since the last Standard Count or the failure is greater than 5 % do not accept the new Standard Count.
    b. Take another Standard Count.

c. If the second Standard Count fails, contact a Technical Trainer or gauge manufacturer.
d. Erase Standard Counts (in gauge memory) if more than a month has passed since the last Standard Count was performed and the failure is less than 5 % (follow procedures provided in the gauge operator's manual for erasing standard counts).
e. Take 4 new Standard Counts (following proper procedures).
f. If the fourth Standard Count passes, record results.
g. If the fourth Standard Count fails contact a Technical Trainer or the gauge manufacturer.

Moisture Offset

Determine the moisture offset (or *k* factor) using procedures described in the *Moisture Offset Determination Procedures* (page 18). Press [OFFSET] to begin entering the offset. The following display will appear.

```
-OFFSET – Select:
1 – Dens.    –OFF -
2 – Moist. – OFF -
3 – Trench – OFF -
```

Select [2] to enable a moisture offset the display will be:

```
Moisture Offset -
DISABLED
Do you want to ENABLE?
```

Press [YES] for the display:

```
Moisture Offset -
K = x.xx
Do you want a new M-
Offset?
```

Press [YES] to change the moisture offset (pressing [NO/CE] leaves the factors unchanged).

The display will be:

```
Select source
of Offset:
1 – gauge derived
2 – stored value
```

Select [1] (gauge derived) and the display will be:

```
Select:
1 – True  M x.x  %
2 – Gauge M x.x %
ENTER to enable
```

Two values must be input to determine the moisture offset value (*k* factor). The True Moisture (or *%Moist(in-place)* which is determined by "burning" an in-place moisture sample) and Gauge Moisture (or *%Moist(gauge)* which is determined by taking a density reading with the nuclear gauge). The Gauge Moisture reading and True Moisture should have been obtained following procedures described in the *Moisture Offset Procedures* (page 18).

Press [1] to enter the True Moisture (or *%Moist(in-place)*). Display will appear as:

```
True Moisture
x.x   %
Press ENTER
When completed
```

Input in-place moisture value and press [START/ENTER]

Display should return to selection window for input True and Gauge Moisture. Press [2] for the following display:

```
Gauge Moisture -
x.x     %
Press ENTER
When completed
```

Using keypad input moisture value determined by nuclear gauge and press [START/ENTER]. The nuclear gauge will calculate the *k* factor value and provide the option of storing it in memory for later use. Pressing [NO/CE] will enable the offset without storing it.

Storing Density Measurements

The 3440 has the capability to store density measurements in memory so the data can be printed or downloaded to a computer. Though printing data is currently not required if data result storage is needed, refer to the gauge operator's manual to properly set parameter for storing and printing density results. The gauge <u>must</u> be properly setup prior to storing any measurements.

Appendix C - Field Operation Procedures for Troxler 3450

When a nuclear gauge is initially purchased or an operator is not familiar with the device, he/she should review the manufacturer's operation manual (supplied with the nuclear gauge). Knowledge gained from the manufacturer's manual will help to ensure the gauge is operated safely and efficiently. If an operator is still unsure of any procedures after reviewing the manufacturer's manual, this manual or the *NCDOT Radiological Safety Manual for Portable Nuclear Density Gauges*, he/she should contact a Technical Trainer for assistance.

Best Procedures for Battery Care

The nuclear gauge uses Ni-cad batteries as a power source and also has six AA alkaline batteries as an emergency backup power source. A fully charged battery pack will remain operational for approximately 4 – 6 weeks under normal conditions (depending on use). Ni-cad batteries develop a memory and following proper procedures is necessary to prevent damaging the batteries.

Procedures:

- Batteries should not be recharged unless the "Battery Low" indicator is visible on the LCD display.
- Only in an emergency situation, recharge gauge using the cigarette charger (DC) in vehicle. When charging in a vehicle, the following procedures apply:
    - Use correct charger (supplied by manufacturer).
    - Carefully plug charger into gauge first and then into cigarette charger.
    - DO NOT sit in vehicle with the gauge while the device is charging.
    - A 30-minute charge should be enough to complete the day's testing.
    - DO NOT turn vehicle on or off while charging a gauge (electrical surges occur when a vehicle is turned off or on; surges reduce battery life of the Ni-cad and can damage the gauge electronics.
    - Once a 30 minute charge is complete, unplug charger from cigarette charger first and then carefully unplug cable from gauge (jerking charger can break charging port).
    - Once gauge is returned to the storage facility charge device overnight to provide it a full charge (follow procedures for overnight (full) charge listed below).
- When providing an overnight (full) charge to a gauge, the following procedures apply:
    - Use correct charger (supplied by manufacturer).
    - If possible use a surge protector.
    - Carefully plug charger into gauge first and then plug into electrical supply.
    - Once device is plugged in it should cut on and display 14 hours remaining.
    - Allow gauge to charge overnight.

- Keep in mind that some electrical outlets are controlled by a light switch; ensure the electrical outlet is not controlled, if it is do not turn off the light switch while charging the gauge.
- Once gauge is fully charged, unplug charger from the electrical outlet first then carefully unplug cable from device (jerking charger can break charging port).

If the nuclear gauge will not hold a charge properly, contact a Technical Trainer or gauge manufacturer for assistance.

Turning the gauge "ON"

When first turning gauge on, the LCD will fill with test characters prior to proceeding to the self-test phase. After completing the self-test the display will show:

```
Charger - OFF
NiCad – In Use
Alkaline - Ready
Press ENTER
```

The first line indicates if the charger is connected and the next two lines display status of the Ni-cad and alkaline batteries. Press down [↓] arrow key to view battery voltage. Press [ENTER] and the gauge will go into a 10 minute warm-up mode to allow the electronics to stabilize. The gauge should be allowed to warm-up prior to taking any measurements or standard count. After the 10 minute warm-up period, the gauge will do into the ready screen. The display will be as follows:

```
READY – ASPH Mode
Depth – STD 10:21 am
Tim – 60 sec 06/20/2000
Pr#: Your project
```

From the "READY" screen any gauge function can be accessed. To conserve power the gauge will go into a *Sleep Mode* after thirty seconds of no use. All data and settings are protected. Press any key <u>other</u> than [ON] or [OFF] to exit the *Sleep Mode*.

Nuclear Gauge Test Parameter Set-up

Setting Measurement Units

Prior to taking density measurements, the operator should determine the unit of measurement required for screen display and/or printouts. The available selections are either metric or US. To execute the Set Units function, press [SPECIAL] for:

```
1 – Special Operation
2 – Gauge Status/Test
3 – Memory Functions
4 – Gauge Setup
```

Press [4] to select the *Gauge Setup* menu. The display will be:

```
1 – Set Time/Date      ↕
2 – Print Setup
3 – Depth Indicator
4 – Set Beeper Level
```

Use the down [↓] arrow to scroll through the list of functions. Press [8] to access the *Set Unit* function. The display will be:

```
Unit in pcf
  1 – pcf
  2 – kg/m³
  3 – g/cm³
```

Enter the number of the desired unit for testing (i.e. [1] for pcf).

Count Time Selection

The 3450 nuclear gauge provides three different count times (or count duration) that can be used when taking readings. The count durations include: 15-seconds, 1-minute, and 4-minutes. Longer count time provides greater accuracy of the density measurement. Currently, the Department requires all nuclear gauge density measurements be taken using a **1-minute count time**. To select a count time, press [TIME] (on keypad) and the display will be as follows:

```
Count Time 60 sec
    1 – 15 Seconds
    2 – 1 Minute
    3 – 4 Minutes
```

Enter the number of the desired count time (i.e. [2] for 1-minute).

Measurement Mode Selection

The 3450 nuclear gauge may be utilized to test asphalt, base course and soil, and it provides three different testing modes: *Soil Mode*, *Asphalt Mode*, and *Thin-layer Mode*. The gauge must be set in *Soil Mode* for testing base course materials or soil. For testing asphalt on QMS projects refer to the latest edition of the *HMA/QMS Density Gauge Operator's Manual*. To select a test mode press [MODE] for the display:

```
MODE
1 – Soil Mode
2 – Asphalt Mode
3 – Thin-Layer Mode
```

Enter the number of the desired test mode (i.e. [1] for Soil Mode).

Entering/Changing Target Density

Once a target density is determined, press [TARGET] for the display:

```
1 – PR = xxx.x
2 – MA =xxx.x
3 –Voidless = xxx.x
4 – Voidless/MA = pair
```

Press [1] to input target density for testing base course material. The display will be:

```
Proctor Values:
1: xxx.x    2: xxx.x
3: xxx.x    4: xxx.x
5: New      6: Disable
```

Press [5] and input a new target value. After the value is entered, press [ENTER]. The gauge will then ask if the operator wants to store the value in memory. To store the target value, press [YES] and then select one of the storage cell (1-4). Entering a new value in a storage cell will erase an existing value stored in the same cell. When prompted to store a target value, the operator may press [NO] and the value will not be entered into a memory cell, however, the value will remain the existing target value.

Source Rod Positioning

The front of the gauge is closest to you when the 3450 is placed with the source rod to the left and control panel to the right. The handle contains the trigger mechanism which is used to position the source rod on the notched index rod. The source rod should always remain in the SAFE POSITION when the gauge is not in use.

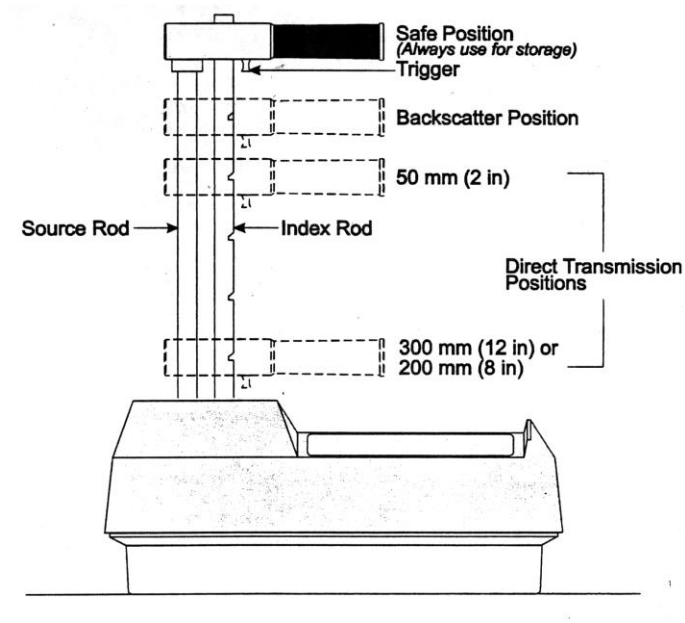

Figure 8 Source Rod Positions for a 3400 Series Nuclear Gauge (Troxler Nuclear Gauge Operation Manual)

Standard Count

Troxler nuclear gauges utilize low level radioactive sources for taking measurements. The sources in a 3450 gauge have a half-life of 30 years for Cesium-137 and 433 years for Americium 241: Beryllium. For example, if a nuclear gauge is manufactured with 8.0 milli-curies of Cesium 137, only 4.0 milli-curies will remain after 30 years. To ensure accurate testing a Standard Count must be taken daily to compensate for the continuous radioactive decay. Radioactive decay is a known occurrence and will not compromise the accuracy of the gauge provided a Standard Count is taken using the following procedures.

Standard Counts affect accuracy of density gauge measurements therefore, following proper procedures will help to ensure the highest degree of accuracy possible

Standard Count Procedures

1. Prior to taking a Standard Count allow the gauge to "warm-up" for at least 10 minutes **Reason**: The electronics within a nuclear gauge need time to stabilize to ensure accurate measurements.
2. When testing with a 3450 Nuclear Gauge always take a Standard Count using the Reference Standard Count Block.
3. Choose a proper Standard Count Site using the following criteria:

a. Located at the project site on the material being tested.
b. Site should be dry (no freestanding water) and flat.
c. Ensure bottom of the gauge is clean.
d. Ensure the top and bottom of the reference block is clean.
e. Site must be at least **10** feet from any large vertical surfaces (i.e. barrier walls, vehicles, construction equipment, bridge structures, etc.).
f. Site must be at least **33** feet from any other radioactive sources (i.e. other nuclear gauges, high voltage power-lines, etc.).
g. Site must be at least 4 inches thick of compacted asphalt, soil and/or concrete

4. Place the Reference Standard Count Block on the site.
5. Verify the site is level by tapping the corners of the Block (if it rocks move to another site).
6. If using a 3450 Nuclear Gauge place the gauge on the Block and ensure the keypad side of the gauge is against the Metal Butt Plate located on the end of the Block (Refer to Figure 9).

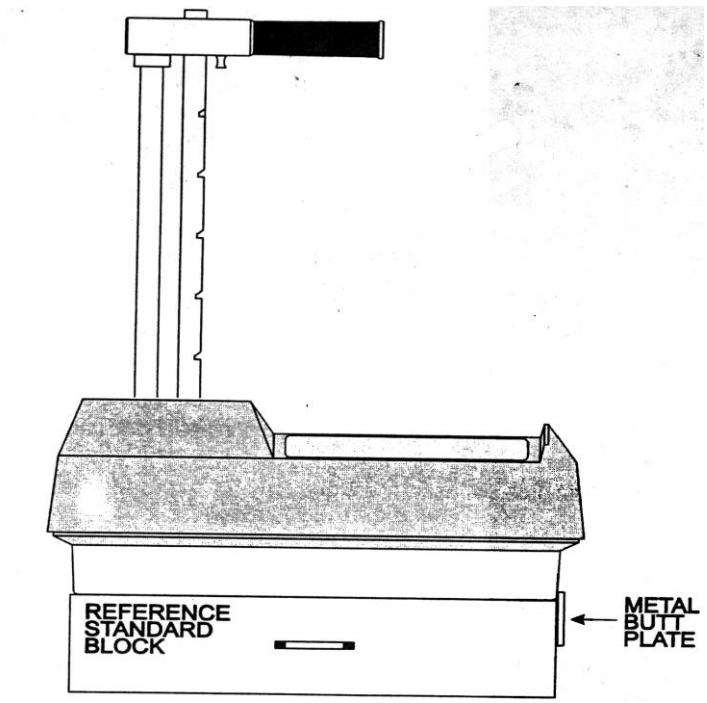

Figure 9 3400 Series Nuclear Gauge Standard Count (Troxler Nuclear Gauge Operation Manual)

7. Verify source rod is in the safe position. Lightly push down on the source rod handle to ensure it is in the safe position.
   Reason: As nuclear gauges are used the rubber O-ring gasket at the top of the guide rod can become worn which will allow for the source rod to be positioned (or pulled) slightly above the Safe Position. This generally occurs as the device is being carried by the handle. Though this change in position is very little, the Standard Count will be affected.

8. If using a 3450 press [STANDARD] on the keypad and follow directions displayed on the LCD.

```
DS = _______ _______
MS = _______
 1 – Take new count
 2 – View counts
```

9. Press [1] to take a Standard Count. The display will be:

```
Put Rod in STD Pos
Place Gauge
On Standard Block
Press Enter
```

10. Press [ENTER] to start the Standard Count.
11. While performing a 4-minute Standard Count step away from the nuclear gauge about 4 feet.
    Reason: To follow A.L.A.R.A. safety procedures and prevent any possible influence to the device while performing a Standard Count.
12. Once completed, the Standard Count results will be displayed on the LCD.
13. If using a 3450 the depth strip must be calibrated immediately following the Standard Count. To properly perform this function follow steps displayed on the LCD.
    Reason: If the depth strip is not properly calibrated all measurements will be affected.

Standard Count Fails Gauge Tolerance

1. If the Standard Count fails (gauge tolerance) the following steps should be followed:
   a. Verify that all proper Standard Count Setup Procedures were followed.
   b. If proper procedures were <u>not</u> followed do not accept new Standard Count.
      Reason – The accuracy of the new Standard Count is questionable.
   c. Correct issue and repeat Standard Count following proper procedures.
2. If proper Standard Count Procedures were followed then:
   a. If less than a month has passed since the last Standard Count or the failure is greater than 5 % do not accept the new Standard Count.
   b. Take another Standard Count.
   c. If the second Standard Count fails, contact a Technical Trainer or gauge manufacturer.
   d. Erase Standard Counts (in gauge memory) if more than a month has passed since the last Standard Count was performed and the failure is less than 5 %.
   e. Take 4 new Standard Counts (following proper procedures).
   f. If the fourth Standard Count passes, record results.
   g. If the fourth Standard Count fails contact a Technical Trainer or the gauge manufacturer.

Moisture Offset

Determine the moisture offset (or *k* factor) using procedures described in the *Moisture Offset Determination Procedures* (page 18). Press OFFSET to begin entering the offset. Select [2] (Moisture Offset) and then select "Change Offset" menu by pressing [3]. The display should appear as:

```
Moisture Offset
1 – Stored Offset
2 – Gauge Derived
3 – Keypad Entry
```

Select [3] and follow gauge prompts to enter the in-place moisture result and nuclear gauge moisture value. The nuclear gauge will calculate the *k* factor value. The *k* factor value can be saved in memory for future recall if needed.

Storing Density Measurements

The 3450 has the capability to store density measurements in memory so the data can be printed or downloaded to a computer. Though printing data is currently not required if data result storage is needed, refer to the gauge operator's manual to properly set parameter for storing and printing density results. The gauge <u>must</u> be properly setup prior to storing any measurements.

Appendix D Field Operation Procedures for Humboldt HS-5001 EZ

When a nuclear gauge is initially purchased or an operator is not familiar with the device, he/she should review the manufacturer's operation manual (supplied with the nuclear gauge). Knowledge gained from the manufacturer's manual will help to ensure the gauge is operated safely and efficiently. If an operator is still unsure of any procedures after reviewing the manufacturer's manual, this manual or the *NCDOT Radiological Safety Manual for Portable Nuclear Density Gauges*, he/she should contact a Technical Trainer for assistance.

Turning the Gauge "ON"

The gauge uses six alkaline AA size batteries as a power source. When first turned on, the gauge will proceed through a self-test routine. After the self-test, the gauge condition at the time of the last use is loaded from memory. If it was turned off with an active measurement in the registers, the measurement is recalled. Press [PWR]. If needed a backlight function is available to light the LCD during night operations. To light the display press [BACKLIGHT].

Setting Measurement Units

Prior to taking measurements, the operator should determine if the project is metric or U.S. and set the gauge accordingly. To execute the *set units* function, press [MAIN MENU] for the following display.

```
*DATA          03/10/14
*SETUP         3:15:00
*ENGINEERING
                DEPTH = SAF
```

Press [F2] for the display:

```
*SETUP2
*SET MEASURE MODES
*SET TRNCH COR.
*SET TARGETS
```

Press [F1] for the display:

```
*SET DATE
*SET TIME
*UNITS = PCF/SI
```

Press [F3] to enter the desired units. Press [MAIN MENU] to exit the function.

Count Time Selection

The HS-5001 EZ nuclear gauge provides three different count times (or count duration) that can be used when taking readings. The count durations include: FAST=0.25 min., NORM=1.0 min., and SLOW=4.0 min. Longer count time provides greater accuracy of the density measurement. Currently, the Department requires all nuclear gauge density measurements be taken using a **1-minute count time ("NORM" setting)**. To select a count time, press [MAIN MENU] and the display will be:

```
*DATA          03/10/14
*SETUP         3:15:00
*ENGINEERING
                DEPTH = SAF
```

Press [F2] for the display:

```
*SETUP2
*SET MEASURE MODES
*SET TRNCH COR.
*SET TARGETS
```

Press [F2] for the display:

```
*MEAS=FAST/NORM/SLOW
*STD=4MIN/16MIN
*TYPE=ASPH/SOIL/THIN
*DEPTH=AUTO/MANUAL
```

Press [F1] and select NORM for a 1-minute count time.

Measurement Mode Selection

Though the HS-5001 EZ nuclear gauge has an asphalt test mode "ASPH", current *QMS Program* requirements only allow nuclear gauges with thin-lift and printer capabilities to be used on asphalt; therefore, the 5001 EZ device cannot be used for density acceptance testing on asphalt. Refer to the latest edition of the *HMA/QMS Density Gauge Operator's Manual* or the *Superpave Hot Mix Asphalt Quality Management System Manual* for additional information concerning QMS requirements. The 5001 EZ nuclear gauge must be in the "SOIL" Mode when testing ABC, CTBC, or FDR for density acceptance. To select a measurement mode, press [MAIN MENU] and the display will be:

```
*DATA          03/10/14
*SETUP         3:15:00
*ENGINEERING
                DEPTH = SAF
```

Press [F2] for the display:

```
*MEAS=FAST/NORM/SLOW
*STD=4MIN/16MIN
*TYPE=ASPH/SOIL/THIN
*DEPTH=AUTO/MANUAL
```

Press [F3] and select *soil* mode for base course materials.

Entering/Changing Target Density

Prior to performing density acceptance testing, a target density should be entered into the gauge. Refer to the appropriate section in this manual for procedures to determine the target density of the material being tested. Once the target density is determined, press [MAX"D"] to enter the value. The gauge will display the current value retained in memory. Utilize [F3] and [F4] to increase or decrease value until the correct target density is displayed.

Standard Count

Humboldt nuclear gauges utilize low level radioactive sources for taking measurements. The sources in a HS-5001 EZ gauge have a half-life of 30 years for Cesium-137 and 433 years for Americium 241: Beryllium. For example, if a nuclear gauge is manufactured with 9.0 milli-curies of Cesium 137, only 4.5 milli-curies will remain after 30 years. To ensure accurate testing a Standard Count must be taken daily to compensate for the continuous radioactive decay. Radioactive decay is a known occurrence and will not compromise the accuracy of the gauge provided a Standard Count is taken using the following procedures.

Standard Counts affect accuracy of density gauge measurements therefore, following proper procedures will help to ensure the highest degree of accuracy possible

Standard Count Procedures

1. Prior to taking a Standard Count allow the gauge to "warm-up" for at least 10 minutes. **Reason**: The electronics within a nuclear gauge need time to stabilize to ensure accurate measurements.
2. When testing with a HS 5001 EZ Nuclear Gauge always take a Standard Count using the Reference Standard Count Block.
3. Choose a proper Standard Count Site using the following criteria:
    a. Located at the project site on the material being tested.
    b. Site should be dry (no freestanding water) and flat.
    c. Ensure bottom of the gauge is clean.
    d. Ensure the top and bottom of the reference block is clean.
    e. Site must be at least **10** feet from any large vertical surfaces (i.e. barrier walls, vehicles, construction equipment, bridge structures, etc.).
    f. Site must be at least **33** feet from any other radioactive sources (i.e. other nuclear gauges, high voltage power-lines, etc.).
    g. Site must be at least 4 inches thick of compacted asphalt, soil and/or concrete.

4. Place the Reference Standard Count Block on the site.
5. Verify the site is level by tapping the corners of the Block (if it rocks move to another site).
6. Place the nuclear gauge on the Block and ensure the keypad is opposite of the Metal Butt Plate located on the end of the Block (Refer to Figure 10).

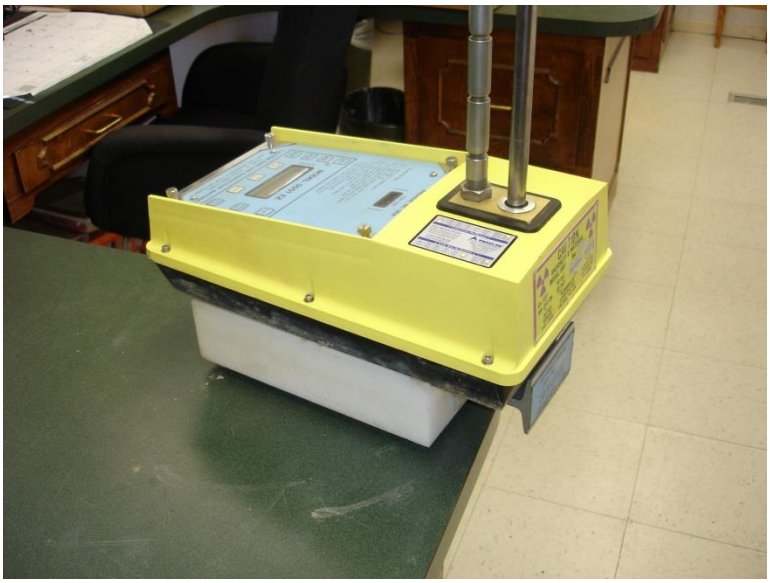

Figure 10 HS-5001 EZ Nuclear Gauge Standard Count

7. Verify source rod is in the safe position. Lightly push down on the source rod handle to ensure it is in the safe position.
8. Press [MAIN MENU] on the keypad and the display will be:

```
*DATA          03/10/14
*SETUP         3:15:00
*ENGINEERING
               DEPTH = SAF
```

9. Press [F2] and the display will be:

```
*SETUP2
*SET MEASURE MODES
*SET TRNCH COR.
*SET TARGETS
```

10. Press [F2] for the following display:

```
*MEAS=FAST/NORM/SLOW
*STD=4MIN/16MIN
*TYPE=ASPH/SOIL/THIN
*DEPTH=AUTO/MANUAL
```

11. Press [F2] until "4MIN" is flashing on the display.
12. Press [STD/STAT] and the display will be:

```
DS=xxxx          mm/dd/yy
MS=xxx
*TAKE NEW STD
*USE CURRENT STD
```

13. Press [F3] to take a new Standard Count or press [F4] to use the current Standard Count.
14. While performing a 4-minute Standard Count step away from the nuclear gauge about 4 feet.
    Reason: To follow A.L.A.R.A. safety procedures and prevent any possible influence to the device while performing a Standard Count.
15. Once completed, the Standard Count results will be displayed.
    a. If no errors occurred the display will be:

```
STD TEST RESULTS
DS=xxxx.x
MS=xxx.x
```

    b. If errors occurred, the display will be:

```
DS=xxxx        %ERR=xx.x
MS=xxx         %ERR=xx.x
*REJECT & TAKE NEW STD
*ACCEPT & TAKE NEW STD
```

Standard Count Displays Error Message

1. If the Standard Count displays an error the following steps should be followed:
    a. Verify that all proper Standard Count Setup Procedures were followed.
    b. If proper procedures were <u>not</u> followed reject new Standard Count.
       Reason – The accuracy of the new Standard Count is questionable.
    c. Correct issue and repeat Standard Count following proper procedures.
2. If proper Standard Count Procedures were followed then:
    a. If less than a month has passed since the last Standard Count or the failure is greater than 5 % do not accept the new Standard Count.

b. Take another Standard Count.
c. If the second Standard Count fails, contact a Technical Trainer or gauge manufacturer.
d. If more than a month has passed since the last Standard Count was performed and the failure is less than 5 %.
    i. Take 4 new Standard Counts (following proper procedures).
e. If the fourth Standard Count passes, record results.
f. If the fourth Standard Count fails contact a Technical Trainer or the gauge manufacturer.

Moisture Offset

Determine the moisture offset (or *Moisture Correction Factor KVAL*) using procedures described in the *Moisture Offset Determination Procedures* (page 18). The following equation should be used when testing with a HS-5001 EZ device to calculate the KVAL.

$$KVAL = \frac{\%M_{(oven\text{-}dry)} - \%M_{(gauge)}}{\%M_{(gauge)} + 100}$$

Once the value is calculated it should be entered into the gauge. Press [MAIN MENU] and the display will be:

```
*DATA          03/10/14
*SETUP         3:15:00
*ENGINEERING
                DEPTH = SAF
```

Press [F2] to access the SETUP function. The display will be:

```
*SETUP2
*SET MEASURE MODES
*SET TRNCH COR.
*SET TARGETS
```

Press [F4] to access the SET TARGET function. Press [F2] and the KVAL value should be flashing. Use the [F3] (increase) and [F4] (decrease) to set the desired value.

Storing Density Measurements

The HS-5001EZ has the capability to store density measurements in memory so the data can be printed or downloaded to a computer. Though printing data is currently not required if data result storage is needed, refer to the gauge operator's manual to properly set parameter for storing and printing density results. The gauge <u>must</u> be properly setup prior to storing any measurements.

Appendix E - Control Strip (M&T 514N) and Test Section (M&T 515N) Forms

M&T Form 514 N
Revised 4/10/2014

NORTH CAROLINA DEPARTMENT OF TRANSPORTATION
Division of Highways
Control Strip – Base Course Material

Project_____ County_____ Date_____ Control Strip No._____

Route_____ Material_____ Depth_____ Width_____ Quarry_____

Layer_____ Gauge Serial No._____ Test Mode_____ Laboratory Unit Weight_____

Lane_____ Begin Sta. _____ End Sta. _____

Nuclear Gauge Standard Counts			**Conventional Density Results (Ring Test)**
Density		Moisture	Station/Location_____ Test No. _____
_____	_____	_____	Percent Compaction_____

Enter Laboratory Unit Weight into gauge for taking Control Strip density measurements and record percentages.

Random No.		Increments		Random (calc.)		Test Site Location		Measurement Results		
Length	Width	Length	Width	Length	Width	Station	Offset	Dry Density	Percent Moisture	% of Lab. Unit Wgt.
A	B	C	D	A x C =	B x D =					
Average Dry Density (Units lb/ft^3 or kg/m^3) Enter result into gauge as the Target Density										

Comments

*By providing this data under my signature and/or HiCAMs certification number, I attest to the accuracy and validity of the data contained on the this form and certify that no deliberate misrepresentation of test results, in any manner, has occurred.

*Print Name Legibly w/HiCAMs No._____

*Signature_____ Res. Engr. _____

M&T Form 515 N
Revised 4/10/2014

NORTH CAROLINA DEPARTMENT OF TRANSPORTATION
Division of Highways
Test Section – Base Course Material

Project_____ County_____ Date_____ Control Strip No._____

Route_____ Material_____ Depth_____ Width_____ Quarry_____

Layer_____ Gauge Serial No._____ Test Mode_____ Target Density_____ lb/ft^3 or kg/m^3

Nuclear Gauge Standard Counts			**Moisture Offset**
Density		Moisture	Moisture Offset enabled? ☐ Yes ☐ No
_____	_____	_____	*K*-Value = _____ = _____

Test Section No.		Begin Station		End Station		Length /5= Increments					
Random No.		Increments		Random (calc.)		Test Site Location		Measurement Results			
Length	Width	Length	Width	Length	Width	Station	Offset	Percent Compaction	Percent Moisture	Pass	Fail
A	B	C	D	A x C =	B x D =						
Test Section Average (%)											

Test Section No.		Begin Station		End Station		Length /5= Increments					
Random No.		Increments		Random (calc.)		Test Site Location		Measurement Results			
Length	Width	Length	Width	Length	Width	Station	Offset	Percent Compaction	Percent Moisture	Pass	Fail
A	B	C	D	A x C =	B x D =						
Test Section Average (%)											

*By providing this data under my signature and/or HiCAMs certification number, I attest to the accuracy and validity of the data contained on the this form and certify that no deliberate misrepresentation of test results, in any manner, has occurred.

*Print Name Legibly w/HiCAMs No._____

*Signature_____ Res. Engr._____

Appendix F - Contact Information

Geopavement Section Staff			
Geotechnical Website	**https://connect.ncdot.gov/resources/Geological/Pages/default.aspx**		
Name	**Office**	**Mobile**	**Email**
Kevin Sebold Senior Geopavement Engineer	(919) 707-6880		ksebold@ncdot.gov
Joe Milkovits, Jr. Geopavement Engineer	(919) 707-6883		jmilkovists@ncdot.gov
Jon Miller, P.E. Geopavement Engineer	(919) 707-6882		jmiller@ncdot.gov
Daniel Popek, L.G., P.E. Geopavement Engineer	(919) 707-6881		dpopek@ncdot.gov
Cynthea Jaslolka Geopavement Engineer	(919) 707-6884		twjaslolka@ncdot.gov

GeoMaterials Laboratory Technical Training Staff			
Materials and Tests Website	**https://connect.ncdot.gov/resources/Materials/Pages/default.aspx**		
Name	**Office**	**Mobile**	**Email**
Jim Sawyer, P.E. GeoMaterials Training Engineer	(919) 329-4150	(919) 418-0771	jsawyer@ncdot.gov
J. J. Myers Field Engineer		(336) 596-8768	jjmyers@ncdot.gov
John Flowers, Jr. Tech. Trainer (Div. 1, 2, 4)		(919) 330-3466	jtflowers@ncdot.gov
Vacant Position (Div. 3, 5, 6)	(919) 329-4150		
Scotty Jarman Tech. Trainer (Div. 8, 10)		(919) 427-1639	sjarman@ncdot.gov
Mike Ricker Tech. Trainer (Div. 7, 9, 11)		(919) 219-2443	mdricker@ncdot.gov
Doug Phillips Tech. Trainer (Div. 12, 13, 14)		(828) 442-0946	jdphillips1@ncdot.gov
GeoMaterials Laboratory			
Name	**Office**	**Mobile**	**Email**
Mehdi Haeri GeoMaterials Engineer	(919) 329-4150	N/A	mhaeri@ncdot.gov
C.K. Su GeoMaterials Laboratory Engineer	(919) 329-4150	N/A	cksu@ncdot.gov

Field Operations (contact for assessment scheduling)			
Materials and Tests Website	**https://connect.ncdot.gov/resources/Materials/Pages/default.aspx**		
Name	**Office**	**Mobile**	**Email**
Maria Long Section Matls Spec. (Div. 1)	(252) 792-7627	(252) 799-1056	mmlong@ncdot.gov
Milton Rudd. Section Matls. Spec. (Div. 2)	(252) 296-3624	(252) 235-7069	mrudd@ncdot.gov
Dan Allen Section Matls. Spec. (Div. 3)	(910) 343-6356	(910) 279-0067	dallen@ncdot.gov
Bobby Watkins Section Matls. Spec. (Div. 4)	(252) 296-3576	(919) 868-2153	bwatkins@ncdot.gov
Rick Shearer Section Matls. Spec. (Div. 5)	(919) 329-4200	(919) 614-1229	eshearer@ncdot.gov
Field Operations (contact for assessment scheduling)			
Materials and Tests Website	**https://connect.ncdot.gov/resources/Materials/Pages/default.aspx**		
Name	**Office**	**Mobile**	**Email**
Guy Christian Section Matls. Spec. (Div. 6)	(910) 485-7213	(910) 322-0956	gchristian@ncdot.gov
Robert Fosque Section Matls. Spec. (Div. 7)	(336) 256-2567	(336) 312-3475	rfosque@ncdot.gov
Rusty Tucker Section Matls. Spec. (Div. 8)		(980) 521-0939	rtucker@ncdot.gov
Sandra Potts Section Matls. Spec. (Div. 9)	(704) 636-3367	(336) 909-0127	spotts@ncdot.gov
Mark Thomas Section Matls. Spec. (Div. 10)	(704) 847-1314	(704) 201-3916	markthomas@ncdot.gov
Tracy Church Section Matls. Spec. (Div. 11)	(336) 903-9105	(336) 984-0421	tchurch@ncdot.gov
Charles Bullock Section Matls. Spec. (Div. 12)	(704) 480-5472	(704) 838-3005	cdbullock@ncdot.gov
Rob Rhymer Section Matls. Spec. (Div. 13)	(828) 298-1516	(828) 768-0375	rrhymer@ncdot.gov
Michael Wood Section Matls. Spec. (Div. 14)	(828) 891-7911	(828) 553-4532	dmwood@ncdot.gov

Appendix G – Random Numbers

ASTM D-3665

	0	1	2	3	4	5	6	7	8	9
1	8121	3695	7367	7390	8568	9550	3107	3589	8240	3059
2	4185	5885	0699	3204	5610	3896	1692	2695	3354	9693
3	7423	7796	3747	8271	6052	8188	7913	4975	2525	3610
4	9153	3997	4351	5758	1611	0736	9949	9995	0791	5927
5	1617	6057	8761	8397	9092	0148	6552	7139	1588	0437
6	8760	3170	1224	4708	0815	7609	6584	4617	7047	6426
7	3588	2066	9567	9292	0174	4935	8792	5666	4876	7563
8	8103	5156	3440	4230	5757	5140	6858	5421	1223	8256
9	8871	2553	7202	1987	6385	6288	0497	0593	6161	1683
10	2558	2199	3805	9831	2606	0624	2742	6778	8157	3922
11	1647	1685	0752	8003	8052	2455	7920	1365	4418	6671
12	3135	8556	7712	6194	0847	4364	8858	2267	9994	4963
13	1724	3556	1740	5269	4034	9277	5271	2460	6228	9373
14	2328	3165	8382	7037	2065	4960	8404	6799	5599	9198
15	1350	8343	8993	2840	3880	6539	5501	9722	8424	2622
16	7427	7379	3549	1647	4225	0282	9025	2254	3500	7996
17	7022	0294	6714	9525	0941	3820	4074	8394	2468	9783
18	8582	9671	1036	5445	2233	6034	4240	2131	8345	7991
19	1345	4065	8880	5665	0032	7527	0726	8775	4522	2962
20	3849	0739	2216	6402	3115	4240	6081	2627	2578	9722
21	2250	7900	4486	2135	5081	2413	3685	5667	7988	4918
22	1078	4157	4885	8291	3507	0345	5105	9547	0599	5050
23	6836	1367	4019	5421	6796	1270	9592	0791	5013	5774
24	0978	2451	6865	3278	1912	7451	1343	8765	4038	9477
25	7835	8049	9898	8251	1842	7846	9007	9482	6945	6260
26	4356	9453	8545	5332	0915	6979	2074	2311	9361	8185
27	9158	3851	2403	5209	3580	1300	6650	3150	9335	5735
28	4316	7272	4590	6287	6553	9722	0058	0401	3953	8653
29	5549	7531	1942	3645	5393	0629	6401	3296	0927	2436
30	6446	5760	6850	8674	5189	9503	9662	6626	6170	8798
31	5533	5470	4593	4133	3524	9750	6566	4050	3014	9224
32	7379	0162	5237	1777	9430	2462	3288	5292	3377	8172
33	1664	5435	8368	3431	0291	8455	0159	9895	5849	5898
34	5630	6913	4948	7774	3575	0962	3186	9191	9381	0363
35	6847	7886	3963	8404	0751	0896	2633	9154	3847	5726
36	0950	4958	0297	1385	1083	8430	7831	4219	7010	1479
37	1363	4546	0731	3425	7256	0680	1903	7998	6275	1711
38	1184	2079	7299	9090	3535	3001	2088	1327	7482	8025
39	0736	5980	7034	6469	8688	6732	0461	5775	1210	7049
40	2673	8834	8132	0201	3634	0894	0819	6503	2522	6862
41	9059	7950	3589	1176	0131	8472	6691	6129	3032	5897
42	1605	7970	6152	4179	3269	1914	1468	9593	0850	2435
43	6865	3708	4096	0209	0469	7307	3216	3367	7560	9979
44	2379	2554	9753	2693	4604	8478	7480	7997	0441	8842
45	9821	7026	1331	3689	6738	8468	4876	5971	3939	2112
46	2140	9626	9884	3633	7163	5128	1821	9941	8127	5608
47	5432	6779	6373	6790	0845	7405	1457	6813	2481	6026
48	3460	8006	3670	6930	0523	5017	6487	1702	9237	1591
49	5265	7029	8790	6612	1052	8625	7070	3711	9177	8296
50	4271	3777	0048	6319	8807	0362	4318	9076	3108	2183

	0	1	2	3	4	5	6	7	8	9
51	4724	4526	5407	2546	8332	4853	4422	1499	4129	5573
52	1277	8872	2569	9657	2544	8421	8617	8572	8662	1449
53	7992	6889	3350	1842	3408	8162	9357	5693	8528	4256
54	1908	4882	1892	0335	0131	9624	1024	5572	0089	4228
55	9525	7954	0657	9898	1340	9036	8409	3500	3784	6469
56	6089	6132	9614	6758	0288	0108	8623	8408	3360	3024
57	4909	2362	5297	3386	8329	8149	0845	6834	8831	4806
58	7386	1628	1494	8937	7838	8812	2994	6349	7933	8200
59	7320	7019	8328	7948	3274	5229	5753	0248	2559	0390
60	9763	0440	7154	0970	1852	3077	1522	3851	9877	6720
61	7820	1467	9175	7889	7498	3613	5527	7392	8590	1015
62	3167	2673	5391	5861	0901	4319	8630	9741	5844	7179
63	1701	9045	6529	3580	5265	5790	0414	1969	6780	7105
64	9024	2687	9310	8705	6172	4296	4610	4770	9415	5817
65	6613	4140	2942	2429	9435	8638	8063	1782	6352	7470
66	8449	3176	2217	2969	9996	0447	0516	7859	4525	9581
67	2557	8074	1255	0774	0337	0577	1722	9844	2828	1217
68	9599	1141	1301	9528	2589	1320	7096	1065	3956	6446
69	1992	3807	2096	2780	3358	2803	1457	3717	7601	3117
70	9415	4611	2177	6089	5341	5515	5414	6149	9383	6722
71	6277	6742	2609	2270	6942	1263	8254	1222	7007	7702
72	6330	0455	9317	8445	4361	5738	5322	4667	1433	1937
73	3087	5719	9831	9429	4720	7923	3490	3870	4504	4822
74	1623	3781	9202	2754	1574	3176	3289	3261	9601	8993
75	3456	3994	6498	8484	2594	2955	4836	9337	1417	6546
76	4065	3370	8734	2929	4353	0030	8154	6112	8268	3625
77	3117	5586	3840	7581	0440	7342	1148	2381	9102	6323
78	5770	4381	6456	4863	6505	2027	3656	4672	4027	5691
79	3540	0884	0684	7373	7772	2173	5824	6140	5151	2873
80	1383	6130	0608	0641	1401	3446	0809	6275	4667	6200
81	1694	1598	9773	1641	7271	9571	0956	3317	0638	1462
82	2261	1353	1201	0736	8451	0263	0675	6441	5095	5745
83	0879	8102	3441	9589	6066	6034	2895	0705	8152	1118
84	0267	1101	5030	2776	4676	9728	9698	0278	3653	5743
85	2050	0889	3674	9318	0837	2335	5784	4499	8971	3147
86	6512	9995	8944	5634	7796	4263	9758	6645	1275	1092
87	7778	2306	9643	1905	5315	3015	3158	7265	0190	2208
88	8201	5616	9194	1858	9491	0217	4368	7537	5073	4929
89	2415	0561	8289	2994	7341	4908	1498	8806	9611	5683
90	1938	6471	6108	5497	8081	5295	2897	5618	7229	3668
91	8780	5691	2190	8789	2697	8130	1357	4497	4674	6903
92	8632	5993	7960	0241	5771	9741	9251	3265	6100	6505
93	8636	2303	8091	0273	2265	1886	6465	5330	3707	6802
94	2814	8569	7178	0352	7279	8659	3164	3247	3857	9803
95	7407	7803	7879	1235	4695	8607	5468	3632	5282	4763
96	6352	6868	2150	6844	7191	4442	1561	8629	8724	7650
97	3135	5350	8557	9532	7192	5708	2930	8740	2747	5827
98	6418	0736	8251	5329	6641	8120	8985	3926	6810	0857
99	2070	3609	9184	7250	1270	8171	3581	7679	8326	3488
100	6862	4480	5051	5262	8832	6762	0369	2089	6209	1998

	0	1	2	3	4	5	6	7	8	9
101	2899	1397	0235	0319	5904	0003	8088	1905	7733	8060
102	7825	5409	9375	8387	7821	4044	2004	3784	4062	1510
103	2554	7423	3644	2702	5572	1547	4754	7605	0586	7517
104	9202	0022	0512	9403	4981	0887	8136	3810	2234	0531
105	6587	4132	4073	1627	0845	7391	5286	9327	8620	8679
106	2936	3705	1683	6125	9589	4711	5039	2451	1535	1785
107	0866	5059	3535	4076	3550	7915	3887	4104	9853	0749
108	2291	1818	2466	7884	2218	2089	8594	4615	9316	4174
109	4657	3232	4034	2133	7406	5246	3377	8644	3751	7402
110	4684	1278	1045	7780	1042	3752	8510	4452	6530	4322
111	5150	0521	7345	5987	0250	0216	3283	6590	0612	5895
112	6216	0290	0287	1327	1261	6902	7833	6256	1022	6096
113	0299	4050	7214	6390	7254	0100	1926	6506	1355	0648
114	8268	5594	6620	4371	2606	9710	1366	9945	2715	7083
115	2147	1822	7118	9840	2088	9800	0022	8955	2936	9209
116	1993	1361	4090	4753	7990	2339	6809	2638	2294	4783
117	0888	8380	5567	0165	5333	9343	6287	0128	7050	9734
118	8392	0864	4284	1869	4291	8100	3582	2437	0650	8812
119	3474	8099	3307	8070	2799	5794	5904	4804	5860	4604
120	9301	9691	6256	6788	5190	8793	7480	2763	0468	1625
121	1853	7462	9459	9440	9875	7335	7369	8559	0987	9817
122	8015	2527	0764	8683	6457	3355	0294	1177	7623	3952
123	9671	5790	1460	9181	3987	6303	0321	3132	0770	7984
124	3144	7732	9614	3003	7232	0436	1470	5735	3160	5356
125	8246	3283	0251	6136	8041	3041	4981	2605	7530	0581
126	9410	9785	5355	5616	9907	9222	5300	3212	1632	0273
127	2616	5706	2815	1768	8394	0528	5177	1961	7451	0067
128	8657	8901	0217	5872	8963	8326	0714	8769	9706	0651
129	6101	0251	5333	5253	7051	5492	5837	9508	8029	2154
130	8736	4493	5116	1812	9457	9663	8396	0350	9900	7197
131	2240	8483	1383	3288	5045	6135	3773	0869	3415	8494
132	7945	5971	1429	9426	6198	2241	1371	6798	9069	0059
133	0107	7447	9726	0740	2626	8312	1683	6095	3929	4847
134	2686	3354	9387	1732	9036	2679	4551	0372	5562	1932
135	5762	2898	0169	9265	1804	8196	4461	3044	8148	3440
136	2362	0927	2213	1456	5872	7563	7873	8148	7408	9834
137	0943	2552	3463	5792	1722	5702	0579	2125	3553	7613
138	0968	5505	7917	7812	3297	0996	9626	3931	4954	8197
139	7411	6269	7709	2010	5424	7489	4087	1861	7894	2424
140	1229	9675	5555	1766	3242	2756	8831	1411	6424	6419
141	5477	7684	5707	6457	4473	4401	1814	1203	8406	1503
142	2924	2030	0232	0669	2015	2321	0028	3343	0103	9635
143	6147	3463	9393	6931	7262	0635	0100	2920	6879	9018
144	5397	1006	1167	8094	7679	9271	9529	2107	0380	2781
145	4924	4787	8326	3602	4829	8769	7156	3560	0245	0460
146	8302	2334	7454	2980	6858	8002	9723	6961	4359	2603
147	8116	1613	9955	7589	6207	6364	1470	4641	3399	4119
148	7772	0518	6668	6220	6073	5577	1132	4089	6615	7817
149	3005	6141	3449	7778	9822	2978	6583	6365	4640	9828
150	0515	2611	5698	1784	1272	6277	1186	6157	6562	0114

	0	1	2	3	4	5	6	7	8	9
151	3801	9094	3984	9662	7013	4675	3305	9477	6052	6463
152	5112	8493	3522	9082	1259	9393	1363	8384	9077	7256
153	6661	7321	5734	2238	7349	4913	2483	8800	2084	5533
154	9440	7478	8781	8877	0784	0963	6873	1825	1932	5033
155	5575	9490	3125	9746	8568	4724	1302	3744	5244	2820
156	5284	0256	6717	4189	4073	4327	3656	5039	4245	6650
157	9402	0218	7307	4515	6334	8394	3425	6806	3673	5666
158	3906	6392	1065	1416	8697	0728	7785	5091	3460	7425
159	2766	6735	3663	1802	1945	0226	2890	9448	7061	6863
160	0941	1822	4303	2196	5075	6276	2804	6772	7075	9958
161	9641	5726	2258	5528	1576	9655	1350	9548	4420	1533
162	8979	7285	9994	3207	6047	2331	8674	6722	4125	0510
163	1714	8090	1709	6994	1431	2278	2794	2976	6309	2646
164	4473	4405	2564	4567	3264	2473	8196	0385	5586	9738
165	5375	7532	1932	4760	9993	9806	9774	0254	5170	5947
166	4603	9646	8579	9149	1790	4482	1995	3069	0243	2391
167	8730	2372	0050	5351	0881	0813	7665	3128	1342	1692
168	2327	6572	9247	8958	3354	2747	5210	1817	6554	7970
169	8861	7298	6073	4138	6858	1097	2735	4934	3751	3858
170	6806	8850	7228	1330	8635	5597	1984	6638	0457	6876
171	8652	8362	1567	4844	5784	2737	9932	1684	8423	2794
172	6088	8885	2404	3769	3819	1362	7183	4445	7179	8671
173	1815	6022	9460	7823	8611	4410	7561	2609	0254	4294
174	3473	8945	0964	8240	6844	0396	3358	8447	7657	9587
175	4161	4157	7503	9125	8884	3890	8211	8391	2024	0696
176	3023	6708	3570	8685	3584	8230	4494	8788	1539	1088
177	5655	0644	5188	3485	6691	2698	5291	9690	3617	5423
178	8740	9861	2845	2286	6512	5913	4321	5439	4228	7904
179	1434	3335	3009	1410	9929	3214	2694	0530	6950	8837
180	1737	5691	9354	6787	2523	6040	3340	3542	1793	8388
181	0161	8195	9583	6276	0864	3568	4505	2997	2970	6221
182	9370	2850	5188	0492	0391	3796	2465	6420	2489	6883
183	3775	2928	8101	1313	6547	3748	3816	9558	0907	8016
184	6584	0790	2139	0854	2152	1231	4360	5694	8259	7658
185	4667	7582	2206	8373	2859	7140	3121	9352	6677	2725
186	6455	5130	1084	2872	4378	3176	7364	1393	1209	4810
187	0060	5586	6029	8412	9000	6808	0742	6397	4092	1542
188	6850	8675	7744	0269	2198	8756	1343	6312	8701	6551
189	2517	8132	4397	7633	4431	8702	8616	3250	0689	3254
190	1036	5789	6891	3343	0728	2997	0805	5021	4329	1727
191	9404	1396	6110	1404	4309	0810	5538	8437	6531	6233
192	7108	3253	6374	5536	6072	1705	0244	4504	4154	6666
193	0998	2139	0131	0188	1107	9274	3802	4429	7715	4470
194	1886	4751	0727	3940	8296	4045	8515	5907	8092	4462
195	0410	0317	6966	2726	0128	4489	9773	6389	8605	3374
196	5696	2690	8968	1055	1258	7378	0854	5822	9896	3157
197	4121	7845	1399	1548	5388	9814	5393	2307	2361	0736
198	2653	7554	3951	3033	4620	7119	9086	6337	5045	1744
199	9176	7228	0312	9807	0250	2529	3850	6094	3210	8576
200	7889	9222	3120	4810	8011	6547	0712	4644	2915	1757

	0	1	2	3	4	5	6	7	8	9
201	0160	2080	4447	0987	8028	0893	8971	4711	3498	3214
202	5154	3661	9389	4489	7934	9303	5863	3013	5960	5528
203	5870	7150	9710	7592	9833	8508	3822	2767	7342	6994
204	3100	6300	8049	4190	3168	3921	3590	0225	2444	8492
205	5721	0309	6235	4420	9760	7120	5067	3677	5445	0166
206	3352	3597	3545	8929	7566	0659	8025	7646	9962	3558
207	6012	7380	8185	6058	4767	5729	4316	9275	0165	7284
208	3073	6406	9675	6618	8058	4886	0622	1399	1322	1086
209	8960	3547	7335	4895	8266	8777	8528	6159	6862	4045
210	9122	3189	1137	8510	4541	6840	2240	3387	7152	0303
211	1459	3953	3028	1387	5810	0653	3473	3428	9380	2324
212	1746	0560	8354	7708	2285	0271	3940	5701	3009	2806
213	0002	5212	7917	1803	3365	8926	5320	2260	1558	3065
214	7182	3788	0033	3700	7801	5444	4538	1490	2168	6773
215	4667	3429	8106	3438	0475	2585	2001	5522	0656	3263
216	0497	1847	8938	3034	9088	0171	0268	2200	8611	1604
217	0507	6271	7963	5876	9848	6195	7756	7009	2988	7755
218	7712	8211	3476	8087	9668	8525	1300	4946	7825	5942
219	8367	6320	8873	1714	2606	5061	7947	5577	2369	9865
220	4797	4636	8743	7654	8582	4404	1427	3184	4330	0629
221	2723	7808	4212	2829	5409	5536	4273	8463	3195	4760
222	0735	1290	5356	2656	0184	7098	3047	3119	3717	9146
223	2403	5596	2312	9495	7795	4340	5345	9760	0604	6924
224	3159	9707	2005	5170	5385	2547	2543	6824	1799	8770
225	1520	1715	5788	6617	4883	4298	5045	8441	7470	4036
226	7108	6343	3412	2468	9933	5243	6088	7536	4596	3891
227	0791	8526	5671	7048	9002	0659	0712	4177	1228	1953
228	1780	9336	7203	4396	8396	4545	1135	4896	5366	0708
229	5516	3683	9549	4366	9107	4131	0201	2591	8025	9653
230	4461	4751	8082	6812	2137	6132	3883	6558	4226	8948
231	9626	8918	2457	8185	7717	5394	6638	2502	5582	1122
232	6756	7753	9709	1035	2772	7304	3299	6694	7537	6602
233	5407	0516	5724	7163	4100	5175	9404	1533	5711	8976
234	2672	7284	8051	4037	8002	1559	8356	6394	7363	7046
235	3992	8742	2106	8239	9159	3264	7613	9875	7878	7387
236	0941	1041	5118	2023	0290	2367	8715	9205	1938	5930
237	6365	6705	4441	2372	1088	2556	2213	0804	4489	7373
238	0058	8038	0108	2366	7422	3279	4601	9582	5242	6909
239	3417	7647	7349	7279	6742	3162	5055	0446	7634	3001
240	3909	5035	8407	3799	8675	1271	1819	6555	1005	6819
241	2772	9332	6565	2386	1611	2155	9020	3950	7153	5833
242	1877	7002	4835	9720	4422	1244	7862	4014	9350	1454
243	5350	9156	7710	3431	5303	5049	4557	2826	3733	2119
244	4392	1336	0343	1648	8757	7994	8513	1310	5117	0218
245	0620	6016	8767	1768	3029	5651	1550	9273	5604	0129
246	0385	6746	3438	2298	5509	6194	7003	5151	3174	8353
247	5154	0200	3042	9369	0554	9107	5780	9933	5404	1179
248	0892	7126	7857	8375	0529	3641	3036	2352	0648	6838
249	3004	0224	9766	8811	4449	0446	0423	4018	5293	5149
250	2137	9259	7064	9222	0414	6276	1801	6341	3821	2858

	0	1	2	3	4	5	6	7	8	9
251	8738	0126	5574	8727	9689	5310	8428	8939	3604	5463
252	8286	7025	0656	8101	3620	4040	6008	5988	4441	7366
253	5196	2398	3488	9799	5889	4995	9320	5810	2571	5018
254	8629	9583	2781	3710	3393	8053	2582	9954	7504	3172
255	1491	9040	7888	3142	0234	4314	6470	0272	6718	7455
256	6885	0882	3539	4555	9705	2851	0905	3691	3599	1263
257	2744	1556	6438	8433	1455	0961	2163	3205	6737	2458
258	7151	4750	6095	5337	0351	0195	3534	3551	9057	9258
259	0932	2673	3303	1271	0693	6085	5436	5071	8613	7754
260	3787	3647	2774	1479	0705	5762	9109	7973	0234	1627
261	5432	0890	5955	6306	0808	0595	5370	7828	9060	0900
262	4411	8675	9501	0470	3187	6746	9460	5219	6861	0252
263	2517	0941	1742	0320	1066	1632	3340	1779	1953	0403
264	9893	3022	3122	4194	2431	6441	1150	2419	0993	2814
265	4458	0712	8286	9156	0144	0853	2889	0752	2071	1967
266	2555	7714	6454	8424	2953	4083	5523	2402	5565	4877
267	9216	9051	0503	0948	3618	4645	9480	2773	3263	5260
268	8339	0418	0138	0621	7659	7614	7447	2702	8050	4418
269	0578	4867	2949	3278	9353	0528	6996	4985	7466	0562
270	1549	1857	8046	0828	6272	0429	3418	9482	6414	9865
271	6080	1044	7694	6380	2586	6890	0180	4510	5746	1061
272	5713	8882	2767	5543	4617	2028	7467	4201	4546	1038
273	1852	8853	3535	1588	3713	2645	5695	5920	3976	9559
274	9983	4276	6356	1430	6712	1960	0864	8141	1250	9109
275	2769	3262	9067	0222	5427	2138	0284	1652	8306	2801
276	0402	1540	1261	9724	7973	6497	1002	8296	8932	0561
277	2905	4816	1993	4133	0624	3722	7657	7018	5478	4947
278	8015	1002	2080	6152	6669	8702	9072	5154	5566	1960
279	8121	6009	2869	1354	3365	5494	4981	4995	9980	2596
280	5677	4328	8722	7179	6546	8694	9106	8683	4810	8793
281	5711	1090	2359	4469	9969	4643	0883	2827	0760	9017
282	8322	0249	3762	9962	7734	1456	9845	5780	3579	1940
283	2428	0148	6214	3472	8179	9928	7228	7385	4670	0145
284	4788	3796	8751	5801	7445	6592	6390	6925	3650	6391
285	1433	8831	7715	4040	9742	3589	3711	7050	4629	4769
286	4915	0972	1814	3753	3967	3774	4364	9655	7802	3470
287	5797	4758	0360	5646	8279	0078	9379	2050	5316	3735
288	1165	0540	1930	5730	2238	1212	5065	8288	1810	9952
289	1080	9746	9275	7872	2134	5756	6437	2613	8853	1388
290	9206	4169	5360	5897	8004	1263	1236	5349	0249	9954
291	7819	2316	2825	7552	2271	9595	5164	3306	5171	0588
292	8685	7689	9104	0477	0014	9977	0217	6092	8398	1493
293	5851	0869	0133	3025	9018	1154	4884	4605	8822	1712
294	8435	4257	7097	0086	4301	5930	4664	8767	0234	3160
295	1855	9220	1119	1450	2328	4328	3201	9835	0840	4623
296	4076	7372	7956	0744	0372	0902	4705	4243	3484	4177
297	2822	6671	0417	4235	8325	3187	8026	6820	6841	4386
298	2496	2711	2495	6289	7810	1554	3918	2795	3482	4791
299	5622	8509	4646	7790	3264	8837	7194	4731	6819	2442
300	4008	4838	2492	0135	9561	4802	1081	0023	2238	6158

	0	1	2	3	4	5	6	7	8	9
301	7971	9600	7771	8772	8435	2027	5803	0033	8970	4155
302	8916	5699	0591	8719	4498	2609	0459	7647	0320	1406
303	6942	5255	4686	8671	0435	8762	6161	7763	0228	9421
304	2294	8229	7456	2523	9850	4054	0943	5591	2951	4550
305	1645	0141	6784	7107	7772	4759	0825	7146	0683	6241
306	0949	7024	9174	7412	2993	5904	4995	5453	7312	1372
307	3293	0519	4628	7255	5641	3126	5726	2759	8034	7946
308	6061	4830	5023	1703	9558	2275	9429	2446	3771	1867
309	8269	1953	1720	7596	7750	4879	9931	6103	0351	7966
310	3898	6464	1927	8613	1479	7301	5411	3028	9727	2956
311	1216	5466	2732	1629	7795	3961	0034	0275	8634	7286
312	1932	4667	6220	3122	8644	2691	3519	4722	8363	9069
313	6282	3202	1882	6210	3919	5503	3479	0715	1592	4739
314	9945	4743	0529	0479	5508	4757	2391	6105	7648	8866
315	4640	1838	4422	5173	2505	3431	0148	7781	4495	9296
316	7556	2059	5748	6791	6495	1305	6639	4561	2675	4285
317	9486	8085	6798	4929	7497	8939	1496	1278	4137	3868
318	4833	2442	3674	6391	2363	9950	9302	1287	3896	1341
319	2327	4580	3942	0111	9792	6565	9369	6582	6979	4906
320	8863	7379	8320	4208	2733	7322	6314	4918	2082	6269
321	9973	0331	0667	3872	2031	8732	6123	8979	9625	1717
322	3339	0207	1905	5488	0284	6400	1988	6052	4194	5108
323	8389	2826	7292	3980	3218	4038	8662	3648	2386	9707
324	3180	7799	3047	5571	3707	2169	3793	4893	9386	5076
325	8191	0589	5106	7833	7842	8730	6251	0164	8707	7143
326	5253	0006	4530	8929	7185	0777	5710	9929	4266	3976
327	6528	8627	8978	7845	0664	6075	8496	3007	3578	0054
328	7664	6718	2538	9486	5703	7120	8521	3092	5061	6758
329	2582	6415	0185	1376	1930	0611	5333	0381	0880	5173
330	1136	9939	4940	4262	4442	0616	1642	3711	6661	5900
331	7513	7500	7655	4979	0730	8292	4986	7596	3652	8795
332	3446	3239	5826	8234	9200	1745	5635	7985	9250	5137
333	5455	3963	9270	7772	2076	6947	1196	3554	4870	9012
334	5924	9407	5714	2668	3667	6455	3736	8000	0996	6479
335	2062	0663	9732	7210	7176	0600	2711	8263	8836	0248
336	6634	8562	4390	9896	5874	8468	5407	2706	5132	3233
337	5243	5667	4099	1093	8198	0419	3648	5472	3009	6040
338	9597	7559	7021	5907	2099	4749	8298	9985	4888	0488
339	7760	2517	3740	1071	9069	0307	5007	6464	8696	7642
340	8368	7543	9761	8222	6295	1429	8476	0702	5817	2201
341	2369	6985	1520	0657	5866	0305	8556	2679	4856	4545
342	1448	7833	1185	7564	2764	3037	4394	4471	3569	8648
343	2818	8346	2583	1128	2617	3164	5323	8621	7900	5153
344	9695	5029	4842	1958	0011	1191	8417	3693	0577	8155
345	9332	6231	6059	4504	5868	0919	8981	0255	5019	0132
346	9973	3782	2950	5578	6946	5306	0573	7584	4650	0914
347	1079	9960	5463	8782	3807	5847	1143	4970	9450	6702
348	1996	2975	2548	8115	5636	6783	2446	2212	8888	6953
349	6143	3506	0304	7631	5600	5362	5023	4429	7326	4962
350	1881	1015	7634	1233	0344	7387	0618	5230	6089	1658

	0	1	2	3	4	5	6	7	8	9
351	2474	2846	2138	5148	5456	1827	9249	8511	0456	6711
352	4891	7097	6509	4975	1459	6666	6905	3446	6806	4006
353	0681	8014	6654	3268	2308	4404	8269	3880	1971	2340
354	8057	0244	6347	7837	9492	2710	8695	0157	8189	3298
355	6464	4582	6471	4256	9834	8259	5265	3994	9955	1857
356	8676	0217	6172	6026	2868	1308	4572	1540	8804	3022
357	7846	3762	1800	9549	8226	8940	8827	0862	1348	9595
358	5626	3873	6843	8420	6150	6098	1083	3060	4812	6298
359	9845	0138	1001	8645	0162	5240	6390	2301	7392	6690
360	9353	3771	5724	1013	5155	5456	1138	8420	1786	6626
361	6935	8841	1406	5737	8874	6992	5836	6368	0409	8243
362	0104	7282	8203	1156	6698	0060	2171	2400	7803	3631
363	5035	3811	5070	6267	6210	1465	2385	3399	1286	7238
364	9862	2735	5941	1736	3534	0971	5609	3581	2044	7319
365	0225	7328	1950	1095	8808	4012	6196	9592	7294	9312
366	7538	7869	0825	5632	6534	5707	5876	6540	4431	1354
367	9848	3955	0524	8485	0471	7074	5687	3348	9644	6513
368	8352	2284	5922	1596	4777	0526	4480	5497	5321	6962
369	6165	0280	8626	6560	6573	8171	2403	1660	8348	0153
370	0434	1242	8901	0752	4918	6366	8283	9303	5193	9159
371	4811	9244	4548	0196	2696	3400	2953	4985	3480	8546
372	0577	9457	2264	3497	2752	5823	5782	3961	8965	7713
373	1290	5220	7325	4913	0769	6142	2579	9710	1406	1196
374	8753	2693	7801	8681	2428	9102	6276	7679	1295	5501
375	1837	0731	4801	8869	2053	3620	4074	8615	5519	8346
376	3445	2093	5420	9643	7743	9290	3672	3090	7199	5490
377	6756	9995	9813	8272	4085	7116	6738	5947	1378	0111
378	2686	1974	4635	5511	0123	8896	2424	4066	7619	7305
379	9794	0151	2672	8724	6101	8873	5479	3676	3860	3475
380	4695	4339	2138	8908	7220	5788	1324	9837	8447	2175
381	1747	7440	8716	6254	0012	6060	5348	7185	5750	4662
382	1886	5166	7379	5530	8367	9896	2266	4165	8824	9835
383	1349	0670	0860	9406	8648	5621	8679	2194	3603	5648
384	2797	2535	1992	1905	0009	0033	4927	6876	0742	2964
385	3128	0069	2354	2819	4161	7102	2964	0416	2039	2529
386	1412	8649	0922	3149	3872	7622	9557	8675	0588	0191
387	2729	8481	1359	6697	3619	1353	7129	9649	1809	2201
388	2314	4349	4646	6545	3947	1674	4343	2835	2779	7938
389	4132	8683	4436	5899	0690	6158	6727	6992	4698	2044
390	4446	9426	3046	9184	0839	1683	1638	0381	9034	7293
391	6528	3645	6113	5319	4499	3842	2293	7107	7186	1688
392	3669	1878	2310	3170	1473	5727	8861	7295	1091	9753
393	9248	4854	1800	4241	6937	1053	4814	1170	0575	2612
394	1911	3848	4153	9481	1670	5639	2993	7943	3589	4976
395	6284	3306	7926	7823	0740	0951	6620	7050	8092	8800
396	7668	5957	9100	2999	9574	2412	7182	4656	9566	7086
397	0474	0478	5909	3983	2785	6208	5172	4475	0281	4669
398	8195	1115	3544	1547	4574	2611	7372	6316	9498	2554
399	1147	4374	0906	7740	7090	4901	7056	9893	7207	7998
400	4852	8998	8520	1484	9872	7766	3586	4545	4610	4880

	0	1	2	3	4	5	6	7	8	9
401	5903	2815	5600	3726	1747	2955	1887	2011	7023	2262
402	3919	7784	5844	9245	3032	0608	9045	6136	6952	8731
403	9503	3716	3501	0070	8298	1316	4132	4493	1861	0291
404	1086	1533	8345	5845	8600	4197	5063	1374	4890	9987
405	5996	8476	1614	5369	4138	6956	4761	7831	6253	5064
406	8436	0235	4916	7933	9734	4990	8029	6291	6313	7833
407	9786	0111	7147	9737	5904	9592	1918	3297	6639	8205
408	3818	9483	1180	3180	1560	9700	2598	6046	0978	9764
409	2080	2054	4466	3751	7813	0263	1414	4956	3837	4371
410	4294	3586	6006	3516	8383	9750	7403	8479	6064	6365
411	5412	0398	8619	7465	0449	3417	3759	1558	2947	8310
412	6177	7183	9247	4137	5425	4237	8035	4045	0093	2706
413	3381	3433	5711	5851	2136	0809	9689	4387	7166	6189
414	7027	2221	3889	9224	0597	3938	0041	6989	3954	3096
415	1136	3027	1515	2864	6250	5302	9795	5258	7223	8749
416	6343	3439	1807	0720	2440	2421	1456	2590	4164	9753
417	2124	6593	1687	9250	2937	5882	8580	3502	1821	7647
418	9325	4010	7456	2642	0180	9342	1220	9180	4981	4833
419	2340	2698	8789	1934	9747	7965	4748	4876	7761	3657
420	8104	0685	7177	4315	9974	4043	5756	2395	4274	7237
421	0853	8104	7012	6149	7514	7766	3877	7970	3408	8541
422	4592	1909	8828	0411	1621	2734	3756	0381	0688	7771
423	9309	2879	5269	0957	6308	0144	6880	7062	9329	5785
424	1421	6802	5710	3728	7241	8441	0393	4421	0624	1559
425	7599	8835	2748	5413	1506	5048	6173	0059	5326	4605
426	1801	9449	0797	3895	8311	0289	4797	1398	8431	1286
427	3294	9090	8380	5944	6006	1522	2214	0292	6575	3530
428	3445	2270	3259	7507	4084	7868	5625	1212	8575	3991
429	1022	0982	6854	1429	3931	6639	9170	1290	8998	8304
430	1019	2949	3740	2736	0035	9443	2872	5922	9422	4088
431	3259	0725	4998	6694	2155	6976	0381	6600	2252	2088
432	9556	6103	8231	6413	4297	2694	2367	9508	3610	4606
433	2916	3812	8645	8275	7166	8914	4340	8743	8870	1759
434	1634	3824	5008	4400	7670	7111	0210	6252	6571	4695
435	9727	1073	8076	9090	9802	9161	1969	4320	8970	4953
436	8288	1981	1202	5977	4534	1534	0361	8131	9021	1074
437	1991	0425	1232	0507	9400	3951	1574	6427	4018	0565
438	6855	9445	8507	2710	7031	3891	4395	4966	6465	0254
439	3829	3090	2294	5862	8456	0838	4262	2207	9315	1708
440	0687	0834	7690	5627	8793	9704	8979	3715	7620	1140
441	1192	6075	3222	8556	6901	0933	4516	0926	4335	4495
442	0828	8628	5557	4267	8715	4172	0999	3878	2273	7895
443	8506	4635	9763	3061	1415	1827	2584	3268	0820	6347
444	3664	7739	5915	6699	1254	5051	2199	9780	8256	9094
445	5207	0281	3380	4663	3723	3713	6068	7919	4572	3562
446	4758	3038	9066	6631	2989	0399	5011	3155	4363	5134
447	2948	2150	5274	2619	0872	4823	3397	9551	3514	0578
448	2916	6211	7975	3521	0002	8336	3572	4460	8194	4152
449	4074	8791	1711	9092	1662	1968	5890	8876	7886	8459
450	5522	0630	9099	9412	1987	2213	0365	0857	7059	5607

	0	1	2	3	4	5	6	7	8	9
451	2818	1644	4095	6517	7888	7497	2504	8517	4795	9180
452	4008	2178	9797	2511	0230	3206	4609	9199	9555	4257
453	9270	6757	3094	1902	9576	4245	1907	3537	5024	2212
454	4283	0575	9216	8849	2046	6433	4348	4006	5419	7348
455	1995	9490	1002	4583	1903	0695	9105	6675	9853	8560
456	7486	7617	4960	5009	9875	4046	2463	5190	0337	1009
457	6740	4125	1009	3464	5270	4471	9111	2489	0515	1710
458	2040	3384	2173	7430	7710	9138	9836	4218	4788	6353
459	7800	5776	7489	6166	9933	7387	1823	5741	7063	9422
460	5452	1798	7818	3843	3198	4116	9760	7388	4983	6146
461	2200	9082	1932	0727	4111	2410	7424	8087	4815	1699
462	1380	8104	6786	8552	3552	1648	4648	9452	5785	1241
463	8680	4358	2373	2783	4619	2527	0836	6785	0440	6401
464	1442	8608	9787	4313	9567	5835	5847	9018	8906	3386
465	6968	6542	4931	0323	0554	8831	8249	0884	9401	6952
466	7017	6936	0751	5273	9485	4538	3094	9626	9738	9804
467	7916	6025	2082	4194	9689	4313	8267	3151	2120	9043
468	4313	3979	1380	2564	0454	7942	7243	1338	7826	9340
469	2089	8835	2164	5938	8577	0985	0234	2946	2419	5892
470	0110	8951	0140	6090	1500	7194	0908	5051	5922	7749
471	1634	2255	6261	4023	9225	8815	4309	3774	2946	2517
472	5586	2457	2063	8645	0523	6201	7859	8115	0258	5695
473	0104	3562	6376	0844	7930	8418	9693	5009	9286	4414
474	2735	6851	1541	6615	8432	4800	7595	4895	8951	2809
475	4918	5473	2964	7280	2406	3790	3510	2381	5010	6320
476	4472	6105	3805	3445	8048	1078	8687	7530	4655	9307
477	7816	2237	8693	7775	7897	6151	9126	4346	5236	7570
478	4887	4977	7314	2769	2370	9663	9521	7514	5813	9469
479	1139	7560	1276	5646	3261	8693	3199	6530	2934	0526
480	3444	8169	7650	6183	5108	4653	5072	3348	3792	5971
481	8104	6577	1738	8790	4278	4361	0730	1096	4115	5109
482	2371	2964	2888	3142	9540	2366	0706	1236	0671	1067
483	0999	1401	4609	0833	8450	5466	3812	2756	7902	0033
484	7795	3205	8089	6436	9586	4275	2515	7261	0958	0312
485	4848	3403	1042	3406	0964	5409	5612	8689	6122	7344
486	9440	0676	9834	6449	4216	9188	6150	8022	3893	8890
487	7111	1014	8160	5340	3426	0695	1038	3751	4974	1411
488	8938	4688	2284	0285	4845	8425	4891	2736	7926	3523
489	6950	5210	1565	0431	9641	4016	4505	2629	0111	4095
490	4622	6658	6572	3213	6579	5854	9445	2878	3584	2564
491	6744	0048	1861	2664	0433	4286	8231	6419	5599	9079
492	5695	8530	1924	6177	8870	4822	9070	6201	6412	7507
493	6966	3987	6009	2936	4683	1084	9613	7013	6260	2609
494	7066	8247	9253	8223	0395	5403	2097	7574	5642	0500
495	9895	7280	6024	4505	0338	0706	8514	0659	5178	4059
496	3081	0287	4712	5215	7088	7707	0787	7815	7176	7655
497	2725	3254	8246	4645	9448	7622	0063	9307	9870	2843
498	7315	0408	0976	3714	3932	9194	6425	6438	0639	0028
499	5270	0138	2015	7250	0504	5008	2431	8394	1859	7517
500	6729	4405	0043	5901	9227	5824	5584	1345	9856	2515

References

ASTM Manual, D-3665 Standard Practice for Random Sampling of Construction Materials, Volume 04.03.

"Basic Asphalt Recycling Manual", Asphalt Recycling & Reclaiming Association, F.H.W.A., 2001.

"HS-5001 EZ Moisture-Density Gauge Product Manual User Guide" Humboldt Scientific, Inc., 2012.

"Manual of Operation and Instructions 3430 Series Surface Moisture-Density Gauge" Troxler Electronics Laboratories, Inc., 2001.

"Manual of Operation and Instructions 3440 Series Surface Moisture-Density Gauge" Troxler Electronics Laboratories, Inc., 2001.

"Manual of Operation and Instructions 3450 Series Surface Moisture-Density Gauge" Troxler Electronics Laboratories, Inc., 2002.