STATE OF
NORTH CAROLINA
DEPT. OF TRANSPORTATION
DIVISION OF HIGHWAYS
RALEIGH, N.C.

7-06

ENGLISH STANDARD DRAWING FOR

EARTH BERM MEDIAN PIER PROTECTION

SHEET 1 OF 2

225.08

LEGEND

PAVED SHOULDER

4" CONCRETE SLOPE PROTECTION

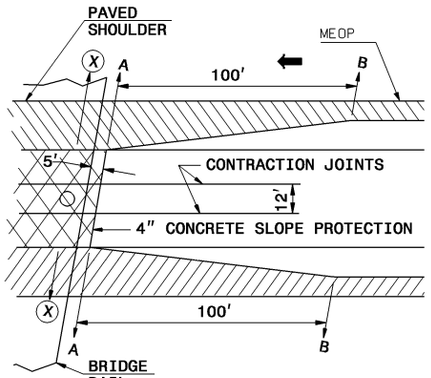

SKEW PLAN

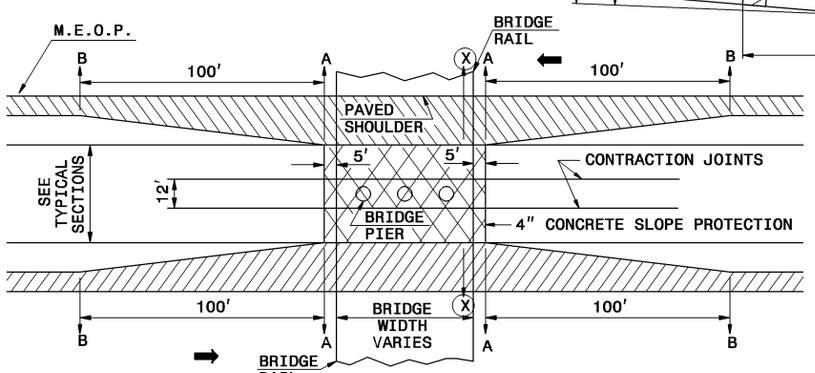

PLAN

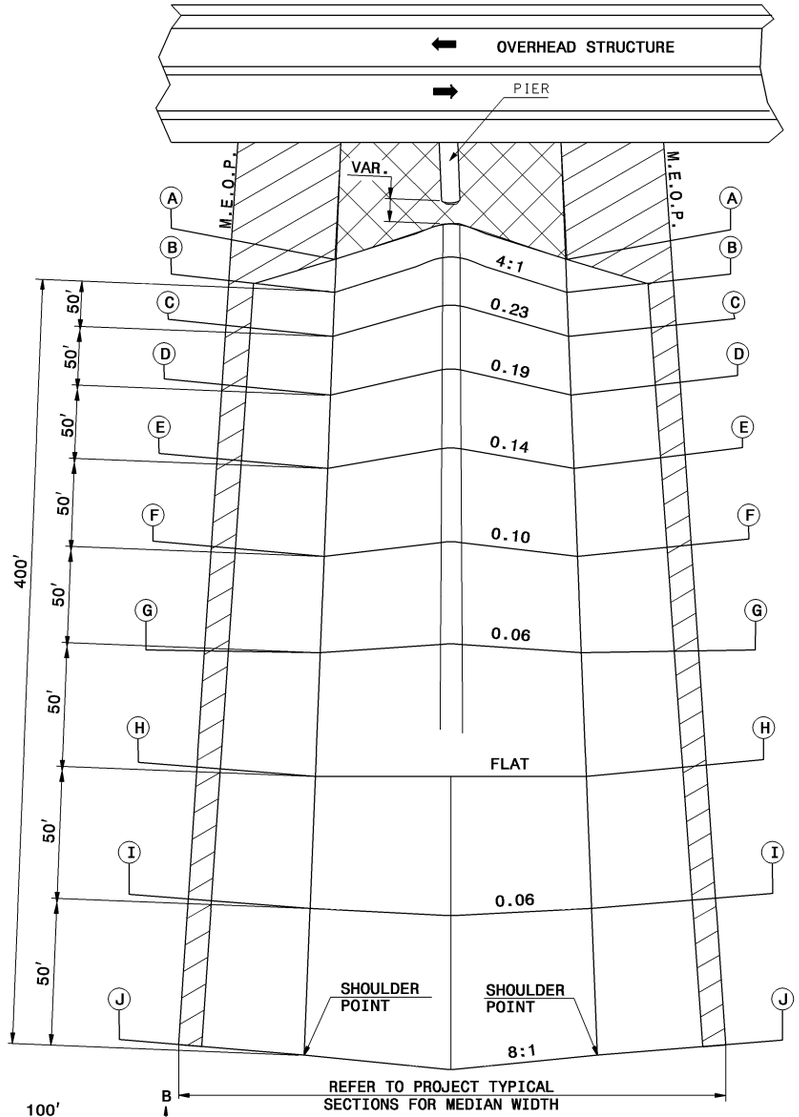

PERSPECTIVE

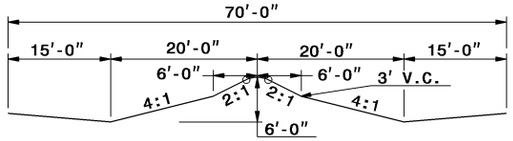

SECTION A-A & B-B

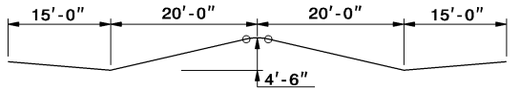

SECTION C-C

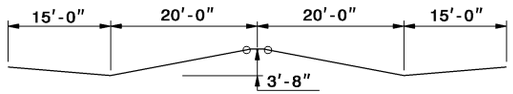

SECTION D-D

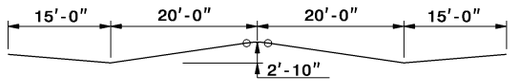

SECTION E-E

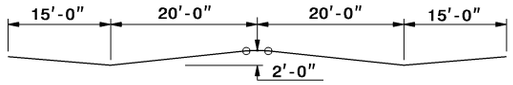

SECTION F-F

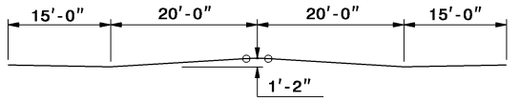

SECTION G-G

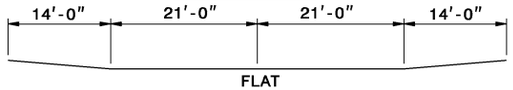

SECTION H-H

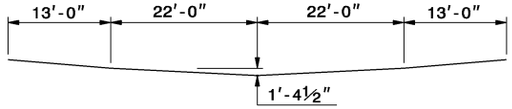

SECTION I-I

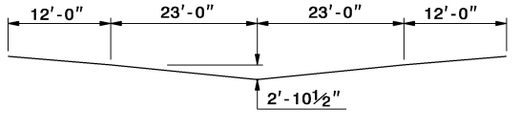

SECTION J-J

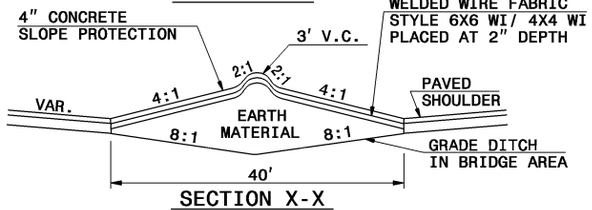

SECTION X-X

STATE OF
NORTH CAROLINA
DEPT. OF TRANSPORTATION
DIVISION OF HIGHWAYS
RALEIGH, N.C.

7-06

ENGLISH STANDARD DRAWING FOR

EARTH BERM MEDIAN PIER PROTECTION

SHEET 1 OF 2

225.08