STATE OF
NORTH CAROLINA
DEPT. OF TRANSPORTATION
DIVISION OF HIGHWAYS
RALEIGH, N.C.

7-06

ENGLISH STANDARD DRAWING FOR

CROSS PIPE END SECTION

PREFABRICATED STEEL SECTION FOR 18″ TO 30″ PIPE

SHEET 1 OF 1

310.05

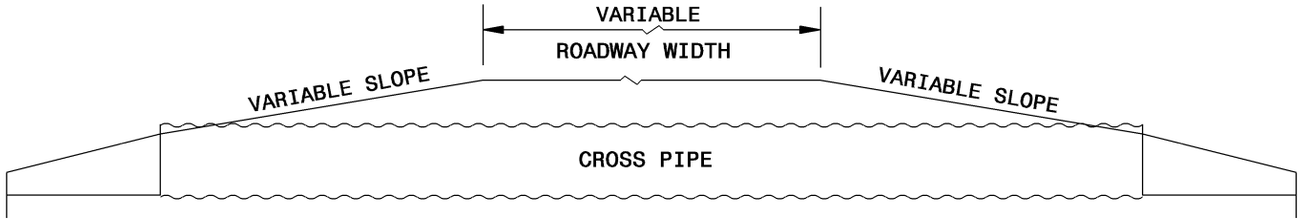

ROADWAY CROSS PIPE TYPICAL SECTION

END TREATMENT DIMENSIONS			
D	L	W	THICK. GAGE
18″	2′-8″	2′-0″	16 MIN.
24″	4′-8″	2′-6″	16 MIN.
30″	6′-8″	3′-0″	16 MIN.

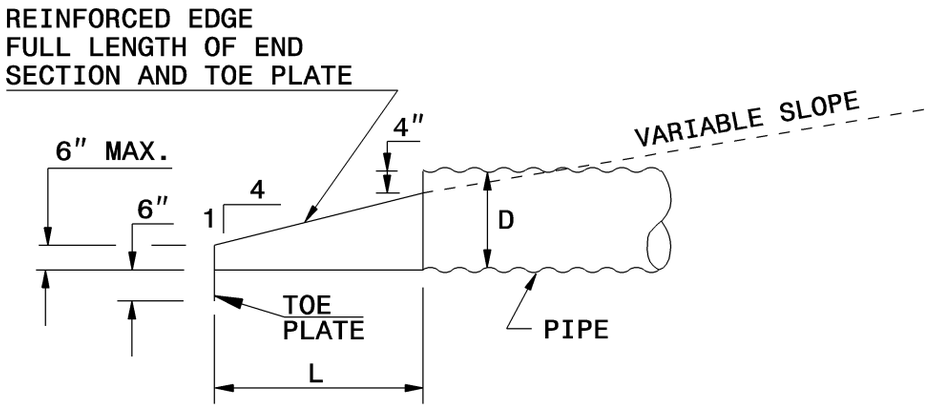

SIDE VIEW

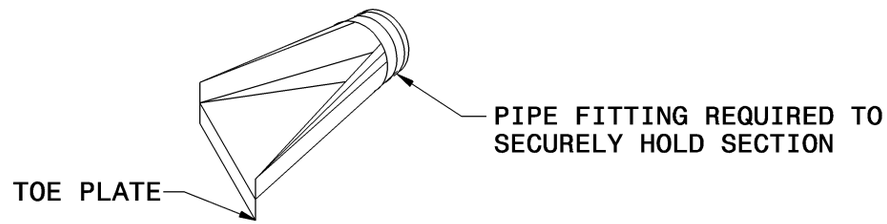

ISOMETRIC VIEW

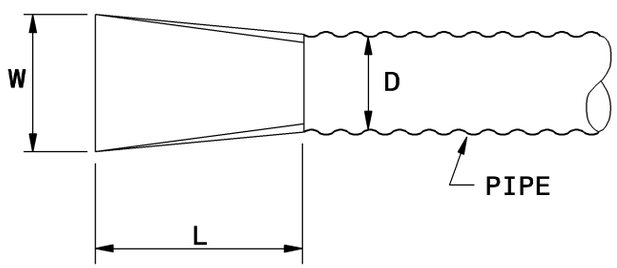

PLAN VIEW

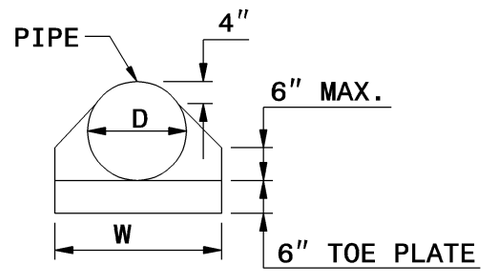

END VIEW

NOTE:
PREFABRICATED STEEL END SECTION AND ALL PARTS WILL MEET THE REQUIREMENTS OF AASHTO M-218.

STEEL END SECTION

STATE OF
NORTH CAROLINA
DEPT. OF TRANSPORTATION
DIVISION OF HIGHWAYS
RALEIGH, N.C.

7-06

ENGLISH STANDARD DRAWING FOR

CROSS PIPE END SECTION

PREFABRICATED STEEL SECTION FOR 18″ TO 30″ PIPE

SHEET 1 OF 1

310.05