STATE OF
NORTH CAROLINA
DEPT. OF TRANSPORTATION
DIVISION OF HIGHWAYS
RALEIGH, N.C.

7-06

ENGLISH STANDARD DRAWING FOR

REINFORCED BRIDGE APPROACH FILLS

PRESTRESSED AND PLATE GIRDER BRIDGES
15′ MINIMUM APPROACH SLAB

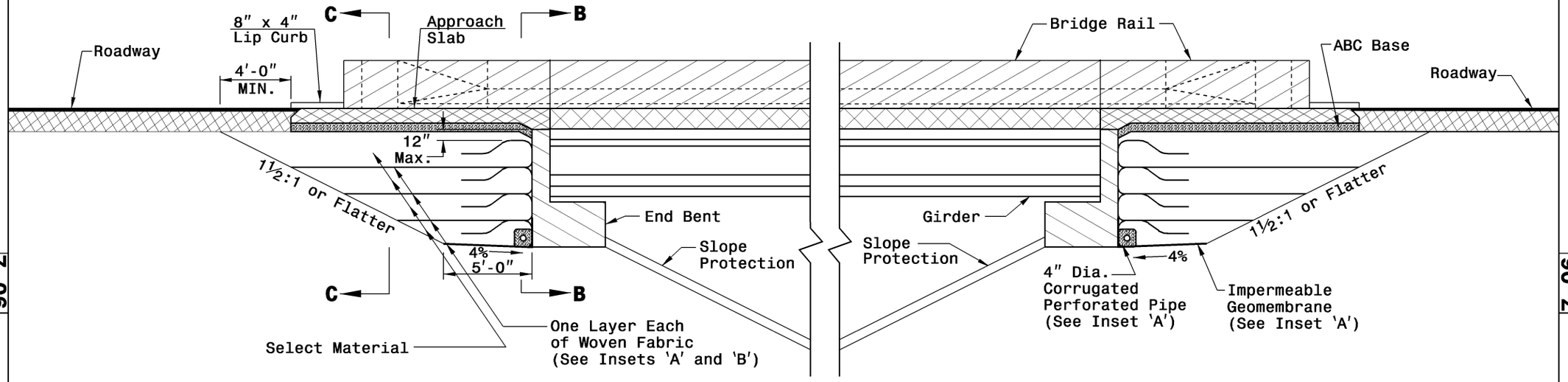

SECTION A-A

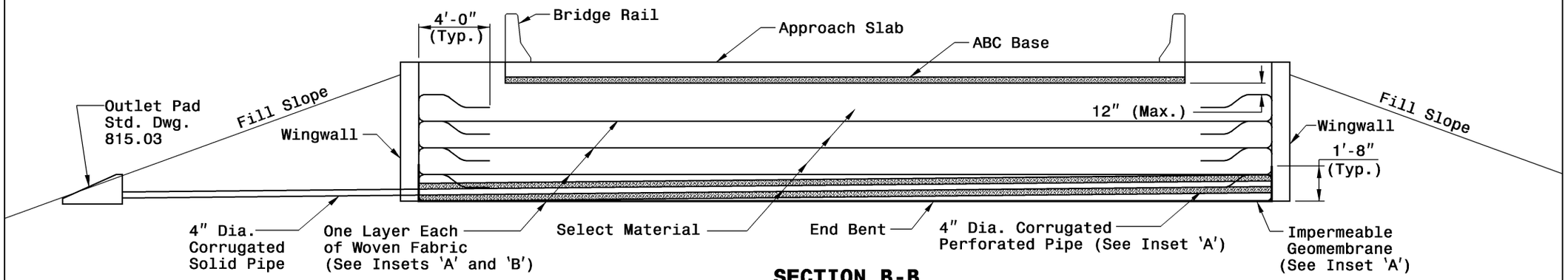

SECTION B-B

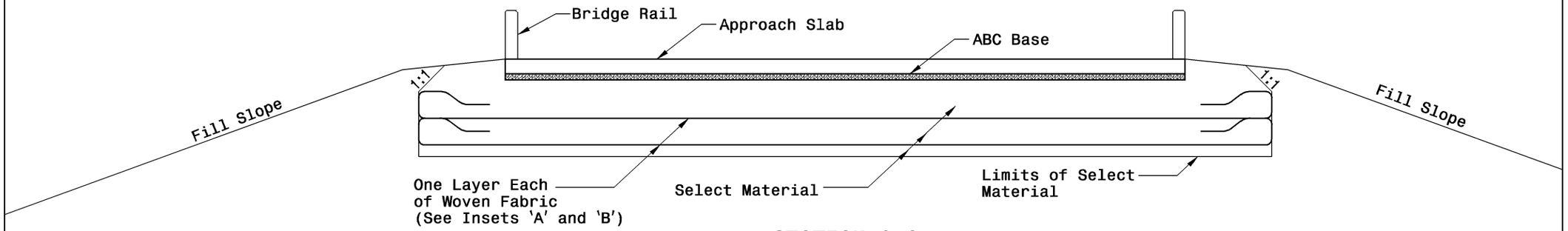

SECTION C-C

15′ MINIMUM APPROACH SLAB

SHEET 2 OF 7

422.10

STATE OF
NORTH CAROLINA
DEPT. OF TRANSPORTATION
DIVISION OF HIGHWAYS
RALEIGH, N.C.

7-06

ENGLISH STANDARD DRAWING FOR

REINFORCED BRIDGE APPROACH FILLS

PRESTRESSED AND PLATE GIRDER BRIDGES
15′ MINIMUM APPROACH SLAB

SHEET 2 OF 7

422.10