STATE OF
NORTH CAROLINA
DEPT. OF TRANSPORTATION
DIVISION OF HIGHWAYS
RALEIGH, N.C.

7-06

ENGLISH STANDARD DRAWING FOR

CONCRETE SHOULDERS
STAMPED OR ROLLED RUMBLE STRIPS

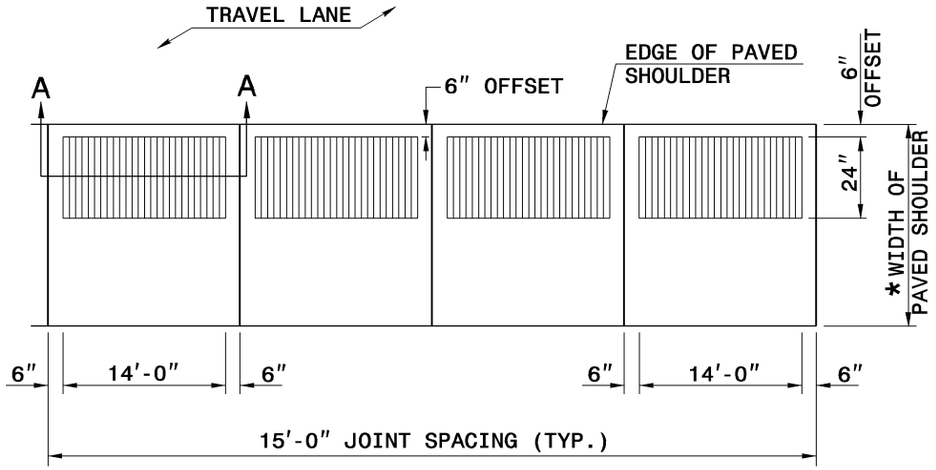

PLAN VIEW
PAVED SHOULDER

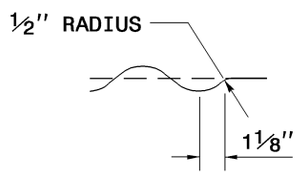

INSET "A"

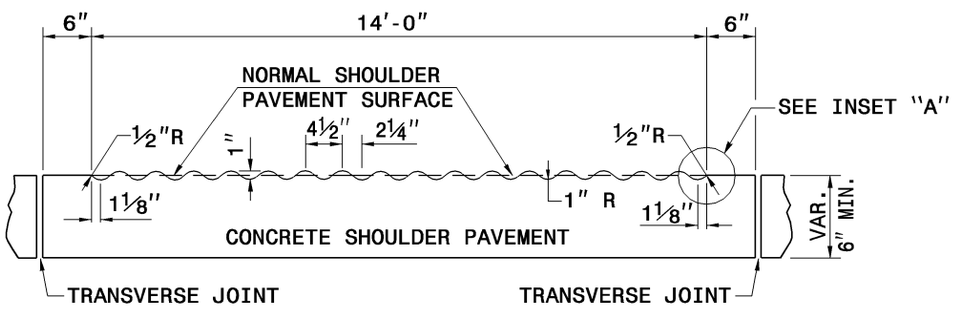

SECTION A-A
DETAILS FOR RUMBLE STRIP

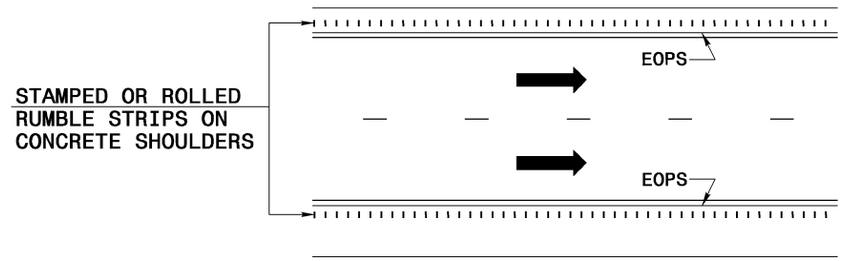

LANE TREATMENT

* FOR WIDTHS SEE TYPICAL SECTIONS, PLAN SHEETS, AND INTERCHANGE DETAILS.

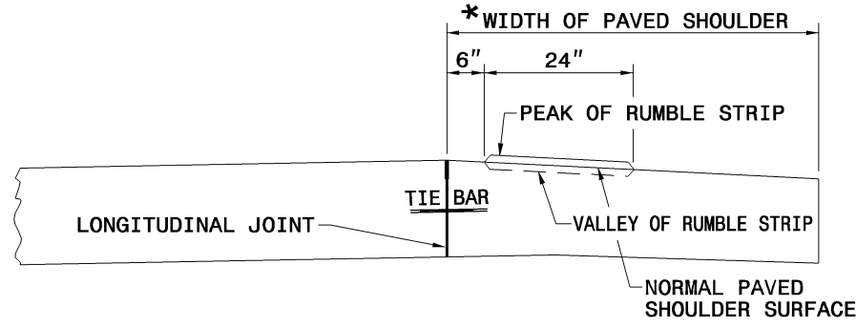

SECTION DETAILS SHOWING
PEAK AND VALLEY OF RUMBLE STRIP

NOTES:

1. MATCH CONCRETE SHOULDER TRANSVERSE JOINTS TO THAT OF THE ADJACENT CONCRETE PAVEMENT.
2. SAW AND SEAL THE LONGITUDINAL JOINT AND TRANSVERSE JOINTS. SEE STD. DWG. 700.01 FOR DETAILS.
3. SEE DETAIL SHOWING "METHOD OF CONCRETE SHOULDER CONSTRUCTION" FOR PAVEMENT SLOPES.

STATE OF
NORTH CAROLINA
DEPT. OF TRANSPORTATION
DIVISION OF HIGHWAYS
RALEIGH, N.C.

7-06

ENGLISH STANDARD DRAWING FOR
CONCRETE SHOULDERS
STAMPED OR ROLLED RUMBLE STRIPS

SHEET 1 OF 3
720.01