STATE OF
NORTH CAROLINA
DEPT. OF TRANSPORTATION
DIVISION OF HIGHWAYS
RALEIGH, N.C.

7-06

ENGLISH STANDARD DRAWING FOR

CONCRETE PADS

FOR SHOULDER DRAIN INSTALLATION

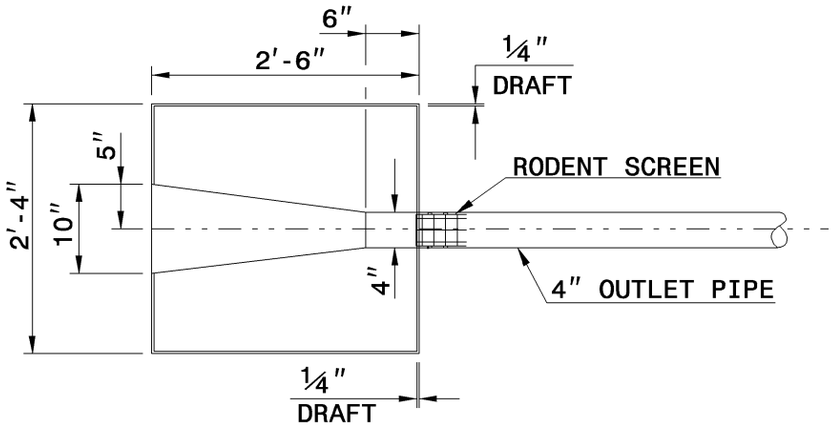

PLAN VIEW

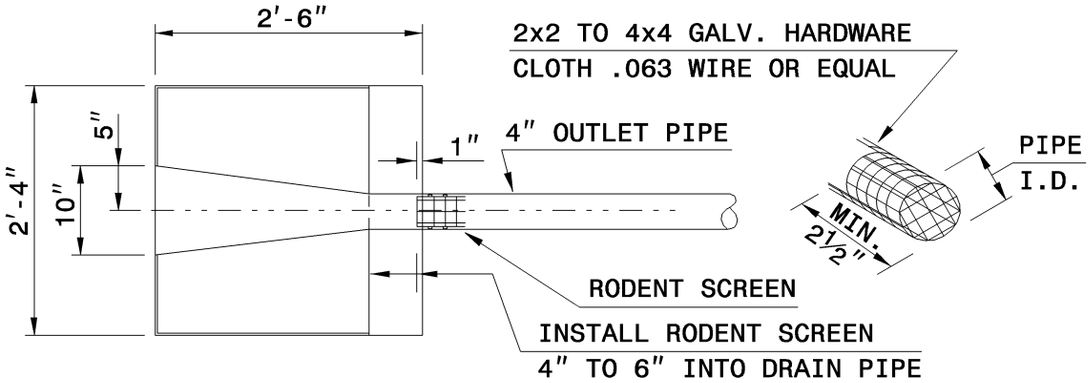

TOP VIEW

PARTIAL DETAIL OF RODENT SCREEN

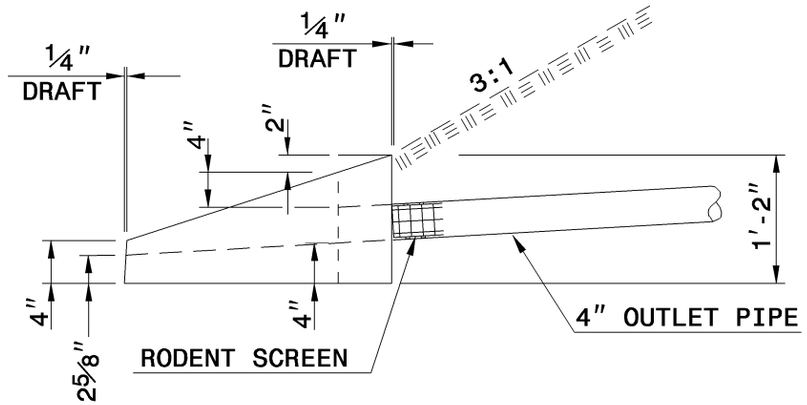

ELEVATION VIEW

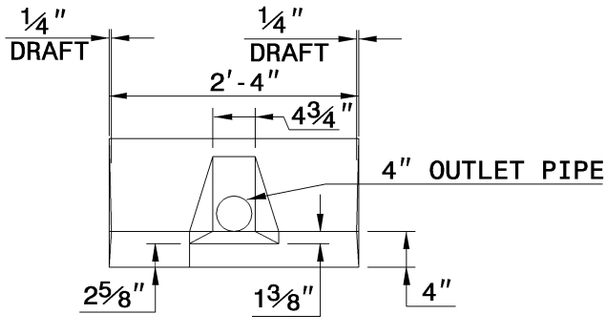

END ELEVATION VIEW

THE CONCRETE PAD CONSISTS OF 0.137 CUBIC YARDS OF CLASS "B" CONCRETE.

STATE OF
NORTH CAROLINA
DEPT. OF TRANSPORTATION
DIVISION OF HIGHWAYS
RALEIGH, N.C.

7-06

ENGLISH STANDARD DRAWING FOR

CONCRETE PADS

FOR SHOULDER DRAIN INSTALLATION

SHEET 1 OF 1
816.01