STATE OF
NORTH CAROLINA
DEPT. OF TRANSPORTATION
DIVISION OF HIGHWAYS
RALEIGH, N.C.

7-06

ENGLISH STANDARD DRAWING FOR

CONCRETE ENDWALL FOR SINGLE AND DOUBLE PIPE CULVERTS

15″ THRU 48″ PIPE - 90° SKEW

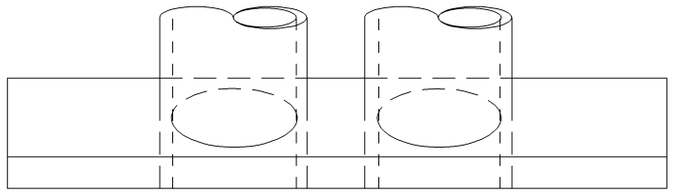

PLAN

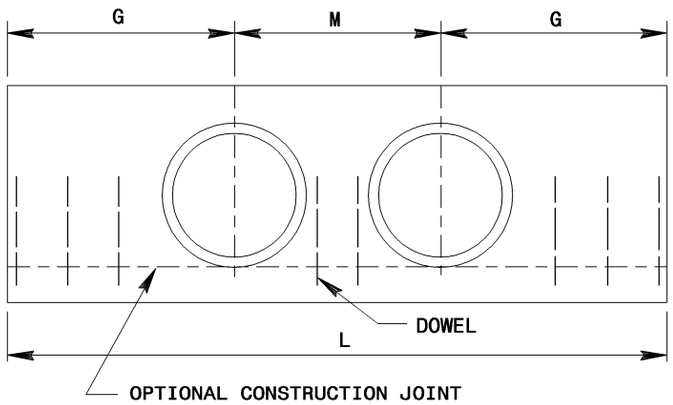

ELEVATION

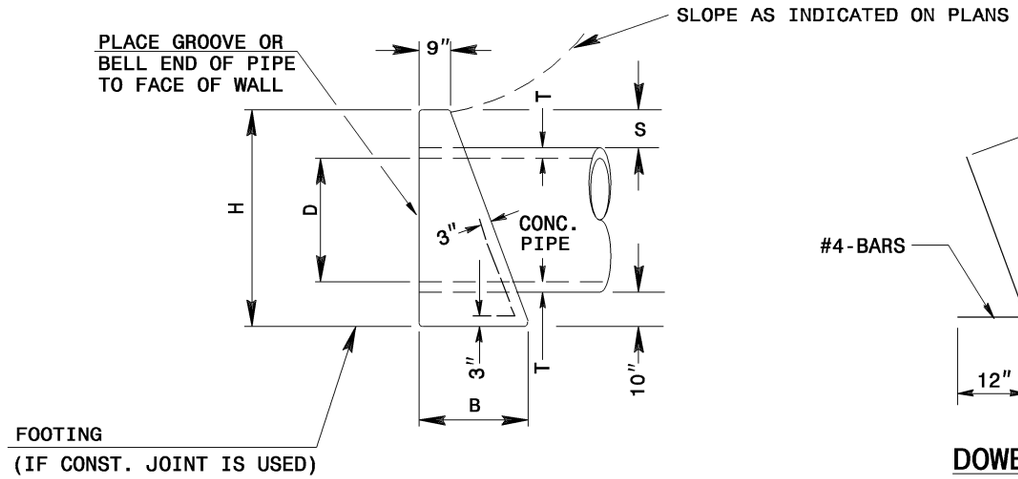

END ELEVATION

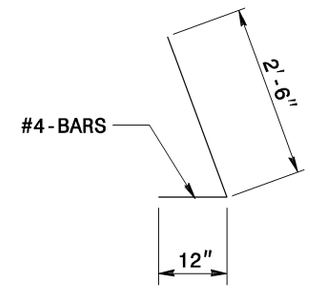

DOWEL

BAR-″X″

DOWELS IN ENDWALL WITH REINFORCED CONCRETE PIPE																				
LOC.	PIPE	SINGLE PIPE									DOUBLE PIPE									
	DIA.	15″	18″	24″	30″	36″	42″		48″		15″	18″	24″	30″	36″	42″		48″		
	BARS	″X″	″X″	″X″	″X″	″X″	″X″	Y*	″X″	Y*	″X″	″X″	″X″	″X″	″X″	″X″	Y*	″X″	Y*	
G	QTY.	2	2	3	3	4	4		5		2	2	3	3	4	4		5		
M	QTY.	-	-	-	-	-	-	2	-	2	1	1	2	2	2	2	2	3	2	
G	QTY.	2	2	3	3	4	4		5		2	2	3	3	4	4		5		
TOTAL LBS.		9	9	14	14	19	55		65		12	12	19	19	23	77		92		

DIMENSIONS AND CONCRETE QUANTITIES										
USING CONCRETE PIPE										
	COMMON DIMENSIONS					SINGLE PIPE		DOUBLE PIPE		
D	H	B	G	T	S	L	YD^3	M	L	YD^3
15″	3′-3″	1′-8″	2′-9″	2¼″	9½″	5′-6″	0.7	2′-2″	7′-8″	1.0
18″	3′-7″	1′-10″	3′-2″	2½″	10″	6′-4″	1.0	2′-7″	8′-11″	1.3
24″	4′-2″	2′-1″	4′-0″	3″	10″	8′-0″	1.5	3′-5″	11′-5″	2.0
30″	5′-0″	2′-6″	4′-7″	4¼″	11½″	9′-2″	2.3	4′-3″	13′-5″	3.1
36″	5′-8″	2′-8″	5′-6″	4¾″	11½″	11′-0″	3.4	5′-0″	16′-0″	4.5
42″	6′-2″	3′-1″	6′-4″	5¼″	11½″	12′-8″	4.5	5′-10″	18′-6″	6.0
48″	6′-9″	3′-5″	7′-2″	5¾″	11½″	14′-4″	6.0	6′-8″	21′-0″	8.0

*SEE SHEET 3

STATE OF
NORTH CAROLINA
DEPT. OF TRANSPORTATION
DIVISION OF HIGHWAYS
RALEIGH, N.C.

7-06

ENGLISH STANDARD DRAWING FOR
CONCRETE ENDWALL FOR SINGLE AND DOUBLE PIPE CULVERTS
15″ THRU 48″ PIPE - 90° SKEW

SHEET 1 OF 3
838.01