STATE OF
NORTH CAROLINA
DEPT. OF TRANSPORTATION
DIVISION OF HIGHWAYS
RALEIGH, N.C.

7-06

ENGLISH STANDARD DRAWING FOR

BRICK "L" ENDWALL FOR SINGLE PIPE CULVERTS

15" THRU 48" PIPE

SHEET 1 OF 1

838.15

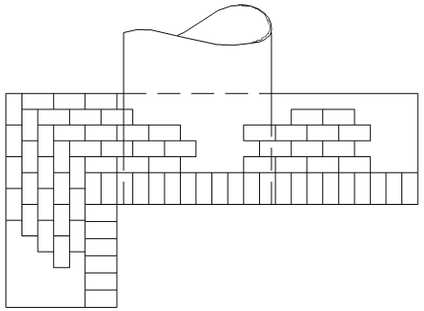

PLAN

GENERAL NOTES:

-ALL MORTAR JOINTS ARE ½" ± ⅛".

-BOND BRICKWORK WITH FULL HEADERS EVERY THREE COURSES.

-CONCAVE TOOL ALL EXPOSED JOINTS.

-DO NOT INTERPRET WALL THICKNESS (T) SHOWN AS THE THICKNESS ACCEPTABLE, BUT IS USED ONLY IN COMPUTING ENDWALL DIMENSIONS AND QUANTITIES.

-CONSTRUCT THE BASE WITH FORMS.

-USE CLASS 'B' CONCRETE.

-PAY FOR CONCRETE AS BRICK MASONRY.

-CONCRETE BRICK MAY BE USED IN LIEU OF CLAY BRICK.

-JUMBO BRICK WILL BE PERMITTED.

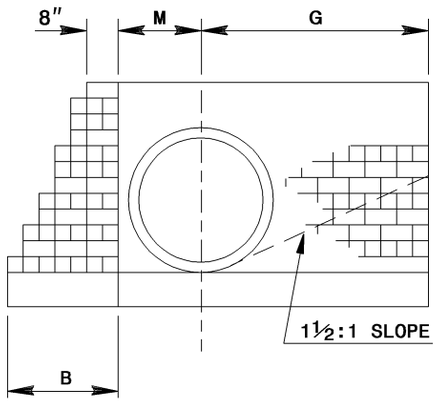

ELEVATION

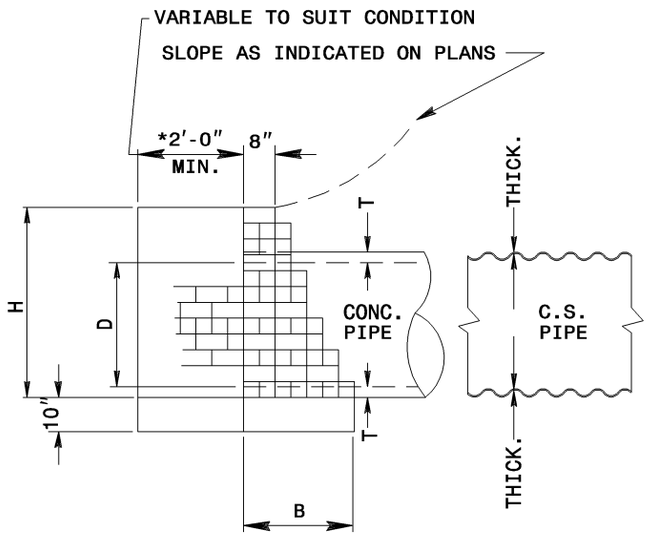

END ELEVATION

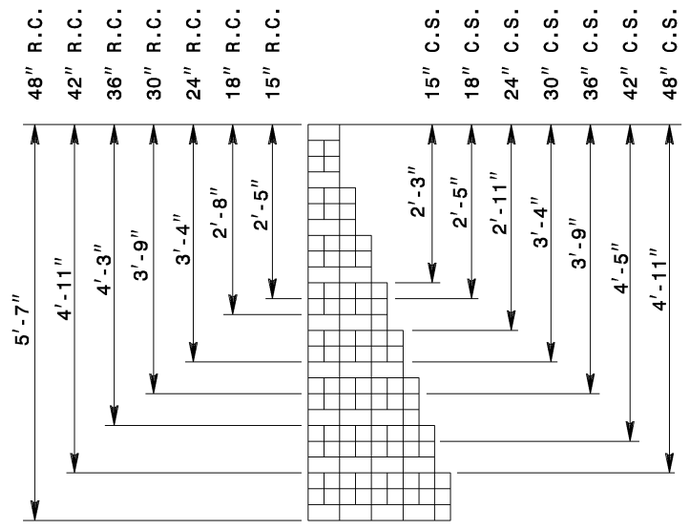

TYPICAL SECTION THRU WALL

*QUANTITIES BASED ON 2'-0"

DIMENSIONS AND CONCRETE QUANTITIES													
COMMON DIMENSIONS						USING R.C.P.		COMMON DIMENSIONS				USING C.S.P.	
						BRICK YD^3	CONC. YD^3					BRICK YD^3	CONC. YD^3
D	H	B	G	M	T			H	B	G	M		
15"	2'-5"	1'-8"	2'-10"	1'-0"	1⅞"	0.562	0.386	2'-3"	1'-4"	2'-9"	0'-11"	0.480	0.288
18"	2'-8"	1'-8"	3'-2"	1'-2"	2"	0.691	0.412	2'-5"	1'-8"	3'-0"	1'-0"	0.581	0.394
24"	3'-4"	2'-0"	4'-1"	1'-5"	3"	1.123	0.586	2'-11"	1'-8"	3'-9"	1'-3"	1.840	0.446
30"	3'-9"	2'-4"	4'-8"	1'-9"	3½"	1.513	0.774	3'-4"	2'-0"	4'-5"	1'-6"	1.167	0.612
36"	4'-3"	2'-4"	5'-5"	2'-0"	4"	1.958	0.846	3'-9"	2'-4"	5'-0"	1'-9"	1.562	0.798
42"	4'-11"	2'-8"	6'-4"	2'-4"	5¼"	2.841	1.097	4'-5"	2'-8"	6'-0"	2'-0"	2.318	1.043
48"	5'-7"	3'-0"	7'-3"	2'-8"	5¾"	3.865	1.381	4'-11"	2'-8"	6'-9"	2'-3"	2.929	1.125

STATE OF
NORTH CAROLINA
DEPT. OF TRANSPORTATION
DIVISION OF HIGHWAYS
RALEIGH, N.C.

7-06

ENGLISH STANDARD DRAWING FOR

BRICK "L" ENDWALL FOR SINGLE PIPE CULVERTS

15" THRU 48" PIPE

SHEET 1 OF 1

838.15