STATE OF
NORTH CAROLINA
DEPT. OF TRANSPORTATION
DIVISION OF HIGHWAYS
RALEIGH, N.C.

7-06

ENGLISH STANDARD DRAWING FOR

BRICK ENDWALL FOR SINGLE AND DOUBLE PIPE CULVERTS

40"X31" THRU 66"X51" PIPE ARCH 3"X1" CORRUGATIONS - 90° SKEW

SHEET 1 OF 1

838.17

GENERAL NOTES:

-ALL MORTAR JOINTS ARE ½" ± ⅛".

-BOND BRICKWORK WITH FULL HEADERS EVERY THREE COURSES.

-CONCAVE TOOL ALL EXPOSED JOINTS.

-CONSTRUCT THE BASE WITH FORMS.

-USE CLASS 'B' CONCRETE.

-PAY FOR CONCRETE AS BRICK MASONRY.

-CONCRETE BRICK MAY BE USED IN LIEU OF CLAY BRICK.

-JUMBO BRICK WILL BE PERMITTED.

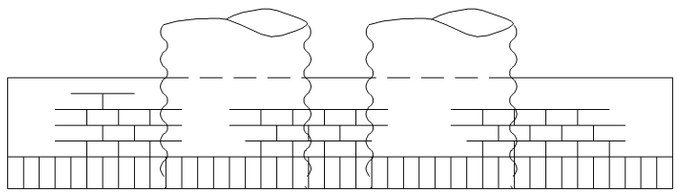

PLAN

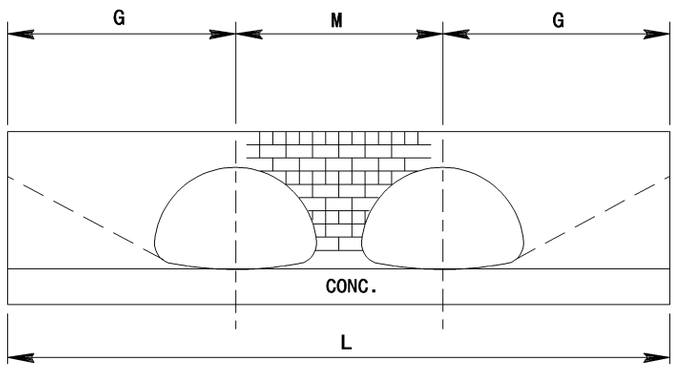

ELEVATION

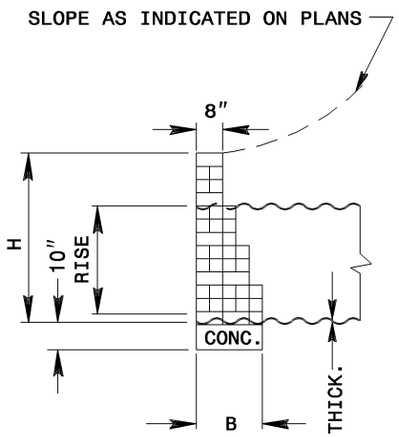

END ELEVATION

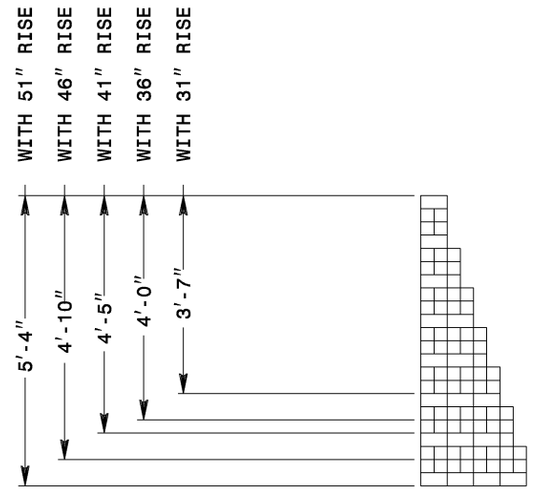

TYPICAL SECTION THRU WALL

DIMENSIONS AND BRICK QUANTITIES												
COMMON DIMENSIONS						SINGLE PIPE			DOUBLE PIPE			
SPAN	RISE	GAGE	H	B	G	L	BRICK YD^3	CONC. YD^3	M	L	BRICK YD^3	CONC. YD^3
40"	31"	0.109	3'-7"	2'-0"	5'-8"	11'-4"	1.572	0.700	4'-5"	15'-9"	1.968	0.972
46"	36"	0.109	4'-0"	2'-4"	6'-5"	12'-10"	2.154	0.924	5'-1"	17'-11"	2.692	1.290
53"	41"	0.109	4'-5"	2'-8"	7'-2"	14'-4"	2.848	1.180	5'-10"	20'-2"	3.575	1.660
60"	46"	0.109	4'-10"	2'-8"	8'-0"	16'-0"	3.726	1.317	6'-8"	22'-8"	4.712	1.866
66"	51"	0.109	5'-4"	3'-0"	8'-10"	17'-8"	4.787	1.636	7'-4"	25'-0"	6.031	2.315

STATE OF
NORTH CAROLINA
DEPT. OF TRANSPORTATION
DIVISION OF HIGHWAYS
RALEIGH, N.C.

7-06

ENGLISH STANDARD DRAWING FOR

BRICK ENDWALL FOR SINGLE AND DOUBLE PIPE CULVERTS

40"X31" THRU 66"X51" PIPE ARCH 3"X1" CORRUGATIONS - 90° SKEW

SHEET 1 OF 1

838.17