STATE OF
NORTH CAROLINA
DEPT. OF TRANSPORTATION
DIVISION OF HIGHWAYS
RALEIGH, N.C.

7-06

ENGLISH STANDARD DRAWING FOR

REINFORCED CONCRETE ENDWALL

FOR SINGLE 60" PIPE - 90° SKEW

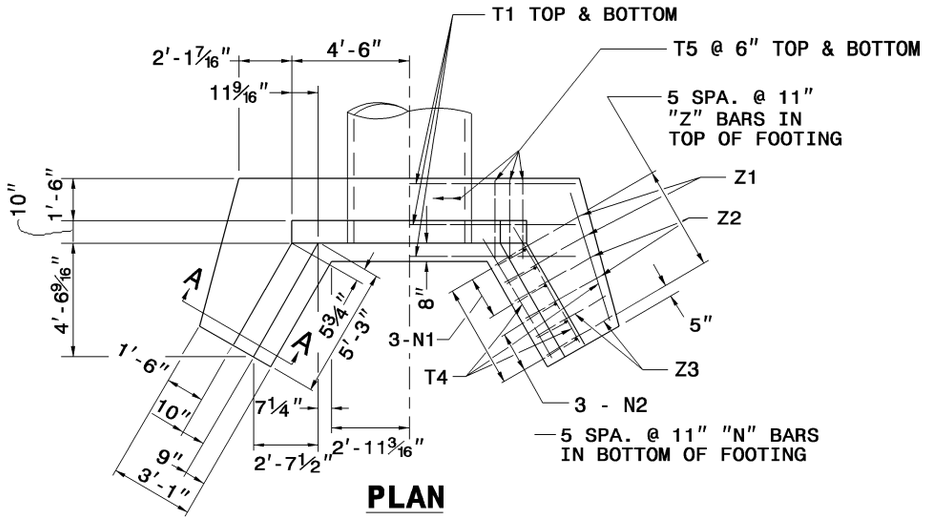

PLAN

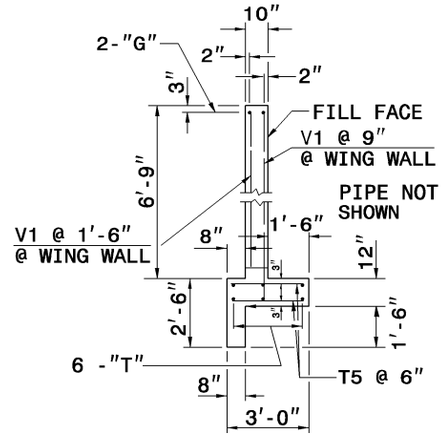

SECTION - BB

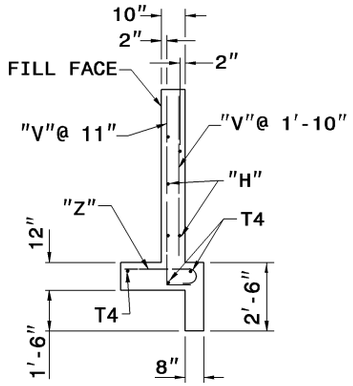

SECTION - AA

SEE STD. # 838.45 FOR GENERAL NOTES.

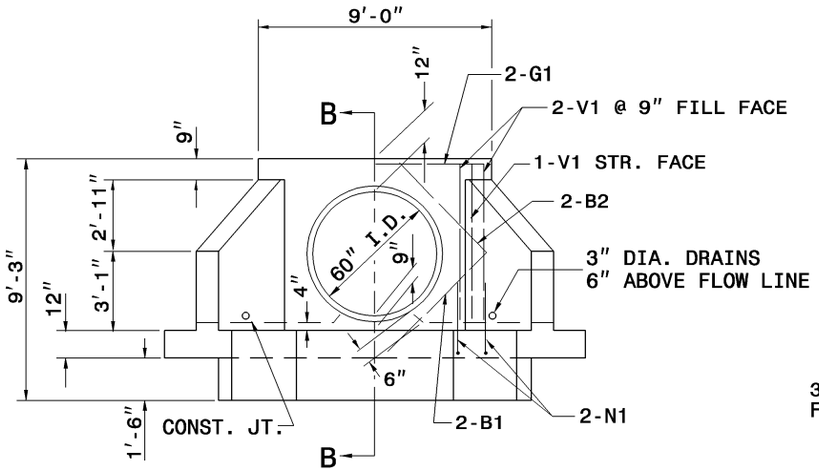

ELEVATION

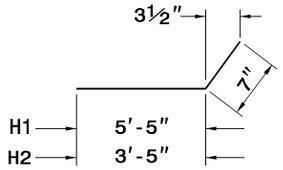

"H" BARS

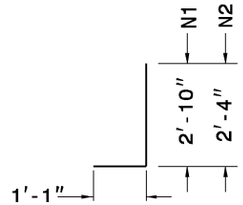

"N" BARS

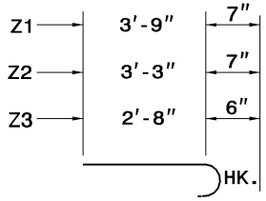

"Z" BARS

"H", "N", & "Z" BAR DIMENSIONS ARE OUT TO OUT.

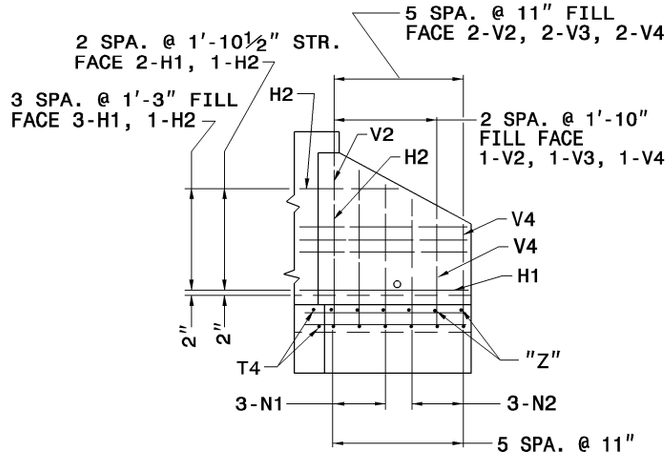

WING ELEVATION

BILL OF MATERIAL FOR ENDWALL				
REINF. STEEL			1 PIPE	
BAR	SIZE	LENGTH	NO.	WEIGHT
B1	#4	5'-6"	4	15
B2	#4	4'-6"	4	12
G1	#7	8'-8"	2	35
H1	#4	6'-0"	10	40
H2	#4	4'-0"	4	11
N1	#5	3'-11"	10	41
N2	#4	3'-5"	6	14
T1	#4	12'-8"	6	51
T4	#4	5'-6"	6	22
T5	#4	2'-6"	36	60
V1	#4	6'-3"	6	25
V2	#4	5'-1"	6	20
V3	#4	3'-11"	6	16
V4	#4	2'-9"	6	11
Z1	#5	4'-4"	4	18
Z2	#4	3'-10"	4	10
Z3	#4	3'-2"	4	8
REINF. STEEL LBS.				409
CON./R.C. CU. YDS			5.6	

STATE OF
NORTH CAROLINA
DEPT. OF TRANSPORTATION
DIVISION OF HIGHWAYS
RALEIGH, N.C.

7-06

ENGLISH STANDARD DRAWING FOR

REINFORCED CONCRETE ENDWALL

FOR SINGLE 60" PIPE - 90° SKEW

SHEET 1 OF 2
838.27