STATE OF NORTH CAROLINA
DEPT. OF TRANSPORTATION
DIVISION OF HIGHWAYS
RALEIGH, N.C.

7-06

ENGLISH STANDARD DRAWING FOR

REINFORCED CONCRETE ENDWALL

FOR SINGLE 66" PIPE 90° SKEW

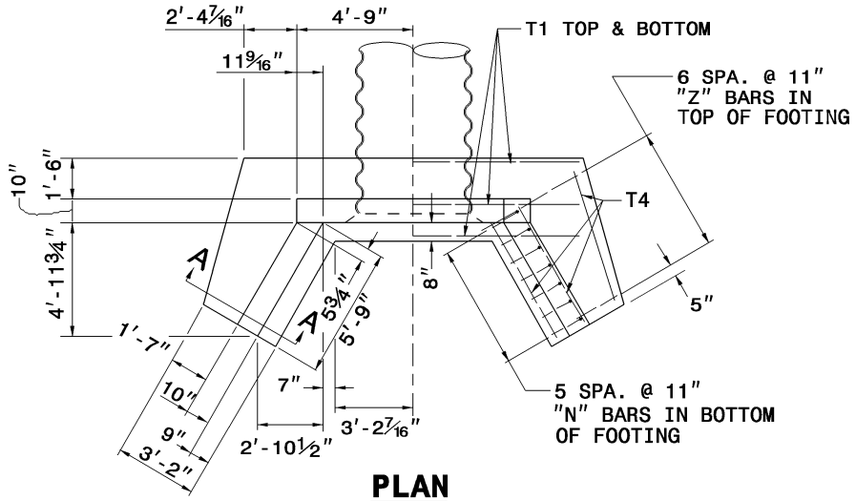

PLAN

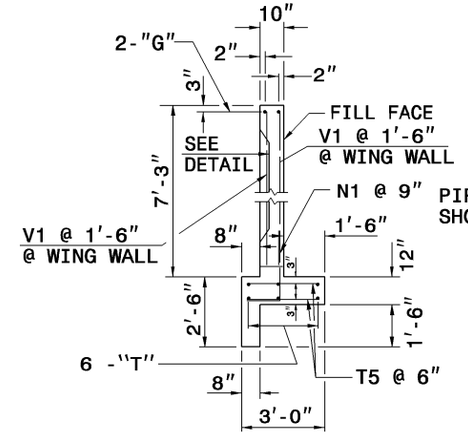

SECTION - BB

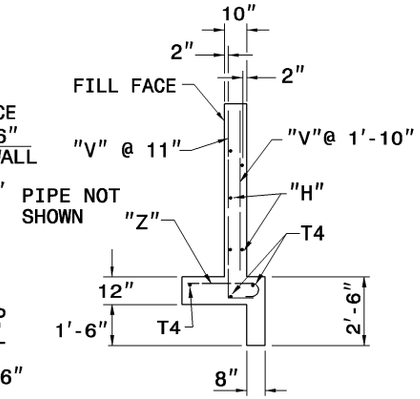

SECTION - AA

SEE STD.# 838.45 FOR GENERAL NOTES.

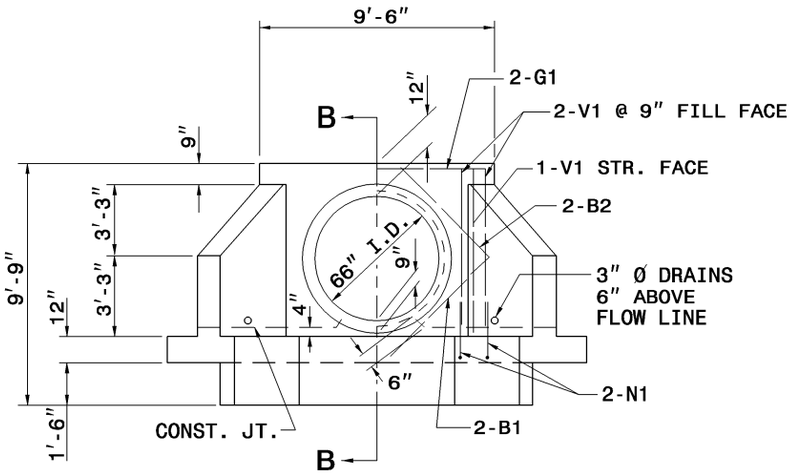

ELEVATION

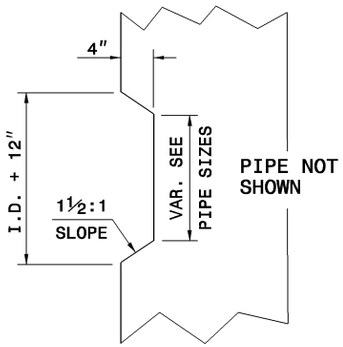

TAPER DETAIL

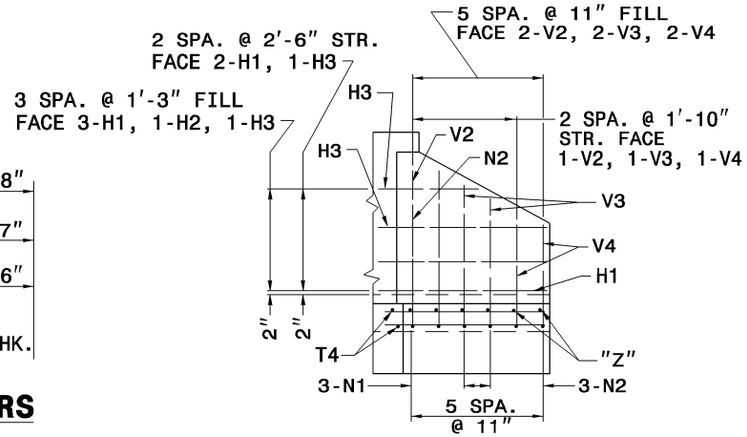

WING ELEVATION

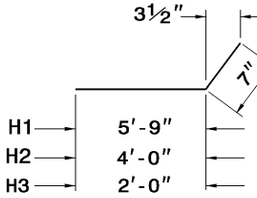

"H" BARS

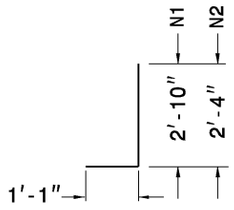

"N" BARS

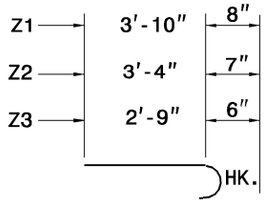

"Z" BARS

"H", "N", & "Z" BAR DIMENSIONS ARE OUT TO OUT.

BILL OF MATERIAL FOR ENDWALL

REINF. STEEL			1 PIPE	
BAR	SIZE	LENGTH	NO.	WEIGHT
B1	#4	5'-6"	4	15
B2	#4	4'-6"	4	12
G1	#7	9'-2"	2	37
H1	#4	6'-4"	10	42
H2	#4	4'-7"	2	6
H3	#4	2'-7"	4	7
N1	#5	3'-11"	10	41
N2	#4	3'-5"	6	14
T1	#4	13'-8"	6	55
T4	#4	6'-0"	6	24
T5	#4	2'-6"	38	63
V1	#4	6'-9"	6	27
V2	#4	5'-2"	6	21
V3	#4	4'-1"	6	16
V4	#4	2'-11"	6	12
Z1	#6	4'-6"	6	41
Z2	#5	3'-11"	4	16
Z3	#4	3'-3"	4	9
REINF. STEEL LBS.				458
CON./C.S. CU. YDS			6.6	

STATE OF NORTH CAROLINA
DEPT. OF TRANSPORTATION
DIVISION OF HIGHWAYS
RALEIGH, N.C.

7-06

ENGLISH STANDARD DRAWING FOR

REINFORCED CONCRETE ENDWALL

FOR SINGLE 66" PIPE 90° SKEW

SHEET 2 OF 2
838.33