STATE OF NORTH CAROLINA
DEPT. OF TRANSPORTATION
DIVISION OF HIGHWAYS
RALEIGH, N.C.

7-06

ENGLISH STANDARD DRAWING FOR

REINFORCED CONCRETE ENDWALL

FOR DOUBLE & TRIPLE 66" PIPE - 90° SKEW

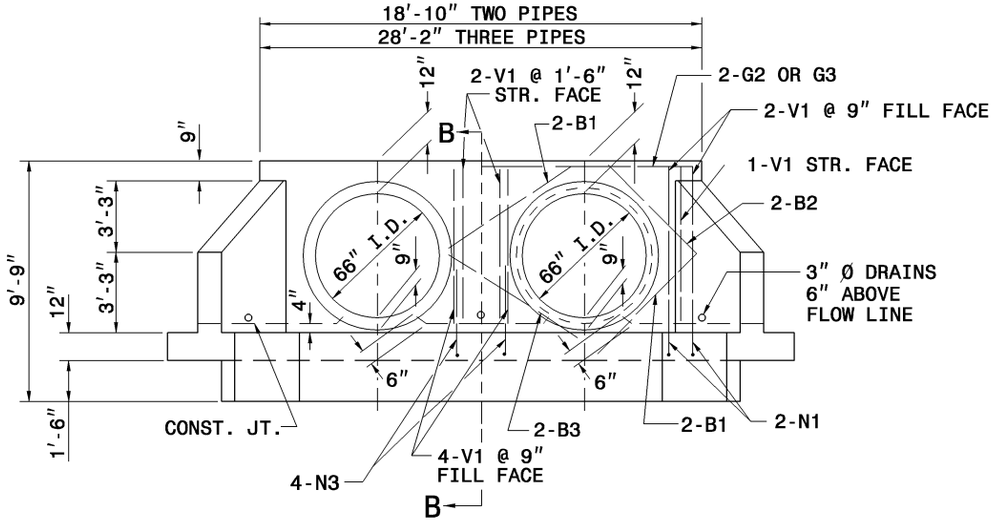

ELEVATION

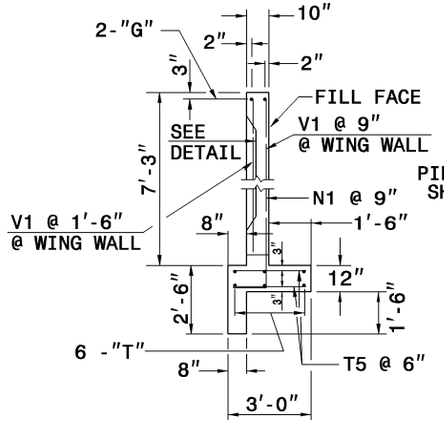

SECTION - BB

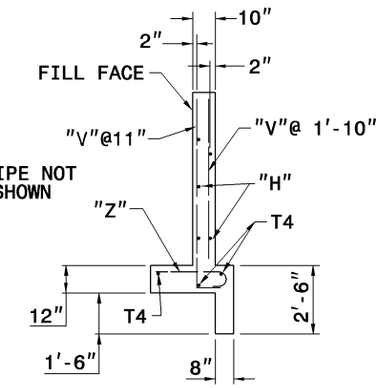

SECTION - AA

SEE STD. # 838.45 FOR GENERAL NOTES.

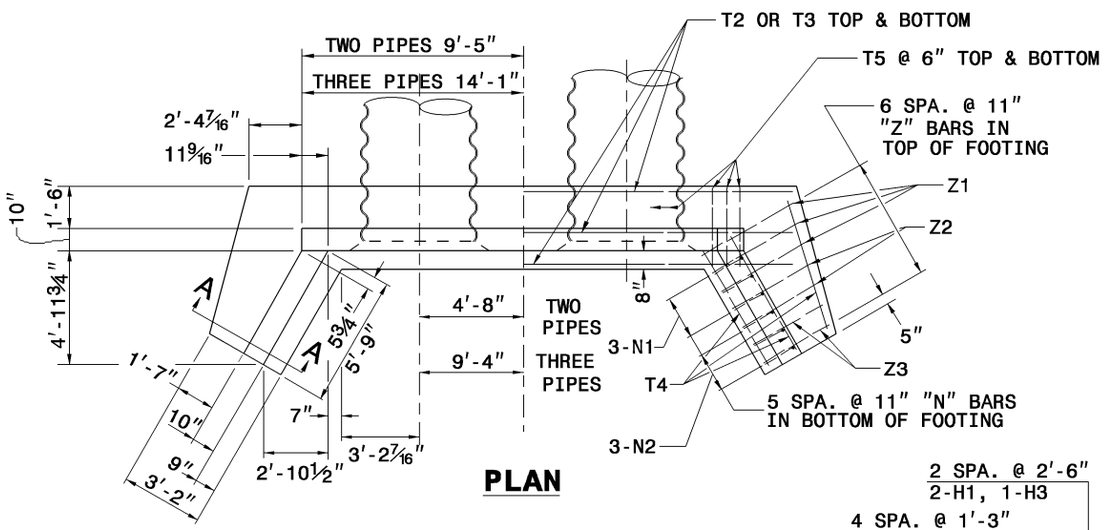

PLAN

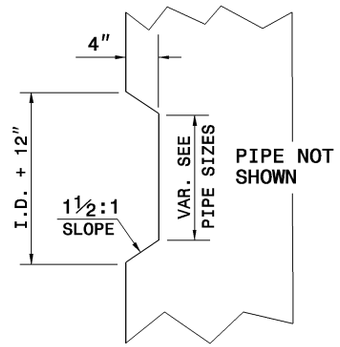

TAPER DETAIL

BILL OF MATERIAL FOR ENDWALL						
REINF. STEEL			2 PIPES		3 PIPES	
BAR	SIZE	LENGTH	NO.	WEIGHT	NO.	WEIGHT
B1	#4	5'-6"	8	29	12	44
B2	#4	4'-6"	4	12	4	12
B3	#4	7'-0"	4	19	8	37
G2	#7	18'-6"	2	76	-	-
G3	#7	27'-10"	-	-	2	114
H1	#4	6'-4"	10	42	10	42
H2	#4	4'-7"	2	6	2	6
H3	#4	2'-7"	4	7	4	7
N1	#5	3'-11"	14	57	18	74
N2	#4	3'-5"	6	14	6	14
T2	#4	23'-0"	6	92		
T3	#4	16'-10"			12	135
T4	#4	6'-0"	6	24	6	24
T5	#4	2'-6"	76	127	112	187
V1	#4	6'-9"	12	54	18	81
V2	#4	5'-2"	6	21	6	21
V3	#4	4'-1"	6	16	6	16
V4	#4	2'-11"	6	12	6	12
Z1	#6	4'-6"	6	41	6	41
Z2	#6	3'-11"	4	16	4	16
Z3	#4	3'-3"	4	9	4	9
REINF. STEEL LBS.				674		892
CON./C.S. CU. YDS				9.3		12.0

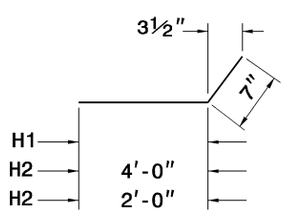

"H" BARS

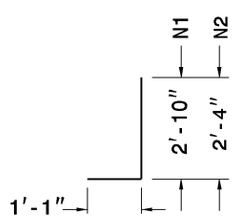

"N" BARS

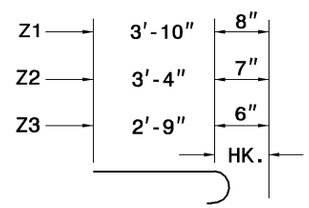

"Z" BARS

"H", "N", & "Z" BAR DIMENSIONS ARE OUT TO OUT.

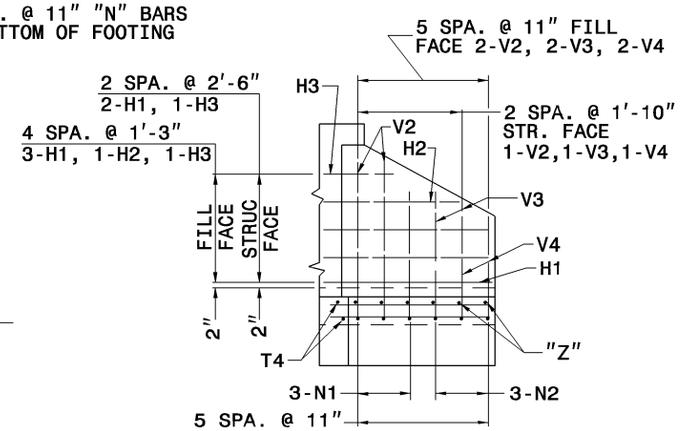

WING ELEVATION

STATE OF NORTH CAROLINA
DEPT. OF TRANSPORTATION
DIVISION OF HIGHWAYS
RALEIGH, N.C.

7-06

ENGLISH STANDARD DRAWING FOR

REINFORCED CONCRETE ENDWALL

FOR DOUBLE & TRIPLE 66" PIPE - 90° SKEW

SHEET 2 OF 2

838.34

SHEET 2 OF 2

838.34