STATE OF
NORTH CAROLINA
DEPT. OF TRANSPORTATION
DIVISION OF HIGHWAYS
RALEIGH, N.C.

7-06

ENGLISH STANDARD DRAWING FOR

REINFORCED CONCRETE ENDWALL

FOR SINGLE 72" PIPE 90° SKEW

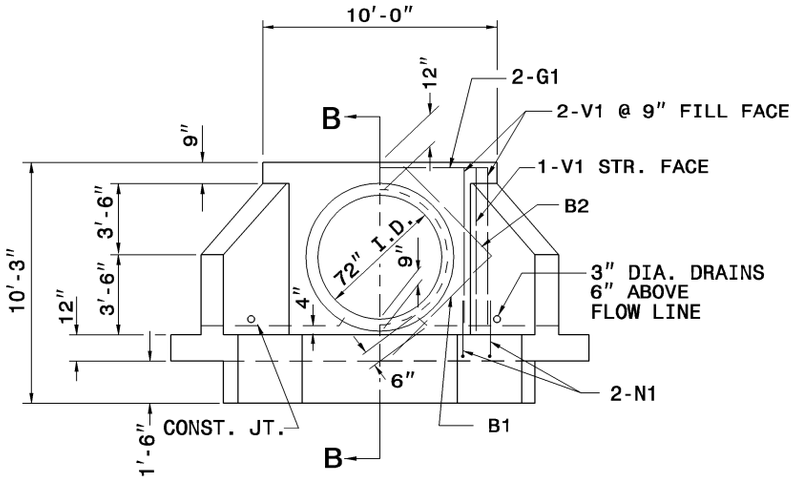

ELEVATION

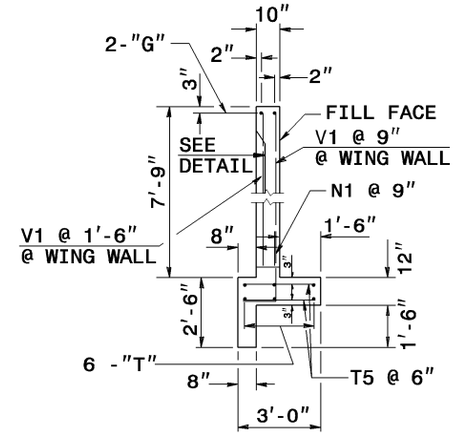

SECTION - BB

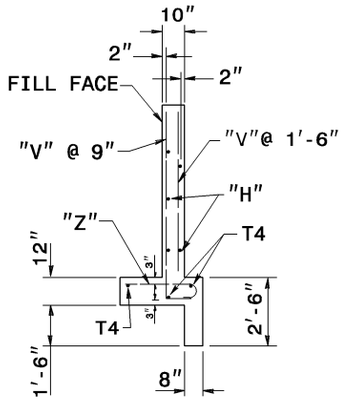

SECTION - AA

SEE STD.# 838.45 FOR GENERAL NOTES.

BILL OF MATERIAL FOR ENDWALL				
REINF. STEEL			1 PIPE	
BAR	SIZE	LENGTH	NO.	WEIGHT
B1	#4	5'-6"	4	15
B2	#4	4'-6"	4	12
G1	#7	9'-8"	2	40
H1	#4	7'-2"	10	48
H2	#4	5'-6"	2	7
H3	#4	3'-5"	4	9
N1	#5	3'-11"	14	57
N2	#4	3'-5"	8	18
T1	#4	14'-6"	6	58
T4	#4	6'-9"	6	27
T5	#4	2'-6"	40	67
V1	#4	7'-3"	6	29
V2	#4	5'-10"	10	39
V3	#4	5'-0"	6	20
V4	#4	4'-1"	6	16
V5	#4	3'-2"	6	13
Z1	#6	4'-8"	6	42
Z2	#5	4'-0"	6	25
Z3	#4	3'-4"	6	13
REINF. STEEL LBS.				555
CON./C.S. CU. YDS			7.5	

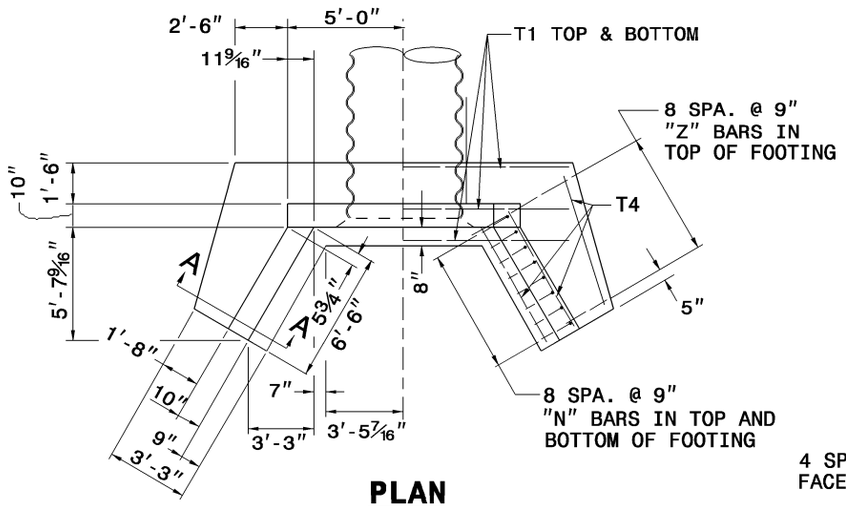

PLAN

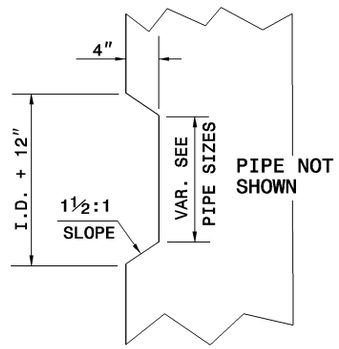

TAPER DETAIL

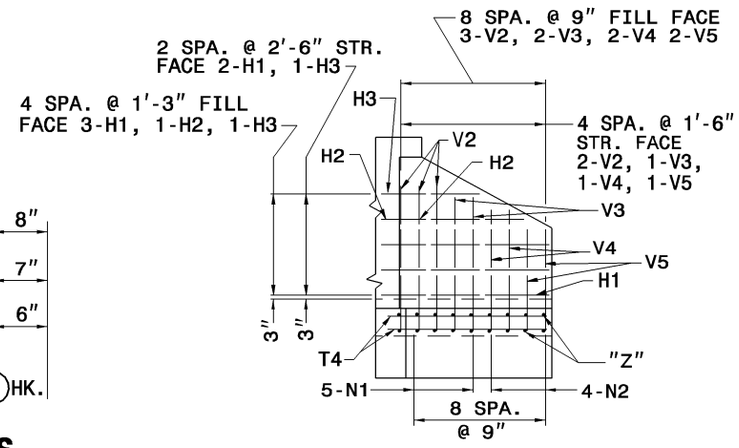

WING ELEVATION

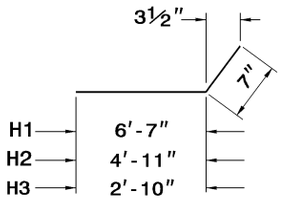

"H" BARS

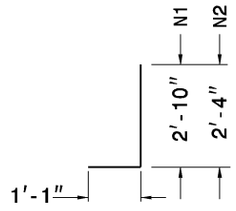

"N" BARS

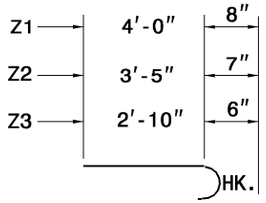

"Z" BARS

"H", "N", & "Z" BAR DIMENSIONS ARE OUT TO OUT.

SHEET 2 OF 2

838.39

STATE OF
NORTH CAROLINA
DEPT. OF TRANSPORTATION
DIVISION OF HIGHWAYS
RALEIGH, N.C.

7-06

ENGLISH STANDARD DRAWING FOR

REINFORCED CONCRETE ENDWALL

FOR SINGLE 72" PIPE 90° SKEW

SHEET 2 OF 2

838.39