STATE OF
NORTH CAROLINA
DEPT. OF TRANSPORTATION
DIVISION OF HIGHWAYS
RALEIGH, N.C.

7-06

ENGLISH STANDARD DRAWING FOR

GUARDRAIL END DELINEATION

TOP VIEW

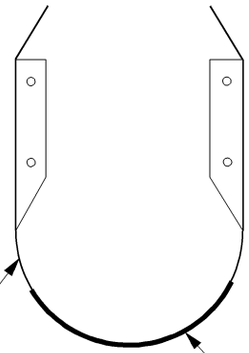

GUARDRAIL BUFFER
END SECTION

TYPE III OR IV HIGH INTENSITY
YELLOW RETROREFLECTIVE SHEETING
(8″ X 3′)

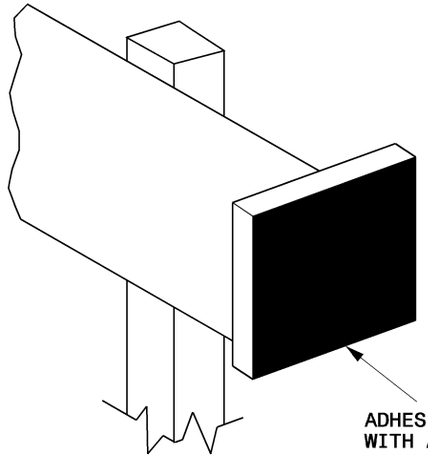

ADHESIVE COATED YELLOW REFLECTIVE SHEETING
WITH A PRESSURE SENSITIVE ADHESIVE BACKING

FRONT VIEW

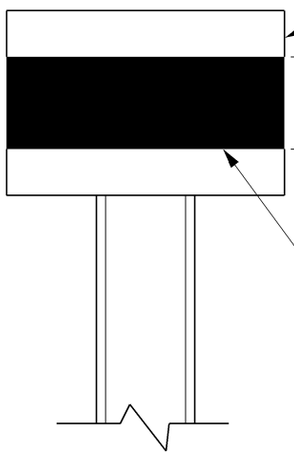

GUARDRAIL BUFFER
END SECTION

TYPE III OR IV HIGH INTENSITY
YELLOW RETROREFLECTIVE SHEETING
(8″ X 3′)

SIDE VIEW

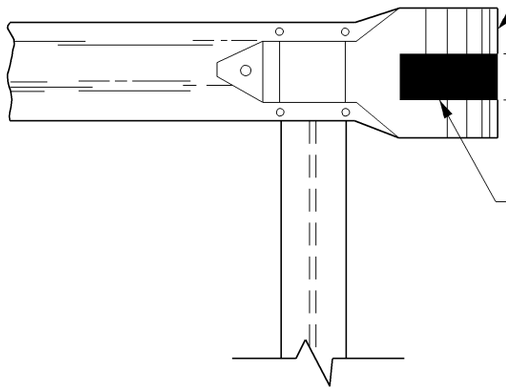

GUARDRAIL BUFFER
END SECTION

TYPE III OR IV HIGH INTENSITY
YELLOW RETROREFLECTIVE SHEETING
(8″ X 3′)

GENERAL NOTES

1- GUARDRAIL END DELINEATION IS REQUIRED ON ALL APPROACH AND TRAILING END GUARDRAIL BUFFER END SECTIONS (TEMPORARY AND PERMANENT).

SHEET 1 OF 1

1262.01

STATE OF
NORTH CAROLINA
DEPT. OF TRANSPORTATION
DIVISION OF HIGHWAYS
RALEIGH, N.C.

7-06

ENGLISH STANDARD DRAWING FOR

GUARDRAIL END DELINEATION

SHEET 1 OF 1

1262.01