STATE OF
NORTH CAROLINA
DEPT. OF TRANSPORTATION
DIVISION OF HIGHWAYS
RALEIGH, N.C.

7-06

ENGLISH STANDARD DRAWING FOR

OBJECT MARKERS

TYPE I OBJECT MARKERS

ALTERNATE 1

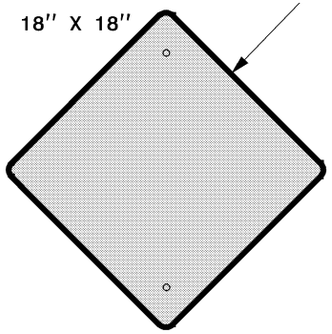

ALTERNATE 2

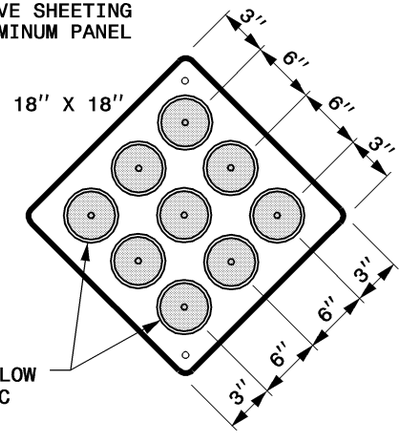

TYPE 2 OBJECT MARKERS

ALTERNATE 1

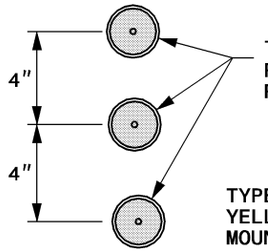

ALTERNATE 2

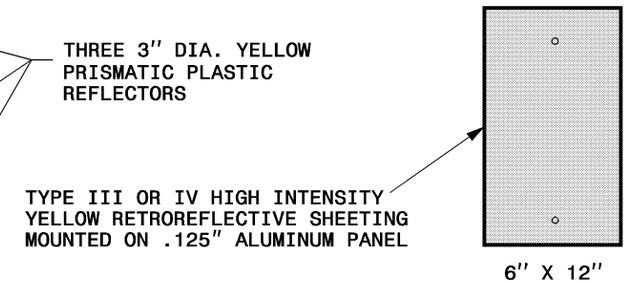

TYPE 3 OBJECT MARKERS

OM-3L
12" X 36"

TYPE III OR IV HIGH INTENSITY
ALTERNATE BLACK AND YELLOW STRIPES
RETROREFLECTIVE SHEETING
MOUNTED ON .125" ALUMINUM PANEL

STRIPES SLOPE DOWNWARD AT 45°
TOWARD THE SIDE OF OBSTRUCTION
WHICH TRAFFIC IS TO PASS

OM-3R
12" X 36"

END OF ROAD MARKERS

ALTERNATE 1

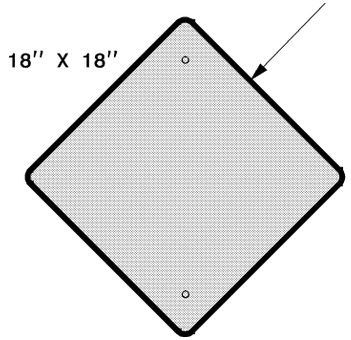

ALTERNATE 2

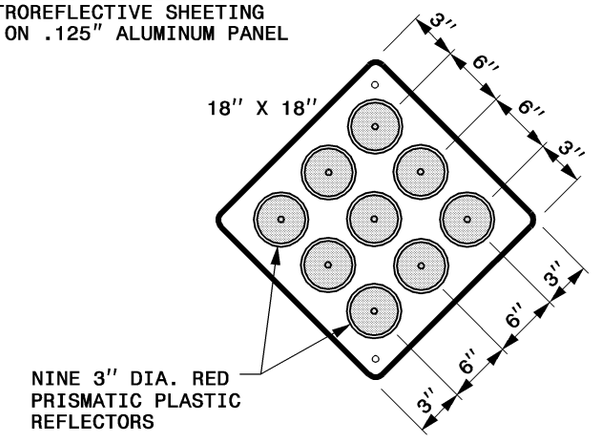

SHEET 1 OF 1

1264.01

STATE OF
NORTH CAROLINA
DEPT. OF TRANSPORTATION
DIVISION OF HIGHWAYS
RALEIGH, N.C.

7-06

ENGLISH STANDARD DRAWING FOR

OBJECT MARKERS

SHEET 1 OF 1

1264.01