STATE OF
NORTH CAROLINA
DEPT. OF TRANSPORTATION
DIVISION OF HIGHWAYS
RALEIGH, N.C.

7-06

ENGLISH STANDARD DRAWING FOR
LIGHT STANDARDS
BREAKAWAY BASES

NOTES

1. MOUNTING HEIGHT INCLUDES BREAKAWAY BASE FOR LIGHT STANDARDS WITH TRANSFORMER BASES.
2. FIT PROTECTIVE SHROUD SNUGLY AROUND BASE PLATE TO PROTECT CONDUIT AND WIRING AT BASE OF STANDARD.
3. PROVIDE WASHERS AND SHIMS REQUIRED BY BASE MANUFACTURER.
4. PROVIDE ACCESSIBLE GROUNDING LUG INSIDE.
5. LABEL ALL BASES TO SHOW COMPLIANCE WITH AASHTO BREAKAWAY REQUIREMENTS.

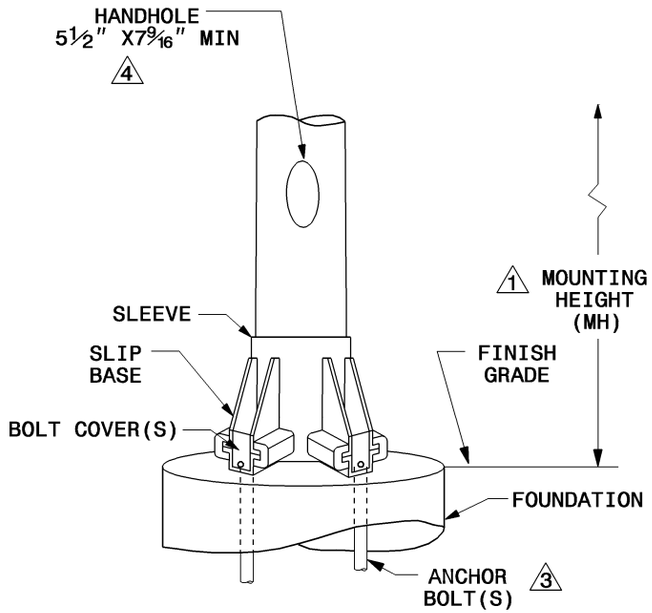

SLIP BASE

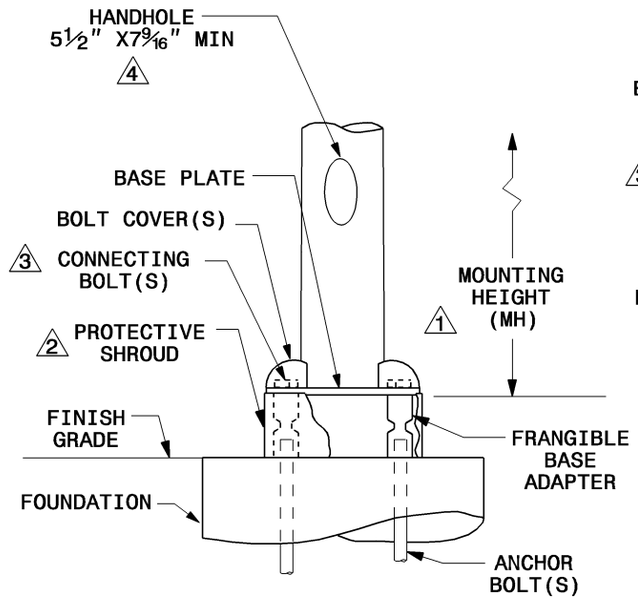

FRANGIBLE BASE INSERT\ADAPTER

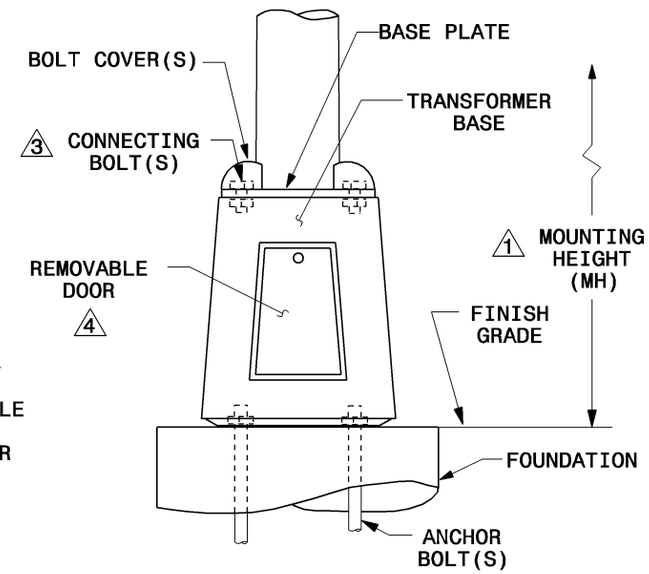

TRANSFORMER BASE

BASE DETAILS 5

STATE OF
NORTH CAROLINA
DEPT. OF TRANSPORTATION
DIVISION OF HIGHWAYS
RALEIGH, N.C.

7-06

ENGLISH STANDARD DRAWING FOR
LIGHT STANDARDS
BREAKAWAY BASES

SHEET 2 OF 3
1404.01