STATE OF
NORTH CAROLINA
DEPT. OF TRANSPORTATION
DIVISION OF HIGHWAYS
RALEIGH, N.C.

7-06

METRIC STANDARD DRAWING FOR

# REINFORCED CONCRETE ENDWALL

FOR DOUBLE & TRIPLE

1500mm PIPE - 90° SKEW

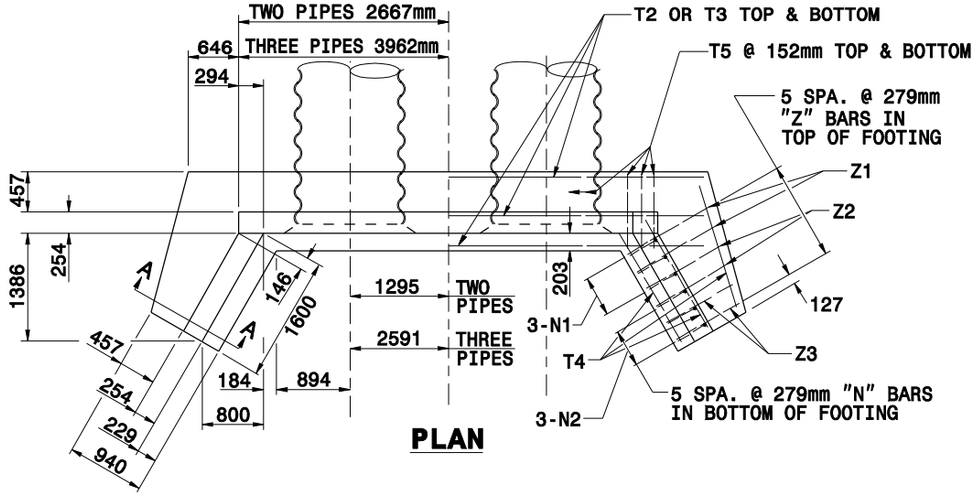


PLAN

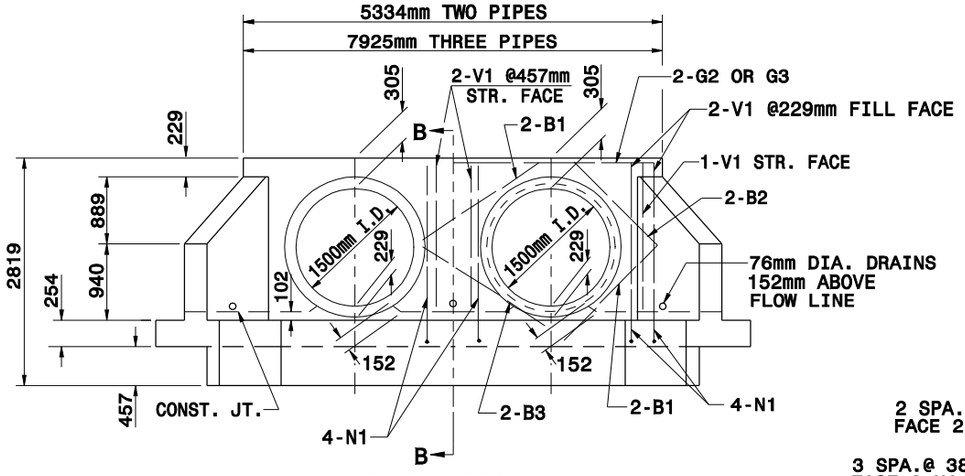


ELEVATION

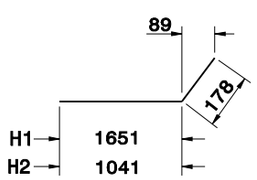


"H" BARS

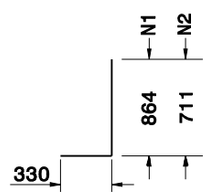


"N" BARS

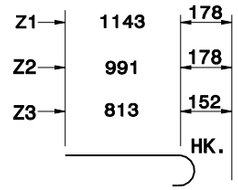


"Z" BARS

**Note:**
**This drawing is dimensioned in millimeters unless otherwise depicted within the drawing.**

"H", "N", & "Z" BAR DIMENSIONS ARE OUT TO OUT.

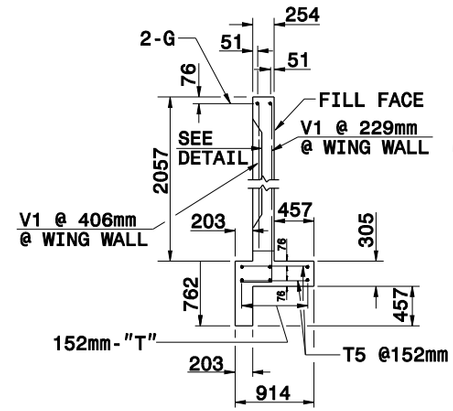


SECTION B-B

PIPE NOT SHOWN

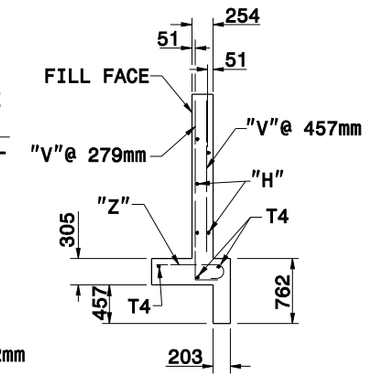


SECTION A-A

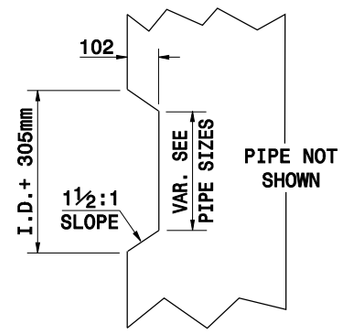


TAPER DETAIL

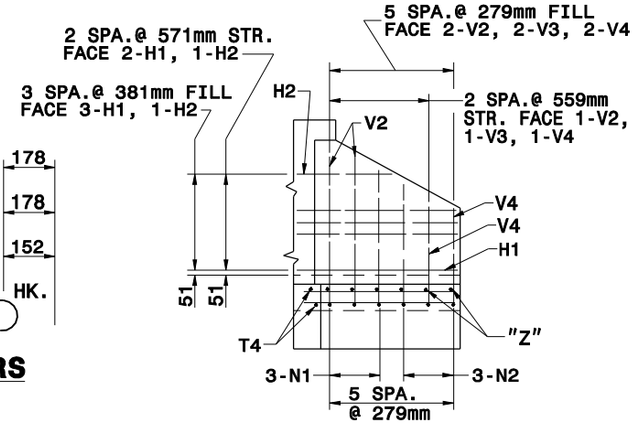


WING ELEVATION

SEE STD.# 838.45 FOR GENERAL NOTES.

**BILL OF MATERIAL FOR ENDWALL**

| REINF. STEEL | | | 2 PIPES | | 3 PIPES | |
|---|---|---|---|---|---|---|
| BAR | SIZE | LENGTH | NO. | WEIGHT | NO. | WEIGHT |
| B1 | #13 | 1676 | 8 | 16 | 12 | 20 |
| B2 | #13 | 1372 | 4 | 6 | 4 | 6 |
| B3 | #13 | 1981 | 4 | 8 | 8 | 16 |
| | | | | | | |
| G2 | #22 | 5232 | 2 | 32 | - | - |
| G3 | #22 | 7823 | - | - | 2 | 48 |
| H1 | #13 | 1829 | 10 | 18 | 10 | 18 |
| H2 | #13 | 1219 | 4 | 5 | 4 | 5 |
| | | | | | | |
| N1 | #13 | 1194 | 14 | 17 | 18 | 21 |
| N2 | #13 | 1041 | 6 | 6 | 6 | 6 |
| | | | | | | |
| | | | | | | |
| T1 | #13 | 6452 | 6 | 39 | - | - |
| T2 | #13 | 9042 | | | 6 | 54 |
| | | | | | | |
| T4 | #13 | 1676 | 6 | 10 | 6 | 10 |
| T5 | #13 | 762 | 70 | 53 | 104 | 79 |
| V1 | #13 | 1905 | 12 | 23 | 18 | 34 |
| V2 | #13 | 1549 | 6 | 9 | 6 | 9 |
| V3 | #13 | 1194 | 6 | 7 | 6 | 7 |
| V4 | #13 | 838 | 6 | 5 | 6 | 5 |
| Z1 | #13 | 1321 | 4 | 5 | 4 | 5 |
| Z2 | #13 | 1168 | 4 | 5 | 4 | 5 |
| Z3 | #13 | 965 | 4 | 4 | 4 | 4 |
| | | | | | | |
| | | | | | | |
| REINF. STEEL kg. | | | | 268 | | 352 |
| CON./C.S. $m^3$ | | | 6.3 | | 8.2 | |


STATE OF
NORTH CAROLINA
DEPT. OF TRANSPORTATION
DIVISION OF HIGHWAYS
RALEIGH, N.C.

7-06

METRIC STANDARD DRAWING FOR

REINFORCED CONCRETE ENDWALL

FOR DOUBLE & TRIPLE

1500mm PIPE - 90° SKEW





SHEET 2 OF 2

838.28