STATE OF
NORTH CAROLINA
DEPT. OF TRANSPORTATION
DIVISION OF HIGHWAYS
RALEIGH, N.C.

7-06

METRIC STANDARD DRAWING FOR

REINFORCED CONCRETE ENDWALL

FOR SINGLE 1650mm PIPE 90° SKEW

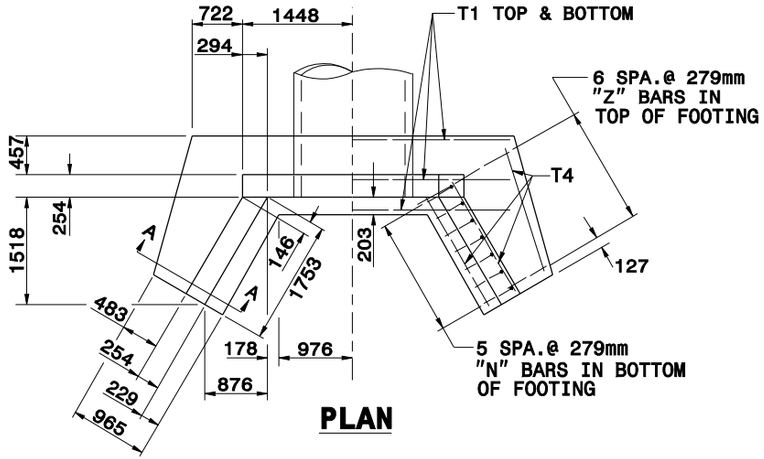

PLAN

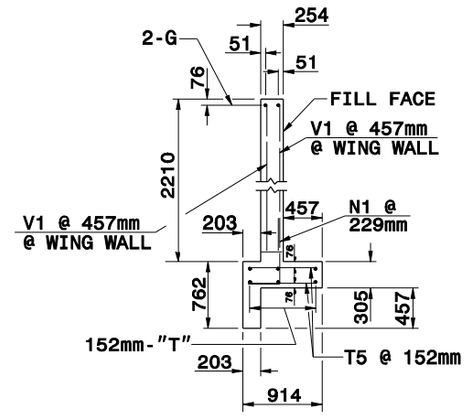

SECTION B-B

PIPE NOT SHOWN

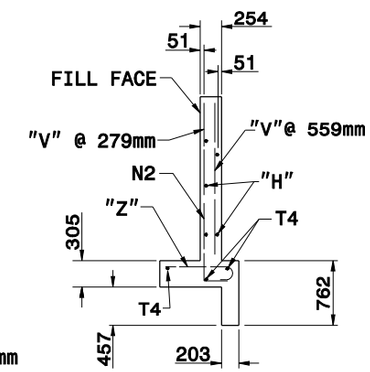

SECTION A-A

SEE STD.# 838.45 FOR GENERAL NOTES.

BILL OF MATERIAL FOR ENDWALL				
REINF. STEEL			1 PIPE	
BAR	SIZE	LENGTH	NO.	WEIGHT
B1	#13	1676	4	7
B2	#13	1372	4	6
G1	#22	2794	2	17
H1	#13	1930	10	19
H2	#13	1397	2	3
H3	#13	787	4	3
N1	#16	1194	10	19
N2	#13	1041	6	6
T1	#13	4166	6	25
T4	#13	1829	6	11
T5	#13	762	38	29
V1	#13	2057	6	12
V2	#13	1575	6	9
V3	#13	1245	6	7
V4	#13	889	6	5
Z1	#19	1372	6	18
Z2	#16	1194	4	7
Z3	#13	991	4	4
REINF. STEEL kg.				207
CON./R.C. m^3				4.8

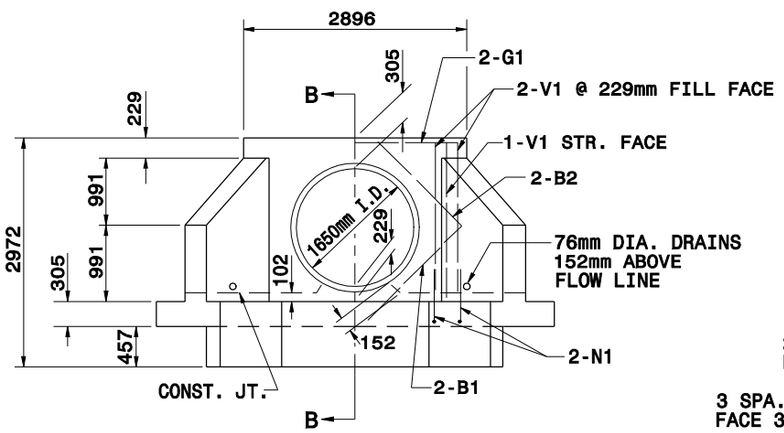

ELEVATION

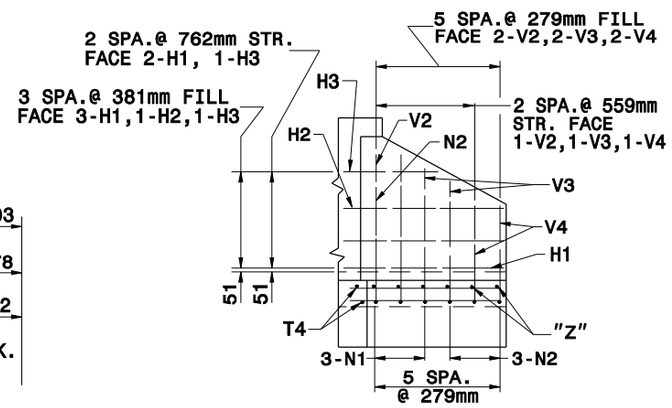

WING ELEVATION

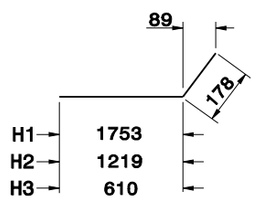

"H" BARS

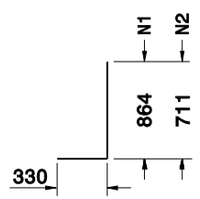

"N" BARS

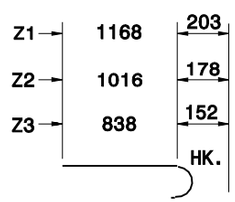

"Z" BARS

Note:
This drawing is dimensioned in millimeters unless otherwise depicted within the drawing.

"H", "N", & "Z" BAR DIMENSIONS ARE OUT TO OUT.

SHEET 1 OF 2

838.33

STATE OF
NORTH CAROLINA
DEPT. OF TRANSPORTATION
DIVISION OF HIGHWAYS
RALEIGH, N.C.

7-06

METRIC STANDARD DRAWING FOR

REINFORCED CONCRETE ENDWALL

FOR SINGLE 1650mm PIPE 90° SKEW

SHEET 1 OF 2

838.33