STATE OF
NORTH CAROLINA
DEPT. OF TRANSPORTATION
DIVISION OF HIGHWAYS
RALEIGH, N.C.

7-06

METRIC STANDARD DRAWING FOR

REINFORCED CONCRETE ENDWALL

FOR SINGLE 1800mm PIPE 90° SKEW

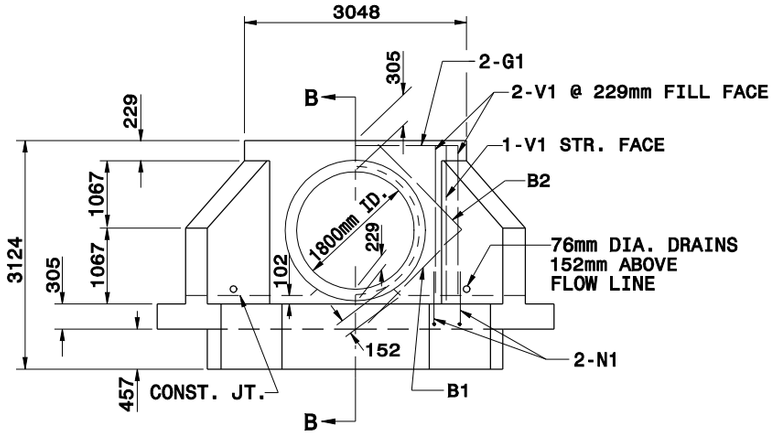

ELEVATION

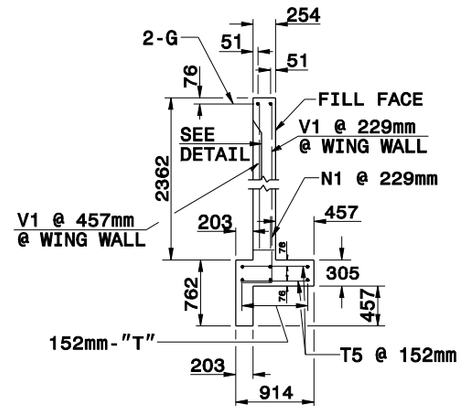

SECTION B-B

PIPE NOT SHOWN

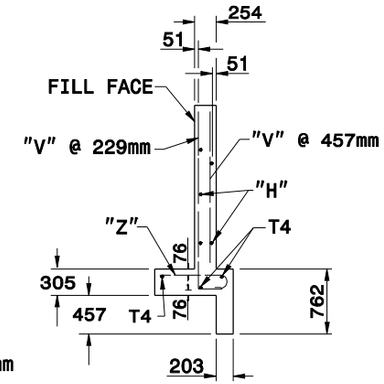

SECTION A-A

SEE STD.#838.45 FOR GENERAL NOTES.

BILL OF MATERIAL FOR ENDWALL				
REINF. STEEL			1 PIPE	
BAR	SIZE	LENGTH	NO.	WEIGHT
B1	#13	1676	4	7
B2	#13	1372	4	6
G1	#22	2946	2	18
H1	#13	2184	10	22
H2	#13	1676	2	3
H3	#13	1041	4	4
N1	#16	1194	14	26
N2	#13	1041	8	8
T1	#13	4420	6	26
T4	#13	2057	6	12
T5	#13	762	40	30
V1	#13	2210	6	13
V2	#13	1778	10	18
V3	#13	1524	6	9
V4	#13	1245	6	7
V5	#13	965	6	6
Z1	#19	1422	6	19
Z2	#16	1219	6	11
Z3	#13	1016	6	6
REINF. STEEL kg.				251
CON./C.S. m^3			5.7	

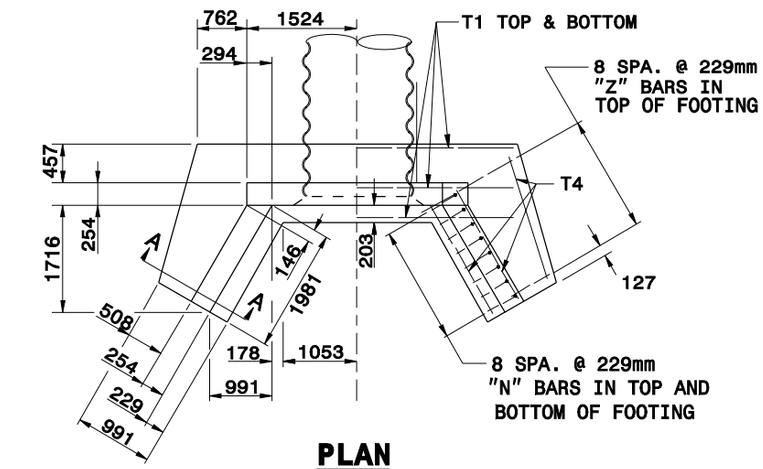

PLAN

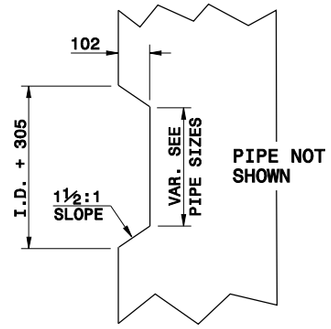

TAPER DETAIL

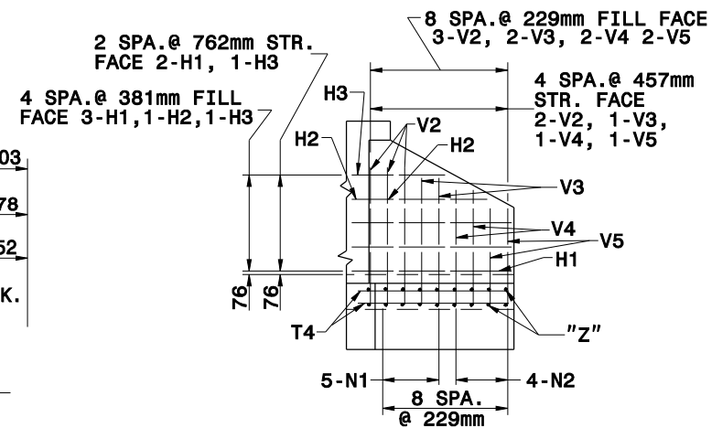

WING ELEVATION

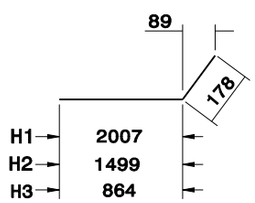

"H" BARS

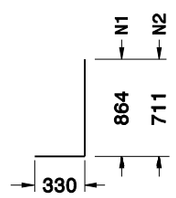

"N" BARS

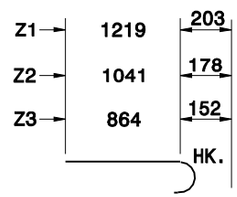

"Z" BARS

Note:
This drawing is dimensioned in millimeters unless otherwise depicted within the drawing.

SHEET 2 OF 2

838.39

STATE OF
NORTH CAROLINA
DEPT. OF TRANSPORTATION
DIVISION OF HIGHWAYS
RALEIGH, N.C.

7-06

METRIC STANDARD DRAWING FOR

REINFORCED CONCRETE ENDWALL

FOR SINGLE 1800mm PIPE 90° SKEW

SHEET 2 OF 2

838.39