STATE OF
NORTH CAROLINA
DEPT. OF TRANSPORTATION
DIVISION OF HIGHWAYS
RALEIGH, N.C.

7-06

METRIC STANDARD DRAWING FOR

REINFORCED BRICK ENDWALL

FOR SINGLE 1650mm PIPE - 90° SKEW

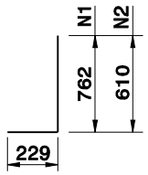

"N" BARS

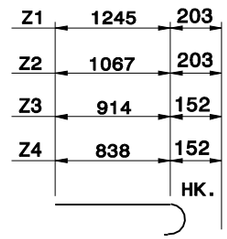

"Z" BARS

"N" & "Z" BAR DIMENSIONS ARE OUT TO OUT.

*PAY FOR CONCRETE AS BRICK MASONRY.

BILL OF MATERIAL FOR ENDWALL				
REINF. STEEL			1 PIPE	
BAR	SIZE	LENGTH	NO.	WEIGHT
B1	#15	1600	2	5
B2	#15	1219	2	4
G1	#25	2642	2	21
H1	#15	1905	6	18
H2	#15	1524	2	5
H3	#15	914	2	3
N1	#15	991	14	22
N2	#15	838	6	8
T1	#15	4216	6	40
T4	#15	1753	6	17
T5	#15	762	36	43
V1	#15	2108	6	20
V2	#15	1880	2	6
V3	#15	1600	4	10
V4	#15	1270	4	8
V5	#15	965	4	6
Z1	#20	1448	6	14
Z2	#20	1270	4	10
Z3	#15	1067	4	7
Z4	#15	991	2	3
REINF. STEEL kg.				270
*CL. "A" CONC. FOOT. m^3			2.5	
BR. MASONRY/C.S. m^3			2.4	
BR. MASONRY/R.C. m^3			2.1	

Note:
This drawing is dimensioned in millimeters unless otherwise depicted within the drawing.

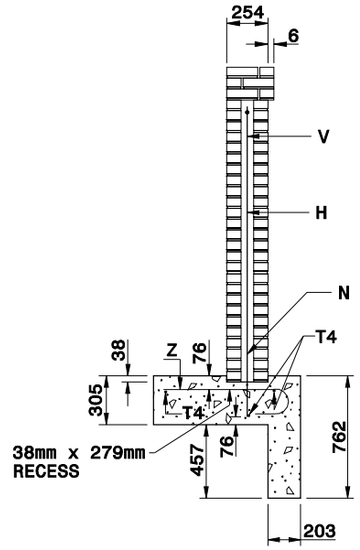

SECTION A-A

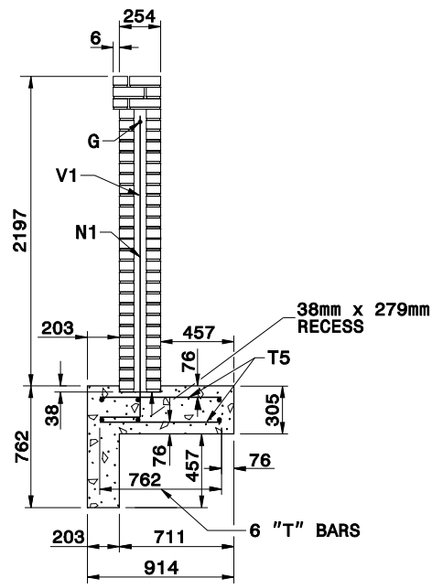

SECTION B-B

SEE STD. DWG. NO. 838.75 FOR GENERAL NOTES.

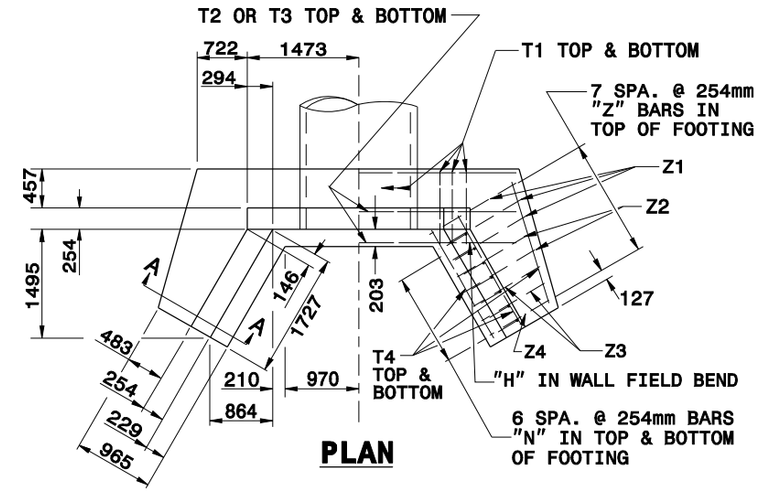

PLAN

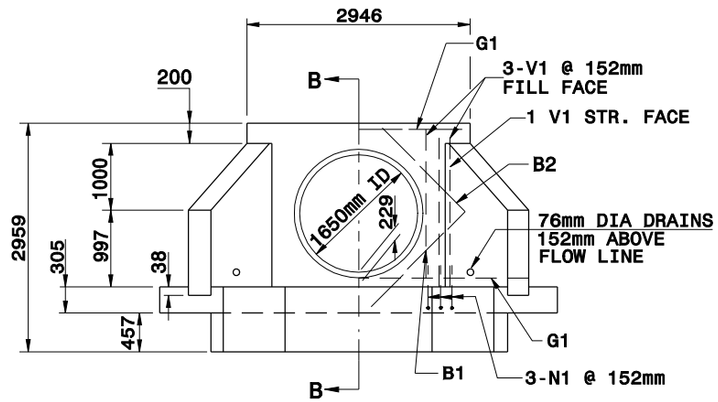

ELEVATION

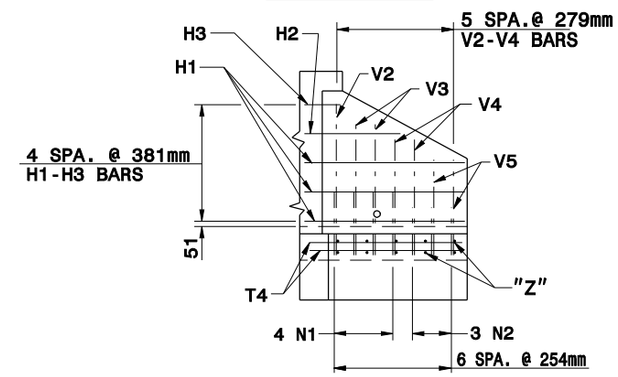

WING ELEVATION

STATE OF
NORTH CAROLINA
DEPT. OF TRANSPORTATION
DIVISION OF HIGHWAYS
RALEIGH, N.C.

7-06

METRIC STANDARD DRAWING FOR

REINFORCED BRICK ENDWALL

FOR SINGLE 1650mm PIPE - 90° SKEW

SHEET 1 OF 1
838.63