STATE OF
NORTH CAROLINA
DEPT. OF TRANSPORTATION
DIVISION OF HIGHWAYS
RALEIGH, N.C.

7-06

METRIC STANDARD DRAWING FOR

PRECAST REINFORCED CONCRETE BARRIER

1.0m SINGLE FACED

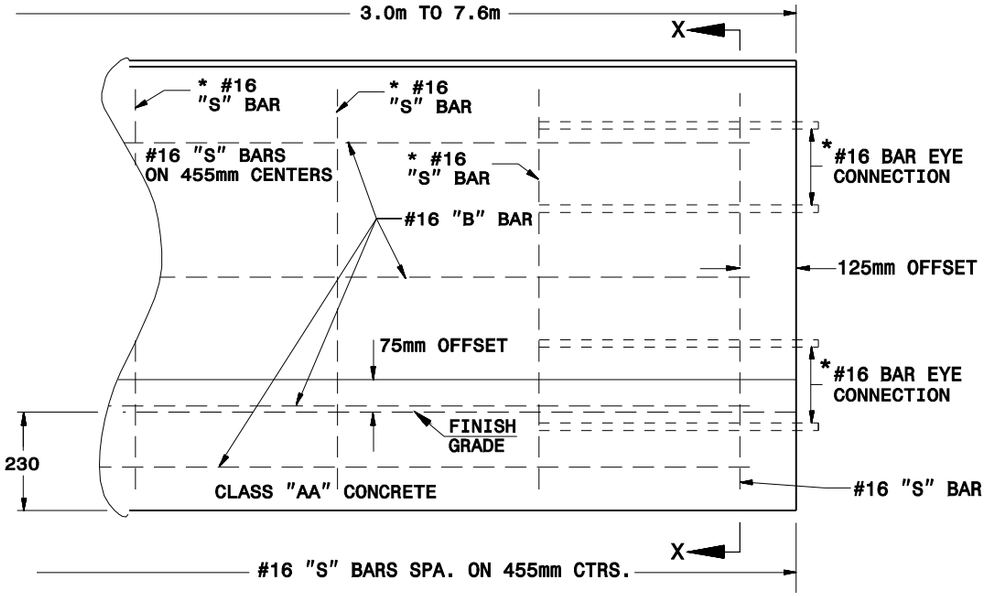

PART FRONT ELEVATION

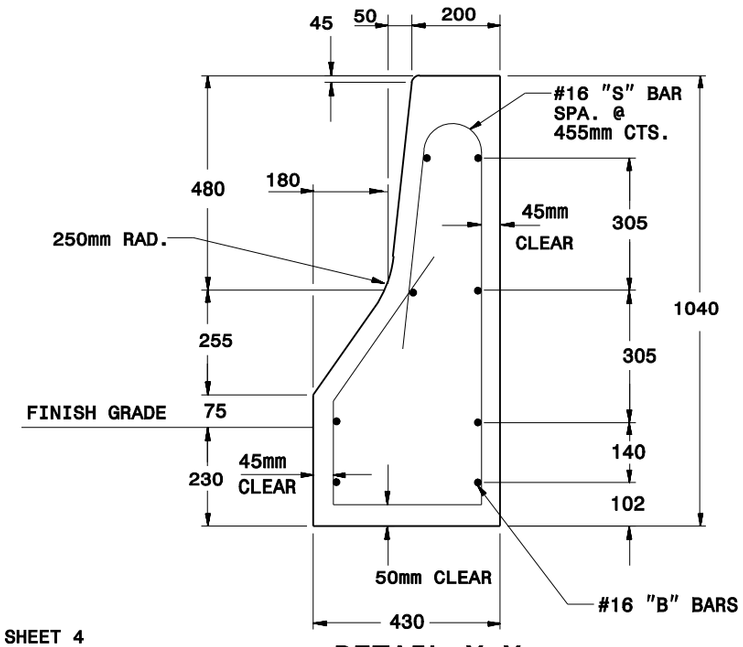

*SEE SHEET 4 FOR DIMENSIONS

DETAIL X-X
CROSS SECTIONAL VIEW

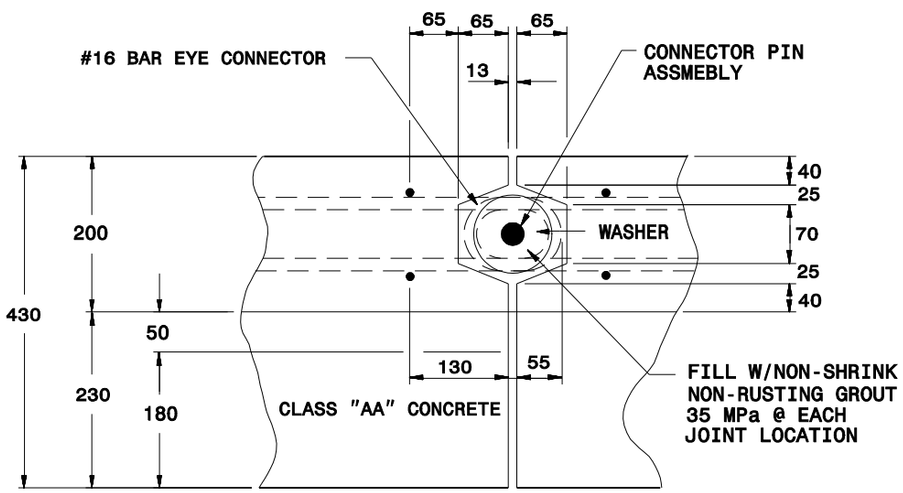

PLAN OF BONDED CONNECTION OF PRECAST UNIT

Note:
This drawing is dimensioned in millimeters unless otherwise depicted within the drawing.

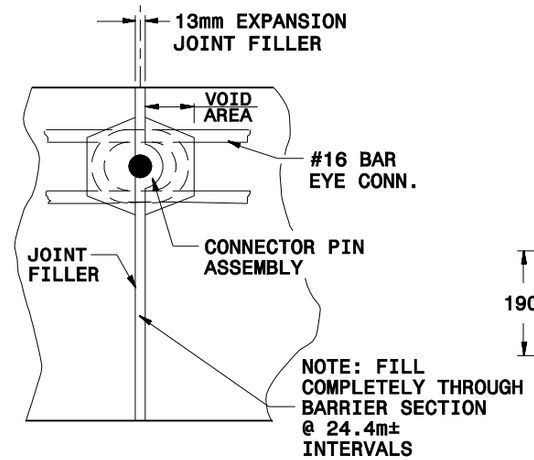

JOINT FILLER DETAIL

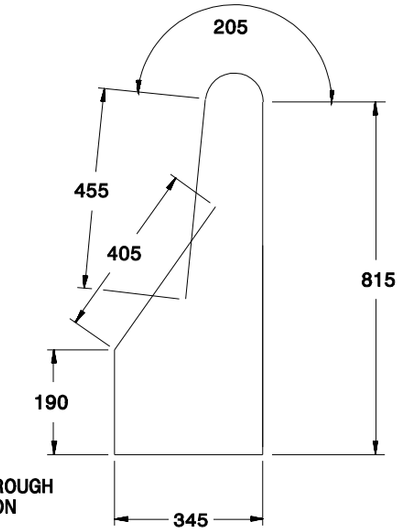

S - BARS
#16 BAR

STATE OF
NORTH CAROLINA
DEPT. OF TRANSPORTATION
DIVISION OF HIGHWAYS
RALEIGH, N.C.

7-06

METRIC STANDARD DRAWING FOR

PRECAST REINFORCED CONCRETE BARRIER

1.0m SINGLE FACED

SHEET 5 OF 8
857.01