STATE OF
NORTH CAROLINA
DEPT. OF TRANSPORTATION
DIVISION OF HIGHWAYS
RALEIGH, N.C.

1-12

ENGLISH STANDARD DRAWING FOR

CONCRETE RIGHT-OF-WAY MARKER

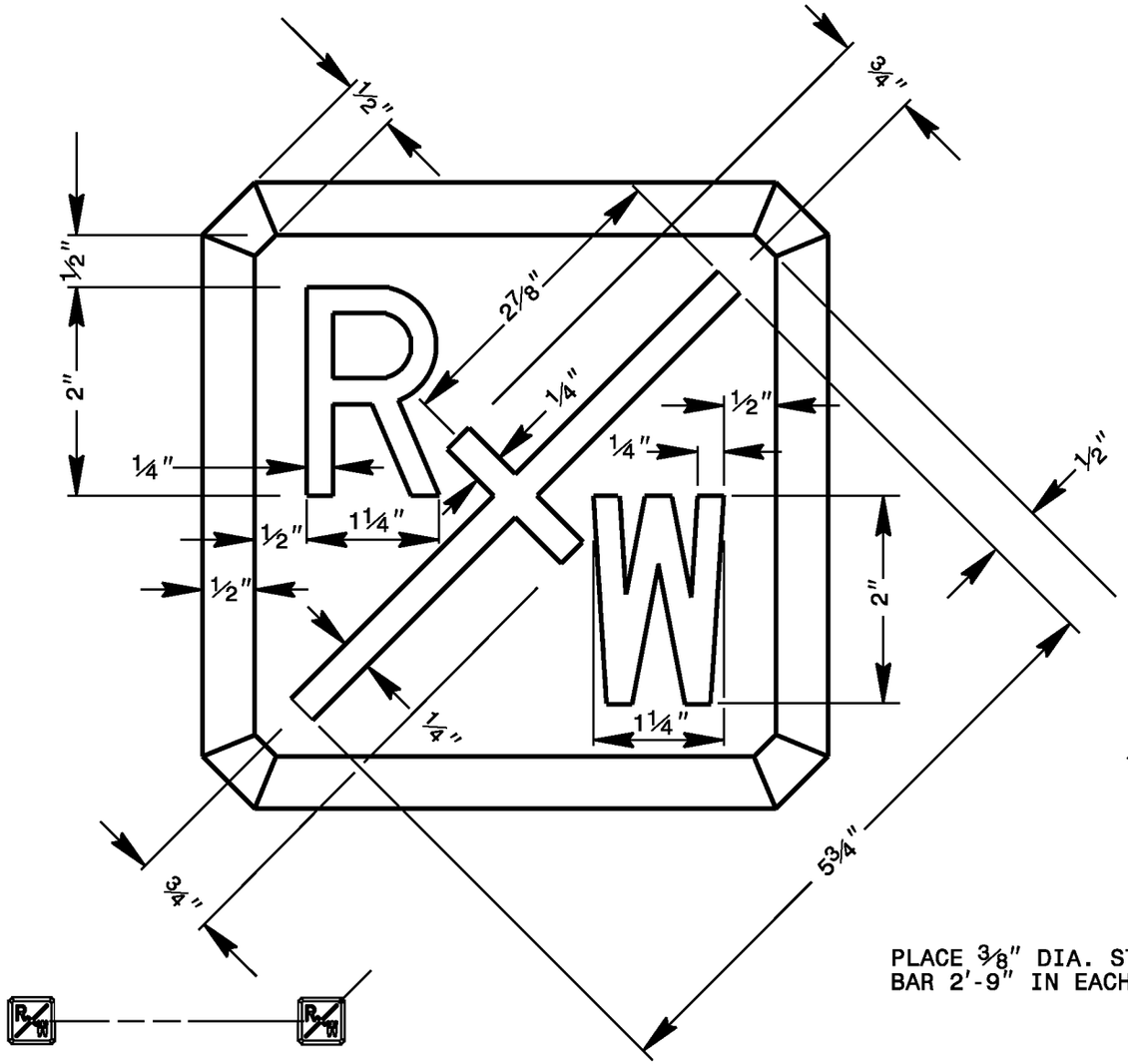

SET RIGHT-OF-WAY MARKER SO THAT THE RIGHT-OF-WAY LINE PASSES THROUGH THE INTERSECTION OF THE 'X' ON THE TOP OF THE MARKER.

NOTES:
INDENT THE LETTERS 'R/W' IN THE TOP OF EACH MARKER.
IN LOCATIONS SUCH AS LAWNS, PRIVATE ENTRANCES, DRIVES, ETC. CONSTRUCT 'R/W' MARKER FLUSH WITH THE GROUND.

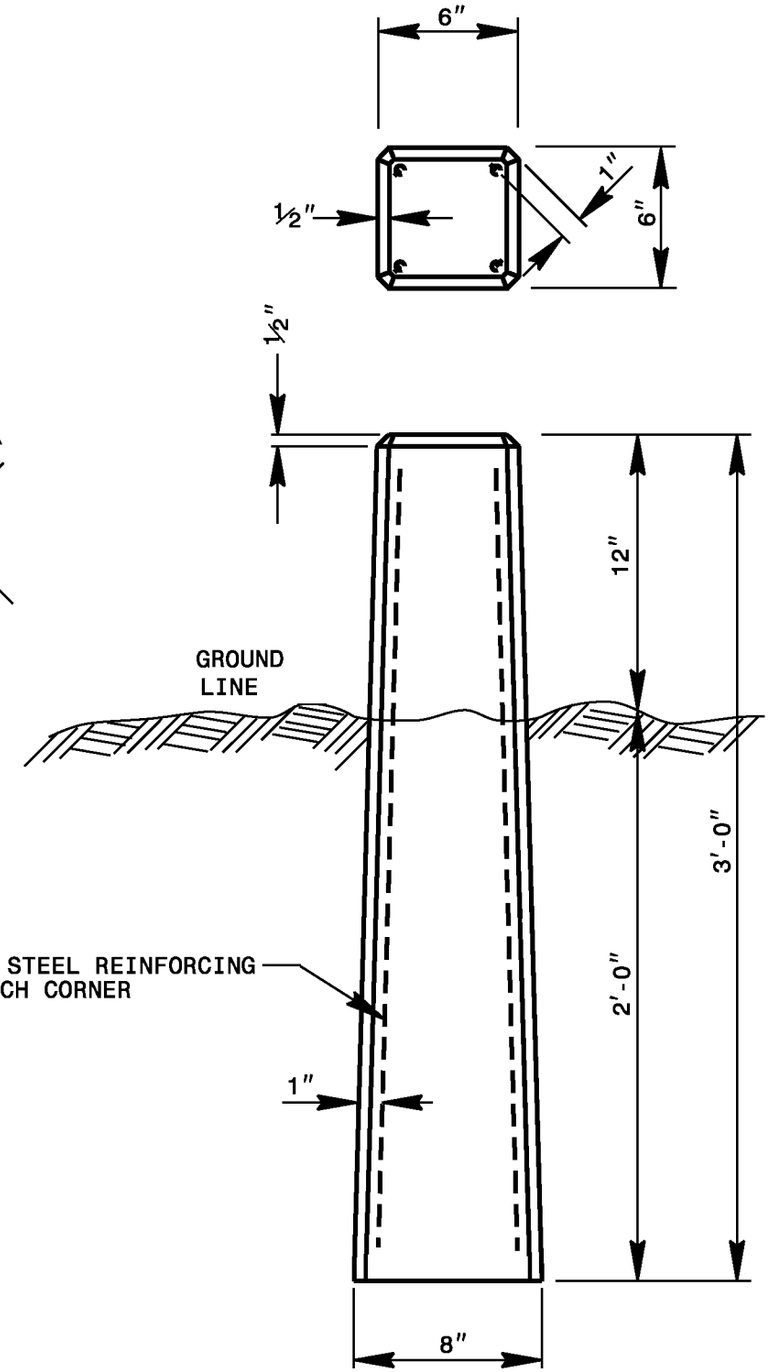

SHEET 1 OF 1

806.01

STATE OF
NORTH CAROLINA
DEPT. OF TRANSPORTATION
DIVISION OF HIGHWAYS
RALEIGH, N.C.

1-12

ENGLISH STANDARD DRAWING FOR

CONCRETE RIGHT-OF-WAY MARKER

SHEET 1 OF 1

806.01

STATE OF
NORTH CAROLINA
DEPT. OF TRANSPORTATION
DIVISION OF HIGHWAYS
RALEIGH, N.C.

1-12

ENGLISH STANDARD DRAWING FOR

GRANITE RIGHT-OF-WAY MARKER

SHEET 1 OF 1

806.02

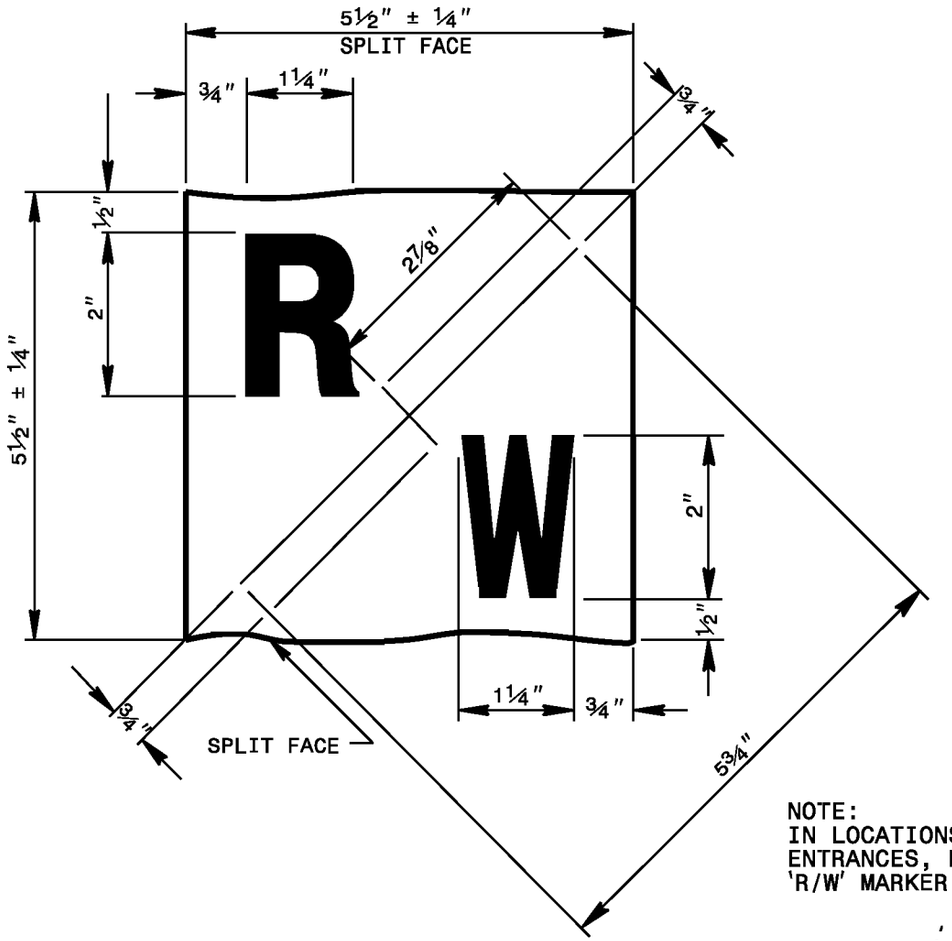

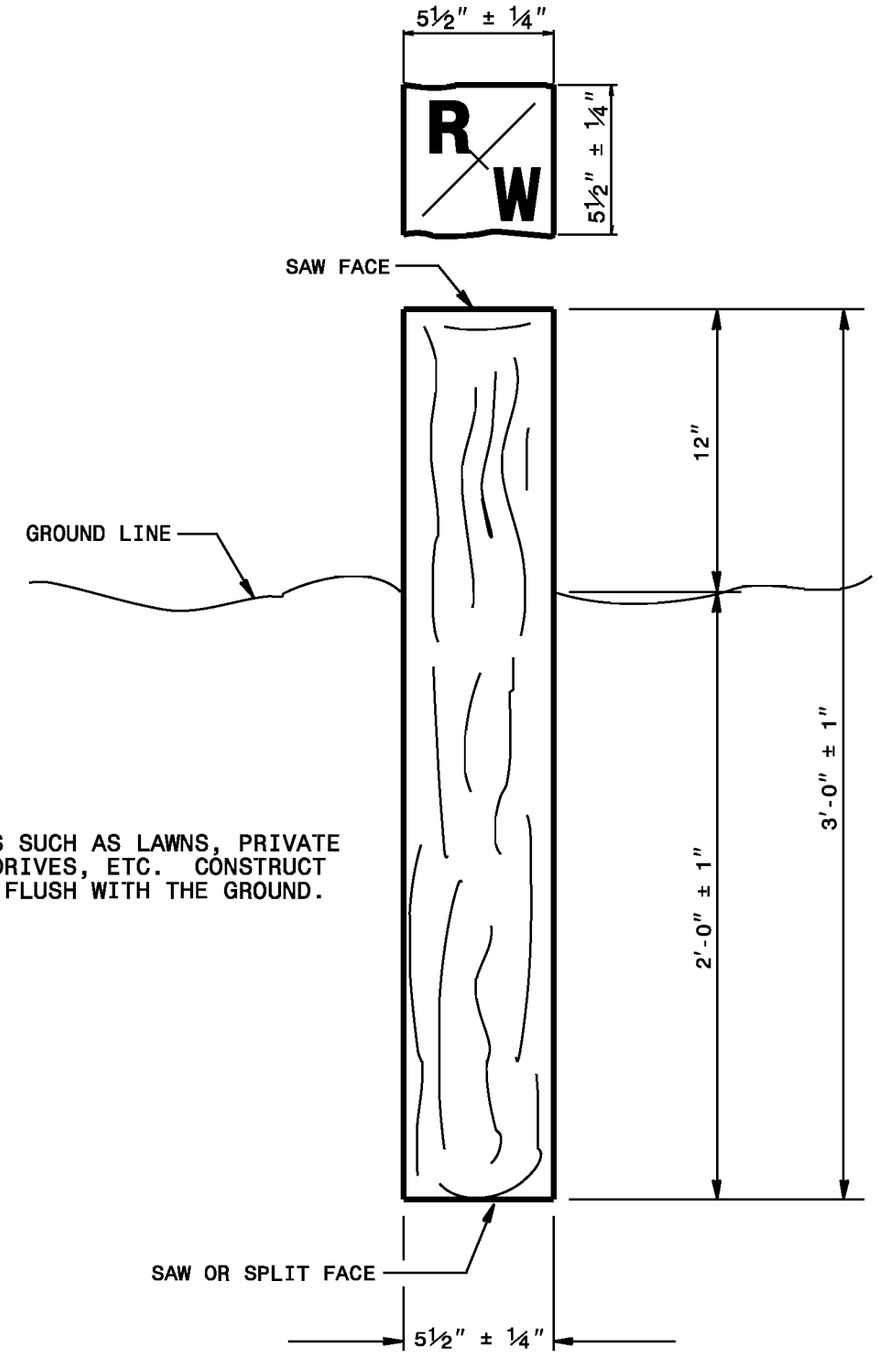

NOTE:
IN LOCATIONS SUCH AS LAWNS, PRIVATE ENTRANCES, DRIVES, ETC. CONSTRUCT 'R/W' MARKER FLUSH WITH THE GROUND.

SET RIGHT-OF-WAY MARKER SO THAT THE RIGHT-OF-WAY LINE PASSES THROUGH THE INTERSECTION OF THE 'X' ON THE TOP OF THE MARKER.

STATE OF
NORTH CAROLINA
DEPT. OF TRANSPORTATION
DIVISION OF HIGHWAYS
RALEIGH, N.C.

1-12

ENGLISH STANDARD DRAWING FOR

GRANITE RIGHT-OF-WAY MARKER

SHEET 1 OF 1

806.02

STATE OF
NORTH CAROLINA
DEPT. OF TRANSPORTATION
DIVISION OF HIGHWAYS
RALEIGH, N.C.

1-12

ENGLISH STANDARD DRAWING FOR

CONCRETE CONTROL-OF-ACCESS MARKER

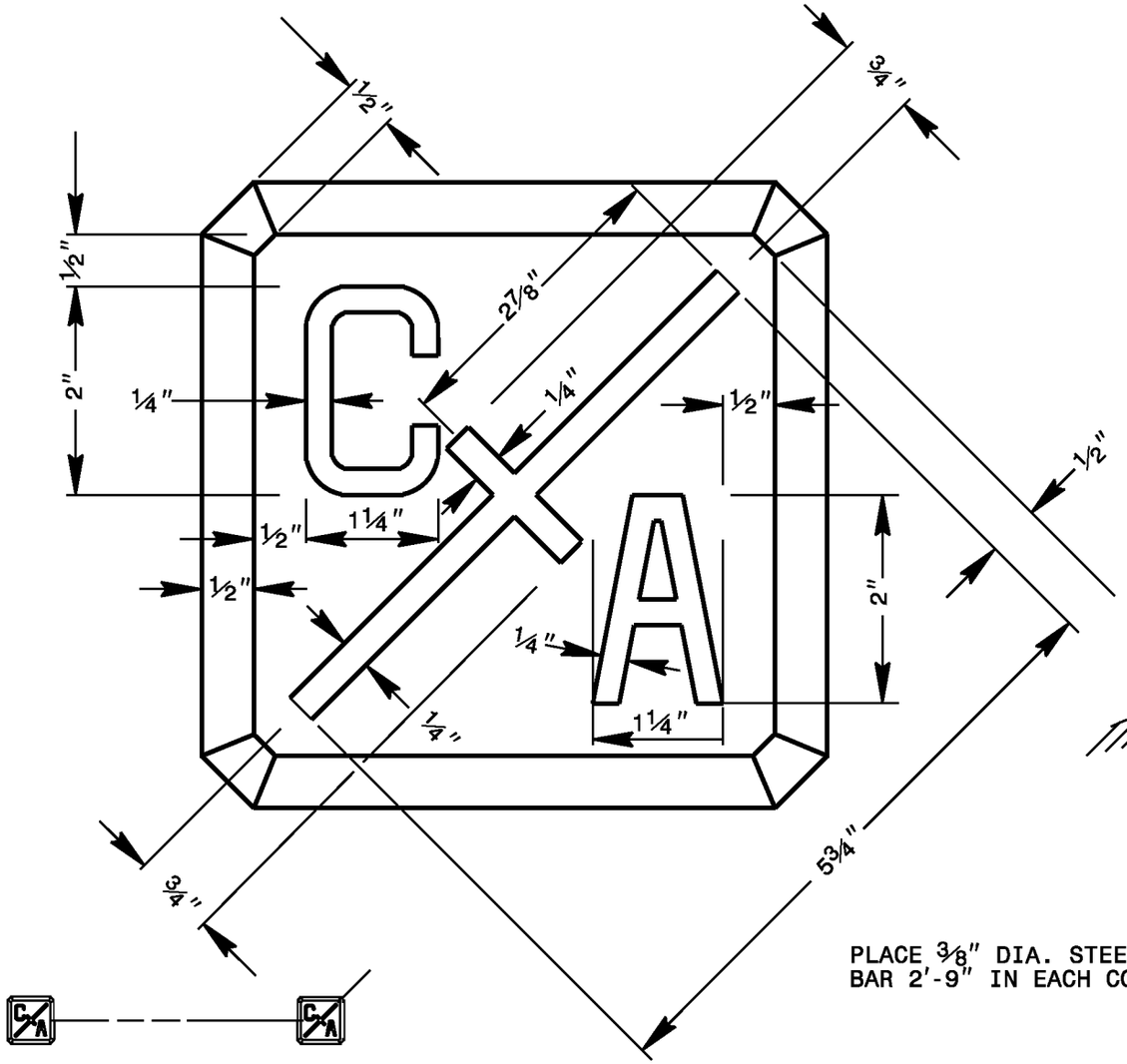

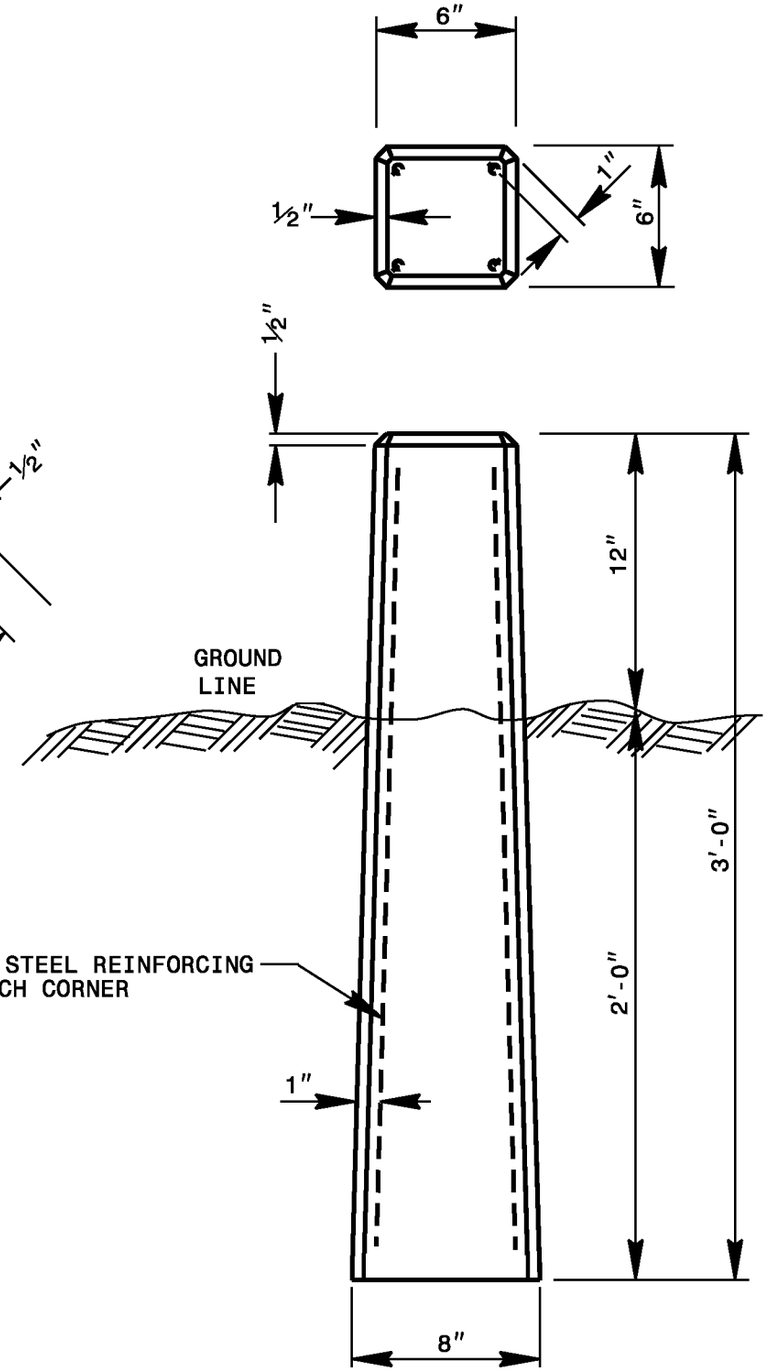

SET CONTROL-OF-ACCESS MARKER SO THAT THE CONTROL-OF-ACCESS LINE PASSES THROUGH THE INTERSECTION OF THE 'X' ON THE TOP OF THE MARKER.

NOTES:
INDENT THE LETTERS 'C/A' IN THE TOP OF EACH MARKER.
IN LOCATIONS SUCH AS LAWNS, PRIVATE ENTRANCES, DRIVES, ETC. CONSTRUCT 'C/A' MARKER FLUSH WITH THE GROUND.

SHEET 1 OF 1

806.03

STATE OF
NORTH CAROLINA
DEPT. OF TRANSPORTATION
DIVISION OF HIGHWAYS
RALEIGH, N.C.

1-12

ENGLISH STANDARD DRAWING FOR

CONCRETE CONTROL-OF-ACCESS MARKER

SHEET 1 OF 1

806.03

STATE OF NORTH CAROLINA
DEPT. OF TRANSPORTATION
DIVISION OF HIGHWAYS
RALEIGH, N.C.

1-12

ENGLISH STANDARD DRAWING FOR

SUBSURFACE DRAIN

NOTES:
REFER TO SECTION 815 OF THE STANDARD SPECIFICATIONS FOR INSTALLATION DEPTHS OF DRAINAGE PIPES.

CONNECT PIPE OUTLET INTO DRAINAGE STRUCTURE WHEREVER POSSIBLE. IF NOT CONNECTED TO DRAINAGE STRUCTURE, PROTECT END OF PIPE BY CONCRETE PAD FOR OUTLET END OF DRAIN. PADS ARE NEEDED AT LOCATIONS WHERE PIPE IS NOT PLACED IN DRAINAGE STRUCTURE TO FACILITATE MAINTENANCE AND AID IN IDENTIFICATION. OUTLETS ARE REQUIRED EVERY 500′ OR AS DIRECTED BY THE ENGINEER

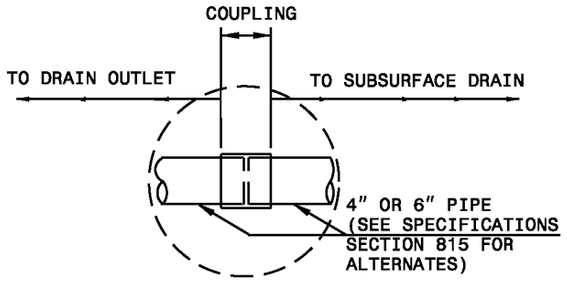

AUXILIARY VIEW

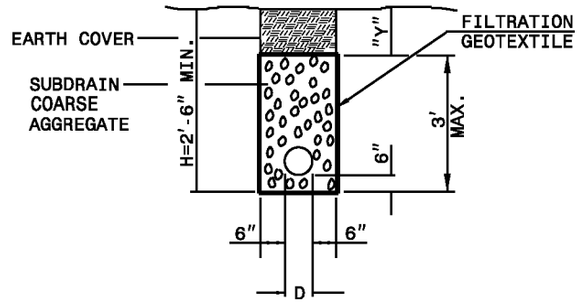

SUBSURFACE DRAIN

Y = 12″ WHEN "H" IS 4′-0″ OR LESS
Y = VARIABLE WHEN "H" IS OVER 4′-0″

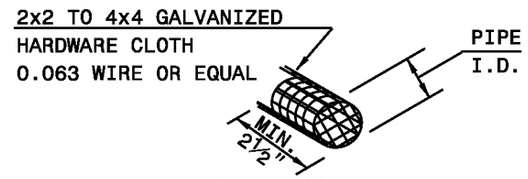

RODENT SCREEN

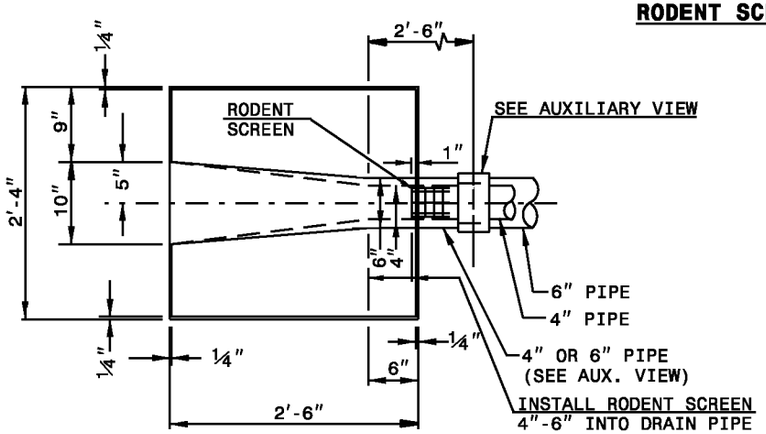

PLAN VIEW

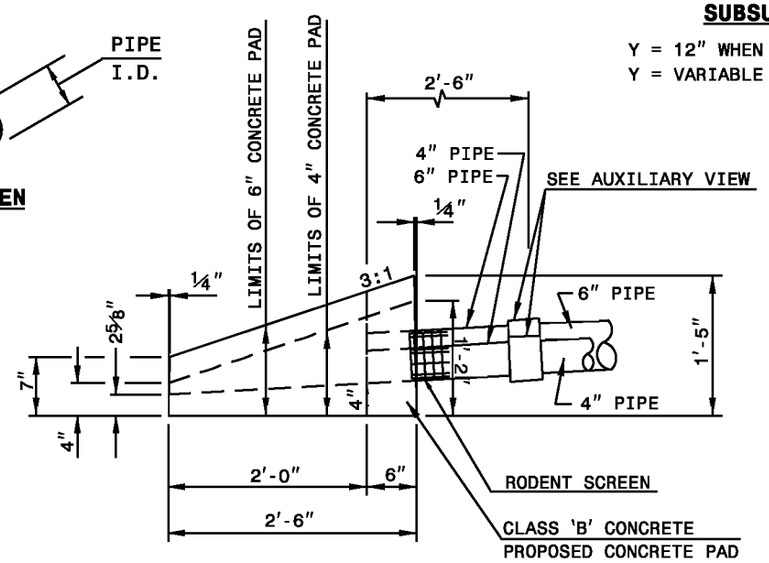

ELEVATION VIEW

SUBDRAIN QUANTITIES
EXCAV. OR COURSE AGGREGATE CU. YDS. PER FT. DEPTH/LIN. FT.
0.056

THE CONCRETE PAD CONSISTS OF 4″ DRAIN 0.137 CUBIC YARDS, 6″ DRAIN 0.177 CUBIC YARDS CLASS "B" CONCRETE.

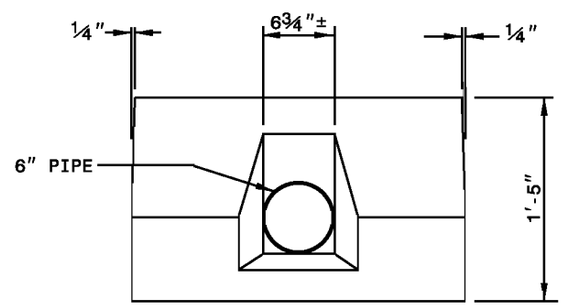

END ELEVATION VIEW

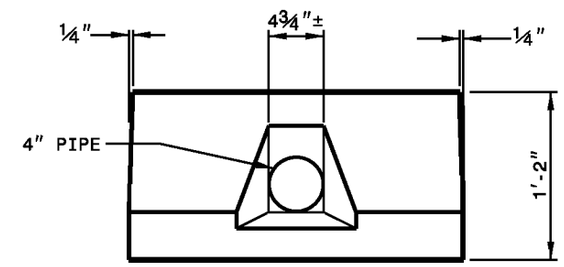

END ELEVATION VIEW

SHEET 1 OF 1
815.02

STATE OF NORTH CAROLINA
DEPT. OF TRANSPORTATION
DIVISION OF HIGHWAYS
RALEIGH, N.C.

1-12

ENGLISH STANDARD DRAWING FOR

SUBSURFACE DRAIN

SHEET 1 OF 1
815.02

STATE OF NORTH CAROLINA
DEPT. OF TRANSPORTATION
DIVISION OF HIGHWAYS
RALEIGH, N.C.

1-12

ENGLISH STANDARD DRAWING FOR

PIPE UNDERDRAIN AND BLIND DRAIN

NOTES:
REFER TO SECTION 815 OF THE STANDARD SPECIFICATIONS FOR INSTALLATION DEPTHS OF DRAINAGE PIPES.

CONNECT PIPE OUTLET INTO DRAINAGE STRUCTURE WHEREVER POSSIBLE. IF NOT CONNECTED TO DRAINAGE STRUCTURE, PROTECT END OF PIPE BY CONCRETE PAD FOR OUTLET END OF DRAIN. PADS ARE NEEDED AT LOCATIONS WHERE PIPE IS NOT PLACED IN DRAINAGE STRUCTURE TO FACILITATE MAINTENANCE AND AID IN IDENTIFICATION. OUTLETS ARE REQUIRED EVERY 500' OR AS DIRECTED BY THE ENGINEER

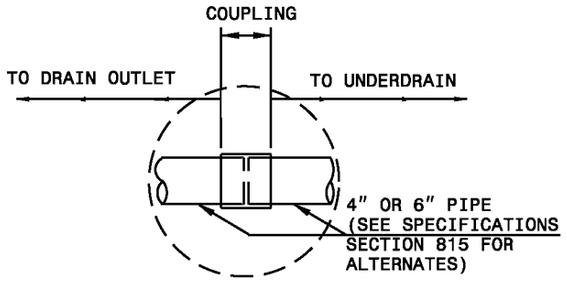

AUXILIARY VIEW

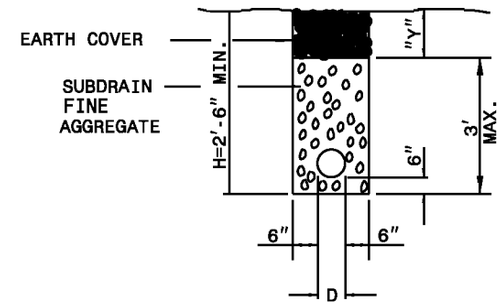

PIPE UNDERDRAIN

Y = 12" WHEN "H" IS 4'-0" OR LESS
Y = VARIABLE WHEN "H" IS OVER 4'-0"

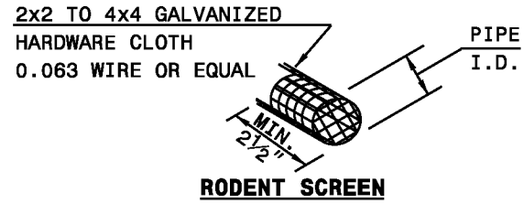

RODENT SCREEN

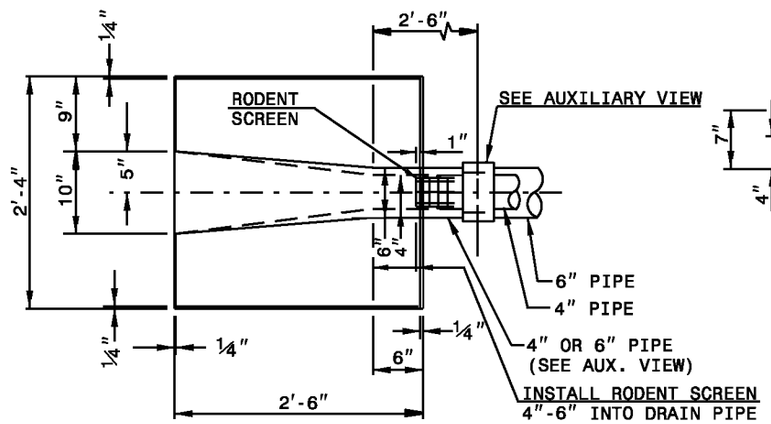

PLAN VIEW

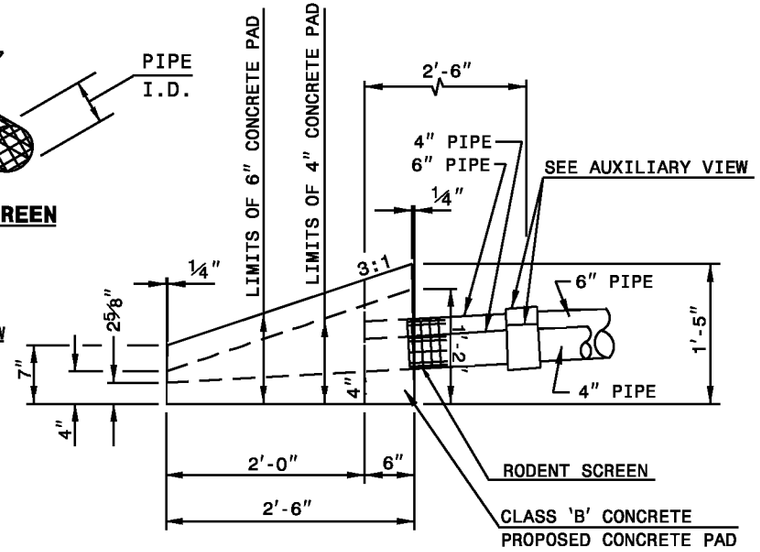

ELEVATION VIEW

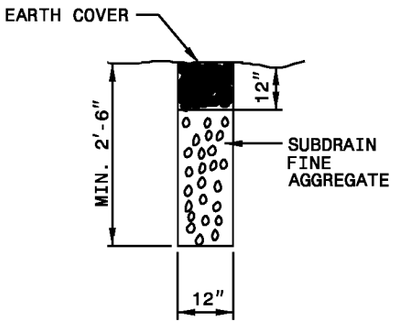

BLIND DRAIN

SUBDRAIN QUANTITIES	
TYPE	EXCAV. OR FINE AGGR. CU. YDS. PER FT. DEPTH/LIN. FT.
UNDER DRAIN	0.056
BLIND DRAIN	0.037

THE CONCRETE PAD CONSISTS OF 4" DRAIN 0.137 CUBIC YARDS, 6" DRAIN 0.177 CUBIC YARDS CLASS "B" CONCRETE.

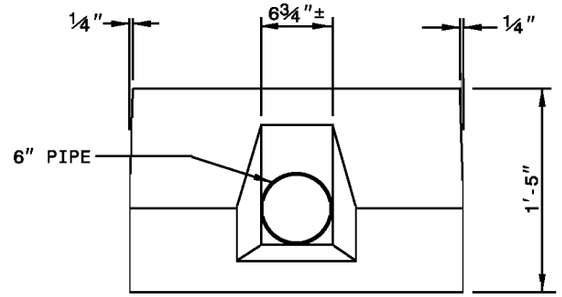

END ELEVATION VIEW

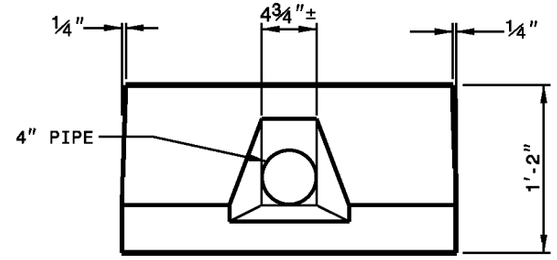

END ELEVATION VIEW

STATE OF NORTH CAROLINA
DEPT. OF TRANSPORTATION
DIVISION OF HIGHWAYS
RALEIGH, N.C.

1-12

ENGLISH STANDARD DRAWING FOR

PIPE UNDERDRAIN AND BLIND DRAIN

SHEET 1 OF 1
815.03

STATE OF
NORTH CAROLINA
DEPT. OF TRANSPORTATION
DIVISION OF HIGHWAYS
RALEIGH, N.C.

1-12

ENGLISH STANDARD DRAWING FOR
CONCRETE PADS
FOR SHOULDER DRAIN INSTALLATION

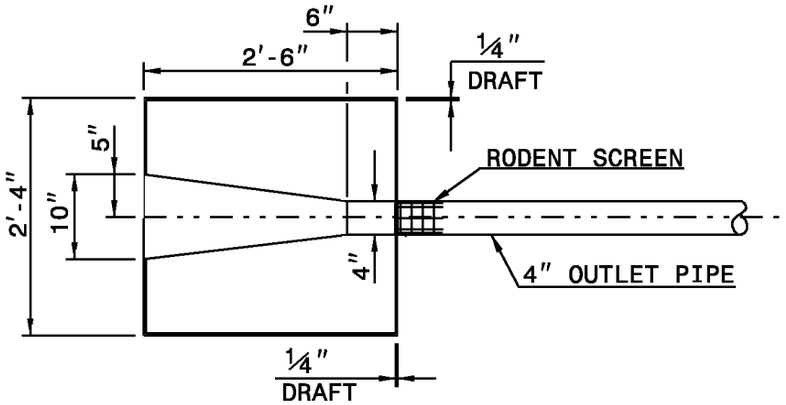

PLAN VIEW

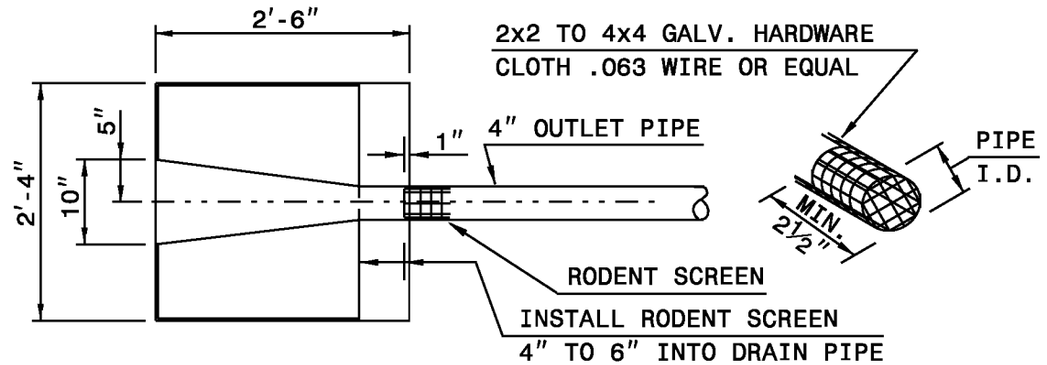

TOP VIEW

PARTIAL DETAIL OF RODENT SCREEN

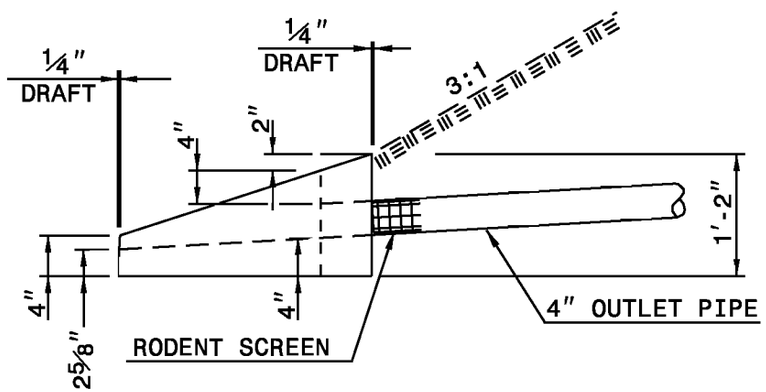

ELEVATION VIEW

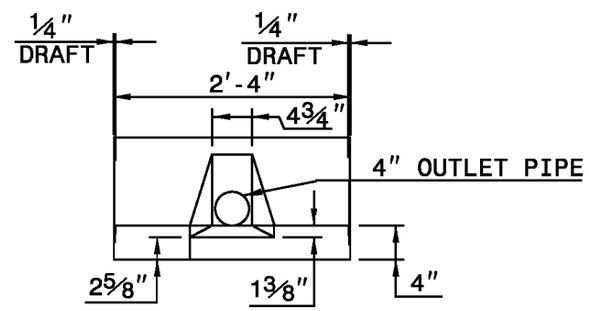

END ELEVATION VIEW

THE CONCRETE PAD CONSISTS OF 0.137 CUBIC YARDS OF CLASS "B" CONCRETE.

SHEET 1 OF 1
816.01

STATE OF
NORTH CAROLINA
DEPT. OF TRANSPORTATION
DIVISION OF HIGHWAYS
RALEIGH, N.C.

1-12

ENGLISH STANDARD DRAWING FOR
CONCRETE PADS
FOR SHOULDER DRAIN INSTALLATION

SHEET 1 OF 1
816.01

STATE OF
NORTH CAROLINA
DEPT. OF TRANSPORTATION
DIVISION OF HIGHWAYS
RALEIGH, N.C.

1-12

ENGLISH STANDARD DRAWING FOR

AGGREGATE SHOULDER DRAIN

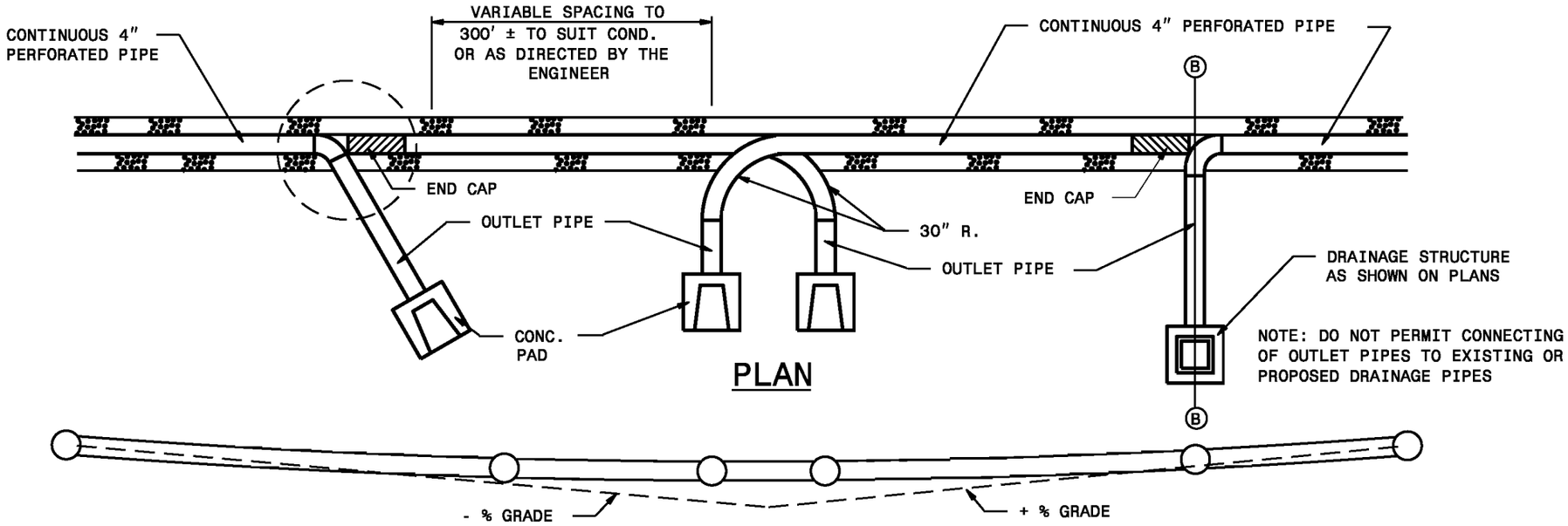

PLAN

PROFILE

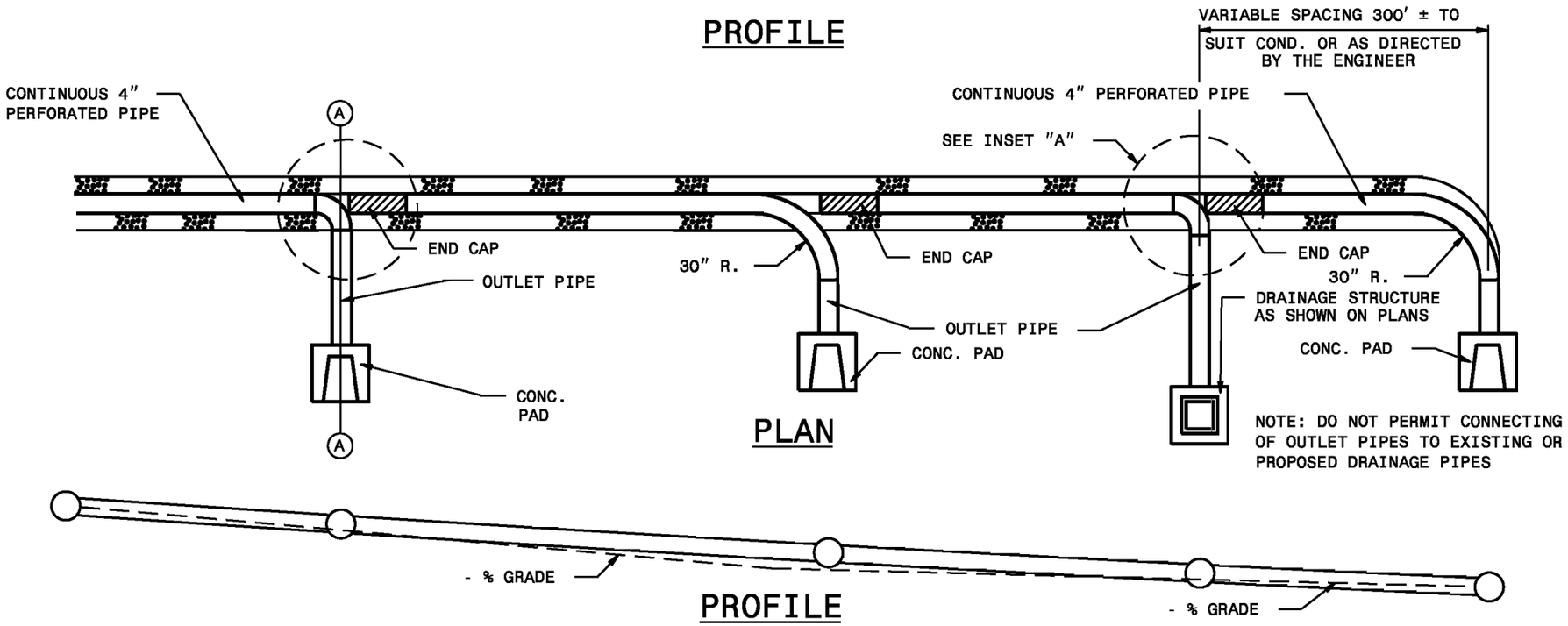

PLAN

PROFILE

SHEET 1 OF 2

816.02

STATE OF
NORTH CAROLINA
DEPT. OF TRANSPORTATION
DIVISION OF HIGHWAYS
RALEIGH, N.C.

1-12

ENGLISH STANDARD DRAWING FOR

AGGREGATE SHOULDER DRAIN

SHEET 1 OF 2

816.02

STATE OF
NORTH CAROLINA
DEPT. OF TRANSPORTATION
DIVISION OF HIGHWAYS
RALEIGH, N.C.

1-12

ENGLISH STANDARD DRAWING FOR
AGGREGATE SHOULDER DRAIN

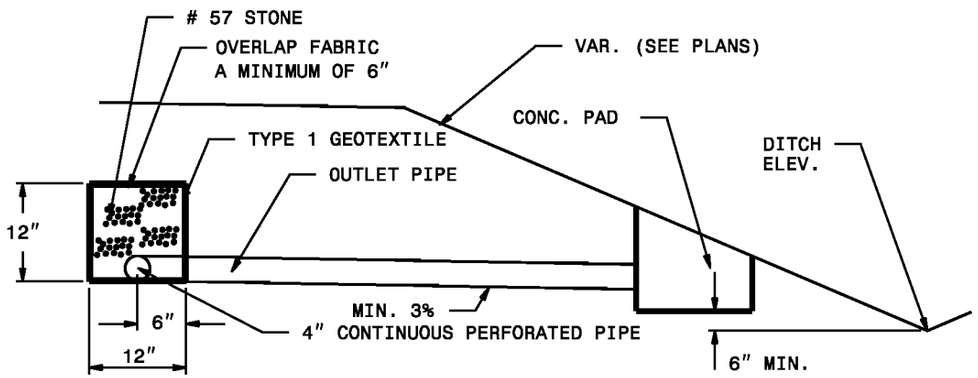

TYPICAL SECTION A-A

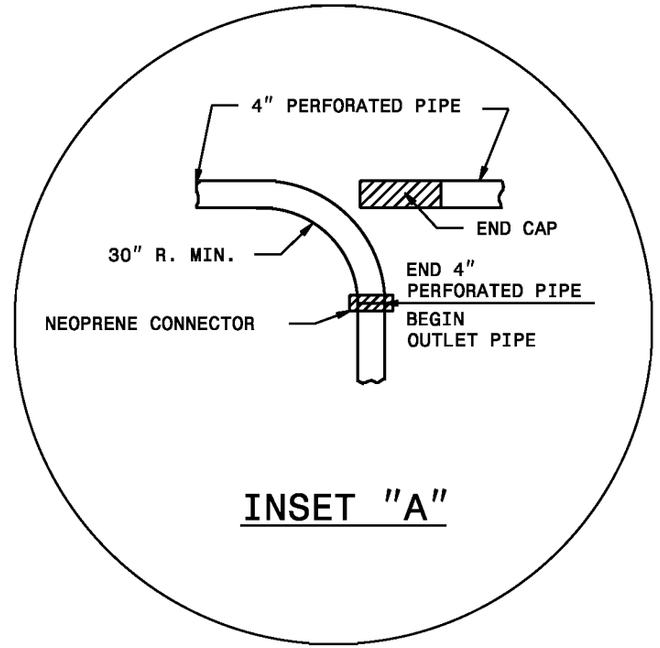

INSET "A"

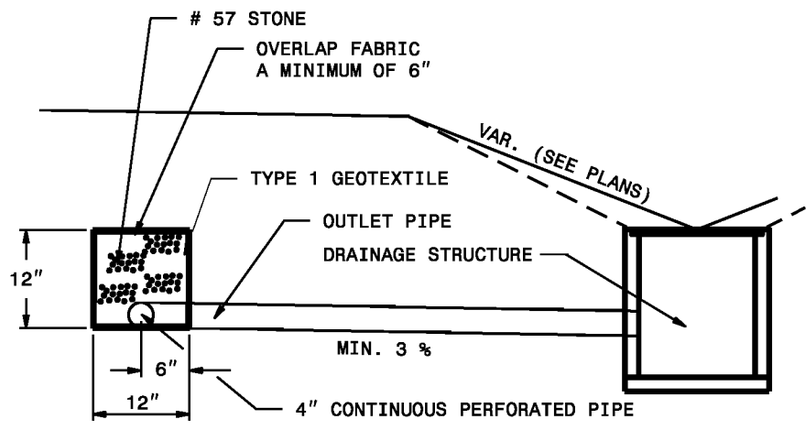

TYPICAL SECTION B-B

GENERAL NOTES:

USE THE FOLLOWING CRITERIA AS A GUIDE FOR THE LOCATION, QUANTITY AND INSTALLATION OF AGGREGATE SHOULDER DRAIN.

(1) INSTALL ON LOW SIDE OF PAVEMENT IN AREAS WITH GRADES FLATTER THAN 1% , AND SAG VERTICAL CURVES.

(2) OTHER LOCATIONS AS DIRECTED BY THE ENGINEER.

(3) PLACE OUTLETS AT THE LOW POINTS AND SPACE AS SHOWN ON THE PLAN VIEW.

(4) CONNECT OUTLET PIPE INTO DRAINAGE STUCTURE WHERE POSSIBLE. IF NOT CONNECTED TO DRAINAGE STRUCTURE, PROTECT END OF PIPE BY CONCRETE PAD. SEE DETAIL OF CONCRETE PAD.

(5) OUTLET PIPE GRADE MIN. 3%.

STATE OF
NORTH CAROLINA
DEPT. OF TRANSPORTATION
DIVISION OF HIGHWAYS
RALEIGH, N.C.

1-12

ENGLISH STANDARD DRAWING FOR
AGGREGATE SHOULDER DRAIN

SHEET 2 OF 2
816.02

STATE OF
NORTH CAROLINA
DEPT. OF TRANSPORTATION
DIVISION OF HIGHWAYS
RALEIGH, N.C.

1-12

ENGLISH STANDARD DRAWING FOR

GEOCOMPOSITE SHOULDER DRAIN

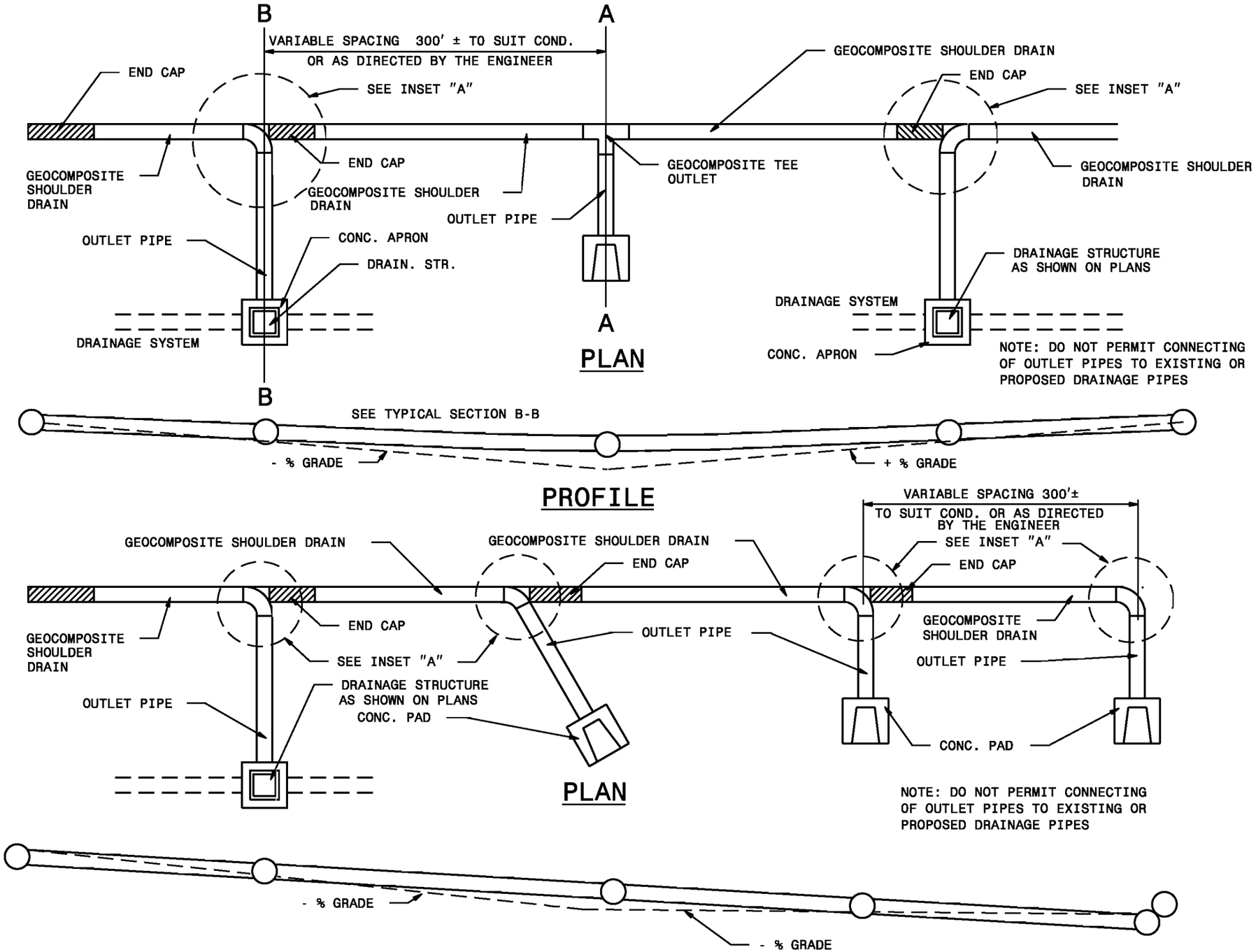

SHEET 1 OF 2

816.03

STATE OF
NORTH CAROLINA
DEPT. OF TRANSPORTATION
DIVISION OF HIGHWAYS
RALEIGH, N.C.

1-12

ENGLISH STANDARD DRAWING FOR

GEOCOMPOSITE SHOULDER DRAIN

SHEET 1 OF 2

816.03

STATE OF
NORTH CAROLINA
DEPT. OF TRANSPORTATION
DIVISION OF HIGHWAYS
RALEIGH, N.C.

1-12

ENGLISH STANDARD DRAWING FOR

GEOCOMPOSITE SHOULDER DRAIN

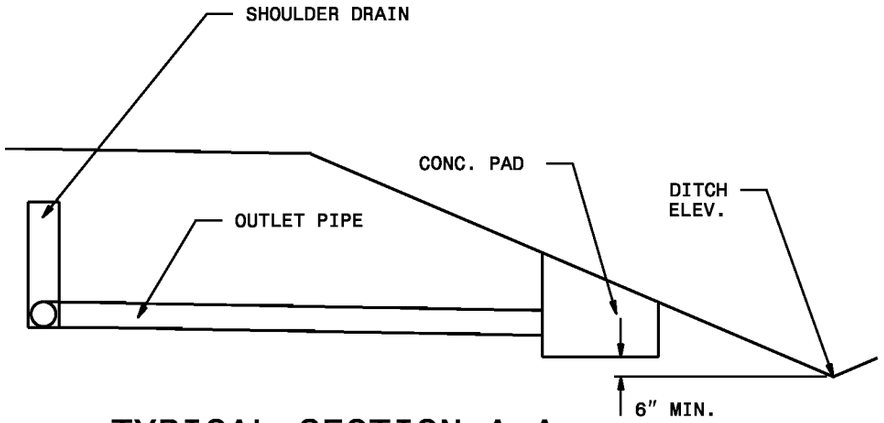

TYPICAL SECTION A-A

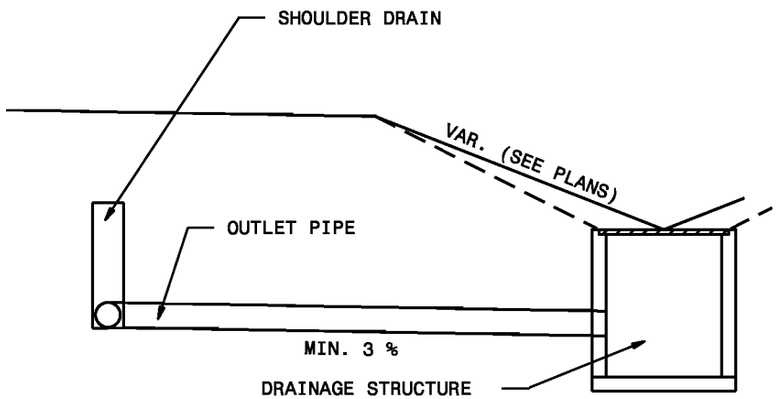

TYPICAL SECTION B-B

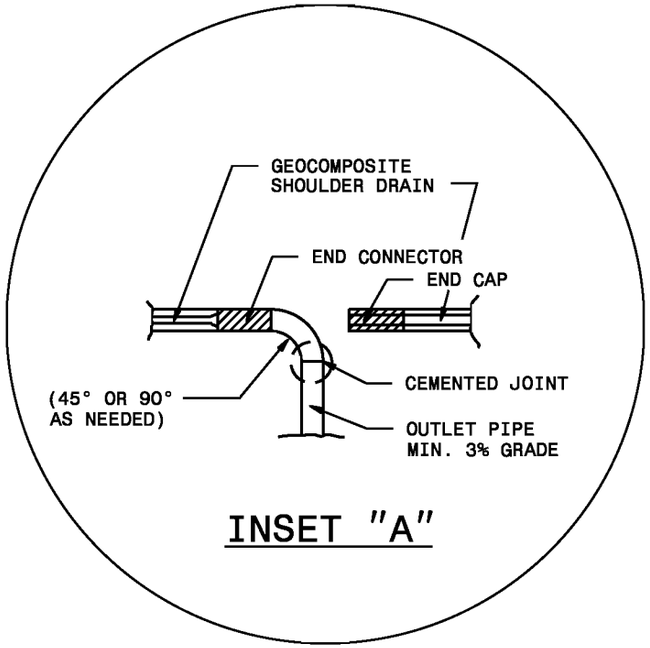

INSET "A"

GENERAL NOTES:

USE THE FOLLOWING CRITERIA AS A GUIDE FOR THE LOCATION, QUANTITY AND INSTALLATION OF GEOCOMPOSITE SHOULDER DRAIN.

(1) INSTALL ON LOW SIDE OF PAVEMENT IN AREAS WITH GRADES FLATTER THAN 1% ± AND SAG VERTICAL CURVES.

(2) OTHER LOCATIONS AS DIRECTED BY THE ENGINEER.

(3) PLACE OUTLETS AT THE LOW POINTS AND SPACE AS SHOWN ON THE PLAN VIEW.

(4) CONNECT OUTLET PIPE INTO DRAINAGE STUCTURE WHERE POSSIBLE. IF NOT CONNECTED TO DRAINAGE STRUCTURE, PROTECT END OF PIPE BY CONCRETE PAD. SEE DETAIL OF CONCRETE PAD.

(5) PROVIDE 4" SCH. 40 PVC PIPE FOR OUTLET.

(6) OUTLET PIPE GRADE MIN. 3%.

1-12

STATE OF
NORTH CAROLINA
DEPT. OF TRANSPORTATION
DIVISION OF HIGHWAYS
RALEIGH, N.C.

ENGLISH STANDARD DRAWING FOR

GEOCOMPOSITE SHOULDER DRAIN

SHEET 2 OF 2
816.03

STATE OF
NORTH CAROLINA
DEPT. OF TRANSPORTATION
DIVISION OF HIGHWAYS
RALEIGH, N.C.

1-12

ENGLISH STANDARD DRAWING FOR

MARKERS FOR DRAINAGE STRUCTURE AND CONCRETE PAD

SHEET 1 OF 2

816.04

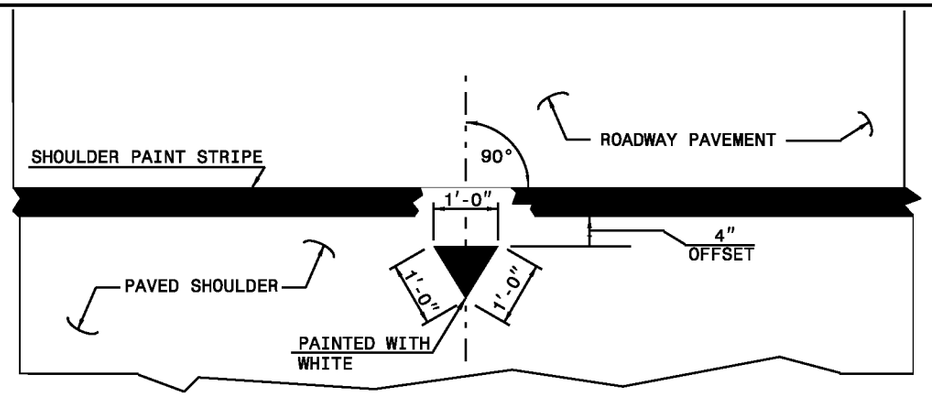

INSET "A"

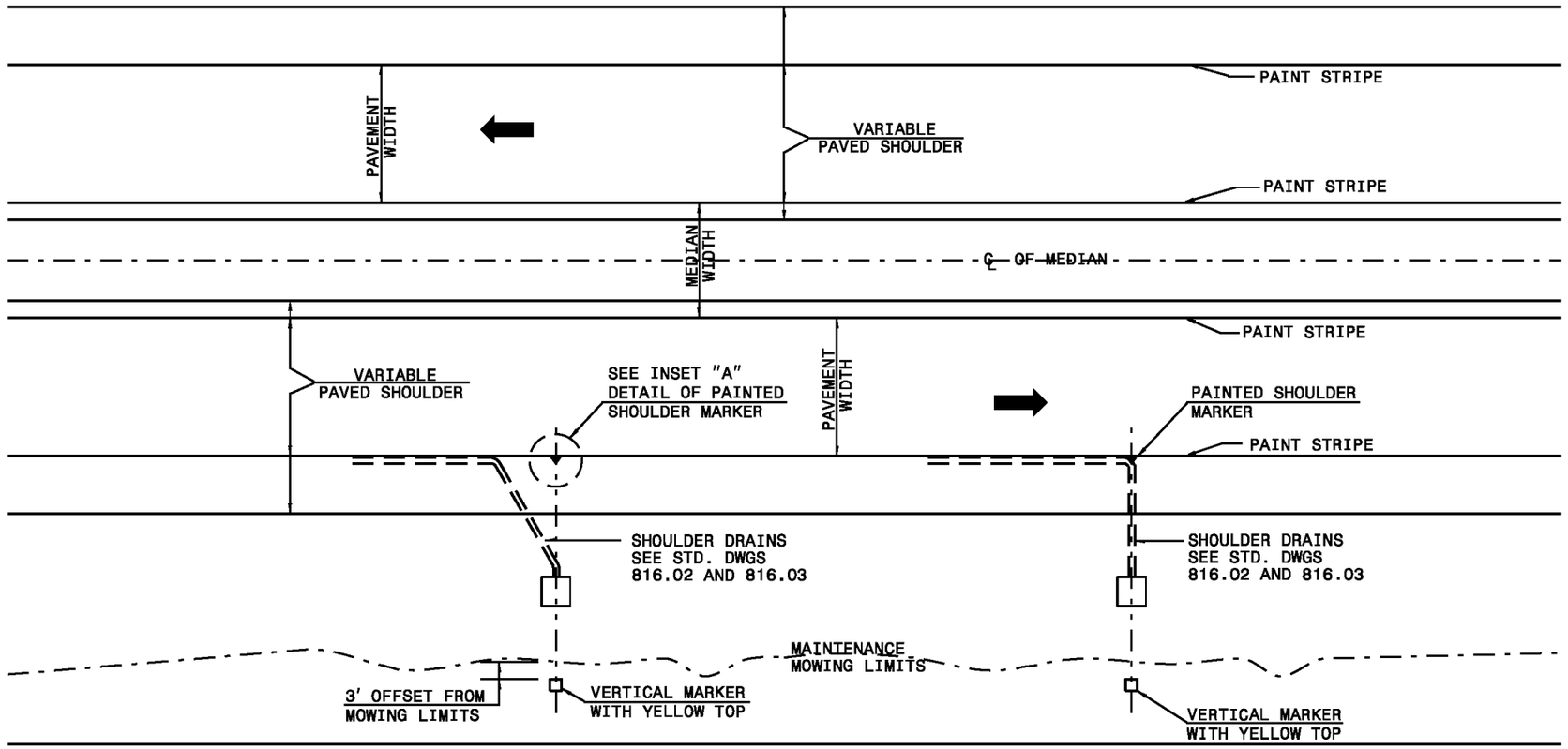

PAINTED SHOULDER AND VERTICAL MARKER

STATE OF
NORTH CAROLINA
DEPT. OF TRANSPORTATION
DIVISION OF HIGHWAYS
RALEIGH, N.C.

1-12

ENGLISH STANDARD DRAWING FOR

MARKERS FOR DRAINAGE STRUCTURE AND CONCRETE PAD

SHEET 1 OF 2

816.04

STATE OF
NORTH CAROLINA
DEPT. OF TRANSPORTATION
DIVISION OF HIGHWAYS
RALEIGH, N.C.

1-12

ENGLISH STANDARD DRAWING FOR

MARKERS FOR DRAINAGE STRUCTURE AND CONCRETE PAD

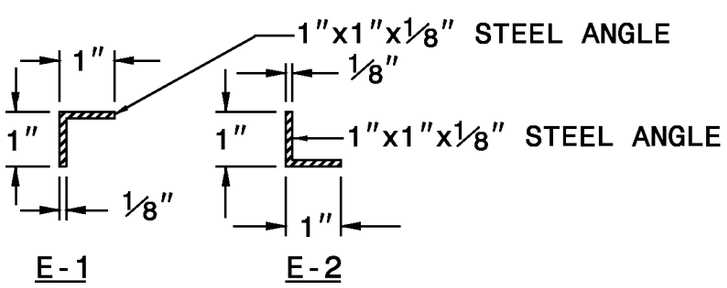

PLAN

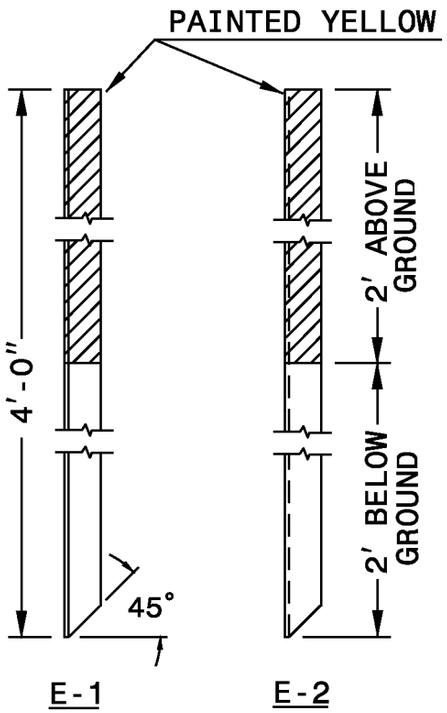

ELEVATION

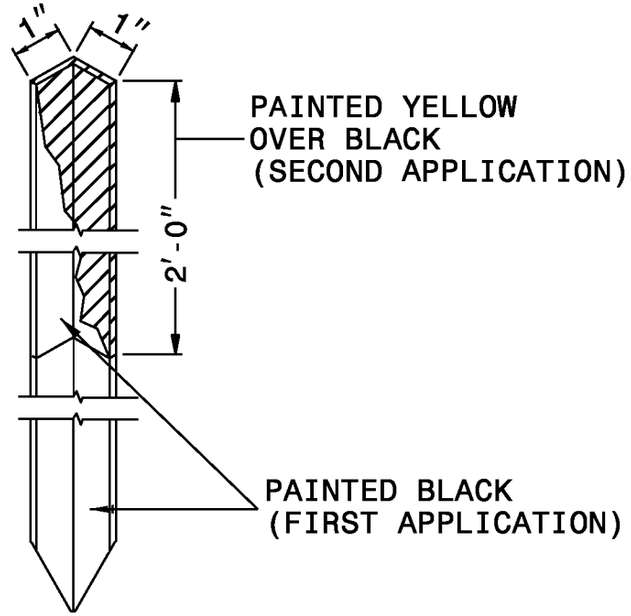

ISOMETRIC VIEW

LEGEND

YELLOW PAINT

BLACK PAINT

GENERAL NOTES:

USE A36 GRADE STEEL. USE FLAT BLACK PAINT AS FIRST APPLICATION.

USE YELLOW AS SECOND APPLICATION FOR THE TOP HALF OF THE MARKER. USE EXTERIOR OIL BASE FOR ALL PAINT.

USE MARKERS FOR SUBSURFACE AND SHOULDER DRAIN CONCRETE PADS. PLACE MARKERS FOR OUTLETS AT DRAINAGE STRUCTURES WHERE APPLICABLE.

SHEET 2 OF 2

816.04

STATE OF
NORTH CAROLINA
DEPT. OF TRANSPORTATION
DIVISION OF HIGHWAYS
RALEIGH, N.C.

1-12

ENGLISH STANDARD DRAWING FOR

MARKERS FOR DRAINAGE STRUCTURE AND CONCRETE PAD

SHEET 2 OF 2

816.04

STATE OF
NORTH CAROLINA
DEPT. OF TRANSPORTATION
DIVISION OF HIGHWAYS
RALEIGH, N.C.

1-12

ENGLISH STANDARD DRAWING FOR

FUNNEL AND FUNNEL DRAIN

12" METAL FUNNEL

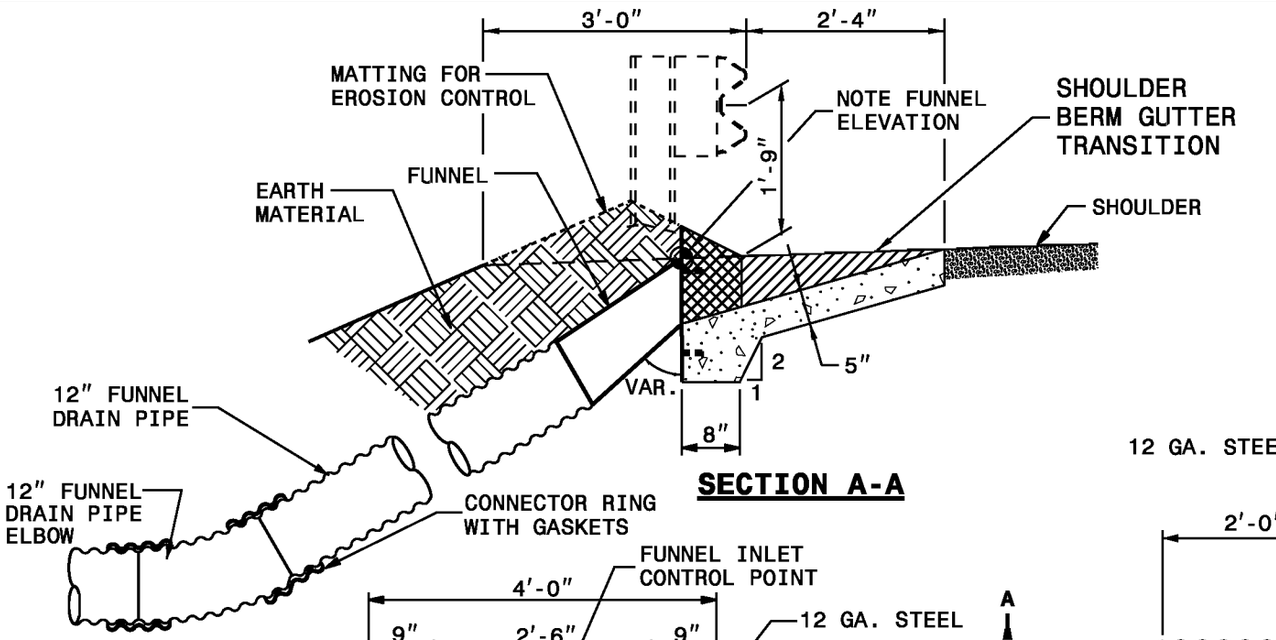

SECTION A-A

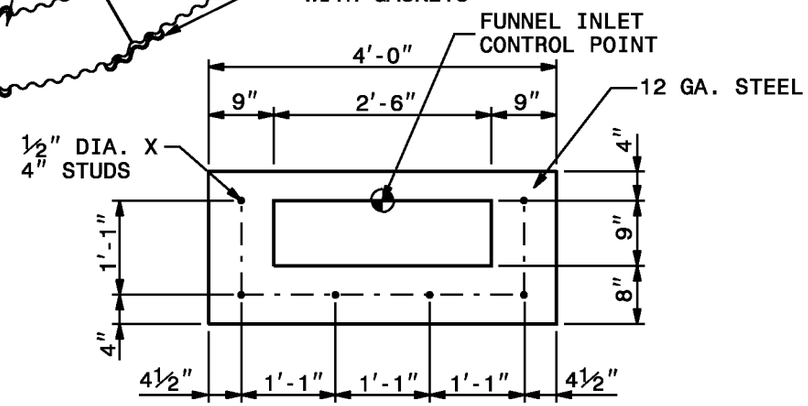

FUNNEL ELEVATION

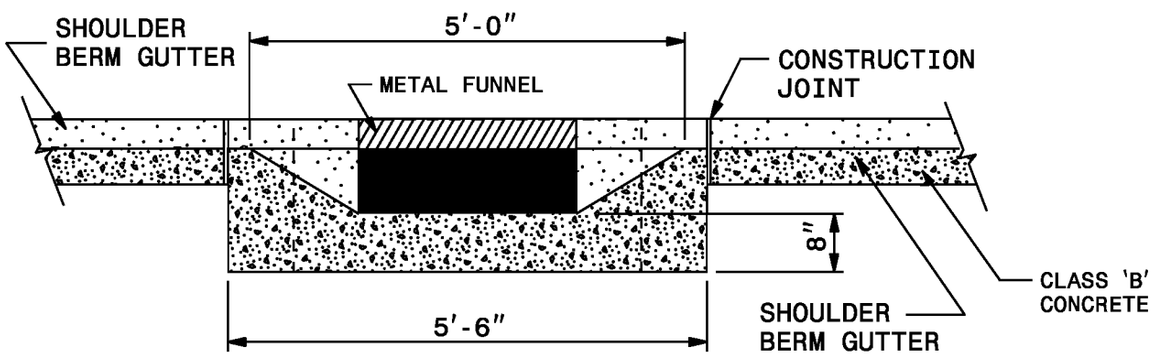

FRONT VIEW

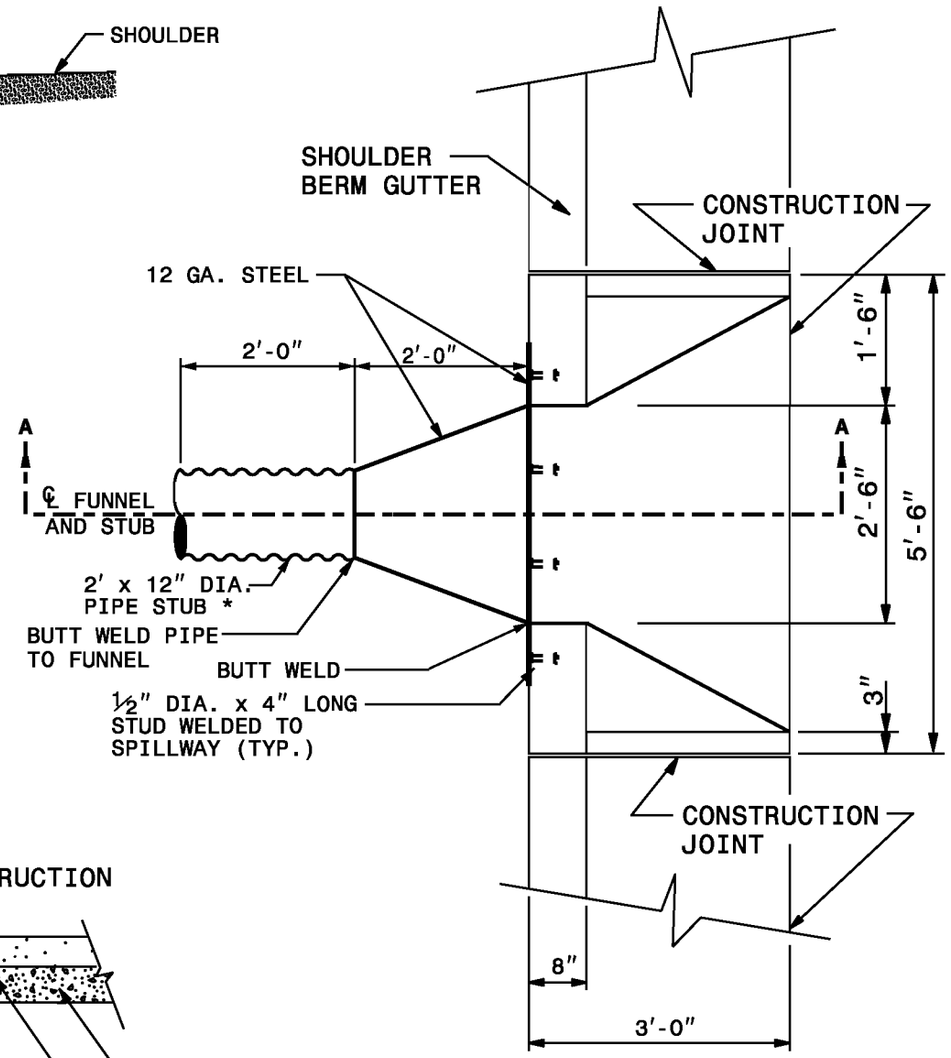

PLAN VIEW

* USE 0.109" THICK STEEL OR ALUMINUM FOR 12" DIA. STUB.

SHEET 1 OF 1

820.01

STATE OF
NORTH CAROLINA
DEPT. OF TRANSPORTATION
DIVISION OF HIGHWAYS
RALEIGH, N.C.

1-12

ENGLISH STANDARD DRAWING FOR

FUNNEL AND FUNNEL DRAIN

12" METAL FUNNEL

SHEET 1 OF 1

820.01

STATE OF
NORTH CAROLINA
DEPT. OF TRANSPORTATION
DIVISION OF HIGHWAYS
RALEIGH, N.C.

1-12

ENGLISH STANDARD DRAWING FOR

CONCRETE ENDWALL FOR SINGLE AND DOUBLE PIPE CULVERTS

15" THRU 48" PIPE - 90° SKEW

SHEET 1 OF 3

838.01

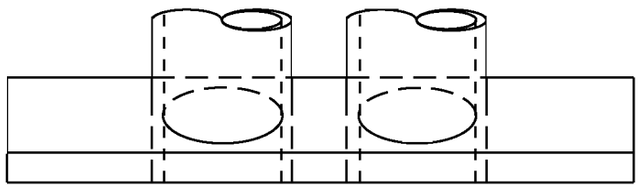

PLAN

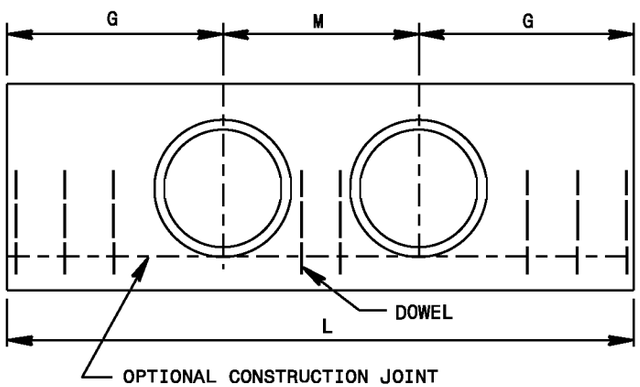

ELEVATION

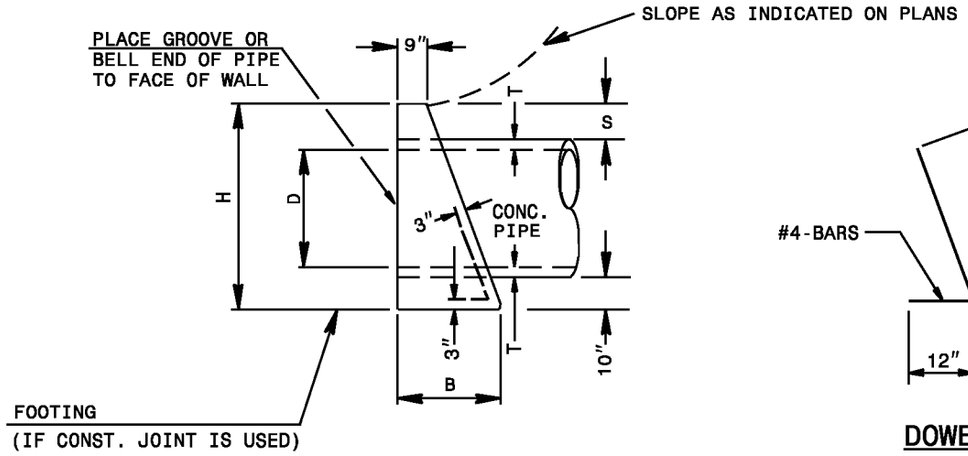

END ELEVATION

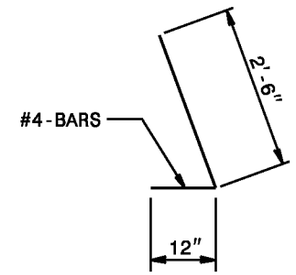

DOWEL

BAR-"X"

DOWELS IN ENDWALL WITH REINFORCED CONCRETE PIPE																				
LOC.	PIPE DIA.	SINGLE PIPE									DOUBLE PIPE									
		15"	18"	24"	30"	36"	42"		48"		15"	18"	24"	30"	36"	42"		48"		
	BARS	"X"	"X"	"X"	"X"	"X"	"X"	Y*	"X"	Y*	"X"	"X"	"X"	"X"	"X"	"X"	Y*	"X"	Y*	
G	QTY.	2	2	3	3	4	4	2	5	2	2	2	3	3	4	4	2	5	2	
M	QTY.	-	-	-	-	-	-		-		1	1	2	2	2	2		3		
G	QTY.	2	2	3	3	4	4		5		2	2	3	3	4	4		5		
TOTAL LBS.		9	9	14	14	19	55		65		12	12	19	19	23	77		92		

DIMENSIONS AND CONCRETE QUANTITIES										
USING CONCRETE PIPE										
	COMMON DIMENSIONS					SINGLE PIPE		DOUBLE PIPE		
D	H	B	G	T	S	L	YD^3	M	L	YD^3
15"	3'-3"	1'-8"	2'-9"	2¼"	9½"	5'-6"	0.7	2'-2"	7'-8"	1.0
18"	3'-7"	1'-10"	3'-2"	2½"	10"	6'-4"	1.0	2'-7"	8'-11"	1.3
24"	4'-2"	2'-1"	4'-0"	3"	10"	8'-0"	1.5	3'-5"	11'-5"	2.0
30"	5'-0"	2'-6"	4'-7"	4¼"	11½"	9'-2"	2.3	4'-3"	13'-5"	3.1
36"	5'-8"	2'-8"	5'-6"	4¾"	11½"	11'-0"	3.4	5'-0"	16'-0"	4.5
42"	6'-2"	3'-1"	6'-4"	5¼"	11½"	12'-8"	4.5	5'-10"	18'-6"	6.0
48"	6'-9"	3'-5"	7'-2"	5¾"	11½"	14'-4"	6.0	6'-8"	21'-0"	8.0

*SEE SHEET 3

STATE OF
NORTH CAROLINA
DEPT. OF TRANSPORTATION
DIVISION OF HIGHWAYS
RALEIGH, N.C.

1-12

ENGLISH STANDARD DRAWING FOR

CONCRETE ENDWALL FOR SINGLE AND DOUBLE PIPE CULVERTS

15" THRU 48" PIPE - 90° SKEW

SHEET 1 OF 3

838.01

STATE OF
NORTH CAROLINA
DEPT. OF TRANSPORTATION
DIVISION OF HIGHWAYS
RALEIGH, N.C.

1-12

ENGLISH STANDARD DRAWING FOR

CONCRETE ENDWALL FOR SINGLE AND DOUBLE PIPE CULVERTS

15" THRU 48" PIPE - 90° SKEW

SHEET 2 OF 3

838.01

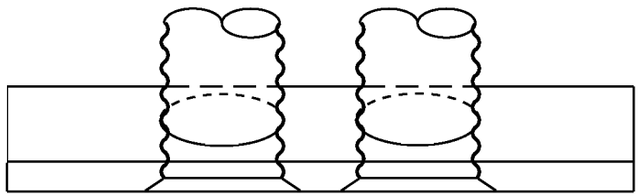

PLAN

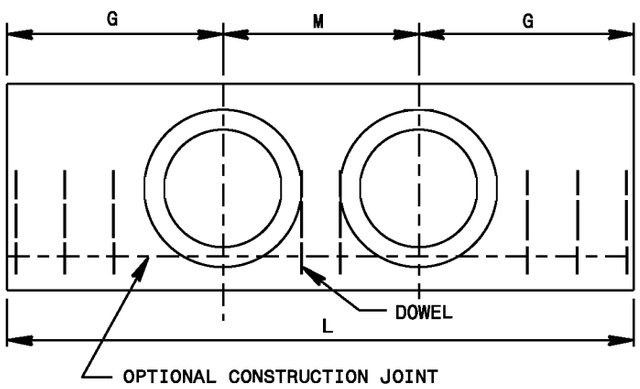

ELEVATION

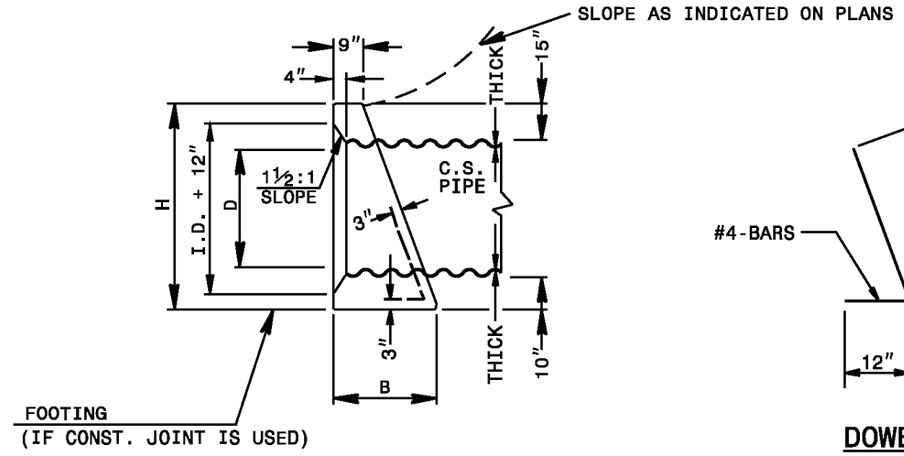

END ELEVATION

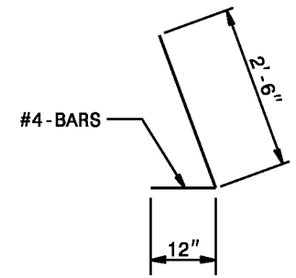

DOWEL

BAR-"X"

DOWELS IN ENDWALL WITH C. S. PIPE																				
LOC.	PIPE DIA.	SINGLE PIPE									DOUBLE PIPE									
		15"	18"	24"	30"	36"	42"		48"		15"	18"	24"	30"	36"	42"		48"		
	BARS	"X"	"X"	"X"	"X"	"X"	"X"	Y*	"X"	Y*	"X"	"X"	"X"	"X"	"X"	"X"	Y*	"X"	Y*	
G	QTY.	2	2	3	3	4	4	2	5	2	2	2	3	3	4	4	2	5	2	
M	QTY.	-	-	-	-	-	-		-		1	1	1	2	2	2		2		
G	QTY.	2	2	3	3	4	4		5		2	2	3	3	4	4		5		
TOTAL LBS.		9	9	14	14	19	53		62		12	12	16	19	23	73		85		

DIMENSIONS AND CONCRETE QUANTITIES								
USING CORRUGATED STEEL PIPE								
	COMMON			SINGLE PIPE		DOUBLE PIPE		
D	H	B	G	L	YD^3	M	L	YD^3
15"	3'-4"	1'-8"	2'-6"	5'-0"	0.7	1'-11"	6'-11"	1.0
18"	3'-7"	1'-10"	2'-11"	5'-10"	1.0	2'-3"	8'-1"	1.2
24"	4'-1"	2'-1"	3'-8"	7'-4"	1.4	3'-0"	10'-4"	1.9
30"	4'-7"	2'-4"	4'-5"	8'-10"	2.0	3'-9"	12'-7"	2.7
36"	5'-1"	2'-7"	5'-2"	10'-4"	2.8	4'-6"	14'-10"	3.8
42"	5'-7"	2'-10"	5'-11"	11'-10"	3.8	5'-3"	17'-1"	5.0
48"	6'-1"	3'-1"	6'-8"	13'-4"	4.9	6'-0"	19'-4"	7.5

*SEE SHEET 3

STATE OF
NORTH CAROLINA
DEPT. OF TRANSPORTATION
DIVISION OF HIGHWAYS
RALEIGH, N.C.

1-12

ENGLISH STANDARD DRAWING FOR

CONCRETE ENDWALL FOR SINGLE AND DOUBLE PIPE CULVERTS

15" THRU 48" PIPE - 90° SKEW

SHEET 2 OF 3

838.01

STATE OF
NORTH CAROLINA
DEPT. OF TRANSPORTATION
DIVISION OF HIGHWAYS
RALEIGH, N.C.

1-12

ENGLISH STANDARD DRAWING FOR

CONCRETE ENDWALL FOR SINGLE AND DOUBLE PIPE CULVERTS

15″ THRU 48″ PIPE - 90° SKEW

SHEET 3 OF 3

838.01

GENERAL NOTES:

CHAMFER ALL CORNERS 1″ OR HAVE A RADIUS OF 1″.

PLACE 2 #6 "Y" BARS IN THE TOP OF ALL ENDWALL FOR PIPE CULVERTS 42″ AND OVER WITH A MINIMUM OF 3″ COVER AND A LENGTH OF 6″ LESS THAN ENDWALL LENGTH.

CONSTRUCT BOTTOM SLAB WITH FORMS.

DO NOT INTERPRET WALL THICKNESS (T) SHOWN FOR THE THICKNESS ACCEPTABLE, BUT IS USED IN COMPUTING ENDWALL QUANTITIES.

WHEN THE CONTRACTOR ELECTS TO USE A CONSTRUCTION JOINT AT THE BOTTOM OF THE PIPE, PLACE BAR "X" DOWELS IN THE BASE AS SHOWN ON PLANS. SPACE BARS APPROXIMATELY ON 12″ CENTERS UNLESS OTHERWISE DIRECTED BY THE ENGINEER.

WHEN THE CONTRACTOR ELECTS TO USE A CONSTRUCTION JOINT AT THE BOTTOM OF THE PIPE AND POUR THE BASE SEPARATELY LEAVE THE POUR ROUGH.

USE CLASS "B" CONCRETE.

1-12

STATE OF
NORTH CAROLINA
DEPT. OF TRANSPORTATION
DIVISION OF HIGHWAYS
RALEIGH, N.C.

ENGLISH STANDARD DRAWING FOR

CONCRETE ENDWALL FOR SINGLE AND DOUBLE PIPE CULVERTS

15″ THRU 48″ PIPE - 90° SKEW

SHEET 3 OF 3

838.01

STATE OF
NORTH CAROLINA
DEPT. OF TRANSPORTATION
DIVISION OF HIGHWAYS
RALEIGH, N.C.

1-12

ENGLISH STANDARD DRAWING FOR

CONCRETE ENDWALL AND SLUICE GATE

15″ THRU 36″ PIPE - 90° SKEW

SHEET 1 OF 1

838.02

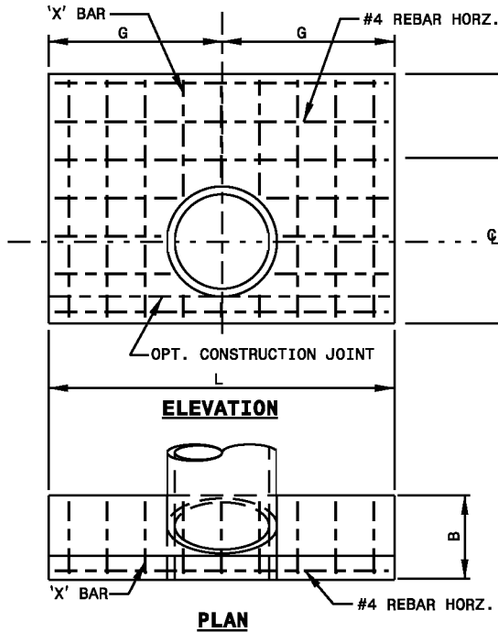

ELEVATION

PLAN

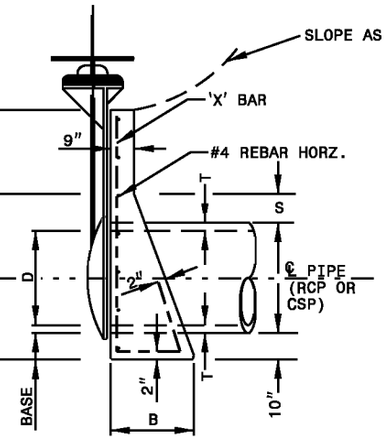

END ELEVATION

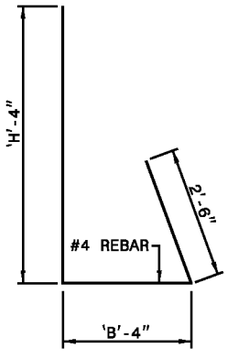

DOWEL 'X' BAR

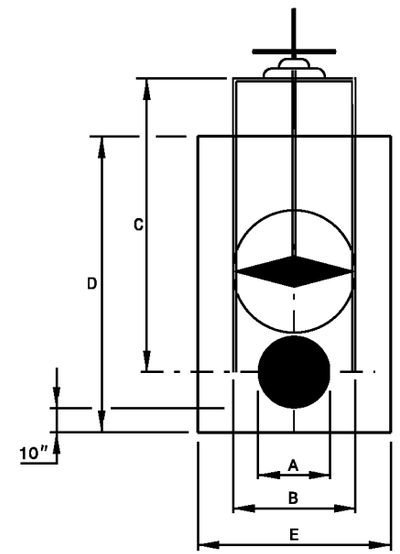

NOTE:
- THIS STANDARD FOR THE SLUICE GATE PROVIDES ONLY BASIC INFORMATION FOR PLACEMENT.
- INSTALL THE SLUICE GATE IN ACCORDANCE WITH THE MANUFACTURER'S DIMENSIONS AND SPECIFICATIONS.
- SEE PLANS FOR LOCATIONS AND PIPE SIZES

SLUICE GATE DIMENSIONS

PIPE DIAMETER	A	15″	18″	24″	30″	36″
GATE DIAMETER	B	22″	25″	32″	38¾″	46″
FRAME HEIGHT, MIN.	C	36″	36″	48″	60″	72″
H. W. HEIGHT, MIN.	D	4'-5½″	4'-7″	5'-10″	7'-1″	8'-4″
H. W. WIDTH	E	5'-6″	6'-4″	8'-0″	9'-2″	11'-0″

DIMENSIONS AND QUANTITIES FOR RCP OR CSP

CALCULATIONS BASED ON CONCRETE PIPE

PIPE DIA.	H^1 MINIMUM DIMENSIONS						
D	H^1	B	G	T	S	L	CONC YD^3
15″	3'-3″	1'-8″	2'-9″	2¼″	9½″	5'-6″	0.7
18″	3'-7″	1'-10″	3'-2″	2½″	10″	6'-4″	1.0
24″	4'-2″	2'-1″	4'-0″	3″	10″	8'-0″	1.5
30″	5'-0″	2'-6″	4'-7″	4¼″	11½″	9'-2″	2.3
36″	5'-8″	2'-8″	5'-6″	4¾″	12½″	11'-0″	3.4

H^2 QUANTITES

PIPE DIA.	PER 1' ADDTIONAL HEIGHT	
D	STEEL LBS.	CONC YD^3
15″	7.5	0.2
18″	8.7	0.2
24″	11.1	0.2
30″	12.6	0.3
36″	15.1	0.3

REBAR IN ENDWALL (H^1 MIN.)

USE WITH RC OR CS PIPE	PIPE DIA.						
	15″	18″	24″	30″	36″	42″	48″
	QTY	QTY	QTY	QTY	QTY	QTY	QTY
'X' BARS	6	7	9	10	12	14	15
HORZ BARS	4	4	5	6	7	7	8
TOTAL LBS.	41	50	74	112	131	161	195

GENERAL NOTES:
1. LIMIT VARIABLE HEIGHT DIMENSION (H) TO FRAME HEIGHT OF SLUICE GATE, 3' ABOVE THE H^1 DIMENSION OR 10' WHICHEVER IS LESS.
2. ATTACHMENT OF GATE MAY REQUIRE SPECIFIC POSTIONING OF PIPE AND/OR MODIFICATION OF ENDWALL. CONFIRMATION OF GATE DIMENSIONS AND ATTACHMENT METHOD IS RECOMMENDED PRIOR TO CONSTRUCTION OF ENDWALL.
3. PLACE NO. 4 REBAR ON 12″ HORIZONTAL AND VERTICAL CENTERS WITH 2″ MINIMUM CONCRETE COVERAGE.
4. CONSTRUCT 1″ CHAMFER OR RADIUS ON ALL EXTERIOR CORNERS.
5. USE FORMS TO CONSTRUCT THE BOTTOM SLAB.
6. WALL THICKNESS (T) IS USED TO COMPUTE QUANTITIES, NOT TO INFER SIZE.
7. WHEN THE BASE IS POURED SEPARATELY, LEAVE THE POUR ROUGH.
8. USE CLASS 'B' CONCRETE.
9. CUT OR BEND REBARS AS NEEDED TO ACCOMMODATE PIPE.

STATE OF
NORTH CAROLINA
DEPT. OF TRANSPORTATION
DIVISION OF HIGHWAYS
RALEIGH, N.C.

1-12

ENGLISH STANDARD DRAWING FOR

CONCRETE ENDWALL AND SLUICE GATE

15″ THRU 36″ PIPE - 90° SKEW

SHEET 1 OF 1

838.02

STATE OF
NORTH CAROLINA
DEPT. OF TRANSPORTATION
DIVISION OF HIGHWAYS
RALEIGH, N.C.

1-12

ENGLISH STANDARD DRAWING FOR

CONCRETE ENDWALL FOR SINGLE AND DOUBLE PIPE CULVERTS

17" X 13" THRU 71" X 47" PIPE ARCH 2 2/3" X ½" CORRUGATIONS - 90° SKEW

SHEET 1 OF 1

838.04

GENERAL NOTES:
- CHAMFER ALL CORNERS 1". USE CLASS "B" CONCRETE.
- PLACE 2 #6 "Y" BARS IN THE TOP OF ALL ENDWALL FOR PIPE CULVERTS 42" AND OVER WITH A MINIMUM OF 3" COVER AND A LENGTH OF 6" LESS THAN ENDWALL LENGTH.
- CONSTRUCT BOTTOM SLAB WITH FORMS.
- WHEN THE CONTRACTOR ELECTS TO USE A CONSTRUCTION JOINT AT THE BOTTOM OF THE PIPE, PLACE BAR "X" DOWELS IN THE BASE AS SHOWN ON PLANS. SPACE BARS APPROXIMATELY ON 12" CENTERS UNLESS OTHERWISE DIRECTED BY THE ENGINEER.
- WHEN THE CONTRACTOR ELECTS TO USE A CONSTRUCTION JOINT AT THE BOTTOM OF THE PIPE AND POUR THE BASE SEPARATELY LEAVE THE POUR ROUGH.
- DO NOT INTERPRET WALL THICKNESS (T) SHOWN FOR THE THICKNESS ACCEPTABLE, BUT IS USED IN COMPUTING ENDWALL QUANTITIES.

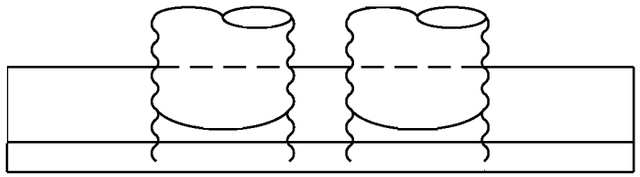

PLAN

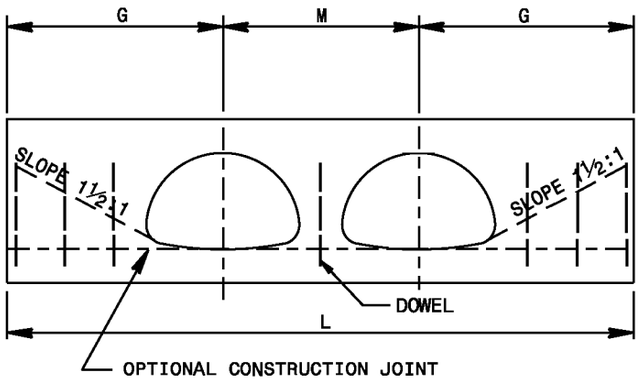

ELEVATION

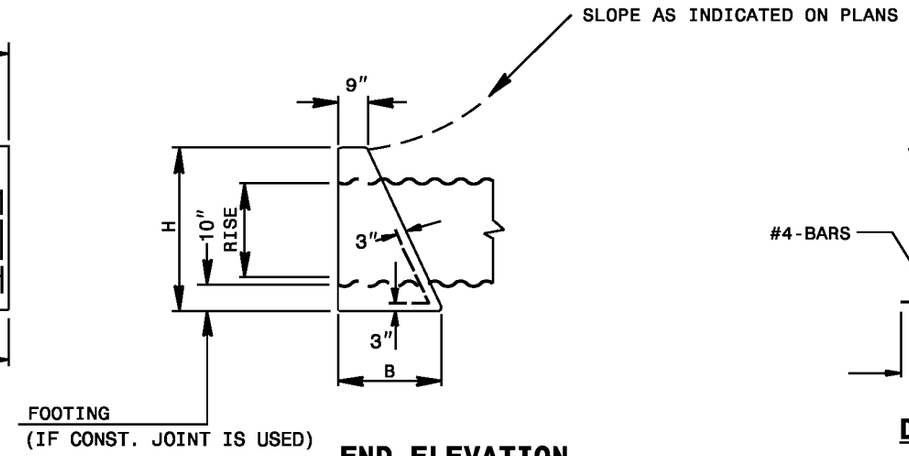

END ELEVATION

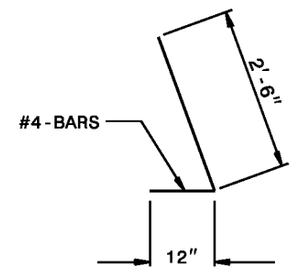

DOWEL

BAR-"X"

		DOWELS IN ENDWALL																			
	PIPE	SINGLE PIPE										DOUBLE PIPE									
LOC.	DIA.	18"	22"	25"	29"	36"	43"	50"	58"	65"	72"	18"	22"	25"	29"	36"	43"	50"	58"	65"	72"
	BARS	"X"	"X"	"X"	"X"	"X"	"X"	"X"	"X"	"X"	"X"	"X"	"X"	"X"	"X"	"X"	"X"	"X"	"X"	"X"	"X"
G	QTY.	2	2	2	3	3	4	4	4	5	5	2	2	2	3	3	4	4	4	5	5
M	QTY.	-	-	-	-	-	-	-	-	-	-	1	1	1	1	1	1	2	2	2	2
G	QTY.	2	2	2	3	3	4	4	4	5	5	2	2	2	3	3	4	4	4	5	5
TOTAL LBS.		9	9	9	14	14	19	19	19	23	23	12	12	12	16	16	21	23	23	28	28

DIMENSIONS AND CONCRETE QUANTITIES										
COMMON DIMENSIONS USING C.S. PIPE ARCH							SINGLE PIPE		DOUBLE PIPE	
SPAN	RISE	THICK.	H	B	G	M	L	YD^3	L	YD^3
17"	13"	0.064	2'-9"	1'-5"	2'-7"	1'-11"	5'-2"	0.526	7'-0"	0.684
21"	15"	0.064	2'-11"	1'-6"	3'-0"	2'-4"	6'-0"	0.663	8'-4"	0.880
24"	18"	0.064	3'-2"	1'-7"	3'-5"	2'-8"	6'-10"	0.840	9'-6"	1.110
28"	20"	0.079	3'-4"	1'-8"	3'-9"	3'-1"	7'-5"	0.994	10'-6"	1.316
35"	24"	0.079	3'-8"	1'-10"	4'-6"	3'-11"	9'-0"	1.368	12'-11"	1.844
42"	29"	0.079	4'-1"	2'-1"	5'-4"	4'-8"	10'-8"	1.950	15'-4"	2.614
49"	33"	0.109	4'-5"	2'-3"	6'-0"	5'-5"	12'-0"	2.461	17'-5"	3.307
57"	38"	0.109	4'-10"	2'-6"	6'-10"	6'-4"	13'-8"	3.290	20'-0"	4.446
64"	43"	0.138	5'-3"	2'-8"	7'-8"	7'-1"	15'-4"	4.189	22'-5"	5.637
71"	47"	0.138	5'-7"	2'-10"	8'-4"	7'-11"	16'-8"	5.007	24'-7"	6.772

STATE OF
NORTH CAROLINA
DEPT. OF TRANSPORTATION
DIVISION OF HIGHWAYS
RALEIGH, N.C.

1-12

ENGLISH STANDARD DRAWING FOR

CONCRETE ENDWALL FOR SINGLE AND DOUBLE PIPE CULVERTS

17" X 13" THRU 71" X 47" PIPE ARCH 2 2/3" X ½" CORRUGATIONS - 90° SKEW

SHEET 1 OF 1

838.04

STATE OF
NORTH CAROLINA
DEPT. OF TRANSPORTATION
DIVISION OF HIGHWAYS
RALEIGH, N.C.

1-12

ENGLISH STANDARD DRAWING FOR

CONCRETE "L" ENDWALL FOR SINGLE PIPE CULVERTS

15" THRU 48" PIPE

SHEET 1 OF 1

838.05

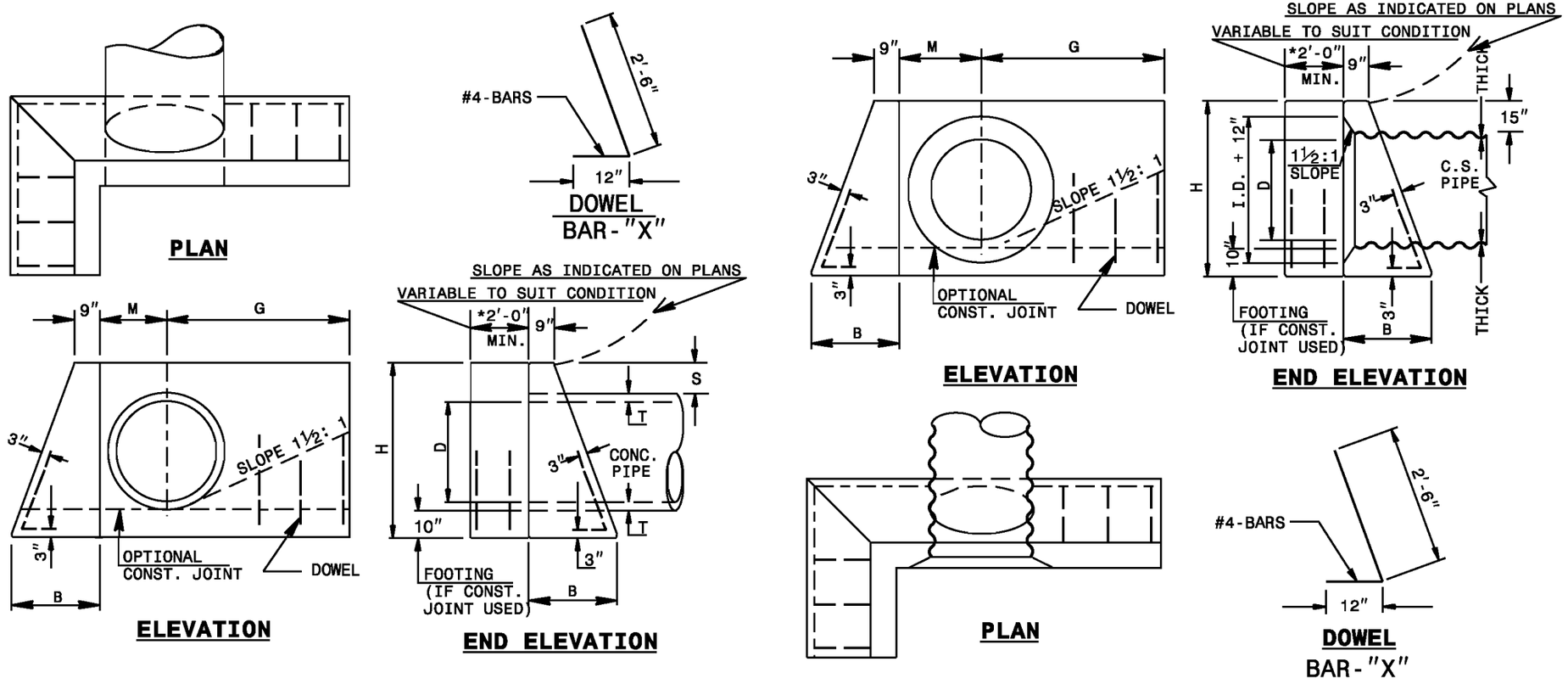

GENERAL NOTES:
- CHAMFER ALL CORNERS 1". USE CLASS "B" CONCRETE.
- PLACE 2 #6 "Y" BARS IN THE TOP OF ALL ENDWALL FOR PIPE CULVERTS 42" AND OVER WITH A MINIMUM OF 3" COVER AND A LENGTH OF 6" LESS THAN ENDWALL LENGTH.
- CONSTRUCT BOTTOM SLAB WITH FORMS.
- WHEN THE CONTRACTOR ELECTS TO USE A CONSTRUCTION JOINT AT THE BOTTOM OF THE PIPE, PLACE BAR "X" DOWELS IN THE BASE AS SHOWN ON PLANS. SPACE BARS APPROXIMATELY ON 12" CENTERS UNLESS OTHERWISE DIRECTED BY THE ENGINEER.
- WHEN THE CONTRACTOR ELECTS TO USE A CONSTRUCTION JOINT AT THE BOTTOM OF THE PIPE AND POUR THE BASE SEPARATELY LEAVE THE POUR ROUGH.
- DO NOT INTERPRET WALL THICKNESS (T) SHOWN FOR THE THICKNESS ACCEPTABLE, BUT IS USED IN COMPUTING ENDWALL QUANTITIES.

REINFORCING QUANTITIES

DIA.	15"	18"	24"	30"	36"	42" C.S.		42" R.C.		48" C.S.		48" R.C.	
BARS	"X"	"X"	"X"	"X"	"X"	"X"	"Y"	"X"	"Y"	"X"	"Y"	"X"	"Y"
QTY.	5	5	6	6	7	7	2	7	2	8	2	8	2
LBS.	12	12	14	14	16	47		49		52		55	

*QUANTITIES BASED ON 2'-0"

DIMENSIONS AND CONCRETE QUANTITIES

	R.C.P. DIMENSIONS AND VOLUMES							C.S.P. DIMENSIONS AND VOLUMES				
D	H	B	G	M	S	T	YD^3	H	B	G	M	YD^3
15"	3'-4"	1'-8"	2'-6"	1'-1"	10½"	2¼"	1.0	3'-4"	1'-8"	2'-5"	1'-5"	1.0
18"	3'-7"	1'-10"	2'-11"	1'-3"	10"	2½"	1.2	3'-7"	1'-10"	2'-9"	1'-6"	1.3
24"	4'-2"	2'-1"	3'-9"	1'-6"	10"	3"	1.7	4'-1"	2'-1"	3'-6"	1'-9"	1.8
30"	4'-9"	2'-5"	4'-8"	1'-10"	10"	3½"	2.5	4'-7"	2'-4"	4'-3"	2'-0"	2.4
36"	5'-5"	2'-9"	5'-8"	2'-2"	9½"	4¾"	3.6	5'-1"	2'-7"	5'-0"	2'-3"	3.1
42"	6'-0"	3'-0"	6'-7"	2'-5"	9½"	5¼"	4.6	5'-7"	2'-10"	5'-9"	2'-6"	4.0
48"	6'-7"	3'-4"	7'-5"	2'-9"	9½"	5¾"	6.0	6'-1"	3'-1"	6'-6"	2'-9"	5.1

STATE OF
NORTH CAROLINA
DEPT. OF TRANSPORTATION
DIVISION OF HIGHWAYS
RALEIGH, N.C.

1-12

ENGLISH STANDARD DRAWING FOR

CONCRETE "L" ENDWALL FOR SINGLE PIPE CULVERTS

15" THRU 48" PIPE

SHEET 1 OF 1

838.05

STATE OF
NORTH CAROLINA
DEPT. OF TRANSPORTATION
DIVISION OF HIGHWAYS
RALEIGH, N.C.

1-12

ENGLISH STANDARD DRAWING FOR

CONCRETE "L" ENDWALL FOR SINGLE PIPE CULVERTS

17" X 13" THRU 71" X 47" PIPE ARCH 2 2/3" X 1/2" CORRUGATIONS

SHEET 1 OF 1

838.06

GENERAL NOTES:
- CHAMFER ALL CORNERS 1". USE CLASS "B" CONCRETE.
- PLACE 2 #6 "Y" BARS IN THE TOP OF ALL ENDWALLS FOR PIPE CULVERTS 42" AND OVER WITH A MINIMUM OF 3" COVER AND A LENGTH OF 6" LESS THAN ENDWALL LENGTH.
- CONSTRUCT BOTTOM SLAB WITH FORMS.
- WHEN THE CONTRACTOR ELECTS TO USE A CONSTRUCTION JOINT AT THE BOTTOM OF THE PIPE, PLACE BAR "X" DOWELS IN THE BASE AS SHOWN ON PLANS. SPACE BARS APPROXIMATELY ON 12" CENTERS UNLESS OTHERWISE DIRECTED BY THE ENGINEER.
- WHEN THE CONTRACTOR ELECTS TO USE A CONSTRUCTION JOINT AT THE BOTTOM OF THE PIPE AND POUR THE BASE SEPARATELY LEAVE THE POUR ROUGH.
- DO NOT INTERPRET WALL THICKNESS (T) SHOWN FOR THE THICKNESS ACCEPTABLE, BUT IS USED IN COMPUTING ENDWALL QUANTITIES.

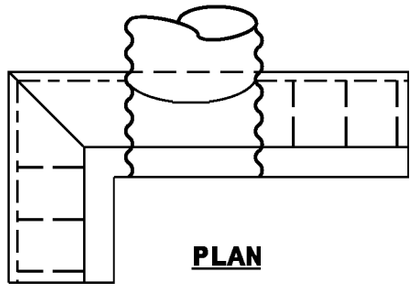

PLAN

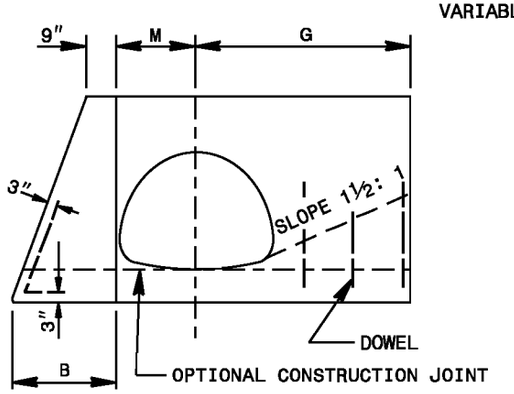

ELEVATION

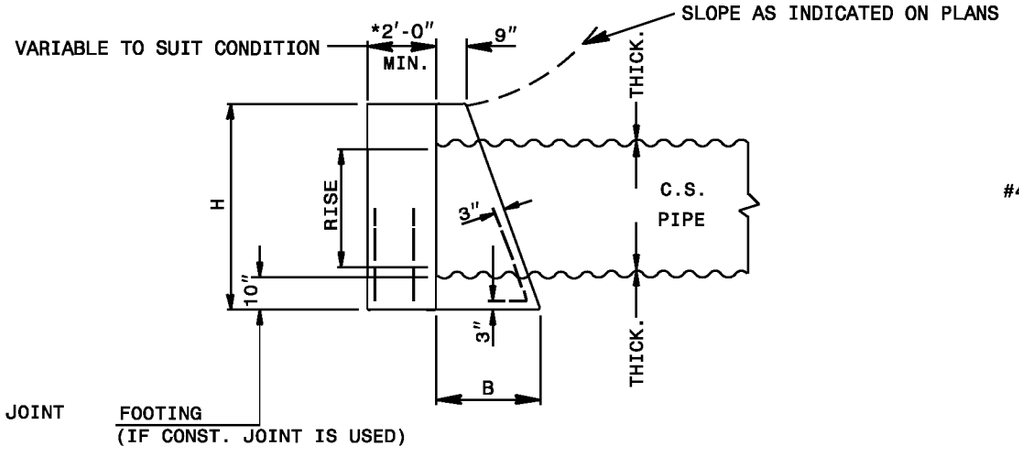

END ELEVATION

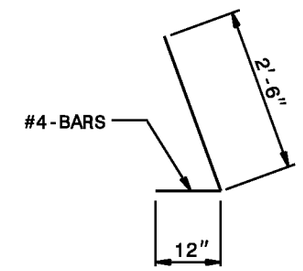

DOWEL
BAR-"X"

REINFORCING QUANTITIES										
DIA.	18"	22"	25"	29"	36"	43"	50"	58"	65"	72"
BARS	"X"	"X"	"X"	"X"	"X"	"X"	"Y"	"X"	"Y"	"X"
QTY.	5	5	5	6	6	7	7	7	8	8
LBS.	12	12	12	14	14	16	16	16	19	19

*QUANTITIES BASED ON 2'-0"

DIMENSIONS AND CONCRETE QUANTITIES							
COMMON DIMENSIONS							TOTAL CONC.
SPAN	RISE	THICK	H	B	G	M	YD^3
17"	13"	0.064	2'-9"	1'-5"	2'-7"	1'-0"	0.695
21"	15"	0.064	2'-11"	1'-6"	3'-0"	1'-2"	0.825
24"	18"	0.064	3'-2"	1'-7"	3'-5"	1'-3"	0.984
28"	20"	0.079	3'-4"	1'-8"	3'-9"	1'-5"	1.133
35"	24"	0.079	3'-8"	1'-10"	4'-6"	1'-9"	1.476
42"	29"	0.079	4'-1"	2'-1"	5'-4"	2'-0"	1.990
49"	33"	0.109	4'-5"	2'-3"	6'-0"	2'-4"	2.450
57"	38"	0.109	4'-10"	2'-6"	6'-10"	2'-8"	3.178
64"	43"	0.138	5'-3"	2'-8"	7'-8"	2'-11"	3.902
71"	47"	0.138	5'-7"	2'-10"	8'-4"	3'-3"	4.603

1-12
STATE OF
NORTH CAROLINA
DEPT. OF TRANSPORTATION
DIVISION OF HIGHWAYS
RALEIGH, N.C.

ENGLISH STANDARD DRAWING FOR
CONCRETE "L" ENDWALL FOR SINGLE PIPE CULVERTS
17" X 13" THRU 71" X 47" PIPE ARCH 2 2/3" X 1/2" CORRUGATIONS

SHEET 1 OF 1
838.06

STATE OF
NORTH CAROLINA
DEPT. OF TRANSPORTATION
DIVISION OF HIGHWAYS
RALEIGH, N.C.

1-12

ENGLISH STANDARD DRAWING FOR

CONCRETE ENDWALL FOR SINGLE AND DOUBLE PIPE CULVERTS

40" X 31" THRU 66" X 51" PIPE ARCH 3" X 1" CORRUGATIONS - 90° SKEW

SHEET 1 OF 1

838.07

GENERAL NOTES:
- CHAMFER ALL CORNERS 1". USE CLASS "B" CONCRETE.
- PLACE 2 #6 "Y" BARS IN THE TOP OF ALL ENDWALL FOR PIPE CULVERTS 42" AND OVER WITH A MINIMUM OF 3" COVER AND A LENGTH OF 6" LESS THAN ENDWALL LENGTH.
- CONSTRUCT BOTTOM SLAB WITH FORMS.
- WHEN THE CONTRACTOR ELECTS TO USE A CONSTRUCTION JOINT AT THE BOTTOM OF THE PIPE, PLACE BAR "X" DOWELS IN THE BASE AS SHOWN ON PLANS. SPACE BARS APPROXIMATELY ON 12" CENTERS UNLESS OTHERWISE DIRECTED BY THE ENGINEER.
- WHEN THE CONTRACTOR ELECTS TO USE A CONSTRUCTION JOINT AT THE BOTTOM OF THE PIPE AND POUR THE BASE SEPARATELY LEAVE THE POUR ROUGH.
- DO NOT INTERPRET WALL THICKNESS (T) SHOWN FOR THE THICKNESS ACCEPTABLE, BUT IS USED IN COMPUTING ENDWALL QUANTITIES.

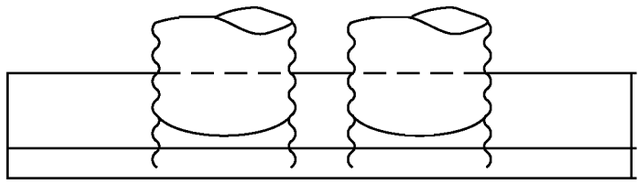

PLAN

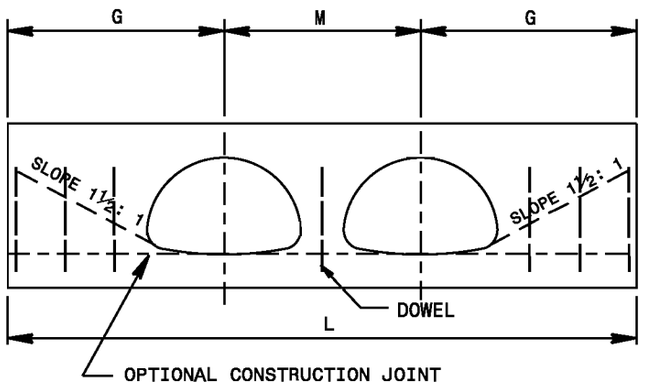

ELEVATION

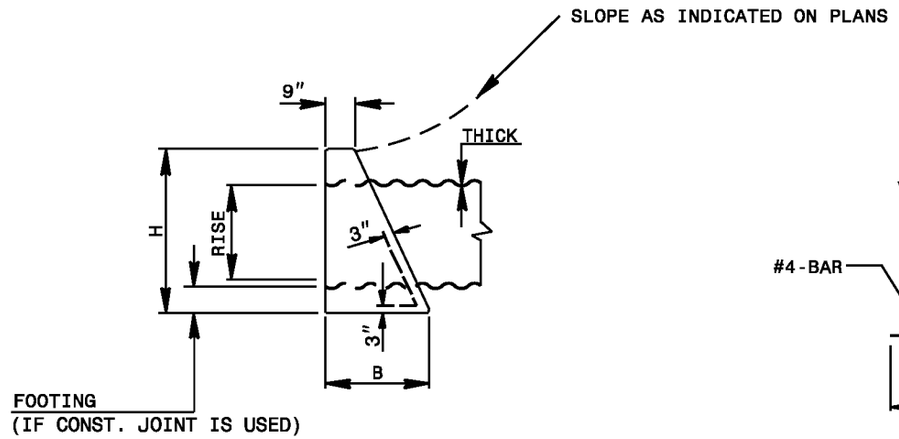

END ELEVATION

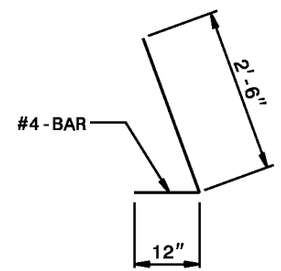

DOWEL

BAR-"X"

DOWELS IN ENDWALL											
LOC.	PIPE	SINGLE PIPE					DOUBLE PIPE				
	SPAN	40"	46"	53"	60"	66"	40"	46"	53"	60"	66"
	BARS	"X"	"X"	"X"	"X"	"X"	"X"	"X"	"X"	"X"	"X"
G	QTY.	4	4	4	5	5	4	4	4	5	5
M	QTY.	-	-	-	-	-	1	2	2	2	2
G	QTY.	4	4	4	5	5	4	5	5	5	5
TOT. LBS.		19	19	19	23	23	21	23	23	28	28

DIMENSIONS AND CONCRETE QUANTITIES										
COMMON DIMENSIONS USING C.S. PIPE ARCH							SINGLE PIPE		DOUBLE PIPE	
SPAN	RISE	THICK.	H	B	G	M	L	YD^3	L	YD^3
40"	31"	0.079	4'-3"	2'-2"	5'-6"	4'-5"	11'-0"	2.179	15'-5"	2.848
46"	36"	0.109	4'-8"	2'-4"	6'-3"	5'-1"	12'-6"	2.834	17'-7"	3.692
53"	41"	0.109	5'-1"	2'-7"	7'-1"	5'-10"	14'-2"	3.742	20'-0"	4.868
60"	46"	0.109	5'-6"	2'-9"	7'-11"	6'-10"	15'-10"	4.717	22'-8"	6.234
66"	51"	0.109	5'-11"	3'-0"	8'-9"	7'-4"	17'-6"	5.968	24'-10"	7.759

STATE OF
NORTH CAROLINA
DEPT. OF TRANSPORTATION
DIVISION OF HIGHWAYS
RALEIGH, N.C.

1-12

ENGLISH STANDARD DRAWING FOR

CONCRETE ENDWALL FOR SINGLE AND DOUBLE PIPE CULVERTS

40" X 31" THRU 66" X 51" PIPE ARCH 3" X 1" CORRUGATIONS - 90° SKEW

SHEET 1 OF 1

838.07

STATE OF
NORTH CAROLINA
DEPT. OF TRANSPORTATION
DIVISION OF HIGHWAYS
RALEIGH, N.C.

1-12

ENGLISH STANDARD DRAWING FOR

CONCRETE "L" ENDWALL FOR SINGLE PIPE CULVERTS

40" X 31" THRU 66" X 51" PIPE ARCH 3" X 1" CORRUGATIONS

SHEET 1 OF 1

838.08

GENERAL NOTES:
- CHAMFER ALL CORNERS 1". USE CLASS "B" CONCRETE.
- PLACE 2 #6 "Y" BARS IN THE TOP OF ALL ENDWALL FOR PIPE CULVERTS 42" AND OVER WITH A MINIMUM OF 3" COVER AND A LENGTH OF 6" LESS THAN ENDWALL LENGTH.
- CONSTRUCT BOTTOM SLAB WITH FORMS.
- WHEN THE CONTRACTOR ELECTS TO USE A CONSTRUCTION JOINT AT THE BOTTOM OF THE PIPE, PLACE BAR "X" DOWELS IN THE BASE AS SHOWN ON PLANS. SPACE BARS APPROXIMATELY ON 12" CENTERS UNLESS OTHERWISE DIRECTED BY THE ENGINEER.
- WHEN THE CONTRACTOR ELECTS TO USE A CONSTRUCTION JOINT AT THE BOTTOM OF THE PIPE AND POUR THE BASE SEPARATELY LEAVE THE POUR ROUGH.
- DO NOT INTERPRET WALL THICKNESS (T) SHOWN FOR THE THICKNESS ACCEPTABLE, BUT IS USED IN COMPUTING ENDWALL QUANTITIES.

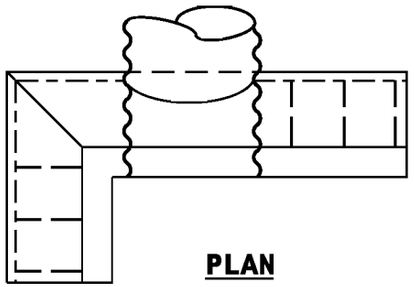

PLAN

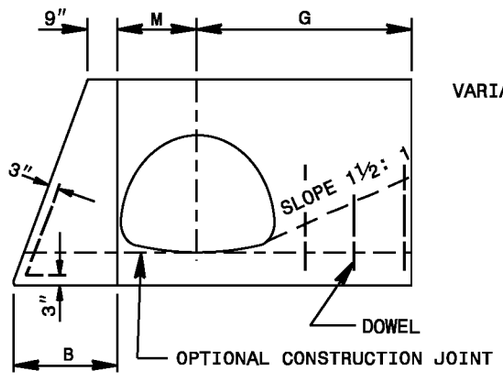

ELEVATION

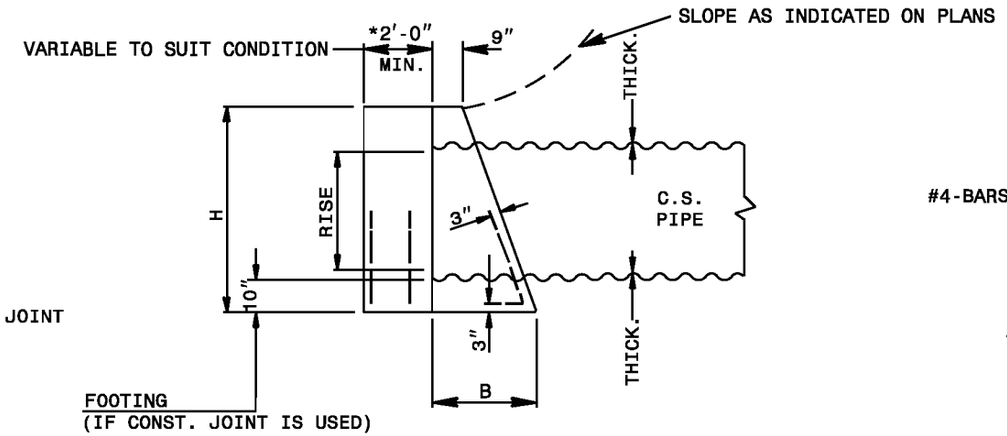

END ELEVATION

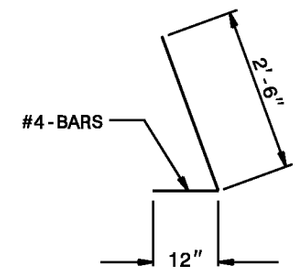

DOWEL

BAR-"X"

DOWELS IN ENDWALL					
DIA.	40"	46"	53"	60"	66"
BARS	"X"	"X"	"X"	"X"	"X"
QTY.	7	7	7	8	8
LBS.	16	16	16	19	19

DIMENSIONS AND CONCRETE QUANTITIES							
COMMON DIMENSIONS							TOTAL CONC.
SPAN	RISE	THICK	H	B	G	M	YD^3
40"	31"	0.079	4'-3"	2'-2"	5'-6"	1'-11"	2.187
46"	36"	0.109	4'-8"	2'-4"	6'-3"	2'-2"	2.739
53"	41"	0.109	5'-1"	2'-7"	7'-1"	2'-6"	3.524
60"	46"	0.109	5'-6"	2'-9"	7'-11"	2'-9"	4.302
66"	51"	0.109	5'-11"	3'-0"	8'-9"	3'-0"	5.345

STATE OF
NORTH CAROLINA
DEPT. OF TRANSPORTATION
DIVISION OF HIGHWAYS
RALEIGH, N.C.

1-12

ENGLISH STANDARD DRAWING FOR

CONCRETE "L" ENDWALL FOR SINGLE PIPE CULVERTS

40" X 31" THRU 66" X 51" PIPE ARCH 3" X 1" CORRUGATIONS

SHEET 1 OF 1

838.08

STATE OF
NORTH CAROLINA
DEPT. OF TRANSPORTATION
DIVISION OF HIGHWAYS
RALEIGH, N.C.

1-12

ENGLISH STANDARD DRAWING FOR

CONCRETE ENDWALL FOR OUTFALL

4", 6" OR 8" PIPE

SHEET 1 OF 1

838.10

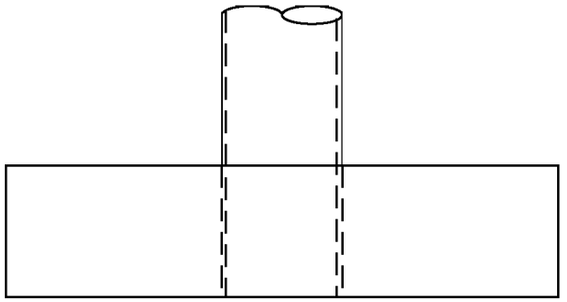

PLAN

GENERAL NOTES:
CHAMFER ALL CORNERS 1".
USE CLASS "B" CONCRETE.

CONCRETE QUANTITIES			
D	REINF. CONC.	BIT. FIBER	CORR. PLASTIC OR METAL
	YD^3	YD^3	YD^3
4"	0.082	0.083	0.083
6"	0.087	0.088	0.089
8"	0.091	0.092	0.094

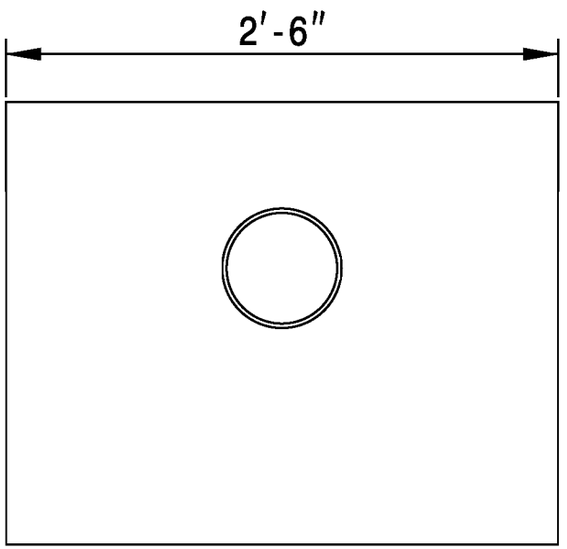

ELEVATION

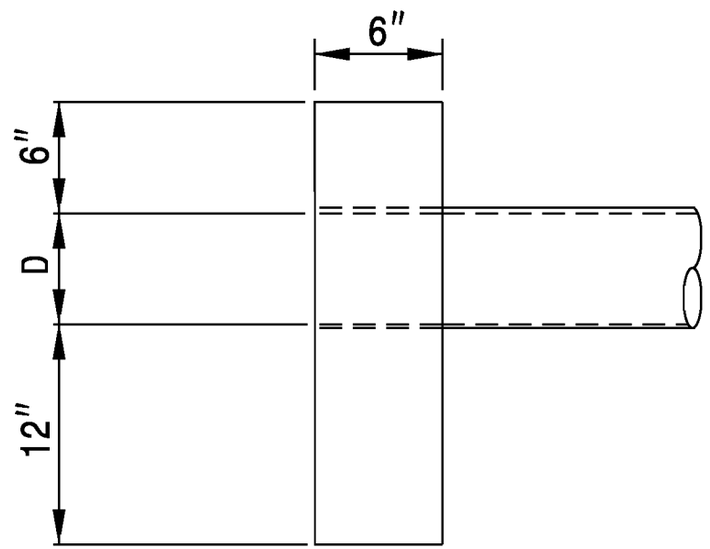

END ELEVATION

STATE OF
NORTH CAROLINA
DEPT. OF TRANSPORTATION
DIVISION OF HIGHWAYS
RALEIGH, N.C.

1-12

ENGLISH STANDARD DRAWING FOR

CONCRETE ENDWALL FOR OUTFALL

4", 6" OR 8" PIPE

SHEET 1 OF 1

838.10

STATE OF
NORTH CAROLINA
DEPT. OF TRANSPORTATION
DIVISION OF HIGHWAYS
RALEIGH, N.C.

1-12

ENGLISH STANDARD DRAWING FOR

BRICK ENDWALL FOR SINGLE AND DOUBLE PIPE CULVERTS

15″ THRU 48″ PIPE - 90° SKEW

SHEET 1 OF 1

838.11

GENERAL NOTES:

-ALL MORTAR JOINTS ARE ½″ ± ⅛″.

-BOND BRICKWORK WITH FULL HEADERS EVERY THREE COURSES.

-CONCAVE TOOL ALL EXPOSED JOINTS.

-DO NOT INTERPRET WALL THICKNESS (T) SHOWN AS THE THICKNESS ACCEPTABLE, BUT IS USED ONLY IN COMPUTING ENDWALL DIMENSIONS AND QUANTITIES.

-CONSTRUCT THE BASE WITH FORMS.

-USE CLASS 'B' CONCRETE.

-PAY FOR CONCRETE AS BRICK MASONRY.

-CONCRETE BRICK MAY BE USED IN LIEU OF CLAY BRICK.

-JUMBO BRICK WILL BE PERMITTED.

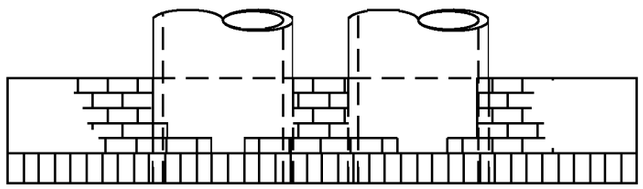

PLAN

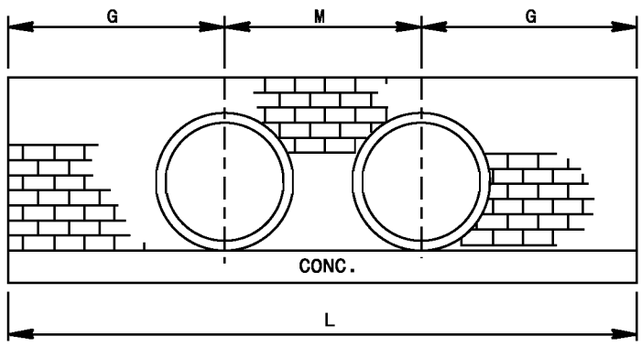

ELEVATION

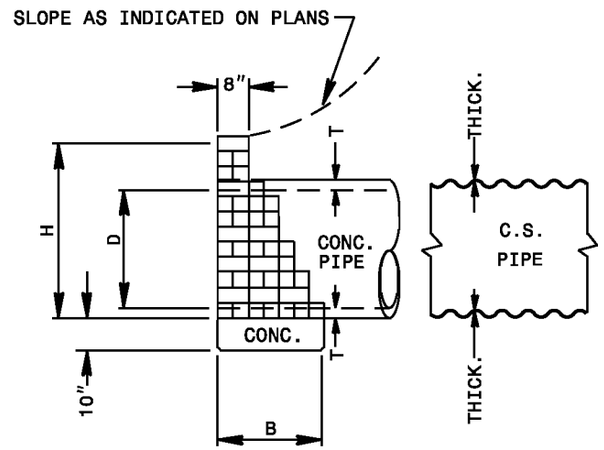

END ELEVATION

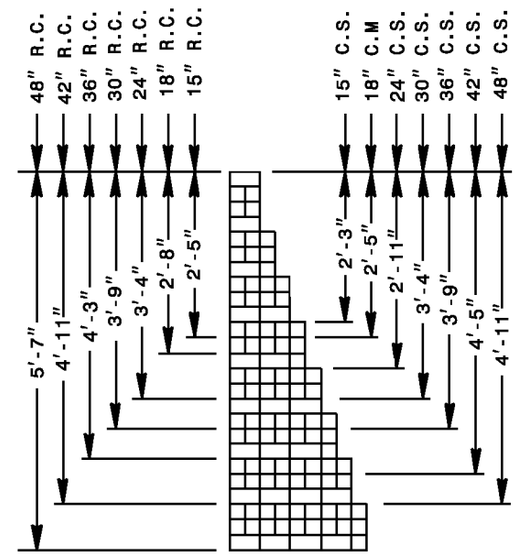

TYPICAL SECTION THRU WALL

DIMENSIONS AND QUANTITIES

USING CONCRETE PIPE

	COMMON DIMS.				SINGLE PIPE			DOUBLE PIPE			
D	H	B	G	T	L	BRICK YD³	CONC. YD³	M	L	BRICK YD³	CONC. YD³
15″	2′-5″	1′-8″	2′-10″	1⅞″	5′-8″	0.441	0.291	2′-2″	7′-10″	0.555	0.403
18″	2′-8″	1′-8″	3′-2″	2″	6′-4″	0.562	0.326	2′-7″	8′-11″	0.722	0.459
24″	3′-4″	2′-0″	4′-1″	3″	8′-2″	1.008	0.504	3′-5″	11′-7″	1.285	0.715
30″	3′-9″	2′-4″	4′-8″	3½″	9′-4″	1.391	0.672	4′-3″	13′-7″	1.820	0.976
36″	4′-3″	2′-4″	5′-5″	4″	10′-10″	1.895	0.780	5′-0″	15′-10″	2.462	1.140
42″	4′-11″	2′-8″	6′-4″	5¼″	12′-8″	2.867	1.043	5′-10″	18′-6″	3.729	1.523
48″	5′-7″	3′-0″	7′-3″	5¾″	14′-6″	4.032	1.343	6′-8″	21′-2″	5.184	1.960

USING CORRUGATED METAL PIPE

	COMMON DIMS.				SINGLE PIPE			DOUBLE PIPE			
D	H	B	G	L	L	BRICK YD³	CONC. YD³	M	L	BRICK YD³	CONC. YD³
15″	2′-3″	1′-4″	2′-9″	5′-6″	5′-6″	0.384	0.226	1′-11″	7′-5″	0.482	0.305
18″	2′-5″	1′-8″	3′-0″	6′-0″	6′-0″	0.478	0.309	2′-3″	8′-3″	0.605	0.424
24″	2′-11″	1′-8″	3′-9″	7′-6″	7′-6″	0.749	0.386	3′-0″	10′-6″	0.954	0.540
30″	3′-4″	2′-0″	4′-5″	8′-10″	8′-10″	1.090	0.545	3′-9″	12′-7″	1.399	0.777
36″	3′-9″	2′-4″	5′-0″	10′-0″	10′-0″	1.503	0.720	4′-6″	14′-6″	1.965	1.044
42″	4′-5″	2′-8″	6′-0″	12′-0″	12′-0″	2.373	0.988	5′-3″	17′-3″	3.062	1.420
48″	4′-11″	2′-8″	6′-9″	13′-6″	13′-6″	3.102	1.111	6′-0″	19′-6″	4.002	1.606

STATE OF
NORTH CAROLINA
DEPT. OF TRANSPORTATION
DIVISION OF HIGHWAYS
RALEIGH, N.C.

1-12

ENGLISH STANDARD DRAWING FOR

BRICK ENDWALL FOR SINGLE AND DOUBLE PIPE CULVERTS

15″ THRU 48″ PIPE - 90° SKEW

SHEET 1 OF 1

838.11

STATE OF
NORTH CAROLINA
DEPT. OF TRANSPORTATION
DIVISION OF HIGHWAYS
RALEIGH, N.C.

1-12

ENGLISH STANDARD DRAWING FOR

BRICK ENDWALL FOR SINGLE AND DOUBLE PIPE CULVERTS

17" X 13" THRU 71" X 47" PIPE ARCH 2 2/3 " X ½" CORRUGATIONS - 90° SKEW

SHEET 1 OF 1

838.14

GENERAL NOTES:

-ALL MORTAR JOINTS ARE ½" ± ⅛".

-BOND BRICKWORK WITH FULL HEADERS EVERY THREE COURSES.

-CONCAVE TOOL ALL EXPOSED JOINTS.

-CONSTRUCT THE BASE WITH FORMS.

-USE CLASS 'B' CONCRETE.

-PAY FOR CONCRETE AS BRICK MASONRY.

-CONCRETE BRICK MAY BE USED IN LIEU OF CLAY BRICK.

-JUMBO BRICK WILL BE PERMITTED.

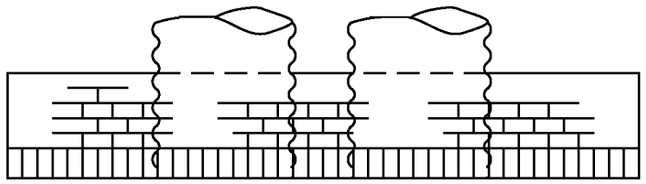

PLAN

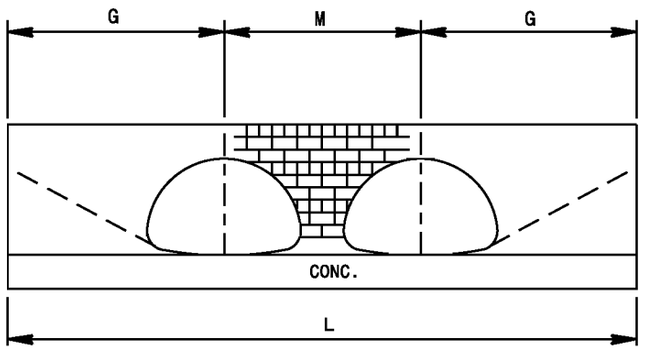

ELEVATION

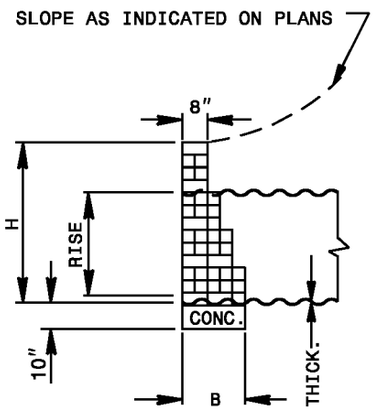

END ELEVATION

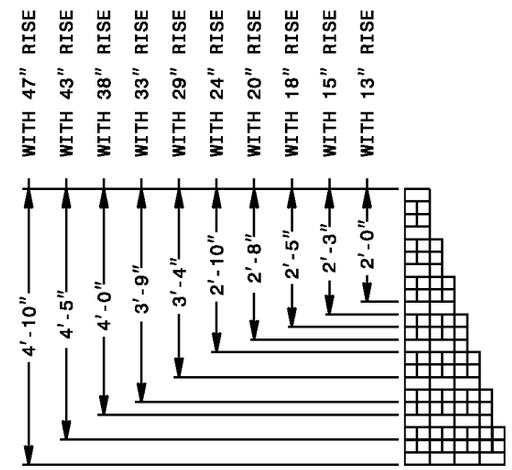

TYPICAL SECTION THRU WALL

DIMENSIONS AND BRICK QUANTITIES												
COMMON DIMENSIONS						SINGLE PIPE			DOUBLE PIPE			
SPAN	RISE	GAGE	H	B	G	L	BRICK YD³	CONC. TD³	M	L	BRICK YD³	CONC. YD³
17"	13"	16	2'-0"	1'-4"	2'-9"	5'-6"	0.331	0.226	1'-10"	7'-4"	0.411	0.302
21"	15"	16	2'-3"	1'-4"	3'-1"	6'-2"	0.421	0.254	2'-4"	8'-6"	0.538	0.350
24"	18"	16	2'-5"	1'-8"	3'-7"	7'-2"	0.568	0.369	2'-8"	9'-10"	0.715	0.506
28"	20"	14	2'-8"	1'-8"	3'-11"	7'-10"	0.704	0.403	3'-1"	10'-11"	0.900	0.562
35"	24"	14	2'-10"	1'-8"	4'-7"	9'-2"	0.889	0.472	3'-10"	13'-0"	1.135	0.669
42"	29"	14	3'-4"	2'-0"	5'-5"	10'-10"	1.320	0.669	4'-8"	15'-6"	1.692	0.957
49"	33"	12	3'-9"	2'-4"	6'-1"	12'-2"	2.000	0.876	5'-5"	17'-7"	2.610	1.266
57"	38"	12	4'-0"	2'-4"	6'-11"	13'-10"	2.428	0.996	6'-4"	20'-2"	3.170	1.452
64"	43"	10	4'-5"	2'-8"	7'-9"	15'-6"	3.209	1.276	7'-1"	22'-7"	4.178	1.859
71"	47"	10	4'-10"	2'-8"	8'-10"	17'-8"	4.282	1.454	7'-10"	25'-6"	5.515	2.100

STATE OF
NORTH CAROLINA
DEPT. OF TRANSPORTATION
DIVISION OF HIGHWAYS
RALEIGH, N.C.

1-12

ENGLISH STANDARD DRAWING FOR

BRICK ENDWALL FOR SINGLE AND DOUBLE PIPE CULVERTS

17" X 13" THRU 71" X 47" PIPE ARCH 2 2/3 " X ½" CORRUGATIONS - 90° SKEW

SHEET 1 OF 1

838.14

STATE OF
NORTH CAROLINA
DEPT. OF TRANSPORTATION
DIVISION OF HIGHWAYS
RALEIGH, N.C.

1-12

ENGLISH STANDARD DRAWING FOR

BRICK "L" ENDWALL FOR SINGLE PIPE CULVERTS

15" THRU 48" PIPE

SHEET 1 OF 1

838.15

GENERAL NOTES:

-ALL MORTAR JOINTS ARE ½" ± ⅛".

-BOND BRICKWORK WITH FULL HEADERS EVERY THREE COURSES.

-CONCAVE TOOL ALL EXPOSED JOINTS.

-DO NOT INTERPRET WALL THICKNESS (T) SHOWN AS THE THICKNESS ACCEPTABLE, BUT IS USED ONLY IN COMPUTING ENDWALL DIMENSIONS AND QUANTITIES.

-CONSTRUCT THE BASE WITH FORMS.

-USE CLASS 'B' CONCRETE.

-PAY FOR CONCRETE AS BRICK MASONRY.

-CONCRETE BRICK MAY BE USED IN LIEU OF CLAY BRICK.

-JUMBO BRICK WILL BE PERMITTED.

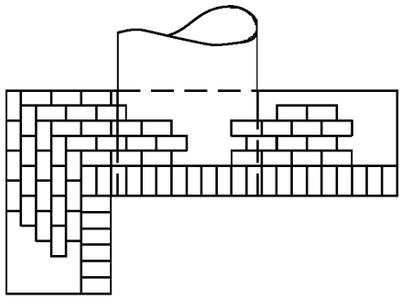

PLAN

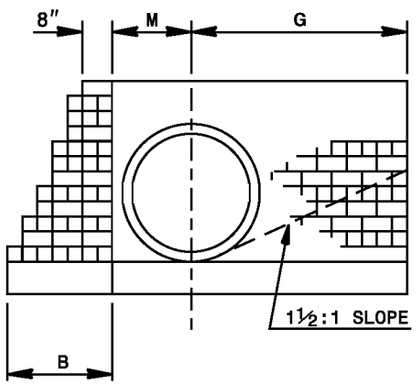

ELEVATION

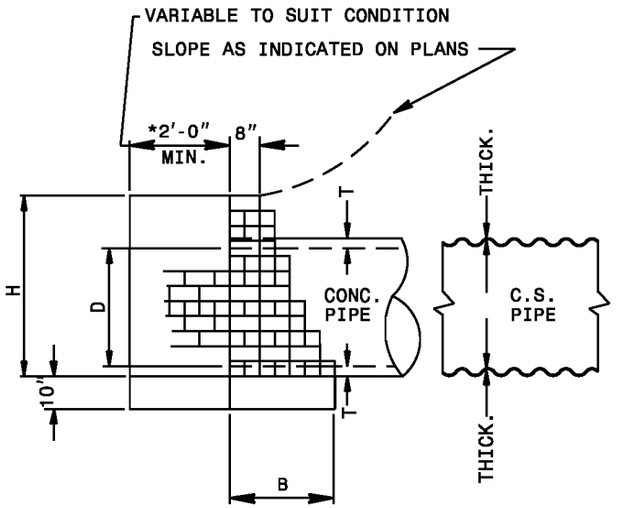

END ELEVATION

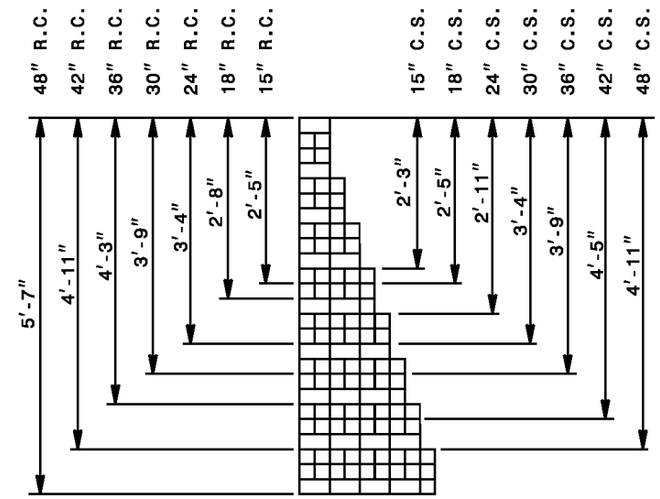

TYPICAL SECTION THRU WALL

*QUANTITIES BASED ON 2'-0"

DIMENSIONS AND CONCRETE QUANTITIES													
COMMON DIMENSIONS						USING R.C.P.		COMMON DIMENSIONS				USING C.S.P.	
D	H	B	G	M	T	BRICK YD³	CONC. YD³	H	B	G	M	BRICK YD³	CONC. YD³
15"	2'-5"	1'-8"	2'-10"	1'-0"	1⅞"	0.562	0.386	2'-3"	1'-4"	2'-9"	0'-11"	0.480	0.288
18"	2'-8"	1'-8"	3'-2"	1'-2"	2"	0.691	0.412	2'-5"	1'-8"	3'-0"	1'-0"	0.581	0.394
24"	3'-4"	2'-0"	4'-1"	1'-5"	3"	1.123	0.586	2'-11"	1'-8"	3'-9"	1'-3"	1.840	0.446
30"	3'-9"	2'-4"	4'-8"	1'-9"	3½"	1.513	0.774	3'-4"	2'-0"	4'-5"	1'-6"	1.167	0.612
36"	4'-3"	2'-4"	5'-5"	2'-0"	4"	1.958	0.846	3'-9"	2'-4"	5'-0"	1'-9"	1.562	0.798
42"	4'-11"	2'-8"	6'-4"	2'-4"	5¼"	2.841	1.097	4'-5"	2'-8"	6'-0"	2'-0"	2.318	1.043
48"	5'-7"	3'-0"	7'-3"	2'-8"	5¾"	3.865	1.381	4'-11"	2'-8"	6'-9"	2'-3"	2.929	1.125

STATE OF
NORTH CAROLINA
DEPT. OF TRANSPORTATION
DIVISION OF HIGHWAYS
RALEIGH, N.C.

1-12

ENGLISH STANDARD DRAWING FOR

BRICK "L" ENDWALL FOR SINGLE PIPE CULVERTS

15" THRU 48" PIPE

SHEET 1 OF 1

838.15

STATE OF
NORTH CAROLINA
DEPT. OF TRANSPORTATION
DIVISION OF HIGHWAYS
RALEIGH, N.C.

1-12

ENGLISH STANDARD DRAWING FOR

BRICK "L" ENDWALL FOR SINGLE PIPE CULVERTS

17" X 13" THRU 71" X 47" PIPE ARCH 2 2/3 " X 1/2" CORRUGATIONS

SHEET 1 OF 1

838.16

GENERAL NOTES:

-ALL MORTAR JOINTS ARE ½" ± ⅛".

-BOND BRICKWORK WITH FULL HEADERS EVERY THREE COURSES.

-CONCAVE TOOL ALL EXPOSED JOINTS.

-CONSTRUCT THE BASE WITH FORMS.

-USE CLASS 'B' CONCRETE.

-PAY FOR CONCRETE AS BRICK MASONRY.

-CONCRETE BRICK MAY BE USED IN LIEU OF CLAY BRICK.

-JUMBO BRICK WILL BE PERMITTED.

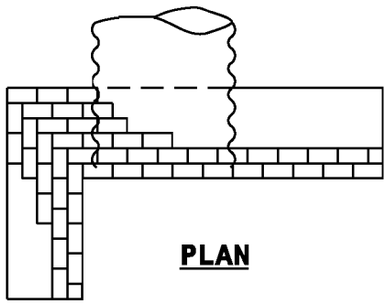

PLAN

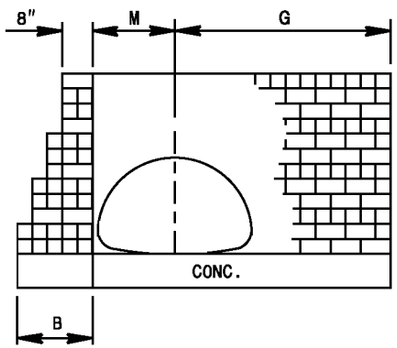

ELEVATION

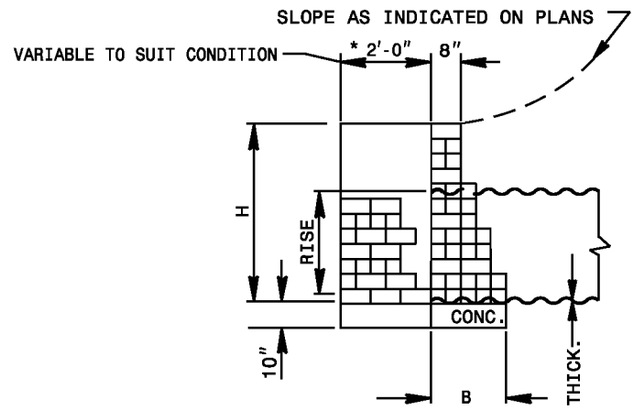

END ELEVATION

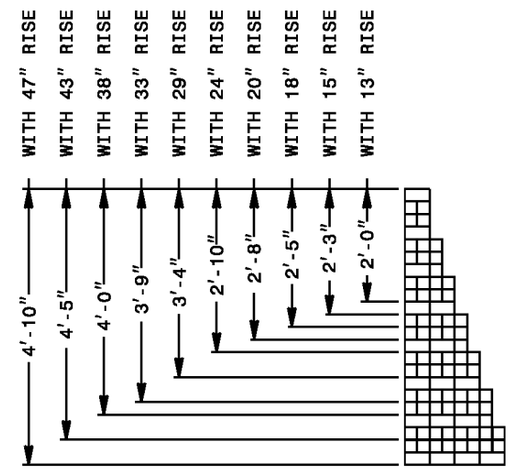

TYPICAL SECTION THRU WALL

DIMENSIONS AND QUANTITIES								
COMMON DIMENSIONS							QUANTITIES	
SPAN	RISE	GAGE	H	B	C	M	BRICK YD³	CONC. YD³
17"	13"	16	2'-0"	1'-4"	2'-9"	1'-0"	0.417	0.291
21"	15"	16	2'-3"	1'-4"	3'-1"	1'-2"	0.511	0.312
24"	18"	16	2'-5"	1'-8"	3'-7"	1'-3"	0.643	0.437
28"	20"	14	2'-8"	1'-8"	3'-11"	1'-5"	0.780	0.463
35"	24"	14	2'-10"	1'-8"	4'-7"	1'-9"	0.940	0.514
42"	29"	14	3'-4"	2'-0"	5'-5"	2'-0"	1.320	0.705
49"	33"	12	3'-9"	2'-4"	6'-1"	2'-4"	1.763	0.918
57"	38"	12	4'-0"	2'-4"	6'-11"	2'-8"	2.124	1.002
64"	43"	10	4'-5"	2'-8"	7'-9"	2'-11"	2.690	1.262
71"	47"	10	4'-10"	2'-8"	8'-10"	3'-3"	3.500	1.379

* QUANTITIES BASED OF 2'-0"

STATE OF
NORTH CAROLINA
DEPT. OF TRANSPORTATION
DIVISION OF HIGHWAYS
RALEIGH, N.C.

1-12

ENGLISH STANDARD DRAWING FOR

BRICK "L" ENDWALL FOR SINGLE PIPE CULVERTS

17" X 13" THRU 71" X 47" PIPE ARCH 2 2/3 " X 1/2" CORRUGATIONS

SHEET 1 OF 1

838.16

STATE OF
NORTH CAROLINA
DEPT. OF TRANSPORTATION
DIVISION OF HIGHWAYS
RALEIGH, N.C.

1-12

ENGLISH STANDARD DRAWING FOR

BRICK ENDWALL FOR SINGLE AND DOUBLE PIPE CULVERTS

40"X31" THRU 66"X51" PIPE ARCH 3"X1" CORRUGATIONS - 90° SKEW

SHEET 1 OF 1

838.17

GENERAL NOTES:

-ALL MORTAR JOINTS ARE ½" ± ⅛".

-BOND BRICKWORK WITH FULL HEADERS EVERY THREE COURSES.

-CONCAVE TOOL ALL EXPOSED JOINTS.

-CONSTRUCT THE BASE WITH FORMS.

-USE CLASS 'B' CONCRETE.

-PAY FOR CONCRETE AS BRICK MASONRY.

-CONCRETE BRICK MAY BE USED IN LIEU OF CLAY BRICK.

-JUMBO BRICK WILL BE PERMITTED.

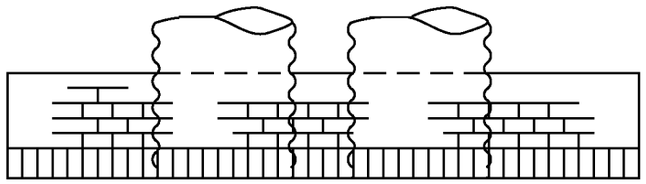

PLAN

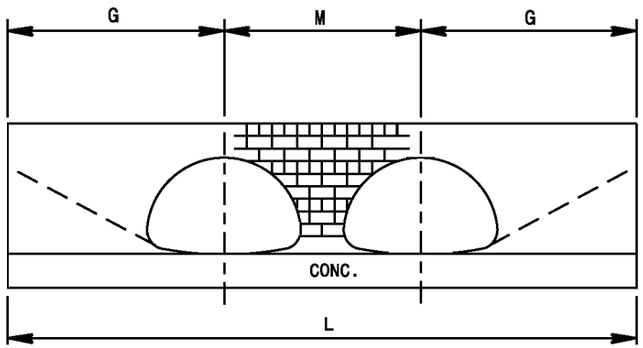

ELEVATION

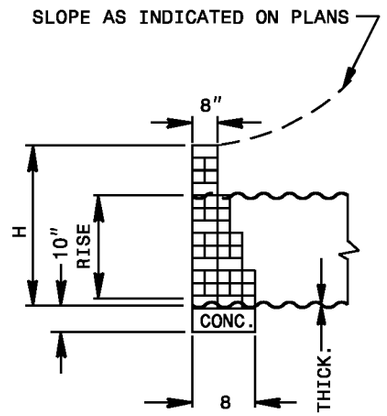

END ELEVATION

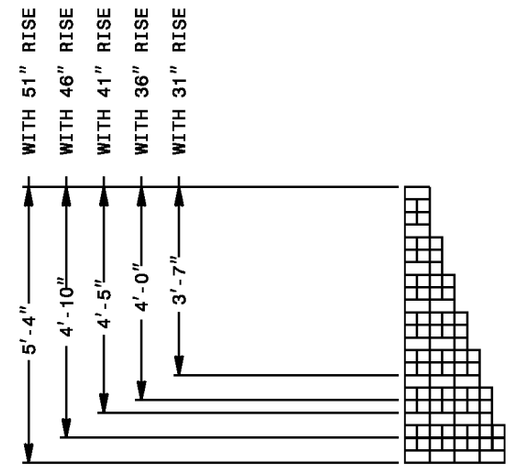

TYPICAL SECTION THRU WALL

DIMENSIONS AND BRICK QUANTITIES

COMMON DIMENSIONS						SINGLE PIPE			DOUBLE PIPE			
SPAN	RISE	GAGE	H	B	G	L	BRICK YD^3	CONC. YD^3	M	L	BRICK YD^3	CONC. YD^3
40"	31"	0.109	3'-7"	2'-0"	5'-8"	11'-4"	1.572	0.700	4'-5"	15'-9"	1.968	0.972
46"	36"	0.109	4'-0"	2'-4"	6'-5"	12'-10"	2.154	0.924	5'-1"	17'-11"	2.692	1.290
53"	41"	0.109	4'-5"	2'-8"	7'-2"	14'-4"	2.848	1.180	5'-10"	20'-2"	3.575	1.660
60"	46"	0.109	4'-10"	2'-8"	8'-0"	16'-0"	3.726	1.317	6'-8"	22'-8"	4.712	1.866
66"	51"	0.109	5'-4"	3'-0"	8'-10"	17'-8"	4.787	1.636	7'-4"	25'-0"	6.031	2.315

STATE OF
NORTH CAROLINA
DEPT. OF TRANSPORTATION
DIVISION OF HIGHWAYS
RALEIGH, N.C.

1-12

ENGLISH STANDARD DRAWING FOR

BRICK ENDWALL FOR SINGLE AND DOUBLE PIPE CULVERTS

40"X31" THRU 66"X51" PIPE ARCH 3"X1" CORRUGATIONS - 90° SKEW

SHEET 1 OF 1

838.17

STATE OF
NORTH CAROLINA
DEPT. OF TRANSPORTATION
DIVISION OF HIGHWAYS
RALEIGH, N.C.

1-12

ENGLISH STANDARD DRAWING FOR

BRICK ENDWALL FOR SINGLE PIPE CULVERTS

40"X31" THRU 66"X51" PIPE ARCH 3"X1" CORRUGATIONS

SHEET 1 OF 1

838.18

GENERAL NOTES:

-ALL MORTAR JOINTS ARE ½" ± ⅛".

-BOND BRICKWORK WITH FULL HEADERS EVERY THREE COURSES.

-CONCAVE TOOL ALL EXPOSED JOINTS.

-CONSTRUCT THE BASE WITH FORMS.

-USE CLASS 'B' CONCRETE.

-PAY FOR CONCRETE AS BRICK MASONRY.

-CONCRETE BRICK MAY BE USED IN LIEU OF CLAY BRICK.

-JUMBO BRICK WILL BE PERMITTED.

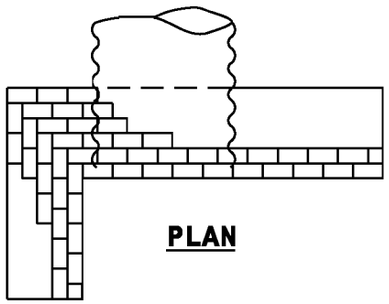

PLAN

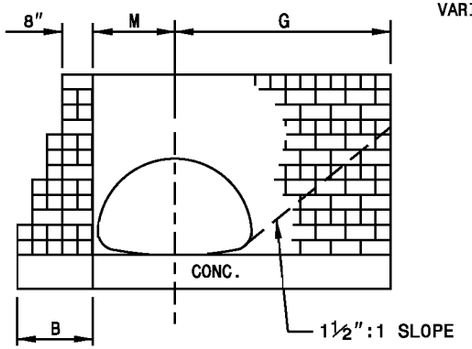

ELEVATION

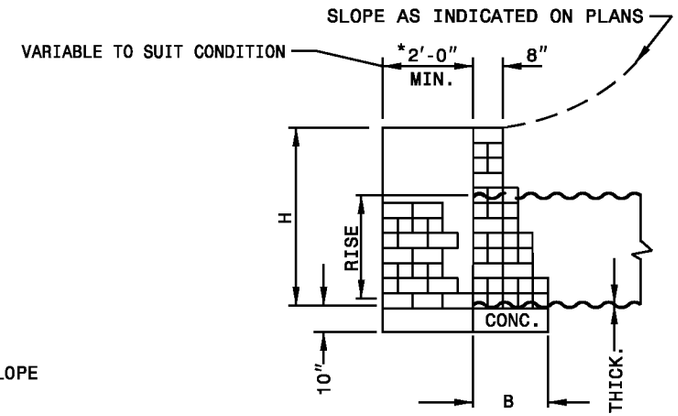

END ELEVATION

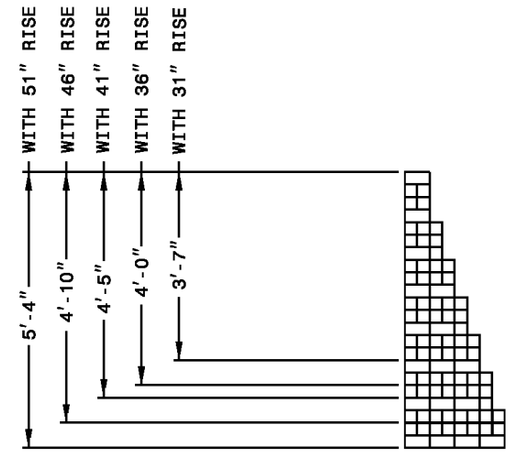

TYPICAL SECTION THRU WALL

DIMENSIONS AND QUANTITIES								
COMMON DIMENSIONS							QUANTITIES	
SPAN	RISE	THICK	H	B	G	M	BRICK YD^3	CONC. YD^3
40"	31"	0.109	3'-7"	2'-0"	5'-8"	1'-11"	1.525	0.715
46"	36"	0.109	4'-0"	2'-4"	6'-5"	2'-2"	2.025	0.930
53"	41"	0.109	4'-5"	2'-8"	7'-2"	2'-6"	2.626	1.180
60"	46"	0.109	4'-10"	2'-8"	8'-0"	2'-9"	3.332	1.269
66"	51"	0.109	5'-4"	3'-0"	8'-10"	3'-0"	4.074	1.560

* QUANTITIES BASED OF 2'-0"

STATE OF
NORTH CAROLINA
DEPT. OF TRANSPORTATION
DIVISION OF HIGHWAYS
RALEIGH, N.C.

1-12

ENGLISH STANDARD DRAWING FOR

BRICK ENDWALL FOR SINGLE PIPE CULVERTS

40"X31" THRU 66"X51" PIPE ARCH 3"X1" CORRUGATIONS

SHEET 1 OF 1

838.18

STATE OF
NORTH CAROLINA
DEPT. OF TRANSPORTATION
DIVISION OF HIGHWAYS
RALEIGH, N.C.

1-12

ENGLISH STANDARD DRAWING FOR

BRICK ENDWALL FOR OUTFALL

4", 6" OR 8" PIPE

SHEET 1 OF 1

838.20

GENERAL NOTES:

-ALL MORTAR JOINTS ARE ½" ± ⅛".

-BOND BRICKWORK WITH FULL HEADERS EVERY THREE COURSES.

-CONCAVE TOOL ALL EXPOSED JOINTS.

-CONCRETE BRICK MAY BE USED IN LIEU OF CLAY BRICK.

-JUMBO BRICK WILL BE PERMITTED.

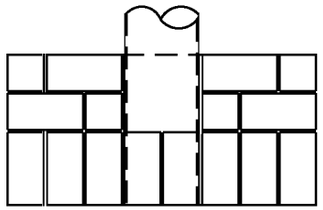

PLAN

CONCRETE QUANTITIES				
D	H	REINF. CONC.	BIT. FIBER	CORR. PLASTIC OR METAL
		YD^3	YD^3	YD^3
4"	1'-9"	0.140	0.141	0.142
6"	2'-0"	0.163	0.164	0.166
8"	2'-3"	0.186	0.187	0.190

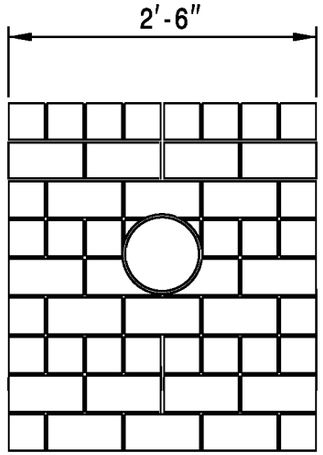

ELEVATION

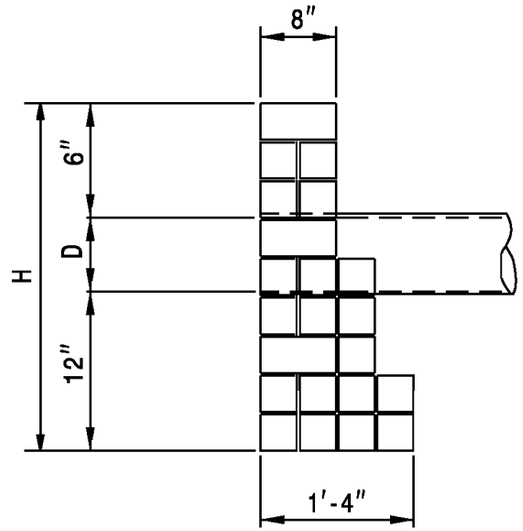

END ELEVATION

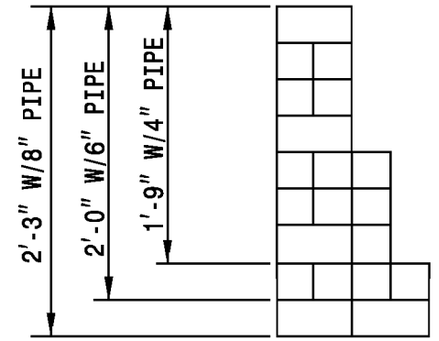

TYPICAL SECTION THRU WALL

STATE OF
NORTH CAROLINA
DEPT. OF TRANSPORTATION
DIVISION OF HIGHWAYS
RALEIGH, N.C.

1-12

ENGLISH STANDARD DRAWING FOR

BRICK ENDWALL FOR OUTFALL

4", 6" OR 8" PIPE

SHEET 1 OF 1

838.20

STATE OF
NORTH CAROLINA
DEPT. OF TRANSPORTATION
DIVISION OF HIGHWAYS
RALEIGH, N.C.

1-12

ENGLISH STANDARD DRAWING FOR

REINFORCED CONCRETE ENDWALL

FOR SINGLE 54" PIPE - 90° SKEW

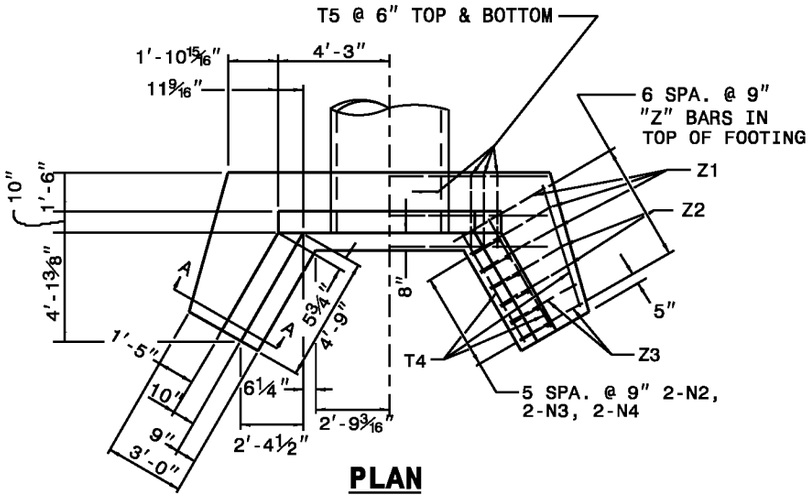

PLAN

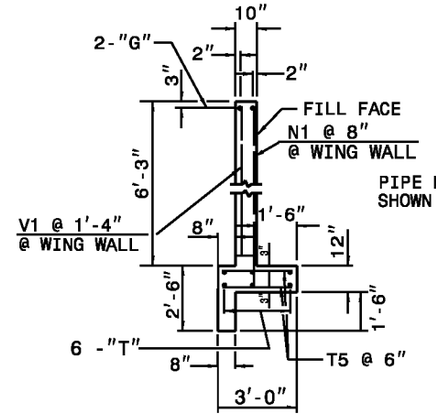

SECTION - BB

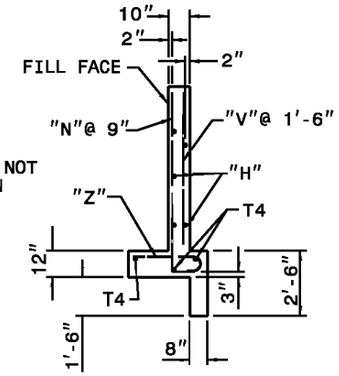

SECTION - AA

SEE STD. DWG. 838.45 FOR GENERAL NOTES.

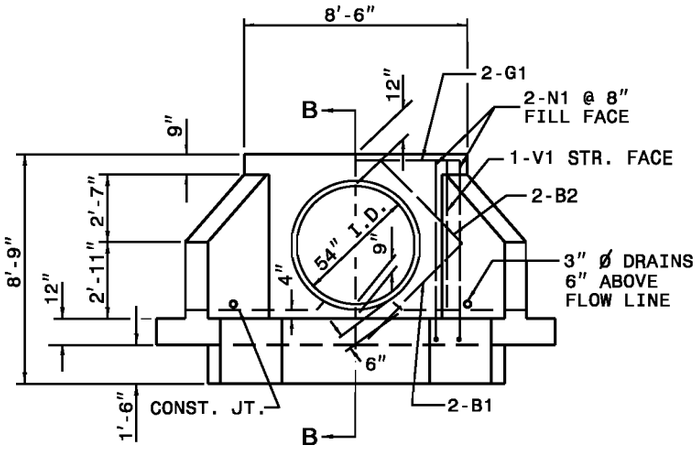

ELEVATION

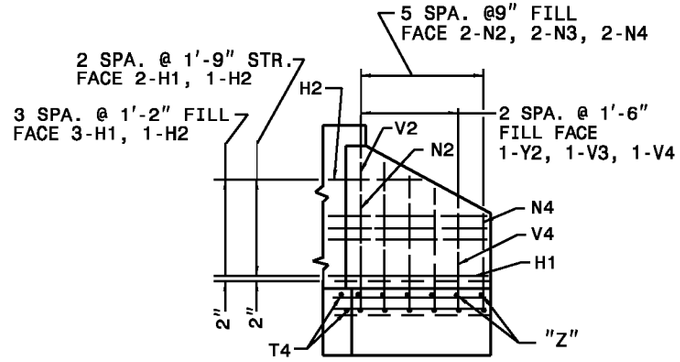

WING ELEVATION

BILL OF MATERIAL FOR ENDWALL				
REINF. STEEL			1 PIPE	
BAR	SIZE	LENGTH	NO.	WEIGHT
B1	#4	5'-6"	4	15
B2	#4	4'-6"	4	12
G1	#7	8'-2"	2	33
H1	#4	5'-6"	10	37
H2	#4	3'-6"	4	9
N1	#4	7'-11"	4	21
N2	#4	6'-7"	4	18
N3	#4	5'-8"	4	15
N4	#4	4'-9"	4	13
T1	#4	11'-10"	6	47
T4	#4	5'-3"	6	21
T5	#4	2'-6"	34	57
V1	#4	5'-9"	2	8
V2	#4	4'-10"	2	6
V3	#4	3'-11"	2	5
V4	#4	3'-1"	2	4
Z1	#4	3'-11"	6	16
Z2	#4	3'-6"	4	9
Z3	#4	3'-1"	4	8
REINF. STEEL LBS.				354
CON./R.C. CU. YDS				5.0

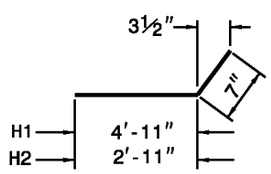

"H" BARS

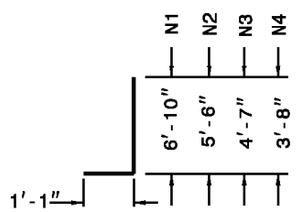

"N" BARS

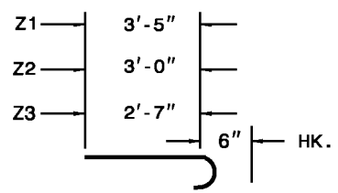

"Z" BARS

"H", "N", & "Z" BAR DIMENSIONS ARE OUT TO OUT.

STATE OF
NORTH CAROLINA
DEPT. OF TRANSPORTATION
DIVISION OF HIGHWAYS
RALEIGH, N.C.

1-12

ENGLISH STANDARD DRAWING FOR

REINFORCED CONCRETE ENDWALL

FOR SINGLE 54" PIPE - 90° SKEW

SHEET 1 OF 2

838.21

SHEET 1 OF 2

838.21

STATE OF NORTH CAROLINA
DEPT. OF TRANSPORTATION
DIVISION OF HIGHWAYS
RALEIGH, N.C.

1-12

ENGLISH STANDARD DRAWING FOR

REINFORCED CONCRETE ENDWALL

FOR SINGLE 54" PIPE - 90° SKEW

SHEET 2 OF 2

838.21

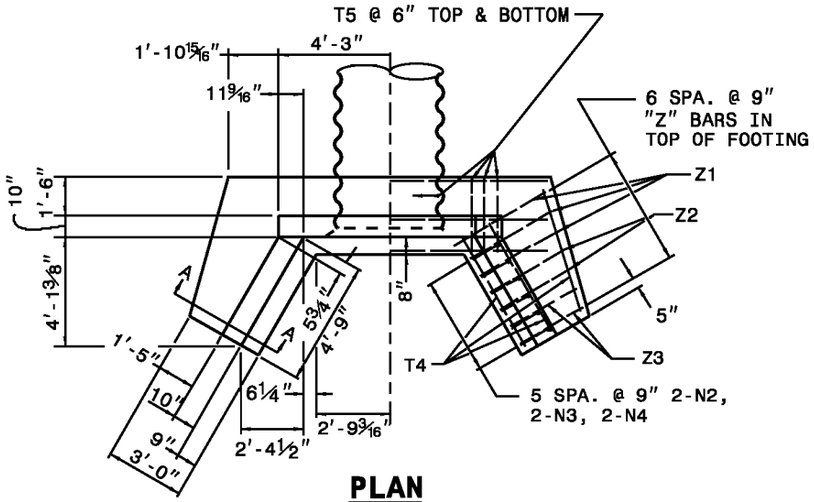

PLAN

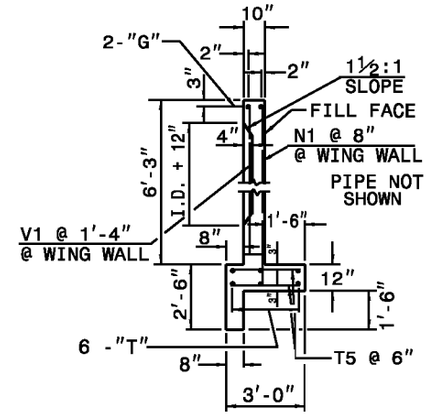

SECTION - BB

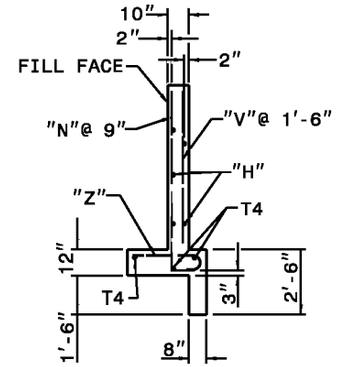

SECTION - AA

SEE STD. DWG. 838.45 FOR GENERAL NOTES.

BILL OF MATERIAL FOR ENDWALL				
REINF. STEEL			1 PIPE	
BAR	SIZE	LENGTH	NO.	WEIGHT
B1	#4	5'-6"	4	15
B2	#4	4'-6"	4	12
G1	#7	8'-2"	2	33
H1	#4	5'-6"	10	37
H2	#4	3'-6"	4	9
N1	#4	7'-11"	4	21
N2	#4	6'-7"	4	18
N3	#4	5'-8"	4	15
N4	#4	4'-9"	4	13
T1	#4	11'-10"	6	47
T4	#4	5'-3"	6	21
T5	#4	2'-6"	34	57
V1	#4	5'-9"	2	8
V2	#4	4'-10"	2	6
V3	#4	3'-11"	2	5
V4	#4	3'-1"	2	4
Z1	#4	3'-11"	6	16
Z2	#4	3'-6"	4	9
Z3	#4	3'-1"	4	8
REINF. STEEL LBS.				354
CON./C.S. CU. YDS			5.2	

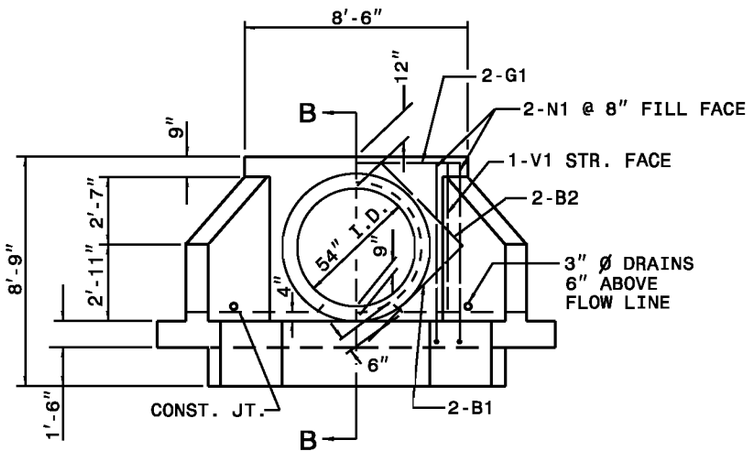

ELEVATION

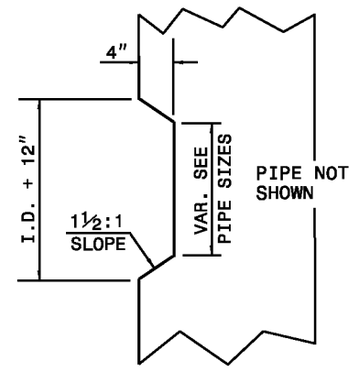

TAPER DETAIL

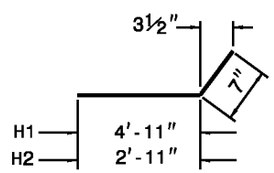

"H" BARS

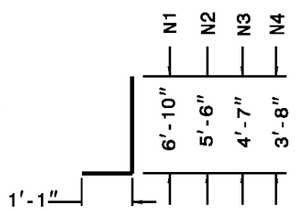

"N" BARS

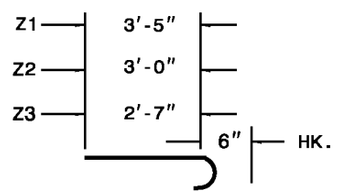

"Z" BARS

"H", "N", & "Z" BAR DIMENSIONS ARE OUT TO OUT.

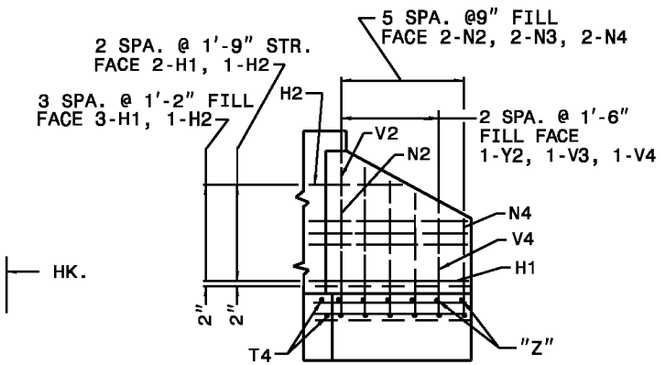

WING ELEVATION

STATE OF NORTH CAROLINA
DEPT. OF TRANSPORTATION
DIVISION OF HIGHWAYS
RALEIGH, N.C.

1-12

ENGLISH STANDARD DRAWING FOR

REINFORCED CONCRETE ENDWALL

FOR SINGLE 54" PIPE - 90° SKEW

SHEET 2 OF 2

838.21

STATE OF NORTH CAROLINA
DEPT. OF TRANSPORTATION
DIVISION OF HIGHWAYS
RALEIGH, N.C.

1-12

ENGLISH STANDARD DRAWING FOR

REINFORCED CONCRETE ENDWALL

FOR DOUBLE & TRIPLE 54" PIPE - 90° SKEW

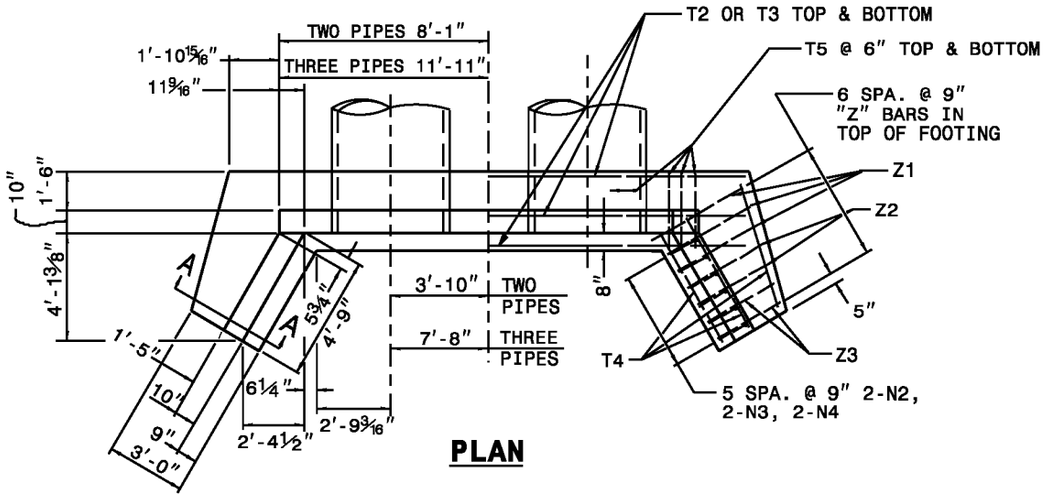

PLAN

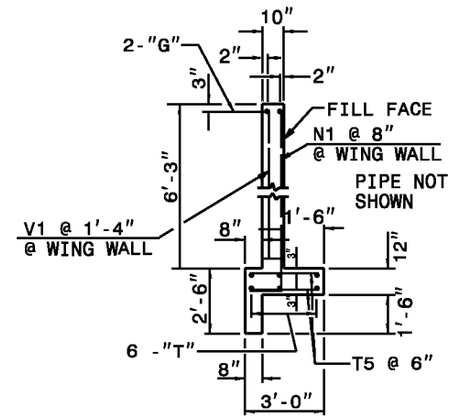

SECTION - BB

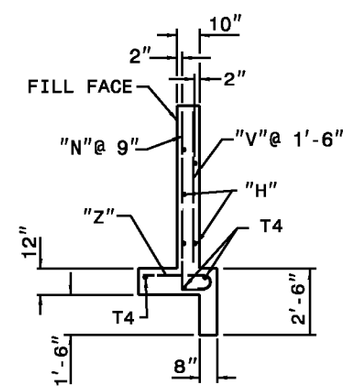

SECTION - AA

SEE STD. # 838.45 FOR GENERAL NOTES.

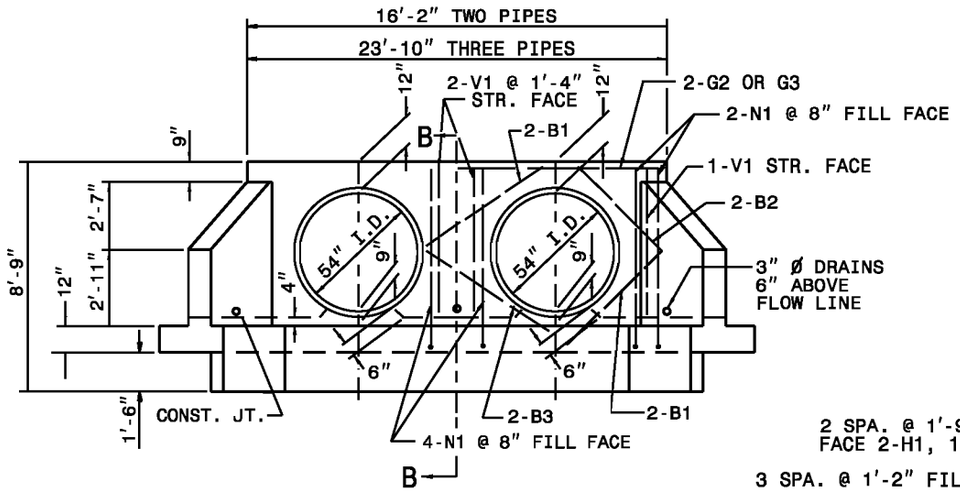

ELEVATION

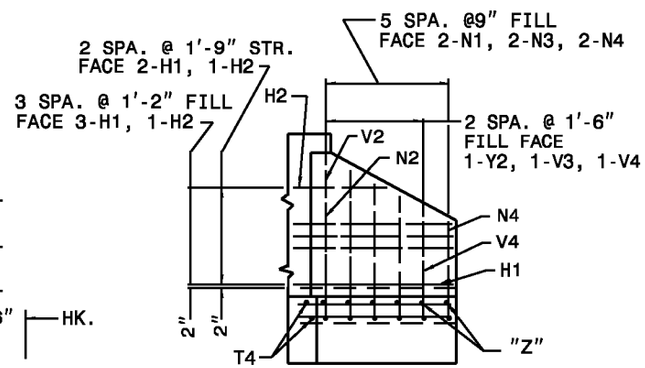

WING ELEVATION

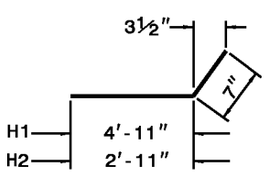

"H" BARS

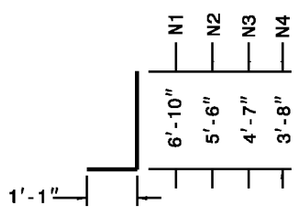

"N" BARS

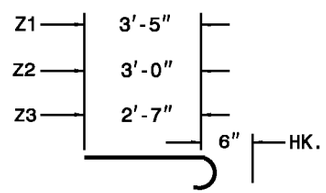

"Z" BARS

"H", "N", & "Z" BAR DIMENSIONS ARE OUT TO OUT.

BILL OF MATERIAL FOR ENDWALL						
REINF. STEEL			2 PIPES		3 PIPES	
BAR	SIZE	LENGTH	NO.	WEIGHT	NO.	WEIGHT
B1	#4	5'-6"	8	29	12	44
B2	#4	4'-6"	4	12	4	12
B3	#4	6'-0"	4	16	8	32
G1	#7	8'-2"	-	-	-	-
G2	#7	15'-10"	2	65	-	-
G3	#7	23'-6"	-	-	2	96
H1	#4	5'-6"	10	37	10	37
H2	#4	3'-6"	4	9	4	9
N1	#4	7'-11"	8	42	12	63
N2	#4	6'-7"	4	18	4	18
N3	#4	5'-8"	4	15	4	15
N4	#4	4'-9"	4	13	4	13
T1	#4	11'-10"	-	-	-	-
T2	#4	19'-6"	6	78	-	-
T3	#4	27'-2"	-	-	6	109
T4	#4	5'-3"	6	21	6	21
T5	#4	2'-6"	64	107	96	160
V1	#4	5'-9"	4	15	6	23
V2	#4	4'-10"	2	6	2	6
V3	#4	3'-11"	2	5	2	5
V4	#4	3'-1"	2	4	2	4
Z1	#4	3'-11"	6	16	6	16
Z2	#4	3'-6"	4	9	4	9
Z3	#4	3'-1"	4	8	4	8
REINF. STEEL LBS.				525		700
CON./R.C. CU. YDS			6.9		8.8	

SHEET 1 OF 2

838.22

STATE OF NORTH CAROLINA
DEPT. OF TRANSPORTATION
DIVISION OF HIGHWAYS
RALEIGH, N.C.

1-12

ENGLISH STANDARD DRAWING FOR

REINFORCED CONCRETE ENDWALL

FOR DOUBLE & TRIPLE 54" PIPE - 90° SKEW

SHEET 1 OF 2

838.22

STATE OF NORTH CAROLINA
DEPT. OF TRANSPORTATION
DIVISION OF HIGHWAYS
RALEIGH, N.C.

1-12

ENGLISH STANDARD DRAWING FOR

REINFORCED CONCRETE ENDWALL

FOR DOUBLE & TRIPLE 54" PIPE - 90° SKEW

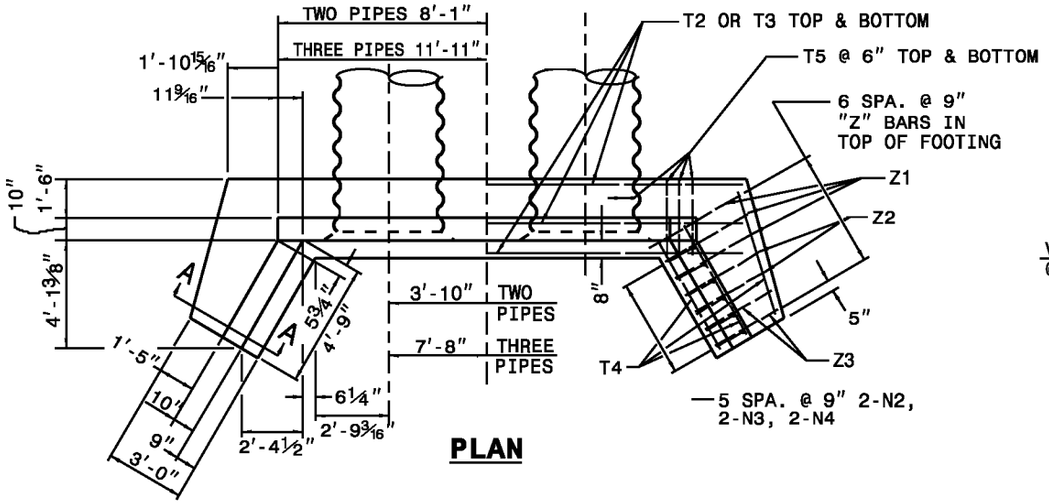

PLAN

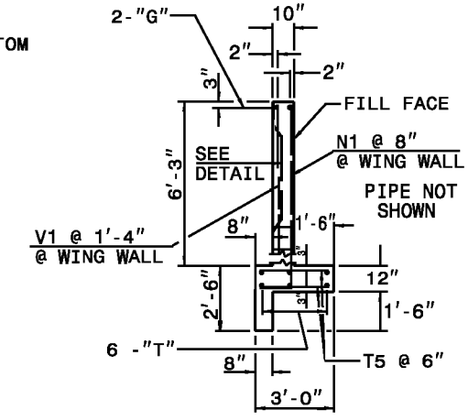

SECTION - BB

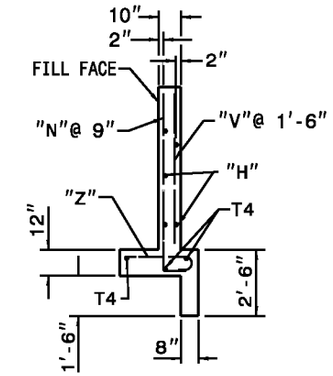

SECTION - AA

SEE STD. # 838.45 FOR GENERAL NOTES.

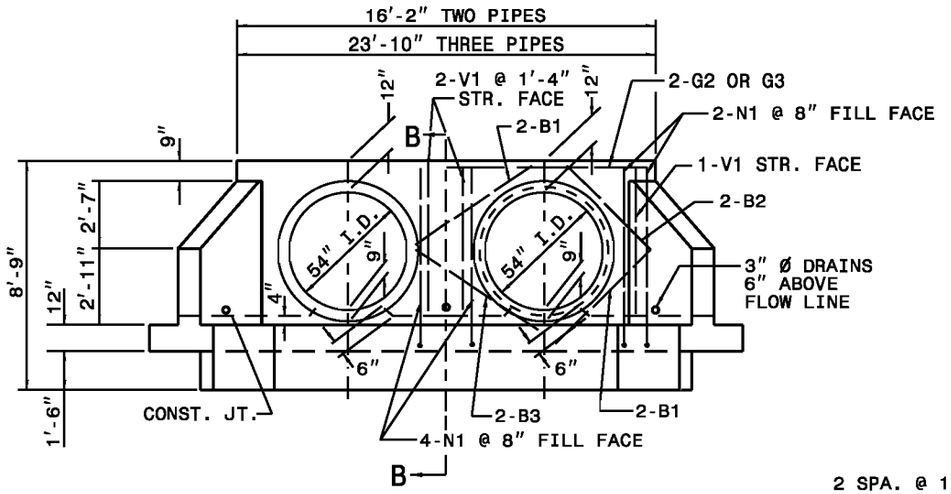

ELEVATION

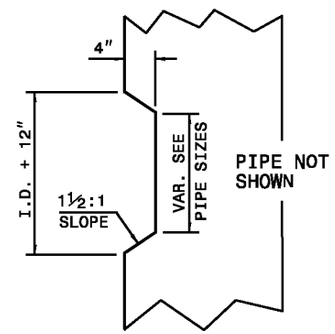

TAPER DETAIL

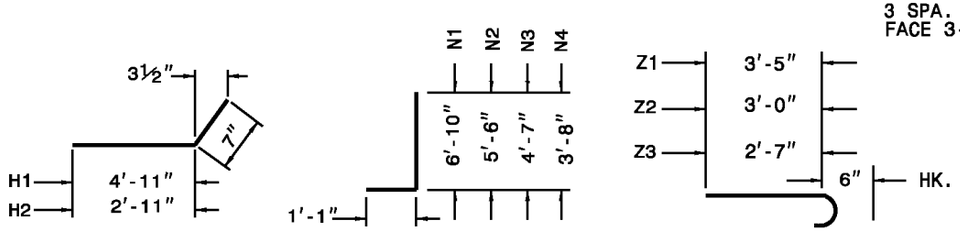

"H" BARS

"N" BARS

"Z" BARS

"H", "N", & "Z" BAR DIMENSIONS ARE OT TO OUT.

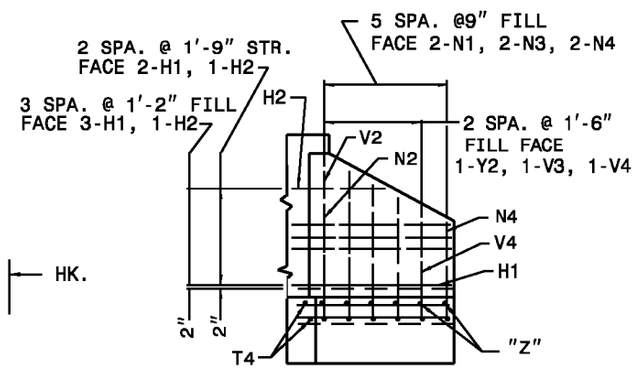

WING ELEVATION

BILL OF MATERIAL FOR ENDWALL

REINF. STEEL			2 PIPES		3 PIPES	
BAR	SIZE	LENGTH	NO.	WEIGHT	NO.	WEIGHT
B1	#4	5'-6"	8	29	12	44
B2	#4	4'-6"	4	12	4	12
B3	#4	6'-0"	4	16	8	32
G1	#7	8'-2"	-	-	-	-
G2	#7	15'-10"	2	65	-	-
G3	#7	23'-6"	-	-	2	96
H1	#4	5'-6"	10	37	10	37
H2	#4	3'-6"	4	9	4	9
N1	#4	7'-11"	8	42	12	63
N2	#4	6'-7"	4	18	4	18
N3	#4	5'-8"	4	15	4	15
N4	#4	4'-9"	4	13	4	13
T1	#4	11'-10"	-	-	-	-
T2	#4	19'-6"	6	78	-	-
T3	#4	27'-2"	-	-	6	109
T4	#4	5'-3"	6	21	6	21
T5	#4	2'-6"	64	107	96	160
V1	#4	5'-9"	4	15	6	23
V2	#4	4'-10"	2	6	2	6
V3	#4	3'-11"	2	5	2	5
V4	#4	3'-1"	2	4	2	4
Z1	#4	3'-11"	6	16	6	16
Z2	#4	3'-6"	4	9	4	9
Z3	#4	3'-1"	4	8	4	8
REINF. STEEL LBS.				525		700
CON./C.S. CU. YDS			7.3		9.4	

SHEET 2 OF 2

838.22

STATE OF NORTH CAROLINA
DEPT. OF TRANSPORTATION
DIVISION OF HIGHWAYS
RALEIGH, N.C.

1-12

ENGLISH STANDARD DRAWING FOR

REINFORCED CONCRETE ENDWALL

FOR DOUBLE & TRIPLE 54" PIPE - 90° SKEW

SHEET 2 OF 2

838.22

STATE OF
NORTH CAROLINA
DEPT. OF TRANSPORTATION
DIVISION OF HIGHWAYS
RALEIGH, N.C.

1-12

ENGLISH STANDARD DRAWING FOR

REINFORCED CONCRETE ENDWALL

FOR SINGLE 60" PIPE - 90° SKEW

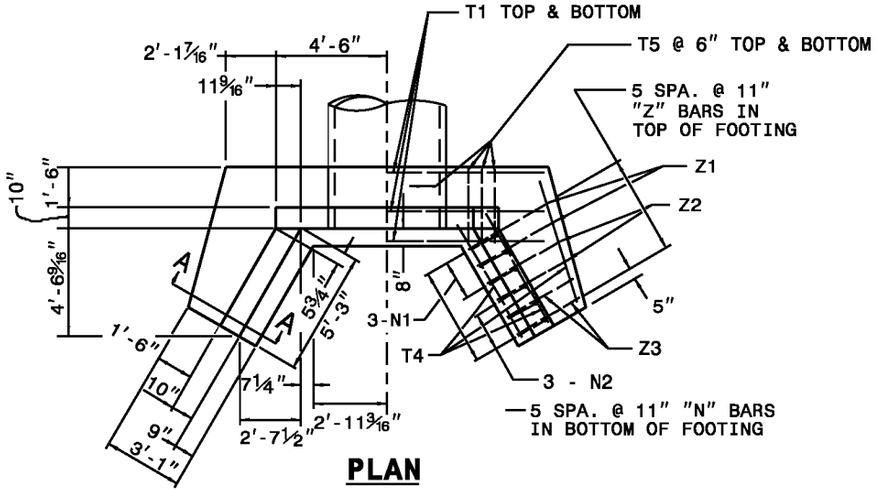

PLAN

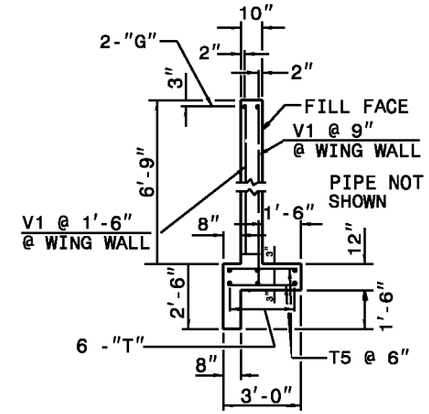

SECTION - BB

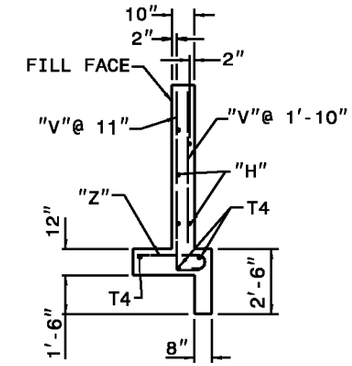

SECTION - AA

SEE STD. # 838.45 FOR GENERAL NOTES.

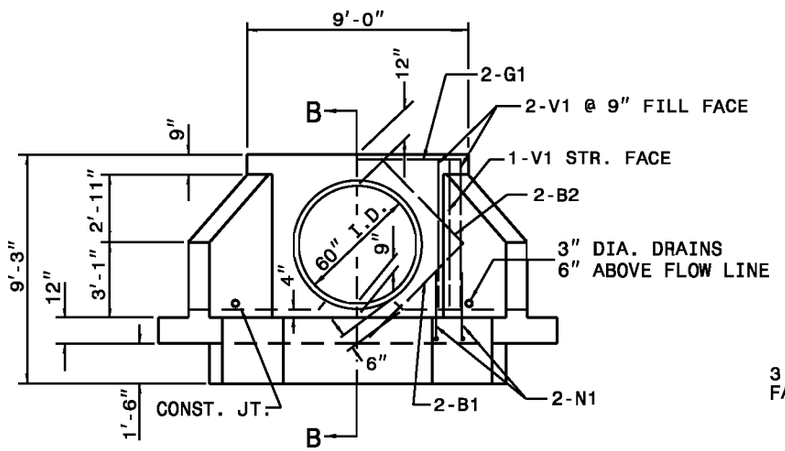

ELEVATION

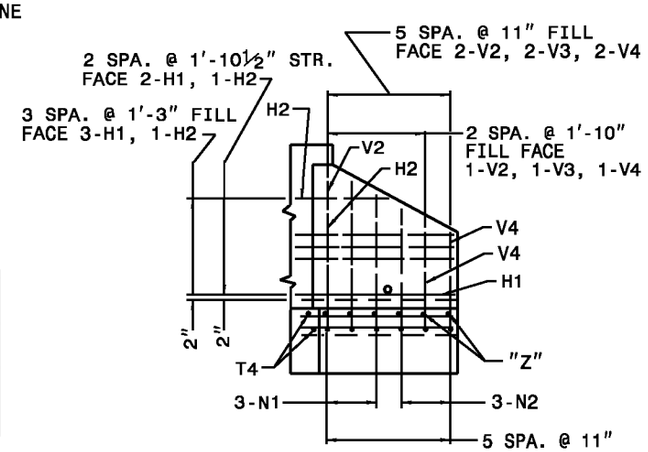

WING ELEVATION

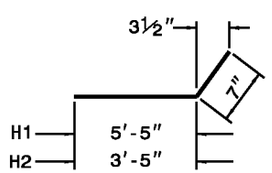

"H" BARS

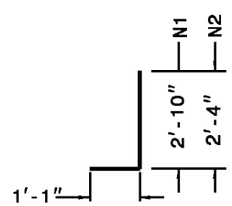

"N" BARS

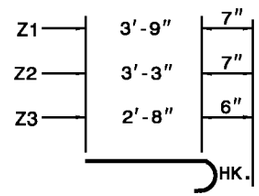

"Z" BARS

"H", "N", & "Z" BAR DIMENSIONS ARE OUT TO OUT.

BILL OF MATERIAL FOR ENDWALL

REINF. STEEL			1 PIPE	
BAR	SIZE	LENGTH	NO.	WEIGHT
B1	#4	5'-6"	4	15
B2	#4	4'-6"	4	12
G1	#7	8'-8"	2	35
H1	#4	6'-0"	10	40
H2	#4	4'-0"	4	11
N1	#5	3'-11"	10	41
N2	#4	3'-5"	6	14
T1	#4	12'-8"	6	51
T4	#4	5'-6"	6	22
T5	#4	2'-6"	36	60
V1	#4	6'-3"	6	25
V2	#4	5'-1"	6	20
V3	#4	3'-11"	6	16
V4	#4	2'-9"	6	11
Z1	#5	4'-4"	4	18
Z2	#4	3'-10"	4	10
Z3	#4	3'-2"	4	8
REINF. STEEL LBS.				409
CON./R.C. CU. YDS			5.6	

STATE OF
NORTH CAROLINA
DEPT. OF TRANSPORTATION
DIVISION OF HIGHWAYS
RALEIGH, N.C.

1-12

ENGLISH STANDARD DRAWING FOR

REINFORCED CONCRETE ENDWALL

FOR SINGLE 60" PIPE - 90° SKEW

STATE OF
NORTH CAROLINA
DEPT. OF TRANSPORTATION
DIVISION OF HIGHWAYS
RALEIGH, N.C.

1-12

ENGLISH STANDARD DRAWING FOR

REINFORCED CONCRETE ENDWALL

FOR SINGLE 60" PIPE - 90° SKEW

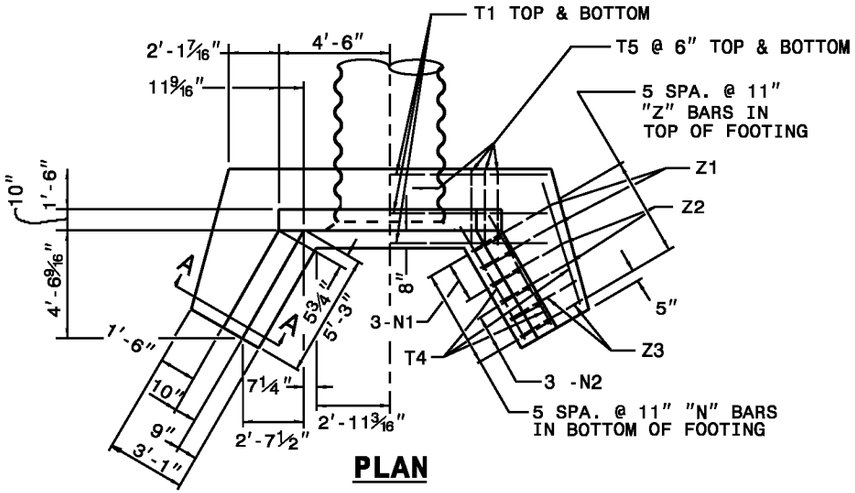

PLAN

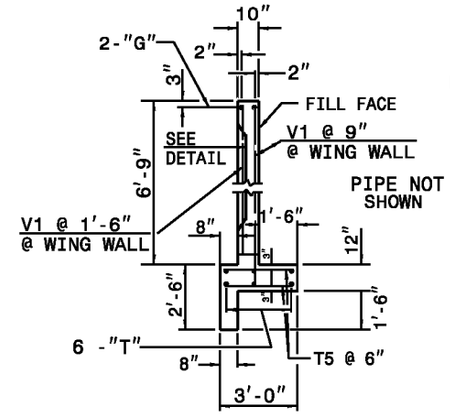

SECTION - BB

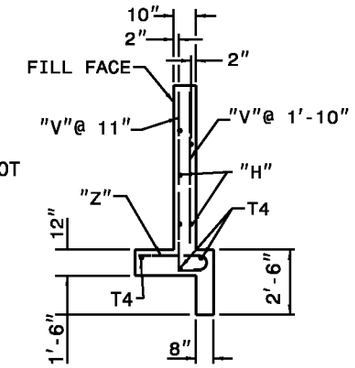

SECTION - AA

SEE STD. # 838.45 FOR GENERAL NOTES.

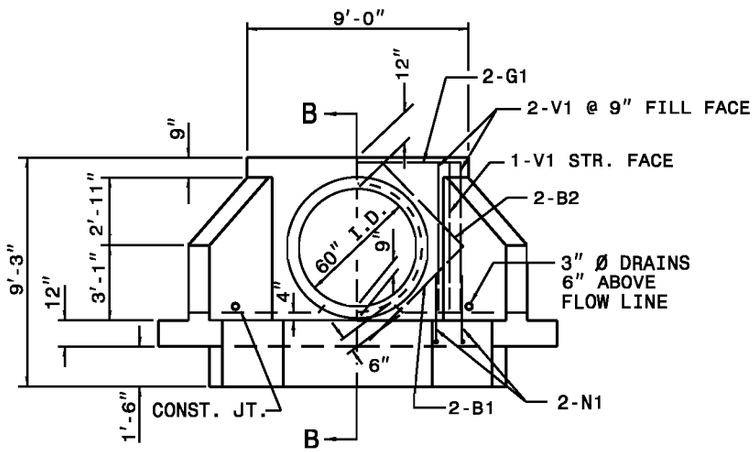

ELEVATION

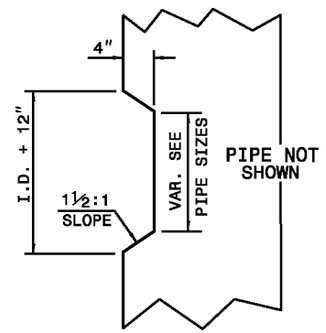

TAPER DETAIL

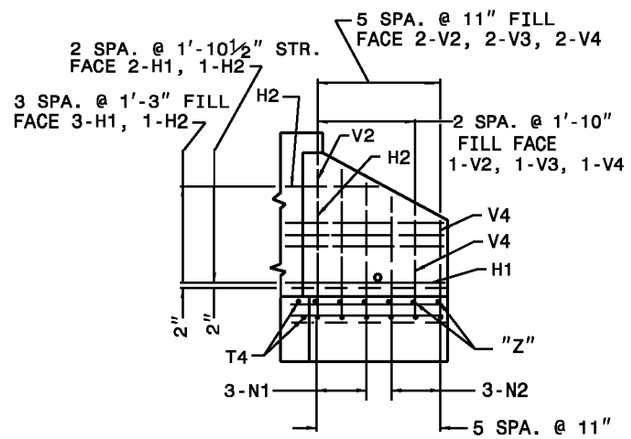

WING ELEVATION

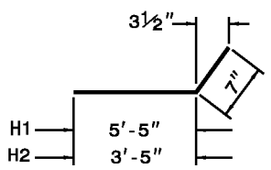

"H" BARS

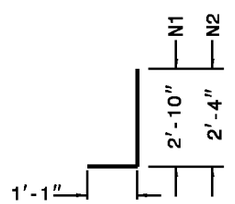

"N" BARS

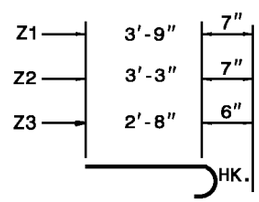

"Z" BARS

"H", "N", & "Z" BAR DIMENSIONS ARE OUT TOT OUT.

BILL OF MATERIAL FOR ENDWALL				
REINF. STEEL			1 PIPE	
BAR	SIZE	LENGTH	NO.	WEIGHT
B1	#4	5'-6"	4	15
B2	#4	4'-6"	4	12
G1	#7	8'-8"	2	35
H1	#4	6'-0"	10	40
H2	#4	4'-0"	4	11
N1	#5	3'-11"	10	41
N2	#4	3'-5"	6	14
T1	#4	12'-8"	6	51
T4	#4	5'-6"	6	22
T5	#4	2'-6"	36	60
V1	#4	6'-3"	6	25
V2	#4	5'-1"	6	20
V3	#4	3'-11"	6	16
V4	#4	2'-9"	6	11
Z1	#5	4'-4"	4	18
Z2	#4	3'-10"	4	10
Z3	#4	3'-2"	4	8
REINF. STEEL LBS.				409
CON./C.S. CU. YDS			5.9	

STATE OF
NORTH CAROLINA
DEPT. OF TRANSPORTATION
DIVISION OF HIGHWAYS
RALEIGH, N.C.

1-12

ENGLISH STANDARD DRAWING FOR

REINFORCED CONCRETE ENDWALL

FOR SINGLE 60" PIPE - 90° SKEW

SHEET 2 OF 2
838.27

STATE OF
NORTH CAROLINA
DEPT. OF TRANSPORTATION
DIVISION OF HIGHWAYS
RALEIGH, N.C.

1-12

ENGLISH STANDARD DRAWING FOR

REINFORCED CONCRETE ENDWALL

FOR DOUBLE & TRIPLE 60" PIPE - 90° SKEW

SHEET 1 OF 2

838.28

SEE STD. # 838.45 FOR GENERAL NOTES.

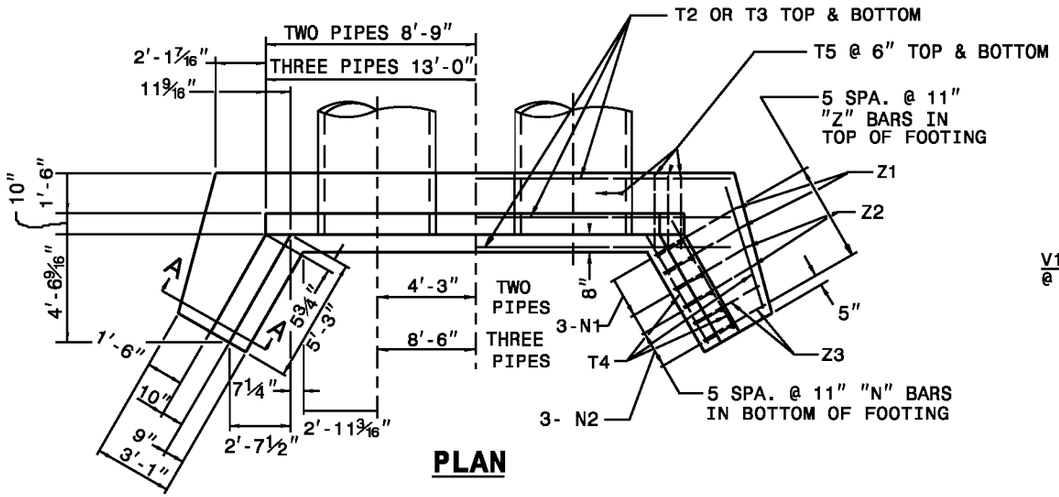

PLAN

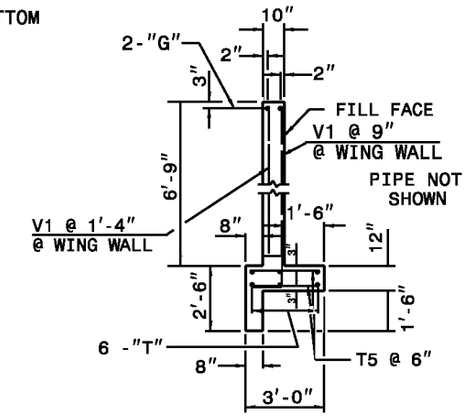

SECTION - BB

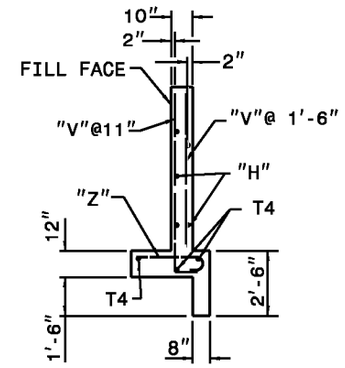

SECTION - AA

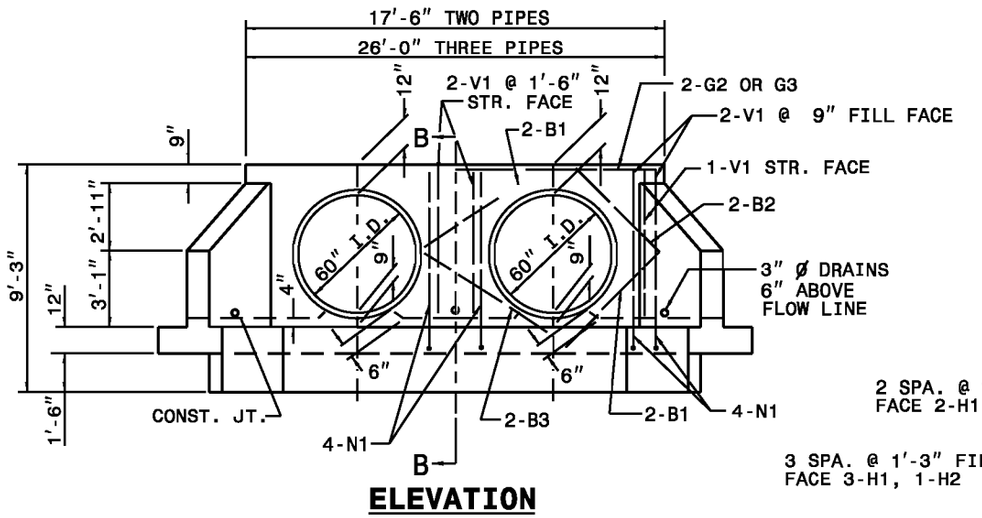

ELEVATION

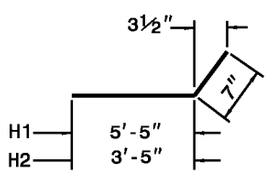

"H" BARS

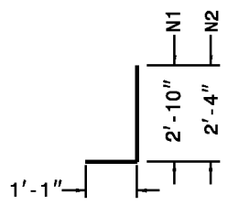

"N" BARS

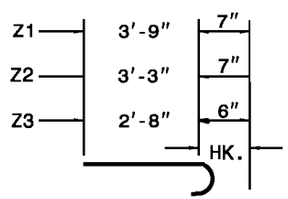

"Z" BARS

"H", "N", & "Z" BAR DIMENSIONS ARE OUT TO OUT.

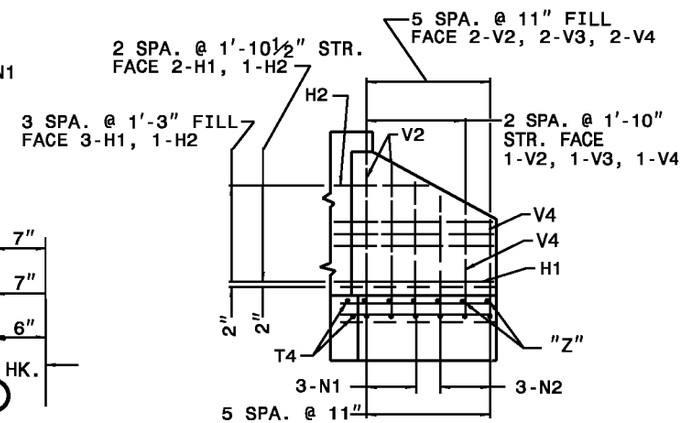

WING ELEVATION

BILL OF MATERIAL FOR ENDWALL						
REINF. STEEL			2 PIPES		3 PIPES	
BAR	SIZE	LENGTH	NO.	WEIGHT	NO.	WEIGHT
B1	#4	5'-6"	8	29	12	44
B2	#4	4'-6"	4	12	4	12
B3	#4	6'-6"	4	17	8	35
G2	#7	17'-2"	2	70	-	-
G3	#7	25'-8"	-	-	2	105
H1	#4	6'-0"	10	40	10	40
H2	#4	4'-0"	4	11	4	11
N1	#4	3'-11"	14	57	18	74
N2	#4	3'-5"	6	14	6	14
T1	#4	21'-2"	6	85	-	-
T2	#4	29'-8"			6	119
T4	#4	5'-6"	6	22	6	22
T5	#4	2'-6"	70	117	104	174
V1	#4	6'-3"	12	50	18	75
V2	#4	5'-1"	6	20	6	20
V3	#4	3'-11"	6	16	6	16
V4	#4	2'-9"	6	11	6	11
Z1	#5	4'-4"	4	18	4	18
Z2	#4	3'-10"	4	10	4	10
Z3	#4	3'-2"	4	8	4	8
REINF. STEEL LBS.				607		808
CON./R.C. CU. YDS			7.9		9.9	

STATE OF
NORTH CAROLINA
DEPT. OF TRANSPORTATION
DIVISION OF HIGHWAYS
RALEIGH, N.C.

1-12

ENGLISH STANDARD DRAWING FOR

REINFORCED CONCRETE ENDWALL

FOR DOUBLE & TRIPLE 60" PIPE - 90° SKEW

SHEET 1 OF 2

838.28

STATE OF
NORTH CAROLINA
DEPT. OF TRANSPORTATION
DIVISION OF HIGHWAYS
RALEIGH, N.C.

1-12

ENGLISH STANDARD DRAWING FOR

REINFORCED CONCRETE ENDWALL

FOR DOUBLE & TRIPLE 60" PIPE - 90° SKEW

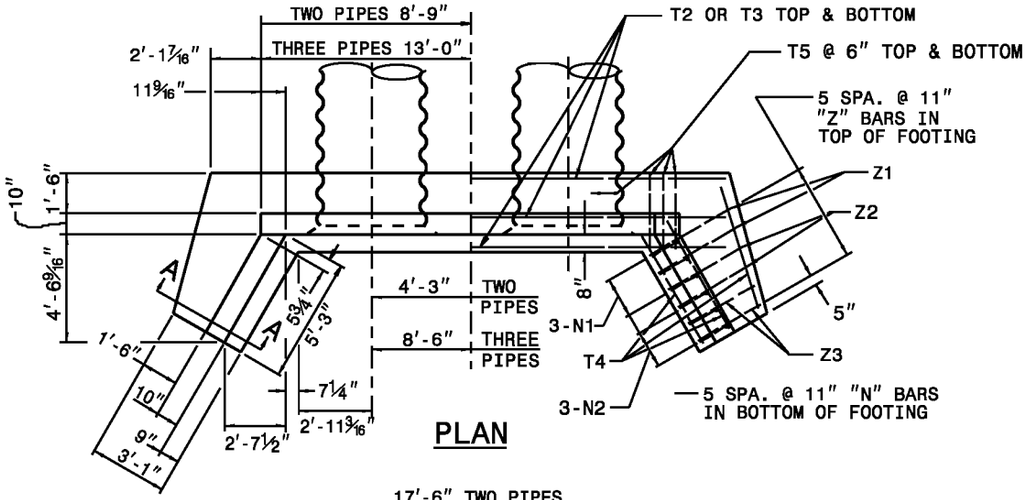

PLAN

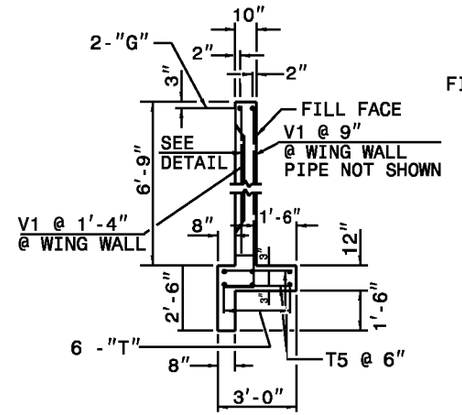

SECTION - BB

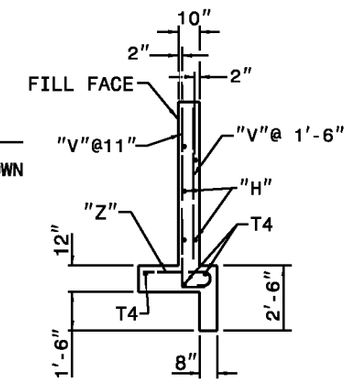

SECTION - AA

SEE STD. # 838.45 FOR GENERAL NOTES.

BILL OF MATERIAL FOR ENDWALL						
REINF. STEEL			2 PIPES		3 PIPES	
BAR	SIZE	LENGTH	NO.	WEIGHT	NO.	WEIGHT
B1	#4	5'-6"	8	29	12	44
B2	#4	4'-6"	4	12	4	12
B3	#4	6'-6"	4	17	8	35
G2	#7	17'-2"	2	70	-	-
G3	#7	25'-8"	-	-	2	105
H1	#4	6'-0"	10	40	10	40
H2	#4	4'-0"	4	11	4	11
N1	#4	3'-11"	14	57	18	74
N2	#4	3'-5"	6	14	6	14
T1	#4	21'-2"	6	85	-	-
T2	#4	29'-8"			6	119
T4	#4	5'-6"	6	22	6	22
T5	#4	2'-6"	70	117	104	174
V1	#4	6'-3"	12	50	18	75
V2	#4	5'-1"	6	20	6	20
V3	#4	3'-11"	6	16	6	16
V4	#4	2'-9"	6	11	6	11
Z1	#5	4'-4"	4	18	4	18
Z2	#4	3'-10"	4	10	4	10
Z3	#4	3'-2"	4	8	4	8
REINF. STEEL LBS.				607		808
CON./C.S. CU. YDS			8.3		10.7	

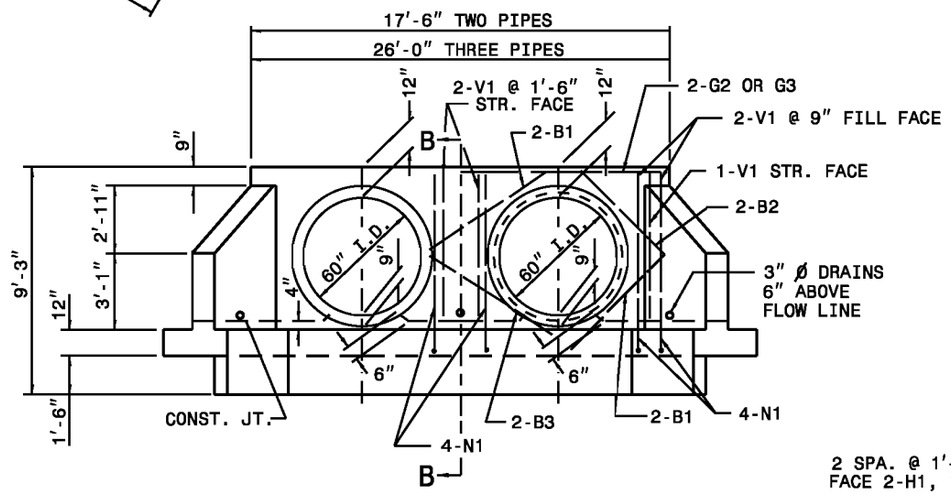

ELEVATION

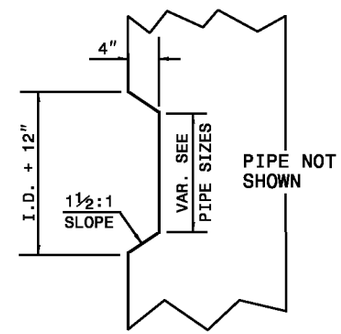

TAPER DETAIL

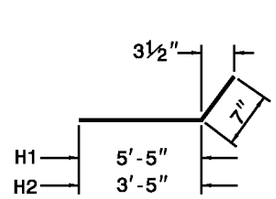

"H" BARS

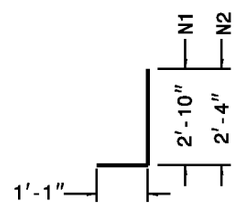

"N" BARS

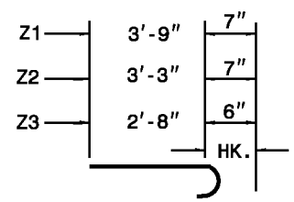

"Z" BARS

"H", "N", & "Z" BAR DIMENSIONS ARE OUT TO OUT.

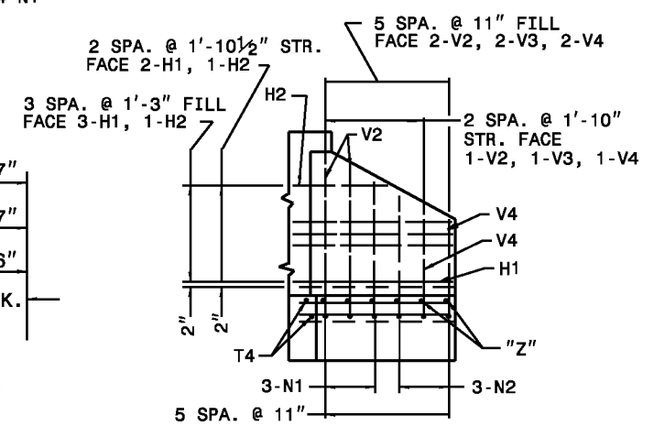

WING ELEVATION

STATE OF
NORTH CAROLINA
DEPT. OF TRANSPORTATION
DIVISION OF HIGHWAYS
RALEIGH, N.C.

1-12

ENGLISH STANDARD DRAWING FOR

REINFORCED CONCRETE ENDWALL

FOR DOUBLE & TRIPLE 60" PIPE - 90° SKEW

SHEET 2 OF 2

838.28

SHEET 2 OF 2

838.28

STATE OF
NORTH CAROLINA
DEPT. OF TRANSPORTATION
DIVISION OF HIGHWAYS
RALEIGH, N.C.

1-12

ENGLISH STANDARD DRAWING FOR

REINFORCED CONCRETE ENDWALL

FOR SINGLE 66" PIPE 90° SKEW

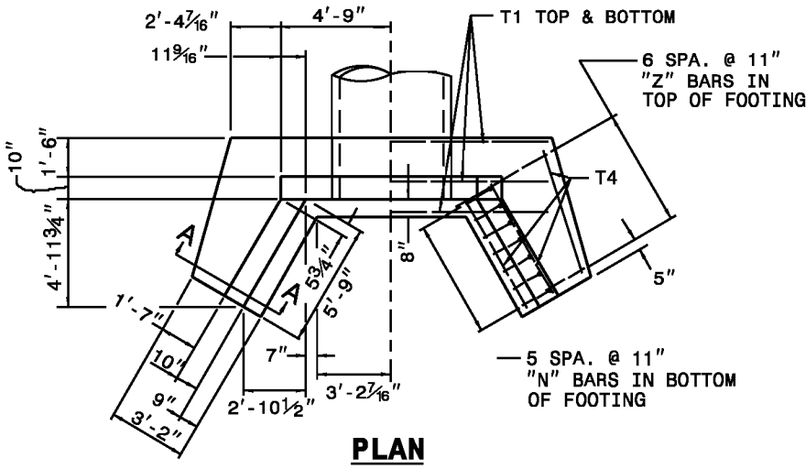

PLAN

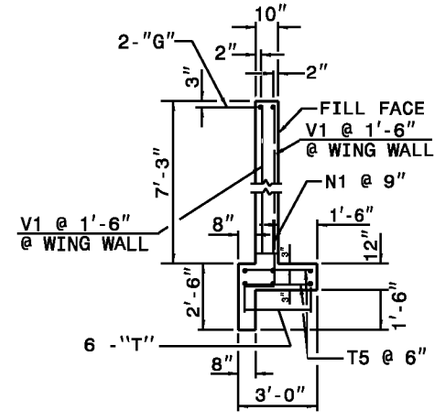

SECTION - BB

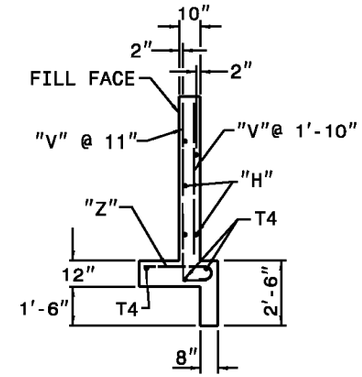

SECTION - AA

SEE STD. DWG. 838.45 FOR GENERAL NOTES.

BILL OF MATERIAL FOR ENDWALL				
REINF. STEEL			1 PIPE	
BAR	SIZE	LENGTH	NO.	WEIGHT
B1	#4	5'-6"	4	15
B2	#4	4'-6"	4	12
G1	#7	9'-2"	2	37
H1	#4	6'-4"	10	42
H2	#4	4'-7"	2	6
H3	#4	2'-7"	4	7
N1	#5	3'-11"	10	41
N2	#4	3'-5"	6	14
T1	#4	13'-8"	6	55
T4	#4	6'-0"	6	24
T5	#4	2'-6"	38	63
V1	#4	6'-9"	6	27
V2	#4	5'-2"	6	21
V3	#4	4'-1"	6	16
V4	#4	2'-11"	6	12
Z1	#6	4'-6"	6	41
Z2	#5	3'-11"	4	16
Z3	#4	3'-3"	4	9
REINF. STEEL LBS.				458
CON./R.C. CU. YDS			6.3	

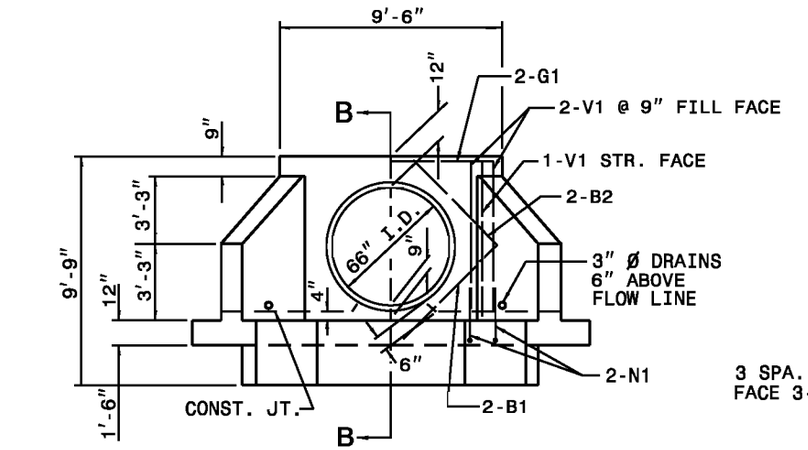

ELEVATION

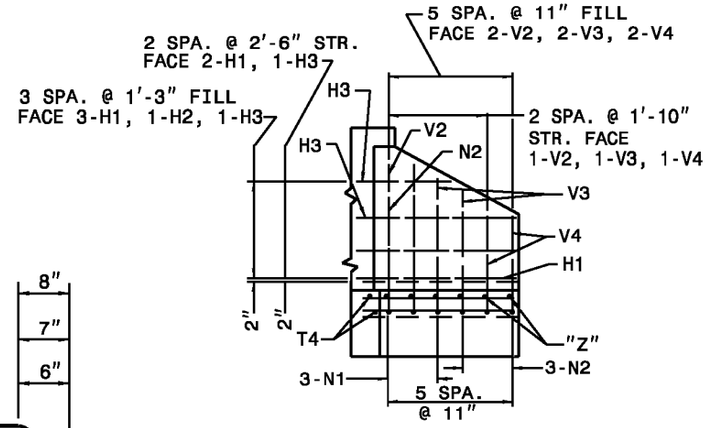

WING ELEVATION

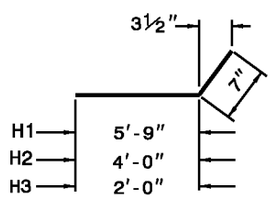

"H" BARS

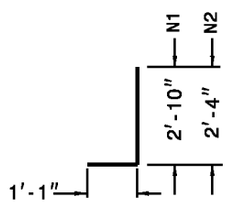

"N" BARS

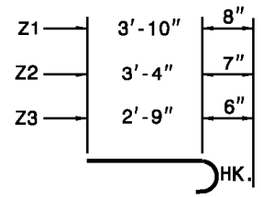

"Z" BARS

"H", "N", & "Z" BAR DIMENSIONS ARE OUT TO OUT.

SHEET 1 OF 2

838.33

STATE OF
NORTH CAROLINA
DEPT. OF TRANSPORTATION
DIVISION OF HIGHWAYS
RALEIGH, N.C.

1-12

ENGLISH STANDARD DRAWING FOR

REINFORCED CONCRETE ENDWALL

FOR SINGLE 66" PIPE 90° SKEW

SHEET 1 OF 2

838.33

STATE OF
NORTH CAROLINA
DEPT. OF TRANSPORTATION
DIVISION OF HIGHWAYS
RALEIGH, N.C.

1-12

ENGLISH STANDARD DRAWING FOR

REINFORCED CONCRETE ENDWALL

FOR SINGLE 66" PIPE 90° SKEW

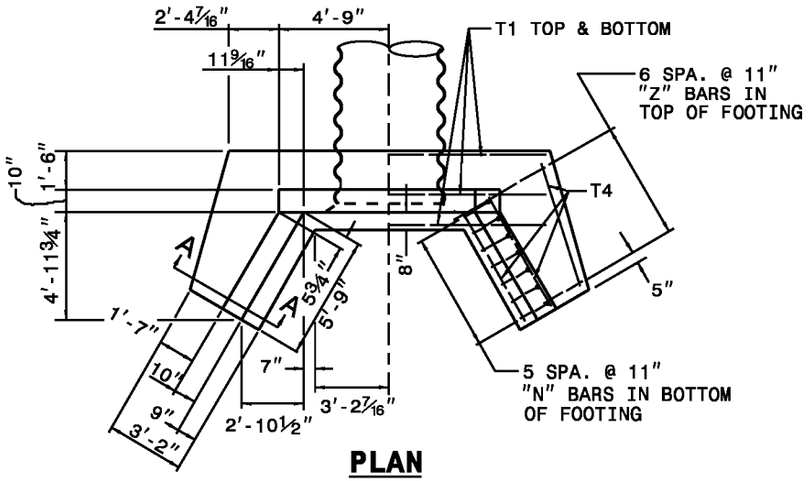

PLAN

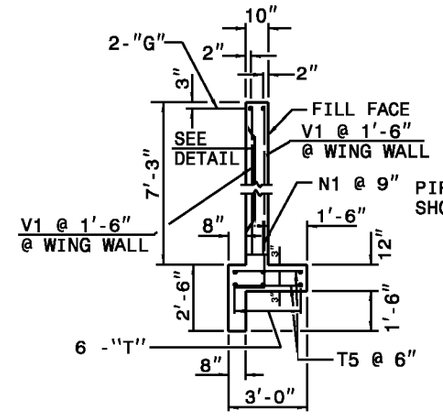

SECTION - BB

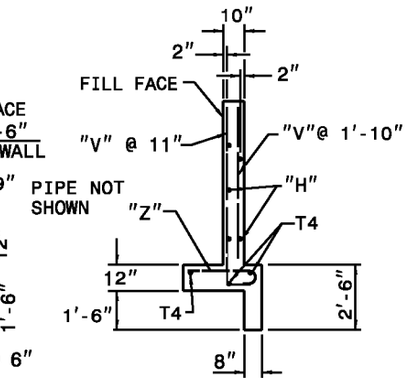

SECTION - AA

SEE STD.# 838.45 FOR GENERAL NOTES.

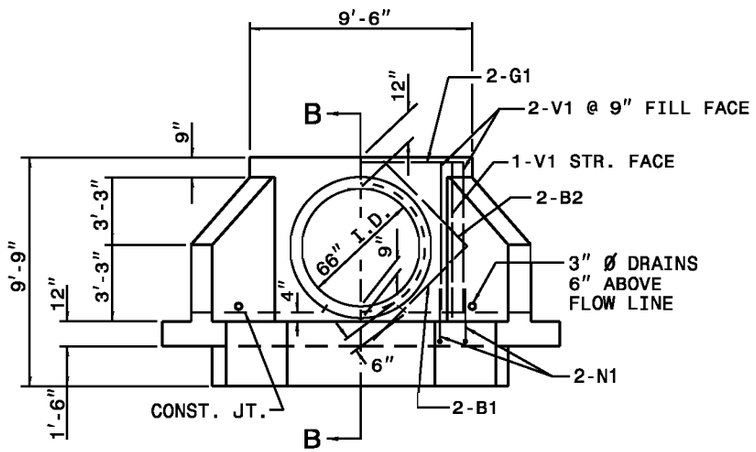

ELEVATION

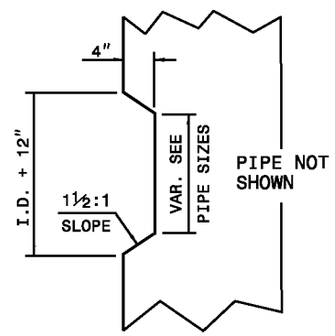

TAPER DETAIL

BILL OF MATERIAL FOR ENDWALL				
REINF. STEEL			1 PIPE	
BAR	SIZE	LENGTH	NO.	WEIGHT
B1	#4	5'-6"	4	15
B2	#4	4'-6"	4	12
G1	#7	9'-2"	2	37
H1	#4	6'-4"	10	42
H2	#4	4'-7"	2	6
H3	#4	2'-7"	4	7
N1	#5	3'-11"	10	41
N2	#4	3'-5"	6	14
T1	#4	13'-8"	6	55
T4	#4	6'-0"	6	24
T5	#4	2'-6"	38	63
V1	#4	6'-9"	6	27
V2	#4	5'-2"	6	21
V3	#4	4'-1"	6	16
V4	#4	2'-11"	6	12
Z1	#6	4'-6"	6	41
Z2	#5	3'-11"	4	16
Z3	#4	3'-3"	4	9
REINF. STEEL LBS.				458
CON./C.S. CU. YDS			6.6	

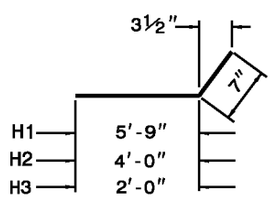

"H" BARS

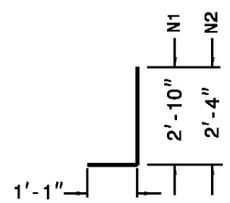

"N" BARS

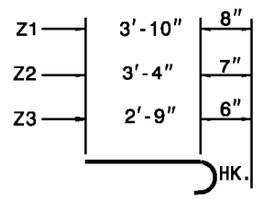

"Z" BARS

"H", "N", & "Z" BAR DIMENSIONS ARE OUT TO OUT.

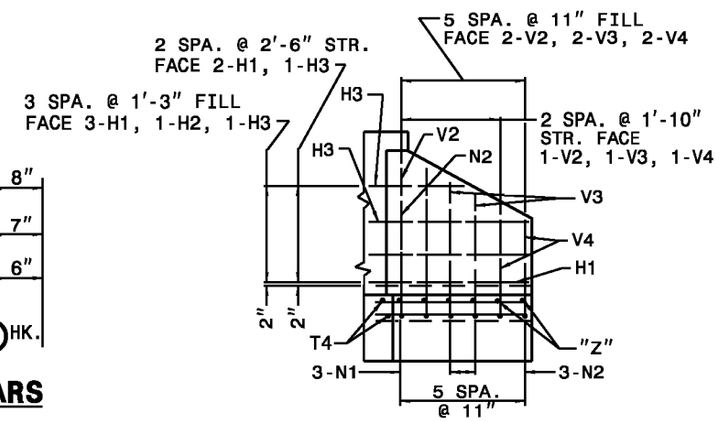

WING ELEVATION

SHEET 2 OF 2

838.33

STATE OF
NORTH CAROLINA
DEPT. OF TRANSPORTATION
DIVISION OF HIGHWAYS
RALEIGH, N.C.

1-12

ENGLISH STANDARD DRAWING FOR

REINFORCED CONCRETE ENDWALL

FOR SINGLE 66" PIPE 90° SKEW

SHEET 2 OF 2

838.33

STATE OF
NORTH CAROLINA
DEPT. OF TRANSPORTATION
DIVISION OF HIGHWAYS
RALEIGH, N.C.

1-12

ENGLISH STANDARD DRAWING FOR

REINFORCED CONCRETE ENDWALL

FOR DOUBLE & TRIPLE 66" PIPE - 90° SKEW

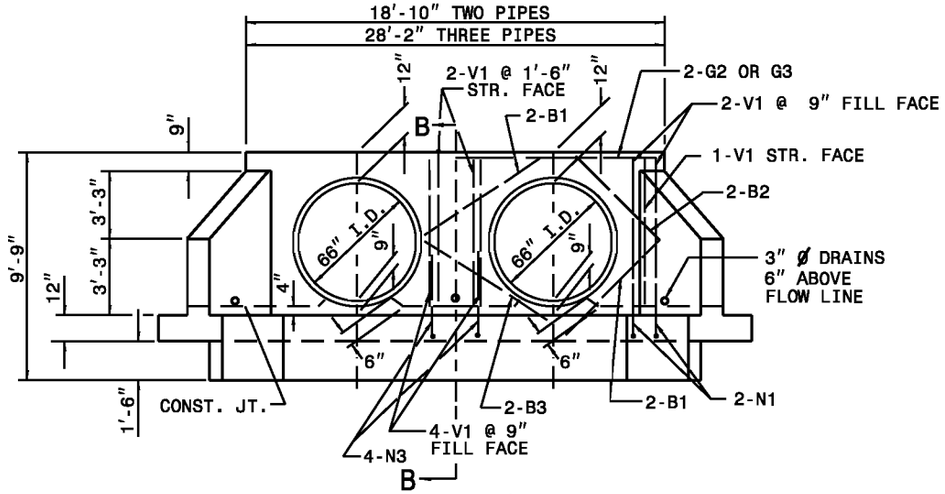

ELEVATION

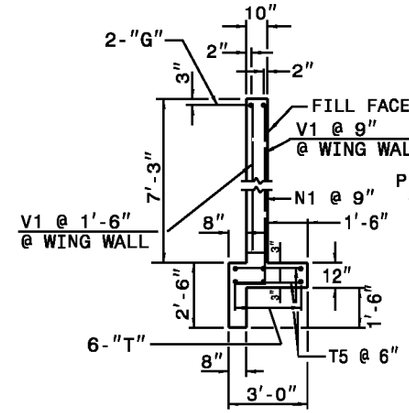

SECTION - BB

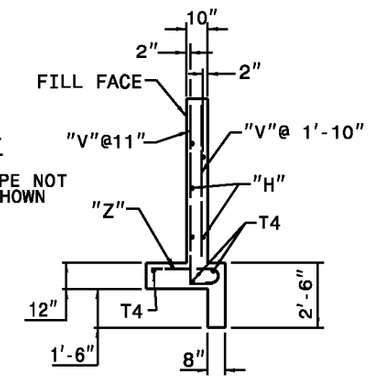

SECTION - AA

SEE STD. # 838.45 FOR GENERAL NOTES.

BILL OF MATERIAL FOR ENDWALL

REINF. STEEL			2 PIPES		3 PIPES	
BAR	SIZE	LENGTH	NO.	WEIGHT	NO.	WEIGHT
B1	#4	5'-6"	8	29	12	44
B2	#4	4'-6"	4	12	4	12
B3	#4	7'-0"	4	19	8	37
G2	#7	18'-6"	2	76	-	-
G3	#7	27'-10"	-	-	2	114
H1	#4	6'-4"	10	42	10	42
H2	#4	4'-7"	2	6	2	6
H3	#4	2'-7"	4	7	4	7
N1	#5	3'-11"	14	57	18	74
N2	#4	3'-5"	6	14	6	14
T2	#4	23'-0"	6	92		
T3	#4	16'-10"			12	135
T4	#4	6'-0"	6	24	6	24
T5	#4	2'-6"	76	127	112	187
V1	#4	6'-9"	12	54	18	81
V2	#4	5'-2"	6	21	6	21
V3	#4	4'-1"	6	16	6	16
V4	#4	2'-11"	6	12	6	12
Z1	#6	4'-6"	6	41	6	41
Z2	#6	3'-11"	4	16	4	16
Z3	#4	3'-3"	4	9	4	9
REINF. STEEL LBS.				674		892
CON./R.C. CU. YDS				8.7		11.1

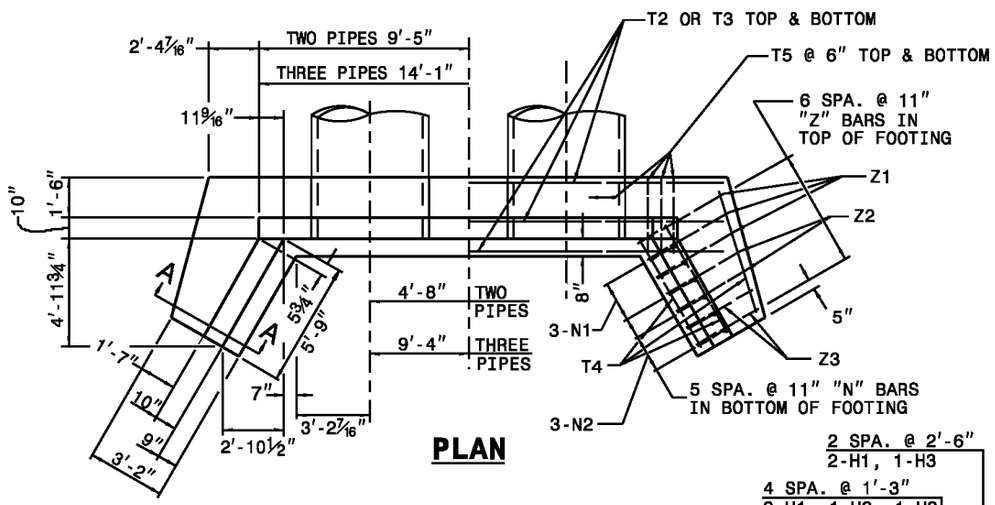

PLAN

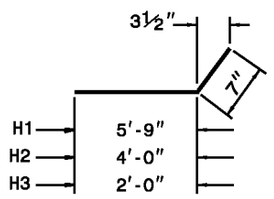

"H" BARS

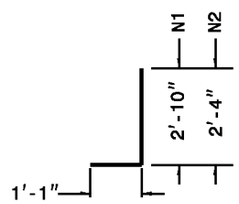

"N" BARS

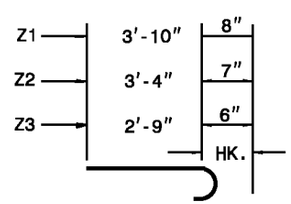

"Z" BARS

"H", "N", & "Z" BAR DIMENSIONS ARE OUT TO OUT.

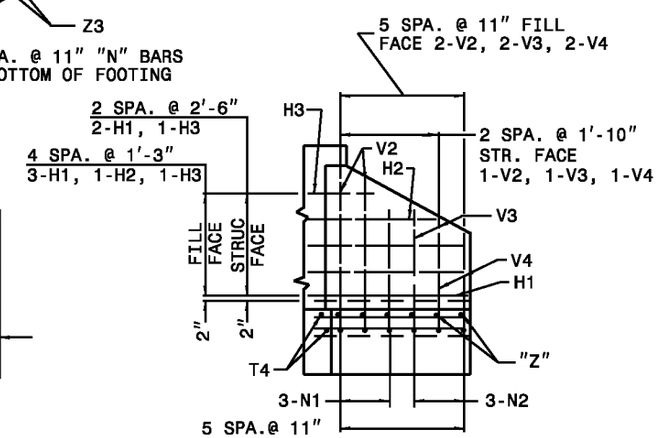

WING ELEVATION

STATE OF
NORTH CAROLINA
DEPT. OF TRANSPORTATION
DIVISION OF HIGHWAYS
RALEIGH, N.C.

1-12

ENGLISH STANDARD DRAWING FOR

REINFORCED CONCRETE ENDWALL

FOR DOUBLE & TRIPLE 66" PIPE - 90° SKEW

SHEET 1 OF 2

838.34

STATE OF
NORTH CAROLINA
DEPT. OF TRANSPORTATION
DIVISION OF HIGHWAYS
RALEIGH, N.C.

1-12

ENGLISH STANDARD DRAWING FOR

REINFORCED CONCRETE ENDWALL

FOR DOUBLE & TRIPLE 66" PIPE - 90° SKEW

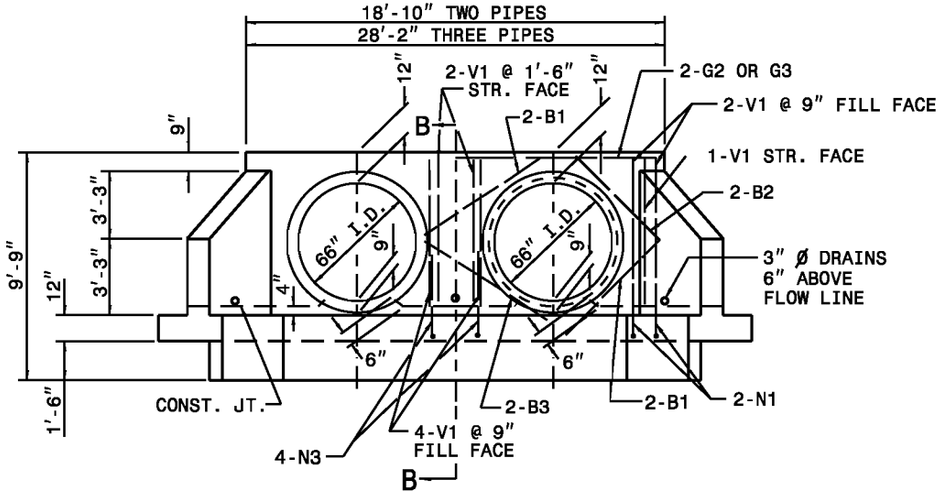

ELEVATION

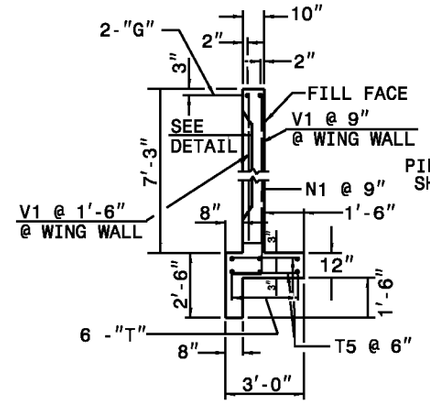

SECTION - BB

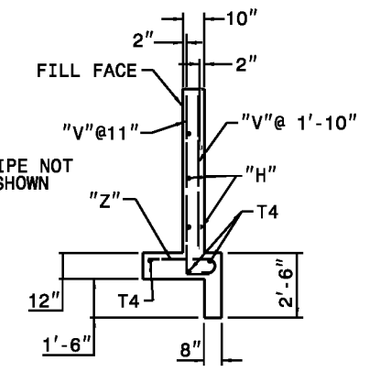

SECTION - AA

SEE STD. # 838.45 FOR GENERAL NOTES.

BILL OF MATERIAL FOR ENDWALL						
REINF. STEEL			2 PIPES		3 PIPES	
BAR	SIZE	LENGTH	NO.	WEIGHT	NO.	WEIGHT
B1	#4	5'-6"	8	29	12	44
B2	#4	4'-6"	4	12	4	12
B3	#4	7'-0"	4	19	8	37
G2	#7	18'-6"	2	76	-	-
G3	#7	27'-10"	-	-	2	114
H1	#4	6'-4"	10	42	10	42
H2	#4	4'-7"	2	6	2	6
H3	#4	2'-7"	4	7	4	7
N1	#5	3'-11"	14	57	18	74
N2	#4	3'-5"	6	14	6	14
T2	#4	23'-0"	6	92		
T3	#4	16'-10"			12	135
T4	#4	6'-0"	6	24	6	24
T5	#4	2'-6"	76	127	112	187
V1	#4	6'-9"	12	54	18	81
V2	#4	5'-2"	6	21	6	21
V3	#4	4'-1"	6	16	6	16
V4	#4	2'-11"	6	12	6	12
Z1	#6	4'-6"	6	41	6	41
Z2	#6	3'-11"	4	16	4	16
Z3	#4	3'-3"	4	9	4	9
REINF. STEEL LBS.				674		892
CON./C.S. CU. YDS				9.3		12.0

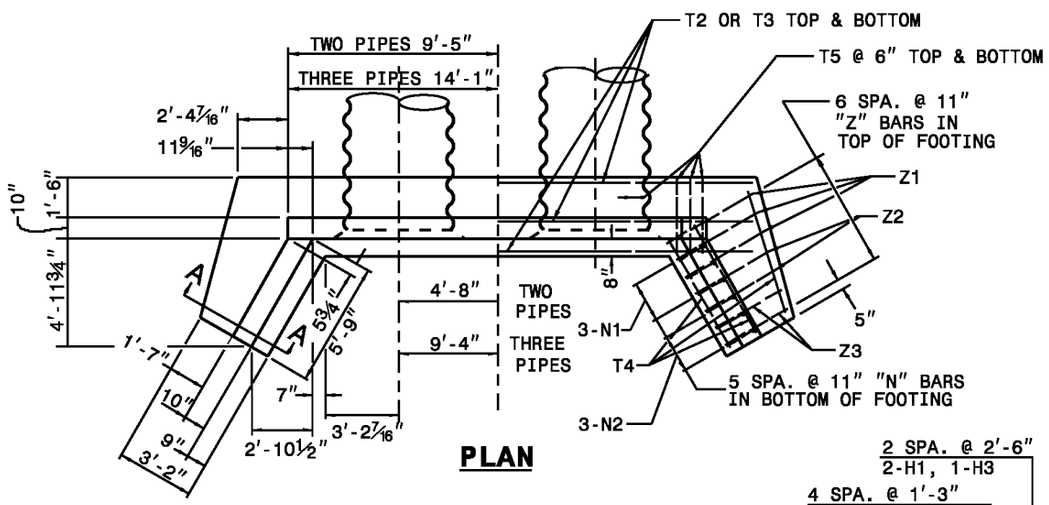

PLAN

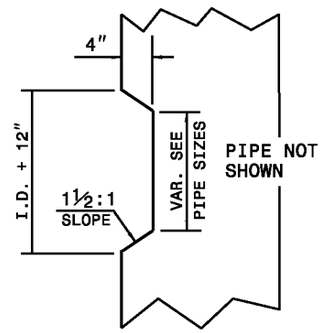

TAPER DETAIL

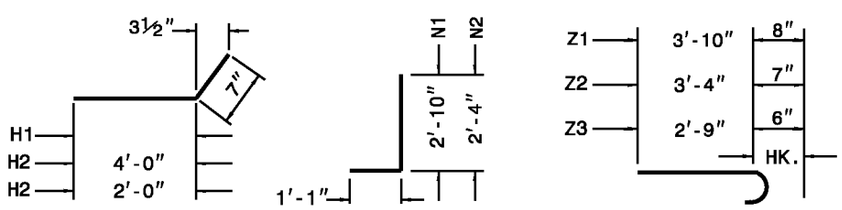

"H" BARS

"N" BARS

"Z" BARS

"H", "N", & "Z" BAR DIMENSIONS ARE OUT TO OUT.

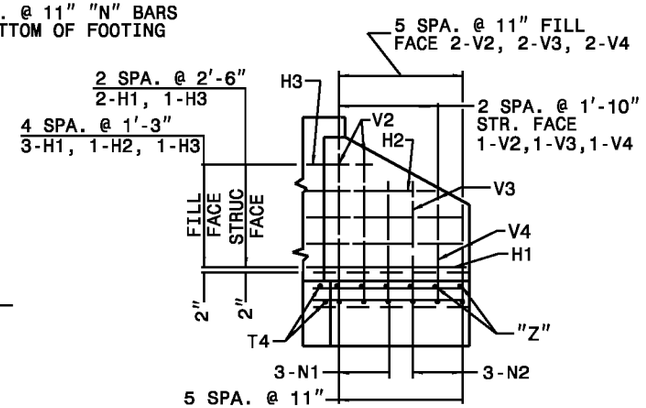

WING ELEVATION

STATE OF
NORTH CAROLINA
DEPT. OF TRANSPORTATION
DIVISION OF HIGHWAYS
RALEIGH, N.C.

1-12

ENGLISH STANDARD DRAWING FOR

REINFORCED CONCRETE ENDWALL

FOR DOUBLE & TRIPLE 66" PIPE - 90° SKEW

SHEET 2 OF 2

838.34

SHEET 2 OF 2

838.34

STATE OF
NORTH CAROLINA
DEPT. OF TRANSPORTATION
DIVISION OF HIGHWAYS
RALEIGH, N.C.

1-12

ENGLISH STANDARD DRAWING FOR

REINFORCED CONCRETE ENDWALL

FOR SINGLE 72" PIPE 90° SKEW

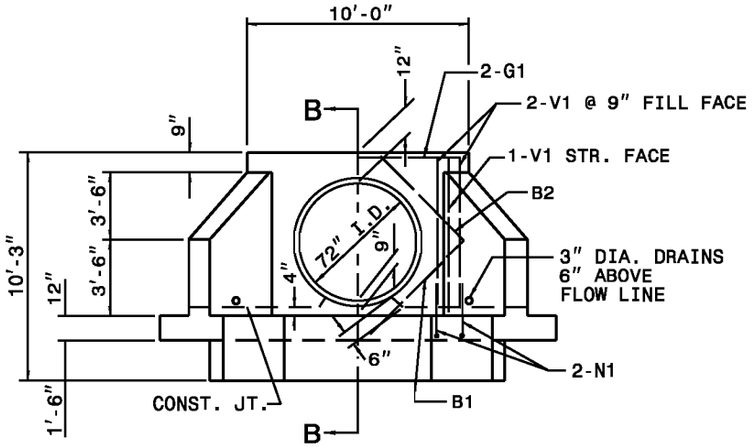

ELEVATION

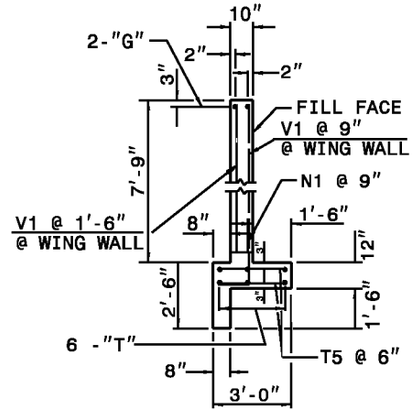

SECTION - BB

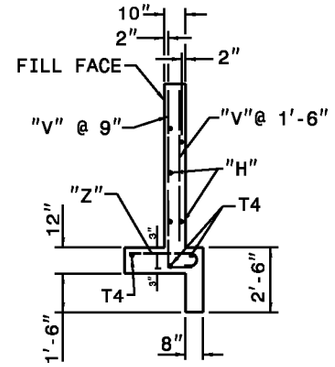

SECTION - AA

SEE STD.# 838.45 FOR GENERAL NOTES.

BILL OF MATERIAL FOR ENDWALL				
REINF. STEEL			1 PIPE	
BAR	SIZE	LENGTH	NO.	WEIGHT
B1	#4	5'-6"	4	15
B2	#4	4'-6"	4	12
G1	#7	9'-8"	2	40
H1	#4	7'-2"	10	48
H2	#4	5'-6"	2	7
H3	#4	3'-5"	4	9
N1	#5	3'-11"	14	57
N2	#4	3'-5"	8	18
T1	#4	14'-6"	6	58
T4	#4	6'-9"	6	27
T5	#4	2'-6"	40	67
V1	#4	7'-3"	6	29
V2	#4	5'-10"	10	39
V3	#4	5'-0"	6	20
V4	#4	4'-1"	6	16
V5	#4	3'-2"	6	13
Z1	#6	4'-8"	6	42
Z2	#5	4'-0"	6	25
Z3	#4	3'-4"	6	13
REINF. STEEL LBS.				555
CON./R.C. CU. YDS			7.1	

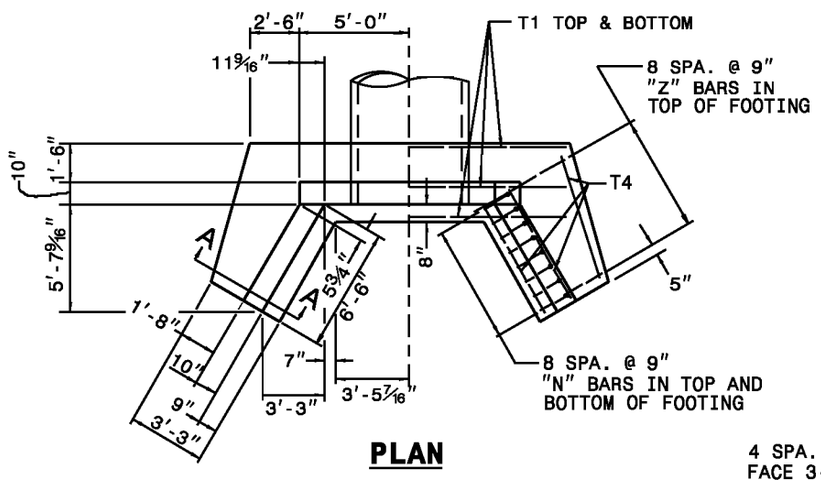

PLAN

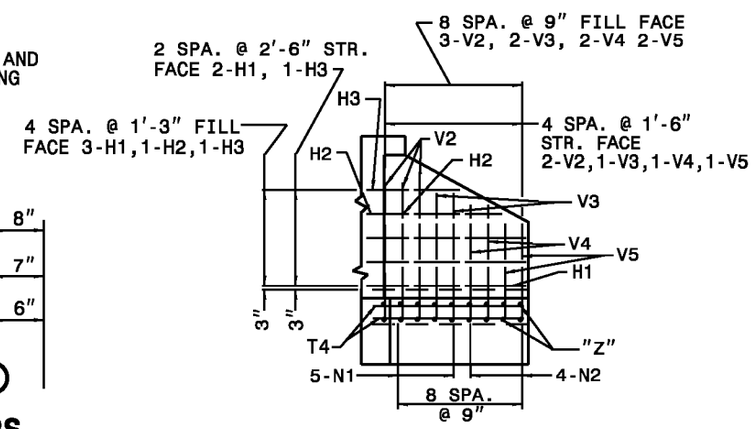

WING ELEVATION

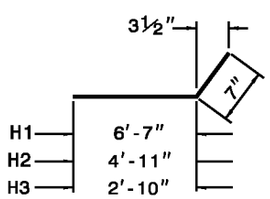

"H" BARS

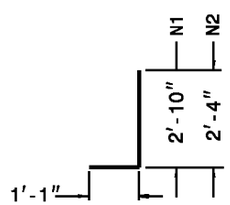

"N" BARS

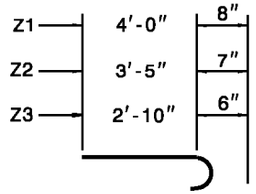

"Z" BARS

"H", "N", & "Z" BAR DIMENSIONS ARE OUT TO OUT.

SHEET 1 OF 2

838.39

STATE OF
NORTH CAROLINA
DEPT. OF TRANSPORTATION
DIVISION OF HIGHWAYS
RALEIGH, N.C.

1-12

ENGLISH STANDARD DRAWING FOR

REINFORCED CONCRETE ENDWALL

FOR SINGLE 72" PIPE 90° SKEW

SHEET 1 OF 2

838.39

STATE OF
NORTH CAROLINA
DEPT. OF TRANSPORTATION
DIVISION OF HIGHWAYS
RALEIGH, N.C.

1-12

ENGLISH STANDARD DRAWING FOR

REINFORCED CONCRETE ENDWALL

FOR SINGLE 72" PIPE 90° SKEW

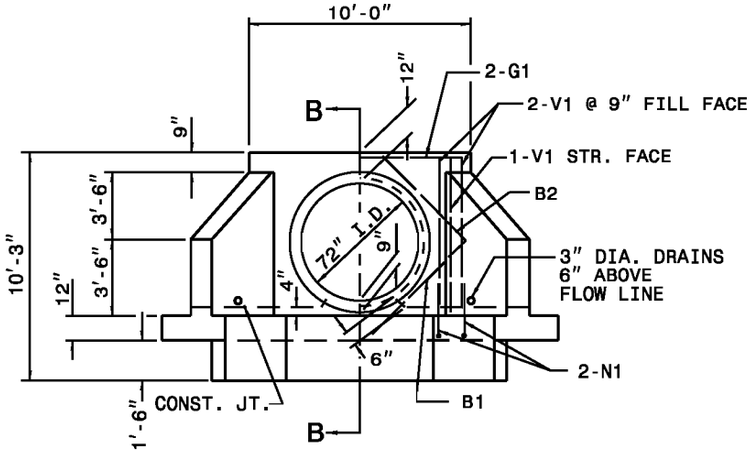

ELEVATION

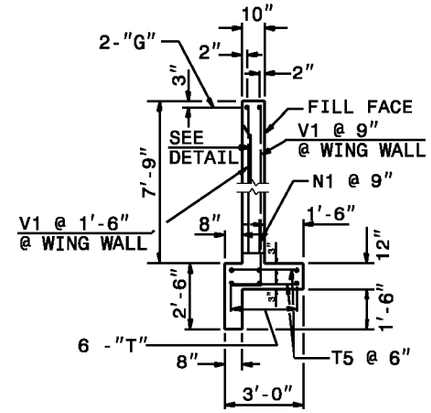

SECTION - BB

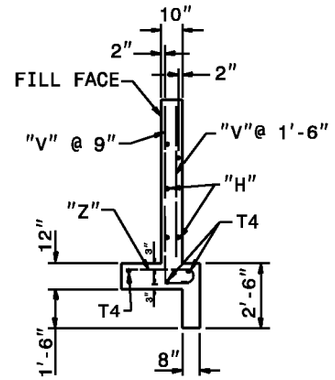

SECTION - AA

SEE STD.# 838.45 FOR GENERAL NOTES.

BILL OF MATERIAL FOR ENDWALL				
REINF. STEEL			1 PIPE	
BAR	SIZE	LENGTH	NO.	WEIGHT
B1	#4	5'-6"	4	15
B2	#4	4'-6"	4	12
G1	#7	9'-8"	2	40
H1	#4	7'-2"	10	48
H2	#4	5'-6"	2	7
H3	#4	3'-5"	4	9
N1	#5	3'-11"	14	57
N2	#4	3'-5"	8	18
T1	#4	14'-6"	6	58
T4	#4	6'-9"	6	27
T5	#4	2'-6"	40	67
V1	#4	7'-3"	6	29
V2	#4	5'-10"	10	39
V3	#4	5'-0"	6	20
V4	#4	4'-1"	6	16
V5	#4	3'-2"	6	13
Z1	#6	4'-8"	6	42
Z2	#5	4'-0"	6	25
Z3	#4	3'-4"	6	13
REINF. STEEL LBS.				555
CON./C.S. CU. YDS			7.5	

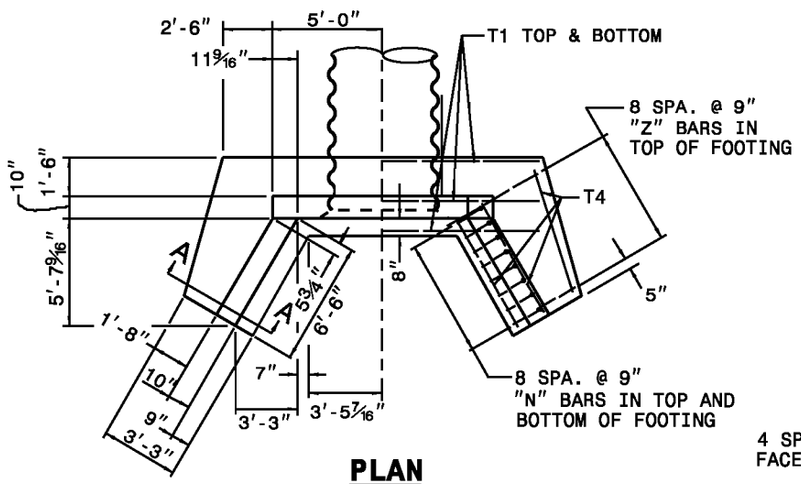

PLAN

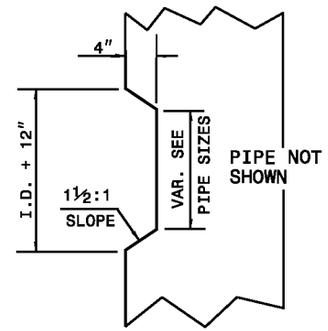

TAPER DETAIL

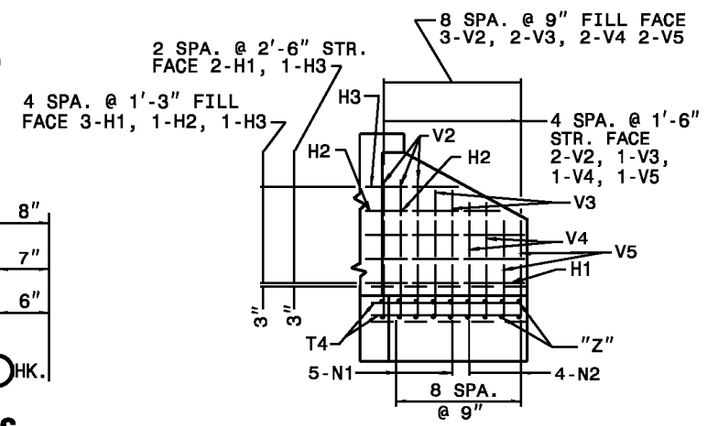

WING ELEVATION

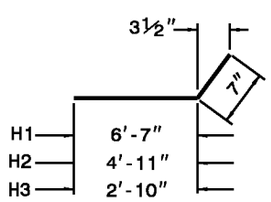

"H" BARS

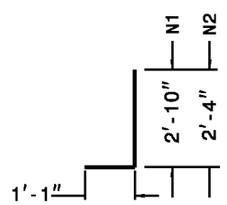

"N" BARS

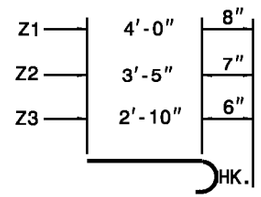

"Z" BARS

"H", "N", & "Z" BAR DIMENSIONS ARE OUT TO OUT.

SHEET 2 OF 2

838.39

STATE OF
NORTH CAROLINA
DEPT. OF TRANSPORTATION
DIVISION OF HIGHWAYS
RALEIGH, N.C.

1-12

ENGLISH STANDARD DRAWING FOR

REINFORCED CONCRETE ENDWALL

FOR SINGLE 72" PIPE 90° SKEW

SHEET 2 OF 2

838.39

STATE OF
NORTH CAROLINA
DEPT. OF TRANSPORTATION
DIVISION OF HIGHWAYS
RALEIGH, N.C.

1-12

ENGLISH STANDARD DRAWING FOR

REINFORCED CONCRETE ENDWALL

FOR DOUBLE AND TRIPLE 72" PIPE 90° SKEW

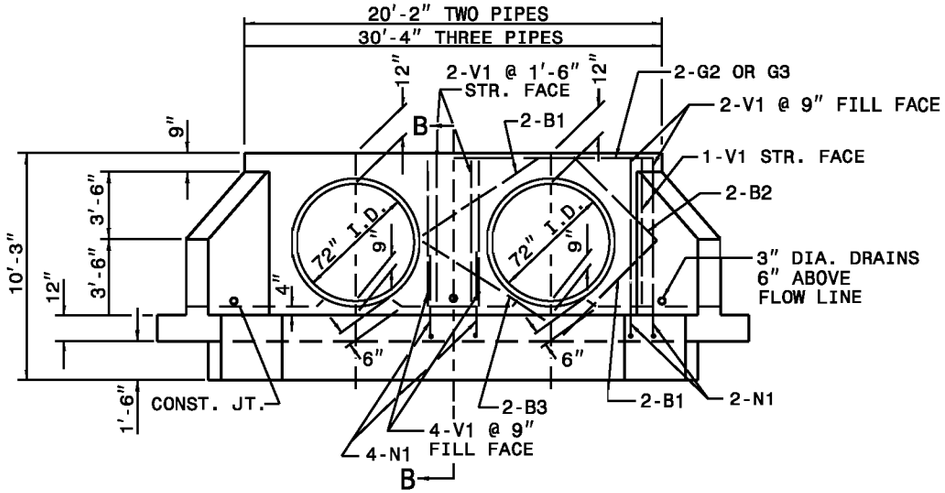

ELEVATION

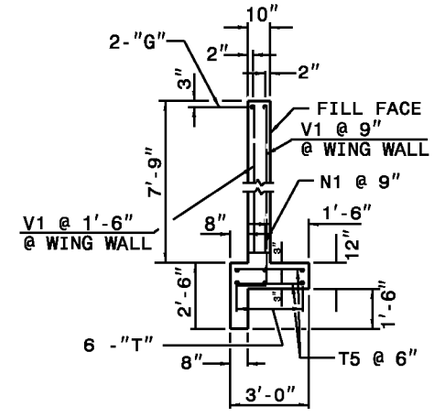

SECTION - BB

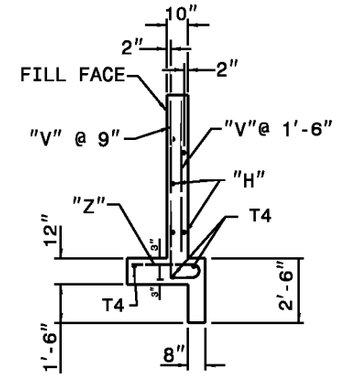

SECTION - AA

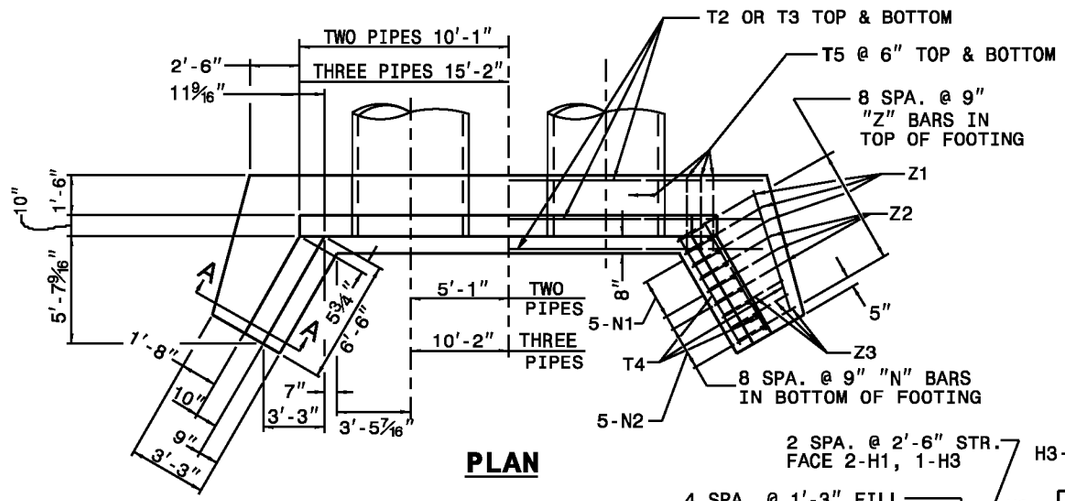

PLAN

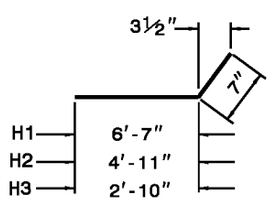

"H" BARS

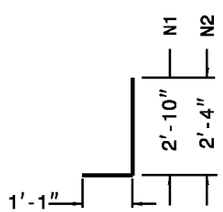

"N" BARS

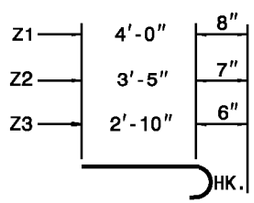

"Z" BARS

"H", "N", & "Z" BAR DIMENSIONS ARE OUT TO OUT.

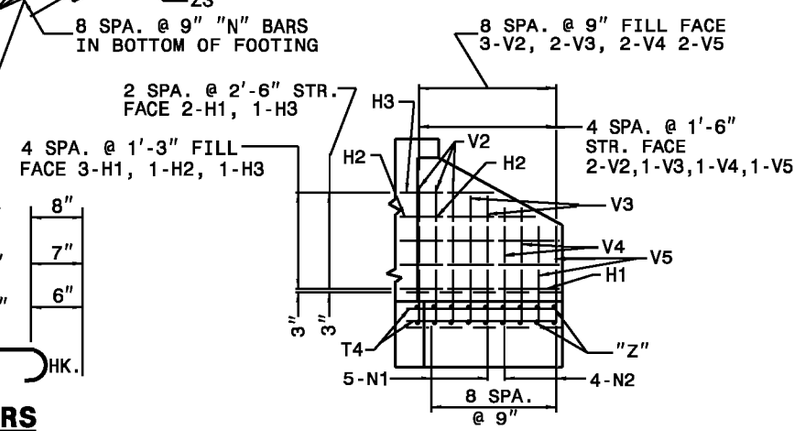

WING ELEVATION

SEE STD. # 838.45 FOR GENERAL NOTES.

BILL OF MATERIAL FOR ENDWALL

REINF. STEEL			2 PIPES		3 PIPES	
BAR	SIZE	LENGTH	NO.	WEIGHT	NO.	WEIGHT
B1	#4	5'-6"	8	29	12	44
B2	#4	4'-6"	4	12	4	12
B3	#4	7'-0"	4	19	8	37
G2	#7	19'-10"	2	81	-	-
G3	#7	30'-0"	-	-	2	123
H1	#4	7'-2"	10	48	10	48
H2	#4	5'-6"	2	7	2	7
H3	#4	3'-5"	4	9	4	9
N1	#5	3'-11"	18	74	22	90
N2	#4	3'-5"	8	18	8	18
T2	#4	24'-8"	6	99		
T3	#4	18'-1"			12	145
T4	#4	6'-9"	6	22	6	27
T5	#4	2'-6"	80	134	122	204
V1	#4	7'-3"	12	58	18	87
V2	#4	5'-10"	10	39	10	39
V3	#4	5'-0"	6	20	6	20
V4	#4	4'-1"	6	16	6	16
V5	#4	3'-2"	6	13	6	13
Z1	#6	4'-8"	6	42	6	42
Z2	#5	4'-0"	6	25	6	25
Z3	#4	3'-4"	6	13	6	13
REINF. STEEL LBS.				783		1019
CON./R.C. CU. YDS			9.8		12.5	

STATE OF
NORTH CAROLINA
DEPT. OF TRANSPORTATION
DIVISION OF HIGHWAYS
RALEIGH, N.C.

1-12

ENGLISH STANDARD DRAWING FOR

REINFORCED CONCRETE ENDWALL

FOR DOUBLE AND TRIPLE 72" PIPE 90° SKEW

STATE OF NORTH CAROLINA
DEPT. OF TRANSPORTATION
DIVISION OF HIGHWAYS
RALEIGH, N.C.

1-12

ENGLISH STANDARD DRAWING FOR

REINFORCED CONCRETE ENDWALL

FOR DOUBLE AND TRIPLE 72" PIPE 90° SKEW

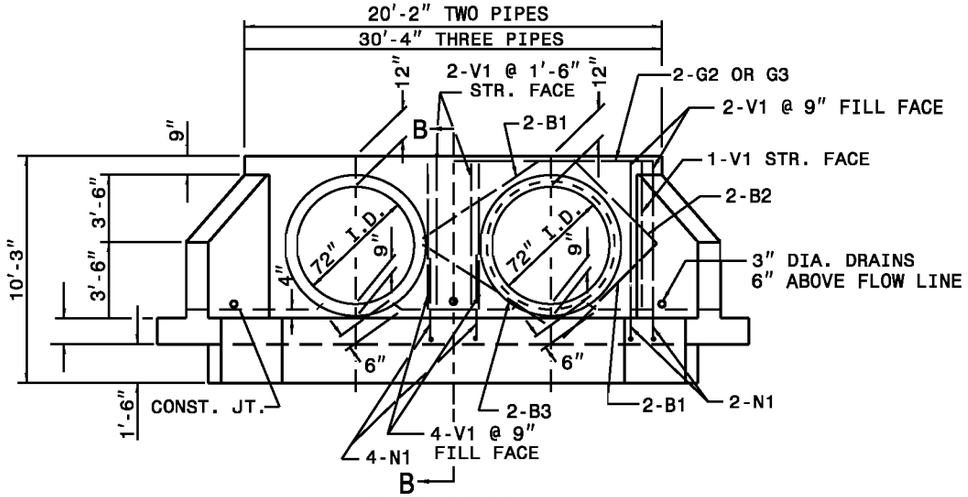

ELEVATION

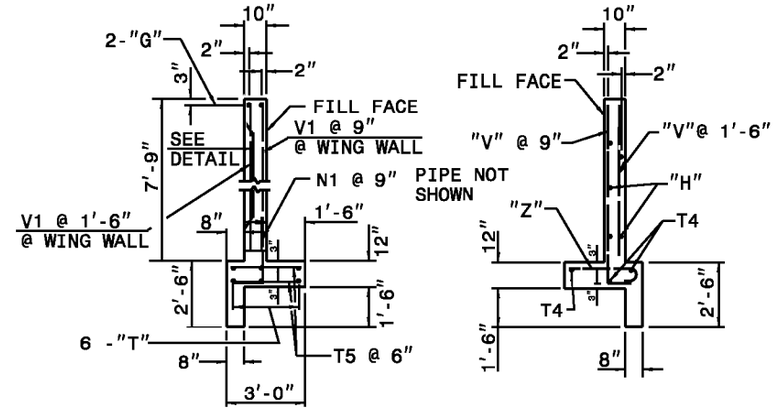

SECTION - BB

SECTION - AA

SEE STD. # 838.45 FOR GENERAL NOTES.

BILL OF MATERIAL FOR ENDWALL						
REINF. STEEL			2 PIPES		3 PIPES	
BAR	SIZE	LENGTH	NO.	WEIGHT	NO.	WEIGHT
B1	#4	5'-6"	8	29	12	44
B2	#4	4'-6"	4	12	4	12
B3	#4	7'-0"	4	19	8	37
G2	#7	19'-10"	2	81	-	-
G3	#7	30'-0"	-	-	2	123
H1	#4	7'-2"	10	48	10	48
H2	#4	5'-6"	2	7	2	7
H3	#4	3'-5"	4	9	4	9
N1	#5	3'-11"	18	74	22	90
N2	#4	3'-5"	8	18	8	18
T2	#4	24'-8"	6	99		
T3	#4	18'-1"			12	145
T4	#4	6'-9"	6	22	6	27
T5	#4	2'-6"	80	134	122	204
V1	#4	7'-3"	12	58	18	87
V2	#4	5'-10"	10	39	10	39
V3	#4	5'-0"	6	20	6	20
V4	#4	4'-1"	6	16	6	16
V5	#4	3'-2"	6	13	6	13
Z1	#6	4'-8"	6	42	6	42
Z2	#5	4'-0"	6	25	6	25
Z3	#4	3'-4"	6	13	6	13
REINF. STEEL LBS.				783		1019
CON./C.S. CU. YDS			10.5		13.6	

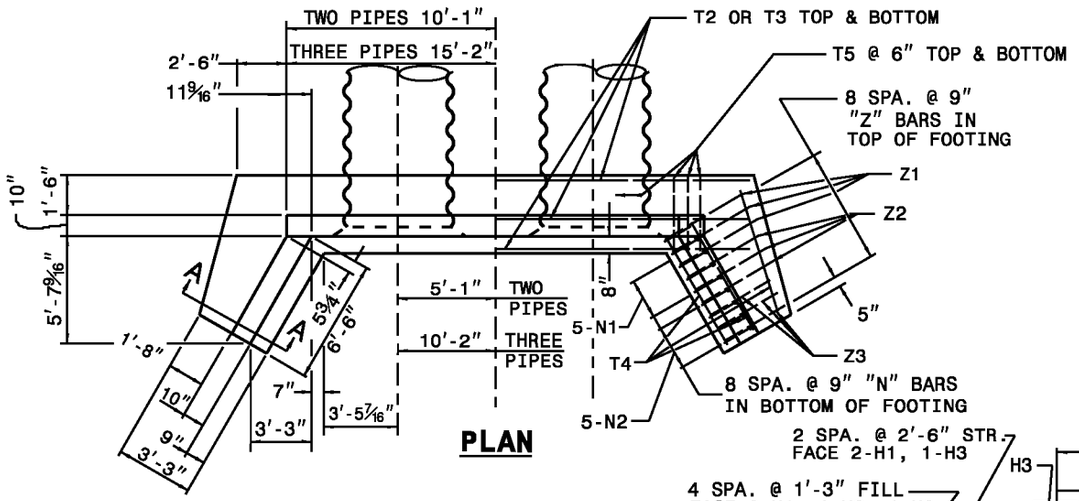

PLAN

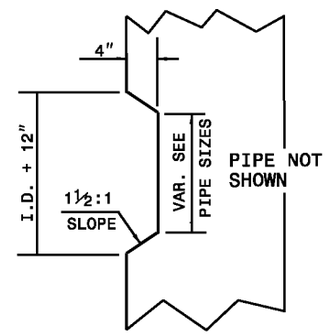

TAPER DETAIL

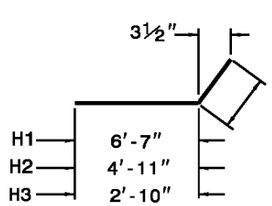

"H" BARS

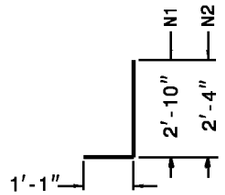

"N" BARS

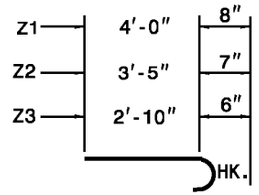

"Z" BARS

"H", "N", & "Z" BAR DIMENSIONS ARE OUT TO OUT.

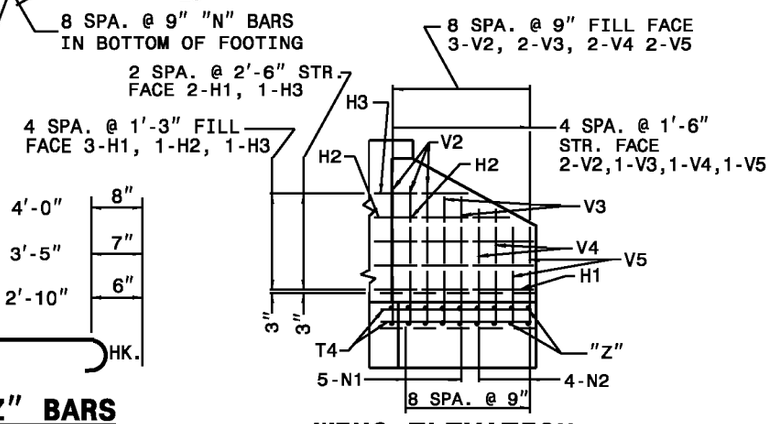

WING ELEVATION

SHEET 2 OF 2

838.40

STATE OF NORTH CAROLINA
DEPT. OF TRANSPORTATION
DIVISION OF HIGHWAYS
RALEIGH, N.C.

1-12

ENGLISH STANDARD DRAWING FOR

REINFORCED CONCRETE ENDWALL

FOR DOUBLE AND TRIPLE 72" PIPE 90° SKEW

SHEET 2 OF 2

838.40

STATE OF
NORTH CAROLINA
DEPT. OF TRANSPORTATION
DIVISION OF HIGHWAYS
RALEIGH, N.C.

1-12

ENGLISH STANDARD DRAWING FOR

NOTES FOR REINFORCED CONCRETE ENDWALL

STANDARD DRAWINGS 838.21 THRU 838.40

SHEET 1 OF 1

838.45

GENERAL NOTES:

USE CLASS "A" CONCRETE.

CHAMFER ALL EXPOSED CORNERS 1".

ALL DIMENSIONS RELATIVE TO PLACEMENT OF REINFORCING STEEL ARE TO CENTERS OF BARS.

PLACE A STONE DRAIN CONSISTING OF ONE (1) CUBIC FOOT OF NUMBER 78M STONE CONTAINED IN A POROUS FABRIC AT EACH WEEP HOLE. PLACE SUBDRAIN FINE AGGREGATE BENEATH, AROUND AND OVER THE STONE DRAIN SO THE STONE DRAIN IS COMPLETELY COVERED BY A LAYER OF SUBDRAIN FINE AGGREGATE AT LEAST ONE (1) FOOT THICK. WHERE THERE IS MORE THAN ONE WEEP HOLE IN A WING WALL, PLACE A HORIZONTAL DRAIN OF SUBDRAIN FINE AGGREGATE AT LEAST ONE (1) FOOT SQUARE IN CROSS SECTION TO CONNECT ALL STONE DRAINS. PLACE A VERTICAL DRAIN OF SUBDRAIN FINE AGGREGATE AT LEAST ONE (1) FOOT SQUARE IN CROSS SECTION AT EACH WEEP HOLE TO AN ELEVATION OF TWO (2) FEET BELOW THE SURFACE OF THE EMBANKMENT.

STATE OF
NORTH CAROLINA
DEPT. OF TRANSPORTATION
DIVISION OF HIGHWAYS
RALEIGH, N.C.

1-12

ENGLISH STANDARD DRAWING FOR

NOTES FOR REINFORCED CONCRETE ENDWALL

STANDARD DRAWINGS 838.21 THRU 838.40

SHEET 1 OF 1

838.45

STATE OF
NORTH CAROLINA
DEPT. OF TRANSPORTATION
DIVISION OF HIGHWAYS
RALEIGH, N.C.

1-12

ENGLISH STANDARD DRAWING FOR
REINFORCED BRICK ENDWALL
FOR SINGLE 54" PIPE - 90° SKEW

SHEET 1 OF 1

838.51

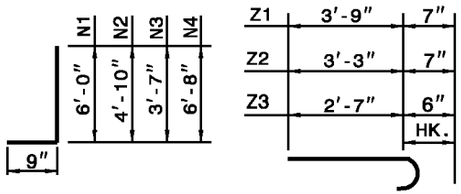

"N" BARS **"Z" BARS**

"N" & "Z" BAR DIMENSIONS ARE OUT TO OUT.

*PAY FOR CONCRETE AS BRICK MASONRY

BILL OF MATERIAL FOR ENDWALL				
REINF. STEEL			1 PIPE	
BAR	SIZE	LENGTH	NO.	WEIGHT
B1	#5	5'-3"	2	11
B2	#5	3'-9"	2	8
G1	#5	7'-8"	2	31
H1	#4	5'-3"	6	21
H2	#4	3'-6"	2	5
N1	#5	6'-9"	2	14
N2	#5	5'-7"	4	23
N3	#4	4'-4"	4	12
N4	#4	7'-5"	6	30
T1	#4	12'-0"	6	48
T4	#4	4'-11"	6	20
T5	#4	2'-6"	34	57
Z1	#5	4'-4"	4	18
Z2	#5	3'-10"	4	16
Z3	#5	3'-1"	4	8
REINF. STEEL LBS.				322
*CL. "A" CONC. FOOT. C.Y.			2.8	
BR. MASONRY/C.S. C.Y.			2.5	
BR. MASONRY/R.C. C.Y.			2.3	

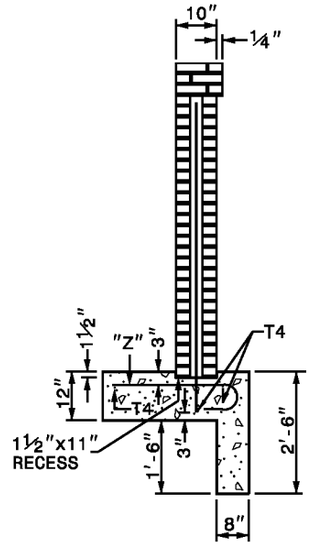

SECTION A-A

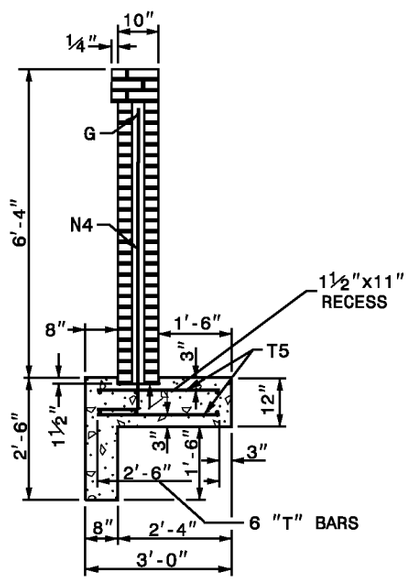

SECTION B-B

SEE STD. DWG. NO. 838.75 FOR GENERAL NOTES.

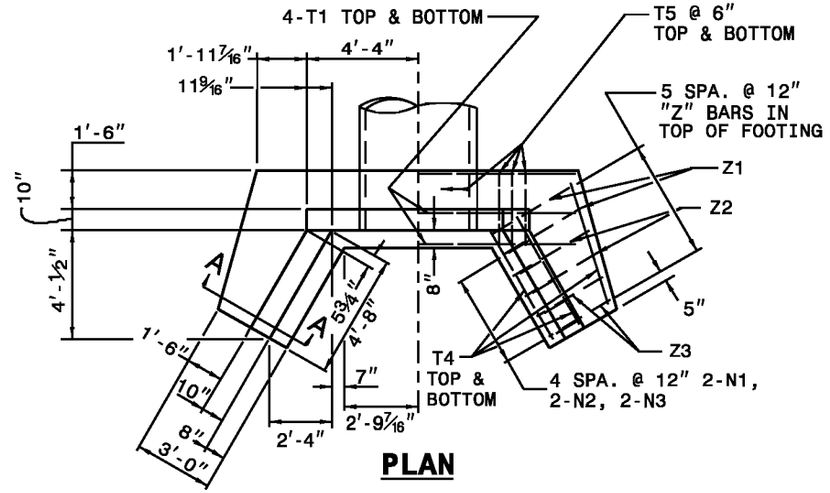

PLAN

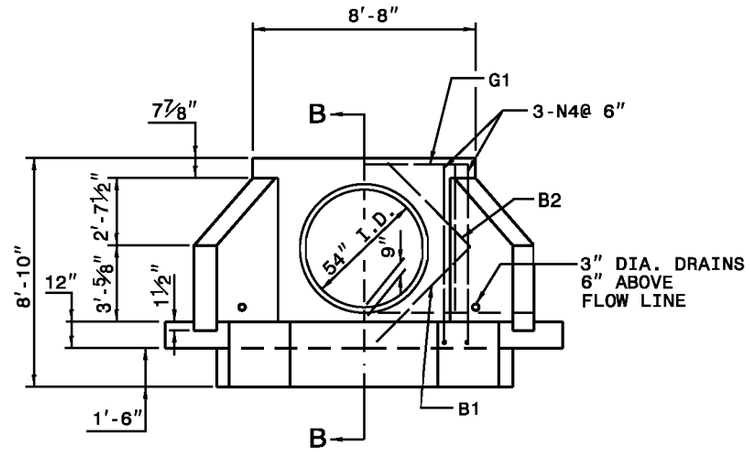

ELEVATION

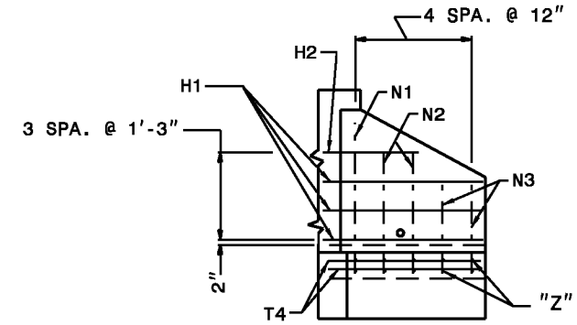

WING ELEVATION

STATE OF
NORTH CAROLINA
DEPT. OF TRANSPORTATION
DIVISION OF HIGHWAYS
RALEIGH, N.C.

1-12

ENGLISH STANDARD DRAWING FOR
REINFORCED BRICK ENDWALL
FOR SINGLE 54" PIPE - 90° SKEW

SHEET 1 OF 1

838.51

STATE OF
NORTH CAROLINA
DEPT. OF TRANSPORTATION
DIVISION OF HIGHWAYS
RALEIGH, N.C.

1-12

ENGLISH STANDARD DRAWING FOR

REINFORCED BRICK ENDWALL

FOR DOUBLE AND TRIPLE 54" PIPES - 90° SKEW

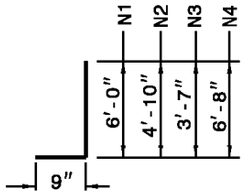

"N" BARS

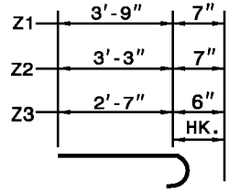

"Z" BARS

"N" & "Z" BAR DIMENSIONS ARE OUT TO OUT.

*PAY FOR CONCRETE AS BRICK MASONRY

BILL OF MATERIAL FOR ENDWALL						
REINF. STEEL			2 PIPES		3 PIPES	
BAR	SIZE	LENGTH	NO.	WEIGHT	NO.	WEIGHT
B1	#5	5'-3"	4	22	6	33
B2	#5	3'-9"	2	8	2	8
B3	#5	6'-0"	2	13	4	25
G2	#7	15'-4"	2	63	-	-
G3	#7	23'-0"	-	-	2	94
H1	#4	5'-3"	6	21	6	21
H2	#4	3'-6"	2	5	2	5
N1	#5	6'-9"	2	14	2	14
N2	#5	5'-7"	4	23	4	23
N3	#4	4'-4"	4	12	4	12
N4	#4	7'-5"	11	54	16	79
T2	#4	19'-8"	6	79	-	-
T3	#4	27'-4"	-	-	6	110
T4	#4	4'-11"	6	20	6	20
T5	#4	2'-6"	66	110	96	160
Z1	#5	4'-4"	4	18	4	18
Z2	#5	3'-10"	4	16	4	16
Z3	#4	3'-1"	4	8	4	8
REINF. STEEL LBS.				486		646
*CL. "A" CONC. FOOT. C.Y.				4.0		5.1
BR. MASONRY/C.S. C.Y.				3.5		4.5
BR. MASONRY/R.C. C.Y.				3.1		3.9

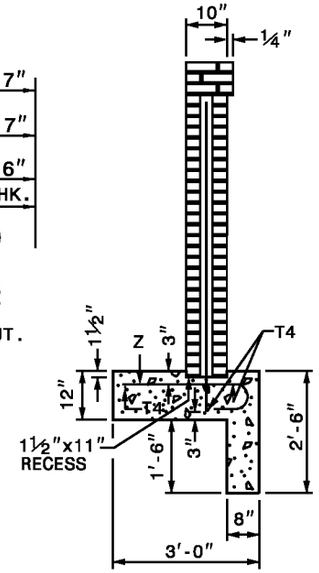

SECTION A-A

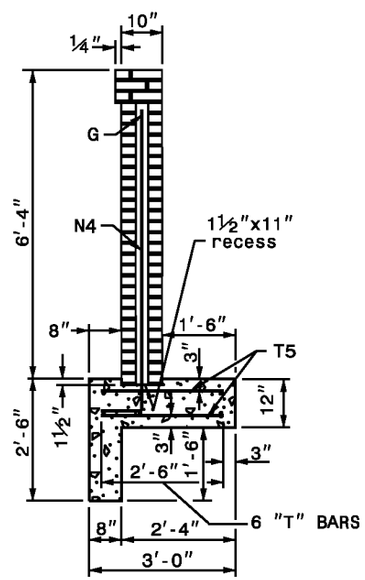

SECTION B-B

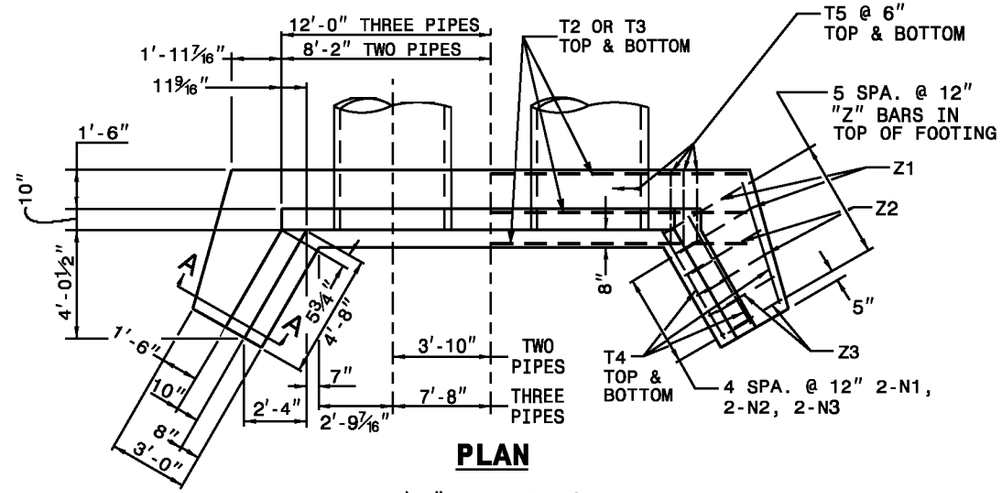

PLAN

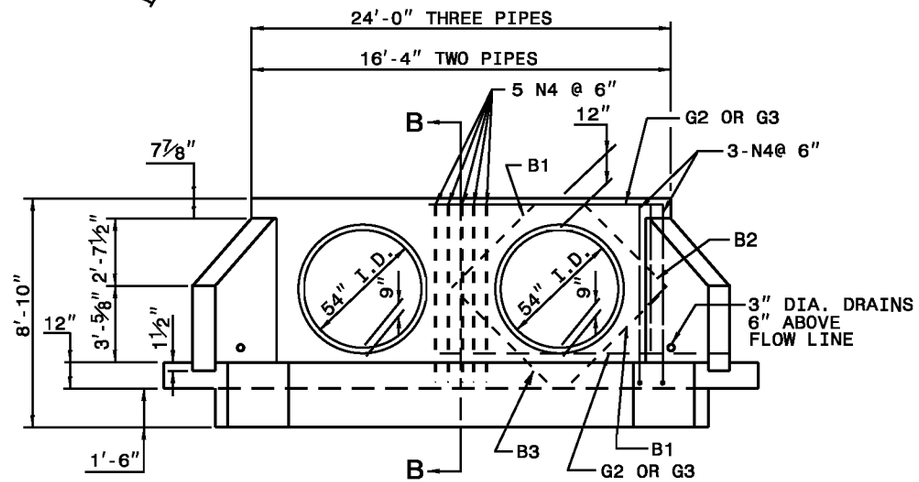

ELEVATION

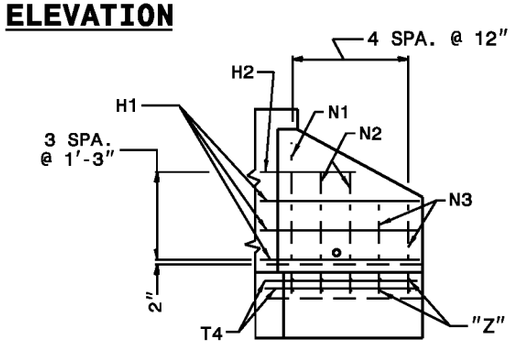

WING ELEVATION

SEE STD. DWG. NO. 838.75 FOR GENERAL NOTES.

STATE OF
NORTH CAROLINA
DEPT. OF TRANSPORTATION
DIVISION OF HIGHWAYS
RALEIGH, N.C.

1-12

ENGLISH STANDARD DRAWING FOR

REINFORCED BRICK ENDWALL

FOR DOUBLE AND TRIPLE 54" PIPES - 90° SKEW

SHEET 1 OF 1

838.52

SHEET 1 OF 1

838.52

STATE OF
NORTH CAROLINA
DEPT. OF TRANSPORTATION
DIVISION OF HIGHWAYS
RALEIGH, N.C.

1-12

ENGLISH STANDARD DRAWING FOR
REINFORCED BRICK ENDWALL
FOR SINGLE 60" PIPE - 90° SKEW

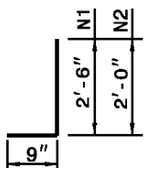

"N" BARS

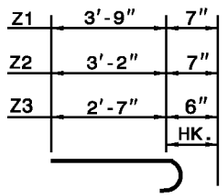

"Z" BARS

"N" & "Z" BAR DIMENSIONS ARE OUT TO OUT.

*PAY FOR CONCRETE AS BRICK MASONRY

BILL OF MATERIAL FOR ENDWALL				
REINF. STEEL			1 PIPE	
BAR	SIZE	LENGTH	NO.	WEIGHT
B1	#5	5'-3"	2	11
B2	#5	3'-9"	2	8
G1	#7	8'-0"	2	33
H1	#4	5'-9"	6	23
H2	#4	4'-0"	2	5
H3	#4	2'-1"	2	3
N1	#5	3'-3"	12	41
N2	#4	2'-9"	6	11
T1	#4	13'-0"	6	52
T4	#4	5'-8"	6	23
T5	#4	2'-6"	36	60
V1	#4	6'-4"	6	25
V2	#4	5'-2"	4	14
V3	#4	3'-11"	4	10
V4	#4	2'-9"	4	7
Z1	#5	4'-4"	6	27
Z2	#5	3'-9"	4	16
Z3	#5	3'-1"	4	8
REINF. STEEL LBS.				377
*CL. "A" CONC. FOOT. C.Y.			3.1	
BR. MASONRY/C.S. C.Y.			2.8	
BR. MASONRY/R.C. C.Y.			2.6	

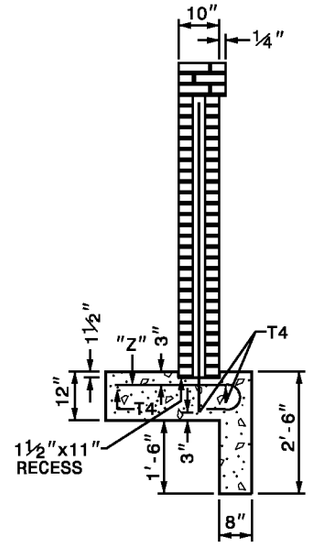

SECTION A-A

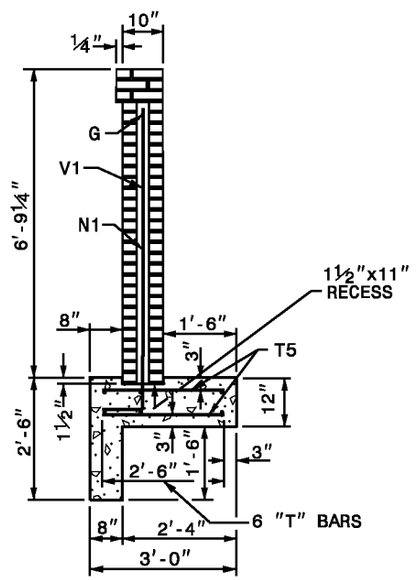

SECTION B-B

SEE STD. DWG. NO. 838.75 FOR GENERAL NOTES.

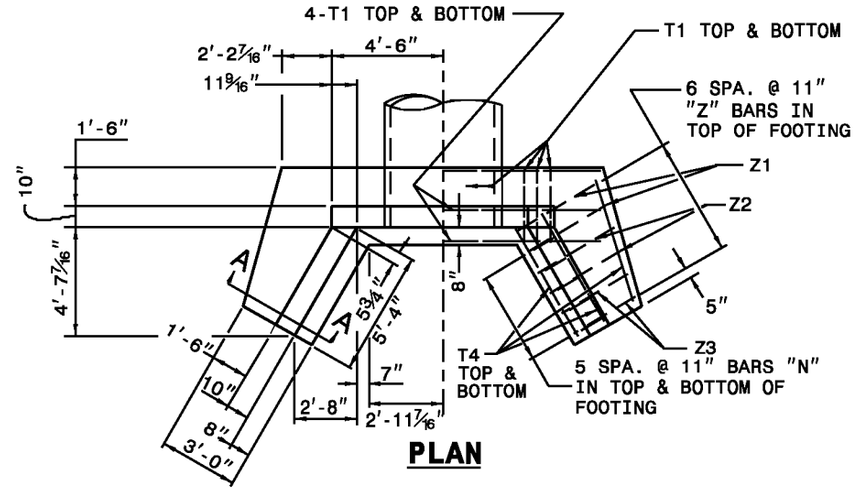

PLAN

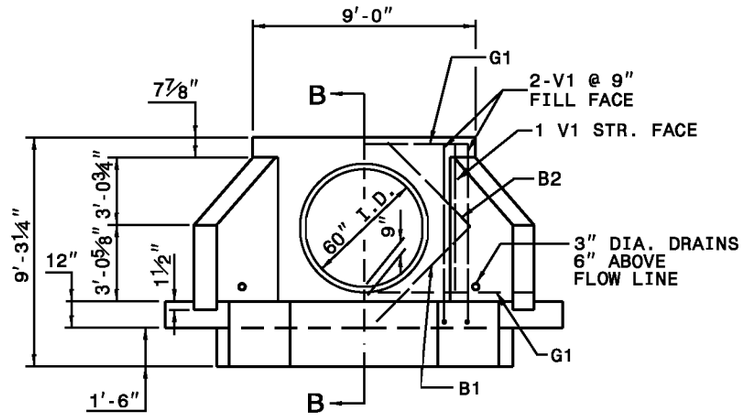

ELEVATION

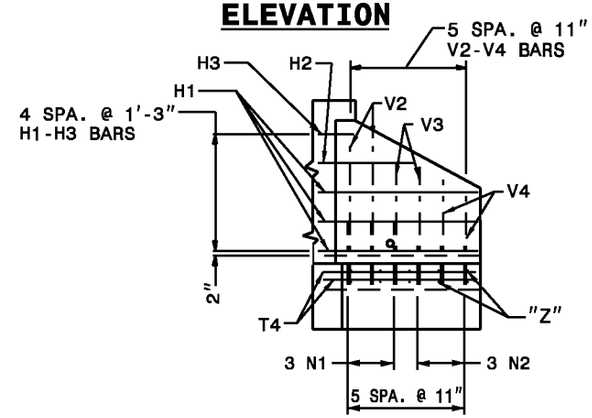

WING ELEVATION

STATE OF
NORTH CAROLINA
DEPT. OF TRANSPORTATION
DIVISION OF HIGHWAYS
RALEIGH, N.C.

1-12

ENGLISH STANDARD DRAWING FOR
REINFORCED BRICK ENDWALL
FOR SINGLE 60" PIPE - 90° SKEW

SHEET 1 OF 1
838.57

SHEET 1 OF 1
838.57

STATE OF NORTH CAROLINA
DEPT. OF TRANSPORTATION
DIVISION OF HIGHWAYS
RALEIGH, N.C.

1-12

ENGLISH STANDARD DRAWING FOR

REINFORCED BRICK ENDWALL

FOR DOUBLE AND TRIPLE 60" PIPES - 90° SKEW

SHEET 1 OF 1

838.58

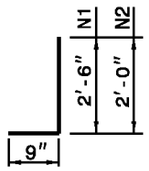

"N" BARS

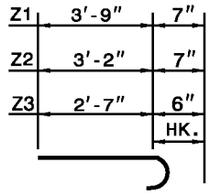

"Z" BARS

"N" & "Z" BAR DIMENSIONS ARE OUT TO OUT.

*PAY FOR CONCRETE AS BRICK MASONRY

BILL OF MATERIAL FOR ENDWALL						
REINF. STEEL			2 PIPES		3 PIPES	
BAR	SIZE	LENGTH	NO.	WEIGHT	NO.	WEIGHT
B1	#5	5'-3"	4	22	6	33
B2	#5	3'-9"	2	8	2	8
B3	#5	6'-3"	2	13	4	26
G2	#7	16'-8"	2	68	-	-
G3	#7	25'-4"	-	-	2	104
H1	#4	5'-9"	6	23	6	23
H2	#4	4'-0"	2	5	2	5
H3	#4	2'-1"	2	3	2	3
N1	#5	3'-3"	17	58	22	75
N2	#4	2'-9"	6	11	6	11
T2	#4	21'-8"	6	87	-	-
T3	#4	15'-10"	-	-	12	127
T4	#4	5'-8"	6	23	6	23
T5	#4	2'-6"	70	117	106	177
V1	#4	6'-4"	11	47	16	68
V2	#4	5'-2"	4	14	4	14
V3	#4	3'-11"	4	10	4	10
V4	#4	2'-9"	4	7	4	7
Z1	#5	4'-4"	6	27	6	27
Z2	#5	3'-9"	4	16	4	16
Z3	#4	3'-1"	4	8	4	8
REINF. STEEL LBS.				567		765
*CL. "A" CONC. FOOT. C.Y.				4.4		5.6
BR. MASONRY/C.S. C.Y.				4.0		5.3
BR. MASONRY/R.C. C.Y.				3.5		4.5

SEE STD. DWG. NO. 838.75 FOR GENERAL NOTES.

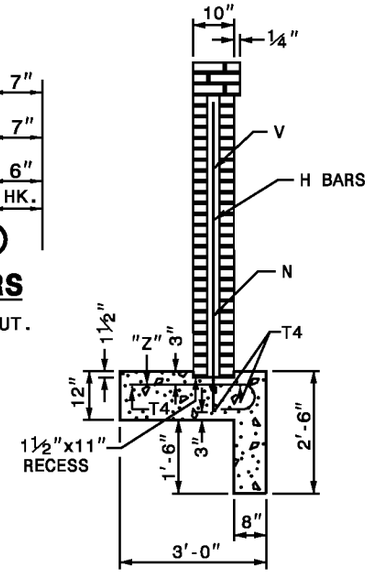

SECTION A-A

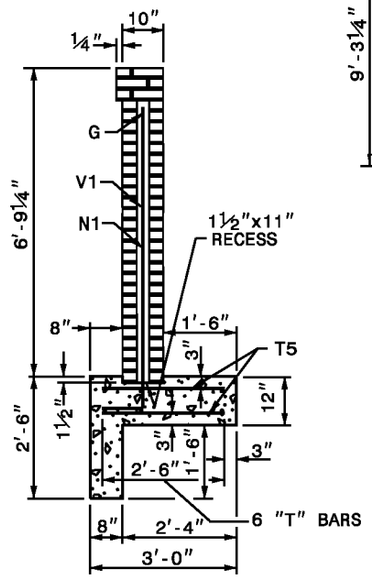

SECTION B-B

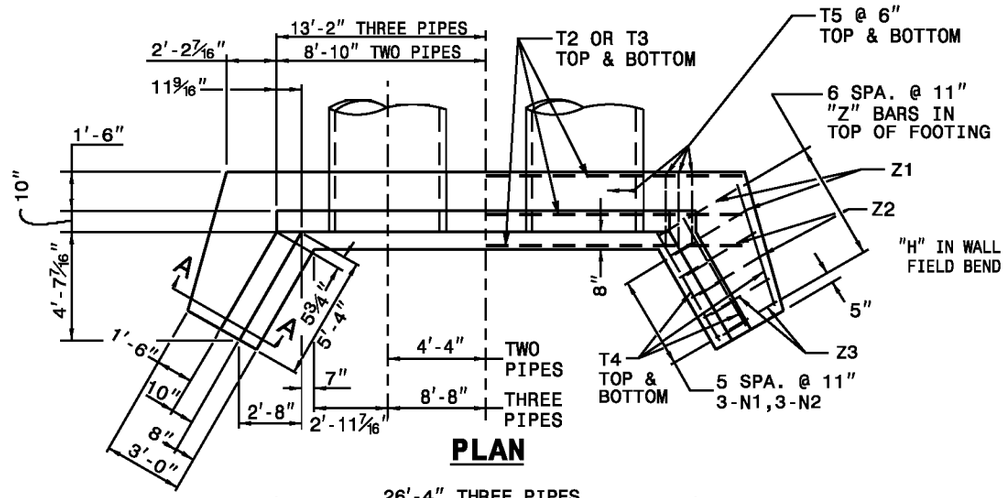

PLAN

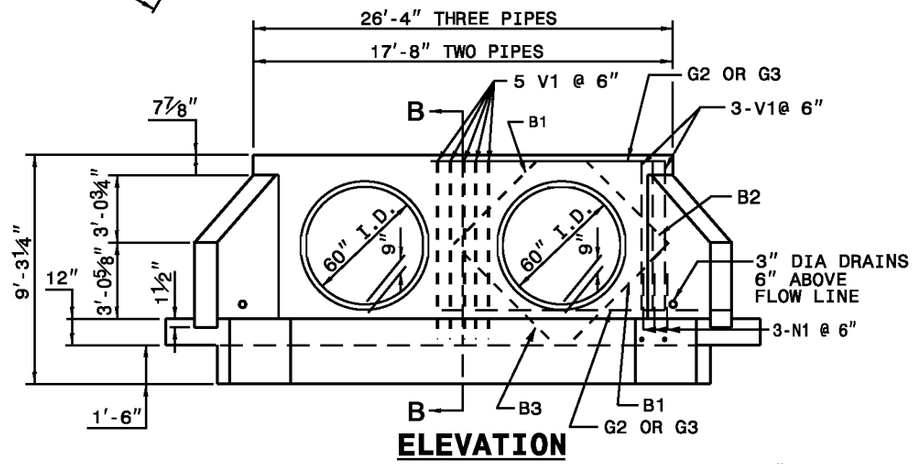

ELEVATION

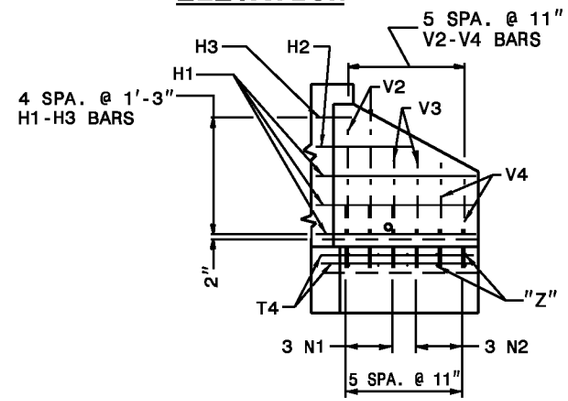

WING ELEVATION

STATE OF NORTH CAROLINA
DEPT. OF TRANSPORTATION
DIVISION OF HIGHWAYS
RALEIGH, N.C.

1-12

ENGLISH STANDARD DRAWING FOR

REINFORCED BRICK ENDWALL

FOR DOUBLE AND TRIPLE 60" PIPES - 90° SKEW

SHEET 1 OF 1

838.58

STATE OF
NORTH CAROLINA
DEPT. OF TRANSPORTATION
DIVISION OF HIGHWAYS
RALEIGH, N.C.

1-12

ENGLISH STANDARD DRAWING FOR

REINFORCED BRICK ENDWALL

FOR SINGLE 66" PIPE - 90° SKEW

SHEET 1 OF 1

838.63

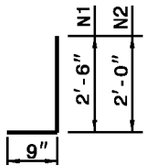

"N" BARS

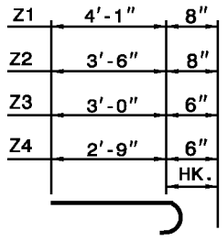

"Z" BARS

"N" & "Z" BAR DIMENSIONS ARE OUT TO OUT.

*PAY FOR CONCRETE AS BRICK MASONRY

BILL OF MATERIAL FOR ENDWALL				
REINF. STEEL			1 PIPE	
BAR	SIZE	LENGTH	NO.	WEIGHT
B1	#5	5'-3"	2	11
B2	#5	4'-0"	2	8
G1	#7	8'-8"	2	35
H1	#4	6'-3"	6	25
H2	#4	5'-0"	2	7
H3	#4	3'-0"	2	4
N1	#5	3'-3"	14	47
N2	#4	2'-9"	6	11
T1	#4	13'-10"	6	55
T4	#4	5'-9"	6	23
T5	#4	2'-6"	36	60
V1	#4	6'-11"	6	27
V2	#4	6'-2"	2	8
V3	#4	5'-3"	4	14
V4	#4	4'-2"	4	11
V5	#4	3'-2"	4	8
Z1	#6	4'-9"	6	43
Z2	#6	4'-2"	4	25
Z3	#4	3'-6"	4	9
Z4	#4	3'-3"	2	4
REINF. STEEL LBS.				435
*CL. "A" CONC. FOOT. C.Y.			3.4	
BR. MASONRY/C.S. C.Y.			3.2	
BR. MASONRY/R.C. C.Y.			2.8	

SEE STD. DWG. NO. 838.75 FOR GENERAL NOTES.

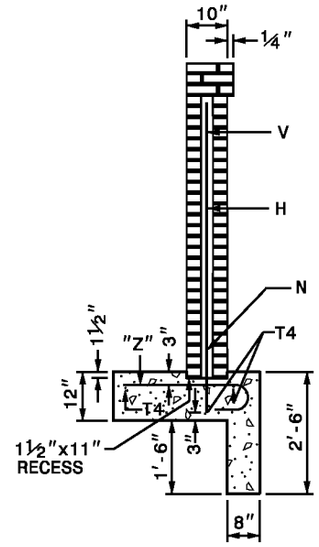

SECTION A-A

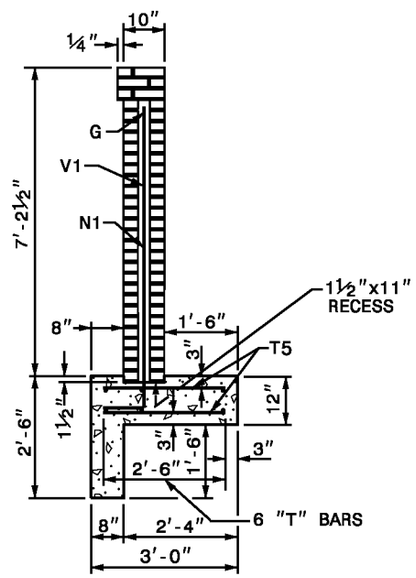

SECTION B-B

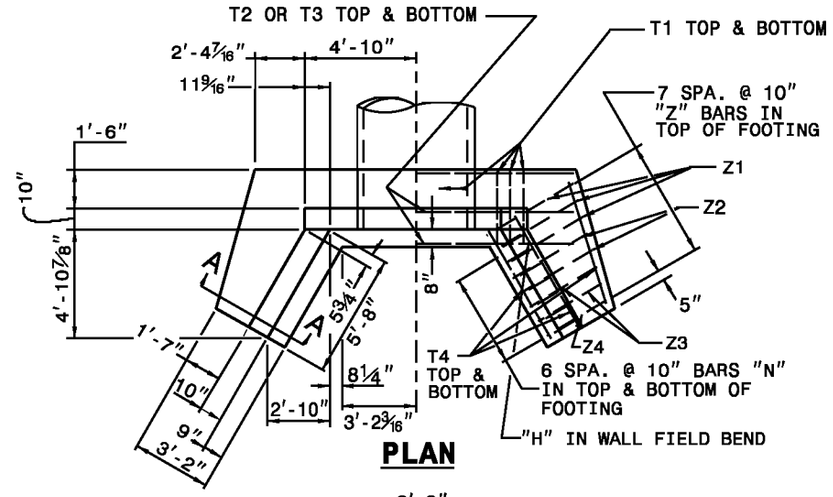

PLAN

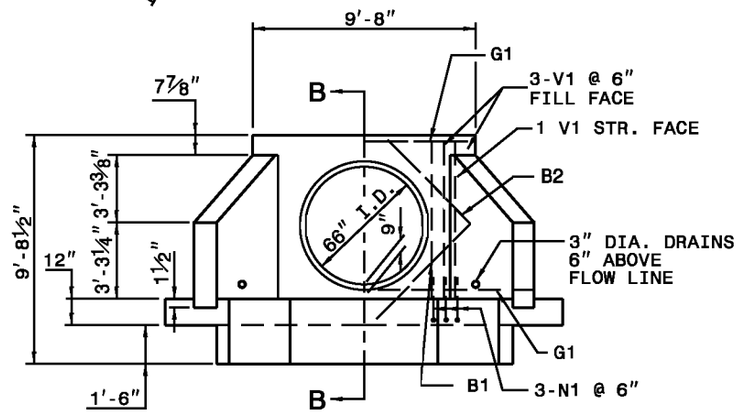

ELEVATION

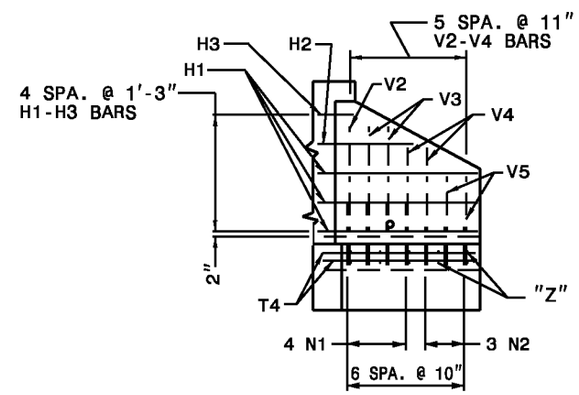

WING ELEVATION

STATE OF
NORTH CAROLINA
DEPT. OF TRANSPORTATION
DIVISION OF HIGHWAYS
RALEIGH, N.C.

1-12

ENGLISH STANDARD DRAWING FOR

REINFORCED BRICK ENDWALL

FOR SINGLE 66" PIPE - 90° SKEW

SHEET 1 OF 1

838.63

STATE OF NORTH CAROLINA
DEPT. OF TRANSPORTATION
DIVISION OF HIGHWAYS
RALEIGH, N.C.

1-12

ENGLISH STANDARD DRAWING FOR

REINFORCED BRICK ENDWALL

FOR DOUBLE AND TRIPLE 66" PIPES - 90° SKEW

SHEET 1 OF 1

838.64

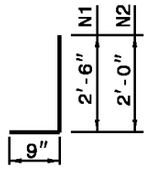

"N" BARS

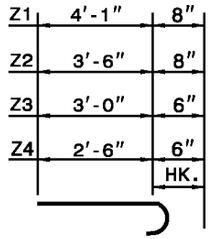

"Z" BARS

"N" & "Z" BAR DIMENSIONS ARE OUT TO OUT.

*PAY FOR CONCRETE AS BRICK MASONRY

BILL OF MATERIAL FOR ENDWALL						
REINF. STEEL			2 PIPES		3 PIPES	
BAR	SIZE	LENGTH	NO.	WEIGHT	NO.	WEIGHT
B1	#5	5'-3"	4	22	6	33
B2	#5	4'-0"	2	8	2	8
B3	#5	7'-0"	2	15	4	29
G2	#7	18'-0"	2	74	-	-
G3	#7	27'-4"	-	-	2	112
H1	#4	6'-3"	6	25	6	25
H2	#4	5'-0"	2	7	2	7
H3	#4	3'-0"	2	4	2	4
N1	#5	3'-3"	19	64	24	81
N2	#4	2'-9"	6	11	6	11
T2	#4	23'-2"	6	93	-	-
T3	#4	16'-11"	-	-	12	136
T4	#4	5'-9"	6	23	6	23
T5	#4	2'-6"	76	127	112	187
V1	#4	6'-11"	11	51	16	74
V2	#4	6'-2"	2	8	2	8
V3	#4	5'-3"	4	14	4	14
V4	#4	4'-2"	4	11	4	11
V5	#4	3'-2"	4	8	4	8
Z1	#6	4'-9"	6	43	6	43
Z2	#6	4'-2"	4	25	4	25
Z3	#4	3'-6"	4	9	4	9
Z4	#4	3'-3"	2	4	2	4
REINF. STEEL LBS.				646		852
*CL. "A" CONC. FOOT. C.Y.				4.8		6.1
BR. MASONRY/C.S. C.Y.				4.5		5.9
BR. MASONRY/R.C. C.Y.				3.9		5.0

SEE STD. DWG. NO. 838.75 FOR GENERAL NOTES.

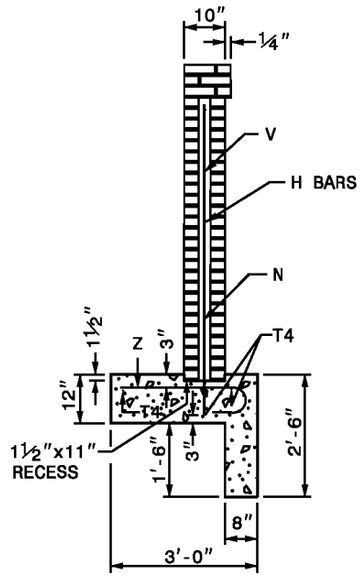

SECTION A-A

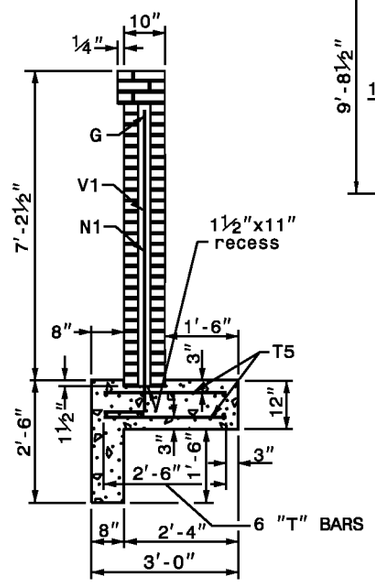

SECTION B-B

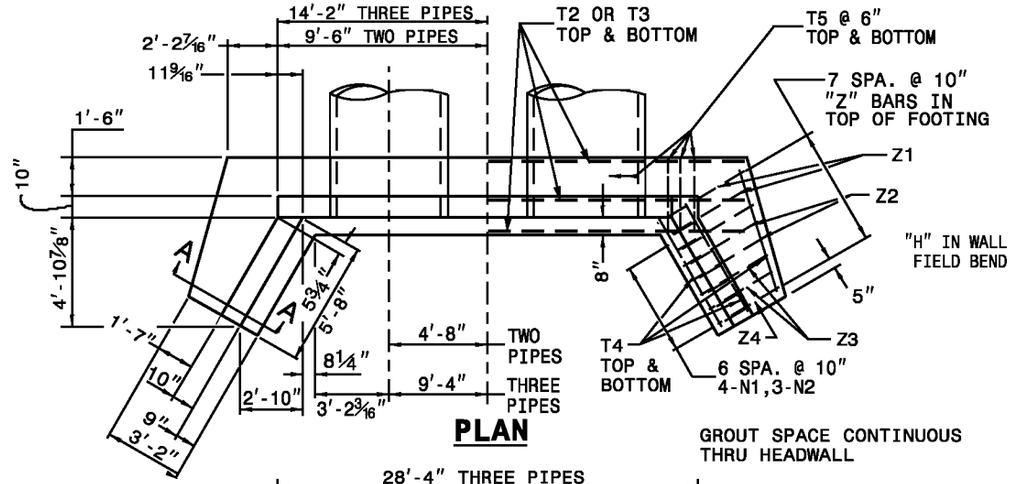

PLAN

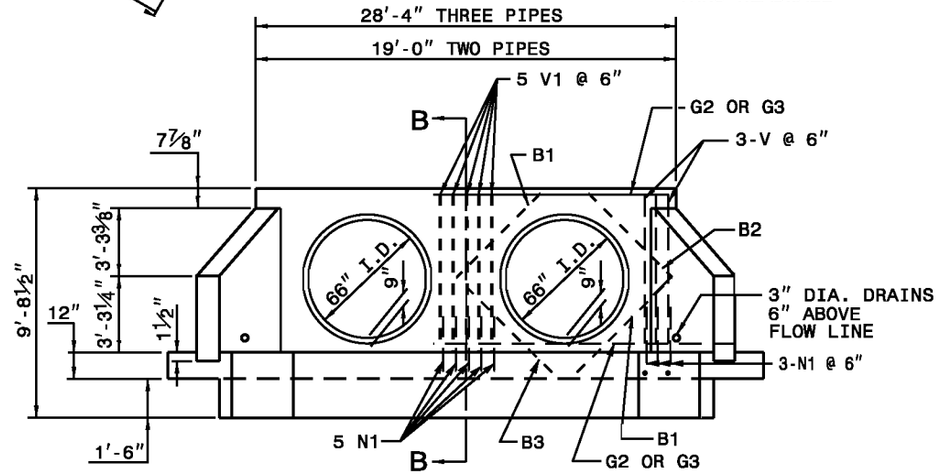

ELEVATION

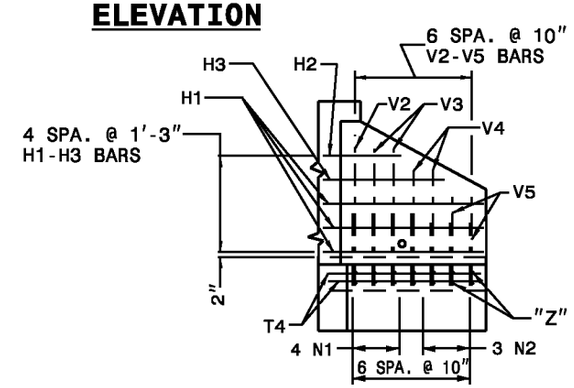

WING ELEVATION

STATE OF NORTH CAROLINA
DEPT. OF TRANSPORTATION
DIVISION OF HIGHWAYS
RALEIGH, N.C.

1-12

ENGLISH STANDARD DRAWING FOR

REINFORCED BRICK ENDWALL

FOR DOUBLE AND TRIPLE 66" PIPES - 90° SKEW

SHEET 1 OF 1

838.64

STATE OF
NORTH CAROLINA
DEPT. OF TRANSPORTATION
DIVISION OF HIGHWAYS
RALEIGH, N.C.

1-12

ENGLISH STANDARD DRAWING FOR

REINFORCED BRICK ENDWALL

FOR SINGLE 72" PIPE - 90° SKEW

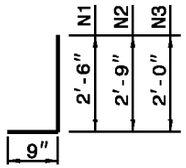

"N" BARS

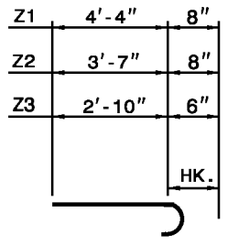

"Z" BARS

"N" & "Z" BAR DIMENSIONS ARE OUT TO OUT.

*PAY FOR CONCRETE AS BRICK MASONRY

BILL OF MATERIAL FOR ENDWALL				
REINF. STEEL			1 PIPE	
BAR	SIZE	LENGTH	NO.	WEIGHT
B1	#5	5'-6"	2	11
B2	#5	4'-3"	2	9
G1	#7	9'-0"	2	37
H1	#4	6'-9"	6	27
H2	#4	5'-8"	2	8
H3	#4	3'-8"	2	5
N1	#5	3'-3"	6	20
N2	#6	3'-6"	8	42
N3	#4	2'-9"	8	15
T1	#4	14'-8"	6	59
T4	#4	6'-6"	6	26
T5	#4	2'-6"	38	67
V1	#4	7'-6"	6	30
V2	#4	6'-7"	4	18
V3	#4	5'-6"	4	15
V4	#4	4'-9"	4	12
V5	#4	3'-5"	4	9
Z1	#6	5'-0"	6	45
Z2	#6	4'-3"	6	38
Z3	#4	3'-4"	6	13
REINF. STEEL LBS.				506
*CL. "A" CONC. FOOT. C.Y.			3.8	
BR. MASONRY/C.S. C.Y.			3.7	
BR. MASONRY/R.C. C.Y.			3.3	

SEE STD. DWG. NO. 838.75 FOR GENERAL NOTES.

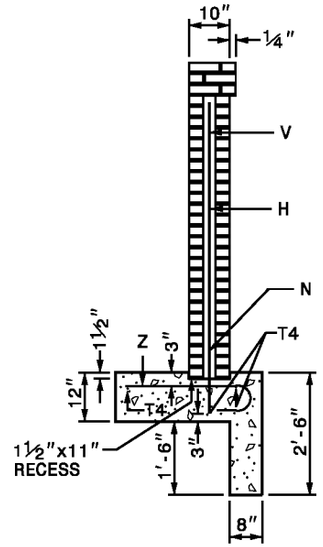

SECTION A-A

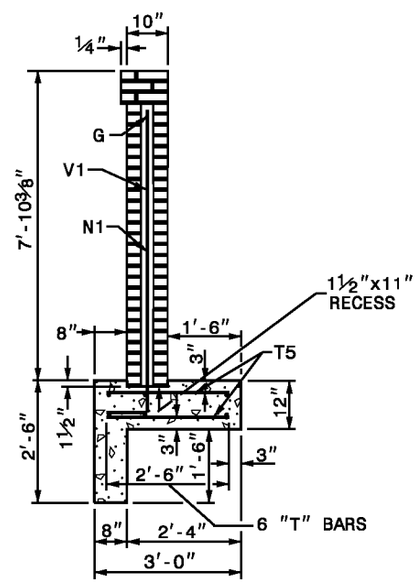

SECTION B-B

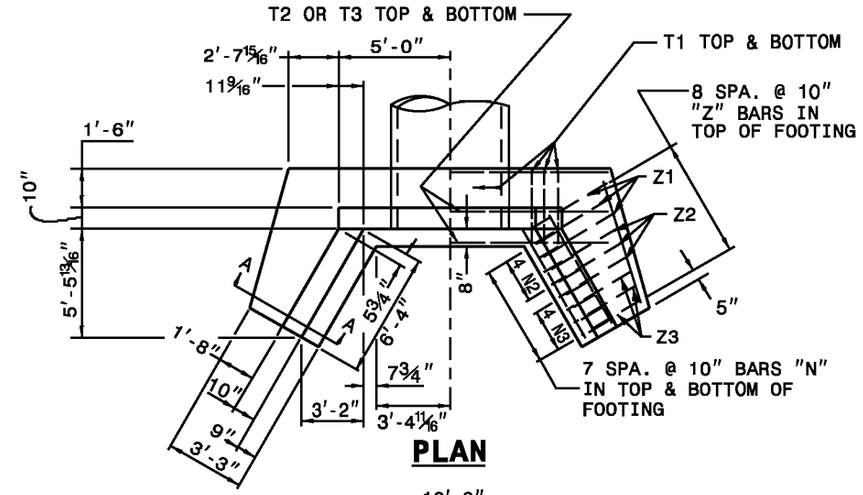

PLAN

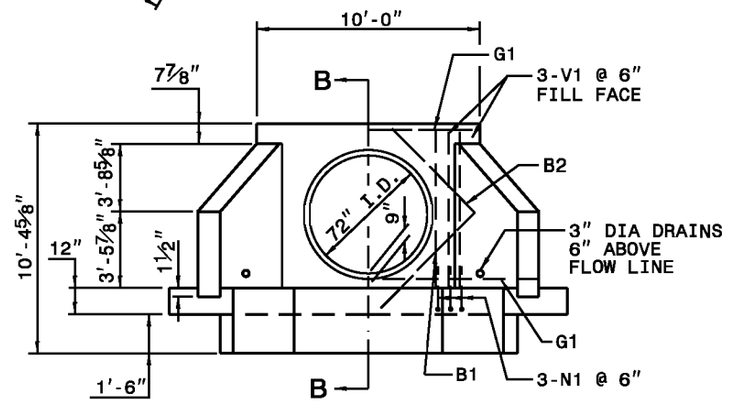

ELEVATION

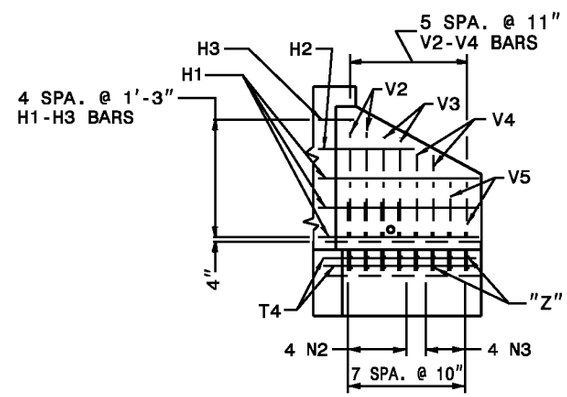

WING ELEVATION

STATE OF
NORTH CAROLINA
DEPT. OF TRANSPORTATION
DIVISION OF HIGHWAYS
RALEIGH, N.C.

1-12

ENGLISH STANDARD DRAWING FOR

REINFORCED BRICK ENDWALL

FOR SINGLE 72" PIPE - 90° SKEW

SHEET 1 OF 1

838.69

SHEET 1 OF 1

838.69

STATE OF
NORTH CAROLINA
DEPT. OF TRANSPORTATION
DIVISION OF HIGHWAYS
RALEIGH, N.C.

1-12

ENGLISH STANDARD DRAWING FOR

REINFORCED BRICK ENDWALL

FOR DOUBLE AND TRIPLE 72" PIPES - 90° SKEW

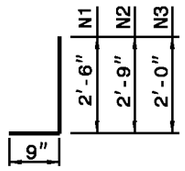

"N" BARS

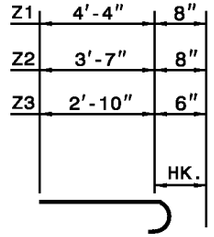

"Z" BARS

"N" & "Z" BAR DIMENSIONS ARE OUT TO OUT.

*PAY FOR CONCRETE AS BRICK MASONRY

BILL OF MATERIAL FOR ENDWALL						
REINF. STEEL			2 PIPES		3 PIPES	
BAR	SIZE	LENGTH	NO.	WEIGHT	NO.	WEIGHT
B1	#5	5'-6"	4	23	6	34
B2	#5	4'-3"	2	9	2	9
B3	#5	7'-3"	2	15	4	30
G2	#7	19'-4"	2	79	-	-
G3	#7	29'-8"	-	-	2	121
H1	#4	6'-9"	6	27	6	27
H2	#4	5'-8"	2	8	2	8
H3	#4	3'-8"	2	5	2	5
N1	#5	3'-3"	11	37	16	54
N2	#6	3'-6"	8	42	8	42
N3	#4	2'-9"	8	15	8	15
T2	#4	25'-0"	6	100	-	-
T3	#4	18'-4"	-	-	12	147
T4	#4	6'-6"	6	26	6	26
T5	#4	2'-6"	82	137	122	204
V1	#4	7'-6"	11	55	16	80
V2	#4	6'-7"	4	18	4	18
V3	#4	5'-6"	4	15	4	15
V4	#4	4'-6"	4	12	4	12
V5	#4	3'-5"	4	9	4	9
Z1	#6	5'-0"	6	45	6	45
Z2	#6	4'-3"	6	38	6	38
Z3	#4	3'-4"	6	13	6	13
REINF. STEEL LBS.				728		952
*CL. "A" CONC. FOOT. C.Y.				5.3		6.8
BR. MASONRY/C.S. C.Y.				5.3		7.0
BR. MASONRY/R.C. C.Y.				4.6		5.9

SEE STD. DWG. NO. 838.75 FOR GENERAL NOTES.

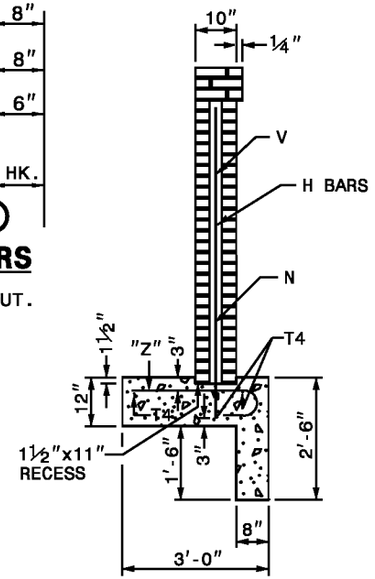

SECTION A-A

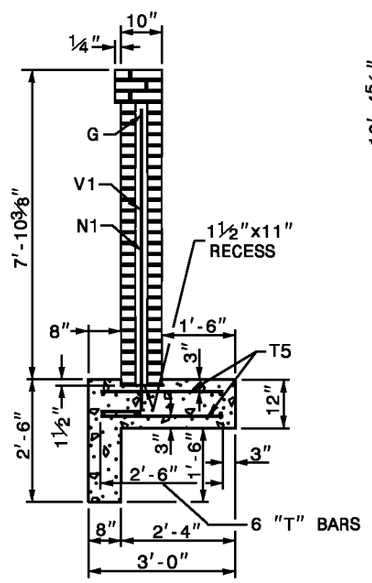

SECTION B-B

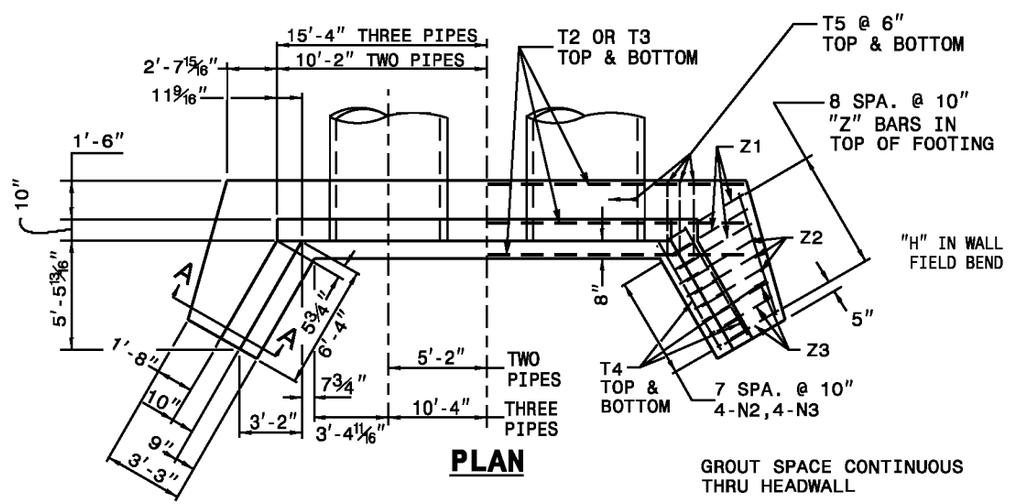

PLAN

GROUT SPACE CONTINUOUS
THRU HEADWALL

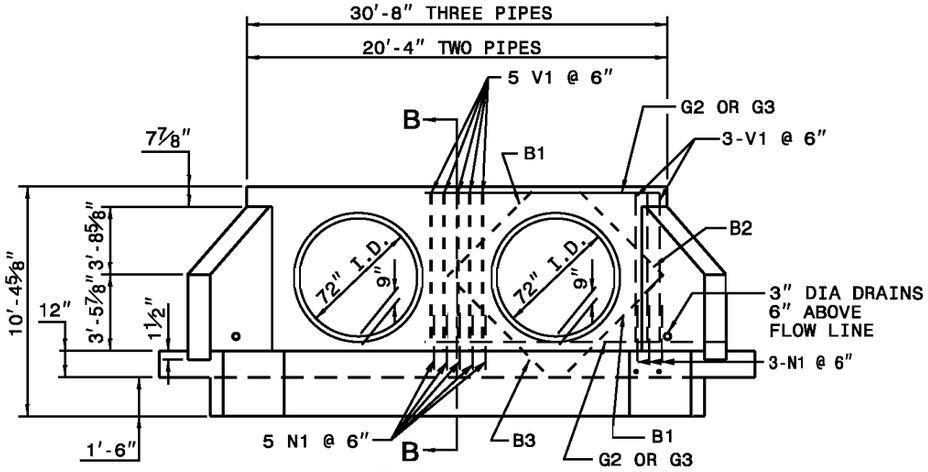

ELEVATION

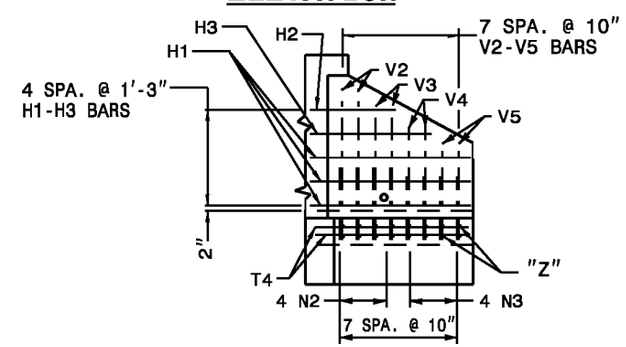

WING ELEVATION

STATE OF
NORTH CAROLINA
DEPT. OF TRANSPORTATION
DIVISION OF HIGHWAYS
RALEIGH, N.C.

1-12

ENGLISH STANDARD DRAWING FOR

REINFORCED BRICK ENDWALL

FOR DOUBLE AND TRIPLE 72" PIPES - 90° SKEW

SHEET 1 OF 1

838.70

SHEET 1 OF 1

838.70

STATE OF
NORTH CAROLINA
DEPT. OF TRANSPORTATION
DIVISION OF HIGHWAYS
RALEIGH, N.C.

1-12

ENGLISH STANDARD DRAWING FOR

NOTES FOR REINFORCED BRICK ENDWALL

STANDARD DRAWINGS 838.51 THRU 838.70

SHEET 1 OF 1

838.75

DESIGN DATA

SPECIFICATIONS	AASHTO
STEEL IN TENSION	20,000 PSI
CONCRETE IN COMPRESSION	1,200 PSI
BRICK MASONRY IN COMPRESSION	1,000 PSI
CONCRETE IN SHEAR	90 PSI
BRICK MASONRY IN SHEAR	50 PSI
EQUIVALENT FLUID PRESSURE OF EARTH	30 LBS. PER CU. FT.

GENERAL NOTES:

SELECT BRICK FROM SAMPLES SUBMITTED TO THE ENGINEER PRIOR TO BEGINNING CONSTRUCTION. USE BRICK OF SIZE 2¼"x 3⅝"x 7⅝". CONTRACTOR MAY SUBSTITUTE A LARGER BRICK BUT NOT EXCEEDING 3⅝" X 3⅝" X 11⅝". IF A LARGER SIZE IS USED, KEEP BRICK FALL WITHIN NEAT LINES SHOWN ON PLANS. USE ONLY ONE SIZE BRICK IN ANY ONE STRUCTURE. USE CLASS "B" OR BETTER CONCRETE FOR GROUT. GROUT THE CAVITY AREA AT INTERVALS FROM ONE TO NOT MORE THAN FOUR BRICK COURSES AT A TIME. STOP EACH GROUT POUR AT LEAST 1" BELOW TOP OF BRICK COURSE AND ROD TO INSURE FILLING OF ALL VOIDS.

DO NOT PERMIT HEADERS TO CROSS THE GROUTED AREA. PLACE HORIZONTAL REINFORCEMENT LOOSE IN THE GROUT SPACE AS WORK PROGRESSES. PLACE VERTICAL REINFORCEMENT IN THE CENTER OF THE GROUT SPACE. PERMANENT TIES ARE NOT NECESSARY. USE TEMPORARY TIES TO HOLD VERTICAL BARS IN PLACE. CONSTRUCT NEITHER SIDE OF OF THE WALL ABOVE THE OTHER SIDE TO A HEIGHT EXCEEDING SIX (6) COURSES. CONCAVE ALL EXPOSED JOINTS.

USE CLASS 'A' CONCRETE IN THE FOOTINGS.

CONSTRUCT ALL MORTAR JOINTS ⅜" ± ⅛".

PLACE A STONE DRAIN CONSISTING OF ONE (1) CUBIC FOOT OF NUMBER 78M STONE CONTAINED IN A POROUS FABRIC AT EACH WEEP HOLE. PLACE SUBDRAIN FINE AGGREGATE BENEATH, AROUND AND OVER THE STONE DRAIN SO THE STONE DRAIN IS COMPLETELY COVERED BY A LAYER OF SUBDRAIN FINE AGGREGATE AT LEAST ONE (1) FOOT THICK. WHERE MORE THAN ONE WEEP HOLE IN A WING WALL EXISTS, PLACE A HORIZONTAL DRAIN OF SUBDRAIN FINE AGGREGATE AT LEAST ONE (1) FOOT SQUARE IN CROSS SECTION TO CONNECT ALL STONE DRAINS. PLACE A VERTICAL DRAIN OF SUBDRAIN FINE AGGREAGTE AT LEAST ONE (1) FOOT SQUARE IN CROSS SECTION AT EACH WEEP HOLE TO AN ELEVATION OF TWO (2) FEET BELOW THE SURFACE OF THE EMBANKMENT.

STATE OF
NORTH CAROLINA
DEPT. OF TRANSPORTATION
DIVISION OF HIGHWAYS
RALEIGH, N.C.

1-12

ENGLISH STANDARD DRAWING FOR

NOTES FOR REINFORCED BRICK ENDWALL

STANDARD DRAWINGS 838.51 THRU 838.70

SHEET 1 OF 1

838.75

STATE OF
NORTH CAROLINA
DEPT. OF TRANSPORTATION
DIVISION OF HIGHWAYS
RALEIGH, N.C.

1-12

ENGLISH STANDARD DRAWING FOR

PRECAST CONCRETE ENDWALL

FOR SINGLE 12" THRU 72" PIPE - 90° SKEW

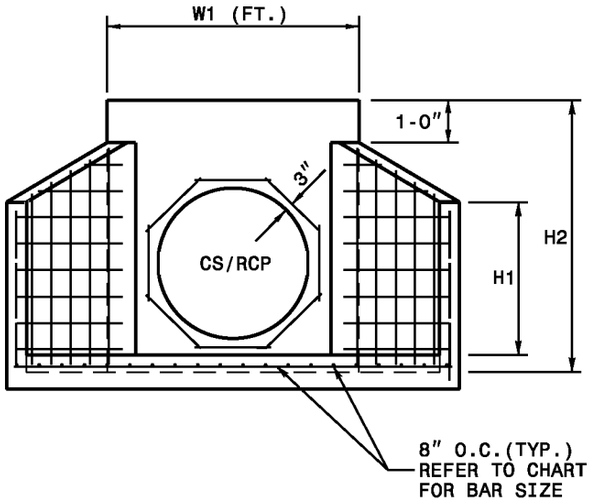

ELEVATION

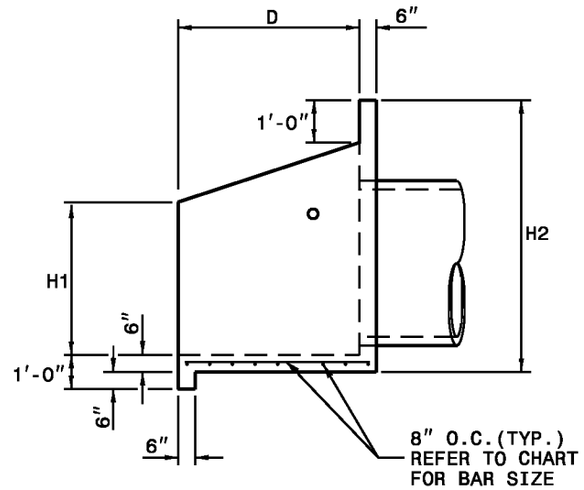

SIDE

NOTES:

* THIS PRECAST ENDWALL MAY BE USED FOR THE FOLLOWING STANDARDS: 838.01, 838.11, 838.21, 838.27, 838.33, 838.39, 838.51, 838.57, 838.63 AND 838.69.
* INSTALL PRECAST ENDWALLS WITH WINGS AND PAY FOR IN ACCORDANCE WITH SPECIFICATION SECTION 838.
* USE 4000 PSI CONCRETE.
* PROVIDE ALL REINFORCING STEEL WHICH MEETS ASTM A615 FOR GRADE 60 AND WELDED WIRE FABRIC CONFORMING TO ASTM A185 WITH 2" MIN. CLEARANCE.
* PLACE LIFT HOLES OR PINS IN ACCORDANCE WITH OSHA STANDARD 1926.704.
* PIPE TO BE GROUTED INTO HEADWALL AT JOB SITE BY CONTRACTOR
* ALL ELEMENTS PRECAST TO MEET ASTM C913.
* WELDED WIRE FABRIC MAY BE SUBSTITUTED FOR REBAR AS LONG AS THE SAME AREA OF STEEL IS PROVIDED.
* CHAMFER ALL CORNERS 1" OR HAVE A RADIUS OF 1".

NOTE: THE MINIMUM BAR SIZE SHALL BE #5 BARS AT 8" CTS.THE CONTRACTOR WILL HAVE THE OPTION TO INCREASE THIS BAR SIZE AS NEEDED.

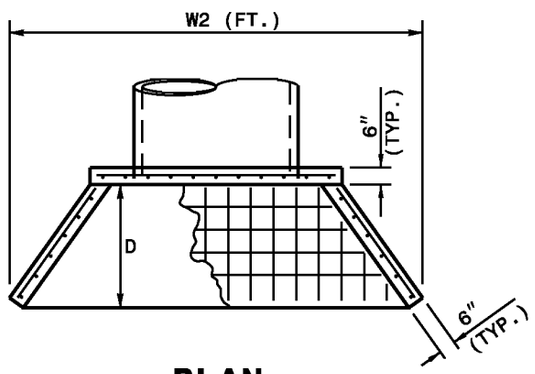

PLAN

ENDWALL DIMENSIONS

FT. PIPE DIA.	MINIMUM BAR SIZE	MIN./MAX. H1(FT.)	MIN./MAX. H2(FT.)	MIN./MAX. D (FT.)	MIN./MAX. W1	MIN./MAX. W2
1.0	#5 @ 8"	1.25/2.00	2.00/3.75	1.25/1.75	3.00/3.75	5.50/6.00
1.25	#5 @ 8"	1.25/2.00	3.00/3.75	1.25/2.00	3.50/3.75	6.50/6.75
1.50	#5 @ 8"	1.25/2.00	3.00/4.25	1.50/2.50	3.50/3.75	6.50/6.75
2.0	#5 @ 8"	1.50/2.50	4.00/4.75	1.75/2.50	4.00/4.25	7.50/8.25
2.5	#5 @ 8"	2.50/3.50	4.00/6.00	2.00/3.00	4.50/5.50	10.00/11.50
3.0	#5 @ 8"	3.00/3.50	5.00/6.00	2.75/3.50	5.25/5.75	11.50/11.75
3.5	#5 @ 8"	3.25/4.50	6.00/6.75	3.25/3.50	6.00/6.75	12.00/13.25
4.0	#5 @ 8"	3.50/4.50	6.50/7.00	3.25/3.50	6.50/6.75	13.00/13.25
4.5	#5 @ 8"	4.00/5.00	6.50/8.50	3.25/4.00	7.00/9.25	13.50/15.75
5.0	#5 @ 8"	4.50/5.00	7.00/8.50	3.25/4.00	7.25/9.25	13.75/15.75
5.5	#5 @ 8"	4.50/5.00	7.50/8.50	3.25/4.00	7.25/9.25	14.00/15.75
6.0	#5 @ 8"	4.50/5.00	7.50/8.50	3.25/4.00	7.75/9.25	14.75/16.75

STATE OF
NORTH CAROLINA
DEPT. OF TRANSPORTATION
DIVISION OF HIGHWAYS
RALEIGH, N.C.

1-12

ENGLISH STANDARD DRAWING FOR

PRECAST CONCRETE ENDWALL

FOR SINGLE 12" THRU 72" PIPE - 90° SKEW

SHEET 1 OF 1
838.80

STATE OF
NORTH CAROLINA
DEPT. OF TRANSPORTATION
DIVISION OF HIGHWAYS
RALEIGH, N.C.

1-12

ENGLISH STANDARD DRAWING FOR

CONCRETE BASE PAD FOR DRAINAGE STRUCTURES

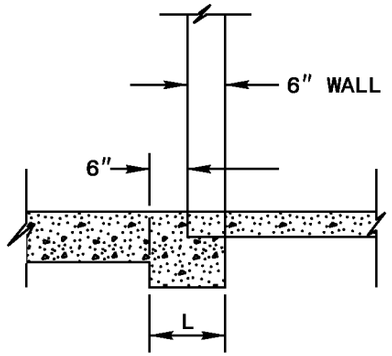

PART SECTION
6" WALL

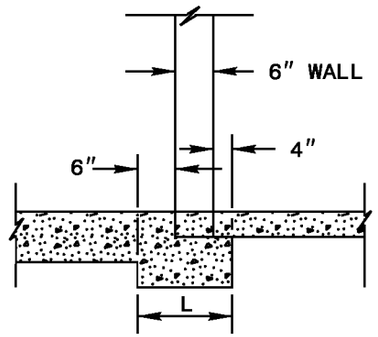

PART SECTION
6" WALL WITH 4" LIP

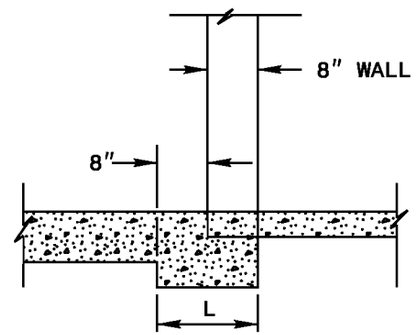

PART SECTION
8" WALL

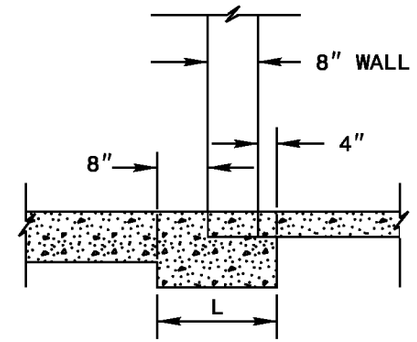

PART SECTION
8" WALL WITH 4" LIP

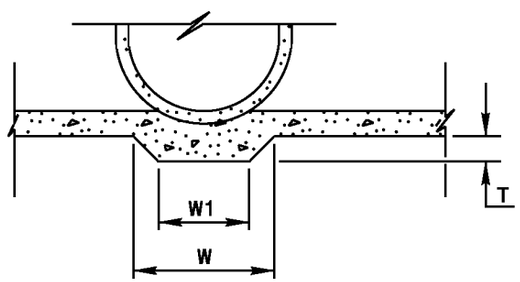

PART SECTION
OF END ELEVATION

GENERAL NOTES:

USE THIS STANDARD WITH ALL DRAINAGE STRUCTURES USING REINFORCED CONCRETE PIPE SET IN BASE SLAB.

TABLES OF QUANTITIES FOR PIPE SET IN PAD

PIPE D	"W" DIM	"W1" DIM	"T" DIM	C.Y. QUANTITIES WHEN L IS 12"	16"	20"
12"	1'-1⅞"	0'-7⅞"	0'-2"	0.005	0.007	0.008
15"	1'-3⅝"	0'-9⅛"	0'-2"	0.006	0.008	0.010
18"	1'-5¼"	0'-10⅜"	0'-2"	0.007	0.010	0.012
24"	1'-8¾"	1'-0⅛"	0'-3"	0.011	0.014	0.018
30"	2'-0¼"	1'-2¾"	0'-3½"	0.014	0.018	0.023
36"	2'-3¾"	1'-5⅜"	0'-4"	0.017	0.023	0.025
42"	2'-7⅛"	1'-7"	0'-5¼"	0.025	0.030	0.038
48"	2'-10⅝"	1'-8¾"	0'-5¾"	0.028	0.038	0.047
54"	3'-2⅛"	1'-10½"	0'-6¼"	0.035	0.047	0.058
60"	3'-5⅝"	2'-0¼"	0'-6¾"	0.042	0.056	0.071
66"	3'-9"	2'-2¼"	0'-7¼"	0.050	0.067	0.084
72"	4'-0½"	2'-3¾"	0'-7¾"	0.059	0.078	0.098

SHEET 1 OF 1
840.00

STATE OF
NORTH CAROLINA
DEPT. OF TRANSPORTATION
DIVISION OF HIGHWAYS
RALEIGH, N.C.

1-12

ENGLISH STANDARD DRAWING FOR
CONCRETE BASE PAD
FOR DRAINAGE STRUCTURES

SHEET 1 OF 1
840.00

STATE OF
NORTH CAROLINA
DEPT. OF TRANSPORTATION
DIVISION OF HIGHWAYS
RALEIGH, N.C.

1-12

ENGLISH STANDARD DRAWING FOR

BRICK CATCH BASIN

12" THRU 54" PIPE

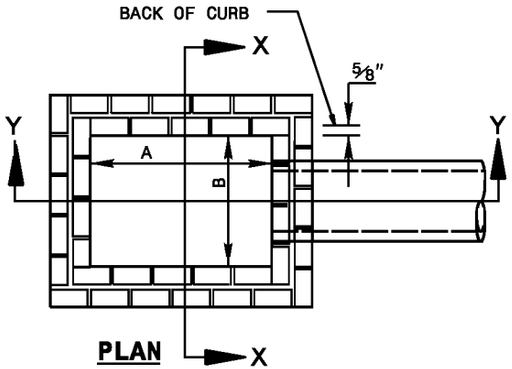

PLAN

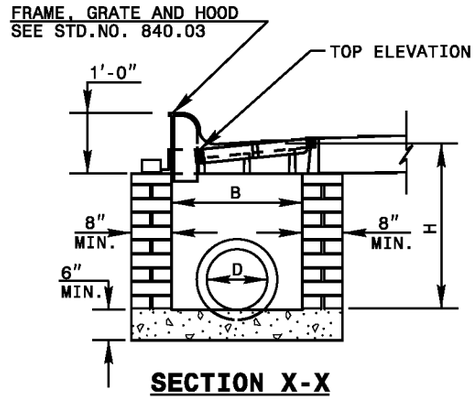

SECTION X-X

NOTES: MORTAR JOINTS ½" +/- ⅛" THICK.
USE CLASS "B" CONCRETE THROUGHOUT.
USE FORMS FOR CONSTRUCTION OF THE BOTTOM SLAB.
DEDUCT FOR PIPE(S) FROM TOTAL CU. YDS. OF BRICK MASONRY.
USE #4 BAR DOWELS AT 12" CENTERS.
PROVIDE ALL CATCH BASINS OVER 3'-6" IN DEPTH WITH STEPS 12" ON CENTER. USE STEPS WHICH COMPLY WITH STD. DRAWING 840.66.
USE TYPE "E", "F" AND "G" GRATES UNLESS OTHERWISE INDICATED.
USE BRICK OR CONCRETE BLOCK WHICH COMPLIES WITH THE REQUIREMENTS OF SECTION 840 OF THE STANDARD SPECIFICATIONS.
IF REINFORCED CONCRETE PIPE IS SET IN BOTTOM SLAB OF BOX, ADD TO SLAB AS SHOWN ON STD. NO. 840.00.
FOR 8'-0" IN HEIGHT OR LESS, USE 8" WALL. OVER 8'-0" IN HEIGHT, USE 12" WALL TO 6'-0" FROM TOP OF WALL AND 8" WALL FOR THE REMAINING 6'-0". QUANTITES TO BE ADJUSTED ACCORDINGLY.
CONSTRUCT WITH PIPE CROWNS MATCHING.
CHAMFER ALL EXPOSED CORNERS 1".
DRAWING NOT TO SCALE.

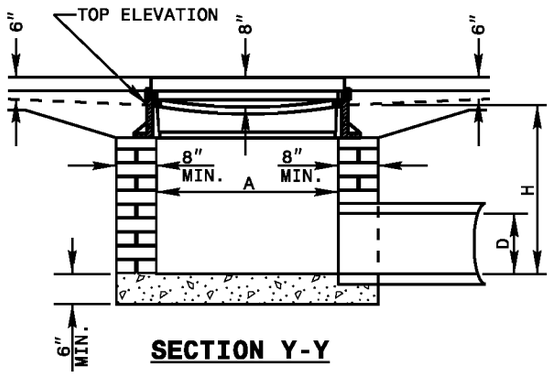

SECTION Y-Y

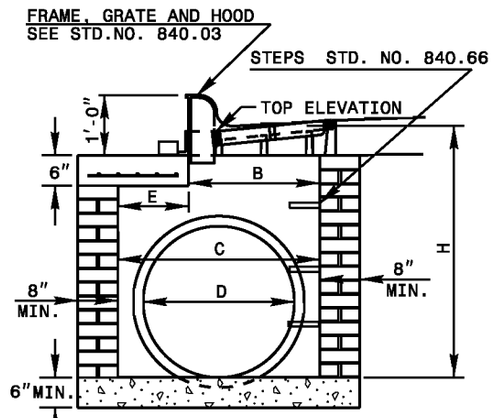

SECTION J-J

WHERE 30" TO 36" PIPE IS USED

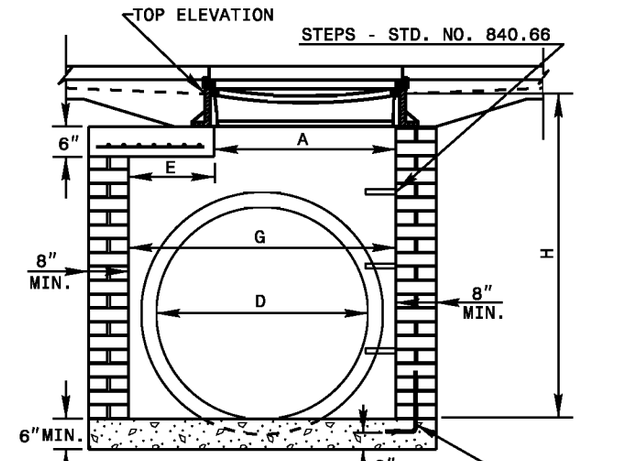

SECTION M-M

WHERE 42" TO 54" PIPE IS USED

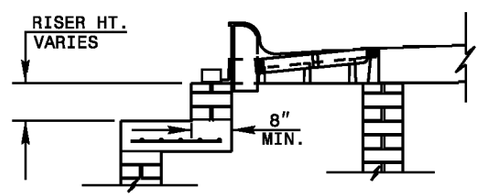

WHERE 30" TO 36" PIPE IS USED

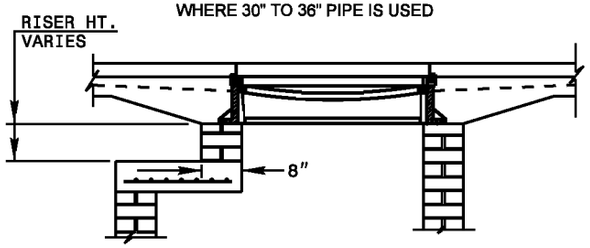

WHERE 42" TO 54" PIPE IS USED

DETAIL SHOWING METHOD OF RISER CONSTRUCTION

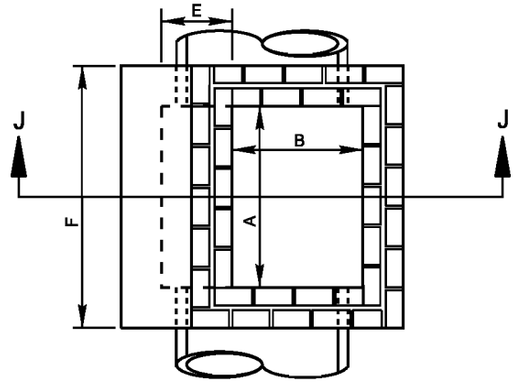

PLAN

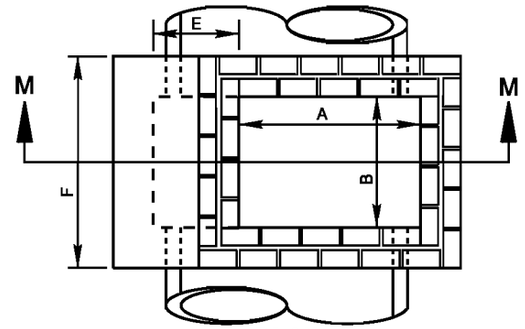

PLAN

SHEET 1 OF 2

840.01

STATE OF
NORTH CAROLINA
DEPT. OF TRANSPORTATION
DIVISION OF HIGHWAYS
RALEIGH, N.C.

1-12

ENGLISH STANDARD DRAWING FOR

BRICK CATCH BASIN

12" THRU 54" PIPE

SHEET 1 OF 2

840.01

STATE OF
NORTH CAROLINA
DEPT. OF TRANSPORTATION
DIVISION OF HIGHWAYS
RALEIGH, N.C.

1-12

ENGLISH STANDARD DRAWING FOR

BRICK CATCH BASIN

12" THRU 54" PIPE

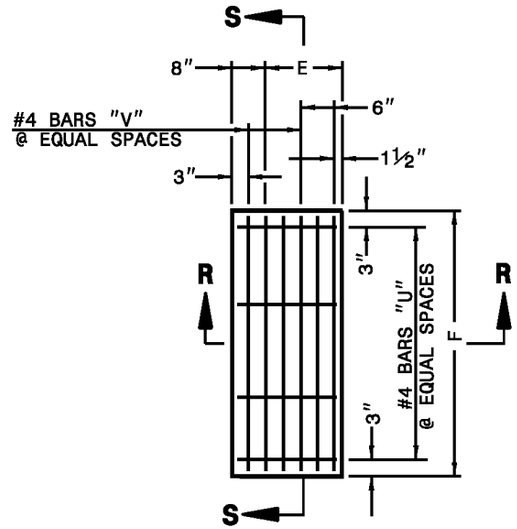

PLAN OF TOP SLAB

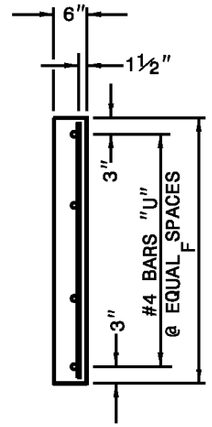

SECTION S-S

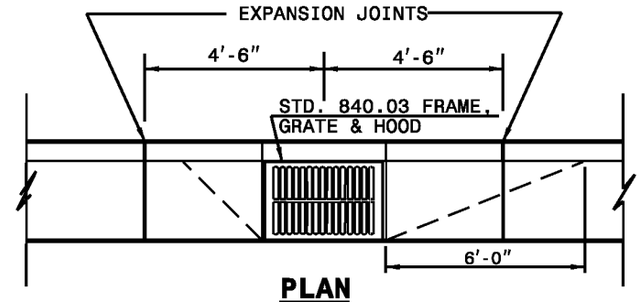

PLAN

CURB AND GUTTER WITH CATCH BASIN ON STEEP GRADES

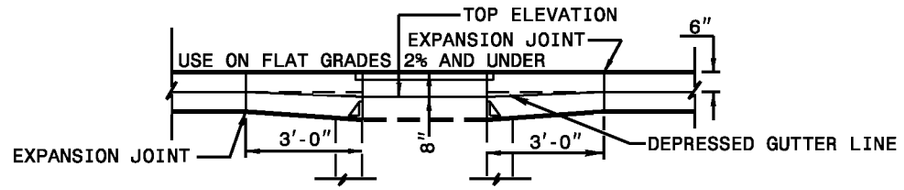

ELEVATION

NORMAL CURB AND GUTTER ON LIGHT GRADES

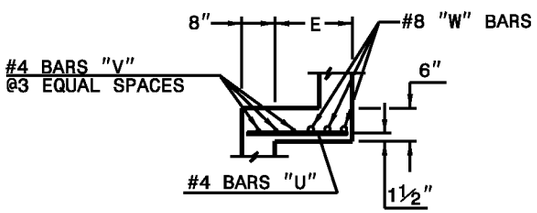

SECTION R-R

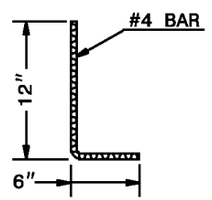

DOWEL

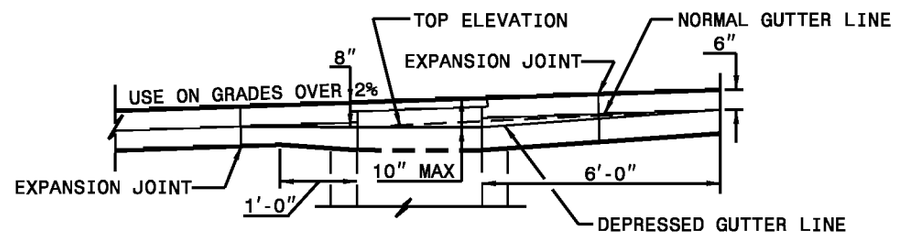

ELEVATION

NORMAL CURB AND GUTTER ON STEEP GRADES

MINIMUM DIMENSIONS AND QUANTITIES FOR BRICK CATCH BASIN(BASED ON MIN. HEIGHT, H, WITH NO RISER)*

DIMENSIONS OF BOX AND PIPE						TOP SLAB DIMENSIONS		BARS-U		BARS-V		BARS-W		TOTAL LBS.	CU.YDS. CONC. IN BOX			BRICK MASONRY		DEDUCTIONS ONE PIPE	
PIPE	SPAN	WIDTH	WIDTH	SPAN	MIN. HEIGHT										TOP SLAB	BOTTOM SLAB	TOTAL CONC.	BRICK MSNR. IN WALLS	TOTAL BRICK AND CONCRETE	C.M.	R.C.
D	A	B	C	G	H	E	F	NO.	LENGTH	NO.	LENGTH	NO.	LENGTH								
12"	3'-0"	2'-2"	--	--	2'-9"	--	--	--	--	--	--	--	--	--	--	0.281	0.281	0.883	1.164	0.020	0.042
15"	3'-0"	2'-2"			3'-0"											0.281	0.281	0.963	1.244	0.031	0.047
18"	3'-0"	2'-2"			3'-3"											0.281	0.281	1.043	1.324	0.044	0.065
24"	3'-0"	2'-2"			3'-9"											0.281	0.281	1.204	1.485	0.078	0.121
30"	3'-0"	2'-2"	3'-4"		4'-3"	1'-2"	4'-4"	4	1'-6"	3	4'-1"	3	4'-1"	45	0.147	0.374	0.521	1.606	2.217	0.122	0.184
36"	3'-0"	2'-2"	3'-10"		4'-9"	1'-8"	4'-4"	4	2'-0"	4	4'-1"	3	4'-1"	49	0.187	0.415	0.602	1.914	2.516	0.176	0.261
42"	3'-0"	2'-2"		4'-5"	5'-3"	1'-5"	3'-6"	4	1'-9"	3	3'-3"	3	3'-3"	38	0.135	0.373	0.508	2.152	2.660	0.240	0.371
48"	3'-0"	2'-2"		5'-0"	5'-9"	2'-0"	3'-6"	4	2'-6"	4	3'-3"	3	3'-3"	41	0.173	0.410	0.583	2.415	2.998	0.313	0.477
54"	3'-0"	2'-2"		5'-7"	6'-3"	2'-7"	3'-6"	4	3'-0"	6	3'-3"	3	3'-3"	47	0.211	0.448	0.659	2.806	3.465	0.396	0.595

* RISER HAS .321 CUBIC YARDS OF BRICK MASONRY PER FOOT HEIGHT

SHEET 2 OF 2

840.01

STATE OF
NORTH CAROLINA
DEPT. OF TRANSPORTATION
DIVISION OF HIGHWAYS
RALEIGH, N.C.

1-12

ENGLISH STANDARD DRAWING FOR

BRICK CATCH BASIN

12" THRU 54" PIPE

SHEET 2 OF 2

840.01

STATE OF
NORTH CAROLINA
DEPT. OF TRANSPORTATION
DIVISION OF HIGHWAYS
RALEIGH, N.C.

1-12

ENGLISH STANDARD DRAWING FOR
CONCRETE CATCH BASIN
12" THRU 54" PIPE

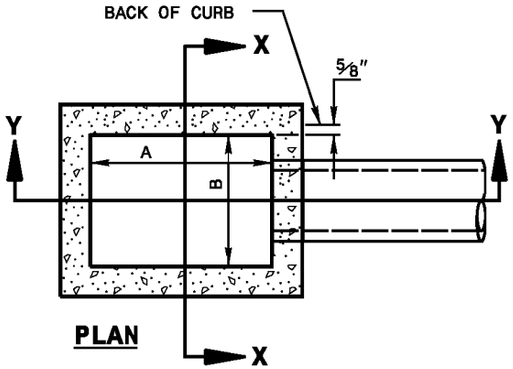

PLAN

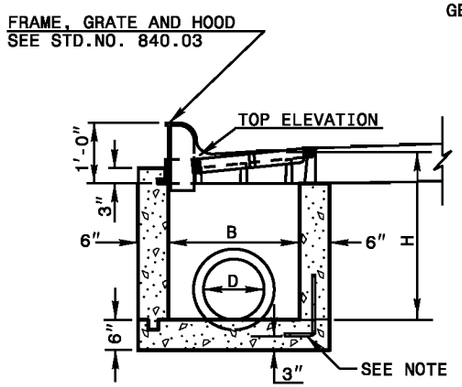

SECTION X-X

GENERAL NOTES:

USE CLASS "B" CONCRETE THROUGHOUT.

PROVIDE ALL CATCH BASINS OVER 3'-6" IN DEPTH WITH STEPS 12" ON CENTER. USE STEPS WHICH COMPLY WITH STD. DRAWING 840.66.

OPTIONAL CONSTRUCTION - MONOLITHIC POUR, 2" KEYWAY, OR #4 BAR DOWELS AT 12" CENTERS AS DIRECTED BY THE ENGINEER.

USE FORMS FOR THE CONSTRUCTION OF THE BOTTOM SLAB.

IF REINFORCED CONCRETE PIPE IS SET IN BOTTOM SLAB OF BOX, ADD TO SLAB AS SHOWN ON STD. NO. 840.00.

USE TYPE "E", "F" AND "G" GRATES UNLESS OTHERWISE INDICATED.

FOR 8'-0" IN HEIGHT OR LESS USE 6" WALLS AND BOTTOM SLAB. OVER 8'-0" TO 16'-0" IN HEIGHT USE 8" WALLS AND BOTTOM SLAB. ADJUST QUANTITIES ACCORDINGLY.

CONSTRUCT WITH PIPE CROWNS MATCHING.

CHAMFER ALL EXPOSED CORNERS 1".

DRAWING NOT TO SCALE.

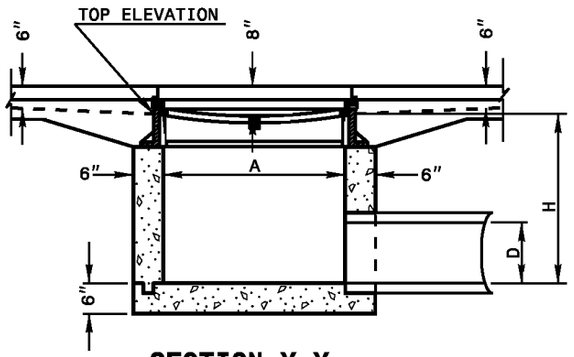

SECTION Y-Y

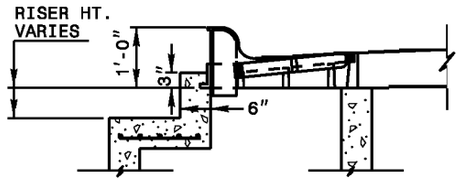

WHERE 30" TO 36" PIPE IS USED

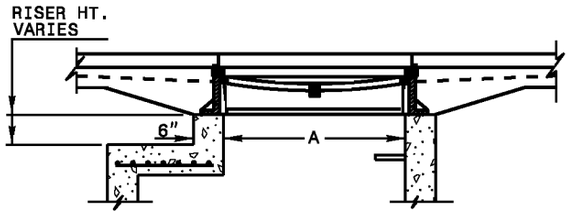

WHERE 42" TO 54" PIPE IS USED

DETAIL SHOWING METHOD OF RISER CONSTRUCTION

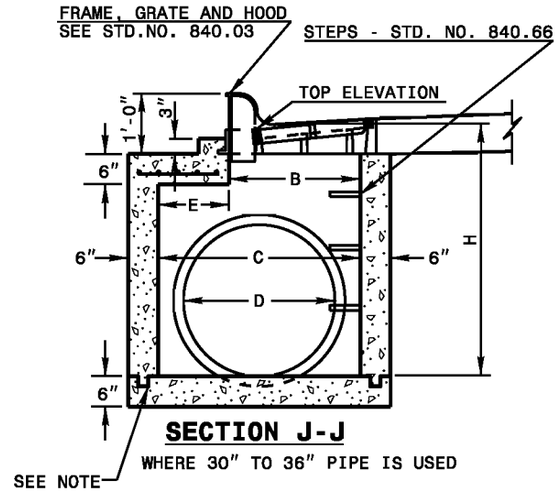

SECTION J-J

WHERE 30" TO 36" PIPE IS USED

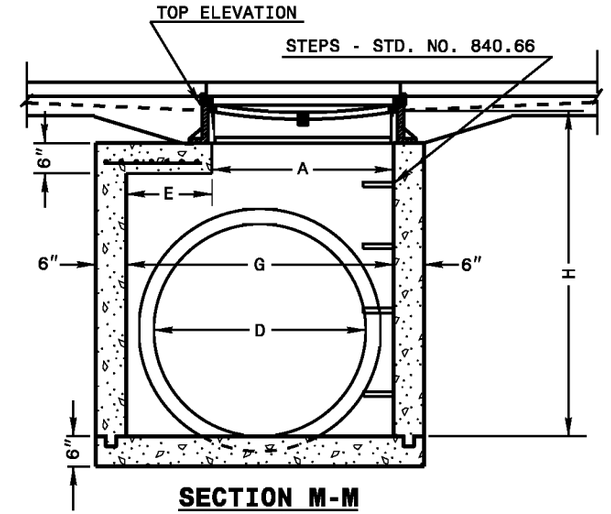

SECTION M-M

WHERE 42" TO 54" PIPE IS USED

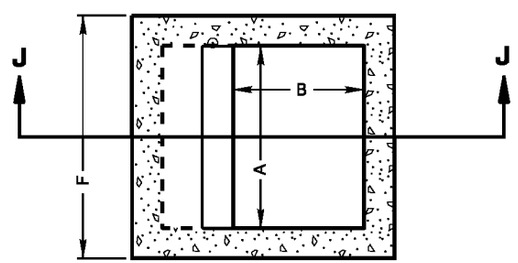

PLAN

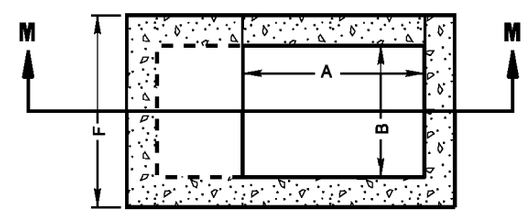

PLAN

STATE OF
NORTH CAROLINA
DEPT. OF TRANSPORTATION
DIVISION OF HIGHWAYS
RALEIGH, N.C.

1-12

ENGLISH STANDARD DRAWING FOR
CONCRETE CATCH BASIN
12" THRU 54" PIPE

SHEET 1 OF 2
840.02

STATE OF
NORTH CAROLINA
DEPT. OF TRANSPORTATION
DIVISION OF HIGHWAYS
RALEIGH, N.C.

1-12

ENGLISH STANDARD DRAWING FOR

CONCRETE CATCH BASIN

12" THRU 54" PIPE

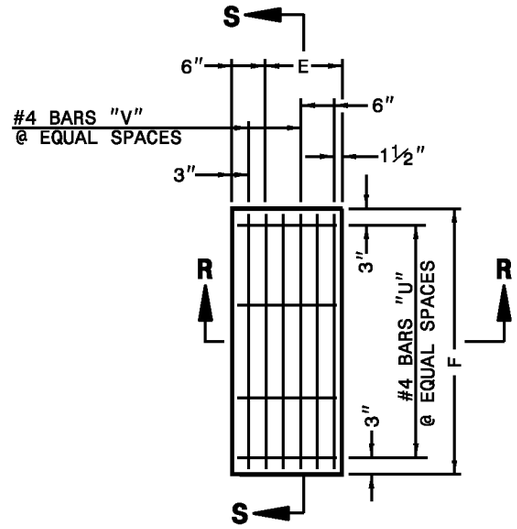

PLAN OF TOP SLAB

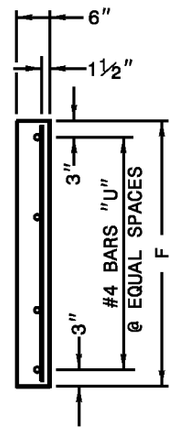

SECTION S-S

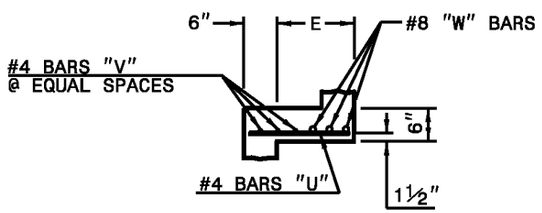

SECTION R-R

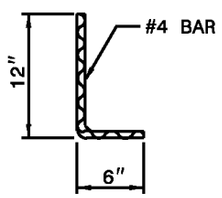

DOWEL

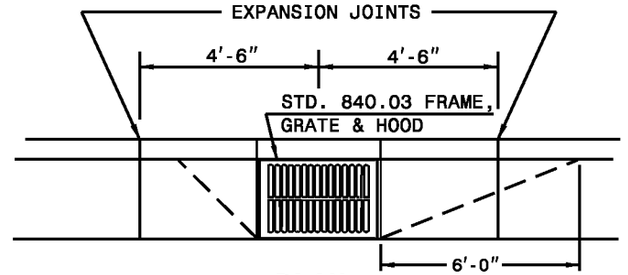

PLAN

CURB AND GUTTER WITH CATCH BASIN ON STEEP GRADES

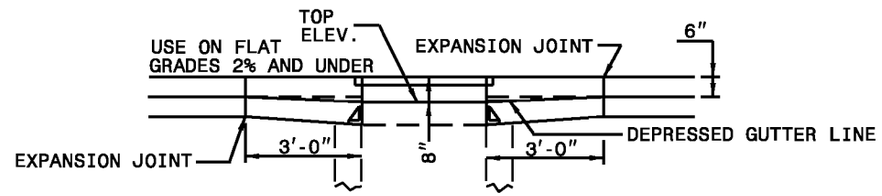

ELEVATION

NORMAL CURB AND GUTTER ON LIGHT GRADES

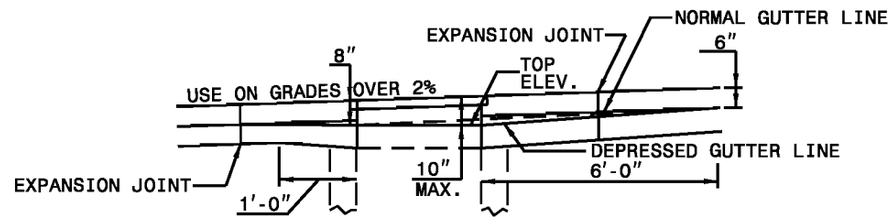

ELEVATION

NORMAL CURB AND GUTTER ON STEEP GRADES

MINIMUM DIMENSIONS AND QUANTITIES FOR CONCRETE CATCH BASIN(BASED ON MIN. HEIGHT, H, WITH NO RISER) *

DIMENSIONS OF BOX AND PIPE						COVER DIMENSION									CU.YDS. CONC. IN BOX			DEDUCTIONS ONE PIPE	
PIPE	SPAN	WIDTH	WIDTH	SPAN	MIN. HEIGHT			BARS-U		BARS-V		BARS-W		TOTAL LBS.	TOP SLAB	BOTTOM SLAB	TOT. CONC. FOR MINIMUM HEIGHT, H		
D	A	B	C	G	H	E	F	NO.	LENGTH	NO.	LENGTH	NO.	LENGTH					C.M.	R.C.
12"	3'-0"	2'-2"	--	--	2'-9"	--	--	--	--	--	--	--	--	--	--	0.235	0.772	0.015	0.026
15"	3'-0"	2'-2"			3'-0"											0.235	0.829	0.023	0.036
18"	3'-0"	2'-2"			3'-3"											0.235	0.887	0.033	0.049
24"	3'-0"	2'-2"			3'-9"											0.235	1.001	0.059	0.085
30"	3'-0"	2'-2"	3'-4"		4'-3"	1'-2"	4'-0"	4	1'-5"	2	3'-9"	3	3'-9"	39	0.123	0.321	1.433	0.092	0.127
36"	3'-0"	2'-2"	3'-10"		4'-9"	1'-8"	4'-0"	4	1'-11"	3	3'-9"	3	3'-9"	43	0.161	0.358	1.714	0.132	0.178
42"	3'-0"	2'-2"		4'-5"	5'-3"	1'-5"	3'-2"	4	1'-8"	2	2'-11"	3	2'-11"	32	0.112	0.318	1.738	0.180	0.243
48"	3'-0"	2'-2"		5'-0"	5'-9"	2'-0"	3'-2"	4	2'-3"	3	2'-11"	3	2'-11"	35	0.145	0.352	2.052	0.235	0.317
54"	3'-0"	2'-2"		5'-7"	6'-3"	2'-7"	3'-2"	4	2'-10"	5	2'-11"	3	2'-11"	41	0.180	0.386	2.387	0.297	0.401

* RISER HAS .228 CUBIC YARDS OF CONCRETE PER FOOT HEIGHT

STATE OF
NORTH CAROLINA
DEPT. OF TRANSPORTATION
DIVISION OF HIGHWAYS
RALEIGH, N.C.

1-12

ENGLISH STANDARD DRAWING FOR

CONCRETE CATCH BASIN

12" THRU 54" PIPE

STATE OF
NORTH CAROLINA
DEPT. OF TRANSPORTATION
DIVISION OF HIGHWAYS
RALEIGH, N.C.

1-12

ENGLISH STANDARD DRAWING FOR
FRAME, GRATES, AND HOOD
FOR USE ON STANDARD CATCH BASIN

SHEET 1 OF 2

840.03

NOTE: USE TYPE "E", "F" AND "G" GRATE UNLESS OTHERWISE NOTED.

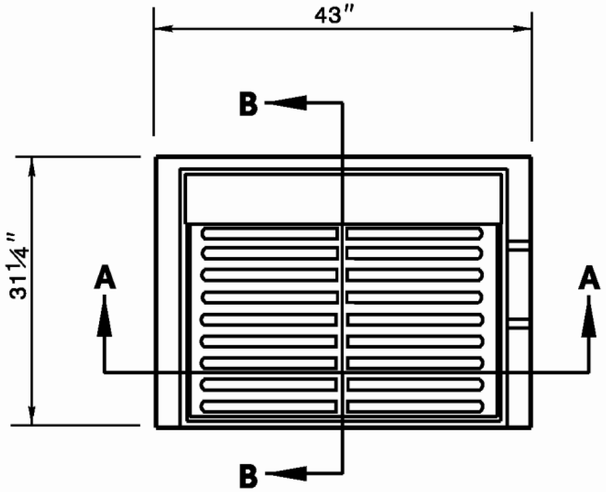

PLAN

FRAME, GRATE, & HOOD ASS'Y

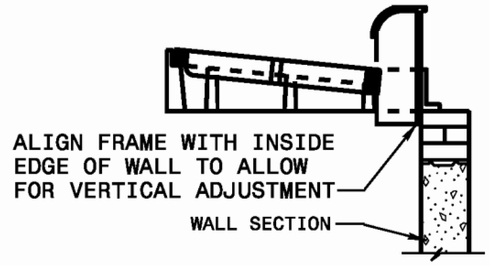

SECTION - BB

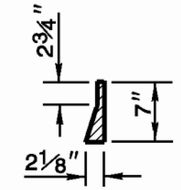

SECTION - LL

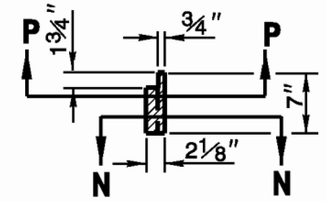

SECTION - MM

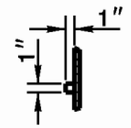

SECTION - PP

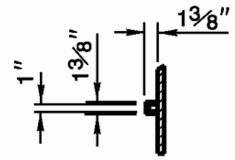

SECTION - NN

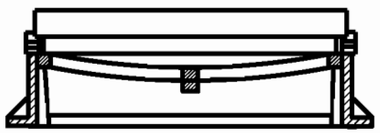

SECTION - AA

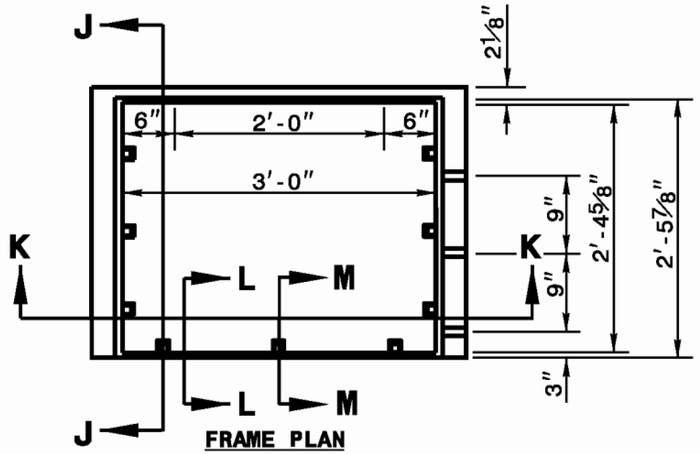

FRAME PLAN

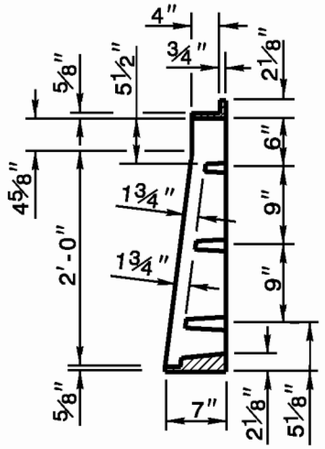

SECTION - JJ

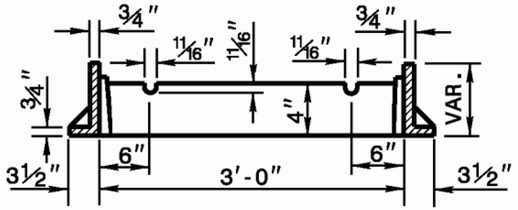

SECTION - KK

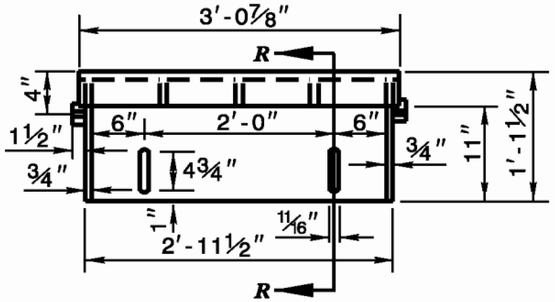

HOOD ELEVATION

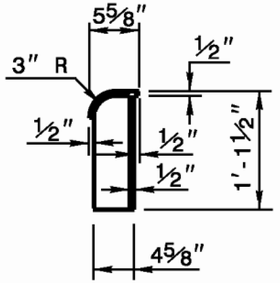

SECTION - RR

STATE OF
NORTH CAROLINA
DEPT. OF TRANSPORTATION
DIVISION OF HIGHWAYS
RALEIGH, N.C.

1-12

ENGLISH STANDARD DRAWING FOR
FRAME, GRATES, AND HOOD
FOR USE ON STANDARD CATCH BASIN

SHEET 1 OF 2

840.03

STATE OF
NORTH CAROLINA
DEPT. OF TRANSPORTATION
DIVISION OF HIGHWAYS
RALEIGH, N.C.

1-12

ENGLISH STANDARD DRAWING FOR
FRAME, GRATES, AND HOOD
FOR USE ON STANDARD CATCH BASIN

SHEET 2 OF 2

840.03

DETAIL SHOWING TYPES OF GRATES
USE ACCORDING TO WATER FLOW.

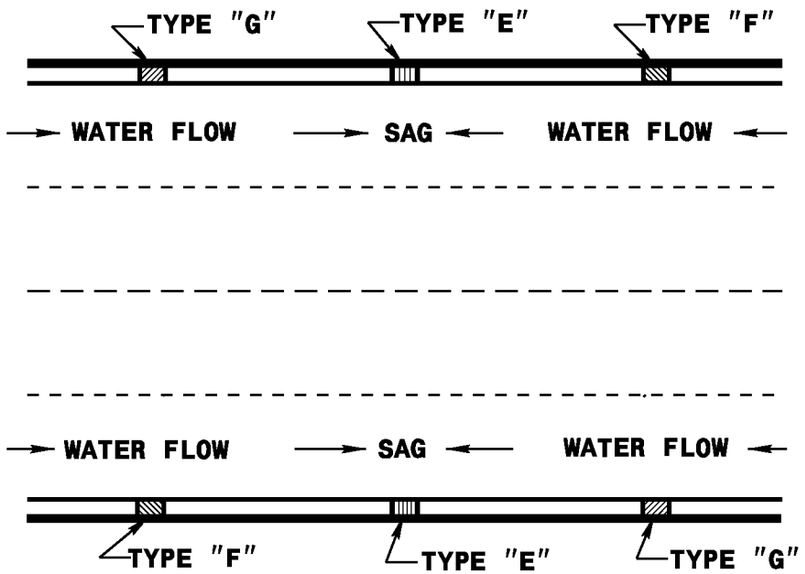

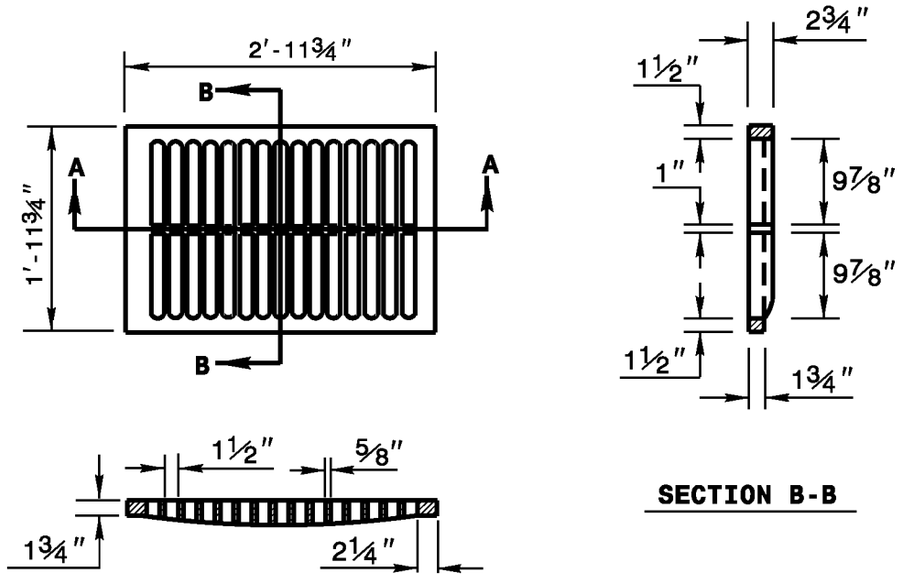

TYPE - E

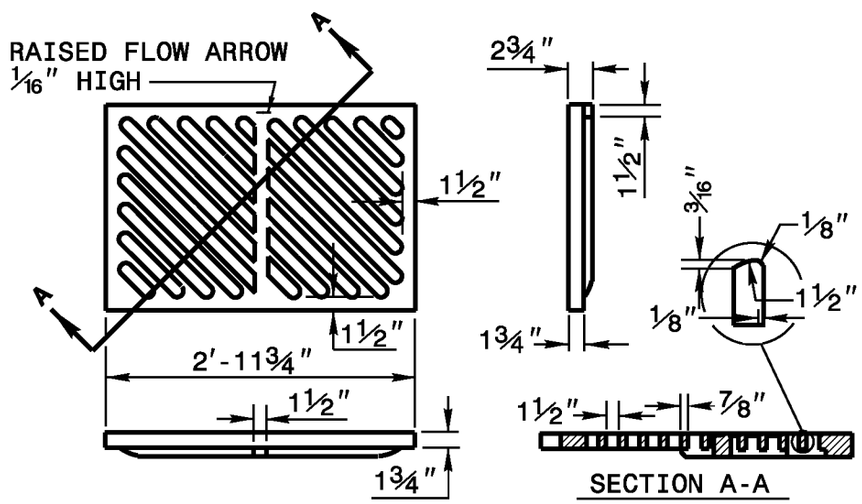

TYPE - F

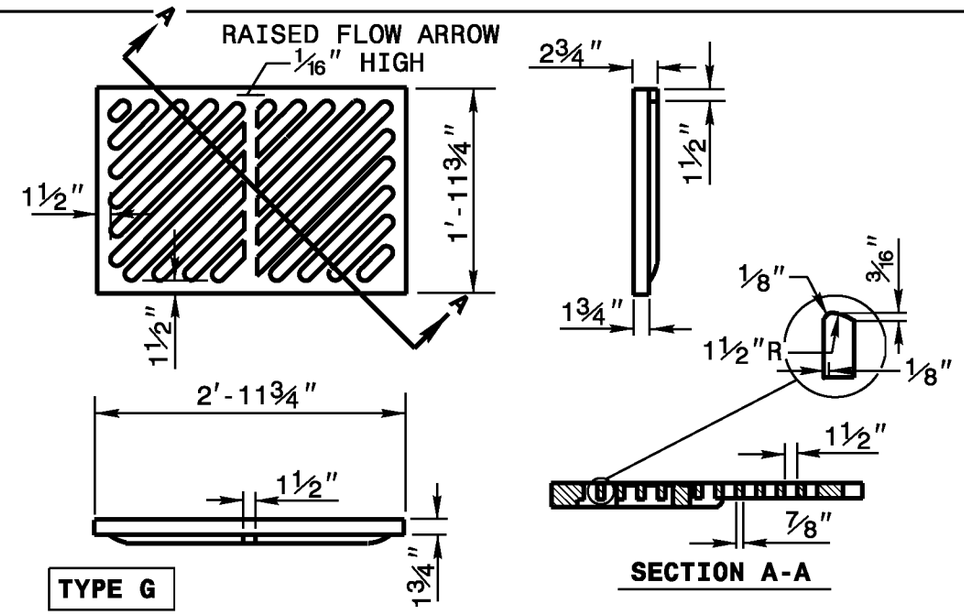

TYPE G

STATE OF
NORTH CAROLINA
DEPT. OF TRANSPORTATION
DIVISION OF HIGHWAYS
RALEIGH, N.C.

1-12

ENGLISH STANDARD DRAWING FOR
FRAME, GRATES, AND HOOD
FOR USE ON STANDARD CATCH BASIN

SHEET 2 OF 2

840.03

STATE OF NORTH CAROLINA
DEPT. OF TRANSPORTATION
DIVISION OF HIGHWAYS
RALEIGH, N.C.

1-12

ENGLISH STANDARD DRAWING FOR

CONCRETE OPEN THROAT CATCH BASIN

12" THRU 48" PIPE

SHEET 1 OF 2

840.04

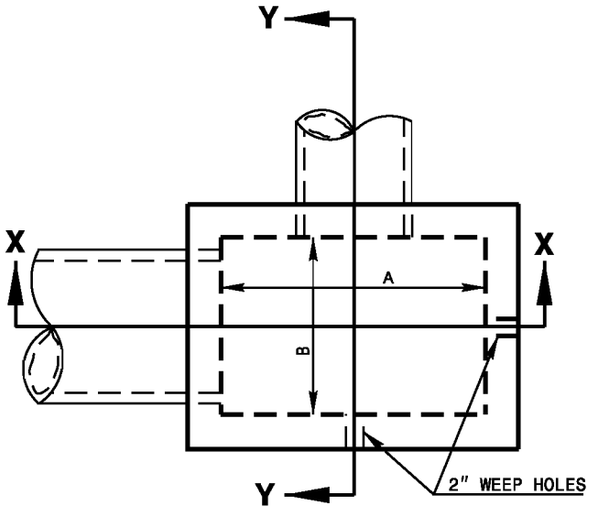

PLAN

NOTES: USE CLASS "B" CONCRETE THROUGHOUT.

PROVIDE ALL CATCH BASINS OVER 3'-6" IN DEPTH WITH STEPS 12" ON CENTER. USE STEPS WHICH COMPLY WITH STD. DRAWING 840.66.

OPTIONAL CONSTRUCTION - MONOLITHIC POUR, 2" KEYWAY, OR #4 BAR DOWELS AT 12" CENTERS AS DIRECTED BY THE ENGINEER.

USE FORMS FOR THE CONSTRUCTION OF THE BOTTOM SLAB.

IF REINFORCED CONCRETE PIPE IS SET IN BOTTOM SLAB OF BOX, ADD TO SLAB AS SHOWN ON STD. NO. 840.00.

FOR 8'-0" IN HEIGHT OR LESS USE 6" WALLS AND BOTTOM SLAB. OVER 8'-0" TO 16'-0" IN HEIGHT USE 8" WALLS AND BOTTOM SLAB. ADJUST QUANTITIES ACCORDINGLY.

CONSTRUCT WITH PIPE CROWNS MATCHING.

INSTALL 2" WEEPHOLES AS DIRECTED BY THE ENGINEER.

INSTALL STONE DRAINS, OF A MINIMUM OF 1 CUBIC FOOT OF NO. 78M STONE IN A POROUS FABRIC BAG OR WRAP, AT EACH WEEP HOLE OR AS DIRECTED BY THE ENGINEER.

CHAMFER ALL EXPOSED CORNERS 1".

DRAWING NOT TO SCALE.

* INCREASE THE SIZE OF THE 6" OPENING TO 8" MAX., AS DIRECTED BY THE ENGINEER BY ADDING 2" TO THE WALL HIEGHT ABOVE THE TOP ELEVATION. ADJUST QUANTITIES ACCORDINGLY.

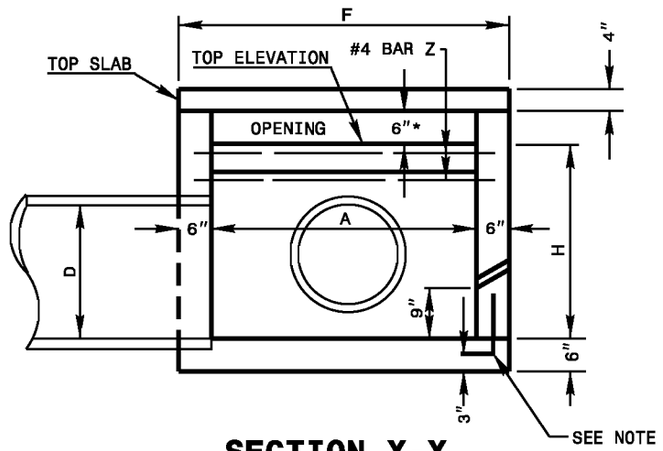

SECTION X-X

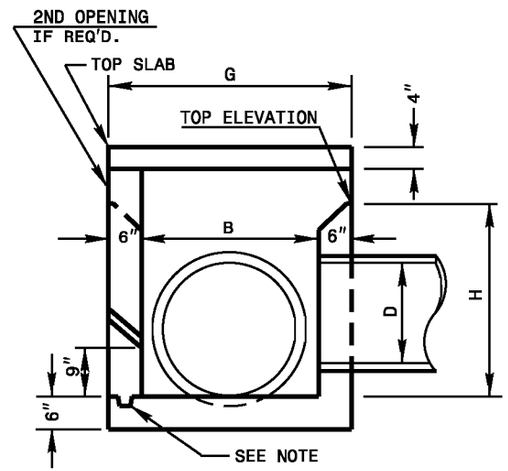

SECTION Y-Y

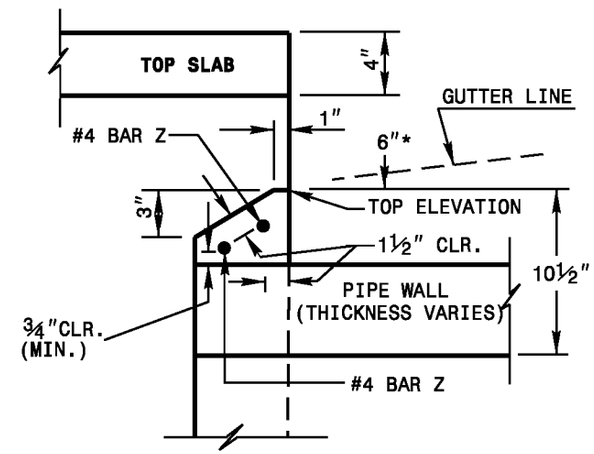

PART SECTION Y-Y

SHOWING DETAILS AT OPENING

MIN. DIMENSIONS AND QUANTITIES FOR CONCRETE CATCH BASIN (BASED ON MIN. HEIGHT, H)

DIM'S OF BOX & PIPE				REINFORCING						TOP & BOT. SLAB DIMENSIONS		CU. YDS. CONC. IN BOX			TOTAL QUANTITIES BOX & SLABS		DEDUCTION ONE PIPE		DED. ONE 6" THROAT OPENING
PIPE	SPAN	WIDTH	HEIGHT	BARS - X		BARS - Y		BARS - Z											
D	A	B	H	NO.	LENGTH	NO.	LENGTH	NO.	LENGTH	F	G	TOP SLAB	BOT. SLAB	WALL/FT. HT.	LBS. REINF.	YD^3 (MIN H)	C.S.	R.C.	YD^3
12"	3'-6"	2'-3"	1'-10"	4	3'-0"	6	4'-3"	2	4'-3"	4'-6"	3'-3"	0.181	0.271	0.250	27	1.046	0.015	0.032	0.046
15"	3'-6"	2'-3"	2'-1"	4	3'-0"	6	4'-3"	2	4'-3"	4'-6"	3'-3"	0.181	0.271	0.250	27	1.108	0.023	0.036	0.046
18"	4'-0"	2'-8"	2'-4"	5	3'-5"	7	4'-9"	2	4'-9"	5'-0"	3'-8"	0.226	0.340	0.284	35	1.379	0.033	0.049	0.053
24"	4'-0"	2'-8"	2'-10"	5	3'-5"	7	4'-9"	2	4'-9"	5'-0"	3'-8"	0.226	0.340	0.284	35	1.521	0.059	0.085	0.053
30"	4'-0"	3'-6"	3'-4"	5	4'-3"	9	4'-9"	2	4'-9"	5'-0"	4'-6"	0.278	0.417	0.315	43	1.916	0.092	0.127	0.053
36"	4'-6"	4'-0"	3'-10"	5	4'-9"	10	5'-3"	2	5'-3"	5'-6"	5'-0"	0.340	0.510	0.352	51	2.390	0.132	0.178	0.059
42"	5'-0"	4'-6"	4'-4"	5	5'-3"	12	5'-9"	2	5'-9"	6'-0"	5'-6"	0.407	0.611	0.389	64	2.914	0.180	0.243	0.066
48"	5'-0"	5'-0"	4'-10"	5	5'-9"	13	5'-9"	2	5'-9"	6'-0"	6'-0"	0.444	0.666	0.407	68	3.298	0.235	0.317	0.066

STATE OF NORTH CAROLINA
DEPT. OF TRANSPORTATION
DIVISION OF HIGHWAYS
RALEIGH, N.C.

1-12

ENGLISH STANDARD DRAWING FOR

CONCRETE OPEN THROAT CATCH BASIN

12" THRU 48" PIPE

SHEET 1 OF 2

840.04

STATE OF
NORTH CAROLINA
DEPT. OF TRANSPORTATION
DIVISION OF HIGHWAYS
RALEIGH, N.C.

1-12

ENGLISH STANDARD DRAWING FOR

CONCRETE OPEN THROAT CATCH BASIN

12" THRU 48" PIPE

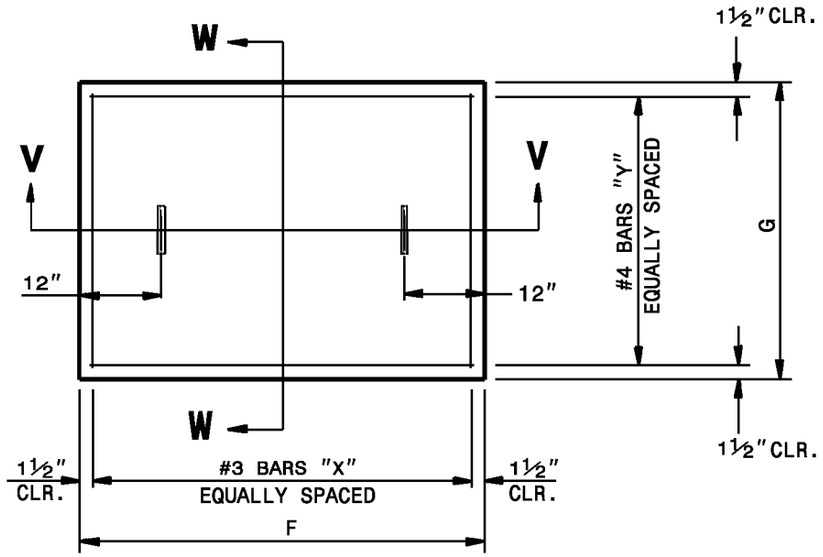

PLAN

PRECAST OR CAST IN PLACE TOP SLAB

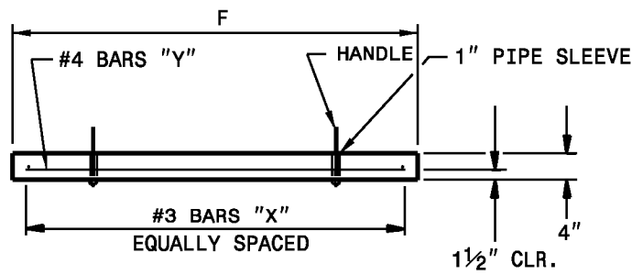

SECTION V-V

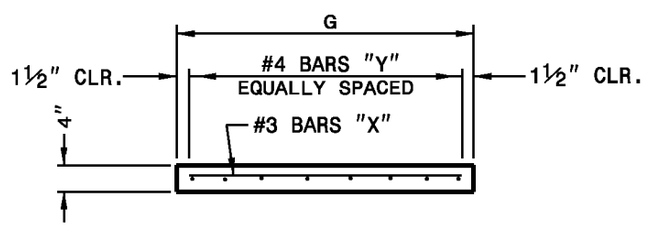

SECTION W-W

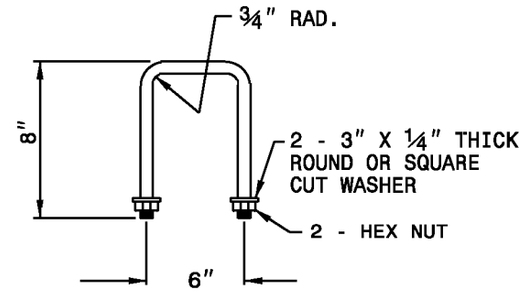

DETAIL OF HANDLE

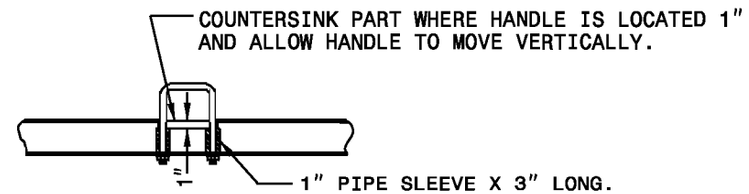

PART SECTION

THRU COVER SHOWING HANDLE

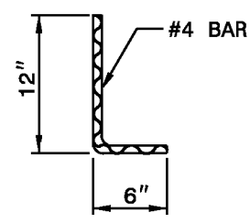

DOWEL

SHEET 2 OF 2

840.04

STATE OF
NORTH CAROLINA
DEPT. OF TRANSPORTATION
DIVISION OF HIGHWAYS
RALEIGH, N.C.

1-12

ENGLISH STANDARD DRAWING FOR

CONCRETE OPEN THROAT CATCH BASIN

12" THRU 48" PIPE

SHEET 2 OF 2

840.04

STATE OF
NORTH CAROLINA
DEPT. OF TRANSPORTATION
DIVISION OF HIGHWAYS
RALEIGH, N.C.

1-12

ENGLISH STANDARD DRAWING FOR

BRICK OPEN THROAT CATCH BASIN

12" THRU 48" PIPE

SHEET 1 OF 2

840.05

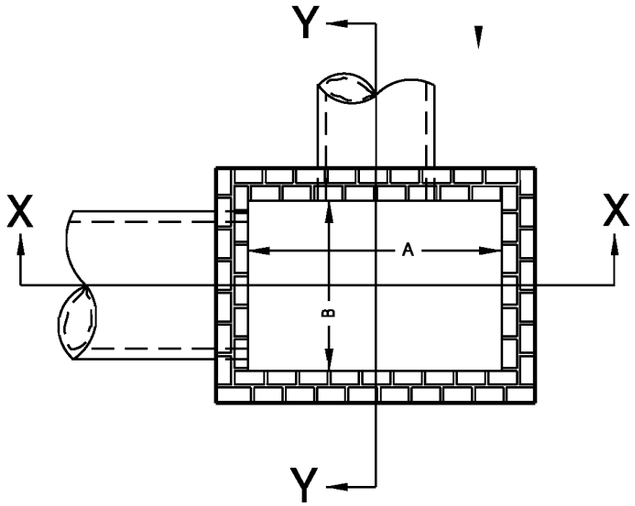

PLAN

NOTES:
- MORTAR JOINTS ½" +/- ⅛" THICK.
- USE CLASS "B" CONCRETE THROUGHOUT.
- USE FORMS FOR CONSTRUCTION OF THE BOTTOM SLAB.
- USE #4 BAR DOWELS AT 12" CENTERS.
- DEDUCT FOR PIPE(S) FROM TOTAL CU. YDS. OF BRICK MASONRY.
- PROVIDE ALL CATCH BASINS OVER 3'-6" IN DEPTH WITH STEPS 12" ON CENTER. USE STEPS WHICH COMPLY WITH STD. DRAWING 840.66.
- CONCAVE TOOL ALL EXPOSED MORTAR JOINTS.
- USE BRICK OR CONCRETE BLOCK WHICH COMPLIES WITH THE REQUIREMENTS OF SECTION 840 OF THE STANDARD SPECIFICATIONS.
- IF REINFORCED CONCRETE PIPE IS SET IN BOTTOM SLAB OF BOX, ADD TO SLAB AS SHOWN ON STD. NO. 840.00.
- FOR 8'-0" IN HEIGHT OR LESS USE 6" WALLS AND BOTTOM SLAB. OVER 8'-0" TO 16'-0" IN HEIGHT USE 8" WALLS AND BOTTOM SLAB. ADJUST QUANTITIES ACCORDINGLY.
- CONSTRUCT WITH PIPE CROWNS MATCHING.
- CHAMFER ALL EXPOSED CORNERS 1".
- DRAWING NOT TO SCALE.

* INCREASE THE SIZE OF THE 6" OPENING TO 8" MAX., AS DIRECTED BY THE ENGINEER BY ADDING 2" TO THE WALL HIEGHT ABOVE THE TOP ELEVATION. ADJUST QUANTITIES ACCORDINGLY.

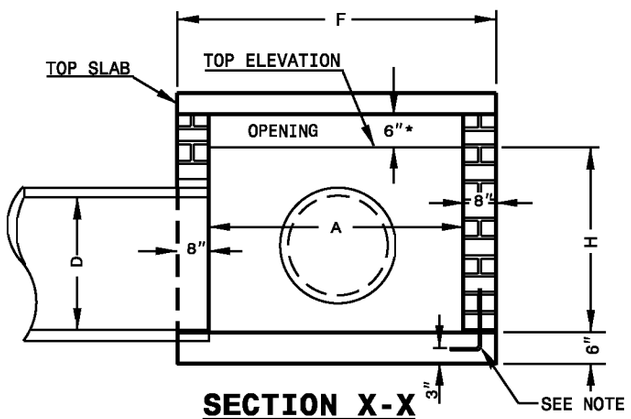

SECTION X-X

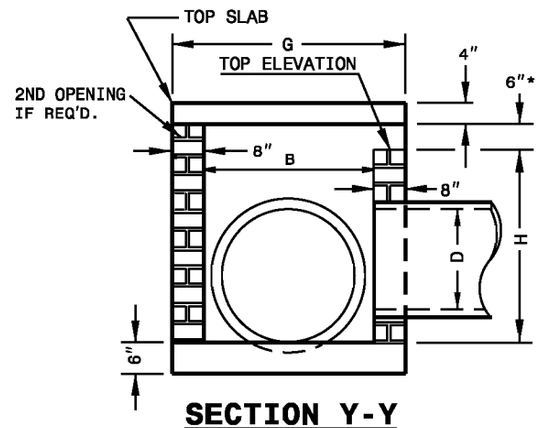

SECTION Y-Y

MIN. DIMENSIONS AND QUANTITIES FOR CATCH BASIN (BASED ON MIN. HEIGHT, H)

DIM'S OF BOX & PIPE				REINFORCING					SLAB DIMENSIONS		CU. YDS. CONC. IN BOX			TOTAL BRICK MASONRY		DEDUCTION ONE PIPE		DED. ONE 6" THROAT OPENING
PIPE	SPAN	WIDTH	HEIGHT	BARS - X		BARS - Y		TOTAL										
D	A	B	H	NO.	LENGTH	NO.	LENGTH	LBS	F	G	TOP SLAB	BOT. SLAB	TOTAL	PER FT. HT.	TOT. FOR H	C.S.	R.C.	CU.YDS.
12"	3'-6"	2'-3"	1'-10"	5	3'-4"	7	4'-7"	28	4'-10"	3'-7"	0.214	0.321	0.535	0.350	0.656	0.020	0.037	0.043
15"	3'-6"	2'-3"	2'-1"	5	3'-4"	7	4'-7"	28	4'-10"	3'-7"	0.214	0.321	0.535	0.350	0.744	0.031	0.059	0.043
18"	4'-0"	2'-8"	2'-4"	6	3'-9"	8	5'-1"	36	5'-4"	4'-0"	0.263	0.395	0.658	0.395	0.938	0.044	0.081	0.049
24"	4'-0"	2'-8"	2'-10"	6	3'-9"	8	5'-1"	36	5'-4"	4'-0"	0.263	0.395	0.658	0.395	1.136	0.078	0.134	0.049
30"	4'-0"	3'-6"	3'-4"	6	4'-7"	10	5'-1"	44	5'-4"	4'-10"	0.318	0.477	0.795	0.436	1.472	0.122	0.199	0.049
36"	4'-6"	4'-0"	3'-10"	6	5'-1"	11	5'-7"	52	5'-10"	5'-4"	0.384	0.576	0.960	0.485	1.879	0.176	0.278	0.056
42"	5'-0"	4'-6"	4'-4"	6	5'-7"	13	6'-1"	65	6'-4"	5'-10"	0.456	0.684	1.140	0.535	2.340	0.240	0.371	0.062
48"	5'-0"	5'-0"	4'-10"	6	6'-1"	14	6'-1"	71	6'-4"	6'-4"	0.495	0.743	1.238	0.559	2.725	0.313	0.476	0.062

STATE OF
NORTH CAROLINA
DEPT. OF TRANSPORTATION
DIVISION OF HIGHWAYS
RALEIGH, N.C.

1-12

ENGLISH STANDARD DRAWING FOR

BRICK OPEN THROAT CATCH BASIN

12" THRU 48" PIPE

SHEET 1 OF 2

840.05

STATE OF
NORTH CAROLINA
DEPT. OF TRANSPORTATION
DIVISION OF HIGHWAYS
RALEIGH, N.C.

1-12

ENGLISH STANDARD DRAWING FOR

BRICK CATCH BASIN WITH

SINGLE AND MULTIPLE PIPES

12" THRU 48" PIPE

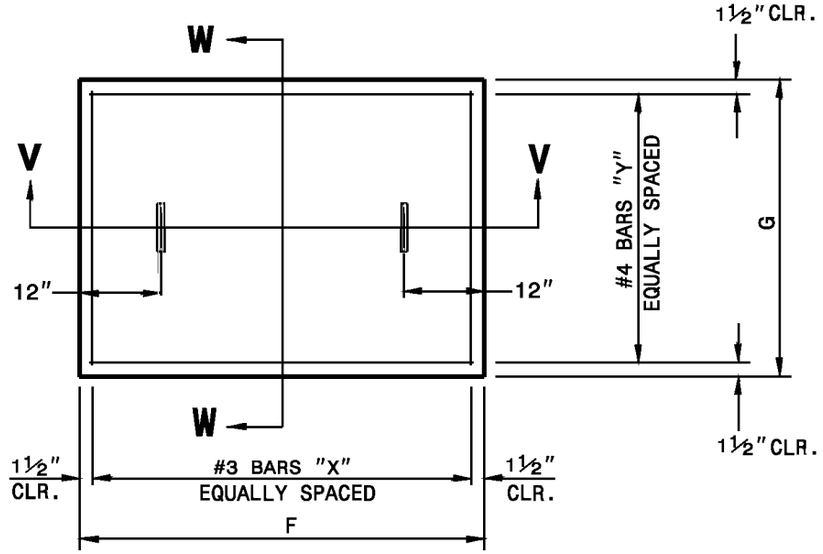

PLAN

PRECAST OR CAST IN PLACE TOP SLAB

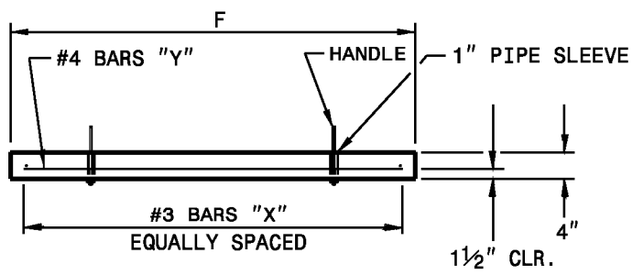

SECTION V-V

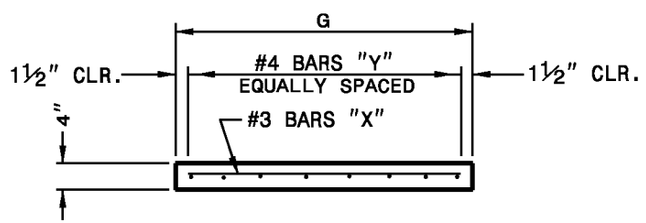

SECTION W-W

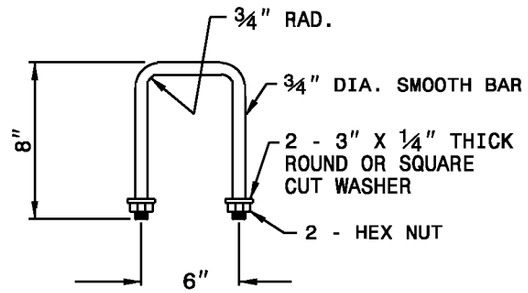

DETAIL OF HANDLE

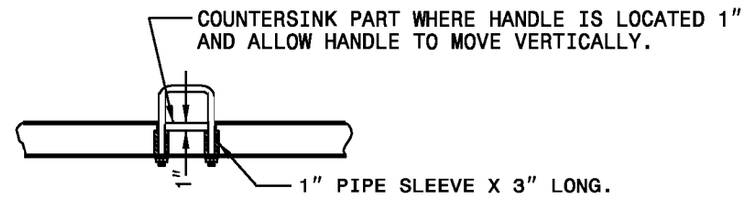

PART SECTION

THRU COVER SHOWING HANDLE

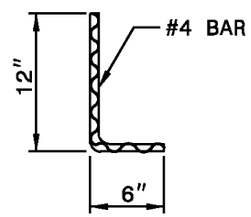

DOWEL

SHEET 2 OF 2

840.05

1-12

STATE OF
NORTH CAROLINA
DEPT. OF TRANSPORTATION
DIVISION OF HIGHWAYS
RALEIGH, N.C.

ENGLISH STANDARD DRAWING FOR

BRICK CATCH BASIN WITH

SINGLE AND MULTIPLE PIPES

12" THRU 48" PIPE

SHEET 2 OF 2

840.05

STATE OF
NORTH CAROLINA
DEPT. OF TRANSPORTATION
DIVISION OF HIGHWAYS
RALEIGH, N.C.

1-12

ENGLISH STANDARD DRAWING FOR

CONCRETE BRIDGE APPROACH DROP INLET

12" THRU 24" PIPE

SHEET 1 OF 1

840.13

GENERAL NOTES:

USE CLASS "B" CONCRETE THROUGHOUT.

PROVIDE ALL DROP INLETS OVER 3'-6" IN DEPTH WITH STEPS 12" ON CENTER. USE STEPS WHICH COMPLY WITH STD. DRAWING 840.66.

OPTIONAL CONSTRUCTION - MONOLITHIC POUR, 2" KEYWAY, OR #4 BAR DOWELS AT 12" CENTERS AS DIRECTED BY THE ENGINEER.

USE FORMS FOR THE CONSTRUCTION OF THE BOTTOM SLAB.

IF REINFORCED CONCRETE PIPE IS SET IN BOTTOM SLAB OF BOX, ADD TO SLAB AS SHOWN ON STD. NO. 840.00.

#4 BAR DOWELS "B" AT 12" CENTERS.

MAX. DEPTH OF THIS STRUCTURE FROM TOP OF BOTTOM SLAB TO TOP ELEVATION IS 12 FEET.

FOR LOCATIONS OF DROP INLET, SEE BRIDGE APPROACH SLABS IN THE STRUCTURE PLANS.

CONSTRUCT WITH PIPE CROWNS MATCHING.

DRAWING NOT TO SCALE.

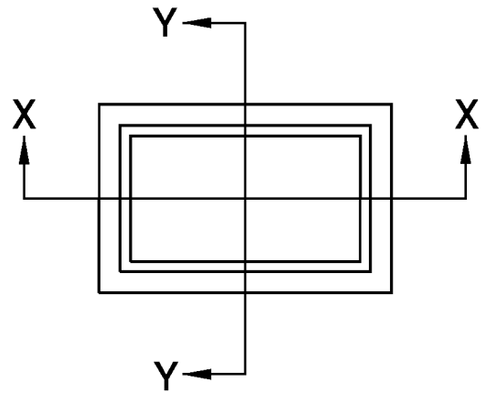

PLAN

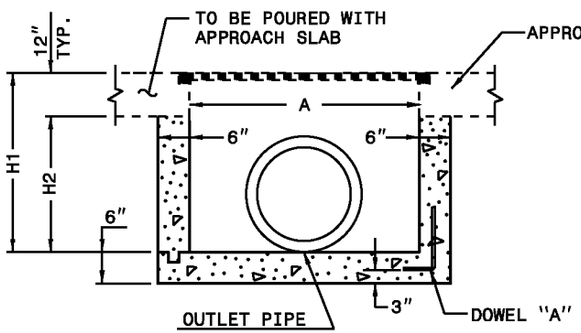

SECTION X-X

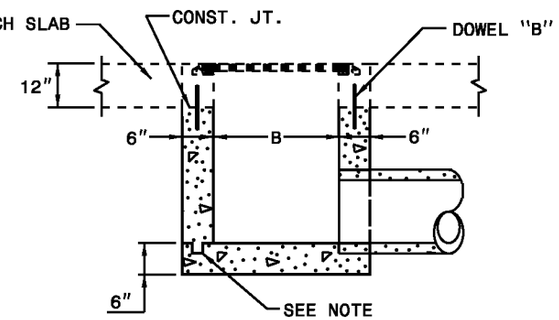

SECTION Y-Y

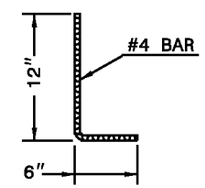

DOWEL "A"

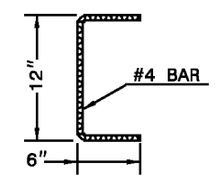

DOWEL "B"

MINIMUM DIMENSIONS AND QUANTITIES FOR CONCRETE DROP INLET

PIPE	SPAN	WIDTH	HEIGHT	HEIGHT	CUBIC YARDS OF CONCRETE IN BOX				DEDUCTIONS FOR ONE PIPE	
D	A	B	H1	H2	BOTTOM SLAB	H PER FT. HT.	H MIN. TOTAL	TOTAL	C.S.	R.C.
12"	3'-8"	2'-0"	2'-6"	1'-6"	0.259	0.247	0.597	0.856	0.020	0.032
15"	3'-8"	2'-0"	2'-9"	1'-9"	0.259	0.247	0.659	0.918	0.023	0.036
18"	3'-8"	2'-0"	3'-0"	2'-0"	0.259	0.247	0.720	0.979	0.033	0.049
24"	3'-8"	2'-0"	3'-6"	2'-6"	0.259	0.247	0.865	1.124	0.059	0.085

STATE OF
NORTH CAROLINA
DEPT. OF TRANSPORTATION
DIVISION OF HIGHWAYS
RALEIGH, N.C.

1-12

ENGLISH STANDARD DRAWING FOR

CONCRETE BRIDGE APPROACH DROP INLET

12" THRU 24" PIPE

SHEET 1 OF 1

840.13

STATE OF
NORTH CAROLINA
DEPT. OF TRANSPORTATION
DIVISION OF HIGHWAYS
RALEIGH, N.C.

1-12

ENGLISH STANDARD DRAWING FOR

CONCRETE DROP INLET

12" THRU 30" PIPE

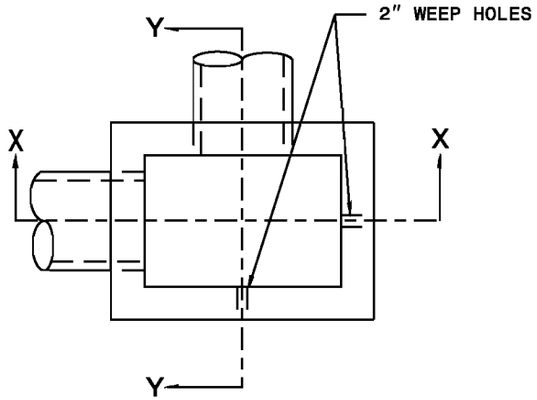

PLAN

WITH GRATE & FRAME REMOVED

GENERAL NOTES:

USE CLASS "B" CONCRETE THROUGHOUT.

PROVIDE ALL DROP INLETS OVER 3'-6" IN DEPTH WITH STEPS 12" ON CENTER. USE STEPS WHICH COMPLY WITH STD. DRAWING 840.66.

OPTIONAL CONSTRUCTION - MONOLITHIC POUR 2" KEYWAY OR #4 BAR DOWELS AT 12" CENTERS AS DIRECTED BY THE ENGINEER.

USE FORMS FOR THE CONSTRUCTION OF THE BOTTOM SLAB.

IF REINFORCED CONCRETE PIPE IS SET IN BOTTOM SLAB OF BOX, ADD TO SLAB AS SHOWN ON STD. NO. 840.00.

CONSTRUCT WITH PIPE CROWNS MATCHING.

SEE STANDARD DRAWING 840.25 FOR ATTACHMENT OF FRAMES AND GRATES NOT SHOWN.

INSTALL 2" WEEPHOLES AS DIRECTED BY THE ENGINEER.

INSTALL STONE DRAINS, OF A MINIMUM OF 1 CUBIC FOOT OF NO. 78M STONE IN A POROUS FABRIC BAG OR WRAP, AT EACH WEEP HOLE OR AS DIRECTED BY THE ENGINEER.

CHAMFER ALL EXPOSED CORNERS 1".

DRAWING NOT TO SCALE.

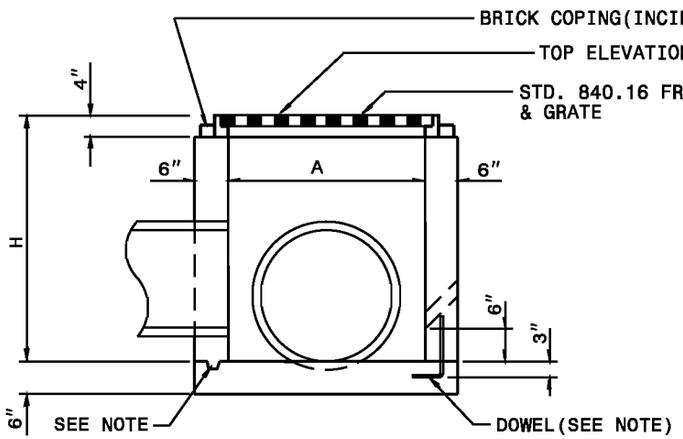

SECTION X-X

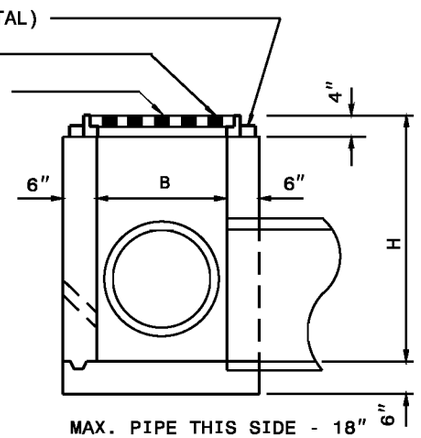

SECTION Y-Y

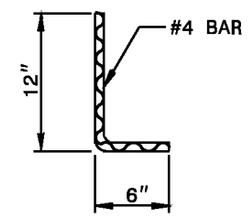

DOWEL

DIMENSIONS AND QUANTITIES FOR DROP INLET(BASED ON MIN. HEIGHT, H)								
DIMENSIONS OF BOX & PIPE				CUBIC YARDS CONC. IN BOX			DEDUCTIONS FOR ONE PIPE	
PIPE	SPAN	WIDTH	MIN. HEIGHT					
D	A	B	H	BOTTOM SLAB	WALL PER FT. HT.	TOTAL CONCRETE FOR MINIMUM HEIGHT, H	C.M.	R.C.
12"	3'-0"	2'-0"	2'-0"	0.222	0.222	0.592	0.015	0.026
15"	↗	↗	2'-3"	↗	↗	0.648	0.023	0.036
18"	↗	↗	2'-6"	↗	↗	0.703	0.033	0.049
24"	↗	↗	3'-0"	↗	↗	0.814	0.059	0.085
30"	3'-0"	2'-0"	3'-6"	0.222	0.222	0.925	0.092	0.127

SHEET 1 OF 1

840.14

STATE OF
NORTH CAROLINA
DEPT. OF TRANSPORTATION
DIVISION OF HIGHWAYS
RALEIGH, N.C.

1-12

ENGLISH STANDARD DRAWING FOR

CONCRETE DROP INLET

12" THRU 30" PIPE

SHEET 1 OF 1

840.14

STATE OF
NORTH CAROLINA
DEPT. OF TRANSPORTATION
DIVISION OF HIGHWAYS
RALEIGH, N.C.

1-12

ENGLISH STANDARD DRAWING FOR

BRICK DROP INLET

12" THRU 30" PIPE

SHEET 1 OF 1

840.15

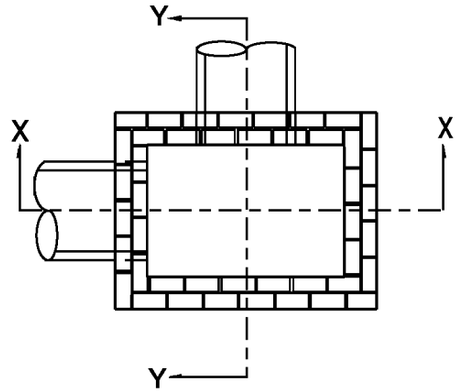

PLAN

WITH COPING REMOVED

GENERAL NOTES:

MORTAR JOINTS ½" +/- ⅛" THICK.

USE CLASS "B" CONCRETE THROUGHOUT.

USE FORMS FOR CONSTRUCTION OF THE BOTTOM SLAB.

USE #4 BAR DOWELS AT 12" CENTERS.

DEDUCT FOR PIPE(S) FROM TOTAL CU. YDS. OF BRICK MASONRY.

PROVIDE ALL CATCH BASINS OVER 3'-6" IN DEPTH WITH STEPS 12" ON CENTER. USE STEPS WHICH COMPLY WITH STD. DRAWING 840.66.

USE BRICK OR CONCRETE BLOCK WHICH COMPLIES WITH THE REQUIREMENTS OF SECTION 840 OF THE STANDARD SPECIFICATIONS.

IF REINFORCED CONCRETE PIPE IS SET IN BOTTOM SLAB OF BOX, ADD TO SLAB AS SHOWN ON STD. NO. 840.00.

FOR 8'-0" IN HEIGHT OR LESS, USE 8" WALL. OVER 8'-0" IN HEIGHT, USE 12" WALL TO 6'-0" FROM TOP OF WALL AND 8" WALL FOR THE REMAINING 6'-0". QUANTITES TO BE ADJUSTED ACCORDINGLY.

CONSTRUCT WITH PIPE CROWNS MATCHING.

SEE STANDARD DRAWING 840.25 FOR ATTACHMENT OF FRAMES AND GRATES.

DO NOT USE BRICK MASONRY DROP INLET IN LOCATIONS SUBJECT TO TRAFFIC.

CHAMFER ALL EXPOSED CORNERS 1".

DRAWING NOT TO SCALE.

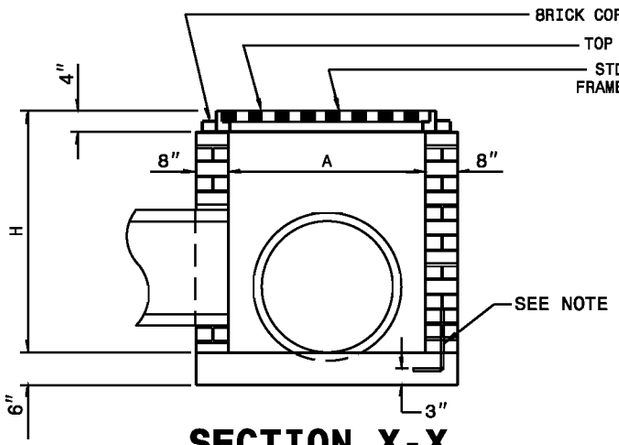

SECTION X-X

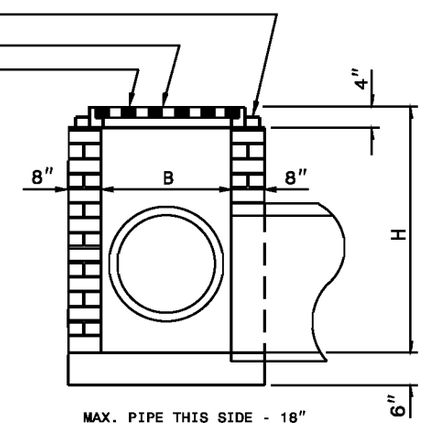

SECTION Y-Y

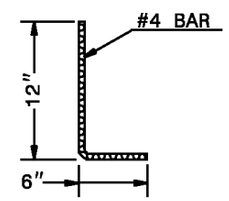

DOWEL

DIMENSIONS AND QUANTITIES FOR DROP INLET(BASED ON MIN. HEIGHT, H)								
DIMENSIONS OF BOX & PIPE				CUBIC YARDS CONCRETE	CUBIC YARDS BRICK MASONRY		DEDUCTIONS FOR ONE PIPE	
PIPE	SPAN	WIDTH	MIN. HEIGHT					
D	A	B	H	BOTTOM SLAB	WALL PER FOOT HT.	TOTAL BRICK MASONRY FOR MIN. HEIGHT, H	C.S.	R.C.
12"	3'-0"	2'-0"	2'-0"	0.268	0.313	0.522	0.020	0.032
15"			2'-3"	0.268	0.313	0.600	0.031	0.047
18"			2'-6"	0.268	0.313	0.678	0.044	0.065
24"			3'-0"	0.268	0.313	0.835	0.078	0.113
30"	3'-0"	2'-0"	3'-6"	0.268	0.313	0.991	0.122	0.170

STATE OF
NORTH CAROLINA
DEPT. OF TRANSPORTATION
DIVISION OF HIGHWAYS
RALEIGH, N.C.

1-12

ENGLISH STANDARD DRAWING FOR

BRICK DROP INLET

12" THRU 30" PIPE

SHEET 1 OF 1

840.15

STATE OF
NORTH CAROLINA
DEPT. OF TRANSPORTATION
DIVISION OF HIGHWAYS
RALEIGH, N.C.

1-12

ENGLISH STANDARD DRAWING FOR

DROP INLET FRAME AND GRATES

FOR USE WITH STD. DWG.S 840.14 AND 840.15

SHEET 1 OF 1

840.16

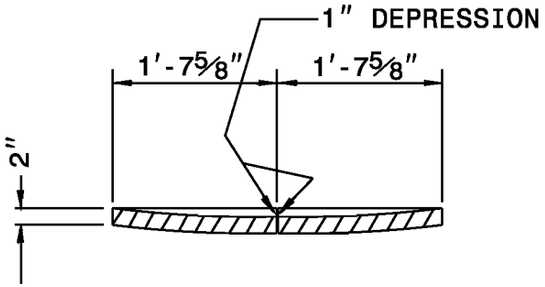

SECTION G-G

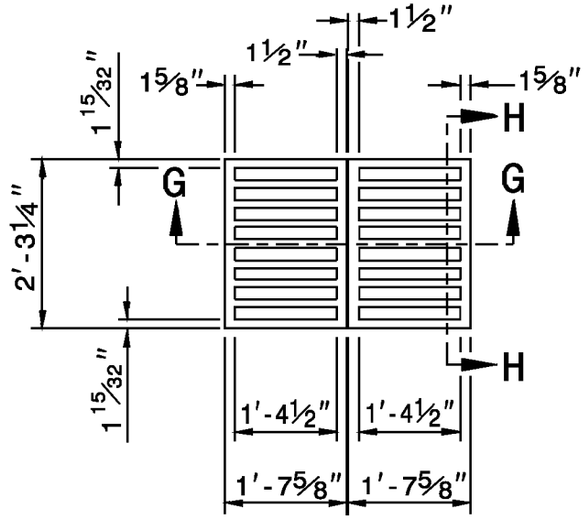

PLAN OF GRATING

CAST IRON

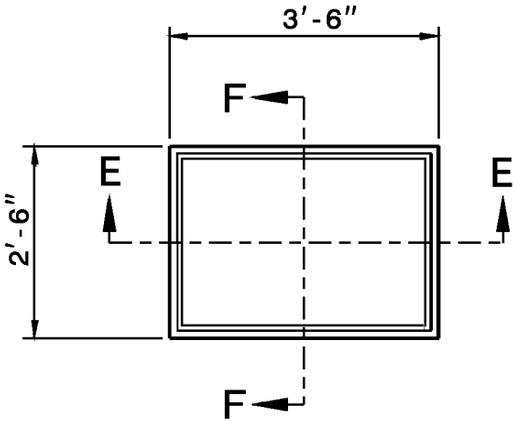

PLAN OF FRAME

CAST IRON

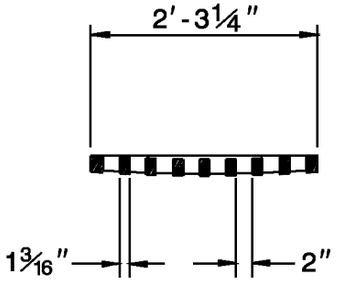

SECTION H-H

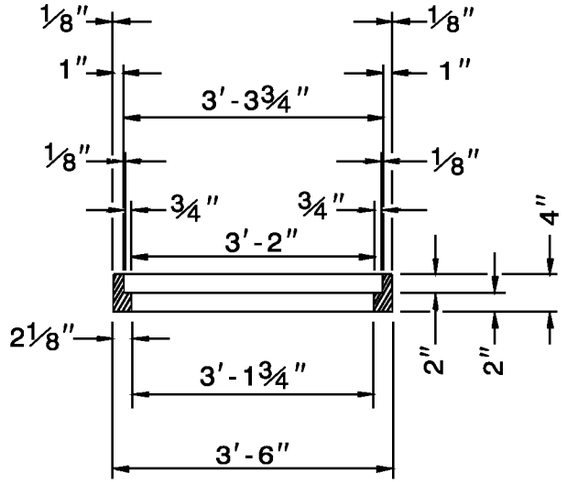

SECTION E-E

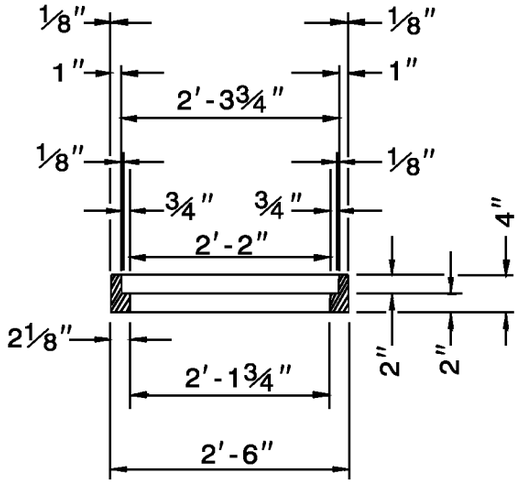

SECTION F-F

STATE OF
NORTH CAROLINA
DEPT. OF TRANSPORTATION
DIVISION OF HIGHWAYS
RALEIGH, N.C.

1-12

ENGLISH STANDARD DRAWING FOR

DROP INLET FRAME AND GRATES

FOR USE WITH STD. DWG.S 840.14 AND 840.15

SHEET 1 OF 1

840.16

STATE OF
NORTH CAROLINA
DEPT. OF TRANSPORTATION
DIVISION OF HIGHWAYS
RALEIGH, N.C.

1-12

ENGLISH STANDARD DRAWING FOR

CONCRETE GRATED DROP INLET TYPE 'A'

12" THRU 72" PIPE

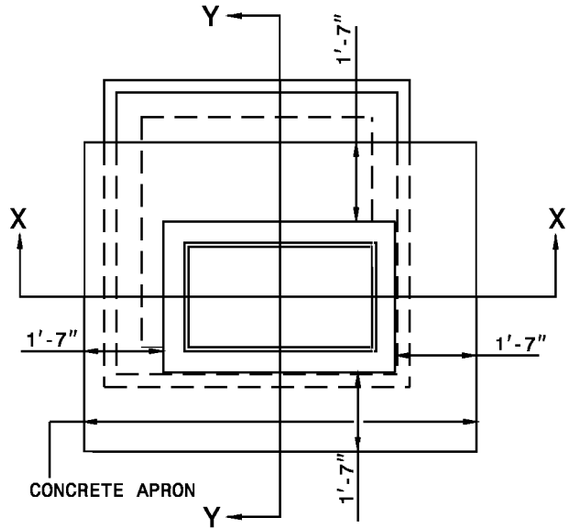

PLAN

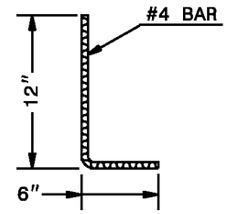

DOWEL-A

GENERAL NOTES:

USE CLASS "B" CONCRETE THROUGHOUT.

PROVIDE ALL GRATED DROP INLETS OVER 3'-6" IN DEPTH WITH STEPS 12" ON CENTER. USE STEPS WHICH COMPLY WITH STD. DRAWING 840.66.

OPTIONAL CONSTRUCTION - MONOLITHIC POUR, 2" KEYWAY, OR #4 BAR DOWELS AT 12" CENTERS AS DIRECTED BY THE ENGINEER.

USE FORMS FOR THE CONSTRUCTION OF THE BOTTOM SLAB.

IF REINFORCED CONCRETE PIPE IS SET IN BOTTOM SLAB OF BOX, ADD TO SLAB AS SHOWN ON STD. NO. 840.00.

CONSTRUCT WITH PIPE CROWNS MATCHING.

USE STANDARD FRAMES AND GRATES 840.22 (SHOWN), 840.24(SHOWN), 840.20 (NOT SHOWN) OR 840.29 (NOT SHOWN).

SEE STANDARD DRAWING 840.25 FOR ATTACHMENT OF FRAMES AND GRATES.

CHAMFER ALL EXPOSED CORNERS 1".

DRAWING NOT TO SCALE.

MAX. DEPTH OF THIS STRUCTURE FROM TOP OF BOTTOM SLAB TO TOP ELEVATION IS 12 FEET.

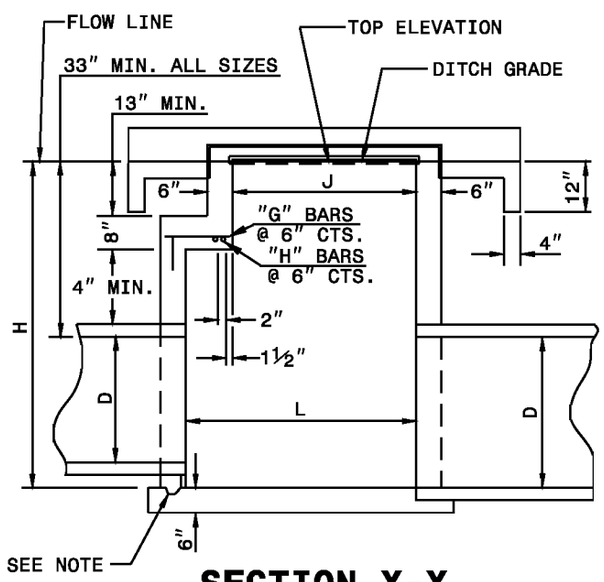

SECTION X-X

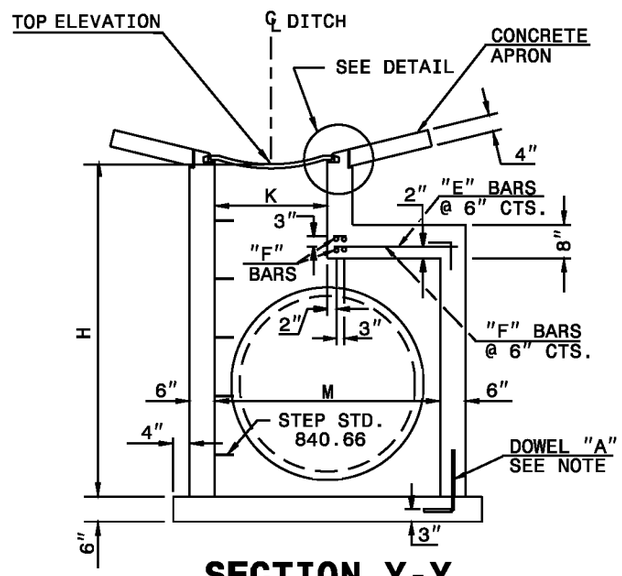

SECTION Y-Y

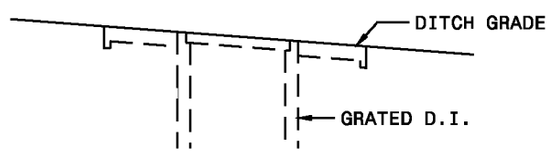

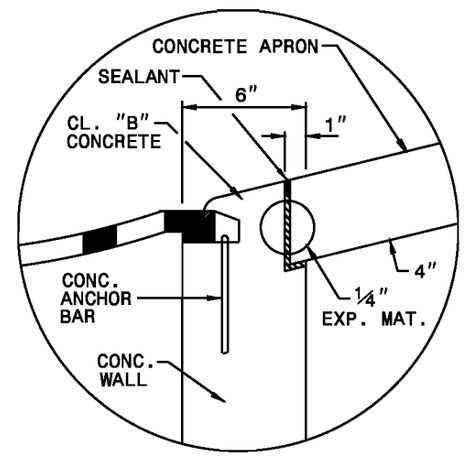

DETAIL

(APRON SUPPORT NOTCH)

SHEET 1 OF 2

840.17

STATE OF
NORTH CAROLINA
DEPT. OF TRANSPORTATION
DIVISION OF HIGHWAYS
RALEIGH, N.C.

1-12

ENGLISH STANDARD DRAWING FOR

CONCRETE GRATED DROP INLET TYPE 'A'

12" THRU 72" PIPE

SHEET 1 OF 2

840.17

STATE OF NORTH CAROLINA
DEPT. OF TRANSPORTATION
DIVISION OF HIGHWAYS
RALEIGH, N.C.

1-12

ENGLISH STANDARD DRAWING FOR

CONCRETE GRATED DROP INLET TYPE 'A'

12" THRU 72" PIPE

SHEET 2 OF 2

840.17

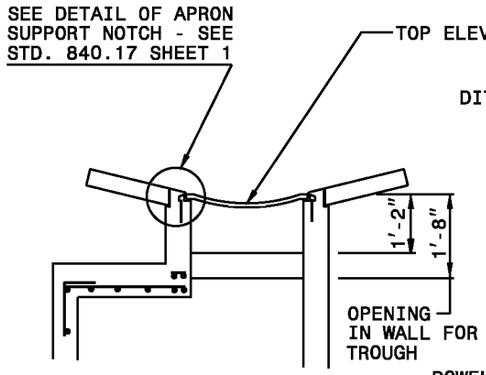

PART SECTION V-V

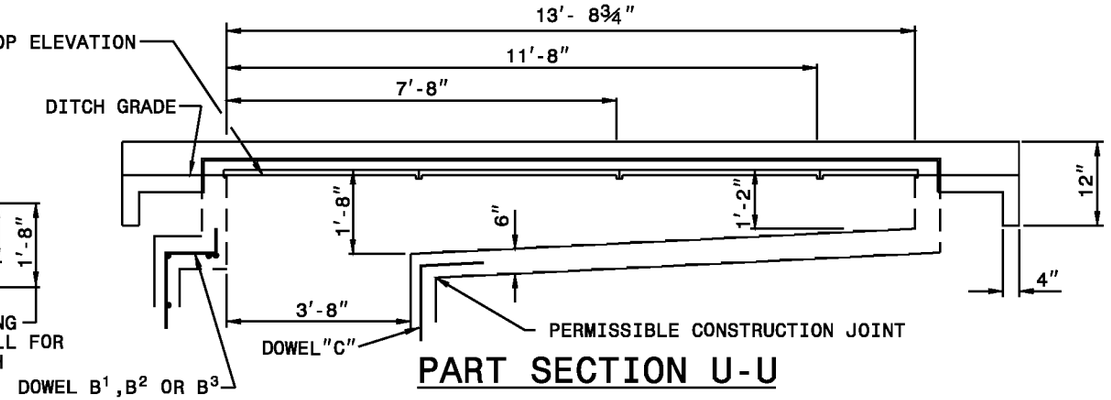

PART SECTION U-U

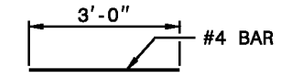

DOWEL-B1

FOR 15" THRU 36" INLET

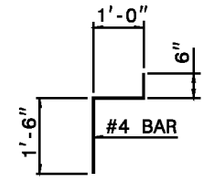

DOWEL-B2

FOR 42" INLET

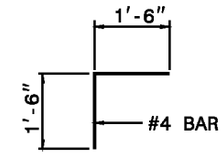

DOWEL-B3

DOWEL-C

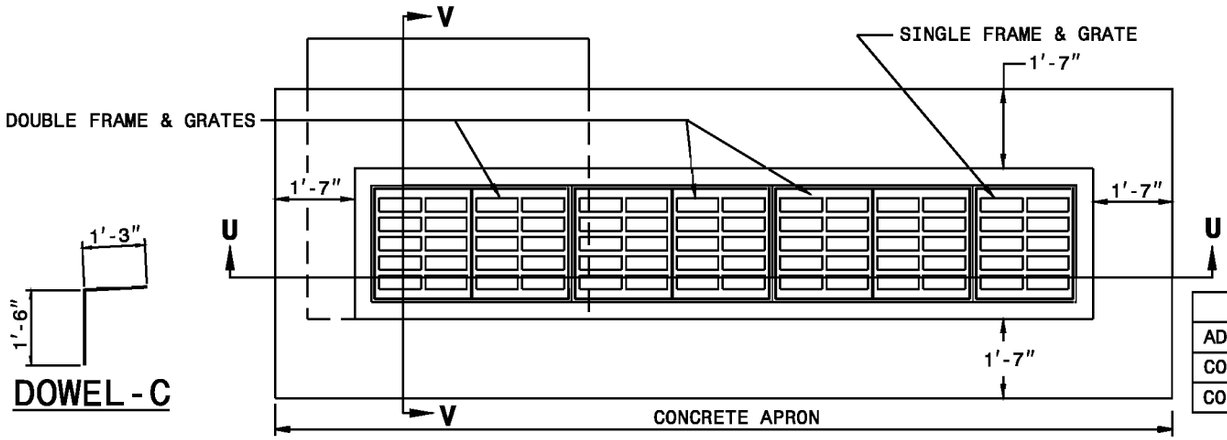

QUANTITY TO BE ADDED FOR EACH 2' INCREMENT INLET OPENING						
ADDITIONAL INLETS	2'-0"	4'-0"	6'-0"	8'-0"	10'-0"	12'-0"
CONCRETE CU. YDS.	0.191	0.417	0.665	0.897	1.145	1.380
CONCRETE APRON CU. YDS.	0.074	0.148	0.222	0.296	0.370	0.444

MIN. DIMENSIONS AND QUANTITIES FOR CONCRETE GRATED DROP INLET(BASED ON MIN. HEIGHT, H)

DIMENSIONS OF BOX AND PIPE						REINFORCING STEEL - NO. 4 BARS									CU YDS CONC. IN BOX					DEDUCTIONS FOR ONE PIPE	
PIPE	SPAN	WIDTH	SPAN	WIDTH	HEIGHT	BARS E		BARS F		BARS G		BARS H		TOTAL	BOTTOM SLAB	H TOTAL	H PER FT HT	APRON	TOTAL		
D	J	K	L	M	H	NO.	LENGTH	NO.	LENGTH	NO.	LENGTH	NO.	LENGTH	LBS.						C.S.	R.C.
12"	3'-8"	2'-0"	3'-8"	2'-0"	3'-9"	—	—	—	—	—	—	—	—	—	0.362	0.926	0.247	0.395	1.683	0.015	0.024
15"	3'-8"	2'-0"	3'-8"	2'-0"	4'-0"	—	—	—	—	—	—	—	—	—	0.362	0.988	0.247	0.395	1.745	0.023	0.036
18"				2'-0"	4'-3"	—	—	—	—	—	—	—	—	—	0.362	1.050	0.247		1.807	0.033	0.049
24"				2'-10"	4'-9"	8	1'-5"	6	4'-9"	—	—	—	—	27	0.444	1.362	0.278		2.201	0.059	0.085
30"			3'-8"	3'-5"	5'-3"	8	2'-0"	7	4'-9"	—	—	—	—	33	0.502	1.644	0.288		2.541	0.092	0.127
36"			4'-0"	4'-0"	5'-9"	8	2'-5"	8	4'-11"	4	0'-9"	2	4'-11"	47	0.560	1.931	0.321		2.920	0.132	0.178
42"			4'-10"	4'-10"	6'-3"	10	3'-1"	9	5'-7"		1'-5"	3	5'-7"	67	0.704	2.500	0.370		3.677	0.180	0.243
48"			5'-4"	5'-4"	6'-9"	11	3'-7"	10	6'-1"		1'-11"	4	6'-1"	87	0.823	3.013	0.407		4.315	0.235	0.317
54"			6'-0"	6'-0"	7'-3"	12	4'-1"	11	6'-7"		2'-5"	5	6'-7"	107	0.951	3.589	0.444		5.072	0.297	0.401
60"			6'-6"	6'-6"	7'-9"	13	4'-9"	12	7'-3"		3'-1"	6	7'-3"	135	1.311	4.539	0.494		6.170	0.367	0.495
66"			7'-2"	7'-2"	8'-3"	14	5'-4"	14	7'-10"		3'-7"	7	7'-10"	168	1.136	5.061	0.537		6.901	0.444	0.599
72"	3'-8"	2'-0"	7'-8"	7'-8"	8'-9"	15	5'-11"	15	8'-5"	4	4'-3"	8	8'-5"	199	1.500	5.860	0.580	0.395	7.868	0.528	0.713

STATE OF NORTH CAROLINA
DEPT. OF TRANSPORTATION
DIVISION OF HIGHWAYS
RALEIGH, N.C.

1-12

ENGLISH STANDARD DRAWING FOR

CONCRETE GRATED DROP INLET TYPE 'A'

12" THRU 72" PIPE

SHEET 2 OF 2

840.17

STATE OF
NORTH CAROLINA
DEPT. OF TRANSPORTATION
DIVISION OF HIGHWAYS
RALEIGH, N.C.

1-12

ENGLISH STANDARD DRAWING FOR

CONCRETE GRATED DROP INLET TYPE 'B'

12" THRU 36" PIPE

SHEET 1 OF 1

840.18

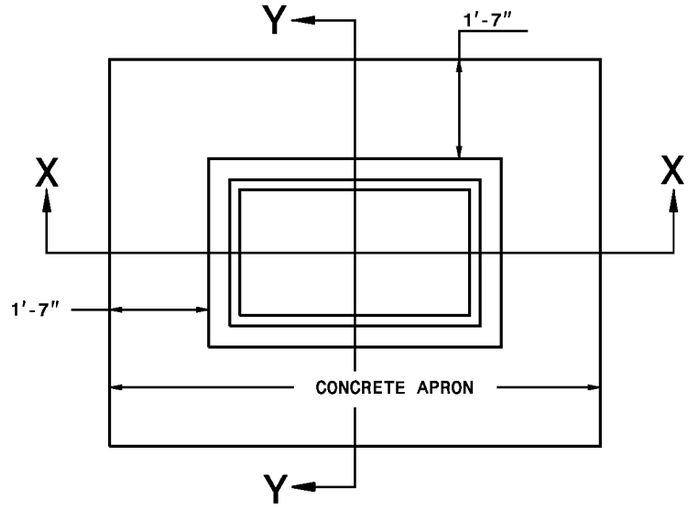

PLAN

GENERAL NOTES:

USE CLASS "B" CONCRETE THROUGHOUT.

PROVIDE ALL GRATED DROP INLETS OVER 3'-6" IN DEPTH WITH STEPS 12" ON CENTER. USE STEPS WHICH COMPLY WITH STD. DRAWING 840.66.

OPTIONAL CONSTRUCTION - MONOLITHIC POUR, 2" KEYWAY, OR #4 BAR DOWELS AT 12" CENTERS AS DIRECTED BY THE ENGINEER.

USE FORMS FOR THE CONSTRUCTION OF THE BOTTOM SLAB.

IF REINFORCED CONCRETE PIPE IS SET IN BOTTOM SLAB OF BOX, ADD TO SLAB AS SHOWN ON STD. NO. 840.00.

CONSTRUCT WITH PIPE CROWNS MATCHING.

MAX. DEPTH OF THIS STRUCTURE FROM TOP OF BOTTOM SLAB TO TOP ELEVATION IS 12 FEET.

USE STANDARD FRAMES AND GRATES 840.22 (SHOWN), 840.24(SHOWN), 840.20, 840.29, AND 840.33.

SEE STANDARD DRAWING 840.25 FOR ATTACHMENT OF FRAMES AND GRATES NOT SHOWN.

CHAMFER ALL EXPOSED CORNERS 1".

DRAWING NOT TO SCALE.

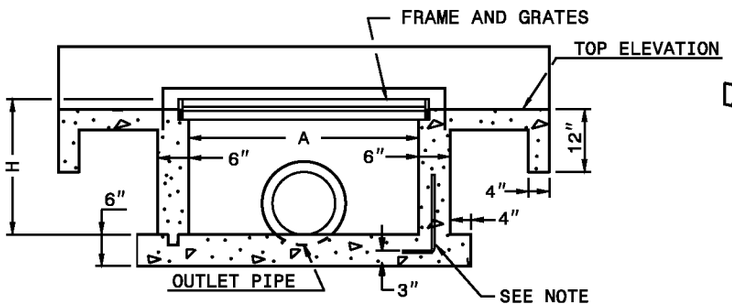

SECTION X-X

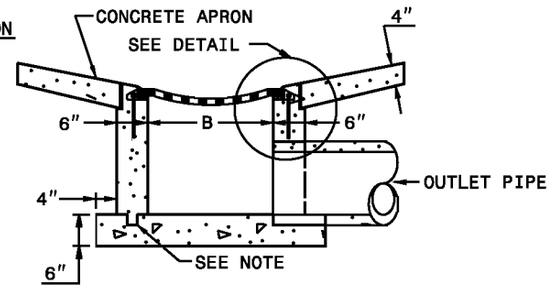

MAX. PIPE THIS SIDE - 18"

SECTION Y-Y

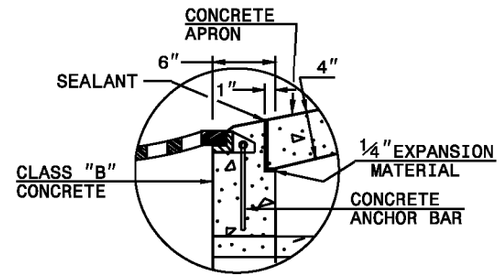

DETAIL

(APRON SUPPORT NOTCH)

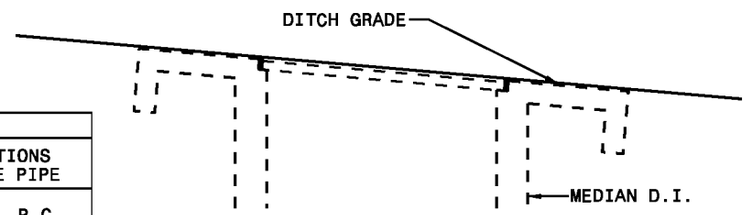

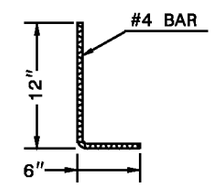

DOWEL "A"

MINIMUM DIMENSIONS AND QUANTITIES FOR CONCRETE GRATED DROP INLET									
PIPE	SPAN	WIDTH	HEIGHT	CUBIC YARDS OF CONCRETE IN BOX				DEDUCTIONS FOR ONE PIPE	
D	A	B	H	BOTTOM SLAB	H PER FT. HT.	H MIN. TOTAL	TOTAL	C.S.	R.C.
12"	3'-8"	2'-0"	2'-6"	0.362	0.247	0.597	0.958	0.020	0.032
15"	3'-8"	2'-0"	2'-9"	0.362	0.247	0.659	1.021	0.023	0.036
18"	3'-8"	2'-0"	3'-0"	0.362	0.247	0.720	1.082	0.033	0.049
24"	3'-8"	2'-0"	3'-6"	0.362	0.247	0.865	1.227	0.059	0.085
30"	3'-8"	2'-0"	4'-0"	0.362	0.247	0.988	1.350	0.092	0.127
36"	3'-8"	2'-0"	4'-6"	0.362	0.247	1.112	1.474	0.132	0.178

STATE OF
NORTH CAROLINA
DEPT. OF TRANSPORTATION
DIVISION OF HIGHWAYS
RALEIGH, N.C.

1-12

ENGLISH STANDARD DRAWING FOR

CONCRETE GRATED DROP INLET TYPE 'B'

12" THRU 36" PIPE

SHEET 1 OF 1

840.18

STATE OF
NORTH CAROLINA
DEPT. OF TRANSPORTATION
DIVISION OF HIGHWAYS
RALEIGH, N.C.

1-12

ENGLISH STANDARD DRAWING FOR

CONCRETE GRATED DROP INLET TYPE 'D'

12" THRU 36" PIPE

SHEET 1 OF 1

840.19

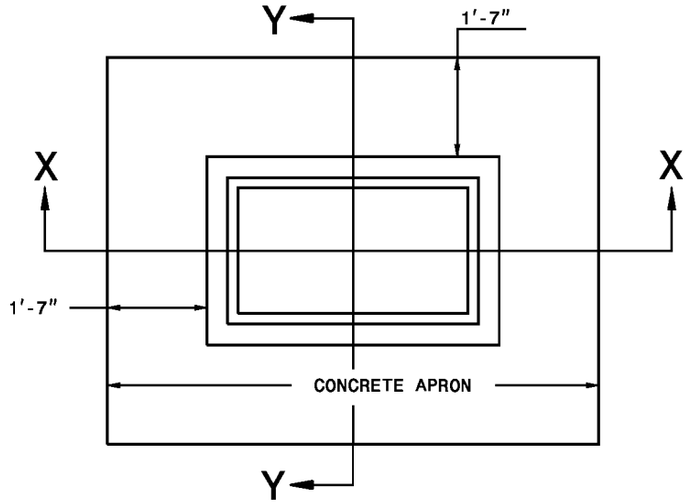

PLAN

GENERAL NOTES:

USE CLASS "B" CONCRETE THROUGHOUT.

PROVIDE ALL DROP INLETS OVER 3'-6" IN DEPTH WITH STEPS 12" ON CENTER. USE STEPS WHICH COMPLY WITH STD. DRAWING 840.66.

OPTIONAL CONSTRUCTION - MONOLITHIC POUR, 2" KEYWAY, OR #4 BAR DOWELS AT 12" CENTERS AS DIRECTED BY THE ENGINEER.

USE FORMS FOR THE CONSTRUCTION OF THE BOTTOM SLAB.

IF REINFORCED CONCRETE PIPE IS SET IN BOTTOM SLAB OF BOX, ADD TO SLAB AS SHOWN ON STD. NO. 840.00.

CONSTRUCT WITH PIPE CROWNS MATCHING.

MAX. DEPTH OF THIS STRUCTURE FROM TOP OF BOTTOM SLAB TO TOP ELEVATION IS 12 FEET.

USE STANDARD FRAMES AND GRATES 840.22 (SHOWN), 840.24(SHOWN), 840.20, 840.29, AND 840.33.

SEE STANDARD DRAWING 840.25 FOR ATTACHMENT OF FRAMES AND GRATES NOT SHOWN.

CHAMFER ALL EXPOSED CORNERS 1".

DRAWING NOT TO SCALE.

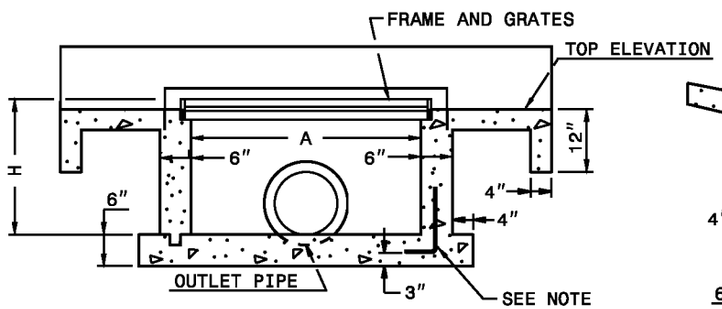

SECTION X-X

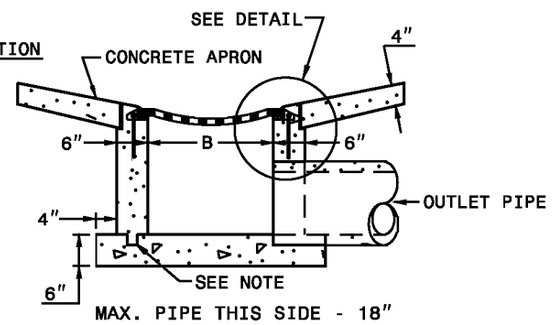

SECTION Y-Y

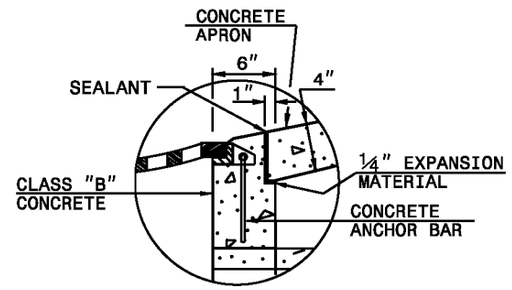

DETAIL

(APRON SUPPORT NOTCH)

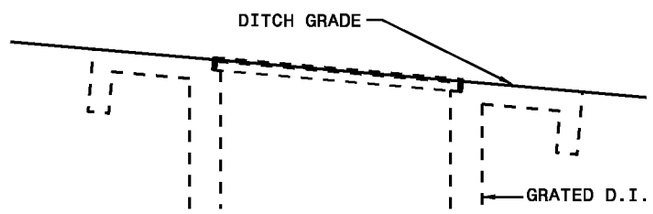

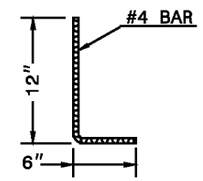

DOWEL "A"

MINIMUM DIMENSIONS AND QUANTITIES FOR CONCRETE GRATED DROP INLET									
PIPE	SPAN	WIDTH	HEIGHT	CUBIC YARDS OF CONCRETE IN BOX				DEDUCTIONS FOR ONE PIPE	
D	A	B	H	BOTTOM SLAB	H PER FT. HT.	H MIN. TOTAL	TOTAL	C.S.	R.C.
12"	3'-8"	2'-0"	1'-8"	0.362	0.247	0.391	0.753	0.020	0.032
15"	3'-8"	2'-0"	1'-11"	0.362	0.247	0.453	0.815	0.023	0.036
18"	3'-8"	2'-0"	2'-2"	0.362	0.247	0.515	0.877	0.033	0.049
24"	3'-8"	2'-0"	2'-8"	0.362	0.247	0.659	1.021	0.059	0.085
30"	3'-8"	2'-0"	3'-2"	0.362	0.247	0.782	1.144	0.092	0.127
36"	3'-8"	2'-0"	3'-8"	0.362	0.247	0.906	1.268	0.132	0.178

STATE OF
NORTH CAROLINA
DEPT. OF TRANSPORTATION
DIVISION OF HIGHWAYS
RALEIGH, N.C.

1-12

ENGLISH STANDARD DRAWING FOR

CONCRETE GRATED DROP INLET TYPE 'D'

12" THRU 36" PIPE

SHEET 1 OF 1

840.19

STATE OF
NORTH CAROLINA
DEPT. OF TRANSPORTATION
DIVISION OF HIGHWAYS
RALEIGH, N.C.

1-12

ENGLISH STANDARD DRAWING FOR

FRAMES AND WIDE SLOT FLAT GRATES

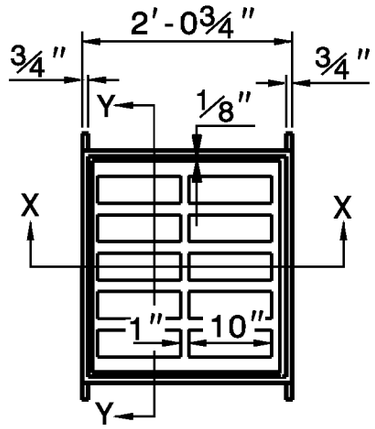

PLAN

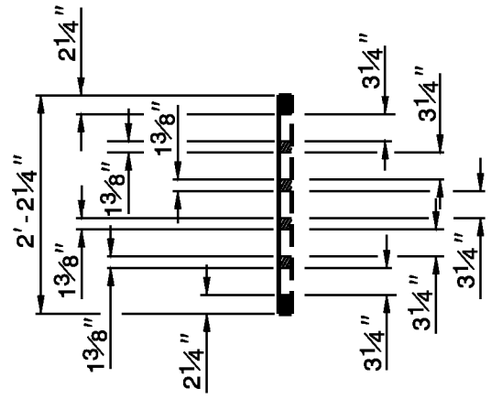

GRATE SECTION Y-Y

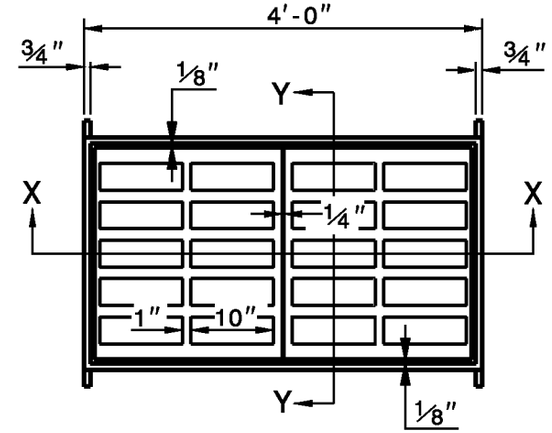

PLAN

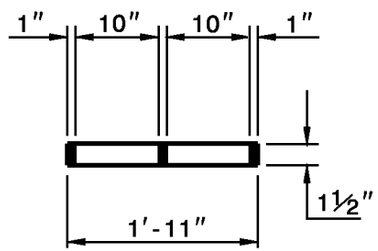

GRATE SECTION X-X

NOTE:
SEE STD. DWG. 840.25
FOR FRAME ANCHORAGE.

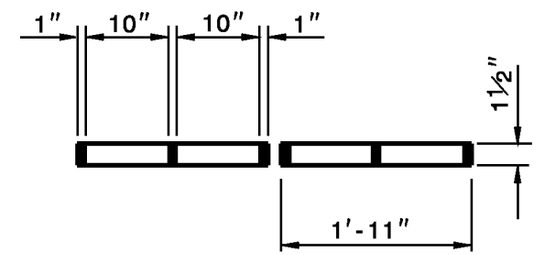

GRATE SECTION X-X

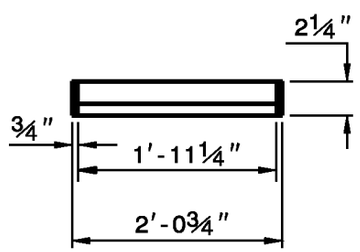

FRAME SECTION X-X

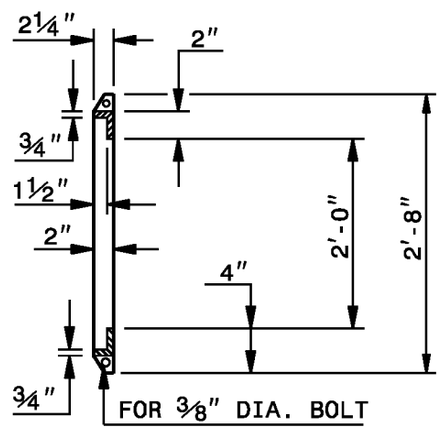

FRAME SECTION Y-Y

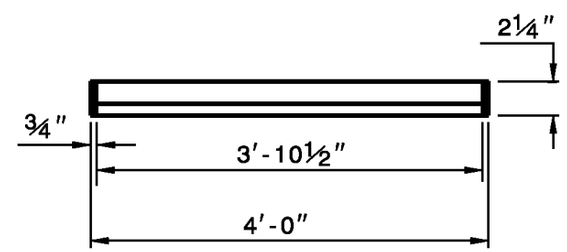

FRAME SECTION X-X

SHEET 1 OF 1

840.20

STATE OF
NORTH CAROLINA
DEPT. OF TRANSPORTATION
DIVISION OF HIGHWAYS
RALEIGH, N.C.

1-12

ENGLISH STANDARD DRAWING FOR

FRAMES AND WIDE SLOT FLAT GRATES

SHEET 1 OF 1

840.20

STATE OF
NORTH CAROLINA
DEPT. OF TRANSPORTATION
DIVISION OF HIGHWAYS
RALEIGH, N.C.

1-12

ENGLISH STANDARD DRAWING FOR

FRAMES AND WIDE SLOT SAG GRATES

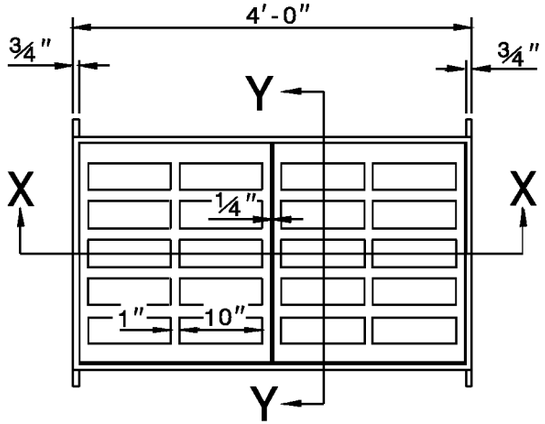

PLAN

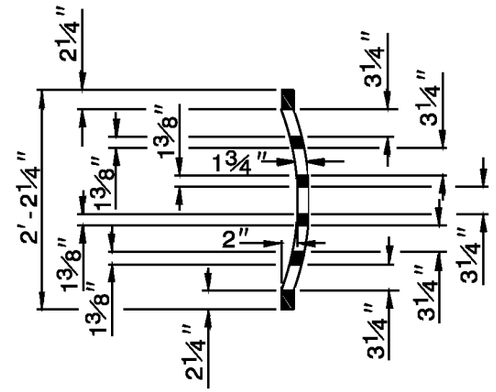

GRATE SECTION Y-Y

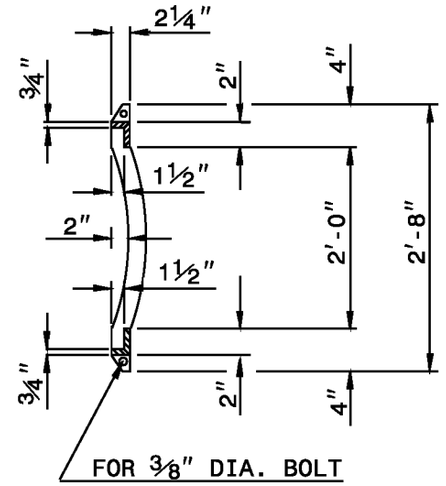

FRAME SECTION Y-Y

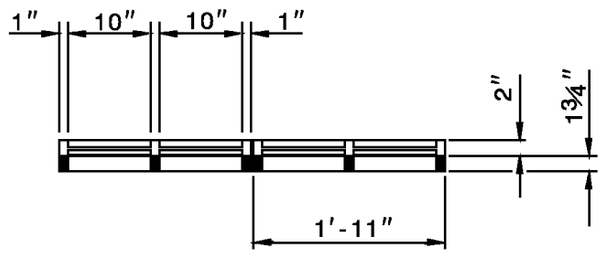

GRATE SECTION X-X

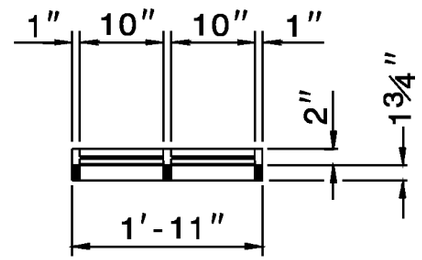

GRATE SECTION X-X

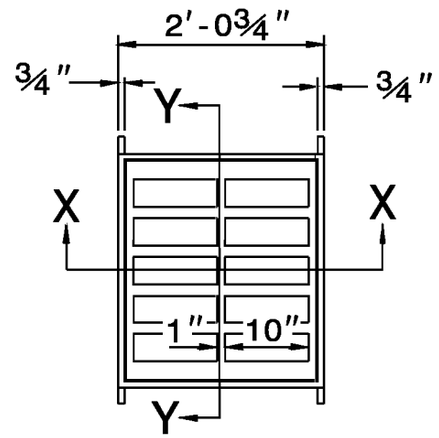

PLAN

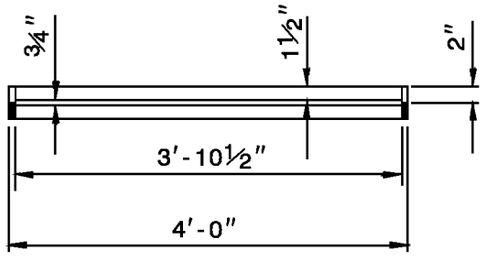

FRAME SECTION X-X

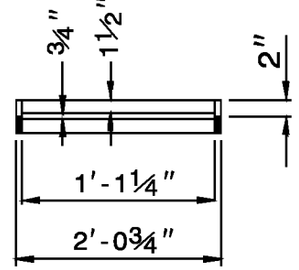

FRAME SECTION X-X

NOTE:
SEE STD. DWG. 840.25
FOR FRAME ANCHORAGE.

SHEET 1 OF 1

840.22

STATE OF
NORTH CAROLINA
DEPT. OF TRANSPORTATION
DIVISION OF HIGHWAYS
RALEIGH, N.C.

1-12

ENGLISH STANDARD DRAWING FOR

FRAMES AND WIDE SLOT SAG GRATES

SHEET 1 OF 1

840.22

STATE OF
NORTH CAROLINA
DEPT. OF TRANSPORTATION
DIVISION OF HIGHWAYS
RALEIGH, N.C.

1-12

ENGLISH STANDARD DRAWING FOR
FRAMES AND NARROW SLOT SAG GRATES

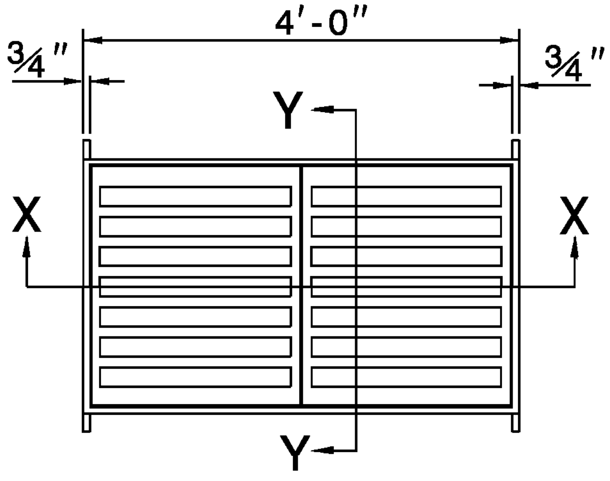

PLAN

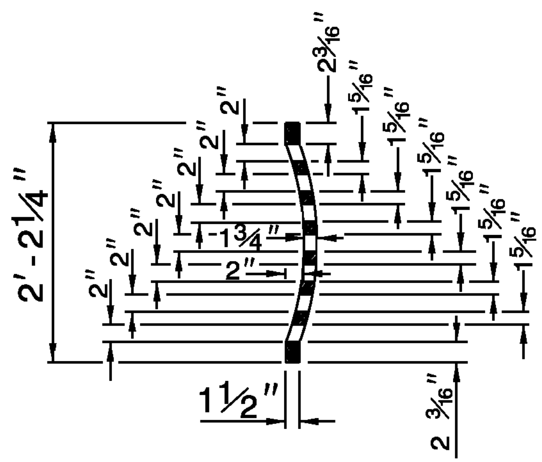

GRATE SECTION Y-Y

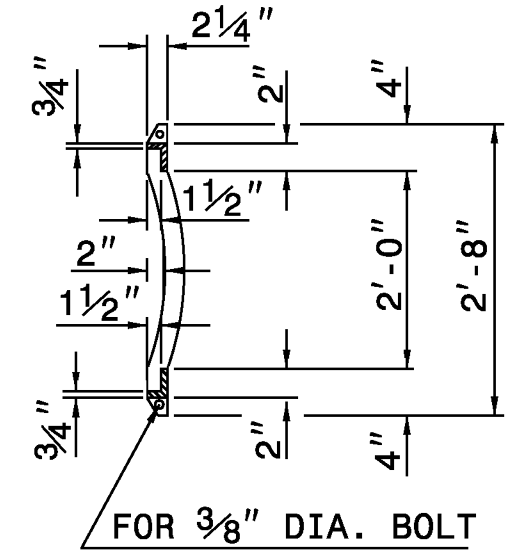

FRAME SECTION Y-Y

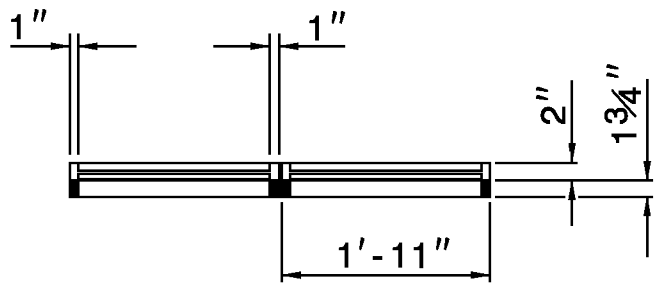

GRATE SECTION X-X

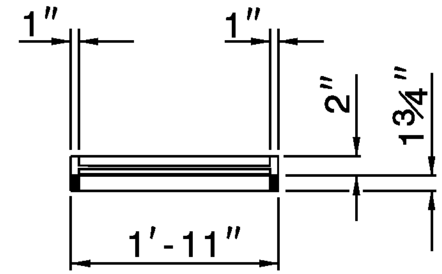

GRATE SECTION X-X

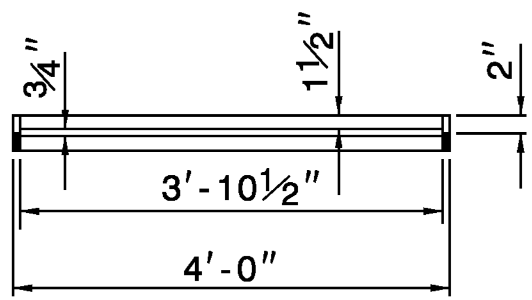

FRAME SECTION X-X

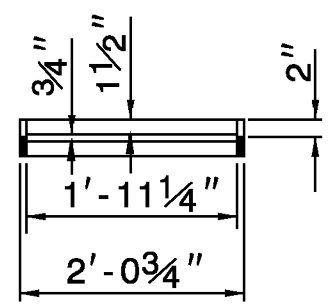

FRAME SECTION X-X

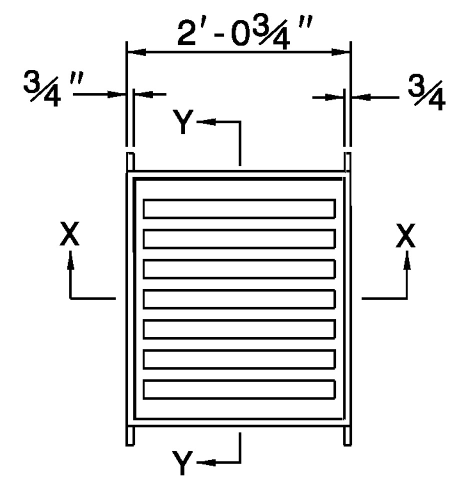

PLAN

NOTE:
SEE STD. DWG. 840.25
FOR FRAME ANCHORAGE.

SHEET 1 OF 1
840.24

STATE OF
NORTH CAROLINA
DEPT. OF TRANSPORTATION
DIVISION OF HIGHWAYS
RALEIGH, N.C.
1-12
ENGLISH STANDARD DRAWING FOR
FRAMES AND NARROW SLOT SAG GRATES
SHEET 1 OF 1
840.24

STATE OF
NORTH CAROLINA
DEPT. OF TRANSPORTATION
DIVISION OF HIGHWAYS
RALEIGH, N.C.

1-12

ENGLISH STANDARD DRAWING FOR

ANCHORAGE FOR FRAMES

BRICK/CONCRETE/PRECAST CONCRETE

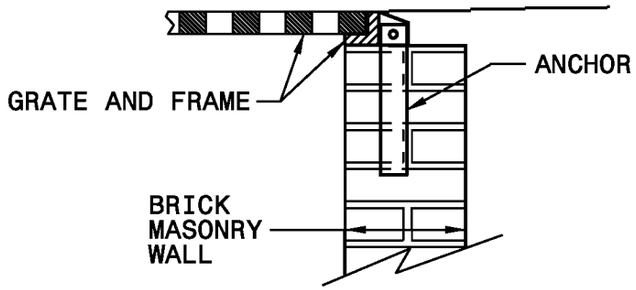

BRICK MASONRY CONSTRUCTION

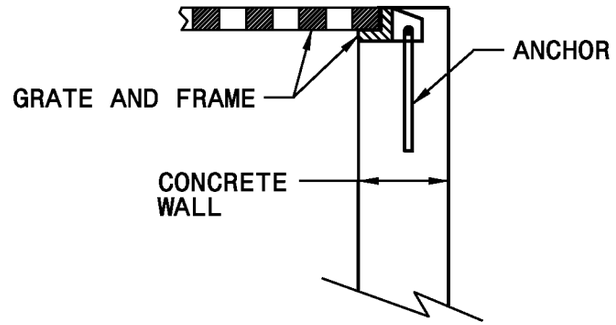

CONCRETE CONSTRUCTION

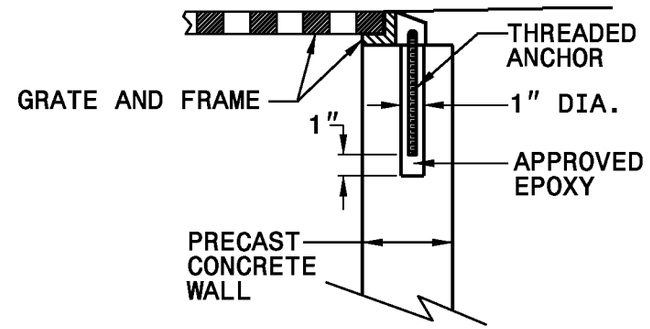

PRECAST CONCRETE CONSTRUCTION

DETAIL SHOWING ANCHORAGE OF FRAME FOR GRATED DROP INLET

NOTE:
CONSTRUCT GRATED DROP INLET TO COINCIDE WITH NORMAL OR SUPERELEVATED SHOULDER OR PAVEMENT SLOPE.

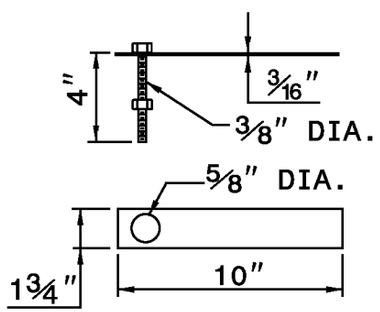

MASONRY ANCHOR

3/8" DIA. BOLT WITH PLATE

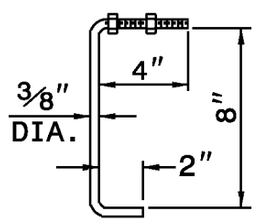

CONCRETE ANCHOR

3/8" DIA. BENT BAR

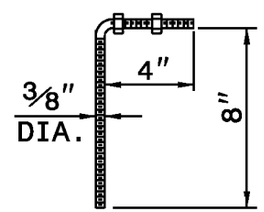

PRECAST CONCRETE ANCHOR

3/8" DIA. BENT BAR

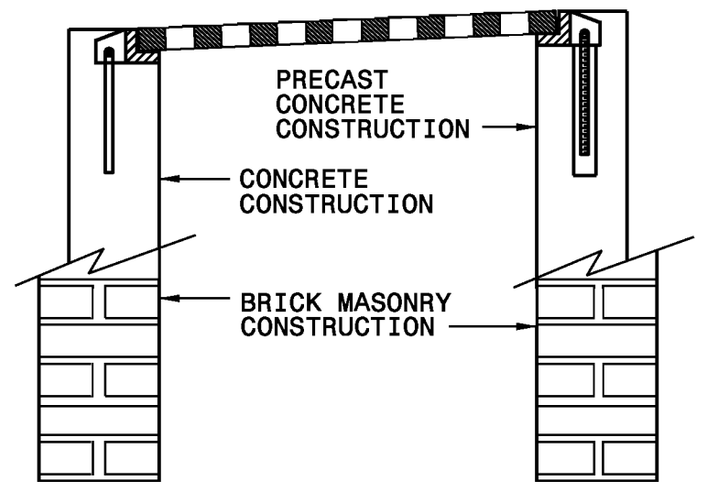

FRAME AND GRATE INSTALLATION FOR NORMAL CROWN AND SUPERELEVATED SECTIONS

SHEET 1 OF 1

840.25

STATE OF
NORTH CAROLINA
DEPT. OF TRANSPORTATION
DIVISION OF HIGHWAYS
RALEIGH, N.C.

1-12

ENGLISH STANDARD DRAWING FOR

ANCHORAGE FOR FRAMES

BRICK/CONCRETE/PRECAST CONCRETE

SHEET 1 OF 1

840.25

STATE OF
NORTH CAROLINA
DEPT. OF TRANSPORTATION
DIVISION OF HIGHWAYS
RALEIGH, N.C.

1-12

ENGLISH STANDARD DRAWING FOR

BRICK GRATED DROP INLET TYPE 'A'

12" THRU 72" PIPE

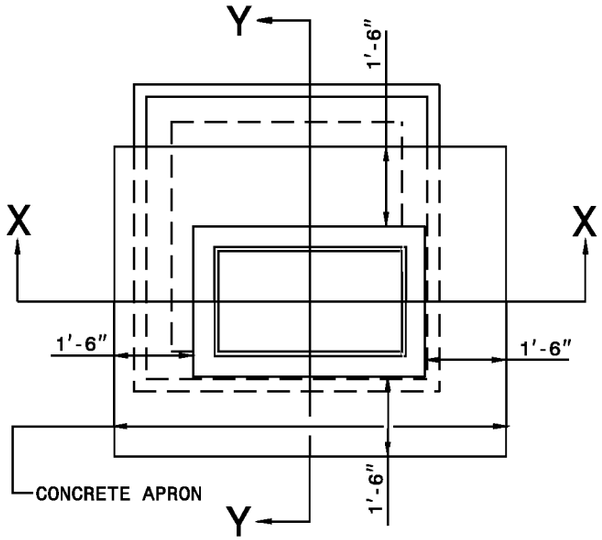

PLAN

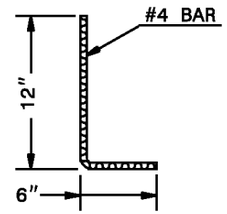

DOWEL-A

GENERAL NOTES:

USE CLASS "B" CONCRETE THROUGHOUT.

JUMBO BRICK WILL BE PERMITTED. CONCRETE BRICK OR 4" SOLID CONCRETE BLOCKS MAY BE USED IN LIEU OF CLAY BRICKS.

PROVIDE ALL DROP INLETS OVER 3'-6" IN DEPTH WITH STEPS 12" ON CENTER. USE STEPS WHICH COMPLY WITH STD. DRAWING 840.66.

USE #4 BAR DOWELS AT 12" CENTERS.

USE FORMS FOR THE CONSTRUCTION OF THE BOTTOM SLAB.

IF REINFORCED CONCRETE PIPE IS SET IN BOTTOM SLAB OF BOX, ADD TO SLAB AS SHOWN ON STD. NO. 840.00.

CONSTRUCT WITH PIPE CROWNS MATCHING.

MAX. DEPTH OF THIS STRUCTURE FROM TOP OF BOTTOM SLAB TO TOP ELEVATION IS 12 FEET.

USE STANDARD FRAMES AND GRATES 840.22 (SHOWN), 840.24(SHOWN), 840.20, 840.29, AND 840.33.

SEE STANDARD DRAWING 840.25 FOR ATTACHMENT OF FRAMES AND GRATES NOT SHOWN.

CHAMFER ALL EXPOSED CORNERS 1".

DRAWING NOT TO SCALE.

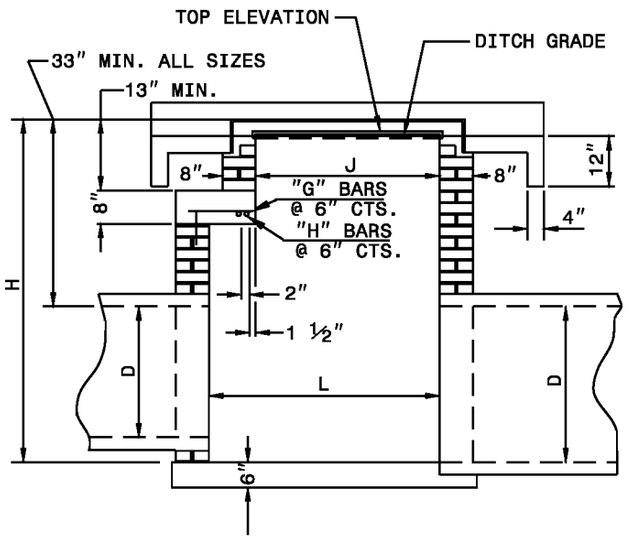

SECTION X-X

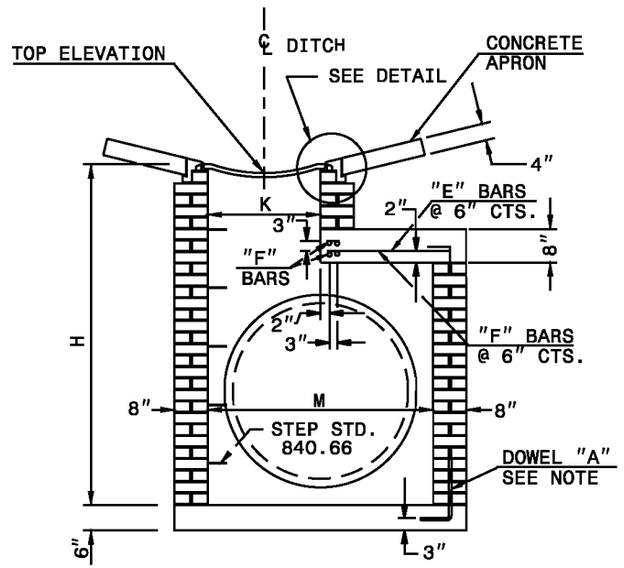

SECTION Y-Y

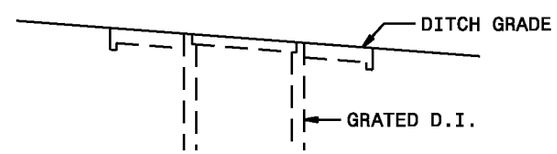

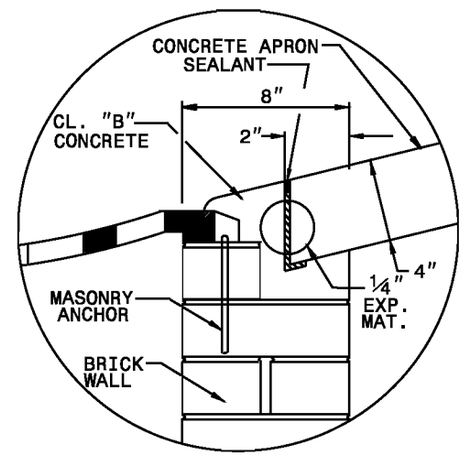

DETAIL

(APRON SUPPORT NOTCH)

SHEET 1 OF 2

840.26

STATE OF
NORTH CAROLINA
DEPT. OF TRANSPORTATION
DIVISION OF HIGHWAYS
RALEIGH, N.C.

1-12

ENGLISH STANDARD DRAWING FOR

BRICK GRATED DROP INLET TYPE 'A'

12" THRU 72" PIPE

SHEET 1 OF 2

840.26

STATE OF NORTH CAROLINA
DEPT. OF TRANSPORTATION
DIVISION OF HIGHWAYS
RALEIGH, N.C.

1-12

ENGLISH STANDARD DRAWING FOR

BRICK GRATED DROP INLET TYPE 'A'

12" THRU 72" PIPE

SHEET 2 OF 2

840.26

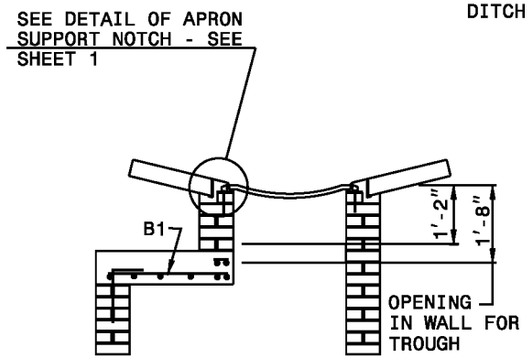

PART SECTION V-V

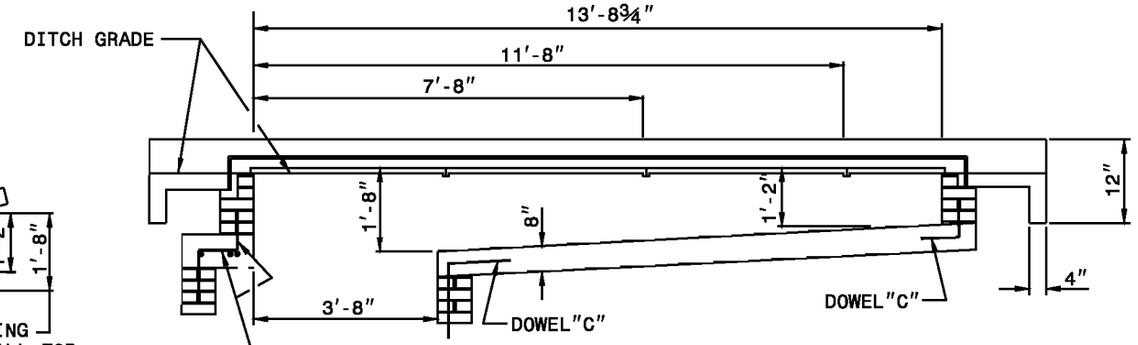

PART SECTION U-U

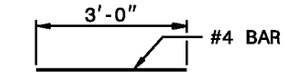

DOWEL-B1

FOR 12" THRU 36" INLET

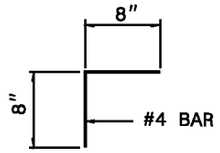

DOWEL-B2

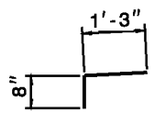

DOWEL-C

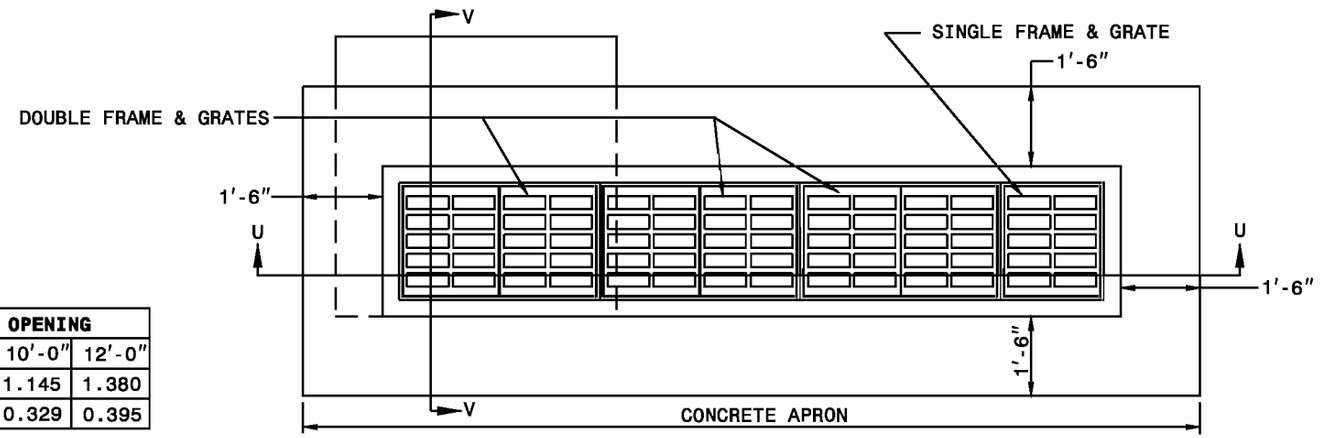

QUANTITY TO BE ADDED FOR EACH 2' INCREMENT INLET OPENING						
ADDITIONAL INLETS	2'-0"	4'-0"	6'-0"	8'-0"	10'-0"	12'-0"
CONCRETE CU. YDS.	0.191	0.417	0.665	0.897	1.145	1.380
CONCRETE APRON CU. YDS.	0.065	0.132	0.198	0.263	0.329	0.395

DIMENSIONS AND QUANTITIES FOR BRICK GRATED DROP INLET (BASED ON MIN. HEIGHT, H)

DIMENSIONS OF BOX AND PIPE						REINFORCING STEEL - NO. 4 BARS									CU.YDS. CONC. IN BOX				CU.YDS. BRICK MASONRY IN BOX		BRICK AND CONC.	DEDUCTIONS FOR ONE PIPE	
PIPE	SPAN	WIDTH	SPAN	WIDTH	HEIGHT	BARS E		BARS F		BARS G		BARS H		TOTAL LBS.	TOP SLAB	BOTTOM SLAB	APRON	TOTAL	H TOTAL	H PER FT HT	TOTAL	C.S.	R.C.
D	J	K	L	M	H	NO.	LENGTH	NO.	LENGTH	NO.	LENGTH	NO.	LENGTH										
12"	3'-8"	2'-0"	3'-8"	2'-0"	3'-9"	—	—	—	—	—	—	—	—	—	—	0.308	0.351	0.659	1.301	0.346 ABOVE MIN H	1.960	0.020	0.032
15"	3'-8"	2'-0"	3'-8"	2'-0"	4'-0"	—	—	—	—	—	—	—	—	—	—	0.308	0.351	0.659	1.407		2.066	0.031	0.047
18"				2'-0"	4'-3"	—	—	—	—	—	—	—	—	—	—	0.308		0.659	1.471		2.130	0.044	0.065
24"				2'-10"	4'-9"	8	1'-3"	6	4'-9"	—	—	—	—	26	0.185	0.386		0.922	1.646	0.346	2.568	0.078	0.113
30"			3'-8"	3'-5"	5'-3"	8	1'-10"	7	4'-9"	—	—	—	—	32	0.301	0.410		1.062	1.936		2.998	0.122	0.170
36"			3'-10"	3'-10"	5'-9"	8	2'-3"	8	4'-10"	4	0'-7"	2	4'-11"	46	0.374	0.494		1.219	2.187		3.406	0.176	0.238
42"			4'-6"	4'-6"	6'-3"	10	2'-11"	9	5'-7"		1'-3"	3	5'-7"	68	0.555	0.630		1.536	2.717		4.253	0.240	0.323
48"			5'-0"	5'-0"	6'-9"	11	3'-5"	10	6'-1"		1'-9"	4	6'-1"	87	0.705	0.743		1.799	3.221	H	5.020	0.313	0.422
54"			5'-6"	5'-6"	7'-3"	12	3'-11"	11	6'-7"		2'-3"	5	6'-7"	108	0.868	0.865		2.084	3.786		5.870	0.396	0.535
60"			6'-2"	6'-2"	7'-9"	13	4'-7"	12	7'-3"		2'-11"	6	7'-3"	135	1.104	1.042		2.497	4.701		7.198	0.489	0.660
66"			6'-9"	6'-9"	8'-3"	14	5'-2"	14	7'-10"		3'-6"	7	7'-10"	168	1.328	1.210		2.889	5.189		8.078	0.591	0.798
72"	3'-8"	2'-0"	7'-4"	7'-4"	8'-9"	15	5'-9"	15	8'-5"	4	4'-1"	8	8'-5"	198	1.569	1.391	0.351	3.311	5.954	0.346	8.905	0.704	0.950

STATE OF NORTH CAROLINA
DEPT. OF TRANSPORTATION
DIVISION OF HIGHWAYS
RALEIGH, N.C.

1-12

ENGLISH STANDARD DRAWING FOR

BRICK GRATED DROP INLET TYPE 'A'

12" THRU 72" PIPE

SHEET 2 OF 2

840.26

STATE OF
NORTH CAROLINA
DEPT. OF TRANSPORTATION
DIVISION OF HIGHWAYS
RALEIGH, N.C.

1-12

ENGLISH STANDARD DRAWING FOR

BRICK GRATED DROP INLET TYPE 'B'

12" THRU 36" PIPE

SHEET 1 OF 1

840.27

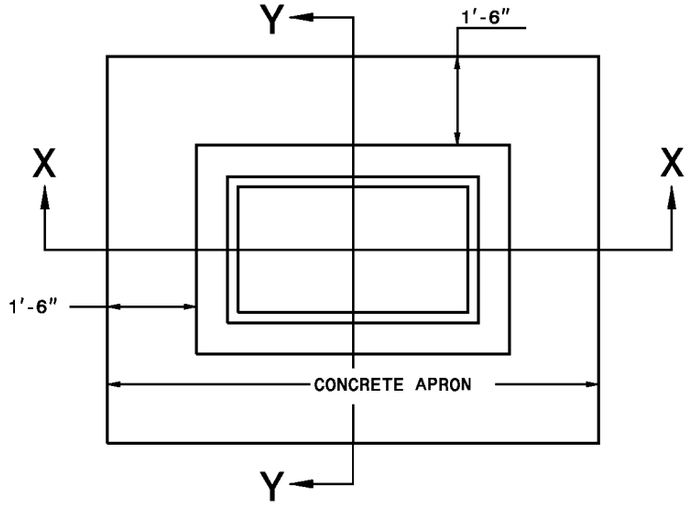

PLAN

GENERAL NOTES:

USE CLASS "B" CONCRETE THROUGHOUT.

JUMBO BRICK WILL BE PERMITTED. CONCRETE BRICK OR 4" SOLID CONCRETE BLOCKS MAY BE USED IN LIEU OF CLAY BRICKS.

PROVIDE ALL DROP INLETS OVER 3'-6" IN DEPTH WITH STEPS 12" ON CENTER. USE STEPS WHICH COMPLY WITH STD. DRAWING 840.66.

USE #4 BAR DOWELS AT 12" CENTERS.

USE FORMS FOR THE CONSTRUCTION OF THE BOTTOM SLAB.

IF REINFORCED CONCRETE PIPE IS SET IN BOTTOM SLAB OF BOX, ADD TO SLAB AS SHOWN ON STD. NO. 840.00.

CONSTRUCT WITH PIPE CROWNS MATCHING.

MAX. DEPTH OF THIS STRUCTURE FROM TOP OF BOTTOM SLAB TO TOP ELEVATION IS 12 FEET.

USE STANDARD FRAMES AND GRATES 840.22 (SHOWN), 840.24(SHOWN), 840.20, 840.29, AND 840.33.

SEE STANDARD DRAWING 840.25 FOR ATTACHMENT OF FRAMES AND GRATES NOT SHOWN.

CHAMFER ALL EXPOSED CORNERS 1".

DRAWING NOT TO SCALE.

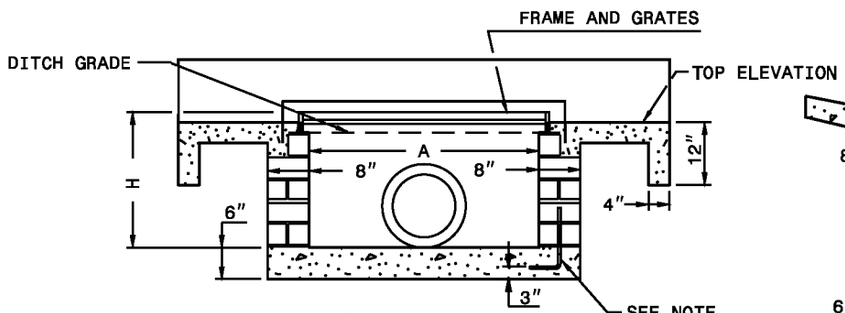

SECTION X-X

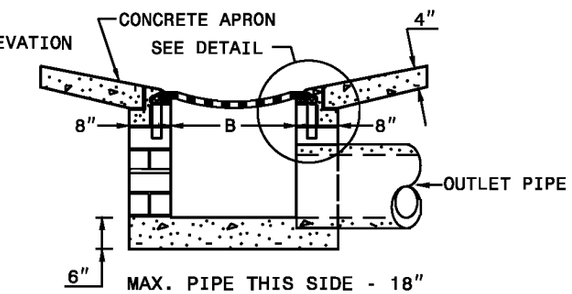

SECTION Y-Y

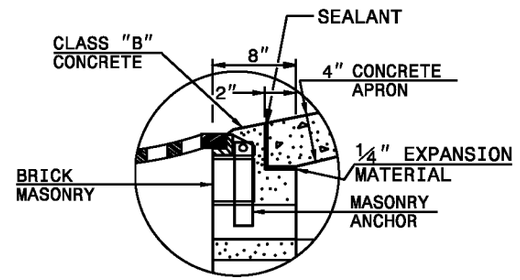

DETAIL

(APRON SUPPORT NOTCH)

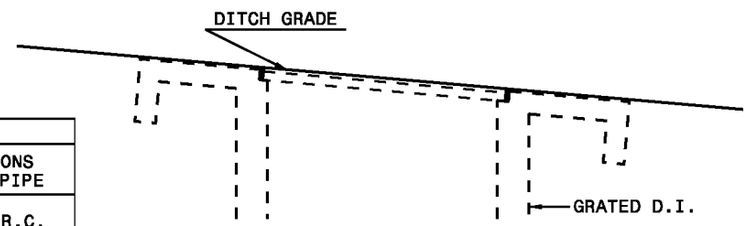

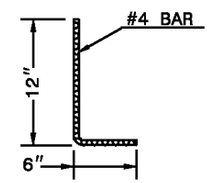

DOWEL "A"

MINIMUM DIMENSIONS AND QUANTITIES FOR BRICK GRATED DROP INLET									
PIPE	SPAN	WIDTH	HEIGHT	CU. YD. OF CONC IN BOX	CU. YD. OF BRICK MASONRY IN BOX		TOTAL CU. YD. IN BOX	DEDUCTIONS FOR ONE PIPE	
D	A	B	H	BOTTOM SLAB	H PER FT. HT.	TOTAL H		C.S.	R.C.
12"	3'-8"	2'-0"	2'-6"	0.309	0.346	0.836	1.145	0.020	0.032
15"	3'-8"	2'-0"	2'-9"	0.309	0.346	0.923	1.232	0.023	0.036
18"	3'-8"	2'-0"	3'-0"	0.309	0.346	1.009	1.318	0.033	0.049
24"	3'-8"	2'-0"	3'-6"	0.309	0.346	1.211	1.520	0.059	0.085
30"	3'-8"	2'-0"	4'-0"	0.309	0.346	1.384	1.693	0.092	0.127
36"	3'-8"	2'-0"	4'-6"	0.309	0.346	1.557	1.866	0.132	0.178

STATE OF
NORTH CAROLINA
DEPT. OF TRANSPORTATION
DIVISION OF HIGHWAYS
RALEIGH, N.C.

1-12

ENGLISH STANDARD DRAWING FOR

BRICK GRATED DROP INLET TYPE 'B'

12" THRU 36" PIPE

SHEET 1 OF 1

840.27

STATE OF
NORTH CAROLINA
DEPT. OF TRANSPORTATION
DIVISION OF HIGHWAYS
RALEIGH, N.C.

1-12

ENGLISH STANDARD DRAWING FOR

BRICK GRATED DROP INLET TYPE 'D'

12" THRU 36" PIPE

SHEET 1 OF 1

840.28

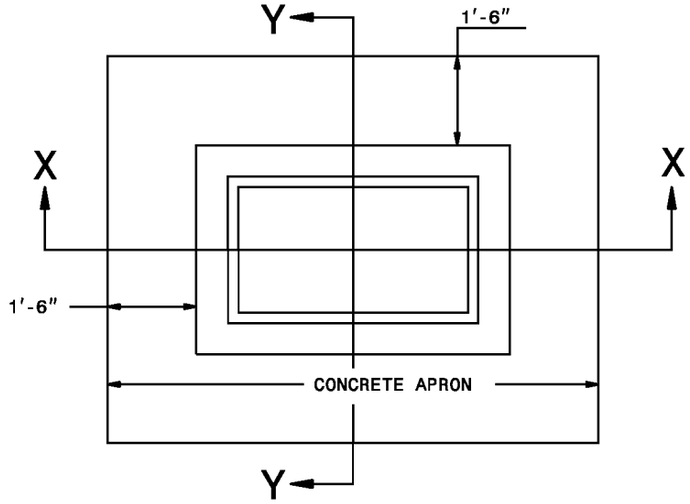

PLAN

GENERAL NOTES:

USE CLASS "B" CONCRETE THROUGHOUT.

JUMBO BRICK WILL BE PERMITTED. CONCRETE BRICK OR 4" SOLID CONCRETE BLOCKS MAY BE USED IN LIEU OF CLAY BRICKS.

PROVIDE ALL DROP INLETS OVER 3'-6" IN DEPTH WITH STEPS 12" ON CENTER. USE STEPS WHICH COMPLY WITH STD. DRAWING 840.66.

USE #4 BAR DOWELS AT 12" CENTERS.

USE FORMS FOR THE CONSTRUCTION OF THE BOTTOM SLAB.

IF REINFORCED CONCRETE PIPE IS SET IN BOTTOM SLAB OF BOX, ADD TO SLAB AS SHOWN ON STD. NO. 840.00.

CONSTRUCT WITH PIPE CROWNS MATCHING.

USE STANDARD FRAMES AND GRATES 840.22 (SHOWN), 840.24(SHOWN), 840.20, 840.29, AND 840.33.

SEE STANDARD DRAWING 840.25 FOR ATTACHMENT OF FRAMES AND GRATES NOT SHOWN.

CHAMFER ALL EXPOSED CORNERS 1".

DRAWING NOT TO SCALE.

MAX. DEPTH OF THIS STRUCTURE FROM TOP OF BOTTOM SLAB TO TOP ELEVATION IS 12 FEET.

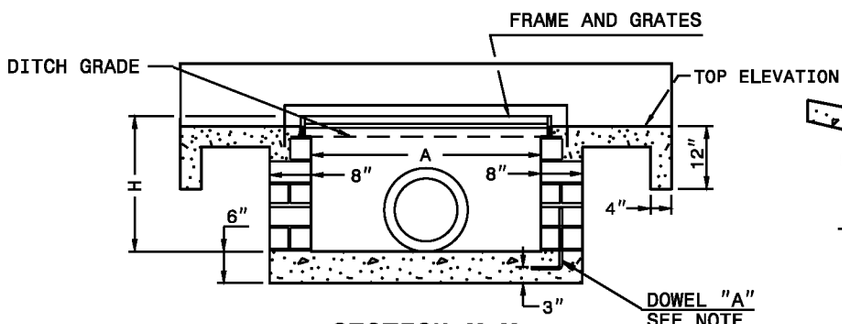

SECTION X-X

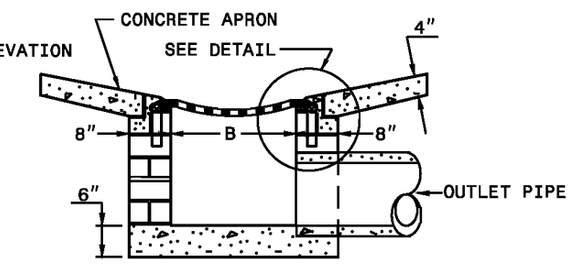

MAX. PIPE THIS SIDE - 18"

SECTION Y-Y

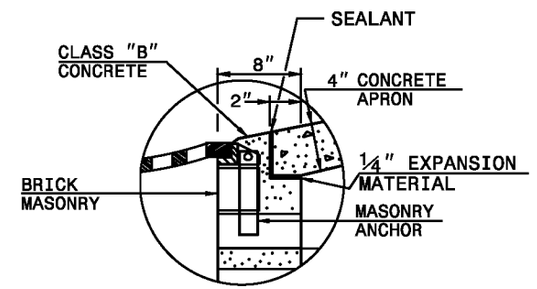

DETAIL

(APRON SUPPORT NOTCH)

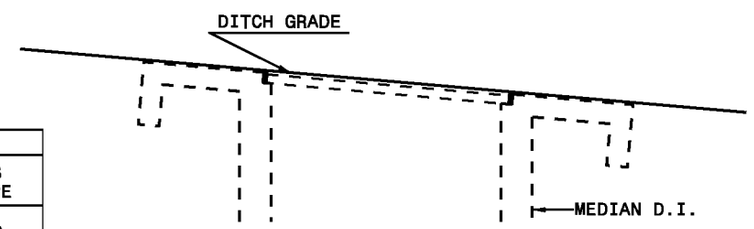

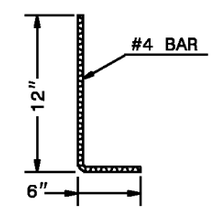

DOWEL "A"

MINIMUM DIMENSIONS AND QUANTITIES FOR BRICK GRATED DROP INLET									
PIPE	SPAN	WIDTH	HEIGHT	CU. YD. OF CONC IN BOX	CU. YD. OF BRICK MASONRY IN BOX		TOTAL CU. YD. IN BOX	DEDUCTIONS FOR ONE PIPE	
D	A	B	H	BOTTOM SLAB	H PER FT. HT.	TOTAL H		C.S.	R.C.
12"	3'-8"	2'-0"	1'-8"	0.309	0.346	0.548	0.857	0.020	0.032
15"	3'-8"	2'-0"	1'-11"	0.309	0.346	0.634	0.943	0.023	0.036
18"	3'-8"	2'-0"	2'-2"	0.309	0.346	0.721	1.030	0.033	0.049
24"	3'-8"	2'-0"	2'-8"	0.309	0.346	0.923	1.232	0.059	0.085
30"	3'-8"	2'-0"	3'-2"	0.309	0.346	1.096	1.405	0.092	0.127
36"	3'-8"	2'-0"	3'-8"	0.309	0.346	1.269	1.578	0.132	0.178

STATE OF
NORTH CAROLINA
DEPT. OF TRANSPORTATION
DIVISION OF HIGHWAYS
RALEIGH, N.C.

1-12

ENGLISH STANDARD DRAWING FOR

BRICK GRATED DROP INLET TYPE 'D'

12" THRU 36" PIPE

SHEET 1 OF 1

840.28

STATE OF
NORTH CAROLINA
DEPT. OF TRANSPORTATION
DIVISION OF HIGHWAYS
RALEIGH, N.C.

1-12

ENGLISH STANDARD DRAWING FOR

FRAMES AND NARROW SLOT FLAT GRATES

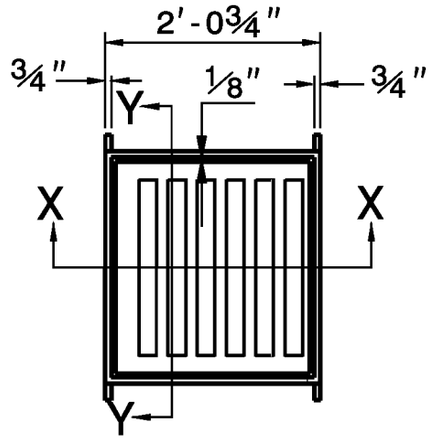

PLAN

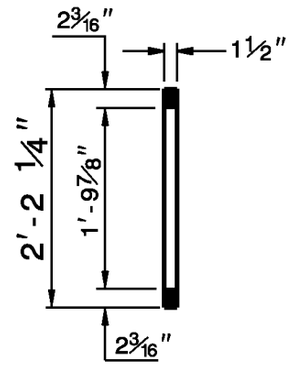

GRATE ELEVATION Y-Y

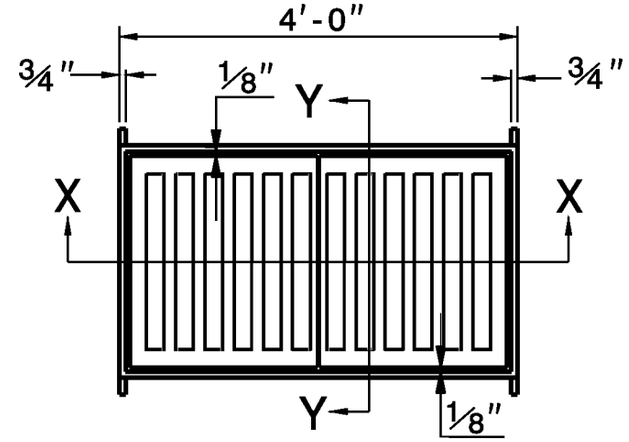

PLAN

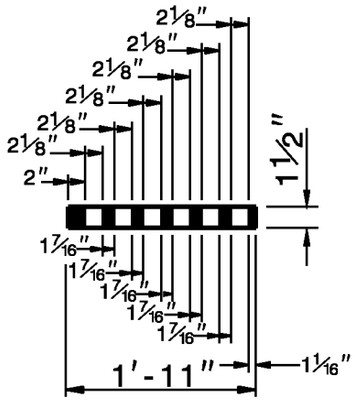

GRATE ELEVATION X-X

NOTE:
SEE STD. DWG. 840.25
FOR FRAME ANCHORAGE.

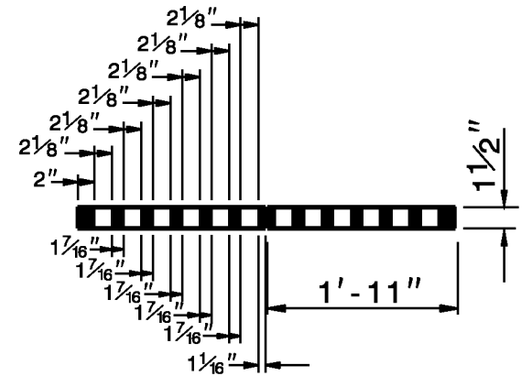

GRATE SECTION X-X

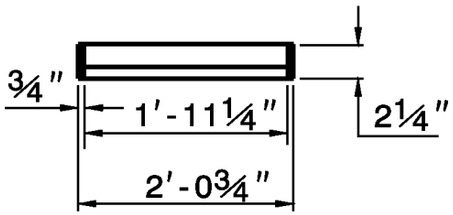

FRAME ELEVATION X-X

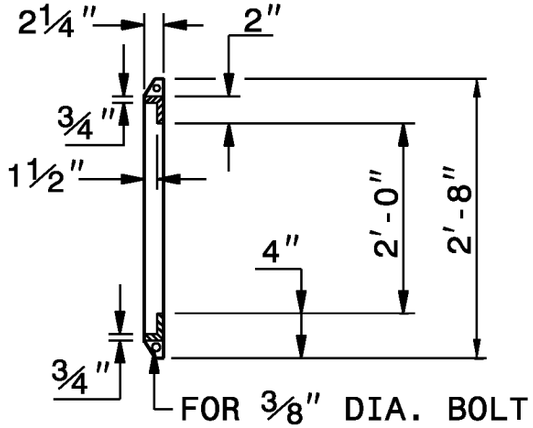

FRAME ELEVATION Y-Y

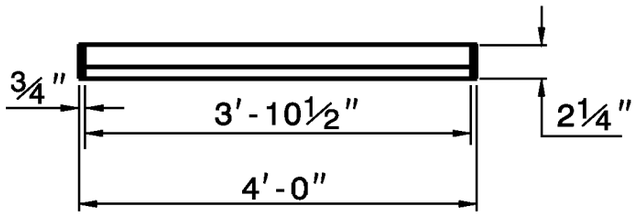

FRAME SECTION X-X

SHEET 1 OF 1

840.29

STATE OF
NORTH CAROLINA
DEPT. OF TRANSPORTATION
DIVISION OF HIGHWAYS
RALEIGH, N.C.

1-12

ENGLISH STANDARD DRAWING FOR

FRAMES AND NARROW SLOT FLAT GRATES

SHEET 1 OF 1

840.29

STATE OF NORTH CAROLINA
DEPT. OF TRANSPORTATION
DIVISION OF HIGHWAYS
RALEIGH, N.C.

1-12

ENGLISH STANDARD DRAWING FOR

DRIVEWAY DROP INLET

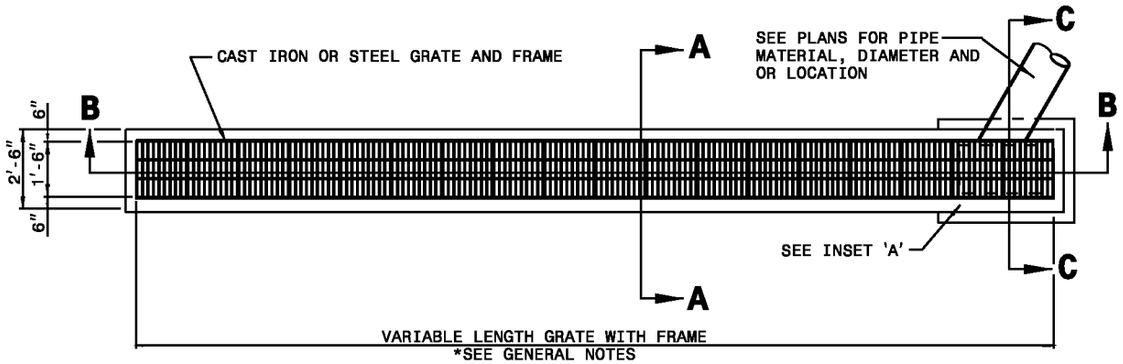

PLAN VIEW

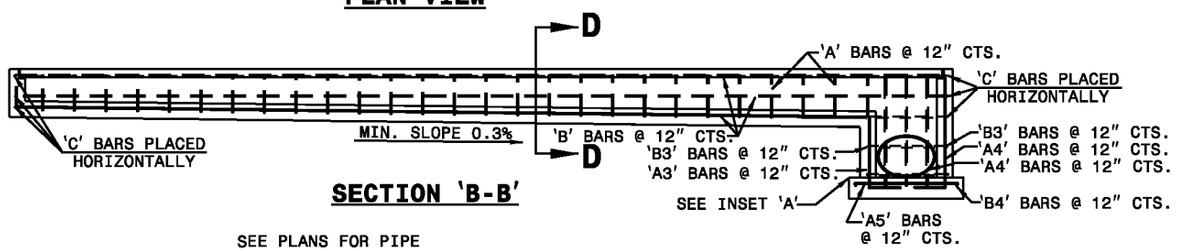

SECTION 'B-B'

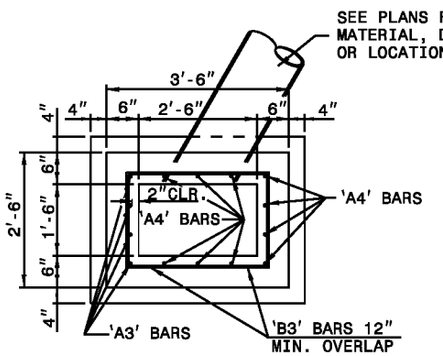

INSET 'A'

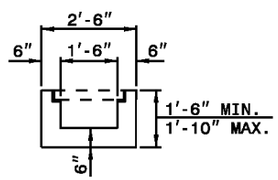

SECTION 'A-A'

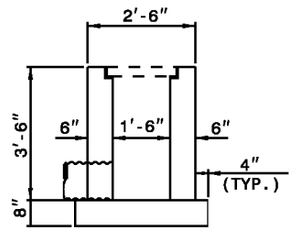

SECTION 'C-C'

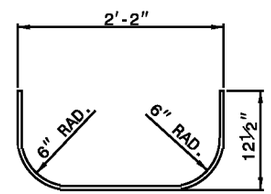

A

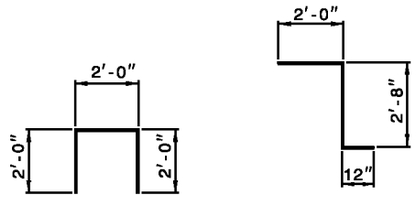

B3 A3 A4

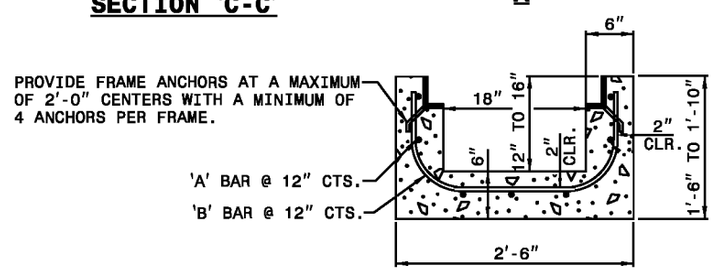

SECTION 'D-D'

GENERAL NOTES:

ALL MASONRY COMPONENTS OF THIS DRAINAGE DEVICE (EXCLUDING PIPE) ARE TO BE CONSTRUCTED WITH CLASS 'B' CONCRETE AND PAID FOR AT THE CONTRACT UNIT PRICE PER EACH FOR MASONRY DRAINAGE STRUCTURES.

* PAY FOR THE GRATE AND FRAME FOR THE DRIVEWAY DROP INLET AT THE CONTRACT UNIT PRICE PER LINEAR FOOT FOR GRATE WITH FRAME, DRIVEWAY DROP INLET. FABRICATE THE GRATE SECTION(S) TO FIT THE OPENING INDICATED IN THE PLANS.

THE CONTRACTOR MAY, AT HIS OPTION, SHORTEN LENGTHS FOR BARS 'B' AND LAP THEM TO OBTAIN THE PROPER LENGTH OF BARS. DO NOT OVERLAP BARS LESS THAN 1'-6" LONG.

INCLUDE THE COST OF ALL REINFORCING STEEL IN THE CONTRACT UNIT PRICE PER EACH FOR MASONRY DRAINAGE STRUCTURES.

DESIGN THE GRATES TO MEET HS-20 LOADING.

PROVIDE GRATES WITH A MINIMUM CLEAR WATERWAY OPENING OF 50in^2 PER 1'-0" LENGTH OF GRATE.

ADDITIONAL PER LINEAR FOOT QUANTITIES MAY BE USED TO ADJUST QUANTITIES FOR LENGTH INCREASE OR DECREASE AS INDICATED BY THE PLANS (SEE CHART BELOW).

BILL OF MATERIAL

QUANTITIES BASED ON 30' GRATE LENGTH

BAR	NO.	SIZE	LENGTH	WEIGHT
A	28	5	3'-11"	114.4
A3	4	5	5'-8"	23.6
A4	10	5	5'-0"	52.2
A5	4	5	3'-10"	16.0
B	7	5	30'-0"	219.0
B3	6	5	6'-0"	37.5
B4	5	5	2'-10"	14.8
C	6	5	2'-0"	12.5
TOTAL REINF. STEEL lbs.				490.0
CLASS 'B' CONC. cu. yds.				3.30
ADDITIONAL CONCRETE PER FT. IN CU. YDS. OVER 3'-6"				0.22
PER LINEAR FOOT QUANTITY ADJUSTMENTS FOR DRAINAGE STRUCTURES DEVIATING FROM THE 30' GRATE LENGTH				
A	1	5	3'-11"	4.1
B	7	5	1'-0"	7.3
CLASS 'B' CONC. cu. yds.				0.10

STATE OF NORTH CAROLINA
DEPT. OF TRANSPORTATION
DIVISION OF HIGHWAYS
RALEIGH, N.C.

1-12

ENGLISH STANDARD DRAWING FOR

DRIVEWAY DROP INLET

SHEET 1 OF 1
840.30

STATE OF
NORTH CAROLINA
DEPT. OF TRANSPORTATION
DIVISION OF HIGHWAYS
RALEIGH, N.C.

1-12

ENGLISH STANDARD DRAWING FOR

CONCRETE JUNCTION BOX

(WITH OPTIONAL MANHOLE)

12" THRU 66" PIPE

SHEET 1 OF 1

840.31

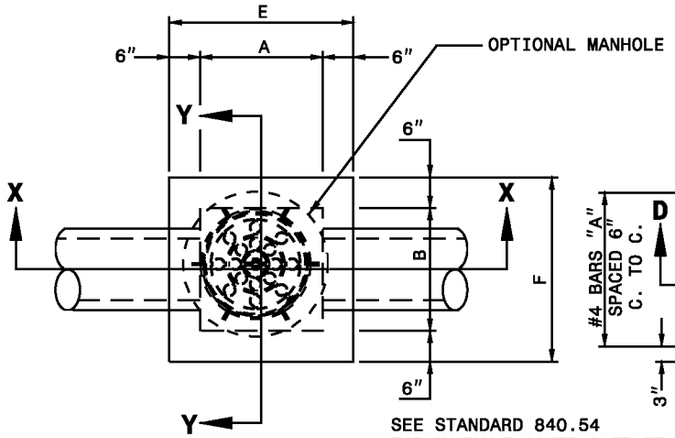

PLAN

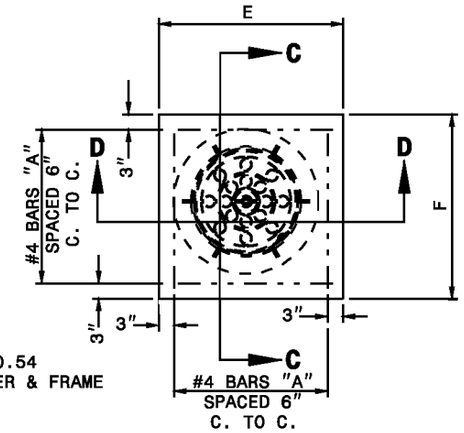

GENERAL NOTES:

CHAMFER ALL EXPOSED CORNERS 1".

USE CLASS "B" CONCRETE THROUGHOUT.

OPTIONAL CONSTRUCTION - MONOLITHIC POUR, 2" KEYWAY, OR #4 BAR DOWELS AT 12" CENTERS AS DIRECTED BY THE ENGINEER.

USE FORMS TO CONSTRUCT THE BOTTOM SLAB.

IF REINFORCED CONCRETE PIPE IS SET IN BASE SLAB OF BOX, ADD TO BASE AS SHOWN ON STANDARD NO. 840.00.

PROVIDE ALL JUNCTION BOXES OVER 3'-6" IN DEPTH WITH STEPS 12" ON CENTERS IN ACCORDANCE WITH STD. NO. 840.66.

ADJUST THE STEEL, CONCRETE AND BRICK MASONRY QUANTITIES TO INCLUDE THE ADDITION OF THE MANHOLE (I.E. DIAGONAL BARS SHORTENED AROUND OPENING IN TOP SLAB, ADDITIONAL VARIABLE HEIGHT BRICK MASONRY, OPENING IN TOP SLAB.)

MAX. DEPTH OF THIS STRUCTURE FROM TOP OF BOTTOM SLAB TO TOP ELEVATION IS 12 FEET.

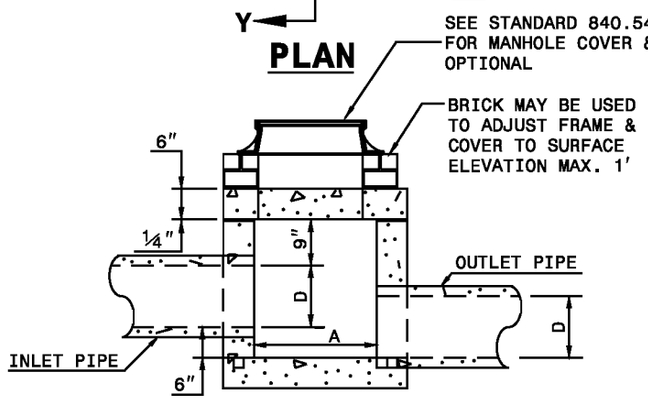

SECTION X-X

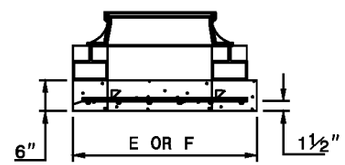

SECTION C-C OR D-D

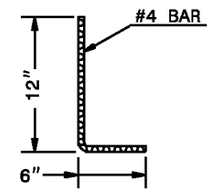

DOWEL

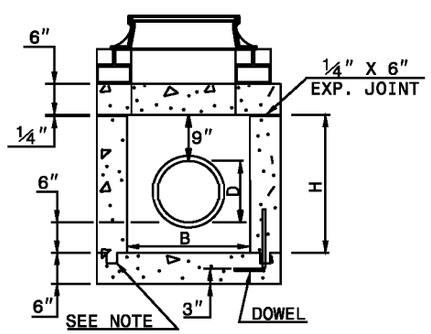

SECTION Y-Y

DIMENSIONS AND QUANTITIES FOR CONCRETE JUNCTION BOXES

DIMENSIONS OF BOX AND PIPE				REINFORCEMENT BARS "A"		TOP SLAB DIMENSIONS		CUBIC YARDS IN BOX			TOTAL QUANTITIES BOX AND SLABS		DEDUCTIONS FOR ONE PIPE CU.YDS.	
PIPE	SPAN	WIDTH	HEIGHT											
D	A	B	H	NO.	LENGTH	E	F	TOP SLAB	BOTTOM SLAB	WALL/ FT. OF HT.	LBS. REINF	CU. YDS. MIN. "H"	C.S.	R.C.
12"	2'-0"	2'-0"	2'-3"	12	2'-9"	3'-0"	3'-0"	0.167	0.167	0.185	22	0.750	0.015	0.024
15"	2'-3"	2'-3"	2'-6"	12	3'-0"	3'-3"	3'-3"	0.196	0.196	0.204	24	0.902	0.023	0.036
18"	2'-6"	2'-6"	2'-9"	14	3'-3"	3'-6"	3'-6"	0.227	0.227	0.222	30	1.065	0.033	0.049
24"	3'-0"	3'-0"	3'-3"	16	3'-9"	4'-0"	4'-0"	0.296	0.296	0.259	40	1.434	0.059	0.085
30"	3'-6"	3'-6"	3'-9"	18	4'-3"	4'-6"	4'-6"	0.375	0.375	0.296	51	1.860	0.092	0.127
36"	4'-0"	4'-0"	4'-3"	20	4'-9"	5'-0"	5'-0"	0.463	0.463	0.333	64	2.341	0.132	0.178
42"	4'-6"	4'-6"	4'-9"	22	5'-3"	5'-6"	5'-6"	0.560	0.560	0.370	77	2.878	0.180	0.243
48"	5'-4"	5'-4"	5'-3"	26	6'-3"	6'-4"	6'-4"	0.743	0.743	0.407	111	3.623	0.235	0.317
54"	5'-10"	5'-10"	5'-9"	28	6'-7"	6'-10"	6'-10"	0.865	0.865	0.444	126	4.283	0.297	0.401
60"	6'-6"	6'-6"	6'-3"	30	7'-3"	7'-6"	7'-6"	1.042	1.042	0.481	145	5.090	0.367	0.495
66"	7'-1"	7'-1"	6'-9"	32	7'-10"	8'-1"	8'-1"	1.210	1.210	0.518	169	5.917	0.444	0.589

1-12

STATE OF
NORTH CAROLINA
DEPT. OF TRANSPORTATION
DIVISION OF HIGHWAYS
RALEIGH, N.C.

ENGLISH STANDARD DRAWING FOR

CONCRETE JUNCTION BOX

(WITH OPTIONAL MANHOLE)

12" THRU 66" PIPE

SHEET 1 OF 1

840.31

STATE OF
NORTH CAROLINA
DEPT. OF TRANSPORTATION
DIVISION OF HIGHWAYS
RALEIGH, N.C.

1-12

ENGLISH STANDARD DRAWING FOR

BRICK JUNCTION BOX

(WITH OPTIONAL MANHOLE)

12" THRU 66" PIPE

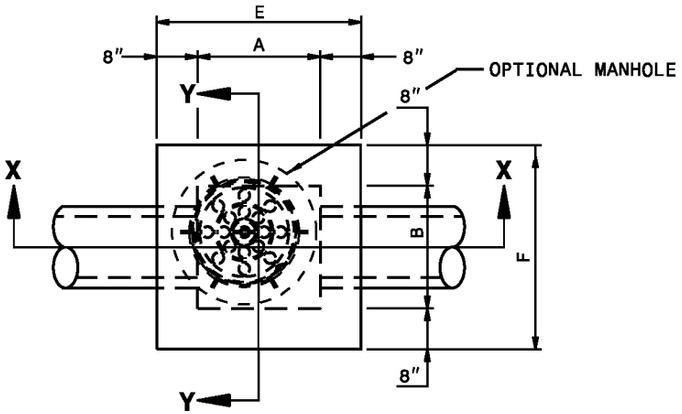

PLAN

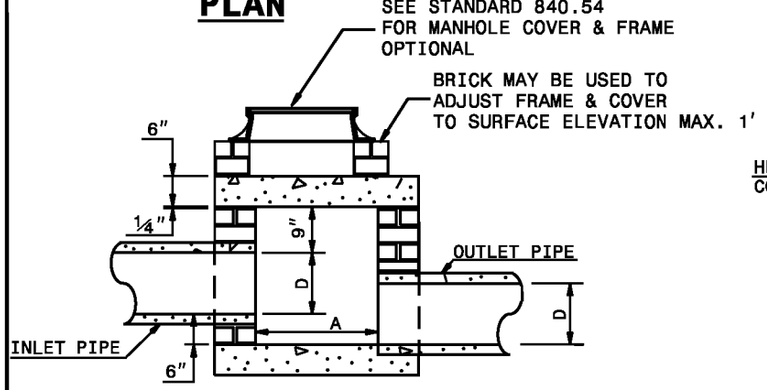

SECTION X-X

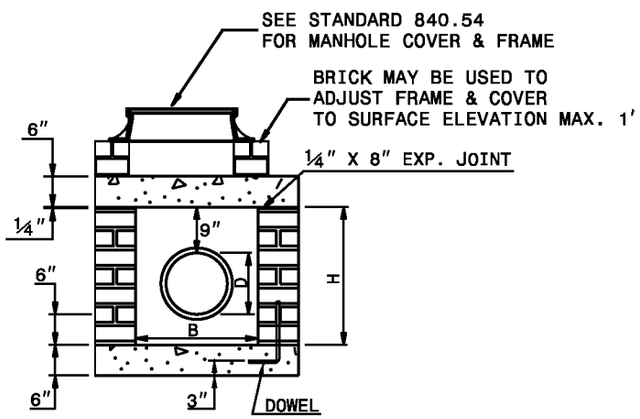

SECTION Y-Y

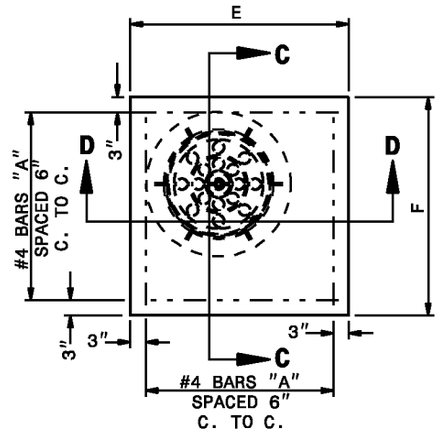

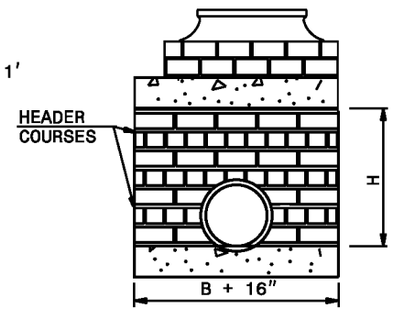

OUTLET ELEVATION

GENERAL NOTES:

CHAMFER ALL EXPOSED CORNERS 1".

USE CLASS "B" CONCRETE THROUGHOUT.

USE #4 BAR DOWELS AT 12" CENTERS.

MORTAR JOINTS ½" ± ⅛" THICK.

CONCAVE TOO ALL EXPOSED JOINTS.

USE FORMS TO CONSTRUCT THE BOTTOM SLAB.

JUMBO BRICK WILL BE PERMITTED. CONCRETE BRICK OR 4" SOLID CONCRETE BLOCKS MAY BE USED IN LIEU OF CLAY BRICK.

FOR 8'-0" IN HEIGHT OR LESS, USE 8" WALL. OVER 8'-0" IN HEIGHT, USE 12" WALL TO 6'-0" FROM TOP OF WALL, AND 8" WALL FOR THE REMAINING 6'-0". ADJUST DIMENSIONS AND QUANTITIES ACCORDINGLY.

IF REINFORCED CONCRETE PIPE IS SET IN BASE SLAB OF BOX, ADD TO BASE AS SHOWN ON STANDARD NO. 840.00.

PROVIDE ALL JUNCTION BOXES OVER 3'-6" IN DEPTH WITH STEPS 12" ON CENTERS IN ACCORDANCE WITH STD. NO. 840.66.

ADJUST THE STEEL, CONCRETE AND BRICK MASONRY QUANTITIES TO INCLUDE THE ADDITION OF THE MANHOLE (I.E. DIAGONAL BARS SHORTENED AROUND OPENING IN TOP SLAB, ADDITIONAL VARIABLE HEIGHT BRICK MASONRY, OPENING IN TOP SLAB.)

MAX. DEPTH OF THIS STRUCTURE FROM TOP OF BOTTOM SLAB TO TOP ELEVATION IS 12 FEET.

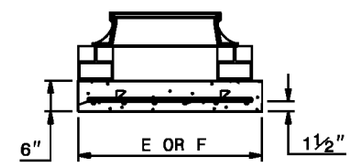

SECTION C-C OR D-D

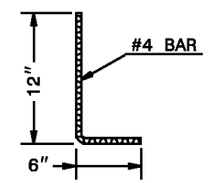

DOWEL

DIMENSIONS AND QUANTITIES FOR BRICK JUNCTION BOXES

DIMENSIONS OF BOX AND PIPE				REINFORCEMENT BARS		TOP SLAB DIMENSIONS		CUBIC YARDS			DEDUCTIONS FOR ONE PIPE CU.YDS.	
PIPE	SPAN	WIDTH	HEIGHT					CONC.	BRICK MASONRY			
D	A	B	H	NO.	LENGTH	E	F	TOP & BOTTOM CU. YD.	MIN. HEIGHT CU. YD.	WALL PER FT. HT. CU. YD.	C.S.	R.C.
12"	2'-0"	2'-0"	2'-3"	12	3'-1"	3'-4"	3'-4"	0.412	0.591	0.263	0.020	0.032
15"	2'-0"	2'-0"	2'-6"	12	3'-1"	3'-4"	3'-4"	0.412	0.657	0.263	0.031	0.047
18"	2'-4"	2'-4"	2'-9"	14	3'-5"	3'-8"	3'-8"	0.498	0.814	0.296	0.044	0.065
24"	3'-0"	3'-0"	3'-3"	16	4'-1"	4'-4"	4'-4"	0.695	1.176	0.362	0.078	0.113
30"	3'-4"	3'-4"	3'-9"	16	4'-5"	4'-8"	4'-8"	0.807	1.481	0.395	0.122	0.170
36"	4'-0"	4'-0"	4'-3"	20	5'-1"	5'-4"	5'-4"	1.053	1.959	0.461	0.176	0.238
42"	4'-8"	4'-8"	4'-9"	22	5'-9"	6'-0"	6'-0"	1.333	2.503	0.527	0.240	0.323
48"	5'-4"	5'-4"	5'-3"	26	6'-5"	6'-8"	6'-8"	1.646	2.940	0.560	0.313	0.422
54"	5'-10"	5'-10"	5'-9"	28	6'-11"	7'-2"	7'-2"	1.902	3.502	0.609	0.396	0.535
60"	6'-6"	6'-6"	6'-3"	30	7'-7"	7'-10"	7'-10"	2.272	4.113	0.658	0.489	0.660
66"	7'-1"	7'-1"	6'-9"	32	8'-2"	8'-5"	8'-5"	2.624	4.778	0.708	0.591	0.798

STATE OF
NORTH CAROLINA
DEPT. OF TRANSPORTATION
DIVISION OF HIGHWAYS
RALEIGH, N.C.

1-12

ENGLISH STANDARD DRAWING FOR

BRICK JUNCTION BOX

(WITH OPTIONAL MANHOLE)

12" THRU 66" PIPE

SHEET 1 OF 1
840.32

STATE OF
NORTH CAROLINA
DEPT. OF TRANSPORTATION
DIVISION OF HIGHWAYS
RALEIGH, N.C.

1-12

ENGLISH STANDARD DRAWING FOR

ANGLED VANE GRATES AND FRAMES

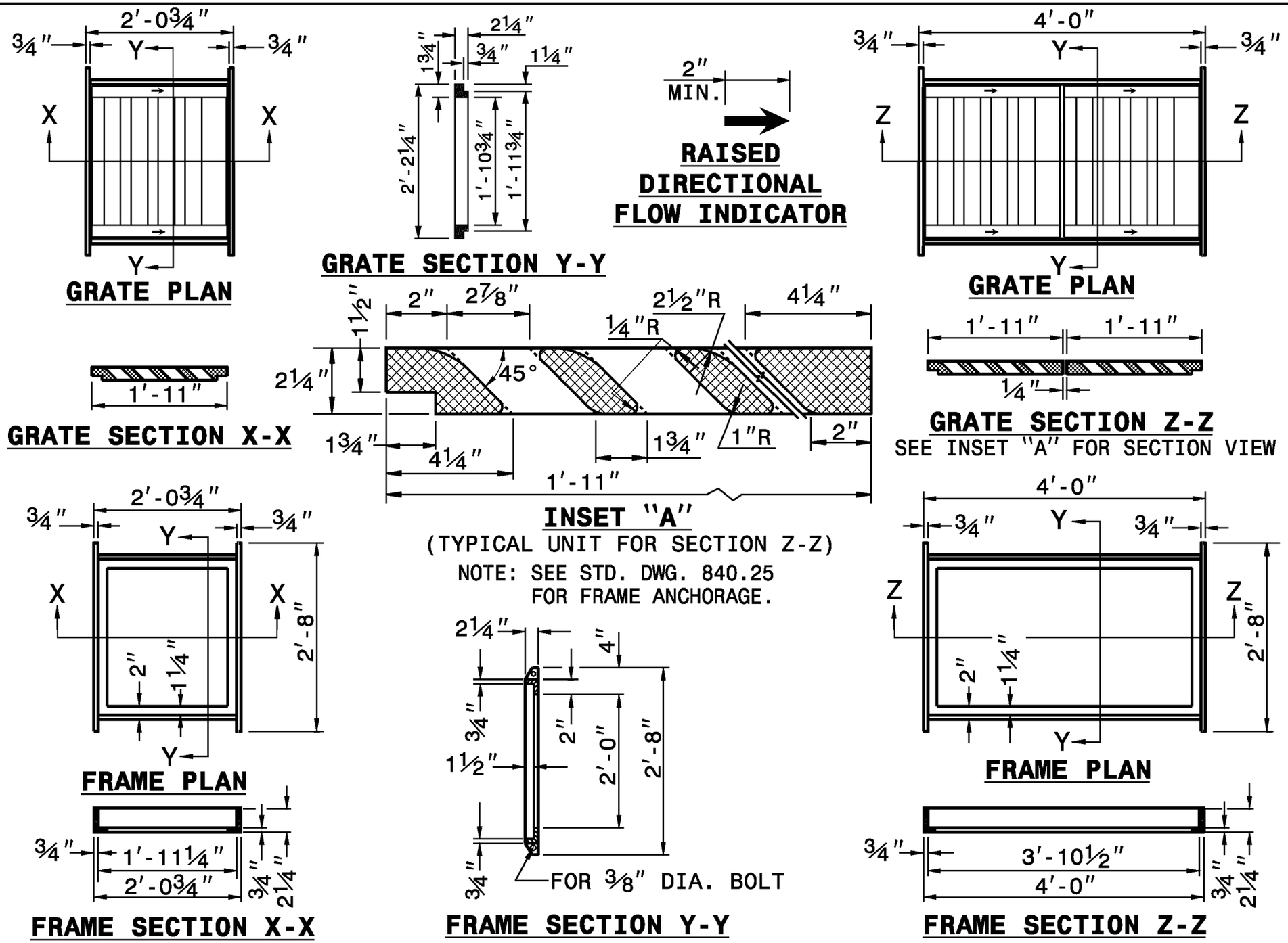

SHEET 1 OF 1

840.33

STATE OF
NORTH CAROLINA
DEPT. OF TRANSPORTATION
DIVISION OF HIGHWAYS
RALEIGH, N.C.

1-12

ENGLISH STANDARD DRAWING FOR

ANGLED VANE GRATES AND FRAMES

SHEET 1 OF 1

840.33

STATE OF
NORTH CAROLINA
DEPT. OF TRANSPORTATION
DIVISION OF HIGHWAYS
RALEIGH, N.C.

1-12

ENGLISH STANDARD DRAWING FOR

TRAFFIC BEARING JUNCTION BOX

FOR USE WITH PIPES 42" AND UNDER

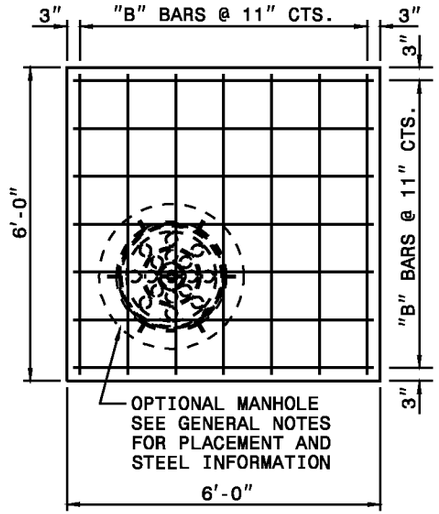

PLAN OF TOP SLAB

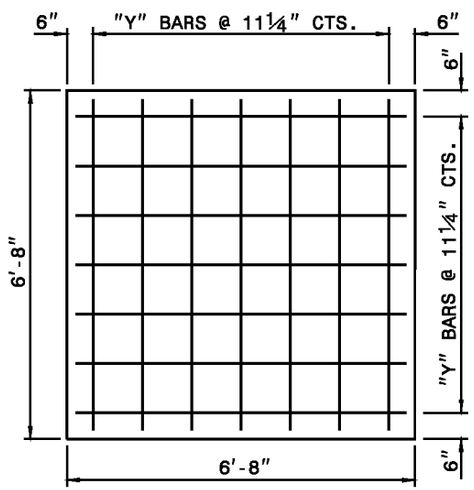

PLAN OF BOTTOM SLAB

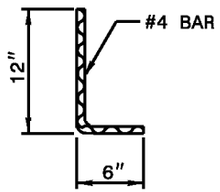

DOWEL "C"

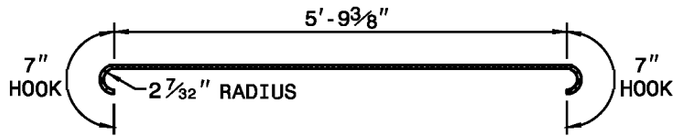

"Y" BARS

BAR DIMENSIONS ARE OUT TO OUT

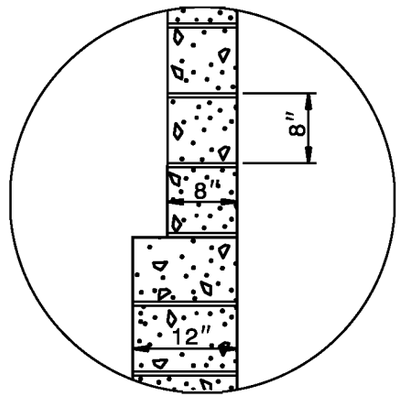

INSET "A"

CONCRETE BLOCK

NOTE 1: CONSTRUCT SECTION "B" OF THE PROPOSED WALL 8" THICK. AND SECTION "A" 12" THICK.

NOTE 2: IF PROPOSED STRUCTURE EXCEEDS 12'-0" VERTICAL HEIGHT A DESIGN WILL BE REQUIRED FOR APPROVAL.

NOTE 3: USE SINGLE MAT REINFORCING STEEL; EXCEPT DOUBLE MAT STEEL MAY BE USED IN LIEU OF HOOK BARS IN BASE SLAB.

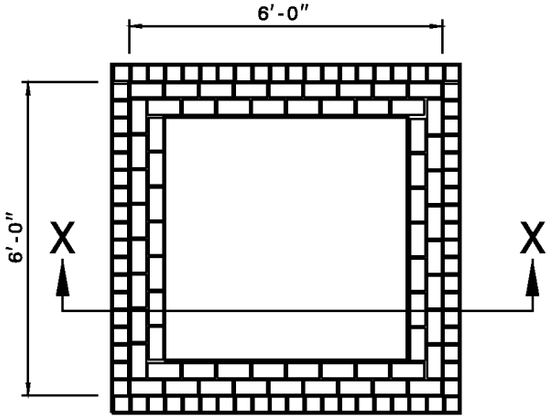

PLAN

(WITHOUT TOP)

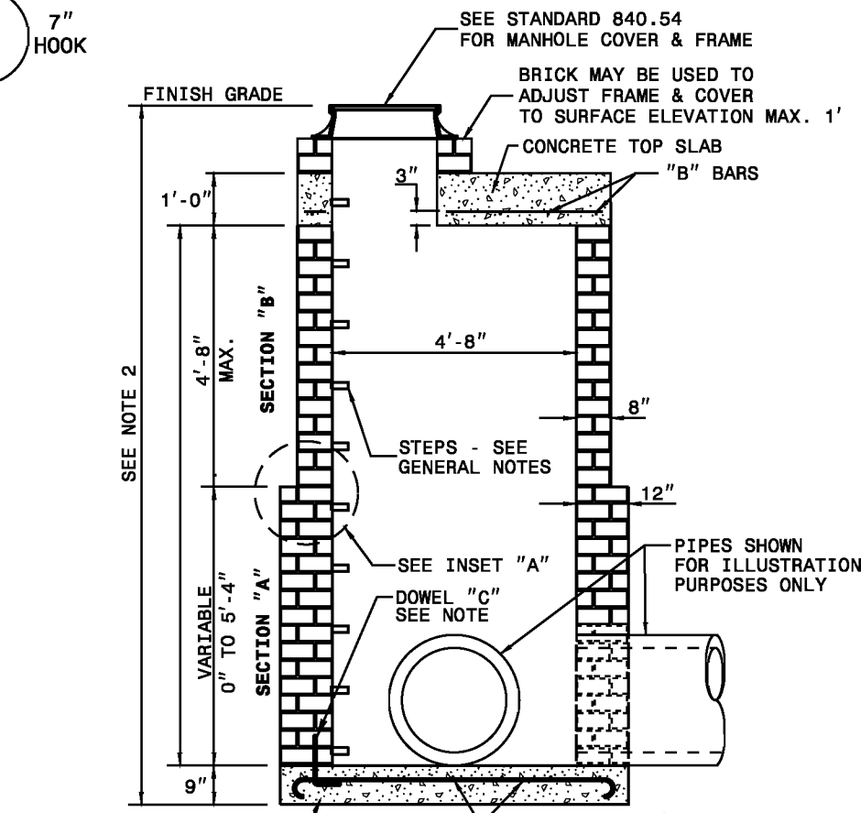

SECTION X-X

(WITH TOP)

STATE OF
NORTH CAROLINA
DEPT. OF TRANSPORTATION
DIVISION OF HIGHWAYS
RALEIGH, N.C.

1-12

ENGLISH STANDARD DRAWING FOR

TRAFFIC BEARING JUNCTION BOX

FOR USE WITH PIPES 42" AND UNDER

SHEET 1 OF 2

840.34

SHEET 1 OF 2

840.34

STATE OF
NORTH CAROLINA
DEPT. OF TRANSPORTATION
DIVISION OF HIGHWAYS
RALEIGH, N.C.

1-12

ENGLISH STANDARD DRAWING FOR

TRAFFIC BEARING JUNCTION BOX

FOR USE WITH PIPES 42" AND UNDER

GENERAL NOTES:

USE STANDARD OR JUMBO BRICK FOR WALL CONSTRUCTION. SOLID CONCRETE BRICK OR BLOCK ARE OPTIONAL WALL CONSTRUCTION MATERIAL

PRECAST UNITS MADE OF CLASS "AA" CONCRETE MAY BE USED IN LIEU OF BRICK MASONRY CONTRUCTION. SUBMIT DESIGN OF PRECAST UNITS FOR APPROVAL PRIOR TO CONSTRUCTION.

INCLUDE ALL ADJUSTMENTS TO WALLS, SLABS OR REINFORCING MATERIAL IN THE UNIT PRICE BID FOR EACH UNIT.

INSTALL OPTIONAL MANHOLE IN POSITION AS DIRECTED BY THE ENGINEER. CUT OR BEND ALL REBAR CROSSING THIS OPENING TO ALLOW 2" MINIMUM CONCRETE COVERAGE. ENCLOSE THE OPENING WITH 8 "A" BARS TIED TO TO THE REBAR MAT AND SET SO A MINIMUM OF 3" CONCRETE COVER IS ATTAINED. REFERENCE STD. NO. 840.54 FOR MANHOLE INFORMATION.

PROVIDE JUNCTION BOXES WITH MAHNOLES OVER 3'-6" IN DEPTH WITH STEPS PLACED ON 12" CENTERS. REFERENCE STD. NO. 840.66.

SPACE DOWEL "C" BARS AT A MAXIMUM OF 12" CENTERS.

MAXIMUM DEPTH OF THIS UNIT AS SHOWN IS 12'.

CONSTRUCT THE JUNCTION BOX IN ACCORDANCE WITH SECTIONS 830, 832, 834 AND 840 OF THE STANDARD SPECIFICATIONS.

BILL OF MATERIAL

BAR	QTY.	SIZE	LENGTH	WEIGHT
A	8	#5	1'-2"	9.7
B	14	#5	5'-6"	80.3
C	26	#4	1'-6"	26.1
Y	14	#5	6'-11 3/8"	101.5
STEEL TOTAL WEIGHT				217.6
CU. YDS. CLASS "AA" CONC.				2.6
CU. YDS. BRICK/FT. HT. (8")				0.53
CU. YDS. BRICK/FT. HT. (12")				0.84

STATE OF
NORTH CAROLINA
DEPT. OF TRANSPORTATION
DIVISION OF HIGHWAYS
RALEIGH, N.C.

1-12

ENGLISH STANDARD DRAWING FOR

TRAFFIC BEARING JUNCTION BOX

FOR USE WITH PIPES 42" AND UNDER

SHEET 2 OF 2
840.34

STATE OF
NORTH CAROLINA
DEPT. OF TRANSPORTATION
DIVISION OF HIGHWAYS
RALEIGH, N.C.

1-12

ENGLISH STANDARD DRAWING FOR

TRAFFIC BEARING GRATED DROP INLET

FOR CAST IRON DOUBLE FRAME AND GRATES

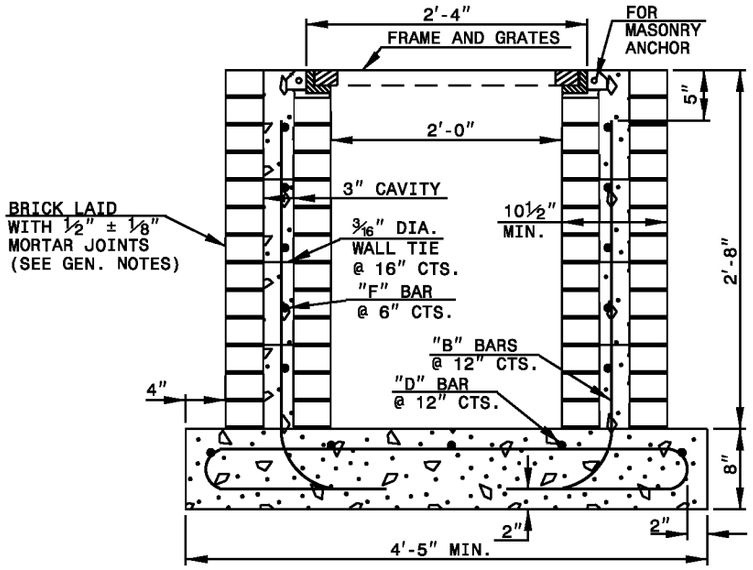

SECTION X-X

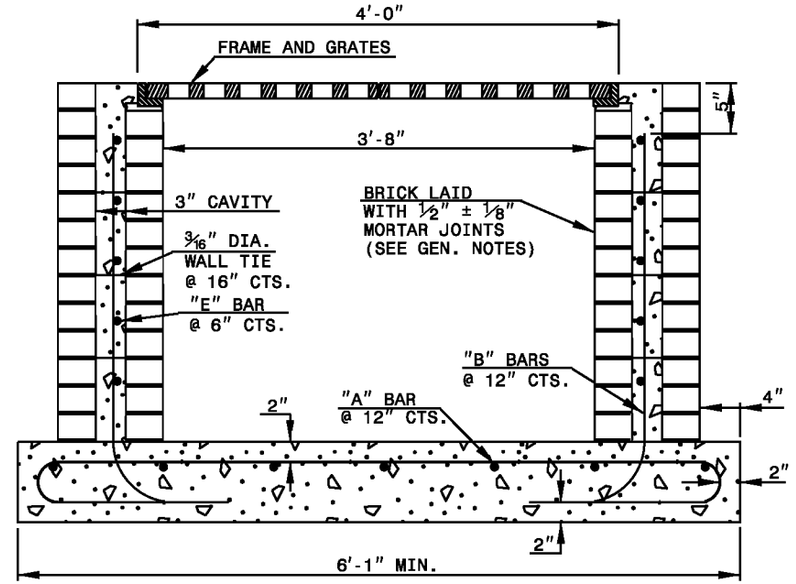

SECTION Y-Y

BRICK ALT.

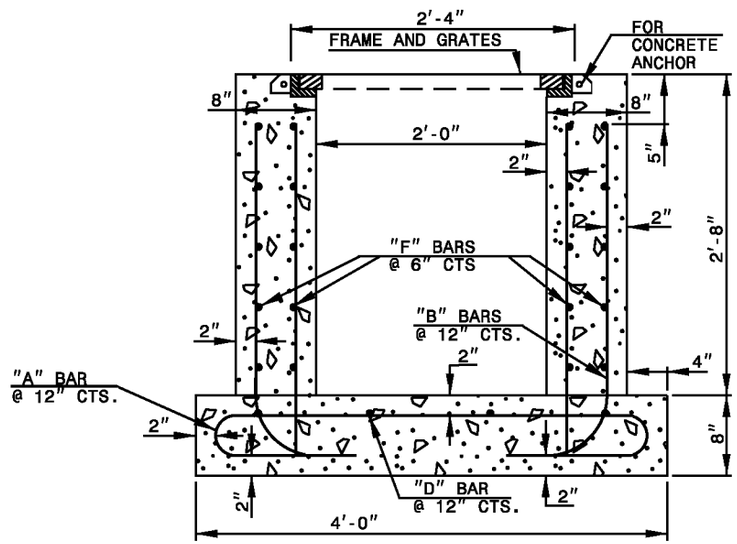

MAX. PIPE DIAMETER IS 18" R.C.P.

SECTION X-X

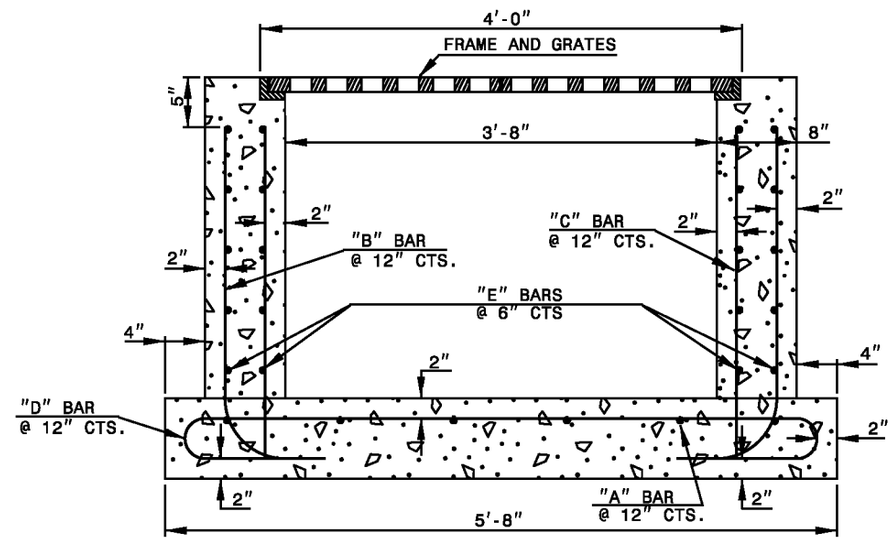

MAX. PIPE DIAMETER IS 36" R.C.P.

SECTION Y-Y

CONCRETE ALT.

NOTES:
- HORIZONTAL AND VERTICAL DIMENSIONS MAY BE ADJUSTED AS THE FIELD CONDITIONS AND/OR ALTERNATE DESIGN REQUIRE.
- MAXIMUM HEIGHT FOR THIS STRUCTURE IS 14'-0".
- MAKE ALL ADJUSTMENTS AS DIRECTED BY THE ENGINEER.
- DEPTH OF STEEL GRATE WILL REQIURE DEEPER SEAT ALONG SHORT WALLS.

SHEET 1 OF 2

840.35

STATE OF
NORTH CAROLINA
DEPT. OF TRANSPORTATION
DIVISION OF HIGHWAYS
RALEIGH, N.C.

1-12

ENGLISH STANDARD DRAWING FOR

TRAFFIC BEARING GRATED DROP INLET

FOR CAST IRON DOUBLE FRAME AND GRATES

SHEET 1 OF 2

840.35

STATE OF
NORTH CAROLINA
DEPT. OF TRANSPORTATION
DIVISION OF HIGHWAYS
RALEIGH, N.C.

1-12

ENGLISH STANDARD DRAWING FOR

TRAFFIC BEARING GRATED DROP INLET

FOR CAST IRON DOUBLE FRAME AND GRATES

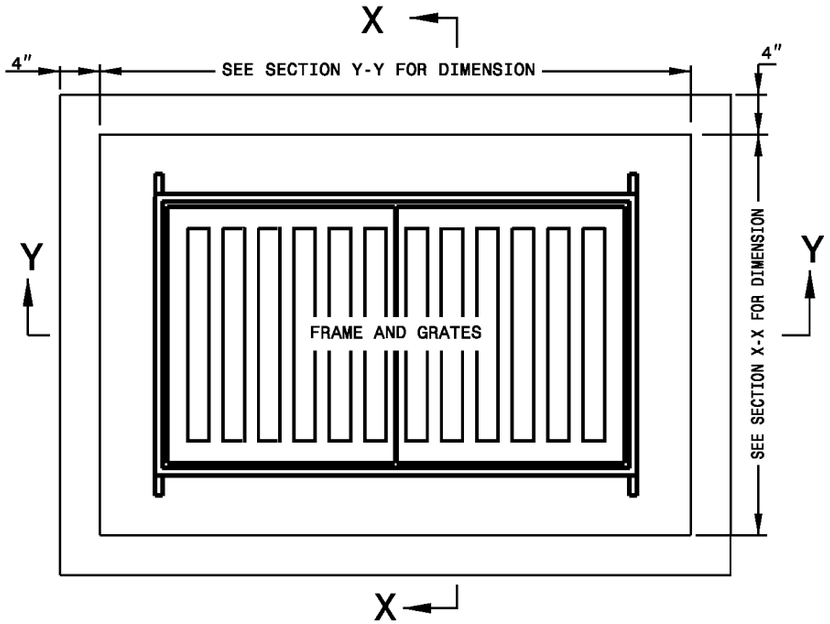

PLAN

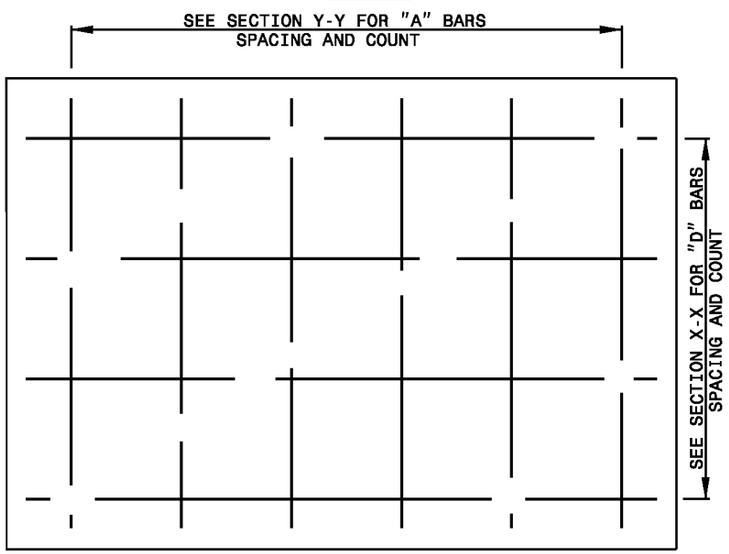

PLAN OF BASE

BILL OF MATERIALS

COMMON		CONCRETE ALT.			BRICK ALT.		
BAR	SIZE	LENGTH	QUANTITY	WEIGHT	LENGTH	QUANTITY	WEIGHT
A	#5	6'-4½"	6	39.9	7'-7½"	6	47.7
B	#5	3'-4½"	16	56.3	3'-4½"	16	56.3
C	#5	2'-8"	14	38.9	-0-	-0-	-0-
D	#5	8'-0½"	4	33.6	9'-3½"	4	38.8
E	#5	3'-0"	20	62.6	3'-0"	10	31.3
F	#5	4'-8"	20	97.3	4'-8"	10	48.7
REINF. STEEL (TOTAL WEIGHT LBS.)				328.6			222.8
CONCRETE IN BASE CLASS 'AA' (CUBIC YARDS)				0.56			0.66
CONCRETE IN WALLS CLASS 'AA' (CUBIC YARDS)				0.92			-0-
CONCRETE IN WALLS CLASS 'B' (CUBIC YARDS)				-0-			0.36
BRICK IN WALLS (CUBIC YARDS)				-0-			0.91
CONCRETE TOTAL (CUBIC YARDS)				1.48			1.02
BRICK & CONCRETE TOTAL (CUBIC YARDS)				1.48			1.93
CONC. CUBIC YARDS IN WALL/FOOT OF HEIGHT				0.35			0.14
BRICK CUBIC YARDS IN WALL/FOOT OF HEIGHT				-0-			0.34
LBS. OF REINF. STEEL IN WALL/FOOT OF HEIGHT				94.9			47.6

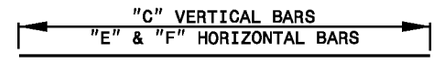

STRAIGHT BARS

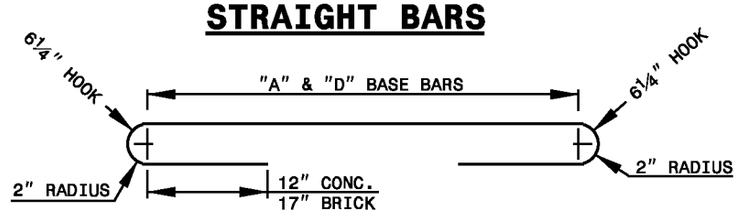

BASE BARS

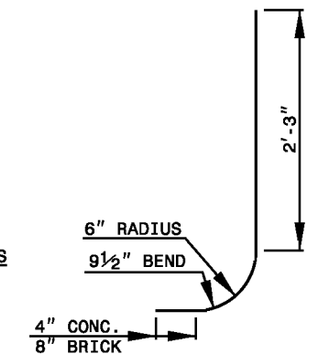

CORNER BARS

GENERAL NOTES:
- USE CLASS 'AA' CONCRETE FOR CAST IN PLACE CONCRETE BOX.
- USE CLASS 'B' CONCRETE IN THE WALL CAVITY FOR REINFORCED BRICK CONSTRUCTION AND CLASS 'AA' FOR THE FOOTING BASE.
- CHAMFER ALL EXPOSED CONCRETE CORNERS 1".
- USE FORMS TO CONSTRUCT THE BOTTOM SLAB.
- IF PIPES ARE SET IN THE BASE FOLLOW CONSTRUCTION PROCEDURES SHOWN BY STD. DWG. 840.00.
- PRECAST UNITS MADE OF CLASS 'AA' CONCRETE MAY BE USED IN LIEU OF BRICK MASONRY CONSTRUCTION.
- INCLUDE REINFORCING STEEL COST IN THE UNIT OR LINEAR FOOT BID PRICE FOR "MASONRY DRAINAGE STRUCTURE".
- REFERENCE STD. DWG. 840.25 FOR FRAME ANCHORAGE.
- CONCRETE BRICK, JUMBO BRICK AND 4" SOLID CONCRETE BLOCK WILL BE PERMITTED.
- CONCRETE FOR BRICK BOX REFER TO SECTION 832 OF THE STANDARD SPECIFICATIONS.
- PROVIDE GRATED DROP INLETS OVER 3'-6" DEEP WITH STEPS SPACED 12" ON CENTER AS DIRECTED BY STD. DWG. 840.66.
- FRAME AND GRATES ARE SEPARATE CONTRACT ITEMS.

STATE OF
NORTH CAROLINA
DEPT. OF TRANSPORTATION
DIVISION OF HIGHWAYS
RALEIGH, N.C.

1-12

ENGLISH STANDARD DRAWING FOR

TRAFFIC BEARING GRATED DROP INLET

FOR CAST IRON DOUBLE FRAME AND GRATES

SHEET 2 OF 2
840.35

STATE OF
NORTH CAROLINA
DEPT. OF TRANSPORTATION
DIVISION OF HIGHWAYS
RALEIGH, N.C.

1-12

ENGLISH STANDARD DRAWING FOR

TRAFFIC BEARING GRATED DROP INLET

FOR STEEL (840.37) DOUBLE FRAME AND GRATES

SHEET 1 OF 2

840.36

NOTES:
- HORIZONTAL AND VERTICAL DIMENSIONS MAY BE ADJUSTED AS THE FIELD CONDITIONS AND/OR ALTERNATE DESIGN REQUIRE.
- MAXIMUM HEIGHT FOR THIS STRUCTURE IS 14′-0″.
- MAKE ALL ADJUSTMENTS AS DIRECTED BY THE ENGINEER.
- ANCHOR STEEL FRAME AND GRATES IN ACCORDANCE WITH DETAILS SHOWN.
- NO BRICK RISERS ARE PERMITTED ON ANY PART OF THIS DRAINAGE STRUCTURE.

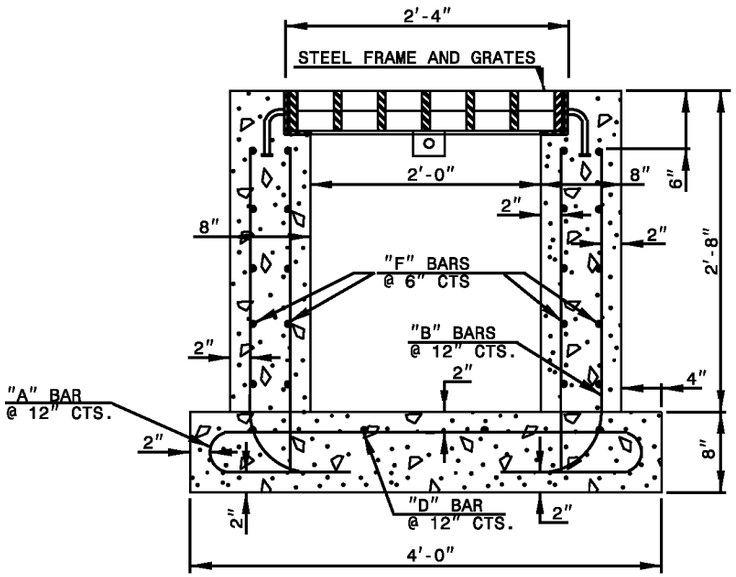

MAX. PIPE DIAMETER IS 18″ R.C.P.

SECTION X-X

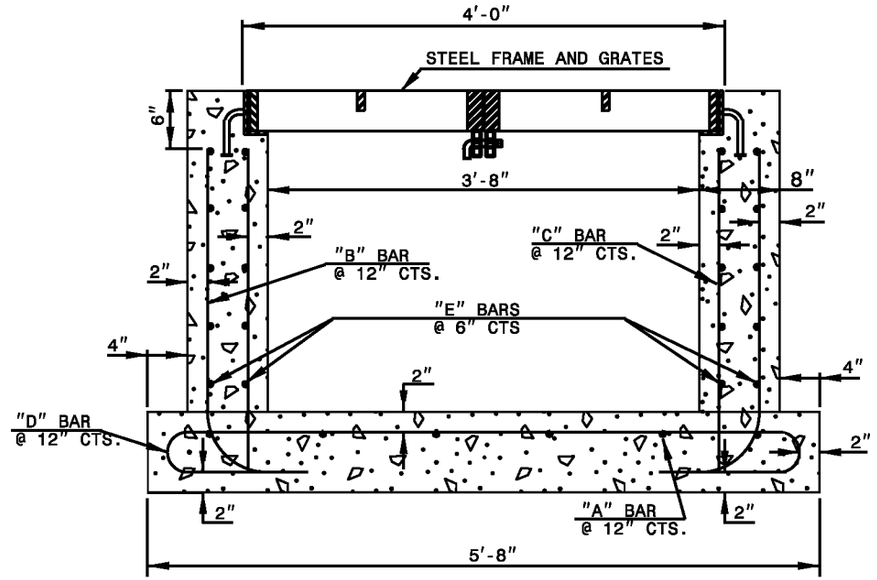

MAX. PIPE DIAMETER IS 36″ R.C.P.

SECTION Y-Y

TRAFFIC BEARING DROP INLET

STATE OF
NORTH CAROLINA
DEPT. OF TRANSPORTATION
DIVISION OF HIGHWAYS
RALEIGH, N.C.

1-12

ENGLISH STANDARD DRAWING FOR

TRAFFIC BEARING GRATED DROP INLET

FOR STEEL (840.37) DOUBLE FRAME AND GRATES

SHEET 1 OF 2

840.36

STATE OF
NORTH CAROLINA
DEPT. OF TRANSPORTATION
DIVISION OF HIGHWAYS
RALEIGH, N.C.

1-12

ENGLISH STANDARD DRAWING FOR

TRAFFIC BEARING GRATED DROP INLET

FOR STEEL (840.37) DOUBLE FRAME AND GRATES

SHEET 2 OF 2

840.36

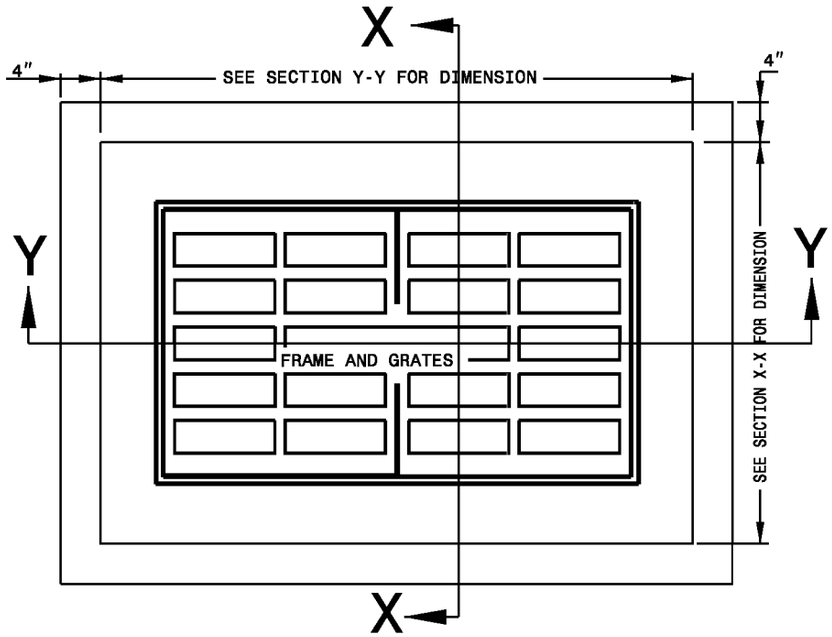

PLAN

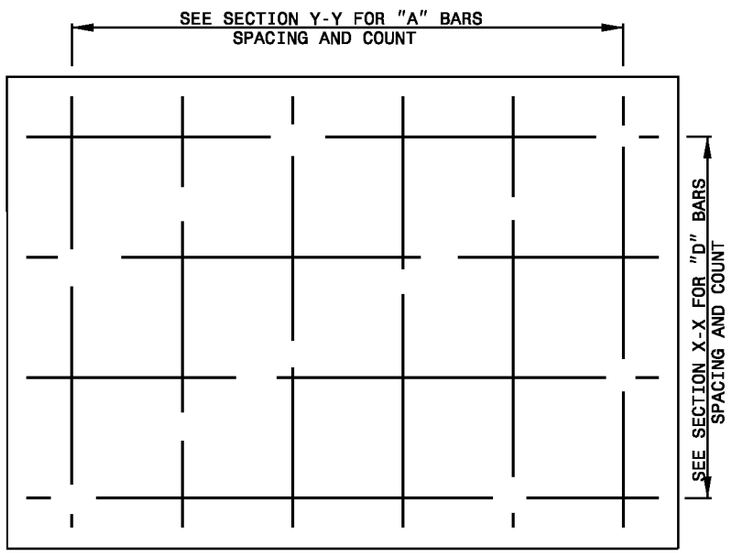

PLAN OF BASE

BILL OF MATERIALS				
COMMON		CONCRETE		
BAR	SIZE	LENGTH	QUANTITY	WEIGHT
A	#5	6'-4½"	6	39.9
B	#5	3'-3½"	16	54.9
C	#5	2'-8"	14	38.9
D	#5	8'-0½"	4	33.6
E	#5	3'-0"	20	62.6
F	#5	4'-8"	20	97.3
REINF. STEEL (TOTAL WEIGHT LBS.)				327.2
CONCRETE IN BASE (CUBIC YARDS)				0.56
CONCRETE IN WALLS (CUBIC YARDS)				0.92
CONCRETE TOTAL (CUBIC YARDS)				1.48
CONC. CUBIC YARDS IN WALL/FOOT OF HEIGHT				0.35
LBS. OF REINF. STEEL IN WALL/FOOT OF HEIGHT				94.9

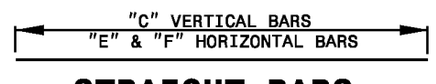

STRAIGHT BARS

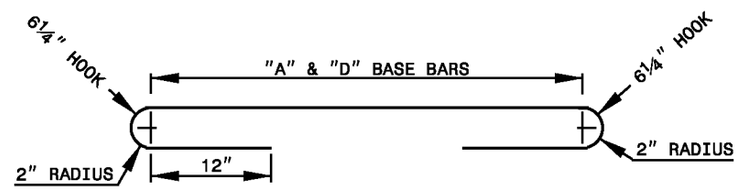

BASE BARS

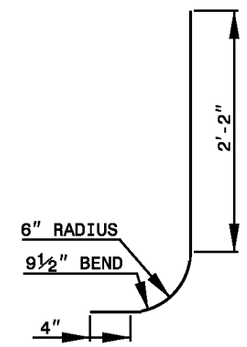

CORNER BARS

GENERAL NOTES:
- USE CLASS 'AA' CONCRETE FOR CAST IN PLACE BOX.
- CHAMFER ALL EXPOSED CONCRETE CORNERS 1".
- USE FORMS TO CONSTRUCT THE BOTTOM SLAB.
- IF PIPES ARE SET IN THE BASE FOLLOW CONSTRUCTION PROCEDURES SHOWN BY STD. DWG. 840.00.
- INCLUDE REINFORCING STEEL COST IN THE BID PRICE FOR "MASONRY DRAINAGE STRUCTURE".
- PROVIDE GRATED DROP INLETS OVER 3'-6" DEEP WITH STEPS SPACED 12" ON CENTER AS DIRECTED BY STD. DWG. 840.66.
- FRAME AND GRATES ARE SEPARATE CONTRACT ITEMS.

STATE OF
NORTH CAROLINA
DEPT. OF TRANSPORTATION
DIVISION OF HIGHWAYS
RALEIGH, N.C.

1-12

ENGLISH STANDARD DRAWING FOR

TRAFFIC BEARING GRATED DROP INLET

FOR STEEL (840.37) DOUBLE FRAME AND GRATES

SHEET 2 OF 2

840.36

STATE OF
NORTH CAROLINA
DEPT. OF TRANSPORTATION
DIVISION OF HIGHWAYS
RALEIGH, N.C.

1-12

ENGLISH STANDARD DRAWING FOR

STEEL GRATE AND FRAME

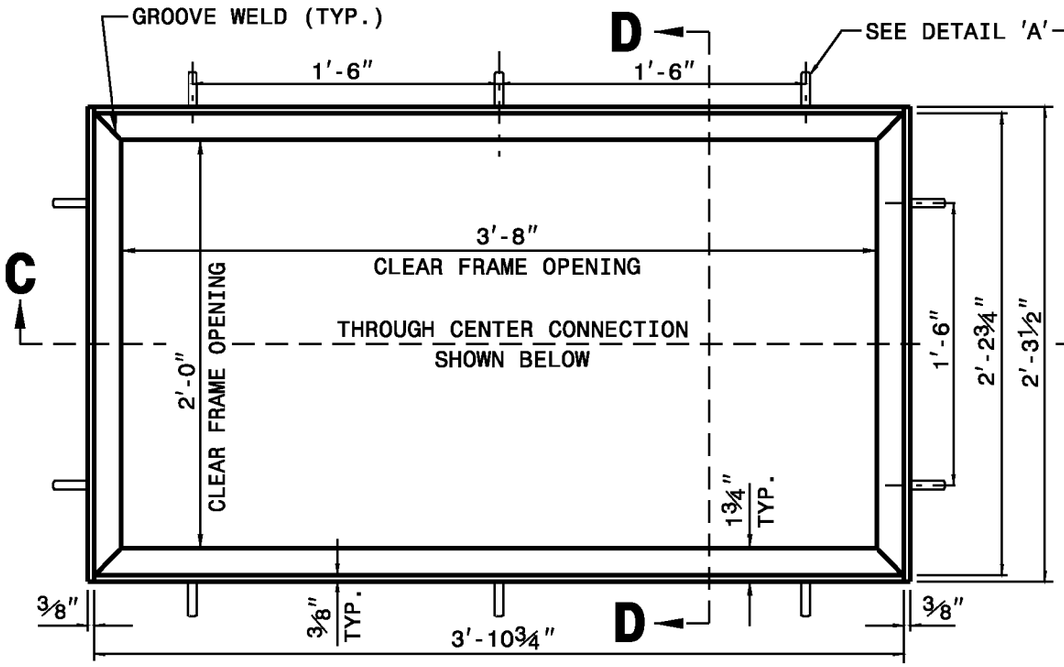

PLAN VIEW

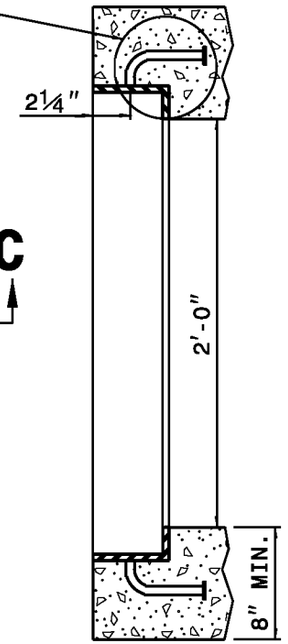

SECTION 'D-D'

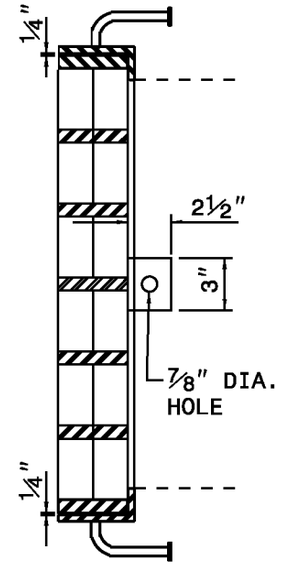

ELEVATION OF GRATE IN FRAME SYSTEM SHOWN THROUGH SECTION 'D-D'

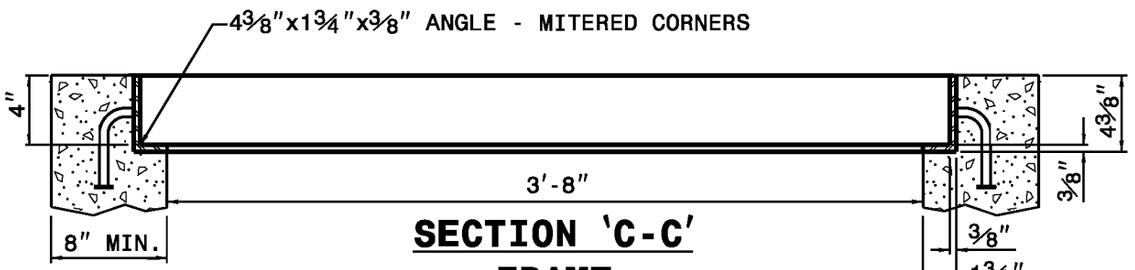

SECTION 'C-C'
FRAME

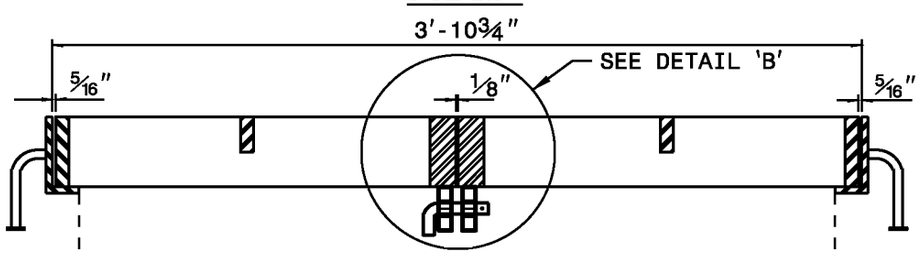

ELEVATION OF GRATES IN FRAME SYSTEM SECTION 'C-C'

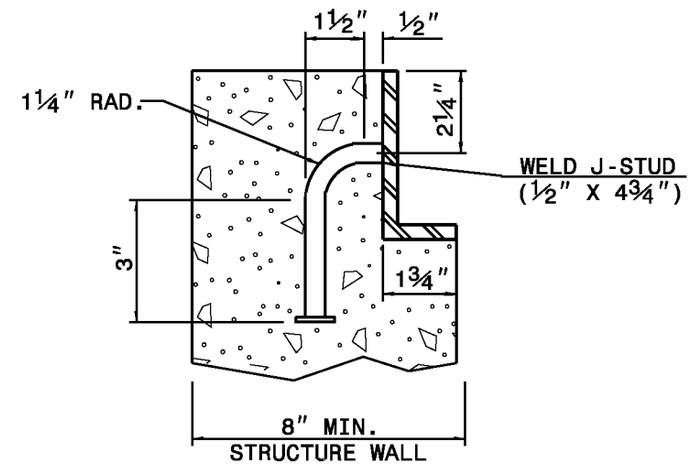

DETAIL 'A' STUD ANCHOR

SHEET 1 OF 2

840.37

STATE OF
NORTH CAROLINA
DEPT. OF TRANSPORTATION
DIVISION OF HIGHWAYS
RALEIGH, N.C.

1-12

ENGLISH STANDARD DRAWING FOR

STEEL GRATE AND FRAME

SHEET 1 OF 2

840.37

STATE OF
NORTH CAROLINA
DEPT. OF TRANSPORTATION
DIVISION OF HIGHWAYS
RALEIGH, N.C.

1-12

ENGLISH STANDARD DRAWING FOR

STEEL GRATE AND FRAME

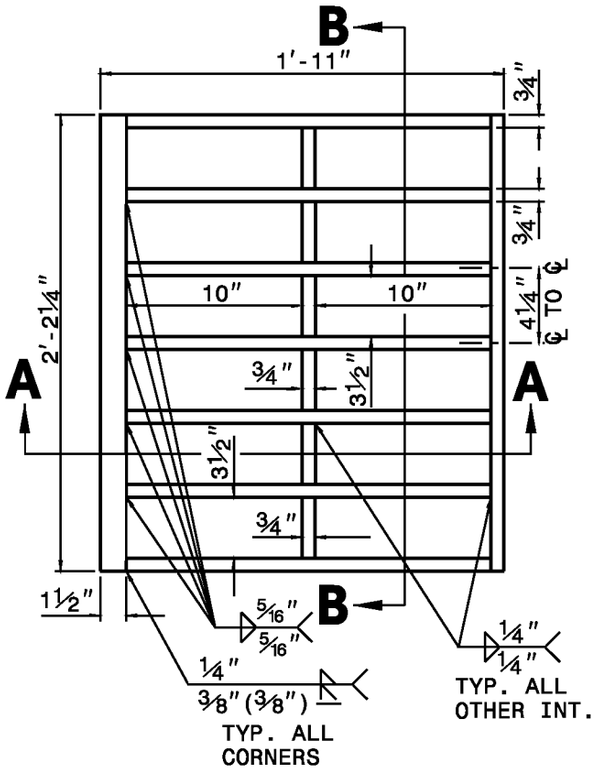

PLAN VIEW

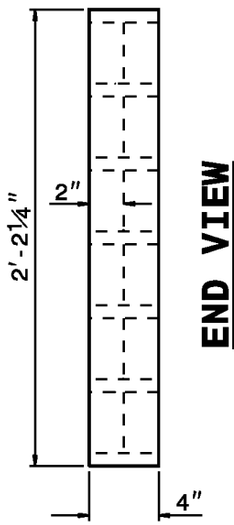

END VIEW

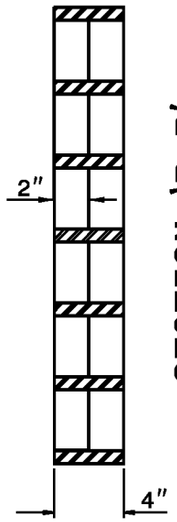

SECTION 'B-B'

NOTES:

1. HOT DIP GALVANIZE FRAME AND GRATE IN ACCORDANCE WITH ASTM DESIGNATION A-123 AND AASHTO M-111.
2. GRATE IS DESIGNED TO WITHSTAND HS25-44 LOADING .
3. TWO (2) GRATES REQUIRED PER FRAME. ONE (1) GRATE DEPICTED FOR CLARITY.
4. PROVIDE STEEL CONFORMING TO THE REQUIREMENTS OF A.S.T.M. DESIGNATION A-36.
5. WELD IN ACCORDANCE WITH THE ANSI/AASHTO/AWS D1.5 WELDING CODE. SEAL WELD ALL CONNECTIONS ALONG TOP AND BOTTOM HORIZONTAL SEAMS OF CONNECTIONS IN ADDITION TO ANY REQUIRED STRUCTURAL WELDS.
6. USE 5/16" DOUBLE FILLET WELDS FOR CONNECTING MAIN BARS TO EDGE BARS AND ¼" FILLETS AT ALL THER LOCATIONS.
7. NOTCHING OF BEARING BARS TO ACCEPT CROSS BAR IS PROHIBITED.

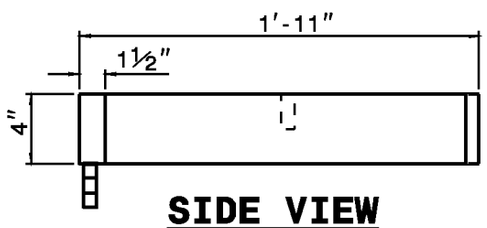

SIDE VIEW

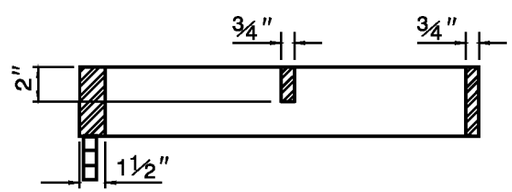

SECTION 'A-A'

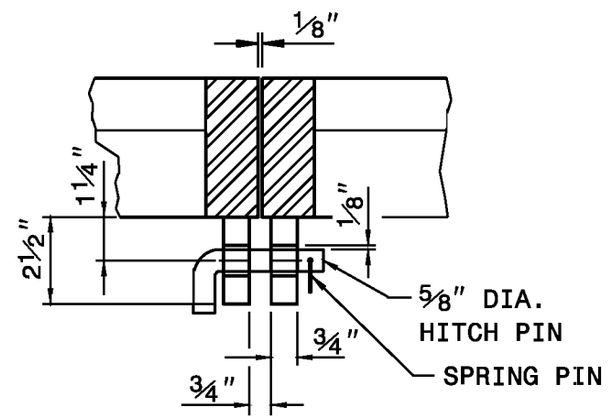

DETAIL 'B' CENTER LOCK

STATE OF
NORTH CAROLINA
DEPT. OF TRANSPORTATION
DIVISION OF HIGHWAYS
RALEIGH, N.C.

1-12

ENGLISH STANDARD DRAWING FOR

STEEL GRATE AND FRAME

SHEET 2 OF 2
840.37

STATE OF NORTH CAROLINA
DEPT. OF TRANSPORTATION
DIVISION OF HIGHWAYS
RALEIGH, N.C.

1-12

ENGLISH STANDARD DRAWING FOR

SPRING BOX

CONCRETE OR BRICK

GENERAL NOTES:

USE CLASS "B" CONCRETE THROUGHOUT.

OPTIONAL CONSTRUCTION OF CONCRETE BOX - MONOLITHIC POUR, 2" KEYWAY, OR #4 BAR DOWELS AT 12" CENTERS AS DIRECTED BY THE ENGINEER.

REINFORCING STEEL (A-BARS) TO BE #3 STRAIGHT BARS, 12 BARS REQUIRED 2'-9" LONG FOR CONCRETE BOX AND 3'-1" LONG FOR BRICK BOX.

DIMENSIONS OF BOX MAY BE CHANGED BY THE ENGINEER.

MORTAR JOINTS ½" ± ⅛" THICK.

CONCAVE TOOL ALL EXPOSED JOINTS.

USE FORMS TO CONSTRUCT THE BOTTOM SLAB.

JUMBO BRICK WILL BE PERMITTED. CONCRETE BRICK OR 4" SOLID CONCRETE BLOCKS MAY BE USED IN LIEU OF CLAY BRICK.

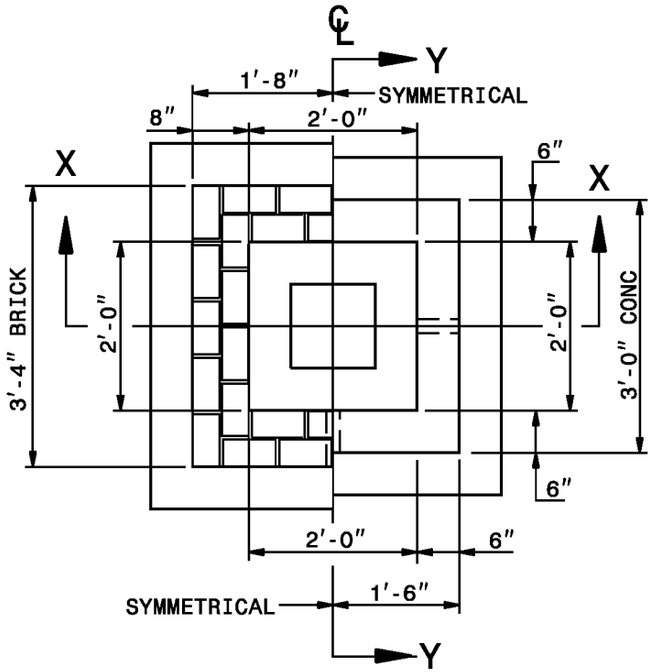

PLAN

COVER REMOVED

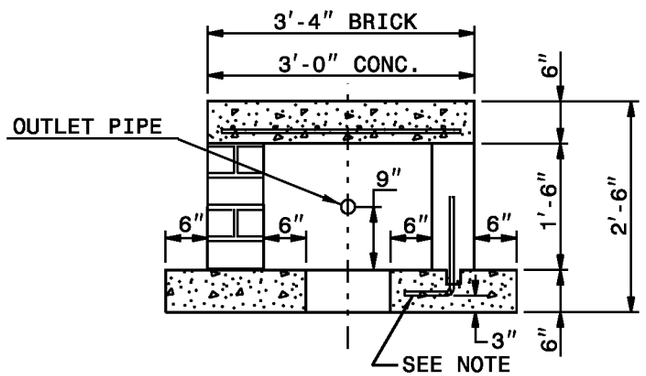

SECTION X-X OR Y-Y

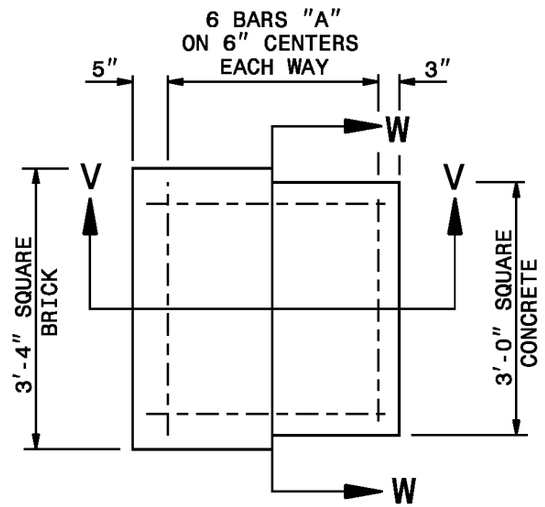

PLAN OF COVER

FOR BRICK BOX | FOR CONCRETE BOX

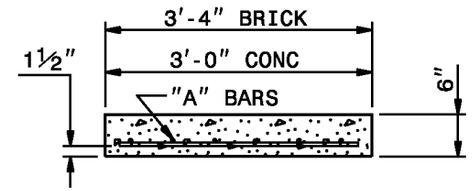

SECTION V-V OR W-W

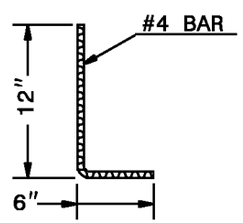

DOWEL

TABLE OF QTY.'S FOR CONC. SPRING BOX			
FILL HEIGHT	TOP SLAB THICKNESS	CONC. CU. YD.	REINF. LBS.
25' OR LESS	6"	0.722	12
26' THRU 50'	6½"*	0.737	22
51' THRU 75'	7½"	0.742	34
76' THRU 100'	8½"	0.792	34

TABLE OF QUANTITIES FOR BRICK SPRING BOX					
FILL HEIGHT	TOP SLAB THICKNESS	CONC. CU. YD.	BRICK CU. YD.	TOTAL CU. YD.	REINF. LBS.
25' OR LESS	6"	0.535	0.395	0.930	14
26' THRU 50'	6½"*	0.552	0.395	0.947	25
51' THRU 75'	7½"	0.586	0.395	0.981	39
76' THRU 100'	8½"	0.620	0.395	1.015	39

* USE THIS TOP SLAB FOR LIVE LOAD UP TO 2' OF FILL.

STATE OF NORTH CAROLINA
DEPT. OF TRANSPORTATION
DIVISION OF HIGHWAYS
RALEIGH, N.C.

1-12

ENGLISH STANDARD DRAWING FOR

SPRING BOX

CONCRETE OR BRICK

SHEET 1 OF 1
840.41

STATE OF
NORTH CAROLINA
DEPT. OF TRANSPORTATION
DIVISION OF HIGHWAYS
RALEIGH, N.C.

1-12

ENGLISH STANDARD DRAWING FOR

PRECAST DRAINAGE STRUCTURE

(SOLID AND WAFFLE WALL)

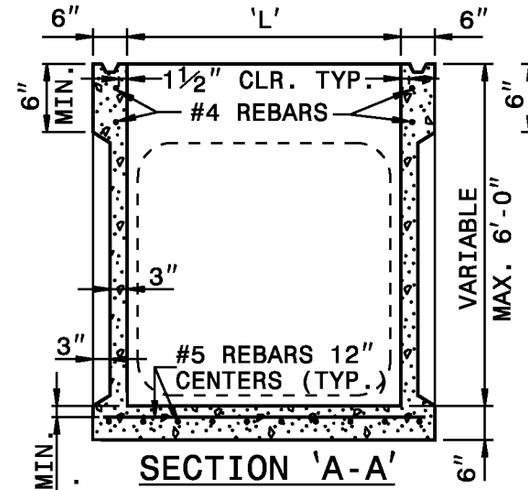

SECTION 'A-A'

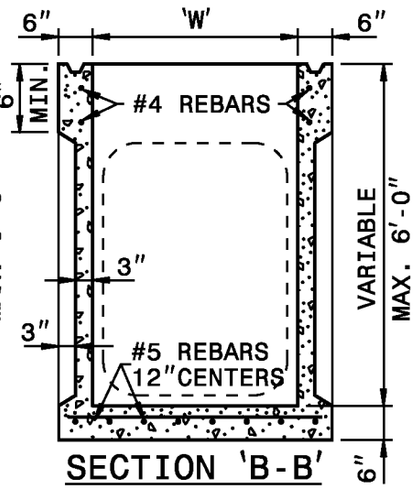

SECTION 'B-B'

THE PATTERN OF THE KNOCK-OUT PANELS ARE SHOWN FOR ILLUSTRATIVE PURPOSES ONLY.

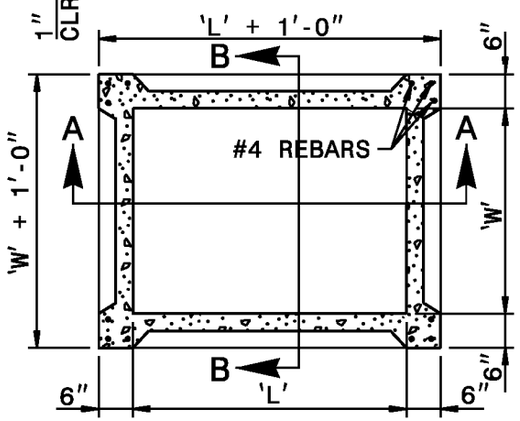

WAFFLE WALL PLAN VIEW

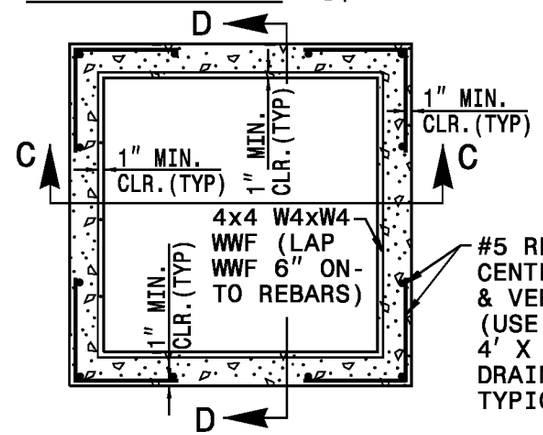

SOLID WALL PLAN VIEW

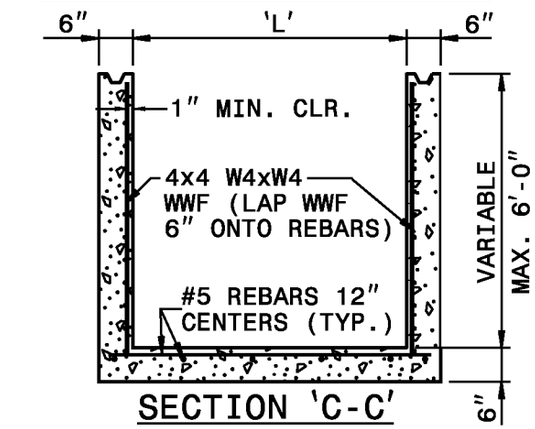

SECTION 'C-C'

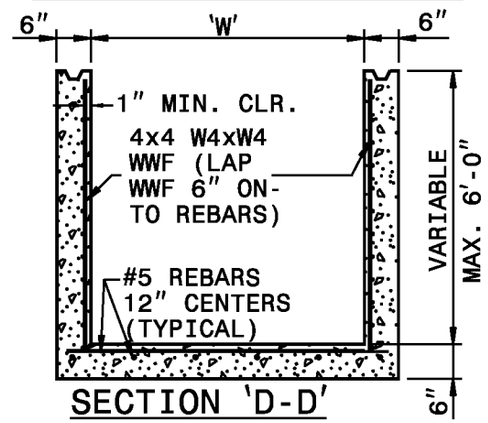

SECTION 'D-D'

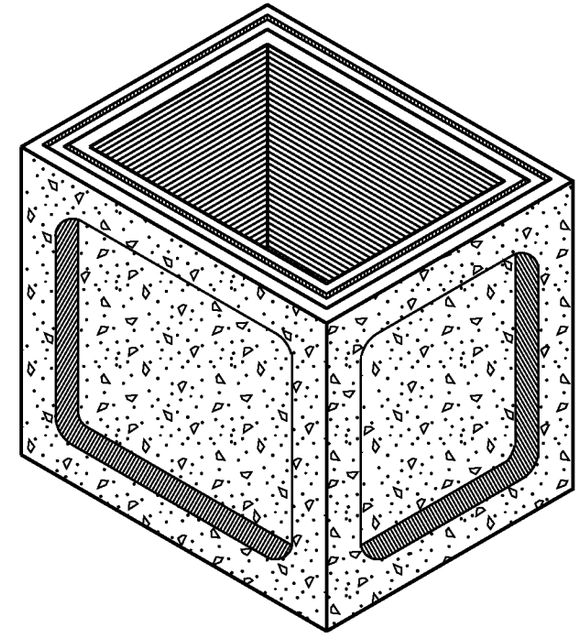

WAFFLE WALL ISOMETRIC VIEW

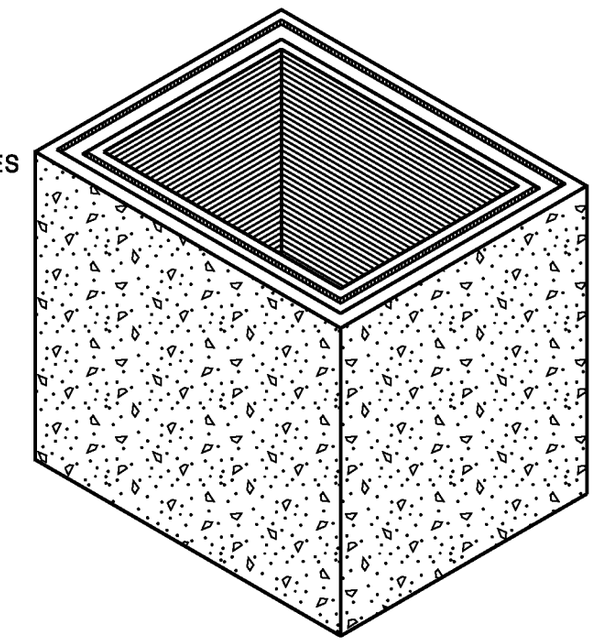

SOLID WALL ISOMETRIC VIEW

STATE OF
NORTH CAROLINA
DEPT. OF TRANSPORTATION
DIVISION OF HIGHWAYS
RALEIGH, N.C.

1-12

ENGLISH STANDARD DRAWING FOR

PRECAST DRAINAGE STRUCTURE

(SOLID AND WAFFLE WALL)

SHEET 1 OF 2
840.45

STATE OF
NORTH CAROLINA
DEPT. OF TRANSPORTATION
DIVISION OF HIGHWAYS
RALEIGH, N.C.

1-12

ENGLISH STANDARD DRAWING FOR

PRECAST DRAINAGE STRUCTURE

(GENERAL NOTES AND DETAILS)

SHEET 2 OF 2

840.45

GENERAL NOTES:

* THIS PRECAST BOX MAY BE USED FOR THE FOLLOWING STANDARDS: 840.01, 840.02, 840.04, 840.05, 840.11, 840.12, 840.14, 840.15, 840.17, 840.18, 840.19, 840.26, 840.27, 840.28, 840.31, 840.32 AND 840.41.
* INSTALL PRECAST DRAINAGE STRUCTURES AND PAY FOR IN ACCORDANCE WITH SPECIFICATION SECTION 840.
* DO NOT PLACE PRECAST DRAINAGE STRUCTURES UNDER TRAFFIC OR WHERE TRAFFIC WILL BE DETOURED.
* USE 4000 PSI CONCRETE.
* PROVIDE ALL REINFORCING STEEL WHICH MEETS ASTM A615 FOR GRADE 60 AND WELDED WIRE FABRIC CONFORMING TO ASTM A185.
* LIMIT MAXIMUM DEPTH TO TOP OF BOTTOM SLAB FOR WAFFLE WALL STRUCTURE TO 10′-0″; LIMIT SOLID WALL STRUCTURE TO 15′-0″.
* PLACE LIFT HOLES OR PINS IN ACCORDANCE WITH OSHA STANDARD 1926.704.
* CUT OR FORM OPENINGS FOR PIPE TO PROVIDE REQUIRED SIZE AND LOCATION. ORIENT WAFFLE WALL STRUCTURES SO THAT PIPES ENTER THROUGH THE KNOCKOUT/WAFFLE PANELS ONLY. PIPES MAY ENTER THROUGH THE CORNERS OF SOLID WALL BOXES IF A MINIMUM OF 6″ OF WALL IS PROVIDED ABOVE THE HOLE.
* ALL ELEMENTS PRECAST TO MEET ASTM C913.
* FRAME AND GRATE HEIGHT MAY BE ADJUSTED WITH CONCRETE OR BRICK IN ACCORDANCE WITH STANDARD 840.25.
* PROVIDE PRECAST STRUCTURES OVER 4′-0″ IN DEPTH WITH STEPS AS DIRECTED BY THE ENGINEER.
* WELDED WIRE FABRIC MAY BE SUBSTITUTED FOR REBAR AS LONG AS THE SAME AREA OF STEEL IS PROVIDED.
* SEAL JOINTS WITH A FLEXIBLE BUTYL RUBBER BASE CONFORMING TO FEDERAL SPECIFICATION SS-S-21A, AASHTO M-198, TYPE B - BUTYL RUBBER.
* LIMIT MAXIMUM STRUCTURE SIZE TO INSIDE CLEAR DIMENSIONS OF 5′-0″ X 5′-0″.
* THE OUTSIDE PIPE DIAMETER PLUS 2″ OR THE OPENING REQUIRED FOR FRAME AND GRATE IS THE MINIMUM STRUCTURE SIZE WHICHEVER IS GREATER.
* USE MANHOLE FRAME AND COVER AS INDICATED ON THE PLANS. REINFORCE OPENING AS SHOWN ON THIS SHEET.

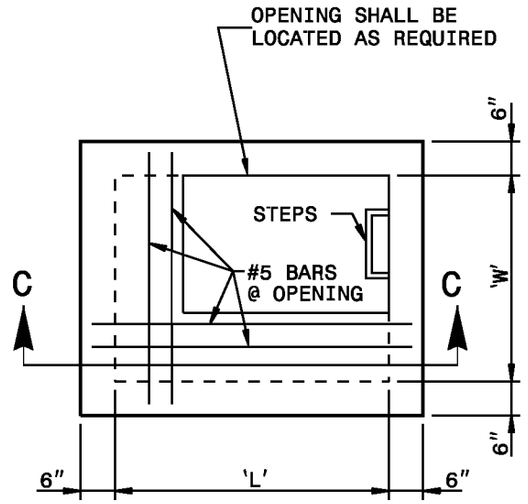

PLAN TOP SLAB

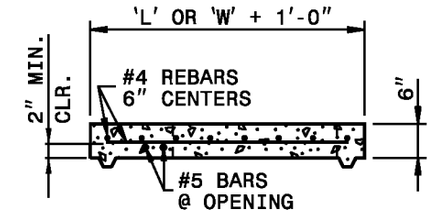

SECTION 'C-C'

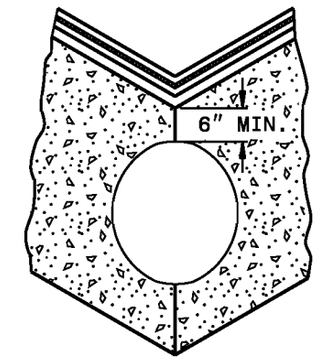

CORNER CUT DETAIL
(SOLID WALL BOX)

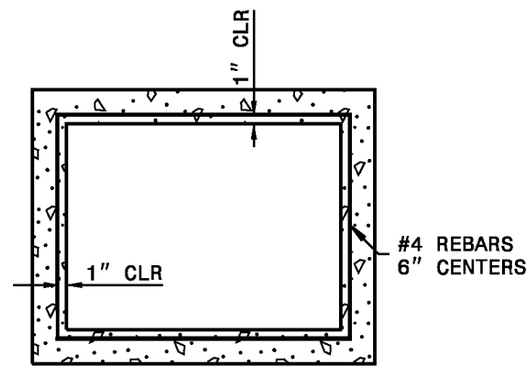

PRECAST RISER PLAN

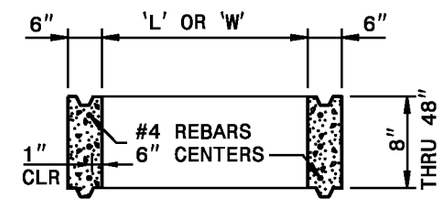

PRECAST RISER DETAIL

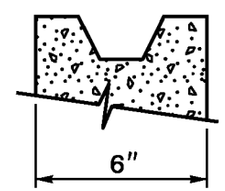

SECTION VIEW

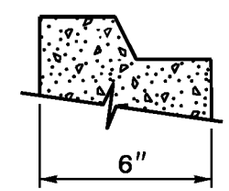

SECTION VIEW

OPTIONAL JOINT DETAILS

STATE OF
NORTH CAROLINA
DEPT. OF TRANSPORTATION
DIVISION OF HIGHWAYS
RALEIGH, N.C.

1-12

ENGLISH STANDARD DRAWING FOR

PRECAST DRAINAGE STRUCTURE

(GENERAL NOTES AND DETAILS)

SHEET 2 OF 2

840.45

STATE OF NORTH CAROLINA
DEPT. OF TRANSPORTATION
DIVISION OF HIGHWAYS
RALEIGH, N.C.

1-12

ENGLISH STANDARD DRAWING FOR

TRAFFIC BEARING PRECAST DRAINAGE STRUCTURE

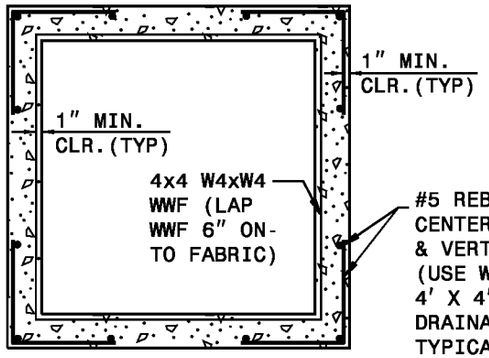

#5 REBARS @ 12" CENTERS (HORIZ. & VERT.) (USE WITH 4' X 4' & LARGER DRAINAGE STRUCTURES TYPICAL) - 'L' BARS WITH 1'-6" LEGS

PLAN VIEW OF BASE UNIT

SECTION VIEWS

OPTIONAL JOINT DETAILS

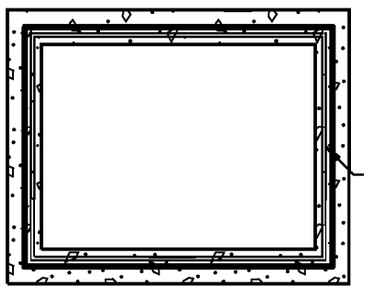

#4 REBARS @ 6" CENTERS EACH WAY LOCATED IN CENTER THIRD OF WALL

PRECAST RISER PLAN

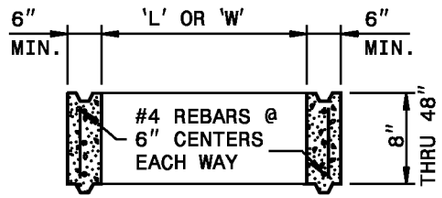

TYPICAL PRECAST RISER SECTION

GENERAL NOTES:

* THIS PRECAST BOX MAY BE USED FOR THE FOLLOWING STANDARDS: 840.04, 840.05, 840.14, 840.15, 840.31, 840.32, 840.34, 840.35, 840.36 AND 840.41.
* INSTALL AND PAY FOR PRECAST DRAINAGE STRUCTURES IN ACCORDANCE WITH NCDOT STANDARD SPECIFICATION SECTION 840.
* USE 4000 PSI MINIMUM COMPRESSIVE STRENGTH CONCRETE.
* USE ASTM A615 GRADE 60 REINFORCING STEEL. USE ASTM A185 WELDED WIRE FABRIC (WWF).
* LIMIT MAXIMUM DEPTH TO TOP OF BOTTOM SLAB TO 15'-0".
* PLACE LIFT HOLES OR PINS IN ACCORDANCE WITH OSHA STANDARD 1926.704.
* ORIENT STRUCTURES SO THAT CORNERS WILL NOT BE CUT OR MODIFIED UNLESS ALLOWED BY DETAIL IN PLANS.
* PRECAST ALL ELEMENTS TO MEET ASTM C913.
* FRAME AND GRATE HEIGHT MAY BE ADJUSTED WITH CONCRETE OR BRICK IN ACCORDANCE WITH STANDARD 840.25.
* PROVIDE PRECAST STRUCTURES OVER 4'-0" IN DEPTH WITH STEPS 12" ON CENTERS IN ACCORDANCE WITH STD. NO. 840.66.
* WELDED WIRE FABRIC MAY BE SUBSTITUTED FOR REBAR IF THE SAME MIN. AREA OF STEEL IS PROVIDED.
* SEAL JOINTS WITH AN APPROVED SEALANT (SEE SECTION 840 OF NCDOT STANDARD SPECIFICATIONS.
* LIMIT MAXIMUM STRUCTURE SIZE INSIDE CLEAR DIMENSIONS TO 6'-0" X 6'-0".
* THE OUTSIDE PIPE DIAMETER PLUS 2" IS THE MINIMUM STRUCTURE SIZE OR THE OPENING REQUIRED FOR GRATE AND FRAME WHICHEVER IS GREATER.
* ROUND MANHOLE MAY BE USED IN LIEU OF SQUARE PROVIDED 2 EXTRA #5'S ARE PLACED ON EVERY SIDE NOT ADJACENT TO A WALL. SEE STD. DWG. 840.34 FOR MANHOLE INSTALLATION.

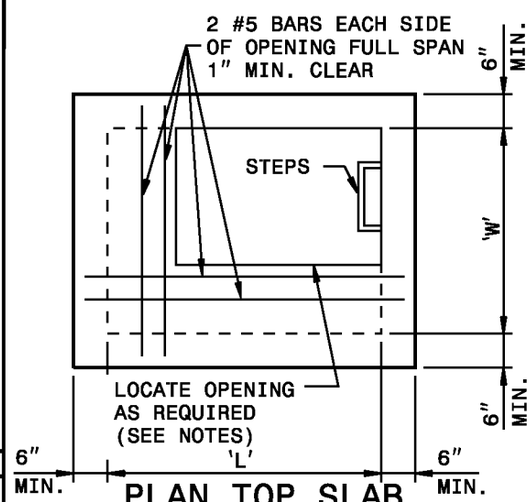

PLAN TOP SLAB

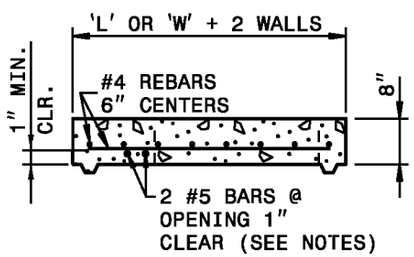

TYPICAL SECTION TOP SLAB

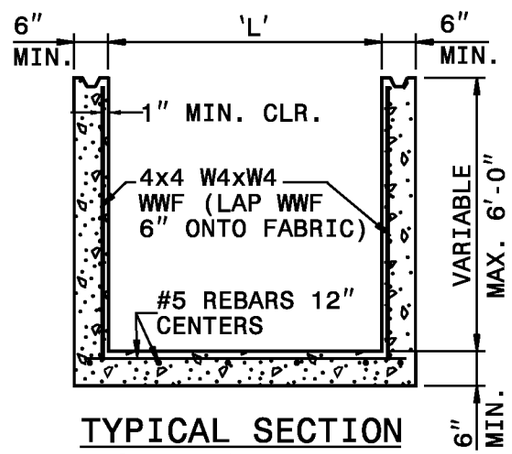

TYPICAL SECTION OF BASE UNIT

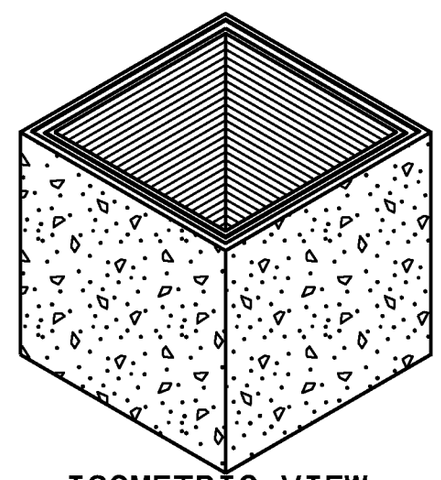

ISOMETRIC VIEW

SHEET 1 OF 1

840.46

STATE OF NORTH CAROLINA
DEPT. OF TRANSPORTATION
DIVISION OF HIGHWAYS
RALEIGH, N.C.

1-12

ENGLISH STANDARD DRAWING FOR

TRAFFIC BEARING PRECAST DRAINAGE STRUCTURE

SHEET 1 OF 1

840.46

STATE OF
NORTH CAROLINA
DEPT. OF TRANSPORTATION
DIVISION OF HIGHWAYS
RALEIGH, N.C.

1-12

ENGLISH STANDARD DRAWING FOR

BRICK MANHOLE

12" THRU 36" PIPE

GENERAL NOTES:

MORTAR JOINTS ½" ± ⅛" THICK.

CONCAVE TOOL ALL EXPOSED JOINTS.

USE CLASS "B" CONCRETE THROUGHOUT.

USE FORMS TO CONSTRUCT THE BASE SLAB.

JUMBO BRICK WILL BE PERMITTED. CONCRETE BRICK OR 4" SOLID CONCRETE BLOCKS MAY BE USED IN LIEU OF CLAY BRICK.

IF REINFORCED CONCRETE PIPE IS SET IN BASE SLAB OF BOX, ADD TO BASE AS SHOWN IN STD. NO. 840.00.

WHERE THE MANHOLE IS EXPOSED TO ROAD TRAFFIC, CONSTRUCT THE TOP OF THE MANHOLE FLUSH WITH THE GROUND. AT OTHER LOCATIONS CONSTRUCT A MINIMUM OF 9" ABOVE THE GROUND.

PROVIDE MANHOLES OVER 3'-6" IN DEPTH WTH STEPS 12" ON CENTERS IN ACCORDANCE WITH STD. NO. 840.66.

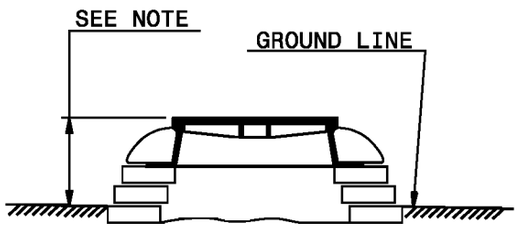

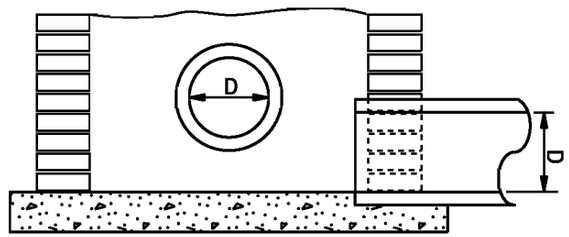

PART SECTION Y-Y

MINIMUM DIMENSIONS AND QUANTITIES FOR MANHOLE					
PIPE DIM.	CU. YDS. CONCRETE	TOTAL BRICK MASONRY CU. YDS.	CU. YDS. BRICK MASONRY PER FT. HT.	DEDUCTIONS FOR ONE PIPE (CU.YD.)	
D	BASE	ABOVE S-L	BELOW S-L	C.M.	R.C.
12"	0.560	0.530	0.323	0.020	0.032
15"	0.560	0.530	0.323	0.031	0.047
18"	0.560	0.530	0.323	0.044	0.065
24"	0.560	0.530	0.323	0.078	0.113
30"	0.560	0.530	0.323	0.122	0.170
36"	0.560	0.530	0.323	0.176	0.238

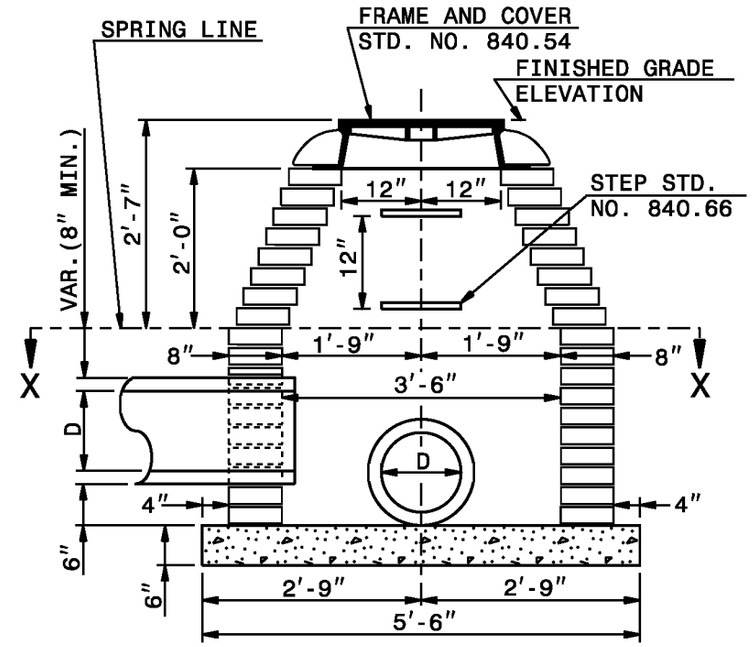

SECTION ON ℄

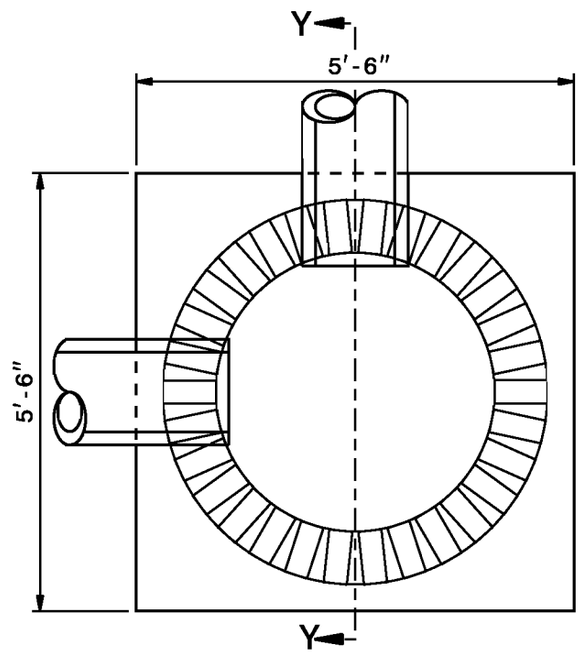

SECTION X-X

STATE OF
NORTH CAROLINA
DEPT. OF TRANSPORTATION
DIVISION OF HIGHWAYS
RALEIGH, N.C.

1-12

ENGLISH STANDARD DRAWING FOR

BRICK MANHOLE

12" THRU 36" PIPE

SHEET 1 OF 1

840.51

SHEET 1 OF 1

840.51

STATE OF NORTH CAROLINA
DEPT. OF TRANSPORTATION
DIVISION OF HIGHWAYS
RALEIGH, N.C.

1-12

ENGLISH STANDARD DRAWING FOR

PRECAST MANHOLE 4',5' AND 6' DIAMETER

12" THRU 48" PIPE

SHEET 1 OF 1

840.52

GENERAL NOTES

USE 4000 PSI MINIMUM COMPRESSIVE STRENGTH CONCRETE.

FABRICATE, ASSEMBLE AND DESIGN PRECAST MANHOLE COMPONENTS ACCORDANCE WITH AASHTO M199.

ASSEMBLE RISER AND GRADE RINGS WITH THE STEPS SPACED 12" FROM THE TOP TO THE BOTTOM OF THE MANHOLE.

WHERE THE MANHOLE IS EXPOSED TO ROAD TRAFFIC, CONSTRUCT THE TOP OF THE MANHOLE FLUSH WITH THE GROUND AND A MINIMUM OF 9" ABOVE THE GROUND AT OTHER LOCATIONS.

LIMIT DEPTH OF FILL TO 30'-0" FROM FINISH GRADE TO TOP OF BOTTOM SLAB.

THE MIN. SLAB THICKNESS 'T' IS THE DIMENSION OF THE THINNEST PORTION OF THE TOP/BOTTOM SLAB.

* TOP MAT OF REINFORCEMENT MAY BE NEGLECTED IF TOP SLAB HAS A DISTINGUISHABLE TOP AND BOTTOM.

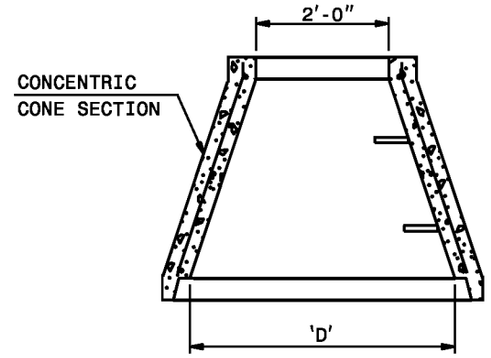

ALTERNATE CONE SECTION

D	W	T	As
INTERNAL DIAMETER (FT.)	MIN. WALL THICKNESS (IN.)	MIN. TOP/BOTTOM SLAB THICKNESS (IN.)	MIN. CIRCUMFERENTIAL AREA OF STEEL PER VERTICAL FT. (SQ. IN.)
4	4	6	0.12
5	5	8	0.15
6	6	8	0.18

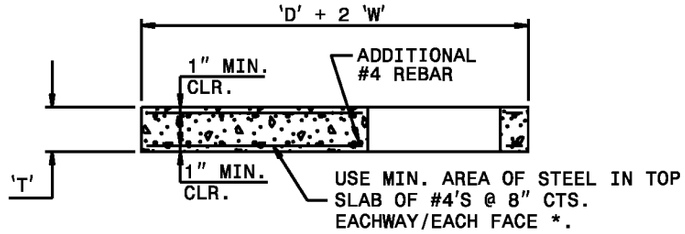

FLAT TOP SLAB

FRAME AND GRATES	STD. NO.
TRAFFIC BEARING	840.37
NONTRAFFIC BEARING:	840.22
	840.24
	840.20
	840.29
	840.33

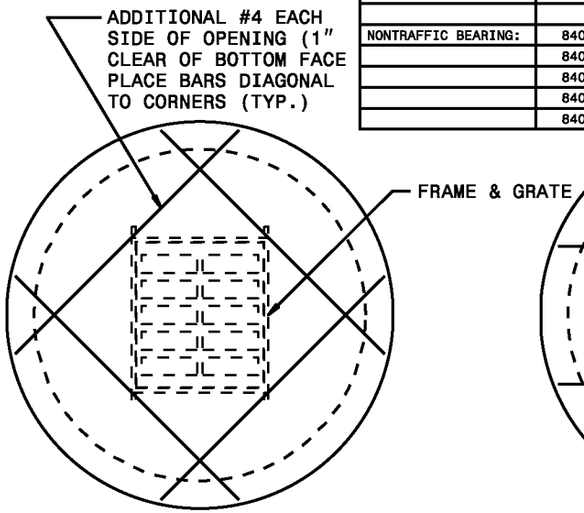

GRATED INLET OPTION

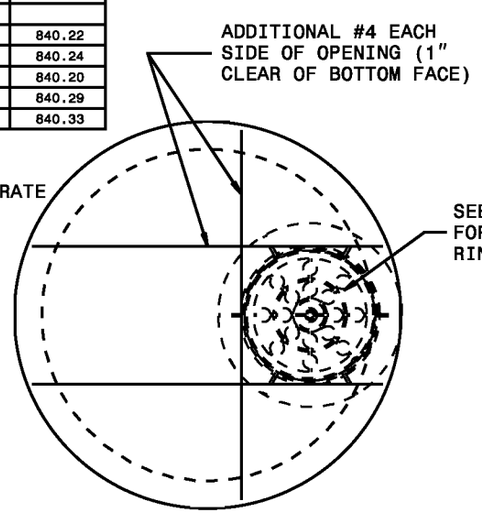

MANHOLE OPTION

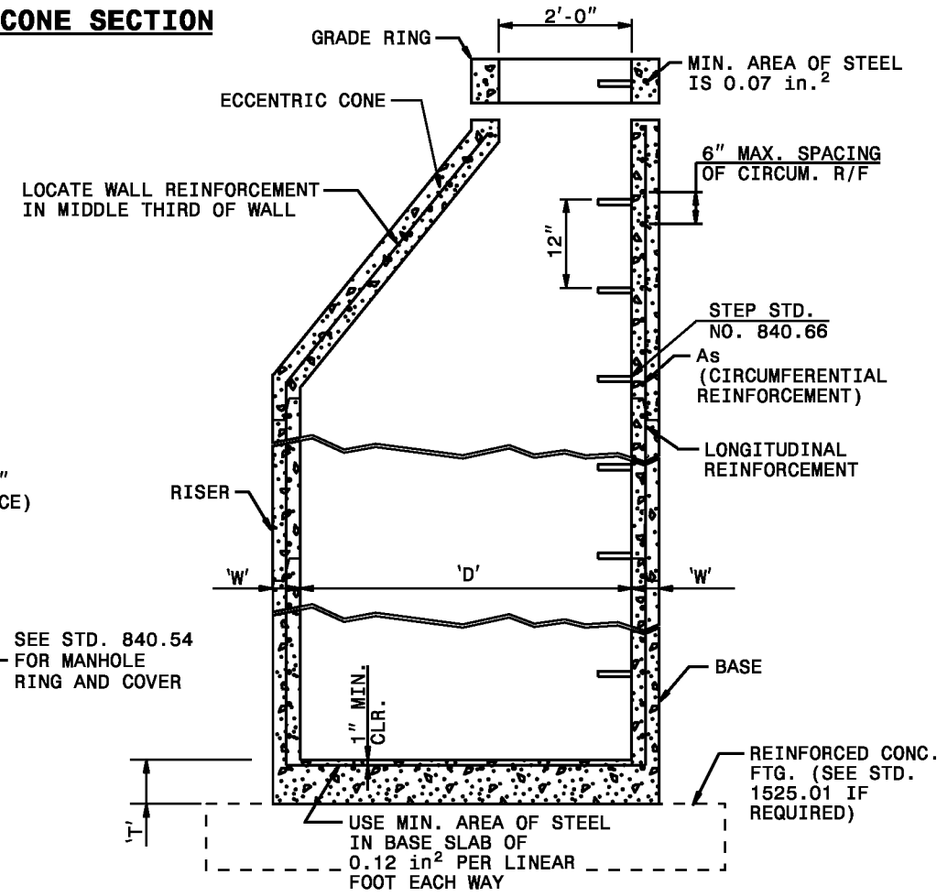

TYPICAL MANHOLE SECTION

STATE OF NORTH CAROLINA
DEPT. OF TRANSPORTATION
DIVISION OF HIGHWAYS
RALEIGH, N.C.

1-12

ENGLISH STANDARD DRAWING FOR

PRECAST MANHOLE 4',5' AND 6' DIAMETER

12" THRU 48" PIPE

SHEET 1 OF 1

840.52

STATE OF
NORTH CAROLINA
DEPT. OF TRANSPORTATION
DIVISION OF HIGHWAYS
RALEIGH, N.C.

1-12

ENGLISH STANDARD DRAWING FOR

PRECAST MANHOLE WITH MASONRY BASE

12″ THRU 42″ PIPE

SHEET 1 OF 1

840.53

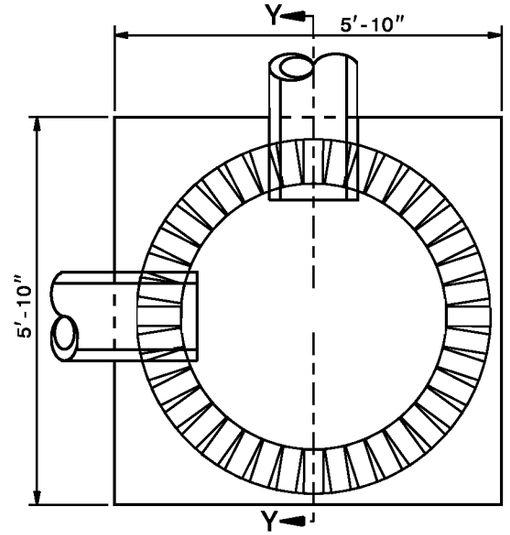

SECTION X-X

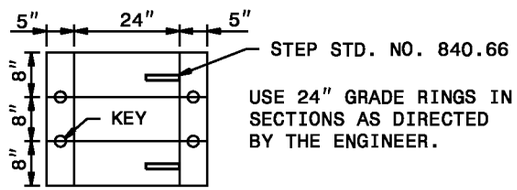

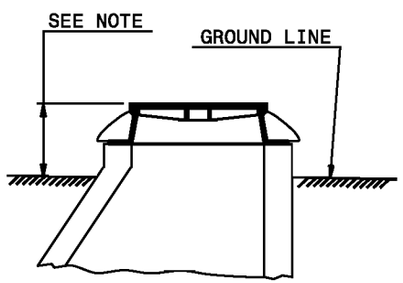

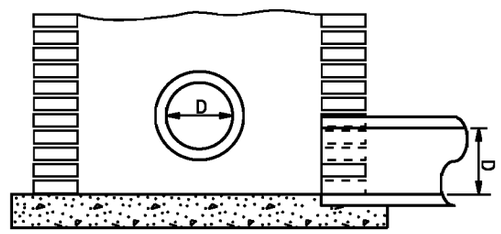

PART SECTION Y-Y

DIMENSIONS	
PIPE DIM.	BRICK HEIGHT
D	H1 (MIN)
12″	1′-5″
15″	1′-8″
18″	1′-11″
24″	2′-6″
30″	3′-0″
36″	3′-7″
42″	4′-2″

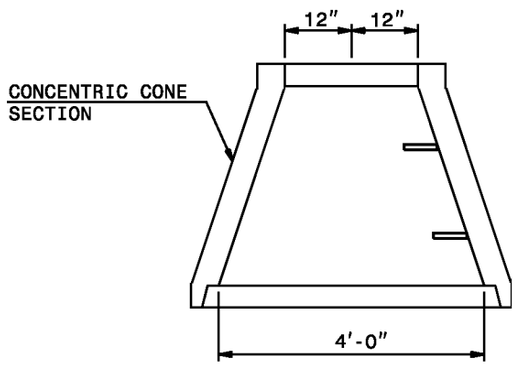

ALTERNATE CONE SECTION

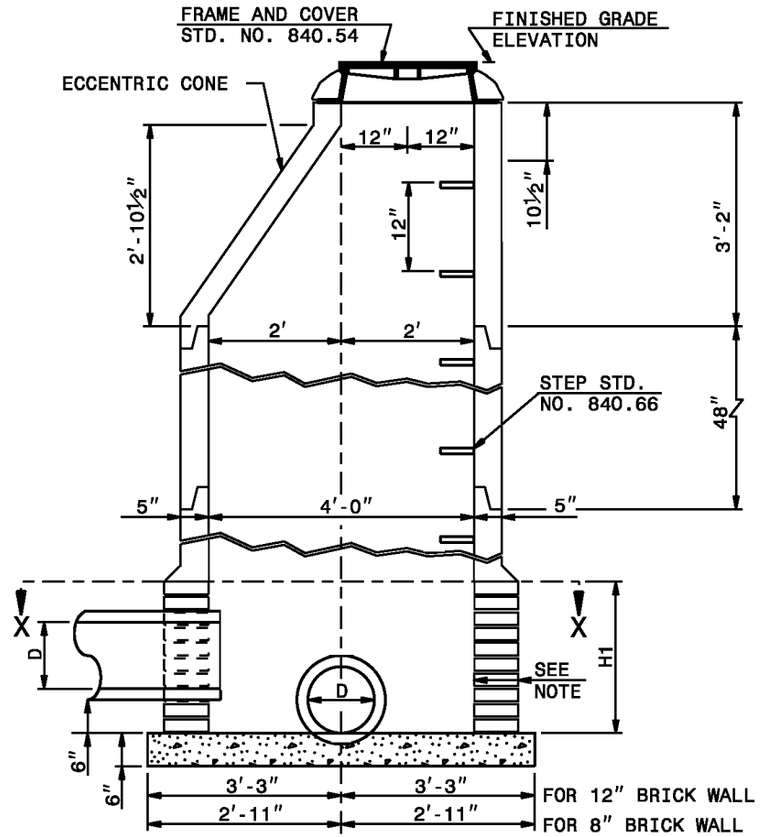

SECTION ON ℄

GENERAL NOTES:

MORTAR JOINTS ½″ ± ⅛″ THICK.

USE CLASS "B" CONCRETE THROUGHOUT.

USE FORMS TO CONSTRUCT THE BASE SLAB.

JUMBO BRICK WILL BE PERMITTED. CONCRETE BRICK OR 4″ SOLID CONCRETE BLOCK WILL BE USED IN LIEU OF CLAY BRICK.

USE PRECAST MANHOLE COMPONENTS MEETING REQUIREMENTS OF STD.NO.840.52 AND AASHTO M199.

FOR MANHOLE OVER 12′ VERTICAL WALL DEPTH, CONSTRUCT BRICK MASONRY WALL 12″ THICK. FOR MANHOLES WITH A VERTICAL WALL DEPTH LESS THAN 12′, CONSTRUCT BRICK MASONRY WALL 8″ THICK.

ASSEMBLE RISERS AND GRADE RINGS WITH THE STEPS SPACED 12″ FROM THE TOP TO THE BOTTOM OF THE MANHOLE.

WHERE THE MANHOLE IS EXPOSED TO ROAD TRAFFIC, CONSTRUCT THE TOP OF THE MANHOLE FLUSH WITH THE GROUND AND A MINIMUM OF 9″ ABOVE THE GROUND AT OTHER LOCATIONS

IF REINFORCED CONCRETE PIPE IS SET IN BASE SLAB OF BOX, ADD TO BASE AS SHOWN IN STD. NO. 840.00.

STATE OF
NORTH CAROLINA
DEPT. OF TRANSPORTATION
DIVISION OF HIGHWAYS
RALEIGH, N.C.

1-12

ENGLISH STANDARD DRAWING FOR

PRECAST MANHOLE WITH MASONRY BASE

12″ THRU 42″ PIPE

SHEET 1 OF 1

840.53

STATE OF
NORTH CAROLINA
DEPT. OF TRANSPORTATION
DIVISION OF HIGHWAYS
RALEIGH, N.C.

1-12

ENGLISH STANDARD DRAWING FOR

MANHOLE FRAME AND COVER

SOLID COVER SHOWN PERFORATED. PERFORATED AVAILABLE IF SPECIFIED.
STATE USE OF SYSTEM ON COVER
(I.E.: SEWER, STORM DRAIN, ELECTRICAL)

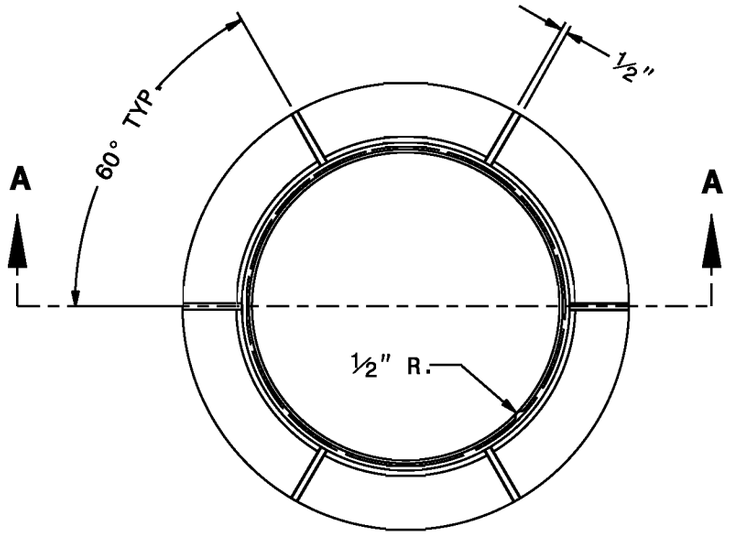

PLAN OF FRAME

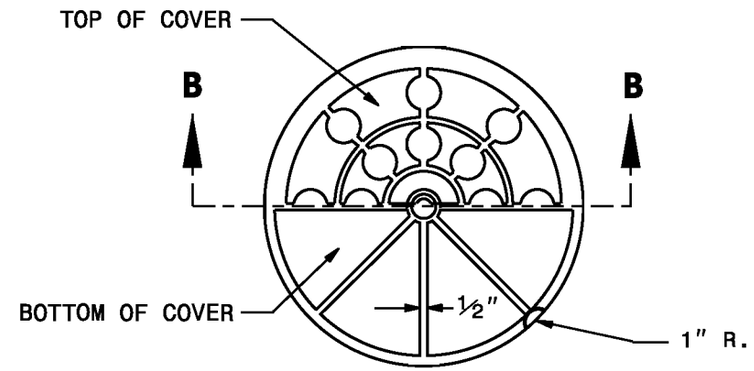

PLAN OF COVER

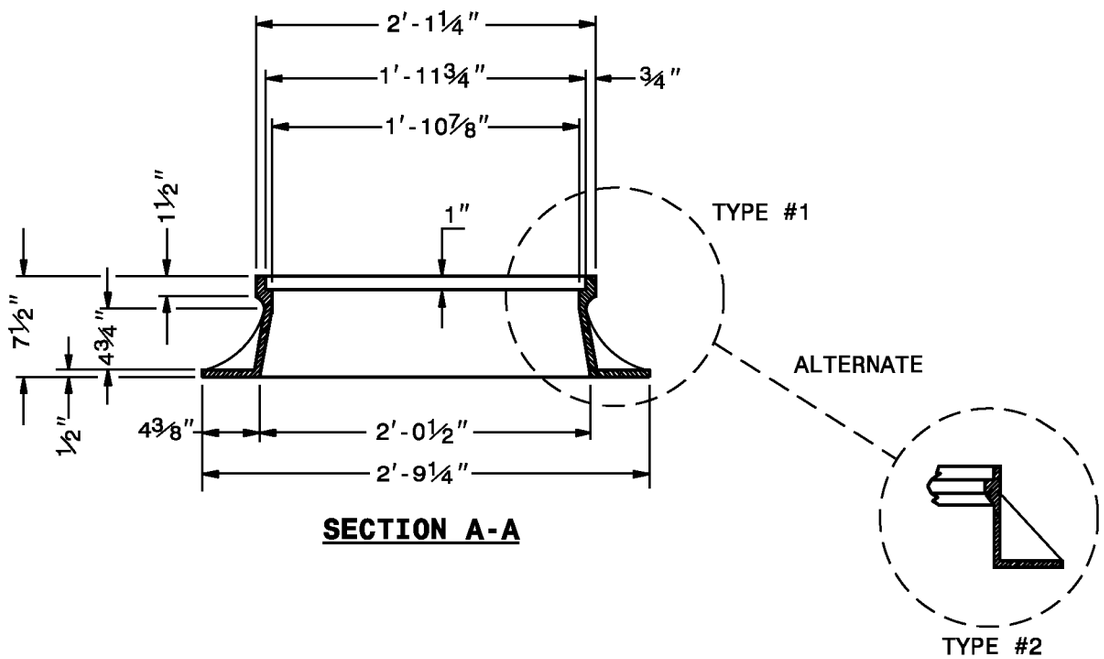

SECTION A-A

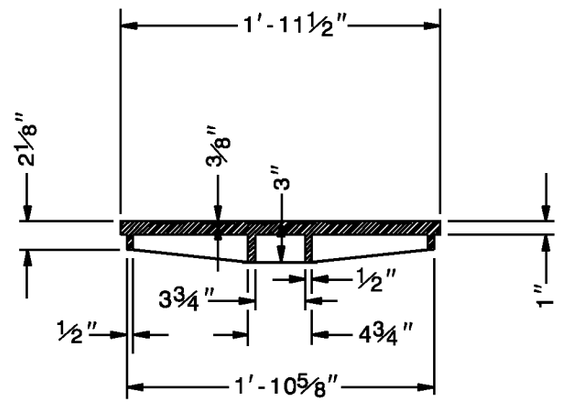

SECTION B-B

MINIMUM WEIGHTS - LBS.
FRAME - 180
COVER - 120
TOTAL - 300

SHEET 1 OF 1

840.54

STATE OF
NORTH CAROLINA
DEPT. OF TRANSPORTATION
DIVISION OF HIGHWAYS
RALEIGH, N.C.

1-12

ENGLISH STANDARD DRAWING FOR

MANHOLE FRAME AND COVER

SHEET 1 OF 1

840.54

STATE OF
NORTH CAROLINA
DEPT. OF TRANSPORTATION
DIVISION OF HIGHWAYS
RALEIGH, N.C.

1-12

ENGLISH STANDARD DRAWING FOR

DRAINAGE STRUCTURE STEPS

NOTES:
INSTALL ALL STEPS PROTRUDING 4" FROM INSIDE FACE OF STRUCTURE WALL.
STEPS DIFFERING IN DIMENSIONS, CONFIGURATION, OR MATERIALS FROM THOSE SHOWN MAY ALSO BE USED PROVIDED THE CONTRACTOR HAS FURNISHED THE ENGINEER WITH DETAILS OF THE PROPOSED STEPS AND HAS RECEIVED WRITTEN APPROVAL FROM THE ENGINEER FOR THE USE OF SUCH STEPS.

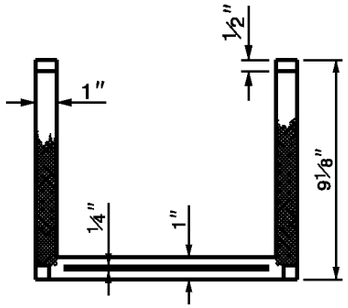

PLAN

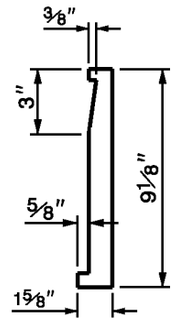

SIDE ELEVATION

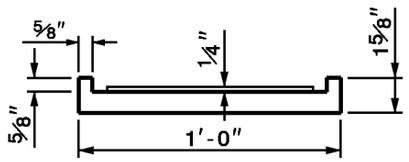

ELEVATION

CAST IRON

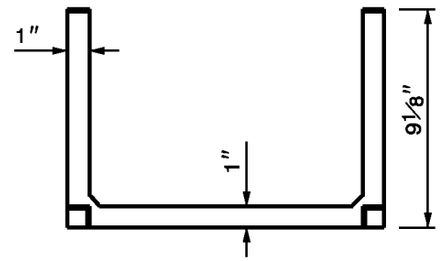

PLAN

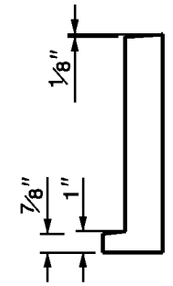

SIDE ELEVATION

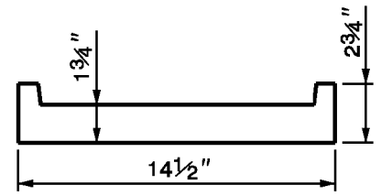

ELEVATION

CAST IRON

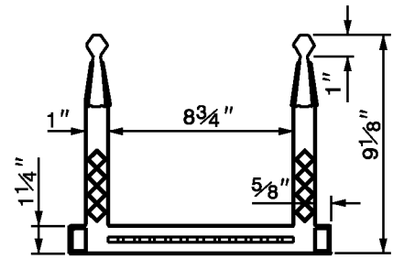

PLAN

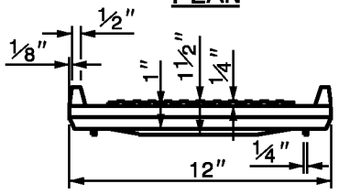

ELEVATION

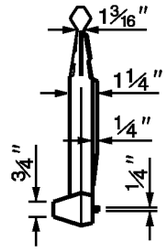

SIDE ELEVATION
COMPOSITE

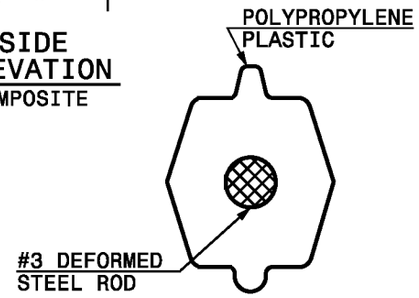

SECTION A-A

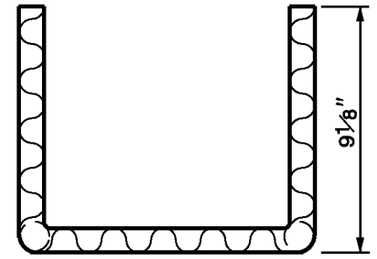

PLAN

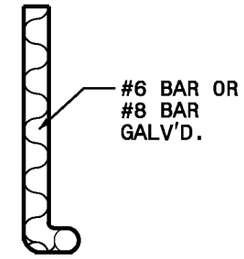

SIDE ELEVATION

REINFORCING STEEL

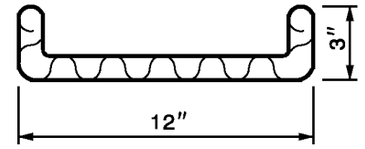

ELEVATION

NOTE:
DO NOT USE IN
SANITARY SEWER MANHOLES.

SHEET 1 OF 1

840.66

STATE OF
NORTH CAROLINA
DEPT. OF TRANSPORTATION
DIVISION OF HIGHWAYS
RALEIGH, N.C.

1-12

ENGLISH STANDARD DRAWING FOR

DRAINAGE STRUCTURE STEPS

SHEET 1 OF 1

840.66

STATE OF
NORTH CAROLINA
DEPT. OF TRANSPORTATION
DIVISION OF HIGHWAYS
RALEIGH, N.C.

1-12

ENGLISH STANDARD DRAWING FOR

CONCRETE AND BRICK PIPE PLUG

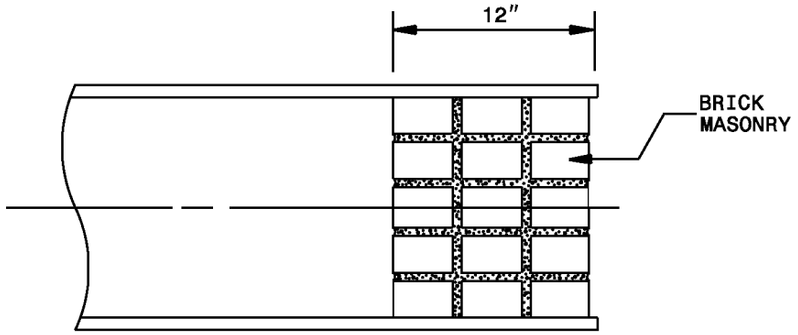

SECTION OF MASONRY
PIPE PLUG

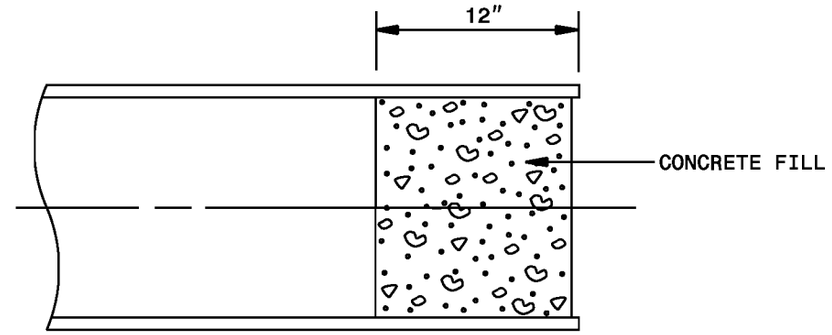

SECTION OF CONCRETE
PIPE PLUG

QUANTITIES	
PIPE SIZE	CUBIC YARDS
12"	0.029
15"	0.045
18"	0.065
24"	0.116
30"	0.182
36"	0.262
42"	0.356
48"	0.465
54"	0.589
60"	0.727
66"	0.880

NOTE:

EITHER BRICK MASONRY OR CONCRETE MAY BE USED.

CONCRETE BRICK MAY BE USED IN LIEU OF CLAY BRICK. JUMBO BRICK WILL BE PERMITTED.

NOTE:

USE PAY LIMITS (C.Y.) FOR PIPE PLUGS 12" IN THICKNESS ONLY.

SHEET 1 OF 1

840.71

STATE OF
NORTH CAROLINA
DEPT. OF TRANSPORTATION
DIVISION OF HIGHWAYS
RALEIGH, N.C.

1-12

ENGLISH STANDARD DRAWING FOR

CONCRETE AND BRICK PIPE PLUG

SHEET 1 OF 1

840.71

STATE OF
NORTH CAROLINA
DEPT. OF TRANSPORTATION
DIVISION OF HIGHWAYS
RALEIGH, N.C.

1-12

ENGLISH STANDARD DRAWING FOR

PIPE COLLAR

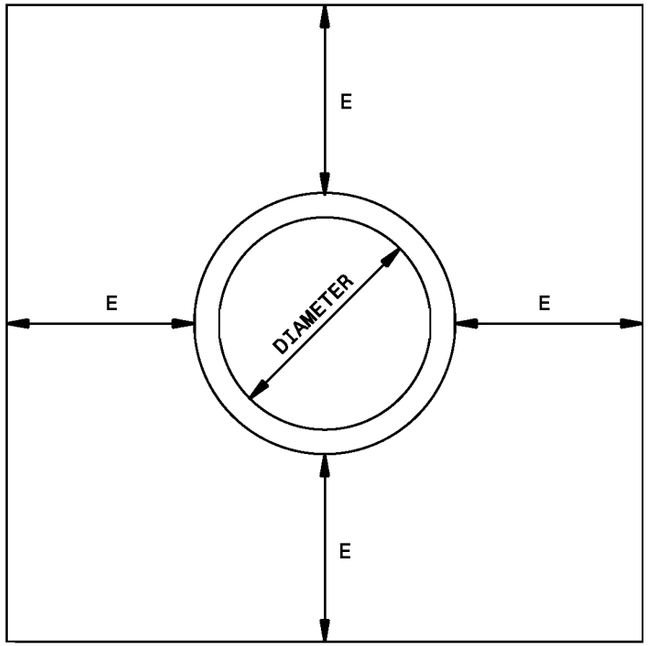

ELEVATION

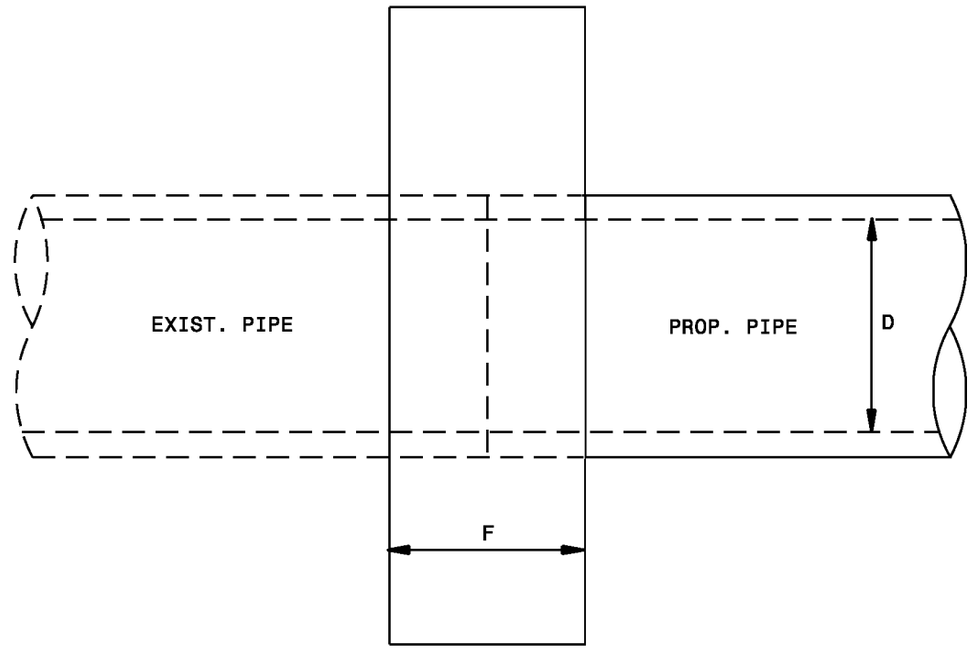

SIDE ELEVATION

GENERAL NOTES:

USE PIPE COLLAR FOR EXTENDING EXISTING CONCRETE PIPE CULVERTS AT LOCATIONS SHOWN ON PLANS OR AS DIRECTED BY THE ENGINEER. THIS INCLUDES EXTENDING EXISTING PIPES WITH PIPES OF DIFFERENT MATERIALS.

CONSTRUCT THE PIPE COLLAR WITH CLASS "B" OR BETTER CONCRETE.

OBSERVE ALL REQUIREMENTS OF SECTION 840 OF THE STANDARD SPECIFICATIONS.

* USE 12 INCH DIAMETER VALUES FOR PIPE DIAMETERS LESS THAN 12 INCH.

D	E	F	CU. YD.
12"	12"	12"	0.3528
15"	12"	12"	0.3990
18"	12"	12"	0.4465
24"	12"	12"	0.5526
30"	12"	12"	0.6560
36"	12"	12"	0.7640
42"	12"	12"	0.8856
48"	12"	12"	1.0126
54"	18"	18"	2.5793
60"	18"	18"	2.8506
66"	18"	18"	3.1307
72"	18"	18"	3.4176

STATE OF
NORTH CAROLINA
DEPT. OF TRANSPORTATION
DIVISION OF HIGHWAYS
RALEIGH, N.C.

1-12

ENGLISH STANDARD DRAWING FOR

PIPE COLLAR

SHEET 1 OF 1

840.72

SHEET 1 OF 1

840.72

STATE OF NORTH CAROLINA
DEPT. OF TRANSPORTATION
DIVISION OF HIGHWAYS
RALEIGH, N.C.

1-12

ENGLISH STANDARD DRAWING FOR

CONCRETE CURB, GUTTER AND CURB & GUTTER

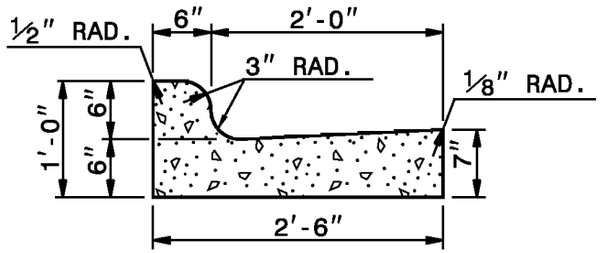

2'-6" CURB AND GUTTER

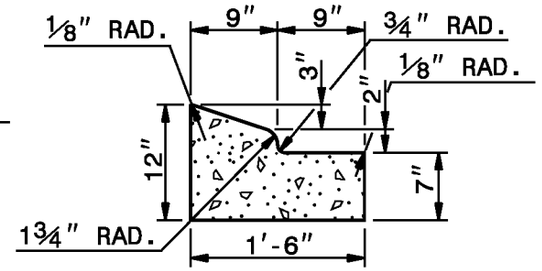

1'-6" CURB AND GUTTER

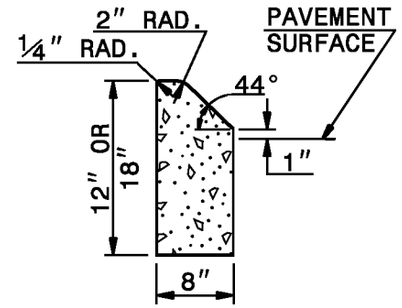

8" X 12" OR 18" CONCRETE CURB

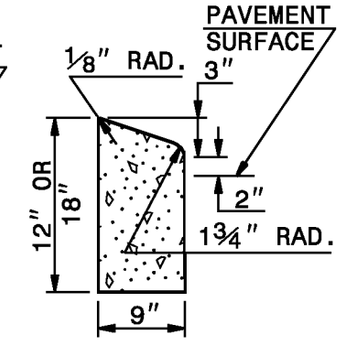

9" X 12" OR 18" CONCRETE CURB

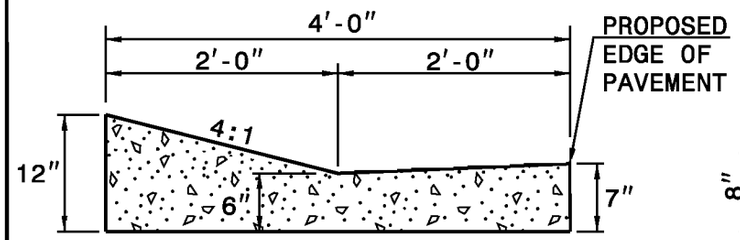

EXPRESSWAY GUTTER

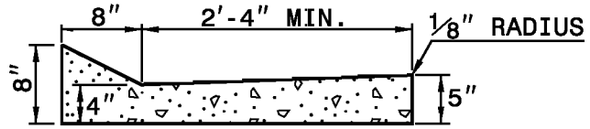

SHOULDER BERM GUTTER

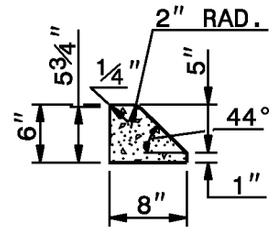

8" X 6" MEDIAN CURB

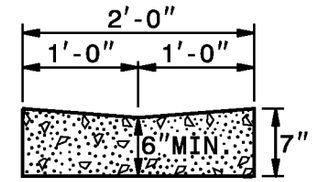

VALLEY GUTTER

SECTION VIEW OF CURBS OR CURBS AND GUTTERS

GENERAL NOTES:
- PLACE CONTRACTION JOINTS AT 10' INTERVALS, EXCEPT THAT A 15' SPACING MAY BE USED WHEN A MACHINE IS USED OR WHEN SATISFACTORY SUPPORT FOR THE FACE FORM CAN BE OBTAINED WITHOUT THE USE OF TEMPLATES AT 10' INTERVALS.
- JOINT SPACING MAY BE ALTERED IF REQUIRED BY THE ENGINEER.
- CONTRACTION JOINTS MAY BE INSTALLED WITH THE USE OF TEMPLATES OR FORMED BY OTHER APPROVED METHODS. CONSTRUCT NON-TEMPLATE FORMED JOINTS A MIN. OF 1½" DEEP.
- FILL ALL CONSTRUCTION JOINTS, EXCEPT IN 8"x6" MEDIAN CURB, WITH JOINT FILLER AND SEALER.
- SPACE EXPANSION JOINTS AT 90' INTERVALS AND ADJACENT TO ALL RIGID OBJECTS.

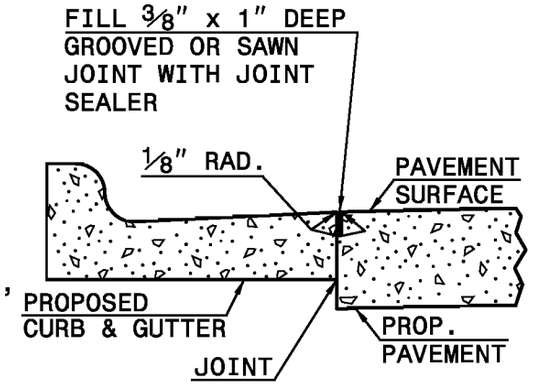

LONGITUDINAL JOINT

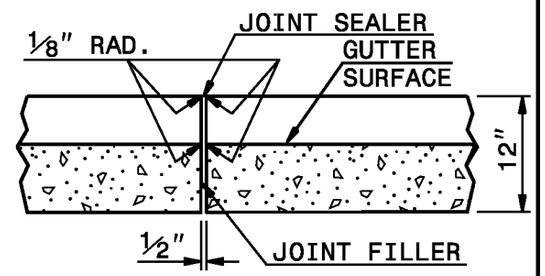

TRANSVERSE EXPANSION JOINT IN CURB AND GUTTER

SECTION VIEW OF JOINTS

STATE OF NORTH CAROLINA
DEPT. OF TRANSPORTATION
DIVISION OF HIGHWAYS
RALEIGH, N.C.

1-12

ENGLISH STANDARD DRAWING FOR

CONCRETE CURB, GUTTER AND CURB & GUTTER

STATE OF
NORTH CAROLINA
DEPT. OF TRANSPORTATION
DIVISION OF HIGHWAYS
RALEIGH, N.C.

1-12

ENGLISH STANDARD DRAWING FOR

CONCRETE CURB, GUTTER AND CURB & GUTTER

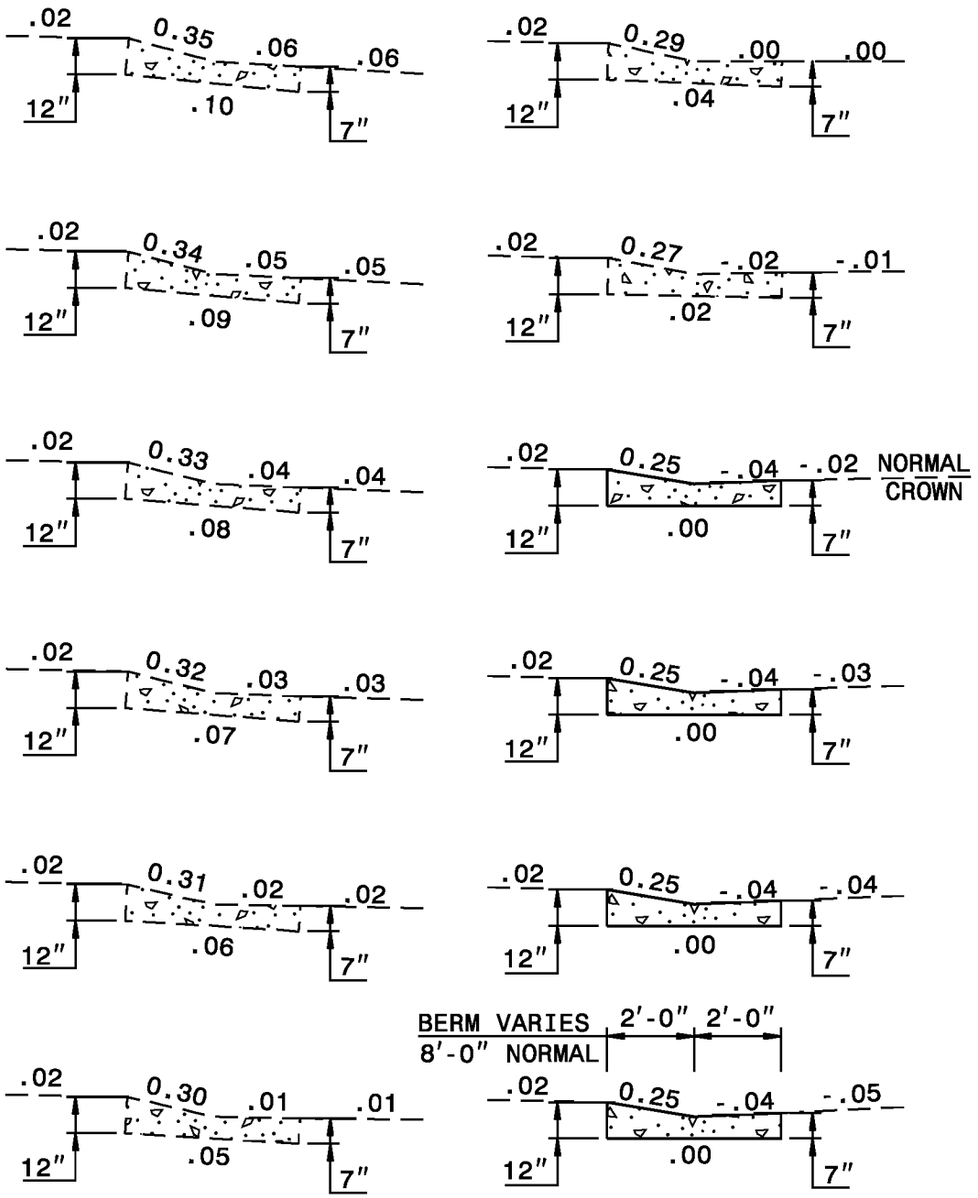

SECTION VIEWS OF EXPRESSWAY GUTTER IN SUPER ELEVATION

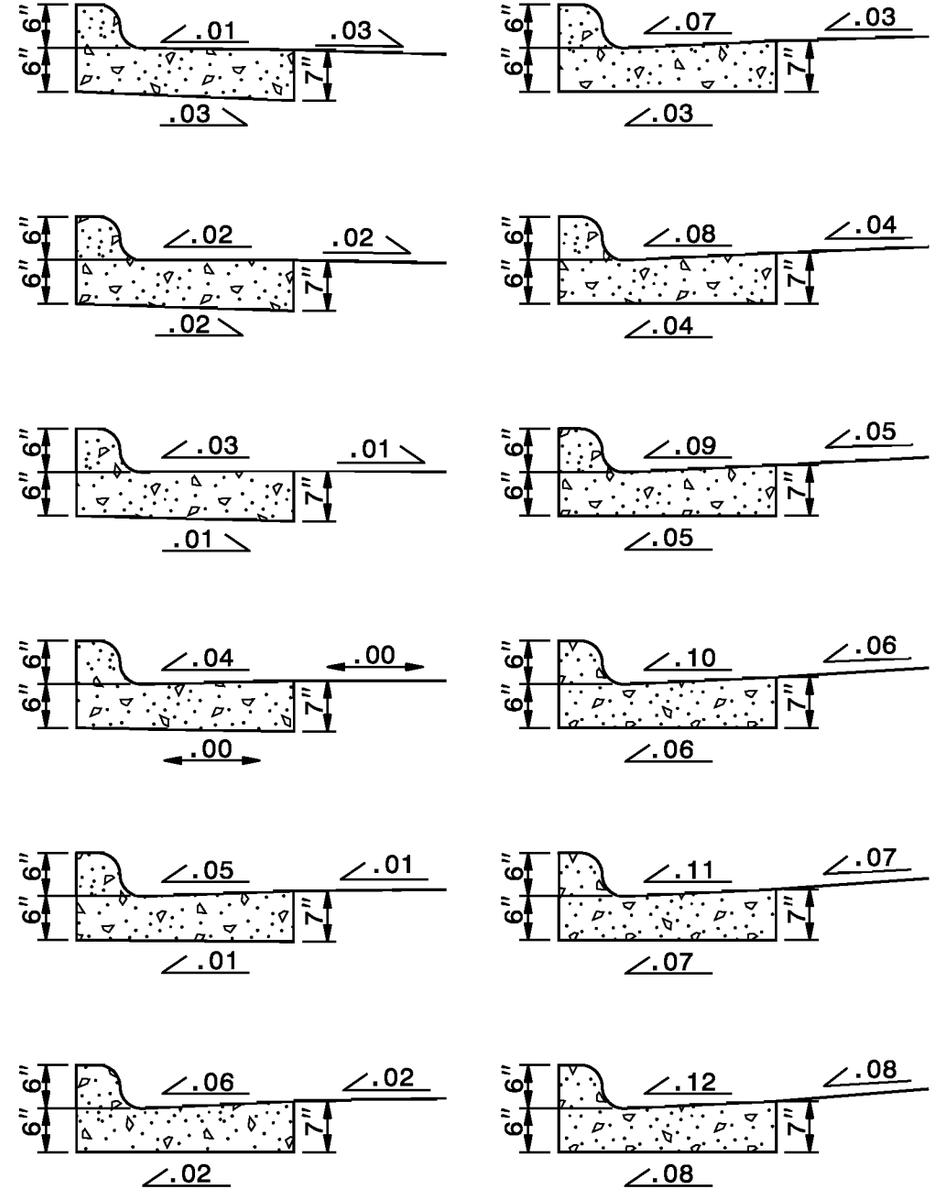

SECTION VIEWS OF 2'-6" CURB AND GUTTER SUPERELEVATION RATES

SHEET 2 OF 3

846.01

STATE OF
NORTH CAROLINA
DEPT. OF TRANSPORTATION
DIVISION OF HIGHWAYS
RALEIGH, N.C.

1-12

ENGLISH STANDARD DRAWING FOR

CONCRETE CURB, GUTTER AND CURB & GUTTER

SHEET 2 OF 3

846.01

STATE OF
NORTH CAROLINA
DEPT. OF TRANSPORTATION
DIVISION OF HIGHWAYS
RALEIGH, N.C.

1-12

ENGLISH STANDARD DRAWING FOR

CONCRETE CURB, GUTTER AND CURB & GUTTER

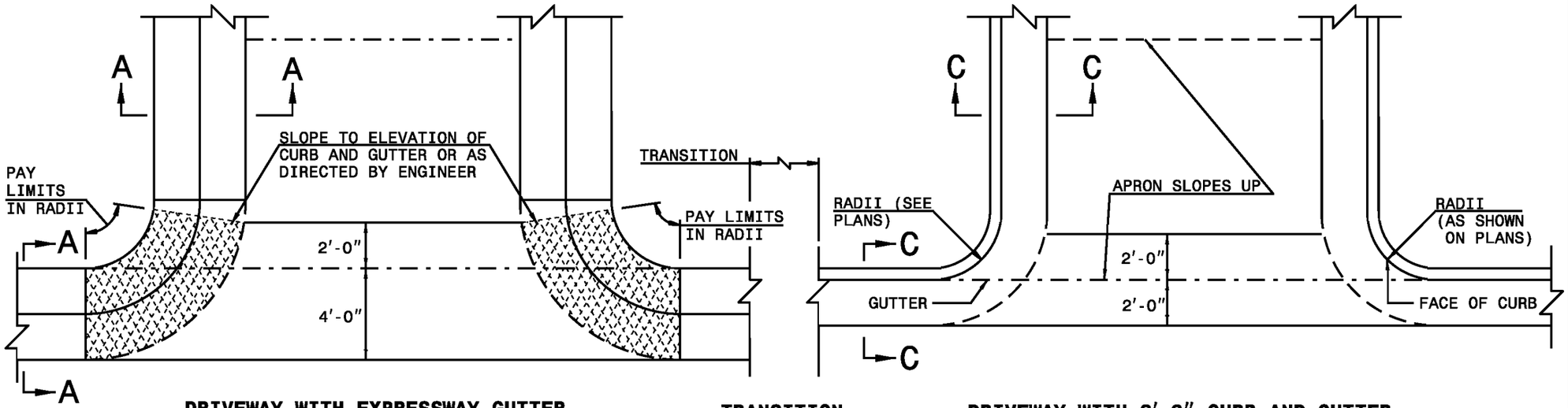

DRIVEWAY WITH EXPRESSWAY GUTTER **TRANSITION** **DRIVEWAY WITH 2'-6" CURB AND GUTTER**

PLAN VIEW OF TYPICAL CURB AND GUTTER OCCURENCES

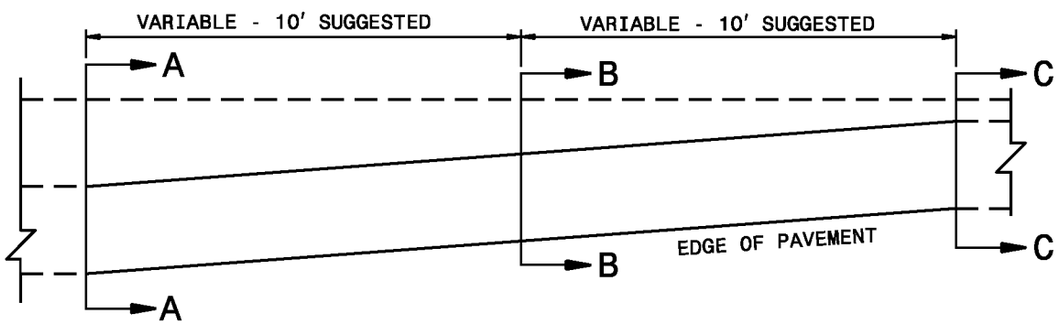

PLAN VIEW OF TRANSITION

EXPRESSWAY GUTTER TO 2'-6" CURB AND GUTTER

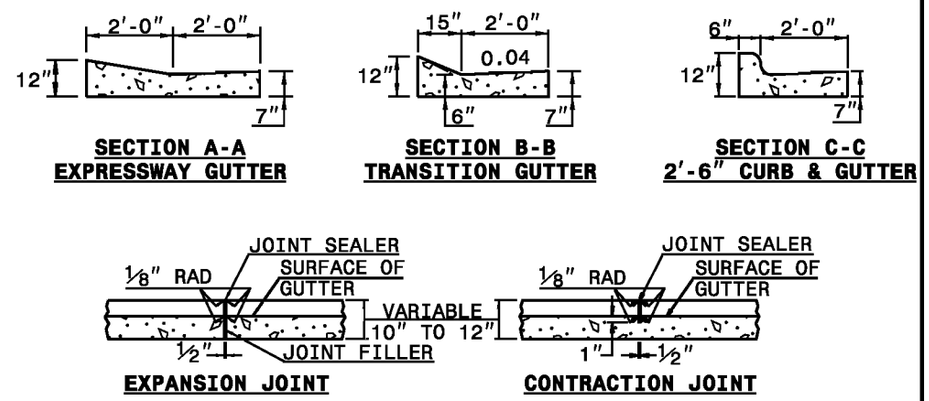

SECTION A-A EXPRESSWAY GUTTER **SECTION B-B TRANSITION GUTTER** **SECTION C-C 2'-6" CURB & GUTTER**

EXPANSION JOINT **CONTRACTION JOINT**

NOTES:
- IN THE TRANSITION FROM 4'-0" CONCRETE EXPRESSWAY GUTTER TO 2'-6" CONCRETE CURB AND GUTTER, PLACE ½" EXPANSION JOINTS AT 25' INTERVALS.
- PLACE GROOVE JOINTS 1" DEEP AT 12'-6" INTERVALS BETWEEN EXPANSION JOINTS.
- FILL AND SEAL THE TOP ½" OF THE EXPANSION JOINTS AND 1" OF CONTRACTION JOINTS WITH APPROVED JOINT SEALING COMPOUND.

STATE OF
NORTH CAROLINA
DEPT. OF TRANSPORTATION
DIVISION OF HIGHWAYS
RALEIGH, N.C.

1-12

ENGLISH STANDARD DRAWING FOR

CONCRETE CURB, GUTTER AND CURB & GUTTER

STATE OF
NORTH CAROLINA
DEPT. OF TRANSPORTATION
DIVISION OF HIGHWAYS
RALEIGH, N.C.

1-12

ENGLISH STANDARD DRAWING FOR

DROP INLET INSTALLATION IN EXPRESSWAY GUTTER

SHEET 1 OF 1

846.02

GENERAL NOTES:
- PAY FOR TRANSITION SECTION AS CONCRETE EXPRESSWAY GUTTER.
- GUARDRAIL OPTIONAL

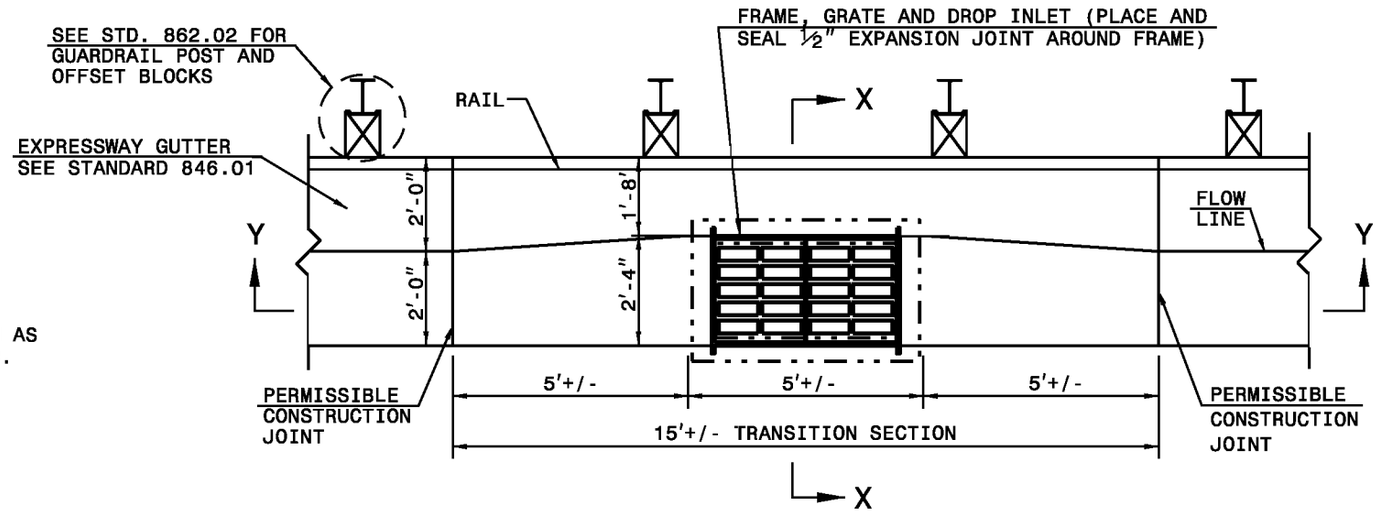

PLAN

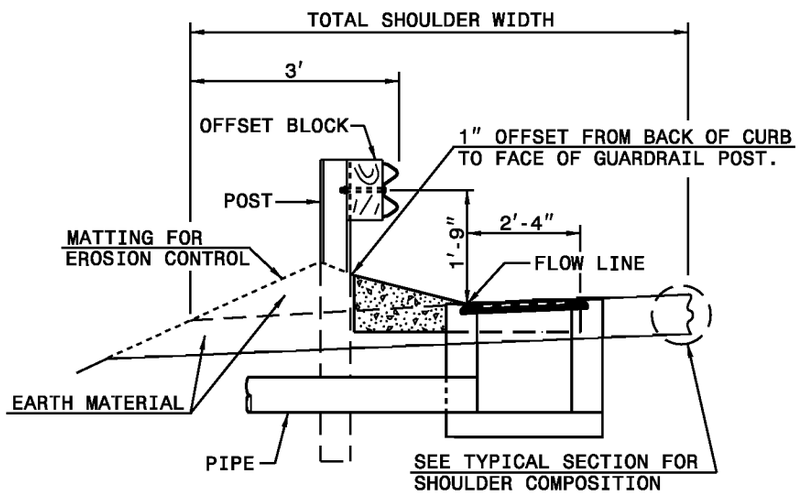

SECTION X-X

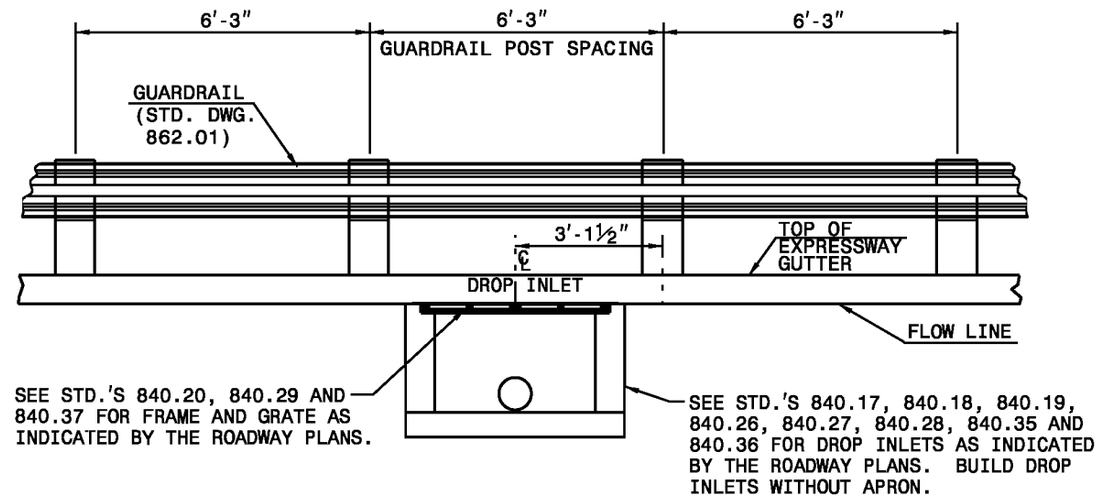

SECTION Y-Y

DROP INLET INSTALLATION IN EXPRESSWAY GUTTER

STATE OF
NORTH CAROLINA
DEPT. OF TRANSPORTATION
DIVISION OF HIGHWAYS
RALEIGH, N.C.

1-12

ENGLISH STANDARD DRAWING FOR

DROP INLET INSTALLATION IN EXPRESSWAY GUTTER

SHEET 1 OF 1

846.02

STATE OF
NORTH CAROLINA
DEPT. OF TRANSPORTATION
DIVISION OF HIGHWAYS
RALEIGH, N.C.

1-12

ENGLISH STANDARD DRAWING FOR

FUNNEL DRAIN INSTALLATION IN SHOULDER BERM GUTTER

SHEET 1 OF 2

846.03

* CENTER FUNNEL DRAIN AND APRON IN THIS LOCATION.

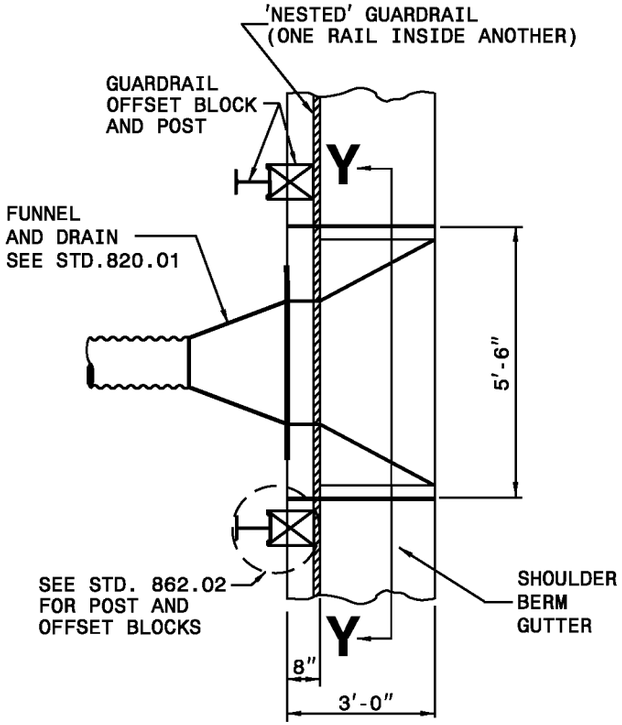

PLAN

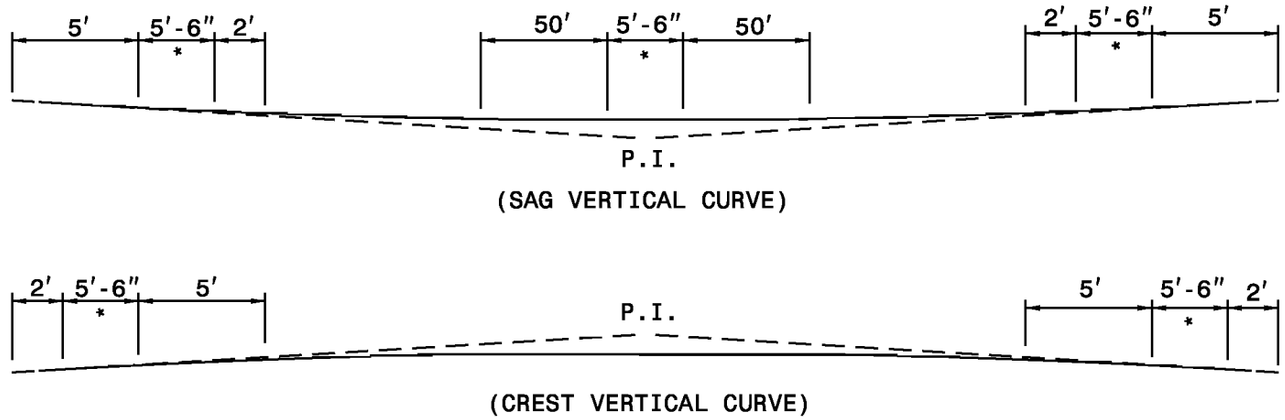

GUIDE FOR PLACING FUNNELS IN MINIMUM LENGTHS OF SHOULDER BERM GUTTER

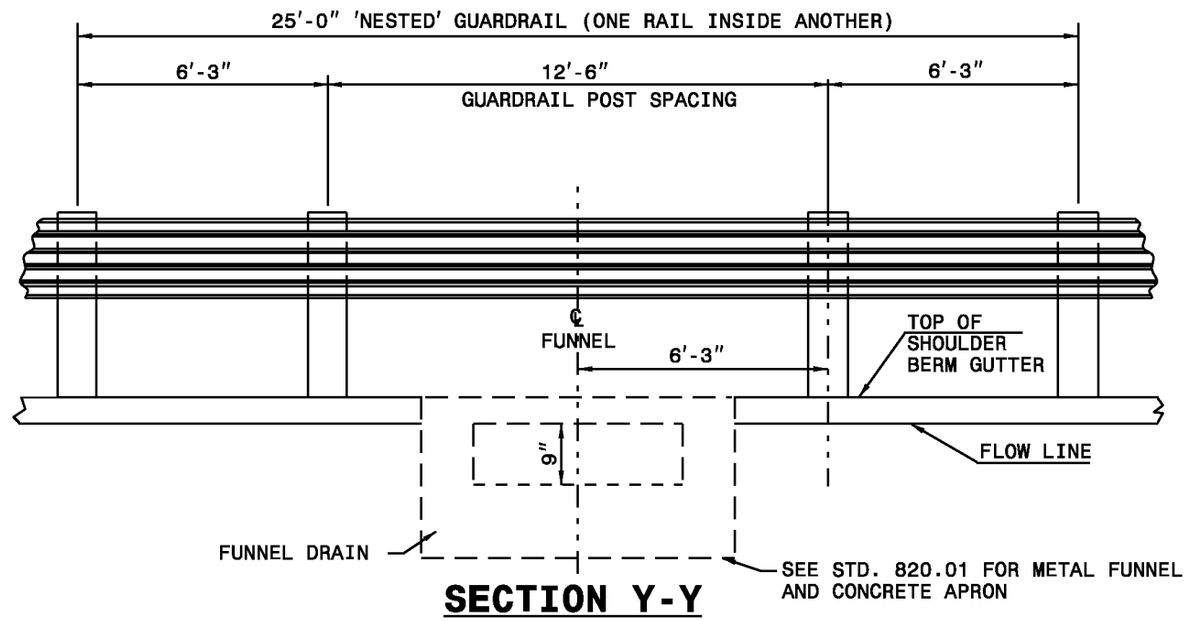

SECTION Y-Y

FUNNEL INSTALLATION IN SHOULDER BERM GUTTER

STATE OF
NORTH CAROLINA
DEPT. OF TRANSPORTATION
DIVISION OF HIGHWAYS
RALEIGH, N.C.

1-12

ENGLISH STANDARD DRAWING FOR

FUNNEL DRAIN INSTALLATION IN SHOULDER BERM GUTTER

SHEET 1 OF 2

846.03

STATE OF NORTH CAROLINA
DEPT. OF TRANSPORTATION
DIVISION OF HIGHWAYS
RALEIGH, N.C.

1-12

ENGLISH STANDARD DRAWING FOR

FUNNEL DRAIN INSTALLATION IN SHOULDER BERM GUTTER

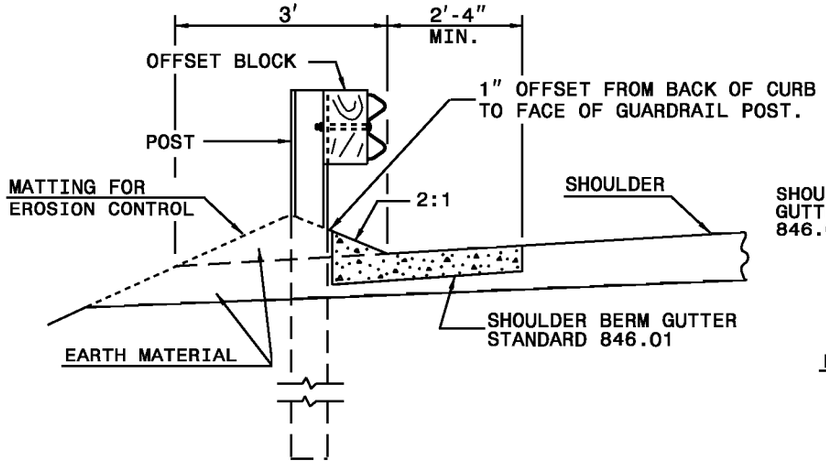

SECTION A-A

SHOULDER BERM WITH SHOULDER BERM GUTTER

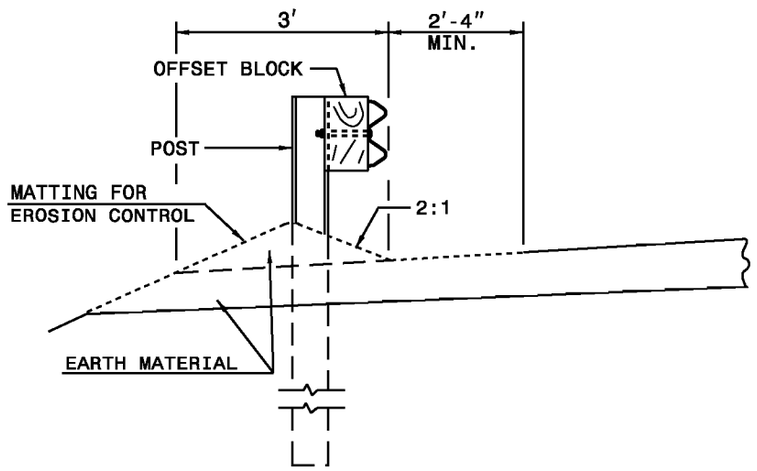

SECTION B-B

SHOULDER BERM WITH MATTING FOR EROSION CONTROL

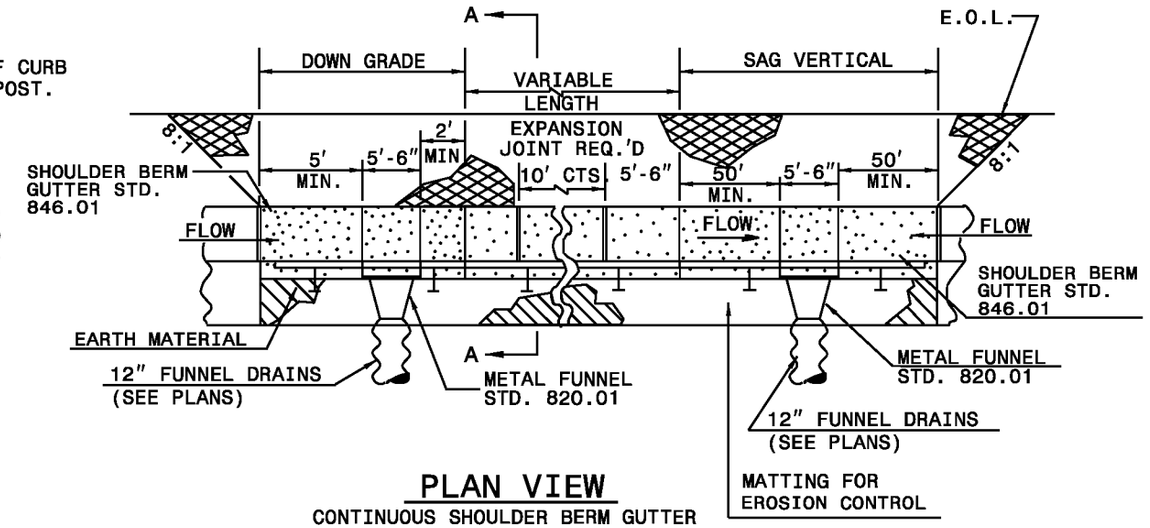

PLAN VIEW

CONTINUOUS SHOULDER BERM GUTTER

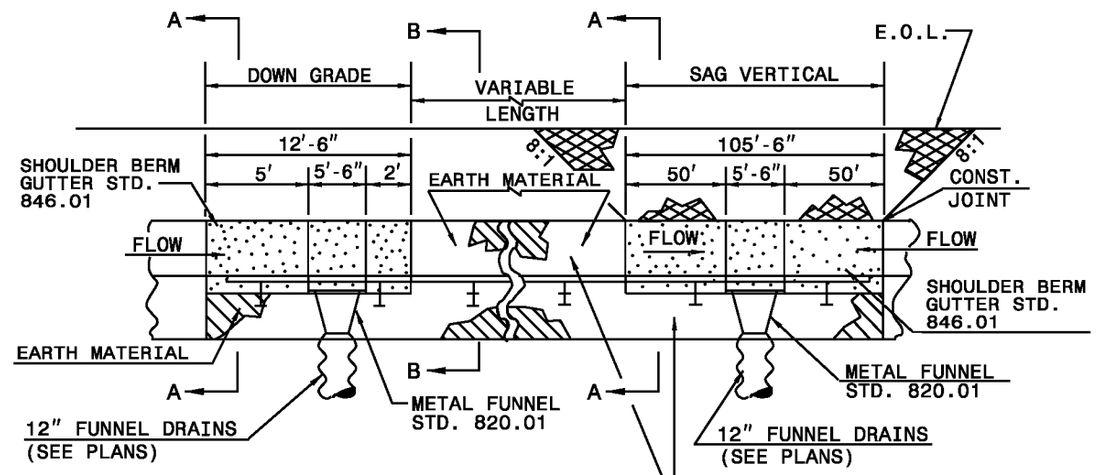

PLAN VIEW

MIN. SHOULDER BERM GUTTER

SYMBOLS

- SHOULDER BERM GUTTER
- MATTING FOR EROSION CONTROL
- PAVED SHOULDER

SHOULDER BERM, SHOULDER BERM GUTTER AND FUNNEL DRAIN ADJACENT TO GUARDRAIL

SHEET 2 OF 2

846.03

STATE OF NORTH CAROLINA
DEPT. OF TRANSPORTATION
DIVISION OF HIGHWAYS
RALEIGH, N.C.

1-12

ENGLISH STANDARD DRAWING FOR

FUNNEL DRAIN INSTALLATION IN SHOULDER BERM GUTTER

SHEET 2 OF 2

846.03

STATE OF NORTH CAROLINA
DEPT. OF TRANSPORTATION
DIVISION OF HIGHWAYS
RALEIGH, N.C.

1-12

ENGLISH STANDARD DRAWING FOR

DROP INLET INSTALLATION IN SHOULDER BERM GUTTER

SHEET 1 OF 1

846.04

* CENTER DROP INLET IN THIS LOCATION.

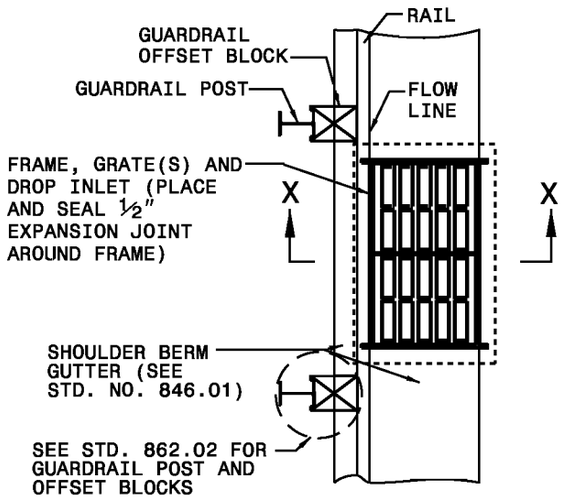

PLAN

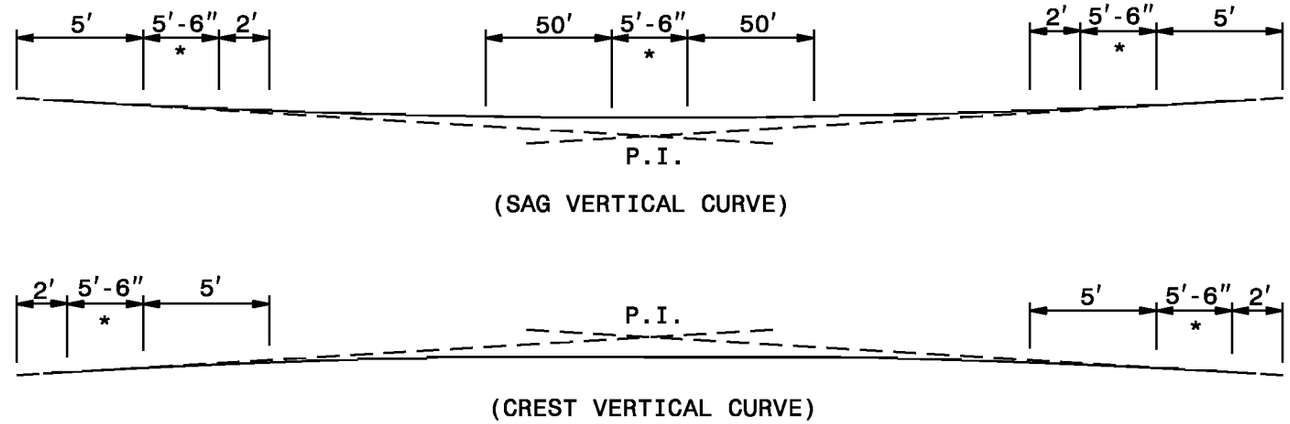

GUIDE FOR PLACING DROP INLETS IN MINIMUM LENGTHS OF SHOULDER BERM GUTTER

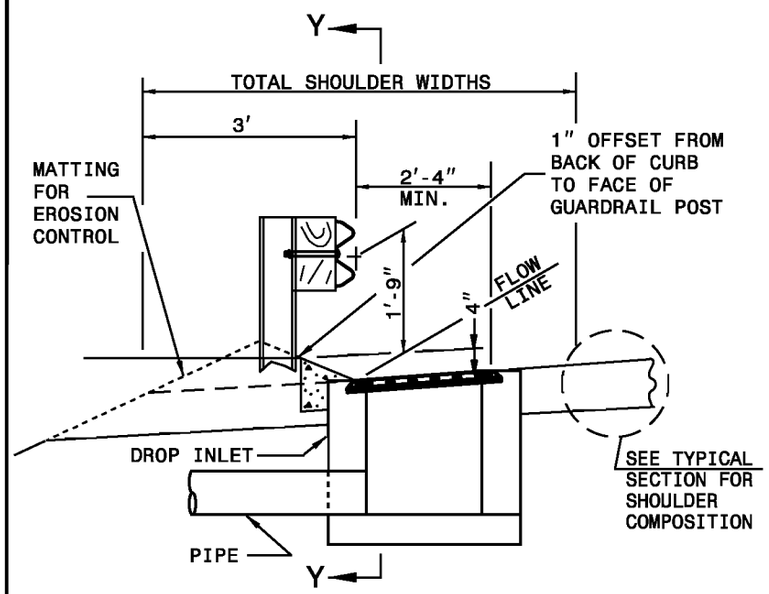

SECTION X-X

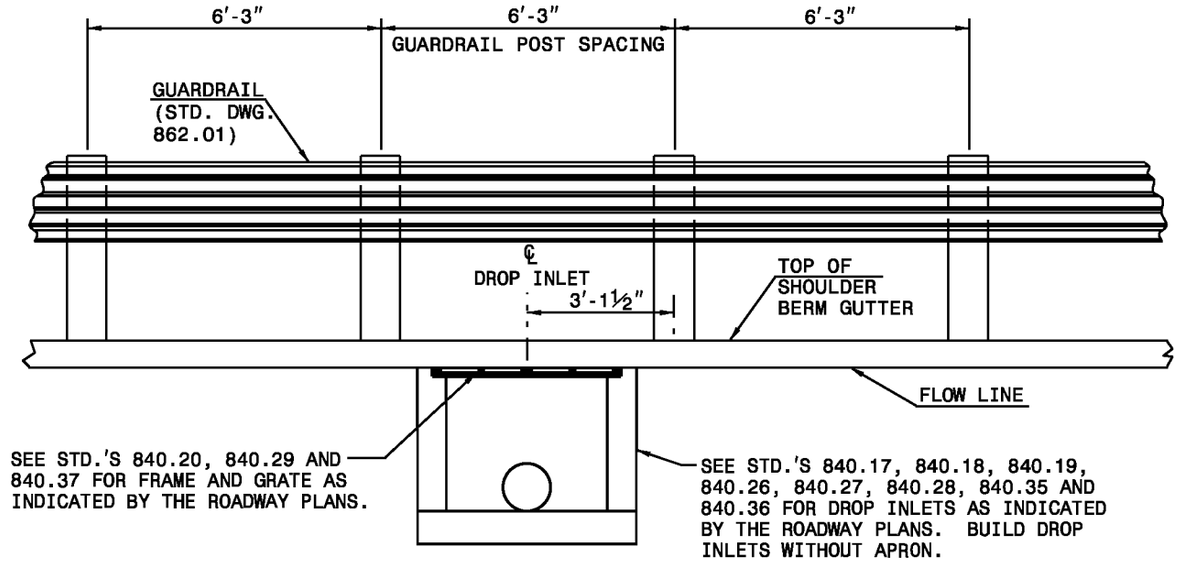

SECTION Y-Y

DROP INLET INSTALLATION IN SHOULDER BERM GUTTER

STATE OF NORTH CAROLINA
DEPT. OF TRANSPORTATION
DIVISION OF HIGHWAYS
RALEIGH, N.C.

1-12

ENGLISH STANDARD DRAWING FOR

DROP INLET INSTALLATION IN SHOULDER BERM GUTTER

SHEET 1 OF 1

846.04

STATE OF NORTH CAROLINA
DEPT. OF TRANSPORTATION
DIVISION OF HIGHWAYS
RALEIGH, N.C.

1-12

ENGLISH STANDARD DRAWING FOR

CONCRETE SIDEWALK

NOTES:

CONSTRUCT STANDARD SIDEWALK 5′ WIDE AND 4″ THICK UNLESS OTHERWISE DENOTED ON PLANS.

PLACE A GROOVE JOINT 1″ DEEP WITH ⅛″ RADII IN THE CONCRETE SIDEWALK AT 5′ INTERVALS. ONE ½″ EXPANSION JOINT WILL BE REQUIRED AT 50′ INTERVALS. A ½″ EXPANSION JOINT WILL BE REQUIRED WHERE THE SIDEWALK JOINS ANY RIGID STRUCTURE.

SEE STD. DWG. 848.05 FOR WHEELCHAIR RAMP LOCATION REQUIREMENTS AND CONSTRUCTION GUIDELINES.

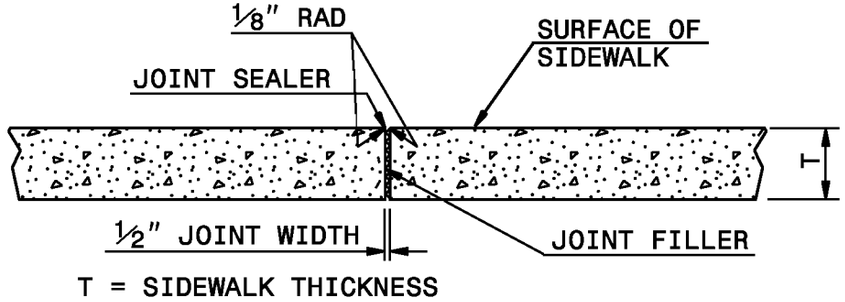

TRANSVERSE EXPANSION JOINT IN SIDEWALK

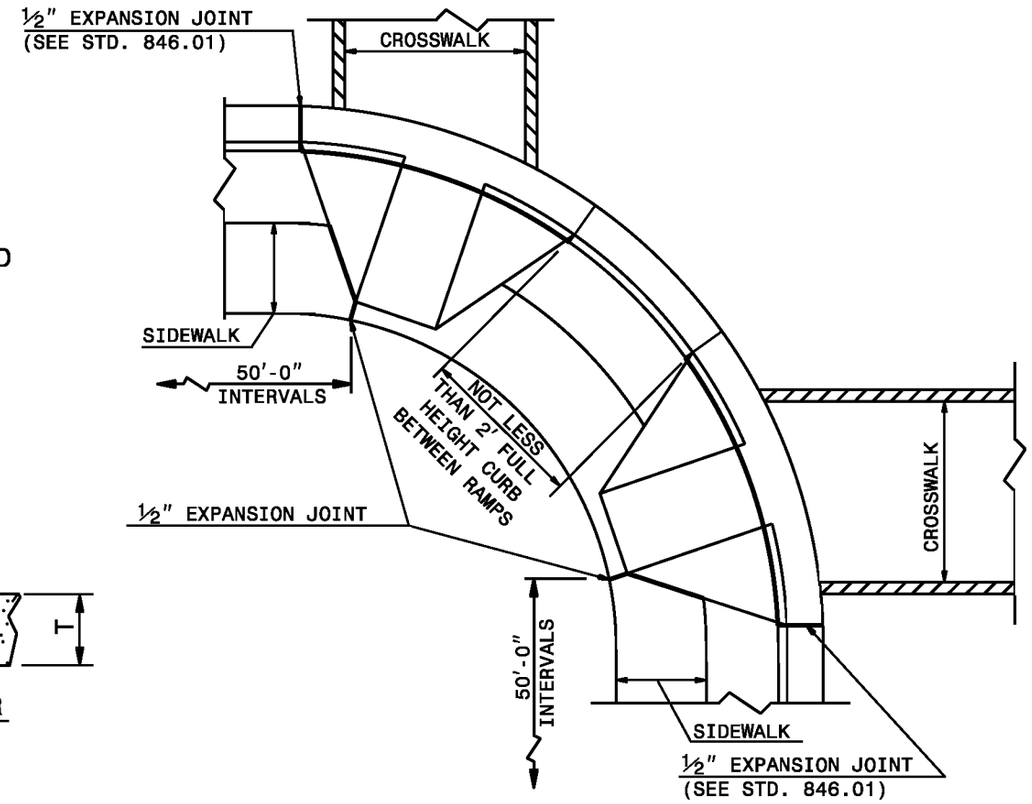

PLAN VIEW

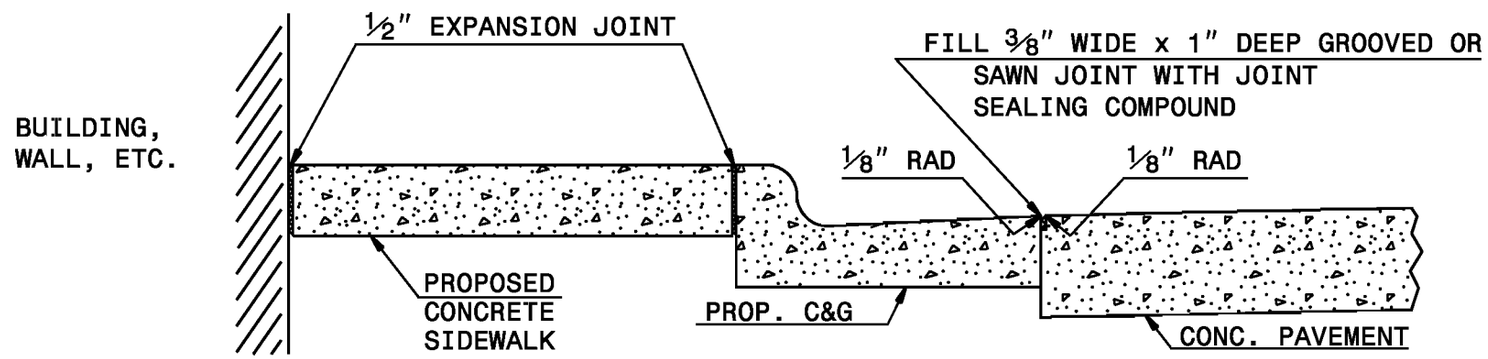

DETAILS SHOWING JOINTS IN CONCRETE SIDEWALK

SHEET 1 OF 1

848.01

STATE OF NORTH CAROLINA
DEPT. OF TRANSPORTATION
DIVISION OF HIGHWAYS
RALEIGH, N.C.

1-12

ENGLISH STANDARD DRAWING FOR

CONCRETE SIDEWALK

SHEET 1 OF 1

848.01

STATE OF
NORTH CAROLINA
DEPT. OF TRANSPORTATION
DIVISION OF HIGHWAYS
RALEIGH, N.C.

1-12

ENGLISH STANDARD DRAWING FOR

DRIVEWAY TURNOUT

RADIUS TYPE

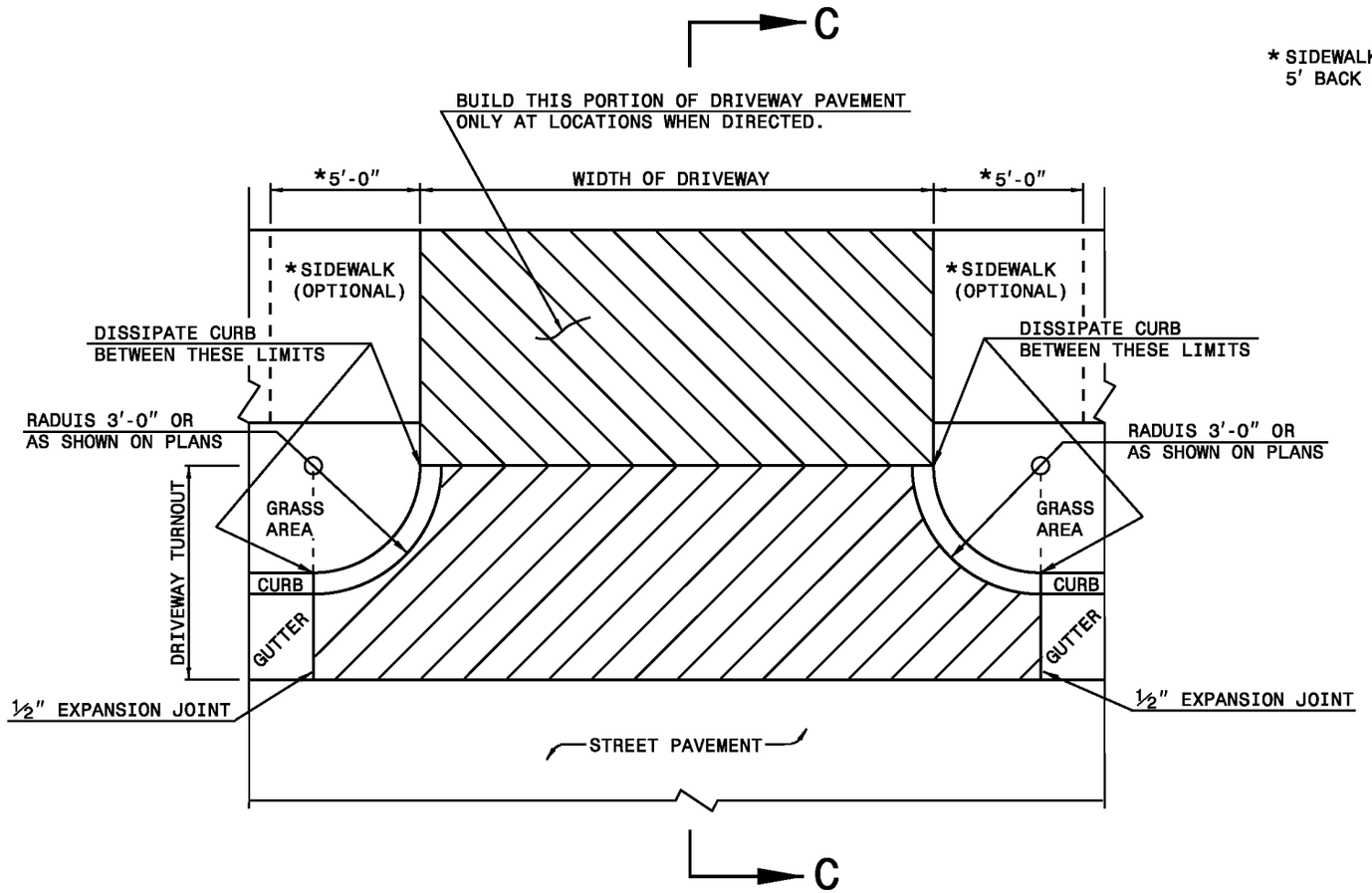

*SIDEWALK TAPERS DOWN
5' BACK FROM DRIVEWAY.

PLAN
DETAIL OF DRIVEWAY

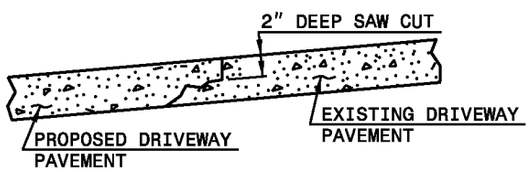

METHOD OF TIE IN

WHEN EXISTING DRIVEWAY PAVEMENT IS CONCRETE, SAW CUT 2" DEEP JOINT AT THE POINT OF TIE-IN. SAW JOINT PERPENDICULAR TO EDGE OF EXISTING DRIVEWAY PAVEMENT.

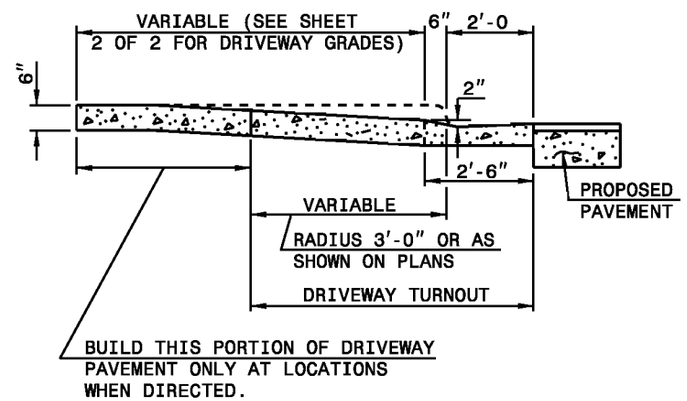

SECTION C-C

SHEET 1 OF 2

848.02

STATE OF
NORTH CAROLINA
DEPT. OF TRANSPORTATION
DIVISION OF HIGHWAYS
RALEIGH, N.C.

1-12

ENGLISH STANDARD DRAWING FOR

DRIVEWAY TURNOUT

RADIUS TYPE

SHEET 1 OF 2

848.02

STATE OF
NORTH CAROLINA
DEPT. OF TRANSPORTATION
DIVISION OF HIGHWAYS
RALEIGH, N.C.

1-12

ENGLISH STANDARD DRAWING FOR

DRIVEWAY TURNOUT

DRIVEWAY GRADES

SHEET 2 OF 2

848.02

DESIRABLE DRIVEWAY GRADES

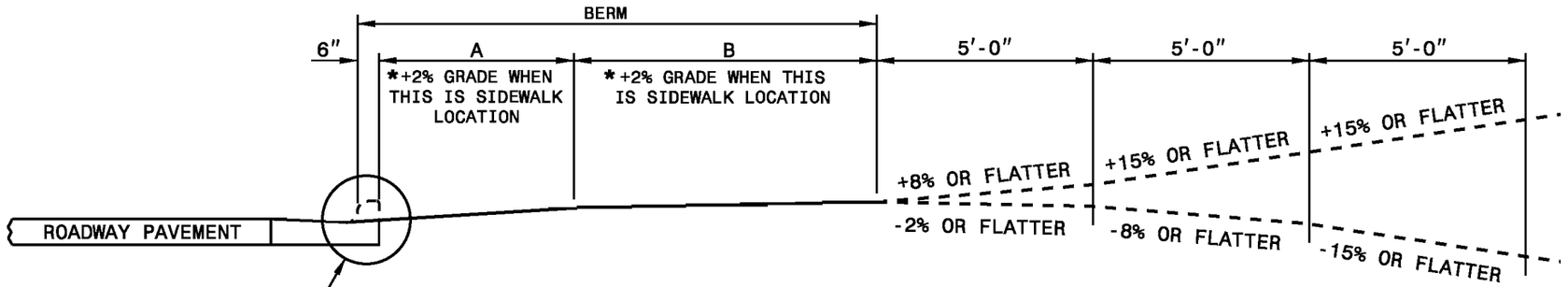

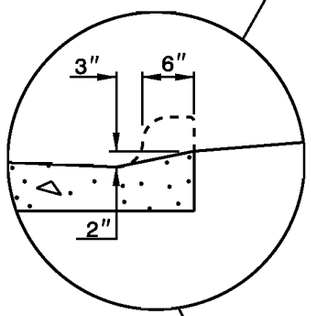

*SIDEWALK LOCATION
(DO NOT PLACE SIDEWALK ON BERMS LESS THAN 6' WIDE.)

DESIRABLE OR MAXIMUM DRIVEWAY GRADES				
BERM WIDTH	A		B	
	DIST.	GRADE	DIST.	GRADE
8' OR LESS	5'-0"	+2%*	2'-6"	+5%
8' OR LESS	2'-0"	+6%	5'-6"	+2%*
10'	4'-0"	+4%	5'-6"	+2%*
12' & OVER	4'-6"	+4%	7'-0"	+2%*

MAXIMUM DRIVEWAY GRADES

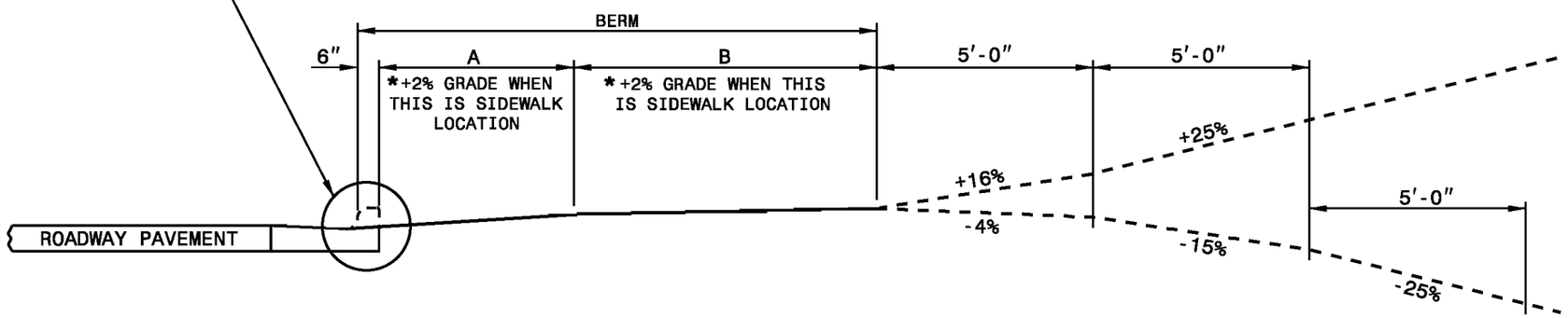

STATE OF
NORTH CAROLINA
DEPT. OF TRANSPORTATION
DIVISION OF HIGHWAYS
RALEIGH, N.C.

1-12

ENGLISH STANDARD DRAWING FOR

DRIVEWAY TURNOUT

DRIVEWAY GRADES

SHEET 2 OF 2

848.02

STATE OF
NORTH CAROLINA
DEPT. OF TRANSPORTATION
DIVISION OF HIGHWAYS
RALEIGH, N.C.

1-12

ENGLISH STANDARD DRAWING FOR

DRIVEWAY TURNOUT

DROP CURB TYPE

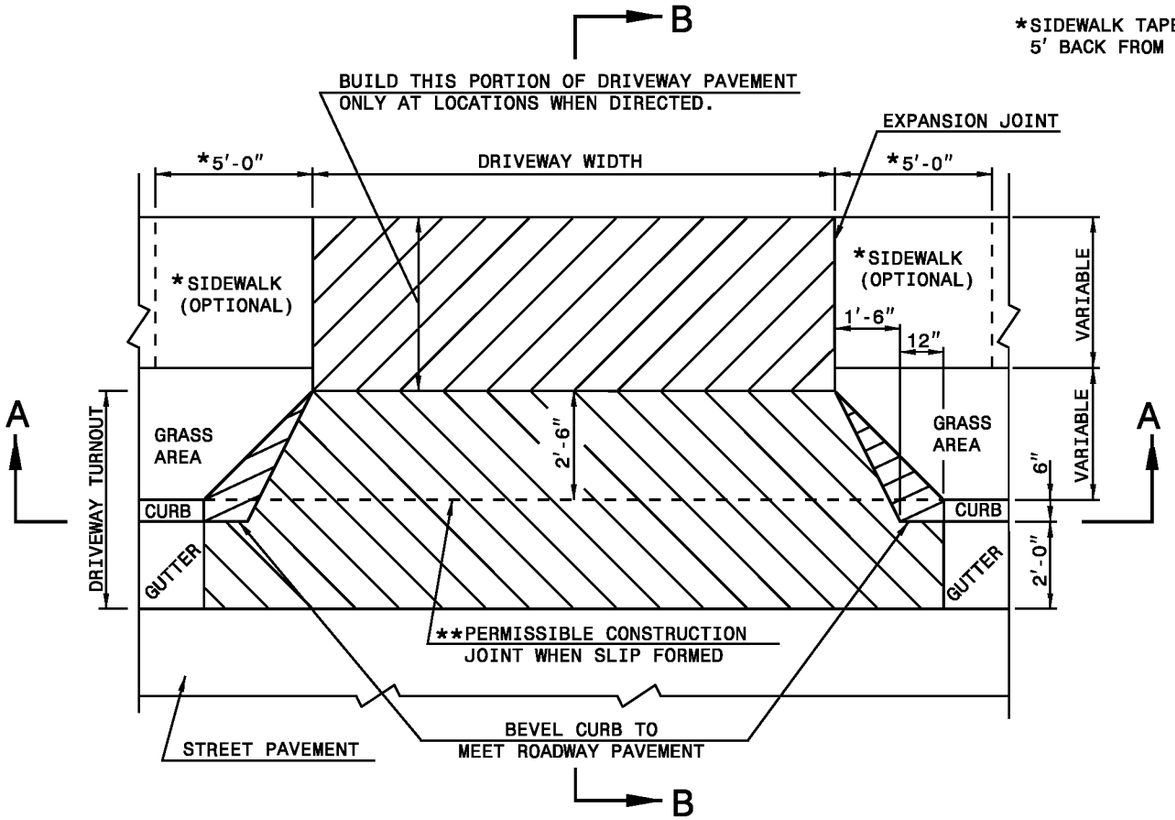

PLAN
DETAIL OF DRIVEWAY

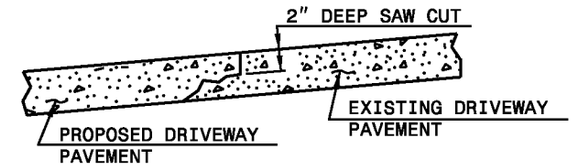

METHOD OF TIE IN

WHEN EXISTING DRIVEWAY PAVEMENT IS CONCRETE, SAW CUT 2" DEEP JOINT AT THE POINT OF TIE-IN. SAW JOINT PERPENDICULAR TO EDGE OF EXISTING DRIVEWAY PAVEMENT.

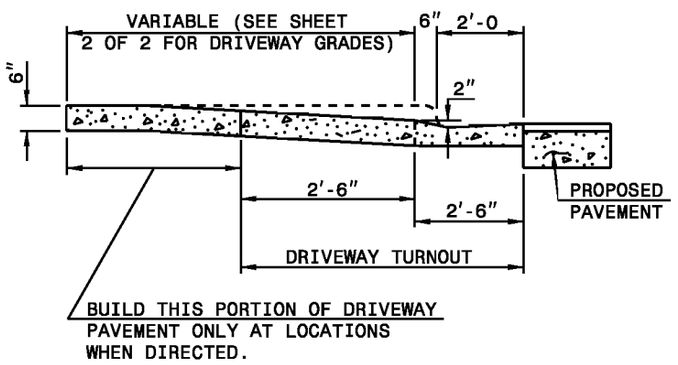

SECTION B-B

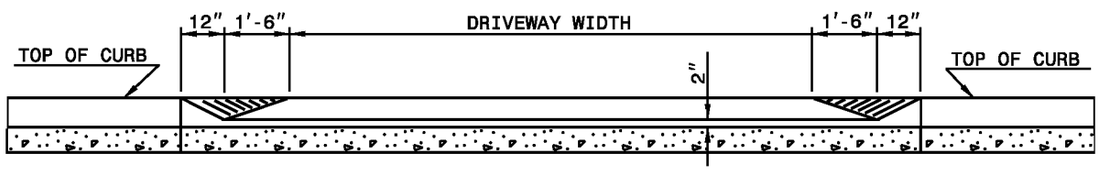

SECTION A-A

GENERAL NOTES:

**NO CONSTRUCTION JOINT WILL BE PERMITTED IF FORMS ARE USED TO CAST DRIVEWAY. SLIP FORMING OF CURB AND GUTTER PERMITS THE USE OF CONSTRUCTION JOINT.

SHEET 1 OF 2

848.03

STATE OF
NORTH CAROLINA
DEPT. OF TRANSPORTATION
DIVISION OF HIGHWAYS
RALEIGH, N.C.

1-12

ENGLISH STANDARD DRAWING FOR

DRIVEWAY TURNOUT

DROP CURB TYPE

SHEET 1 OF 2

848.03

STATE OF
NORTH CAROLINA
DEPT. OF TRANSPORTATION
DIVISION OF HIGHWAYS
RALEIGH, N.C.

1-12

ENGLISH STANDARD DRAWING FOR

DRIVEWAY TURNOUT

DRIVEWAY GRADES

SHEET 2 OF 2

848.03

DESIRABLE DRIVEWAY GRADES

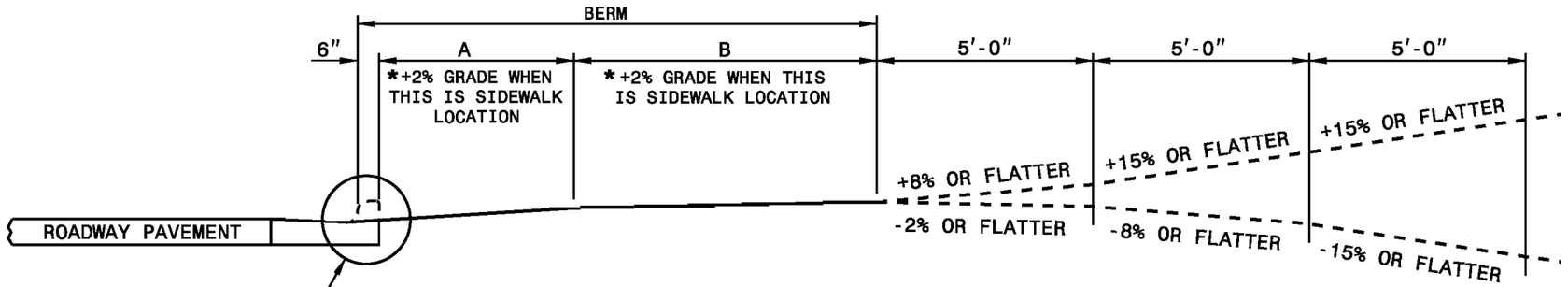

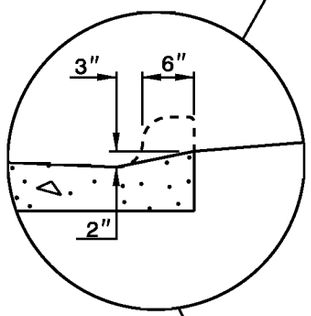

*SIDEWALK LOCATION
(DO NOT PLACE SIDEWALK ON BERMS LESS THAN 6' WIDE.)

DESIRABLE OR MAXIMUM DRIVEWAY GRADES

BERM WIDTH	A		B	
	DIST.	GRADE	DIST.	GRADE
8' OR LESS	5'-0"	+2%*	2'-6"	+5%
8' OR LESS	2'-0"	+6%	5'-6"	+2%*
10'	4'-0"	+4%	5'-6"	+2%*
12' & OVER	4'-6"	+4%	7'-0"	+2%*

MAXIMUM DRIVEWAY GRADES

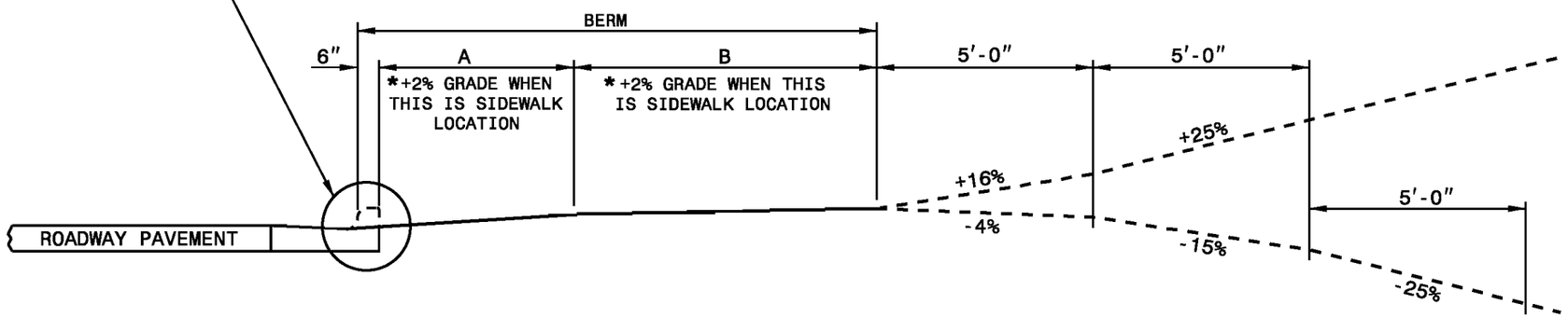

STATE OF
NORTH CAROLINA
DEPT. OF TRANSPORTATION
DIVISION OF HIGHWAYS
RALEIGH, N.C.

1-12

ENGLISH STANDARD DRAWING FOR

DRIVEWAY TURNOUT

DRIVEWAY GRADES

SHEET 2 OF 2

848.03

STATE OF
NORTH CAROLINA
DEPT. OF TRANSPORTATION
DIVISION OF HIGHWAYS
RALEIGH, N.C.

1-12

ENGLISH STANDARD DRAWING FOR

STREET TURNOUT

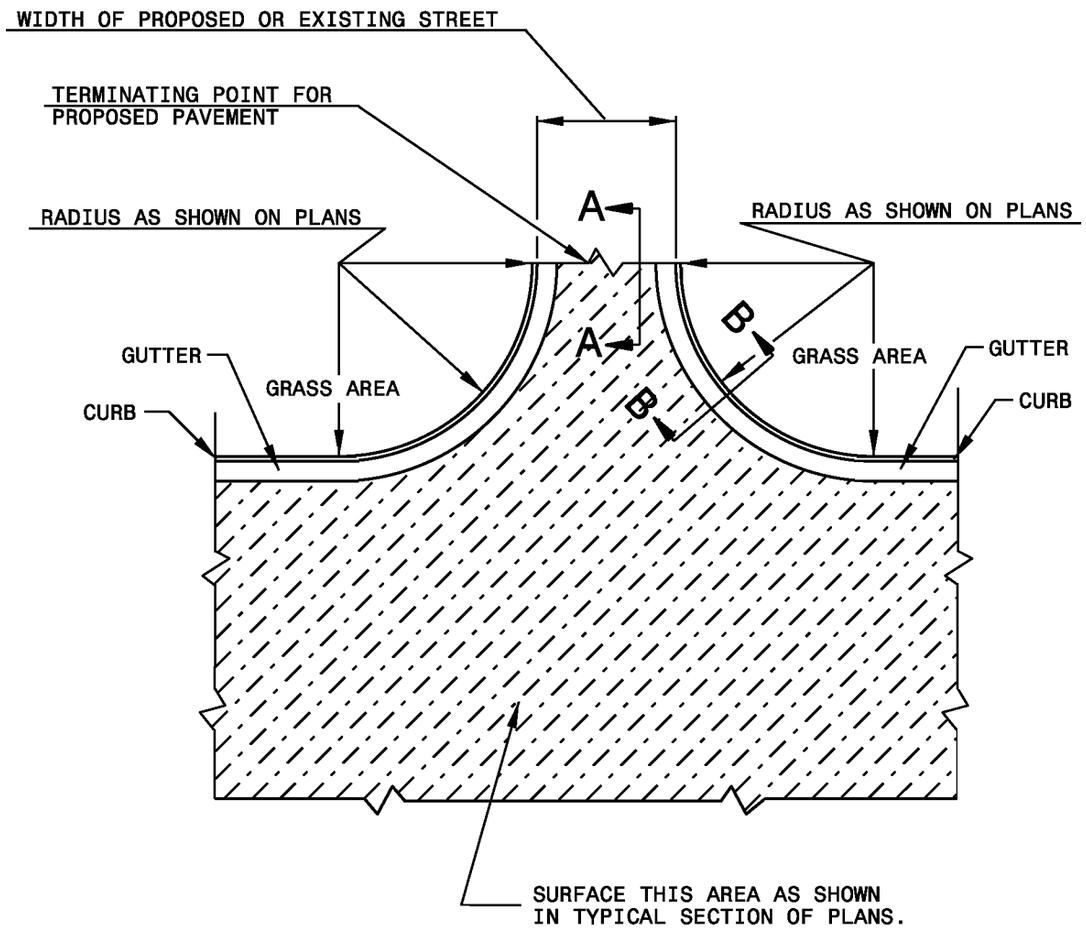

PARTIAL PLAN OF PAVED STREET TURNOUT

USE ON PROPOSED AND EXISTING STREET INTERSECTIONS OR MAJOR TYPE COMMERICAL ENTRANCES.

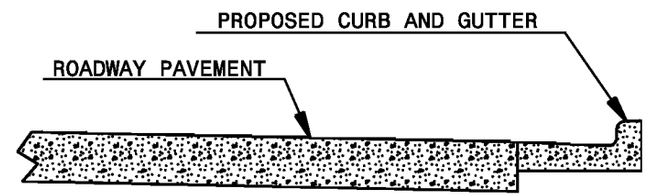

SECTION B-B

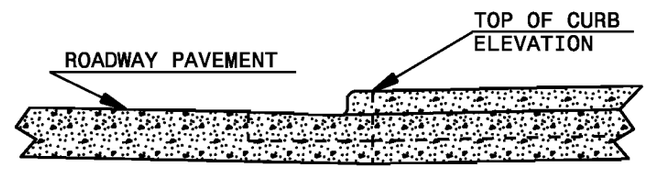

SECTION A-A

STATE OF
NORTH CAROLINA
DEPT. OF TRANSPORTATION
DIVISION OF HIGHWAYS
RALEIGH, N.C.

1-12

ENGLISH STANDARD DRAWING FOR

STREET TURNOUT

SHEET 1 OF 1

848.04

SHEET 1 OF 1

848.04

STATE OF NORTH CAROLINA
DEPT. OF TRANSPORTATION
DIVISION OF HIGHWAYS
RALEIGH, N.C.

1-12

ENGLISH STANDARD DRAWING FOR

CURB RAMP

PROPOSED CURB AND GUTTER

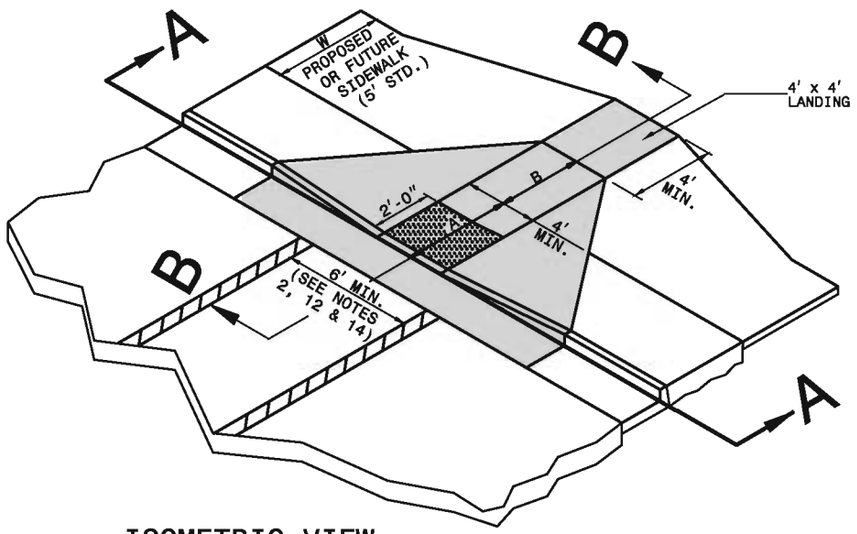

ISOMETRIC VIEW

PAY LIMITS FOR CURB RAMP

NOTES:
1. DETECTABLE WARNING DOMES WILL COVER 2'-0" LENGTH AND FULL WIDTH OF THE RAMP FLOOR AS SHOWN ON THE DETAILS.
2. DETECTABLE WARNING DOMES WILL CONTRAST VISIBILITY WITH ADJOINING SURFACE, EITHER LIGHT-ON-DARK, OR DARK-ON-LIGHT SEQUENCE COVERING THE ENTIRE RAMP.

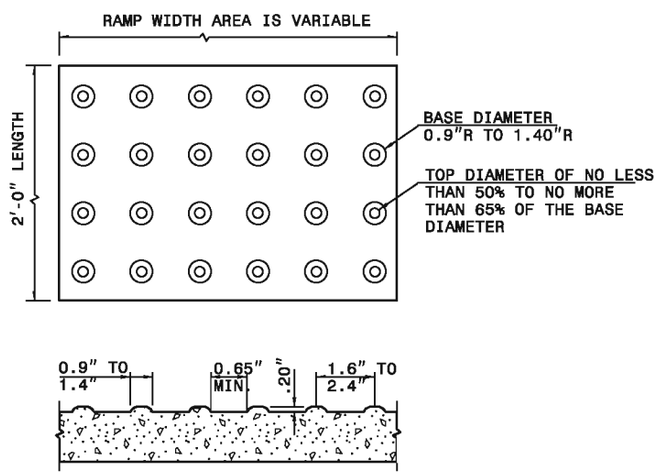

DETECTABLE WARNING DOMES

W	A	W+A+9"	X	B
5'	0.0'	5.8'	5.8'	5.0'*
6'	0.0'	6.8'	6.8'	6.0'**
7'	0.0'	7.8'	7.3'	6.5'**
8'	0.0'	8.8'	7.3'	6.5'**
5'	2.0'	7.8'	7.8'	5.0'
5'	2.5'	8.3'	8.1'	4.8'
5'	3.0'	8.8'	8.3'	4.4'
5'	3.5'	9.3'	8.4'	4.1'
5'	4.0'	9.8'	8.6'	3.8'
5'	4.5'	10.3'	8.7'	3.4'
5'	5.0'	10.8'	8.9'	3.1'

B = X-(A+9")
B = DISTANCE FROM FRONT EDGE OF SIDEWALK TO BACK POINT OF 12:1 (8.33%) SLOPE.
* BACK OF SIDEWALK DROP REQUIRED FOR ALL SIDEWALK SLOPES.
** BACK OF SIDEWALK DROP REQUIRED FOR SIDEWALK SLOPES 0.04.

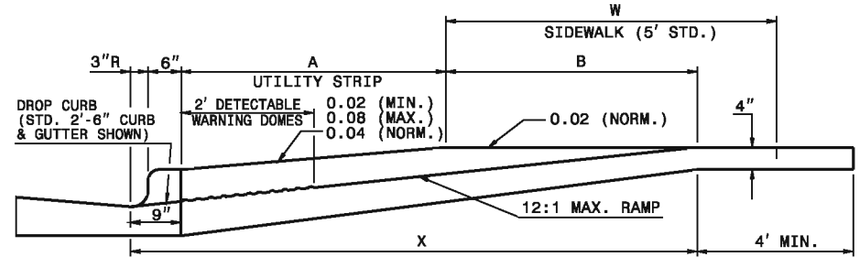

SECTION B-B

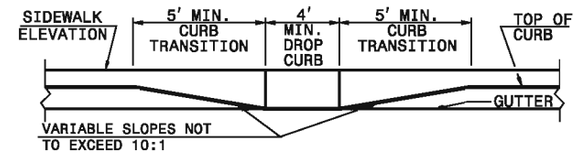

SECTION A-A

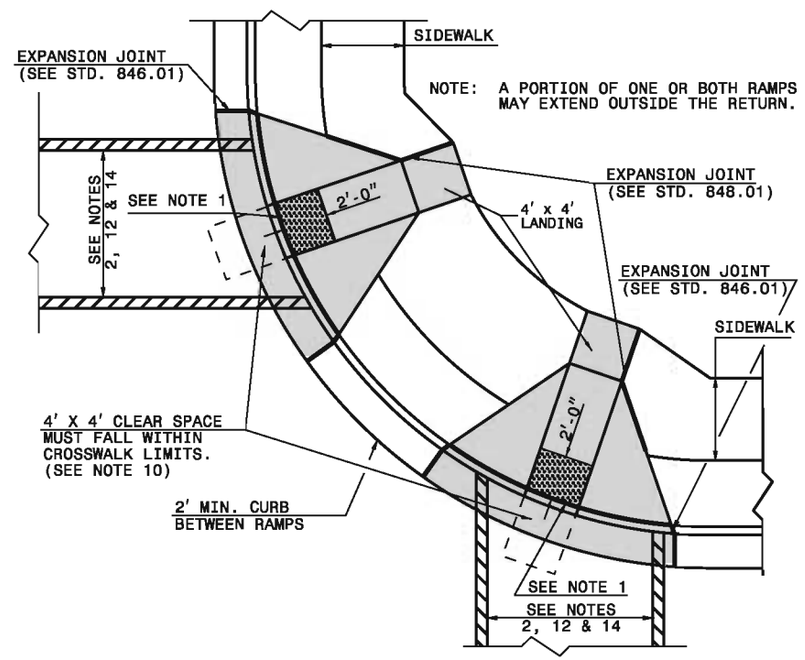

PLAN VIEW

DUAL RAMPS
ANY RADII
(4' MIN. FLOOR WIDTH)

STATE OF NORTH CAROLINA
DEPT. OF TRANSPORTATION
DIVISION OF HIGHWAYS
RALEIGH, N.C.

1-12

ENGLISH STANDARD DRAWING FOR

CURB RAMP

PROPOSED CURB AND GUTTER

SHEET 1 OF 3

848.05

SHEET 1 OF 3

848.05

STATE OF
NORTH CAROLINA
DEPT. OF TRANSPORTATION
DIVISION OF HIGHWAYS
RALEIGH, N.C.

1-12

ENGLISH STANDARD DRAWING FOR

CURB RAMP

PROPOSED CURB AND GUTTER

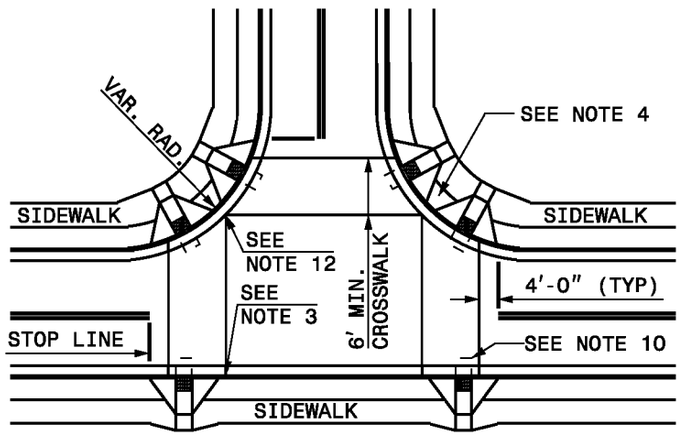

DETAIL SHOWING TYPICAL LOCATION OF CURB RAMPS, PEDESTRIAN CROSSWALKS AND STOP LINES FOR TEE INTERSECTIONS

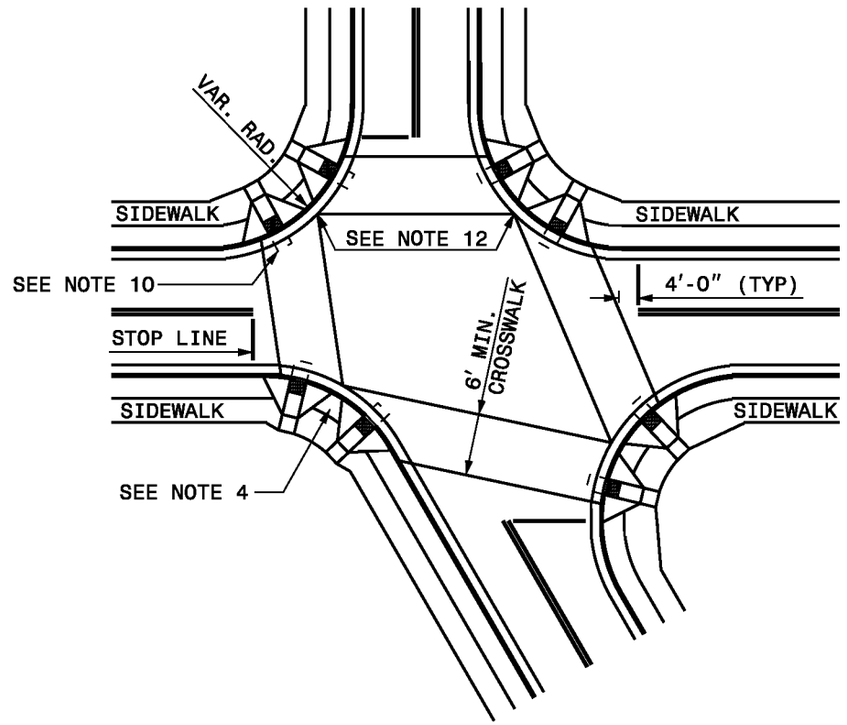

DETAIL SHOWING TYPICAL LOCATION OF CURB RAMPS, PEDESTRIAN CROSSWALKS AND STOP LINES

ROADWAY
PLAN SYMBOL
CR
FOR PROPOSED
CURB RAMP

PROPOSED CURB RAMP W/ LANDING

PROPOSED OR FUTURE SIDEWALK

ALLOWABLE LOCATIONS

DUAL RAMP RADII.....ANY

SHEET 2 OF 3

848.05

STATE OF
NORTH CAROLINA
DEPT. OF TRANSPORTATION
DIVISION OF HIGHWAYS
RALEIGH, N.C.

1-12

ENGLISH STANDARD DRAWING FOR

CURB RAMP

PROPOSED CURB AND GUTTER

SHEET 2 OF 3

848.05

STATE OF
NORTH CAROLINA
DEPT. OF TRANSPORTATION
DIVISION OF HIGHWAYS
RALEIGH, N.C.

1-12

ENGLISH STANDARD DRAWING FOR

CURB RAMPS

NOTES

NOTES:

1. CONSTRUCT THE RAMP SURFACE TO BE STABLE, FIRM, AND SLIP RESISTANT. CONSTRUCT THE CURB RAMP TYPE AS SHOWN IN THE PAVEMENT MARKING PLANS OR AS DIRECTED BY THE ENGINEER.
2. LOCATE CURB RAMPS AND PLACE PEDESTRIAN CROSSWALK MARKINGS AS SHOWN IN THE PAVEMENT MARKING PLANS. WHEN FIELD ADJUSTMENTS REQUIRE MOVING CURB RAMPS OR MARKINGS AS SHOWN, CONTACT THE SIGNING AND DELINEATION UNIT OR LOCATE AS DIRECTED BY THE ENGINEER.
3. COORDINATE THE CURB RAMP AND THE PEDESTRIAN CROSSWALK MARKINGS SO A 4′x4′ CLEAR SPACE AT THE BASE OF THE CURB RAMP WILL FALL WITHIN THE PEDESTRIAN CROSSWALK LINES.
4. SET BACK DISTANCE FROM INSIDE CROSSWALK MARKING TO NEAREST EDGE OF TRAVEL LANE IS 4′ MINIMUM.
5. REFER TO THE PAVEMENT MARKING PLANS FOR STOP BAR LOCATIONS AT SIGNALIZED INTERSECTIONS. IF A PAVEMENT MARKING PLAN IS NOT PROVIDED, CONTACT THE SIGNAL DESIGN SECTION FOR THE STOP BAR LOCATIONS OR LOCATE AS DIRECTED BY THE ENGINEER.
6. TERMINATE PARKING A MINIMUM OF 20′ BACK OF A PEDESTRIAN CROSSWALK.
7. CONSTRUCT CURB RAMPS A MINIMUM OF 4′ WIDE.
8. CONSTRUCT THE RUNNING SLOPE OF THE RAMP 8.33% MAXIMUM.
9. ALLOWABLE CROSS SLOPE ON SIDEWALKS AND CURB RAMPS WILL BE 2% MAXIMUM.
10. CONSTRUCT THE SIDE FLARE SLOPE A MAXIMUM OF 10% MEASURED ALONG THE CURB LINE.
11. CONSTRUCT THE COUNTER SLOPE OF THE GUTTER OR STREET AT THE BASE OF THE CURB RAMP A MAXIMUM OF 5% AND MAINTAIN A SMOOTH TRANSITION.
12. CONSTRUCT LANDINGS FOR SIDEWALK A MINIMUM OF 4′x4′ WITH A MAXIMUM SLOPE OF 2% IN ANY DIRECTION. CONSTRUCT LANDINGS FOR MEDIAN ISLANDS A MINIMUM OF 5′x5′ WITH A MAXIMUM SLOPE OF 2% IN ANY DIRECTION.
13. TO USE A MEDIAN ISLAND AS A PEDESTRIAN REFUGE AREA, MEDIAN ISLANDS WILL BE A MINIMUM OF 6′ WIDE. CONSTRUCT MEDIAN ISLANDS TO PROVIDE PASSAGE OVER OR THROUGHT THE ISLAND.
14. SMALL CHANNELIZATION ISLANDS THAT CAN NOT PROVIDE A 5′X5′ LANDING AT THE TOP OF A RAMPS, WILL BE CUT THROUGH LEVEL WITH THE SURFACE STREET.
15. CURB RAMPS WITH RETURNED CURBS MAY BE USED ONLY WHERE PEDESTRIANS WOULD NOT NORMALLY WALK ACROSS THE RAMP. THE ADJACENT SURFACE IS PLANTING OR OTHER NON-WALKING SURFACE OR THE SIDE APPROACH IS SUBSTANTIALLY OBSTRUCTED.
16. PLACE A ½″ EXPANSION JOINT WHERE THE CONCRETE CURB RAMP JOINS THE CURB AS SHOWN IN ROADWAY STANDARD DRAWING 848.01
17. PLACE ALL PEDESTRIAN PUSH BUTTON ACTUATORS AND CROSSING SIGNALS AS SHOWN IN THE PLANS OR AS SHOWN IN THE MUTCD.
18. CURB RAMPS THROUGH MEDIAN ISLANDS, SINGLE RAMPS AT DUAL CROSSWALKS OR LIMITED R/W SITUATIONS, WILL BE HANDLED BY SPECIAL DETAILS. CONTACT THE CONTRACT STANDARDS AND DEVELOPMENT UNIT FOR THE DETAILS OR FOR A SPECIAL DESIGN.

STATE OF
NORTH CAROLINA
DEPT. OF TRANSPORTATION
DIVISION OF HIGHWAYS
RALEIGH, N.C.

1-12

ENGLISH STANDARD DRAWING FOR

CURB RAMPS

NOTES

SHEET 3 OF 3
848.05

STATE OF NORTH CAROLINA
DEPT. OF TRANSPORTATION
DIVISION OF HIGHWAYS
RALEIGH, N.C.

1-12

ENGLISH STANDARD DRAWING FOR

CURB RAMP

EXISTING CURB AND GUTTER

CURB RAMP AND EXISTING SIDEWALK WITH GRASS STRIP

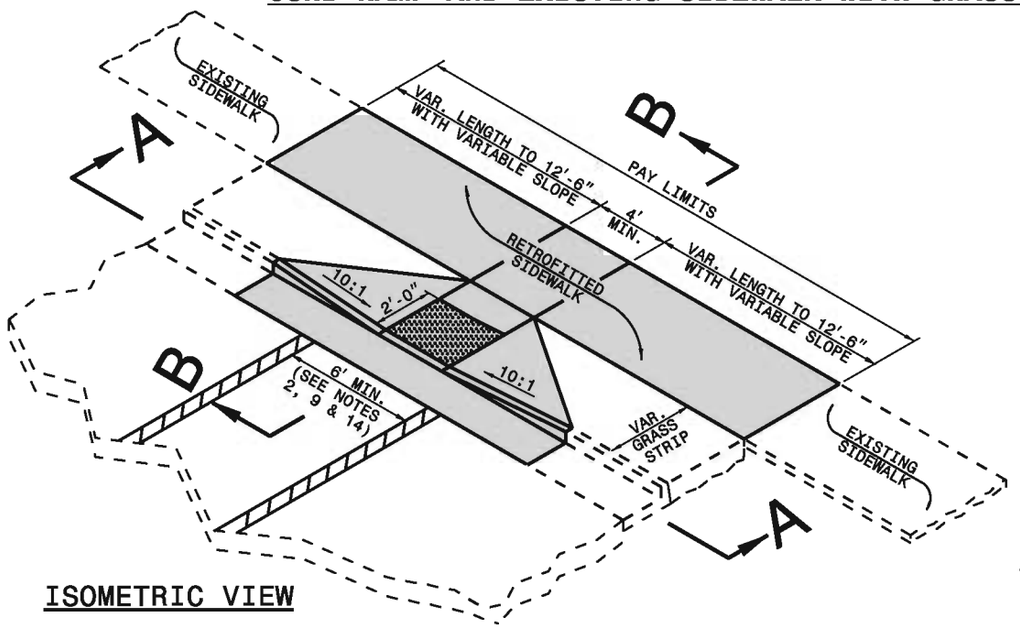

ISOMETRIC VIEW

PAY LIMITS OF CURB RAMP

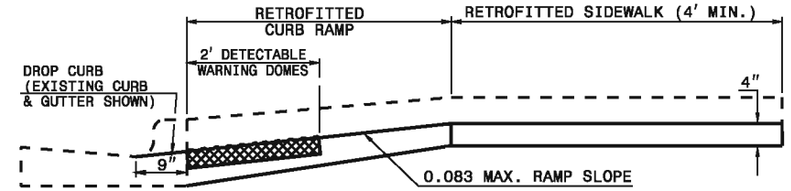

SECTION B-B

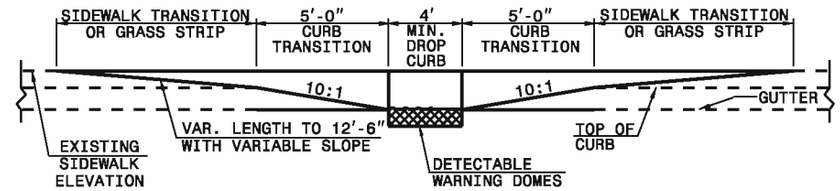

SECTION A-A

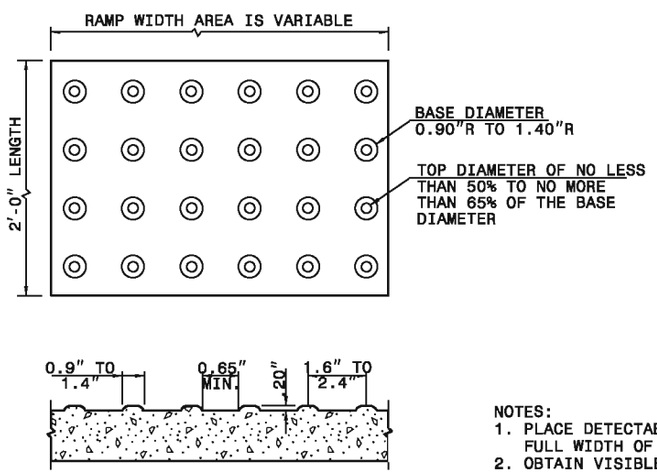

DETECTABLE WARNING DOMES

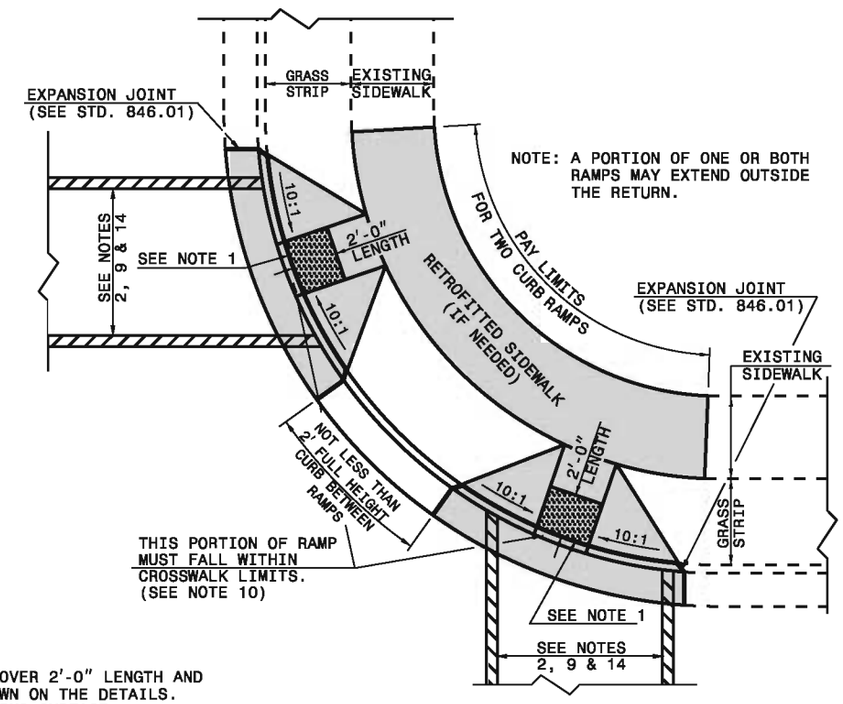

PLAN VIEW

DUAL RAMPS
ANY RADII
(40" MIN. FLOOR WIDTH)

NOTES:
1. PLACE DETECTABLE WARNING DOMES TO COVER 2'-0" LENGTH AND FULL WIDTH OF THE RAMP FLOOR AS SHOWN ON THE DETAILS.
2. OBTAIN VISIBLE CONTRAST WITH ADJOINING SURFACE, EITHER LIGHT-ON-DARK, OR DARK-ON-LIGHT SEQUENCE COVERING THE ENTIRE RAMP.

SHEET 1 OF 5

848.06

STATE OF NORTH CAROLINA
DEPT. OF TRANSPORTATION
DIVISION OF HIGHWAYS
RALEIGH, N.C.

1-12

ENGLISH STANDARD DRAWING FOR

CURB RAMP

EXISTING CURB AND GUTTER

SHEET 1 OF 5

848.06

STATE OF NORTH CAROLINA
DEPT. OF TRANSPORTATION
DIVISION OF HIGHWAYS
RALEIGH, N.C.

1-12

ENGLISH STANDARD DRAWING FOR

CURB RAMP

EXISTING CURB AND GUTTER

SHEET 2 OF 5

848.06

CURB RAMPS AND EXISTING SIDEWALK ADJACENT TO CURB

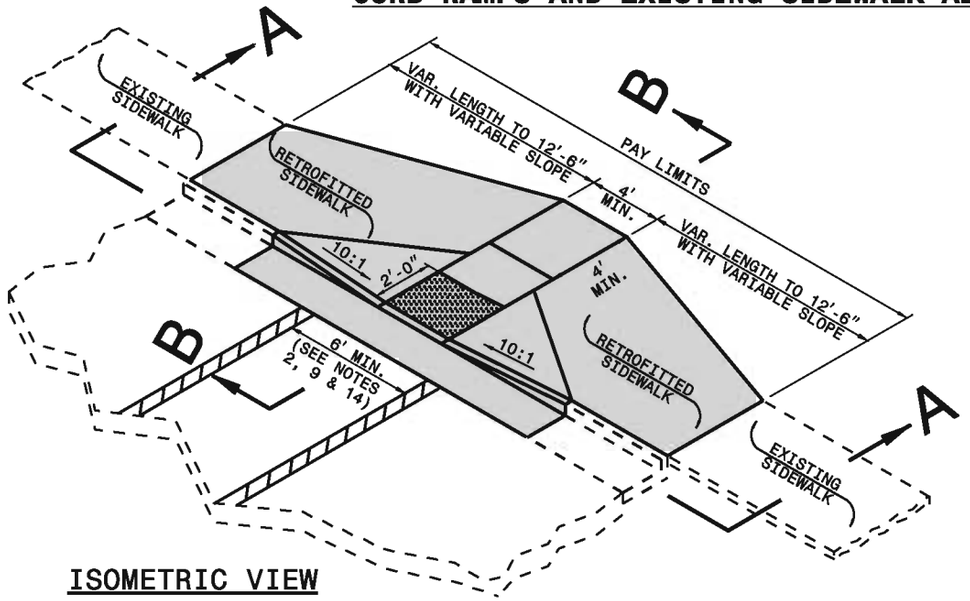

ISOMETRIC VIEW

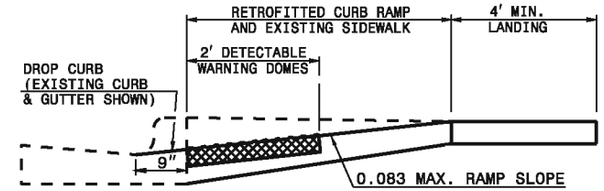

SECTION B-B

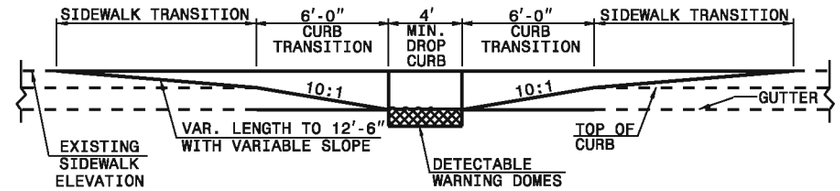

SECTION A-A

PAY LIMITS OF CURB RAMP

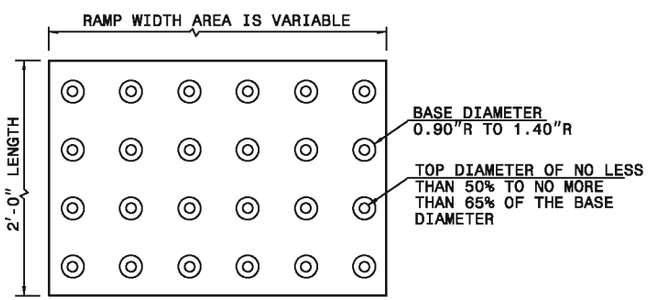

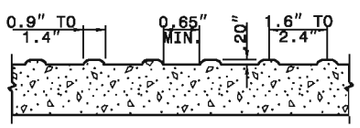

DETECTABLE WARNING DOMES

NOTES:
1. PLACE DETECTABLE WARNING DOMES TO COVER 2'-0" LENGTH AND FULL WIDTH OF THE RAMP FLOOR AS SHOWN ON THE DETAILS.
2. OBTAIN VISIBLE CONTRAST WITH ADJOINING SURFACE, EITHER LIGHT-ON-DARK, OR DARK-ON-LIGHT SEQUENCE COVERING THE ENTIRE RAMP.

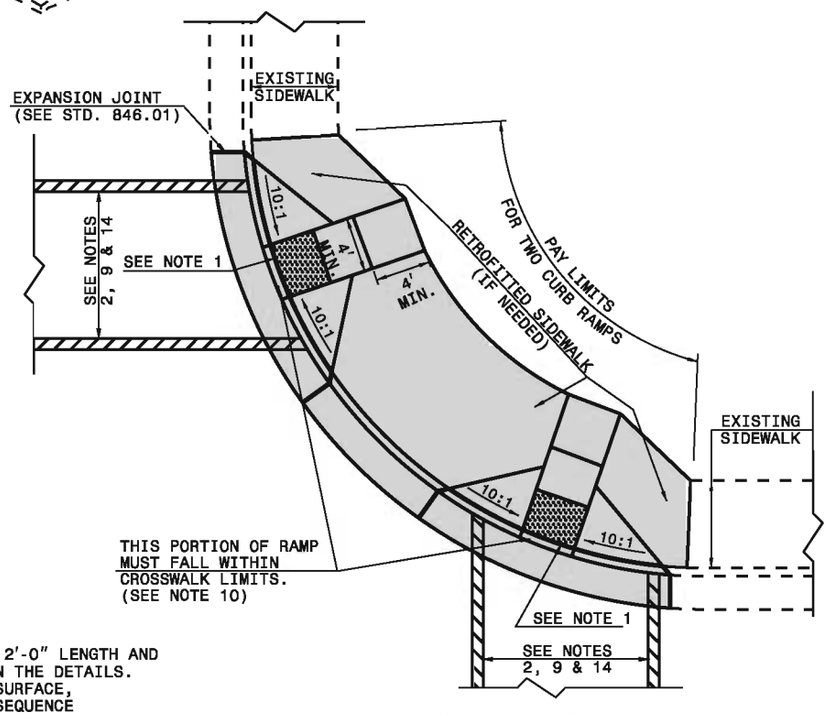

PLAN VIEW

DUAL RAMPS
ANY RADII
(40" MIN. FLOOR WIDTH)

STATE OF NORTH CAROLINA
DEPT. OF TRANSPORTATION
DIVISION OF HIGHWAYS
RALEIGH, N.C.

1-12

ENGLISH STANDARD DRAWING FOR

CURB RAMP

EXISTING CURB AND GUTTER

SHEET 2 OF 5

848.06

STATE OF
NORTH CAROLINA
DEPT. OF TRANSPORTATION
DIVISION OF HIGHWAYS
RALEIGH, N.C.

1-12

ENGLISH STANDARD DRAWING FOR

CURB RAMP

EXISTING CURB AND GUTTER

SHEET 3 OF 5

848.06

RETROFITTING DETECTABLE WARNING DOMES ONTO EXISTING CURB RAMP

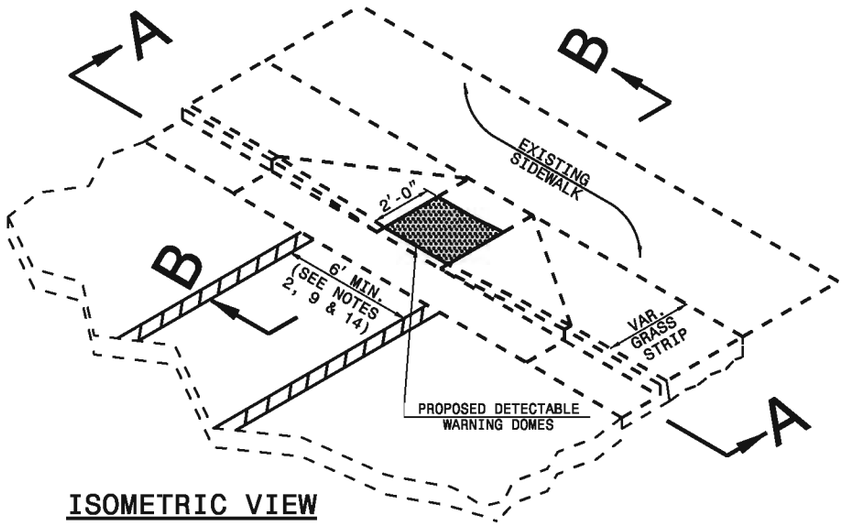

ISOMETRIC VIEW

PAY LIMITS OF RETROFIT CURB RAMP

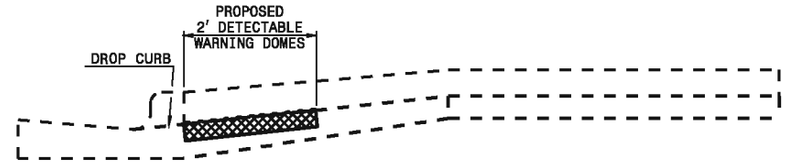

SECTION B-B

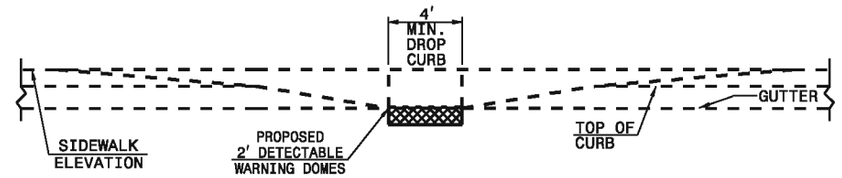

SECTION A-A

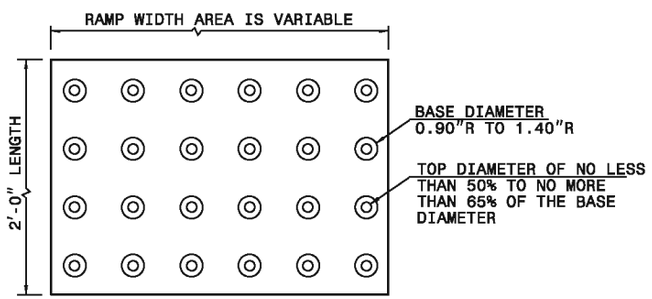

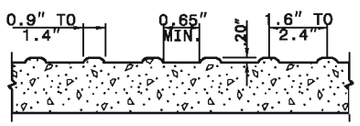

NOTES:
1. PLACE DETECTABLE WARNING DOMES TO COVER 2'-0" LENGTH AND FULL WIDTH OF THE RAMP FLOOR AS SHOWN ON THE DETAILS.
2. OBTAIN VISIBLE CONTRAST WITH ADJOINING SURFACE, EITHER LIGHT-ON-DARK, OR DARK-ON-LIGHT SEQUENCE COVERING THE ENTIRE RAMP.

DETECTABLE WARNING DOMES

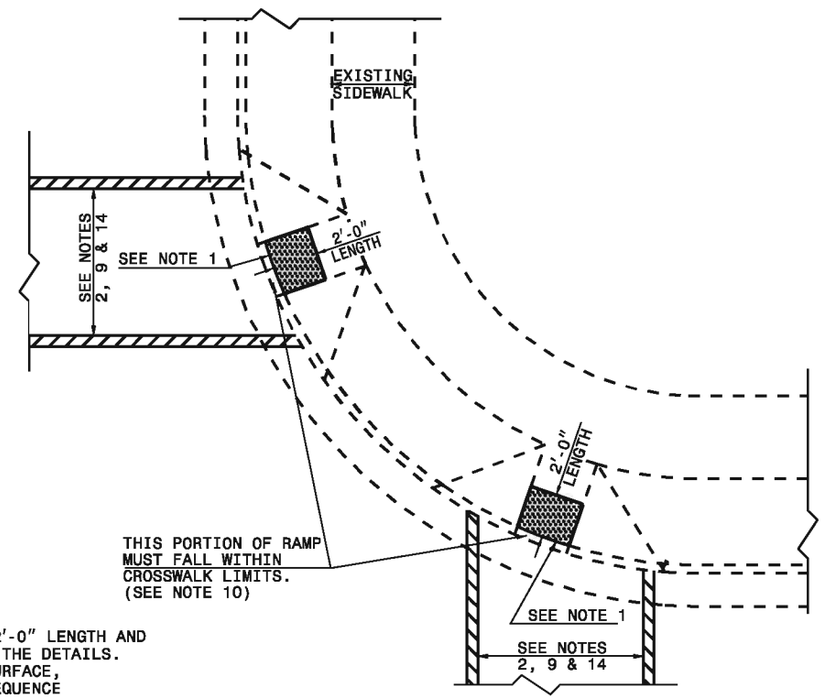

PLAN VIEW

DUAL RAMPS
ANY RADII
(40" MIN. FLOOR WIDTH)

STATE OF
NORTH CAROLINA
DEPT. OF TRANSPORTATION
DIVISION OF HIGHWAYS
RALEIGH, N.C.

1-12

ENGLISH STANDARD DRAWING FOR

CURB RAMP

EXISTING CURB AND GUTTER

SHEET 3 OF 5

848.06

STATE OF
NORTH CAROLINA
DEPT. OF TRANSPORTATION
DIVISION OF HIGHWAYS
RALEIGH, N.C.

1-12

ENGLISH STANDARD DRAWING FOR

CURB RAMP

EXISTING CURB AND GUTTER

SHEET 4 OF 5

848.06

CURB RAMPS AND EXISTING SIDEWALK

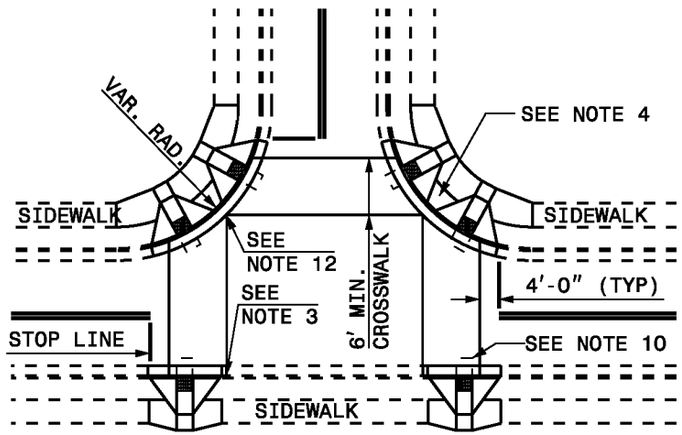

DETAIL SHOWING TYPICAL LOCATION OF CURB RAMPS, PEDESTRIAN CROSSWALKS AND STOP LINES FOR TEE INTERSECTIONS

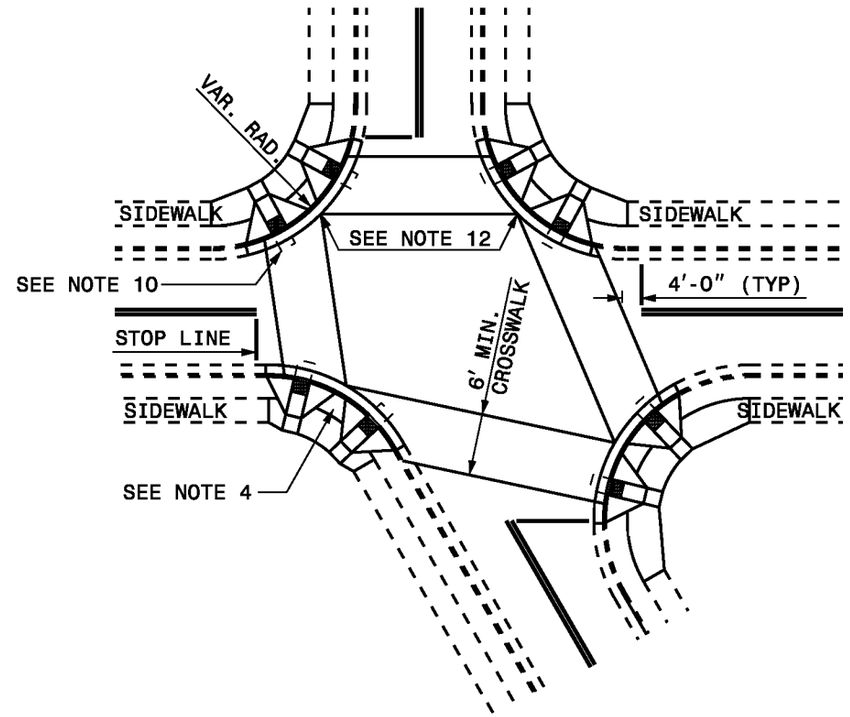

DETAIL SHOWING TYPICAL LOCATION OF CURB RAMPS, PEDESTRIAN CROSSWALKS AND STOP LINES

RESURFACING PROJECTS

PROPOSED CURB RAMP W/ LANDING FOR RESURFACING PROJECTS

EXISTING SIDEWALK

ALLOWABLE LOCATIONS

DUAL RAMP RADII.....ANY

STATE OF
NORTH CAROLINA
DEPT. OF TRANSPORTATION
DIVISION OF HIGHWAYS
RALEIGH, N.C.

1-12

ENGLISH STANDARD DRAWING FOR

CURB RAMP

EXISTING CURB AND GUTTER

SHEET 4 OF 5

848.06

STATE OF NORTH CAROLINA
DEPT. OF TRANSPORTATION
DIVISION OF HIGHWAYS
RALEIGH, N.C.

1-12

ENGLISH STANDARD DRAWING FOR

CURB RAMP

EXISTING CURB AND GUTTER

SHEET 5 OF 5

848.06

CURB RAMP AND EXISTING SIDEWALK

NOTES:

1. CONSTRUCT THE RAMP SURFACE TO BE STABLE, FIRM, AND SLIP RESISTANT. CONSTRUCT THE CURB RAMP TYPE AS SHOWN IN THE PAVEMENT MARKING PLANS OR AS DIRECTED BY THE ENGINEER.
2. LOCATE CURB RAMPS AND PLACE PEDESTRIAN CROSSWALK MARKINGS AS SHOWN IN THE PAVEMENT MARKING PLANS. WHEN FIELD ADJUSTMENTS REQUIRE MOVING CURB RAMPS OR MARKINGS AS SHOWN, CONTACT THE SIGNING AND DELINEATION UNIT OR LOCATE AS DIRECTED BY THE ENGINEER.
3. COORDINATE THE CURB RAMP AND THE PEDESTRIAN CROSSWALK MARKINGS SO A 4′x4′ CLEAR SPACE AT THE BASE OF THE CURB RAMP WILL FALL WITHIN THE PEDESTRIAN CROSSWALK LINES.
4. SET BACK DISTANCE FROM INSIDE CROSSWALK MARKING TO NEAREST EDGE OF TRAVEL LANE IS 4′ MINIMUM.
5. REFER TO THE PAVEMENT MARKING PLANS FOR STOP BAR LOCATIONS AT SIGNALIZED INTERSECTIONS. IF A PAVEMENT MARKING PLAN IS NOT PROVIDED, CONTACT THE SIGNAL DESIGN SECTION FOR THE STOP BAR LOCATIONS OR LOCATE AS DIRECTED BY THE ENGINEER.
6. TERMINATE PARKING A MINIMUM OF 20′ BACK OF A PEDESTRIAN CROSSWALK.
7. CONSTRUCT CURB RAMPS A MINIMUM OF 4′ WIDE.
8. CONSTRUCT THE RUNNING SLOPE OF THE RAMP 8.33% MAXIMUM.
9. ALLOWABLE CROSS SLOPE ON SIDEWALKS AND CURB RAMPS WILL BE 2% MAXIMUM.
10. CONSTRUCT THE SIDE FLARE SLOPE A MAXIMUM OF 10% MEASURED ALONG THE CURB LINE.
11. CONSTRUCT THE COUNTER SLOPE OF THE GUTTER OR STREET AT THE BASE OF THE CURB RAMP A MAXIMUM OF 5% AND MAINTAIN A SMOOTH TRANSITION.
12. CONSTRUCT LANDINGS FOR SIDEWALK A MINIMUM OF 4′x4′ WITH A MAXIMUM SLOPE OF 2% IN ANY DIRECTION. CONSTRUCT LANDINGS FOR MEDIAN ISLANDS A MINIMUM OF 5′x5′ WITH A MAXIMUM SLOPE OF 2% IN ANY DIRECTION.
13. TO USE A MEDIAN ISLAND AS A PEDESTRIAN REFUGE AREA, MEDIAN ISLANDS WILL BE A MINIMUM OF 6′ WIDE. CONSTRUCT MEDIAN ISLANDS TO PROVIDE PASSAGE OVER OR THROUGHT THE ISLAND.
14. SMALL CHANNELIZATION ISLANDS THAT CAN NOT PROVIDE A 5′X5′ LANDING AT THE TOP OF A RAMPS, WILL BE CUT THROUGH LEVEL WITH THE SURFACE STREET.
15. CURB RAMPS WITH RETURNED CURBS MAY BE USED ONLY WHERE PEDESTRIANS WOULD NOT NORMALLY WALK ACROSS THE RAMP. THE ADJACENT SURFACE IS PLANTING OR OTHER NON-WALKING SURFACE OR THE SIDE APPROACH IS SUBSTANTIALLY OBSTRUCTED.
16. PLACE A ½″ EXPANSION JOINT WHERE THE CONCRETE CURB RAMP JOINS THE CURB AS SHOWN IN ROADWAY STANDARD DRAWING 848.01
17. PLACE ALL PEDESTRIAN PUSH BUTTON ACTUATORS AND CROSSING SIGNALS AS SHOWN IN THE PLANS OR AS SHOWN IN THE MUTCD.
18. CURB RAMPS THROUGH MEDIAN ISLANDS, SINGLE RAMPS AT DUAL CROSSWALKS OR LIMITED R/W SITUATIONS, WILL BE HANDLED BY SPECIAL DETAILS. CONTACT THE CONTRACT STANDARDS AND DEVELOPMENT UNIT FOR THE DETAILS OR FOR A SPECIAL DESIGN.

STATE OF NORTH CAROLINA
DEPT. OF TRANSPORTATION
DIVISION OF HIGHWAYS
RALEIGH, N.C.

1-12

ENGLISH STANDARD DRAWING FOR

CURB RAMP

EXISTING CURB AND GUTTER

SHEET 5 OF 5

848.06

STATE OF NORTH CAROLINA
DEPT. OF TRANSPORTATION
DIVISION OF HIGHWAYS
RALEIGH, N.C.

1-12

ENGLISH STANDARD DRAWING FOR

CONCRETE PAVED DITCHES

GENERAL NOTES:

IN THE 4″ CONC. PAVED DITCHES, PLACE ½″ EXPANSION JOINTS AT 30′ INTERVALS AND AT ALL OTHER POINTS WHERE PROPOSED DITCHES ABUT RIGID OBJECTS. PLACED GROOVED JOINTS 1″ DEEP AT 10′ INTERVALS BETWEEN EXPANSION JOINTS.

CONSTRUCT WIDTH AND SHAPE OF PROPOSED 4″ CONCRETE PAVED DITCHES AS SHOWN OR AS DIRECTED BY THE ENGINEER.

FOR DITCH GRADES ABOVE 2% EROSION CONTROL, INSTALL MATTING ON BOTH SIDES OF THE PAVING FOR A MINIMUM WIDTH OF 36″ OR AS DIRECTED BY THE ENGINEER.

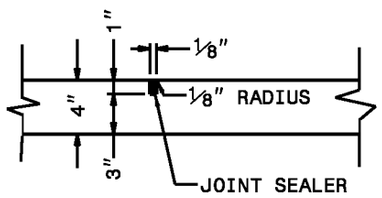

SHOWING GROOVED JOINT

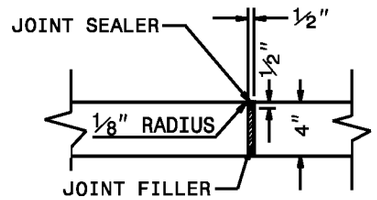

SHOWING EXPANSION JOINT

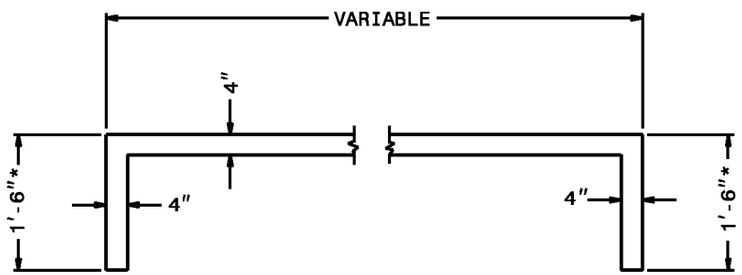

PART LONGITUDINAL SECTION OF PAVED DITCH

SHOWING 1′-6″ CURTAIN WALL REQUIRED AT EACH END

* WHEN CURTAIN WALL FOR PAVED DITCH IS LOCATED ADJACENT TO A DRAINAGE STRUCTURE AND THE PIPE FROM THE STRUCTURE INTERFERES WITH THE 1′-6″ DEPTH, THE DEPTH OF THE CURTAIN WALL MAY BE REDUCED BELOW 1′-6″ TO CLEAR THE TOP OF THE PIPE.

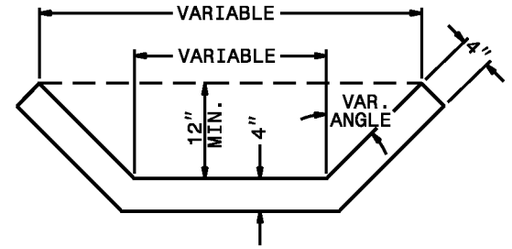

BASE DITCH OR BERM DRAINAGE OUTLET DITCH

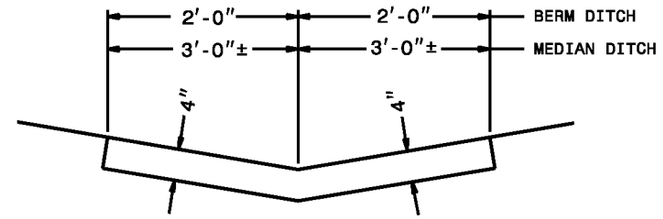

MEDIAN OR BERM DITCH

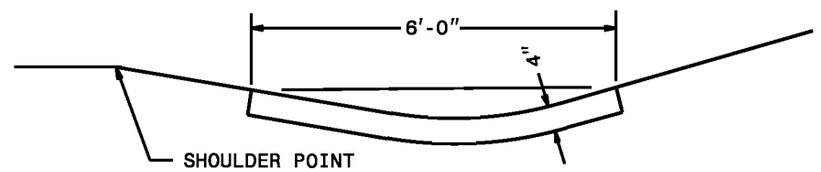

SIDE DITCH

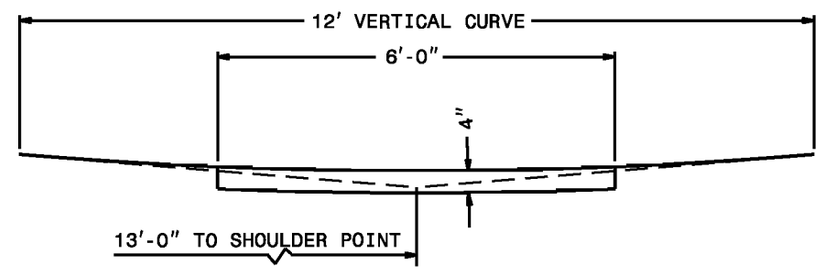

12′ V.C. ROADWAY DITCH

STATE OF NORTH CAROLINA
DEPT. OF TRANSPORTATION
DIVISION OF HIGHWAYS
RALEIGH, N.C.

1-12

ENGLISH STANDARD DRAWING FOR

CONCRETE PAVED DITCHES

SHEET 1 OF 1

850.01

SHEET 1 OF 1

850.01

STATE OF
NORTH CAROLINA
DEPT. OF TRANSPORTATION
DIVISION OF HIGHWAYS
RALEIGH, N.C.

1-12

ENGLISH STANDARD DRAWING FOR

GUIDE FOR BERM DRAINAGE OUTLET

15″ AND 18″ PIPE

SHEET 1 OF 1

850.10

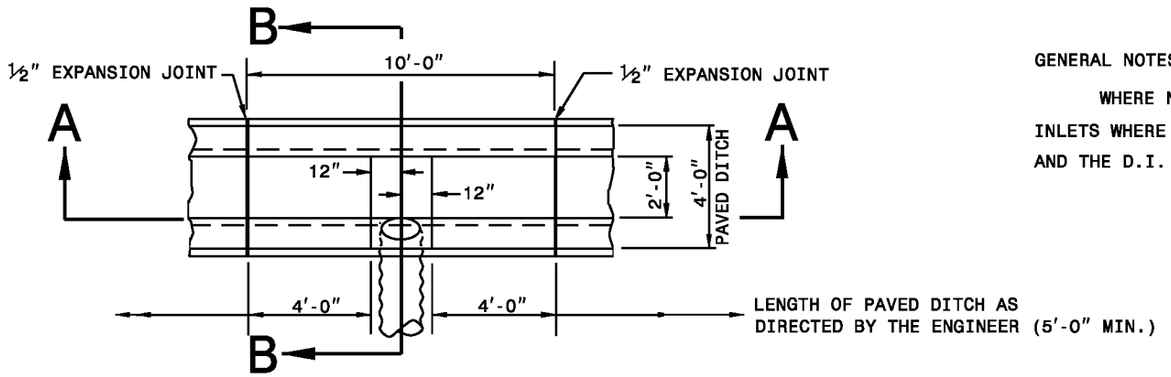

PLAN

GENERAL NOTES:

WHERE NECESSARY, ELBOWS MAY BE USED TO SKEW PIPE TO FIT INLETS WHERE THERE IS OFFSET BETWEEN THE INLET END AT BERM AND THE D.I.

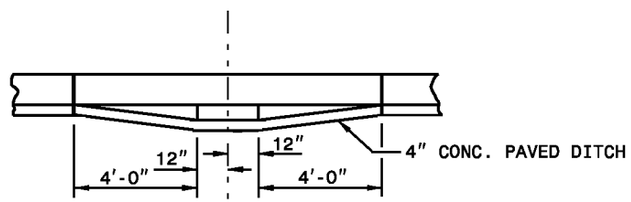

SECTION A-A

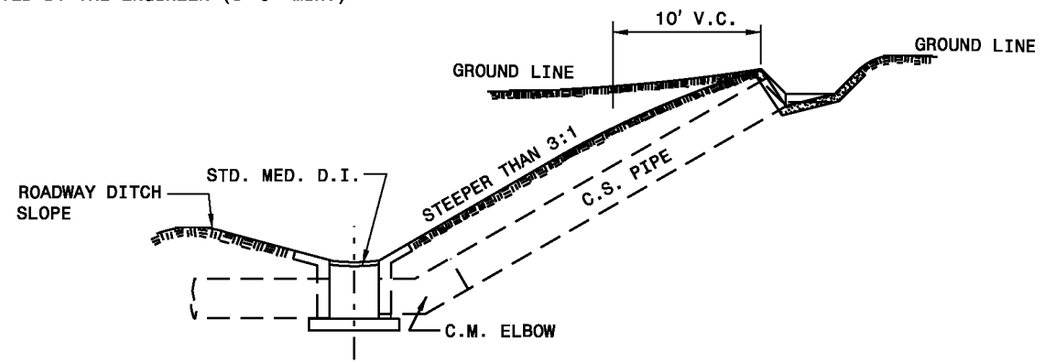

ELEVATION FOR SLOPE GREATER THAN 3:1

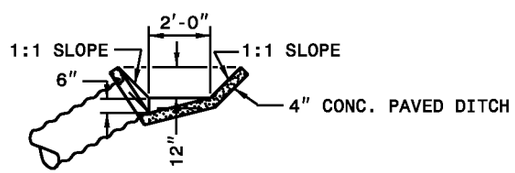

SECTION B-B

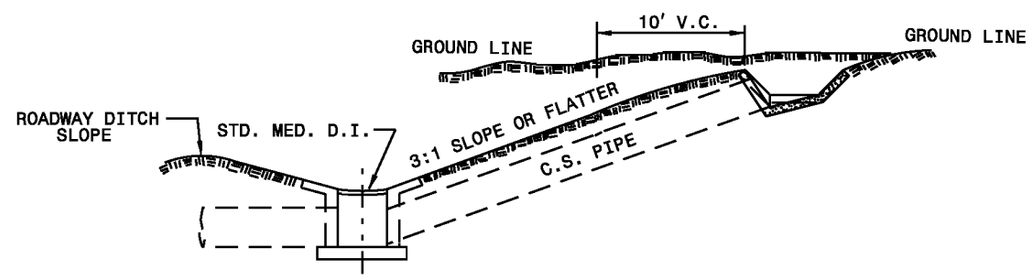

ELEVATION FOR SLOPE 3:1 OR LESS

STATE OF
NORTH CAROLINA
DEPT. OF TRANSPORTATION
DIVISION OF HIGHWAYS
RALEIGH, N.C.

1-12

ENGLISH STANDARD DRAWING FOR

GUIDE FOR BERM DRAINAGE OUTLET

15″ AND 18″ PIPE

SHEET 1 OF 1

850.10

STATE OF
NORTH CAROLINA
DEPT. OF TRANSPORTATION
DIVISION OF HIGHWAYS
RALEIGH, N.C.

1-12

ENGLISH STANDARD DRAWING FOR

GUIDE FOR BERM DRAINAGE OUTLET

24" AND 30" PIPE

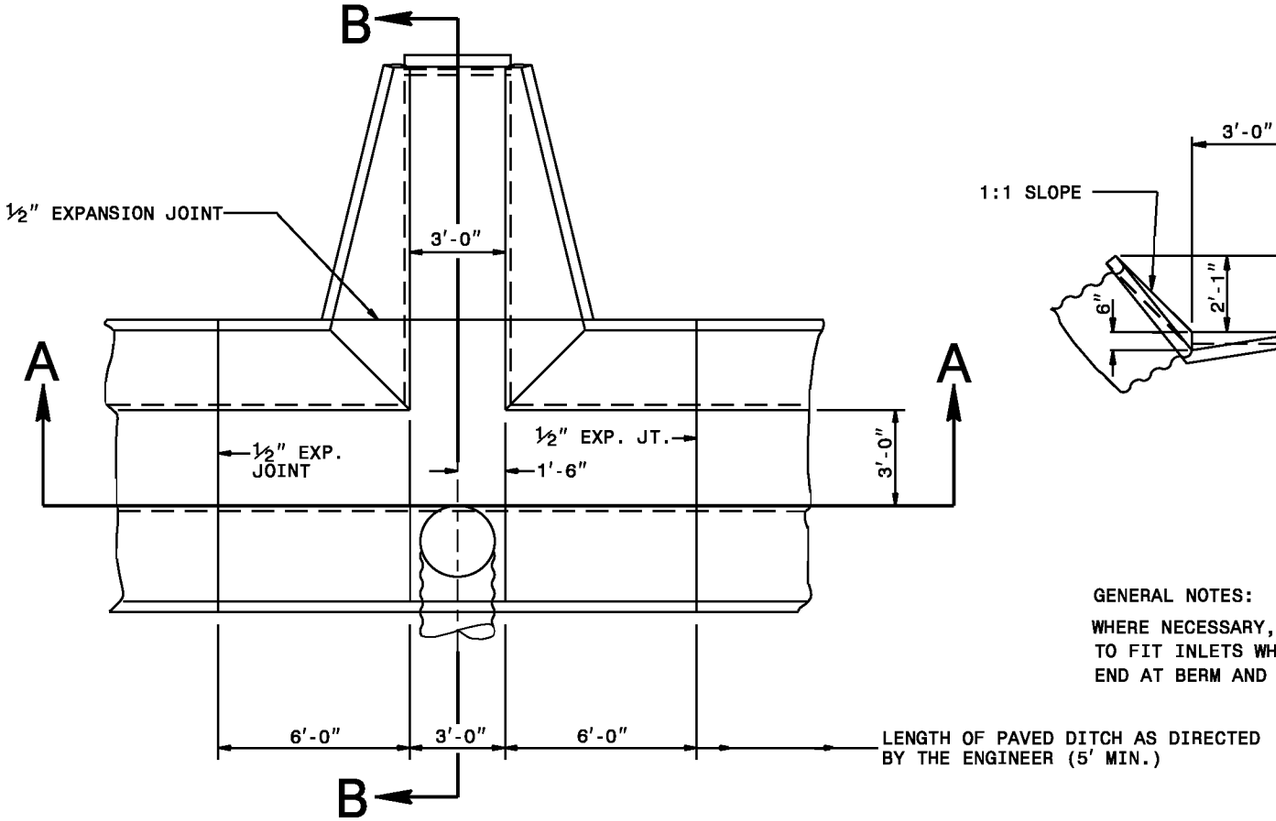

PLAN

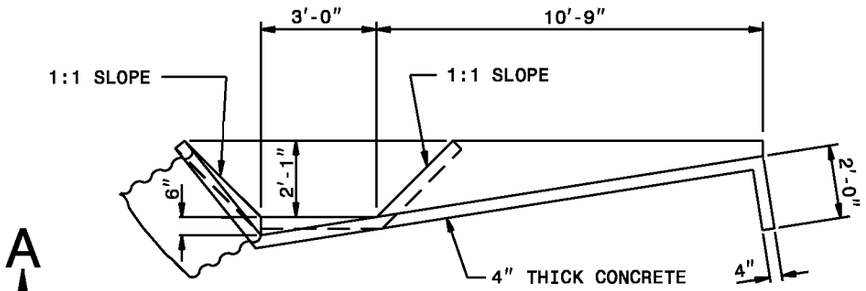

SECTION B-B

GENERAL NOTES:

WHERE NECESSARY, ELBOWS MAY BE USED TO SKEW PIPE TO FIT INLETS WHERE THERE IS OFFSET BETWEEN THE INLET END AT BERM AND THE D.I.

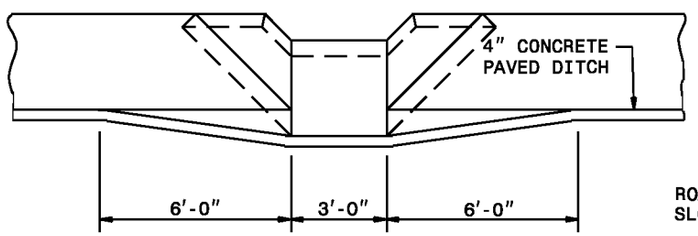

SECTION A-A

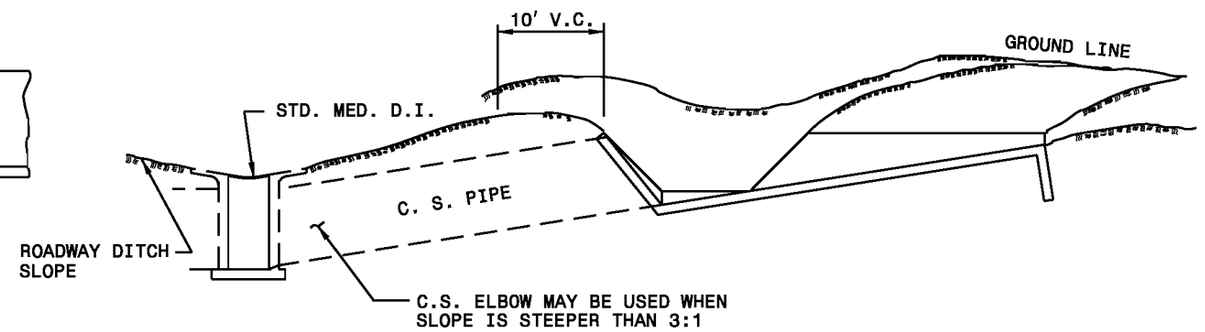

ELEVATION

SHEET 1 OF 1

850.11

STATE OF
NORTH CAROLINA
DEPT. OF TRANSPORTATION
DIVISION OF HIGHWAYS
RALEIGH, N.C.

1-12

ENGLISH STANDARD DRAWING FOR

GUIDE FOR BERM DRAINAGE OUTLET

24" AND 30" PIPE

SHEET 1 OF 1

850.11

STATE OF NORTH CAROLINA
DEPT. OF TRANSPORTATION
DIVISION OF HIGHWAYS
RALEIGH, N.C.

1-12

ENGLISH STANDARD DRAWING FOR

CONCRETE ISLANDS

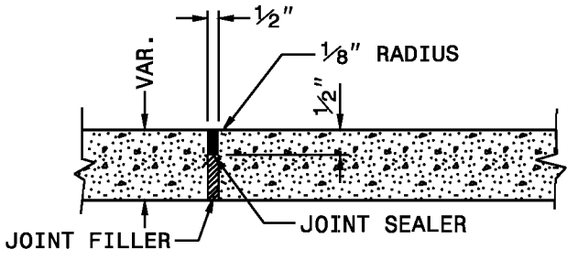

SHOWING EXPANSION JOINT

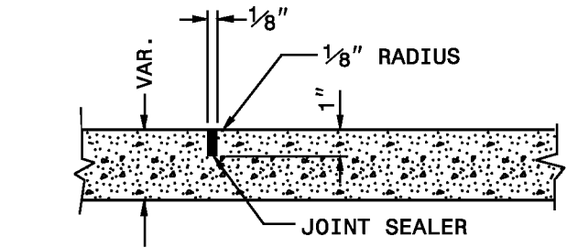

SHOWING GROOVED JOINT

PARTIAL LONGITUDINAL SECTIONS OF PAVED ISLANDS

NOTE:

WHEN MONOLITHIC CONCRETE ISLAND IS ON TOP OF SURFACE COURSE, DRIVE 40d SPIKES INTO SURFACE UNDER MONOLITHIC CONCRETE ISLAND. STAGGER SPIKES ON 2′ CENTERS EACH WAY.

IN THE CONCRETE PAVEMENT (ISLAND) AND CONCRETE ISLAND (MONOLITHIC) PLACE ½" EXPANSION JOINTS AT 30′ INTERVALS AND GROOVED JOINTS 1" DEEP AT 10′ INTERVALS BETWEEN EXPANSION JOINTS.

LINE UP THE JOINTS IN THE CONCRETE PAVEMENT (ISLAND) WITH THE JOINTS IN THE CURB OR CURB AND GUTTER. FILL AND SEAL THE TOP ½" OF THE EXPANSION JOINTS AND THE ENTIRE DEPTH OF GROOVED JOINTS WITH JOINT SEALER.

FOR JOINTS IN THE CURB AND/OR CURB AND GUTTER, SEE STANDARD NO. 846.01

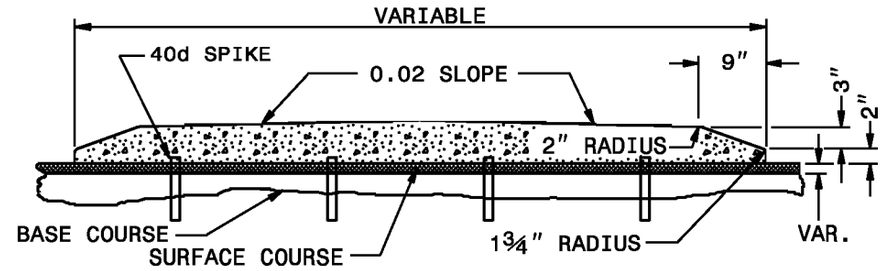

5" MONOLITHIC CONCRETE ISLAND (SURFACE MOUNTED) ON ASPHALT CONCRETE PAVEMENT

(USE ON ISLAND 4′ WIDE OR GREATER)

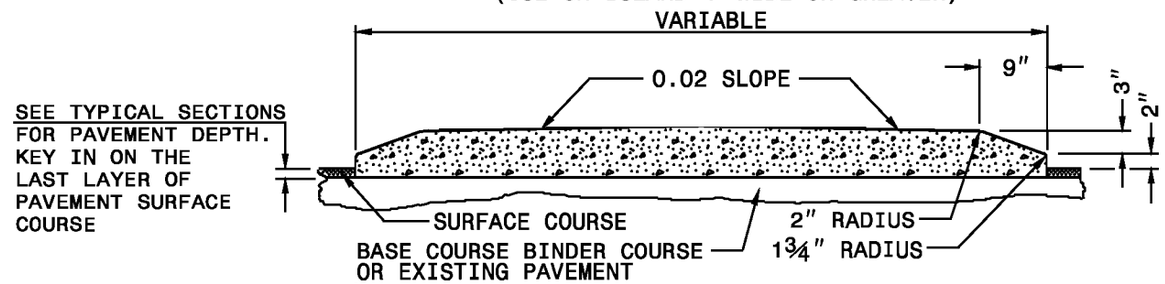

5" MONOLITHIC CONCRETE ISLAND (KEYED IN) ON ASPHALT CONCRETE PAVEMENT

(USE ON ISLAND LESS THAN 4′ WIDE)

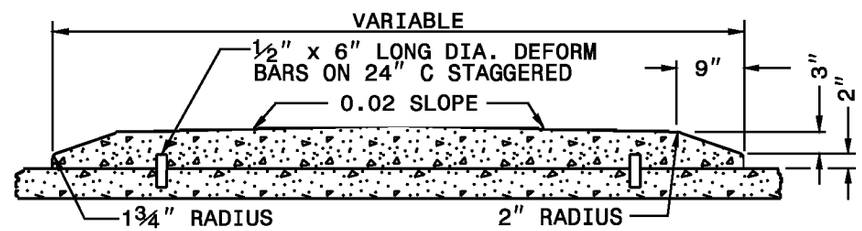

5" MONOLITHIC CONCRETE ISLAND (SURFACE MOUNTED) ON CONCRETE PAVEMENT

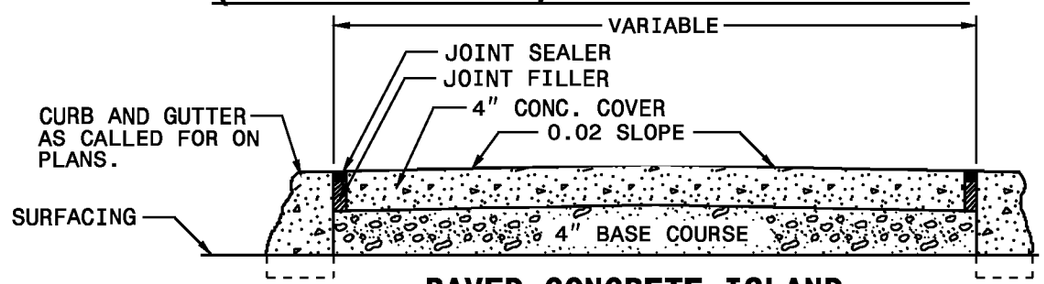

PAVED CONCRETE ISLAND

SHEET 1 OF 1

852.01

STATE OF NORTH CAROLINA
DEPT. OF TRANSPORTATION
DIVISION OF HIGHWAYS
RALEIGH, N.C.

1-12

ENGLISH STANDARD DRAWING FOR

CONCRETE ISLANDS

SHEET 1 OF 1

852.01

STATE OF
NORTH CAROLINA
DEPT. OF TRANSPORTATION
DIVISION OF HIGHWAYS
RALEIGH, N.C.

1-12

ENGLISH STANDARD DRAWING FOR
CONCRETE MOUNTABLE MEDIAN
FOR USE WITH RIGID OR FLEXIBLE PAVEMENT

SHEET 1 OF 1

852.02

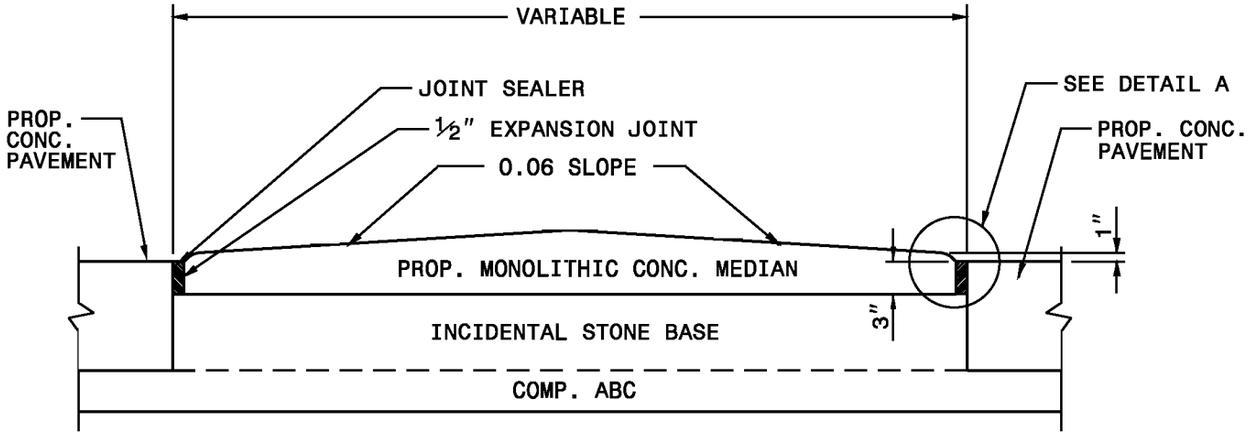

TRANSVERSE SECTION FOR CONCRETE PAVEMENT

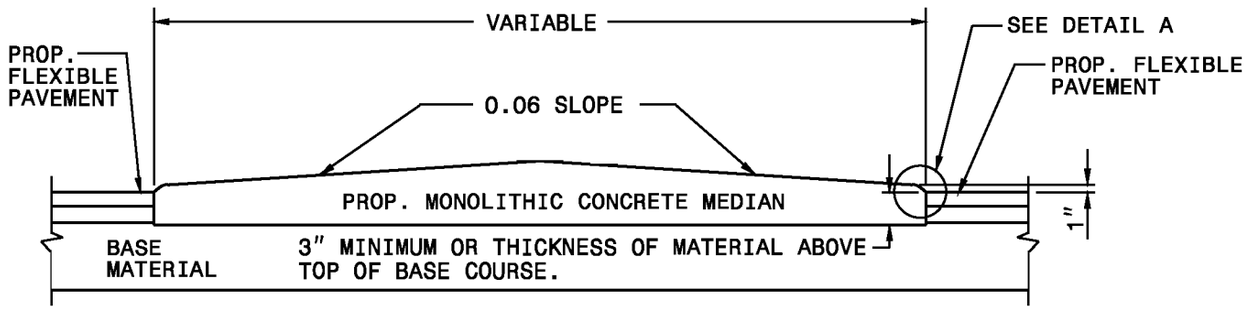

TRANSVERSE SECTION FOR FLEXIBLE PAVEMENT

GENERAL NOTES:

PLACE ½" EXPANSION JOINTS AT 30' INTERVALS AND AT ALL OTHER POINTS WHERE PROPOSED MEDIAN ABUTS RIGID OBJECTS. PLACE GROOVED JOINTS ½" DEEP AT 10' INTERVALS BETWEEN EXPANSION JOINTS. FILL THE TOP ½" OF EXPANSION JOINTS AND ½" GROOVED JOINTS WITH JOINT SEALER.

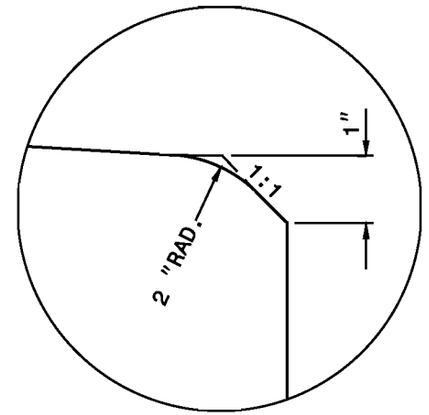

DETAIL - A

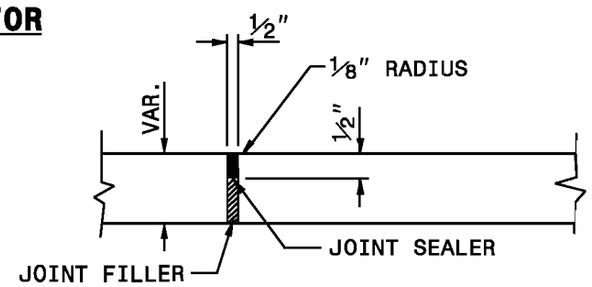

SHOWING EXPANSION JOINT

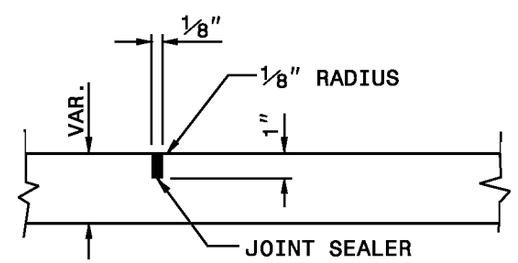

SHOWING GROOVED JOINT

PART LONGITUDINAL SECTIONS OF CONCRETE MEDIAN

STATE OF
NORTH CAROLINA
DEPT. OF TRANSPORTATION
DIVISION OF HIGHWAYS
RALEIGH, N.C.

1-12

ENGLISH STANDARD DRAWING FOR
CONCRETE MOUNTABLE MEDIAN
FOR USE WITH RIGID OR FLEXIBLE PAVEMENT

SHEET 1 OF 1

852.02

STATE OF
NORTH CAROLINA
DEPT. OF TRANSPORTATION
DIVISION OF HIGHWAYS
RALEIGH, N.C.

1-12

ENGLISH STANDARD DRAWING FOR

METHOD FOR PLACEMENT OF DROP INLETS IN GRASSED MEDIAN

(USING 1'-6" CURB & GUTTER)

SHEET 1 OF 1

852.04

NOTES:
REFER TO STD. NO. 840.14 AND 840.15 FOR DRAINAGE STRUCTURE.

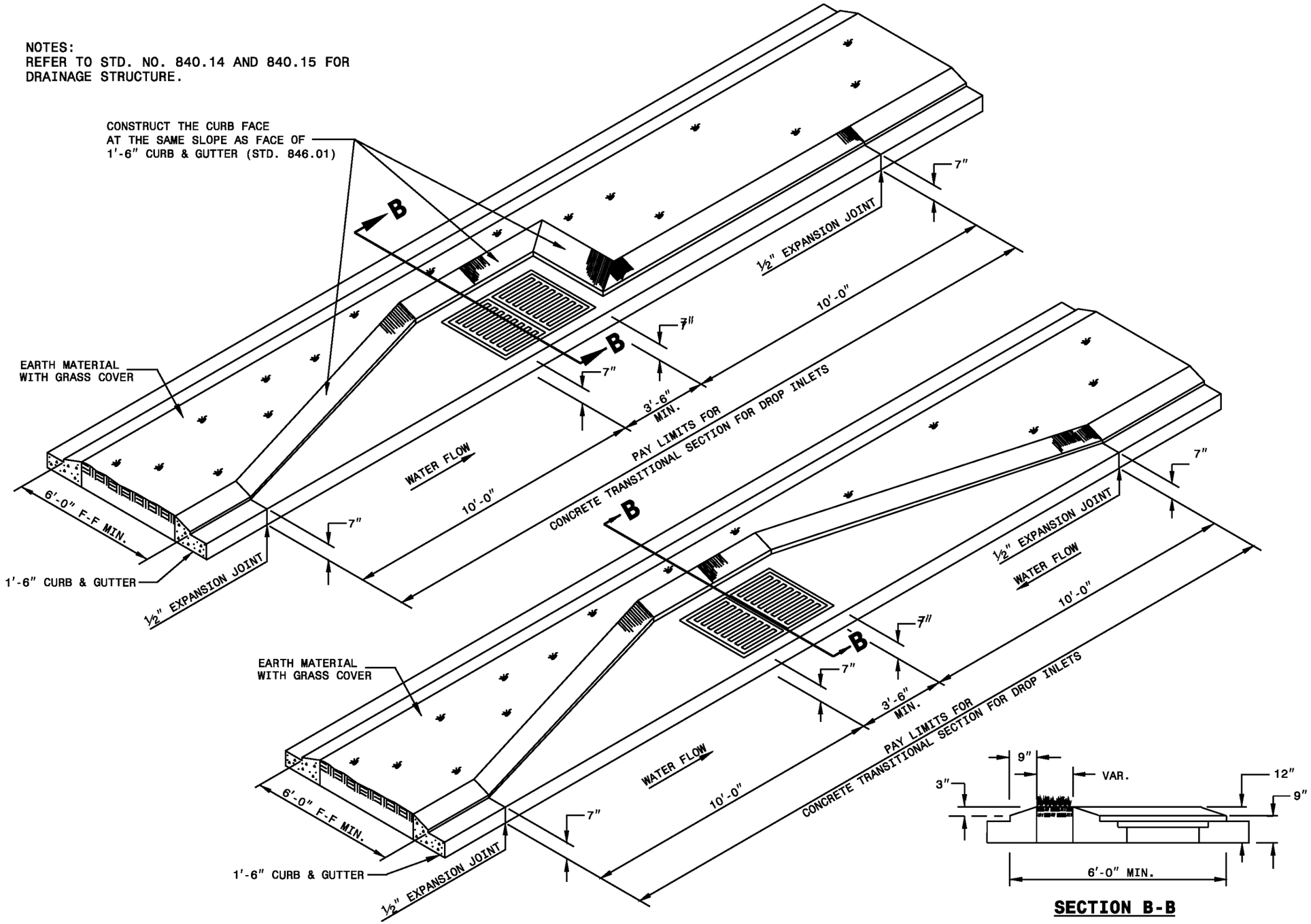

SECTION B-B

STATE OF
NORTH CAROLINA
DEPT. OF TRANSPORTATION
DIVISION OF HIGHWAYS
RALEIGH, N.C.

1-12

ENGLISH STANDARD DRAWING FOR

METHOD FOR PLACEMENT OF DROP INLETS IN GRASSED MEDIAN

(USING 1'-6" CURB & GUTTER)

SHEET 1 OF 1

852.04

STATE OF
NORTH CAROLINA
DEPT. OF TRANSPORTATION
DIVISION OF HIGHWAYS
RALEIGH, N.C.

1-12

ENGLISH STANDARD DRAWING FOR

MEDIAN CURB FOR CATCH BASIN

(FOR USE WITH 1'-6" CURB AND GUTTER)

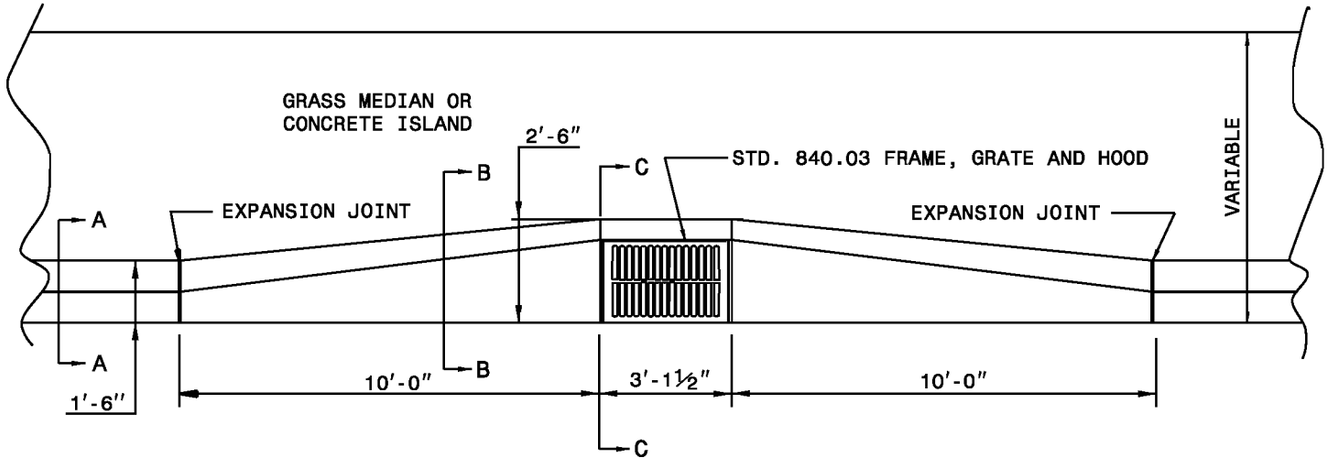

PLAN

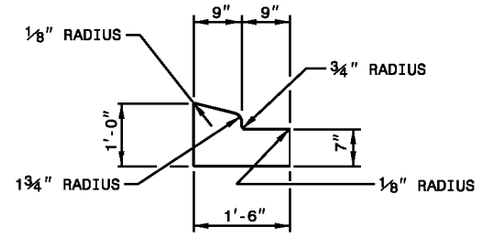

SECTION - AA

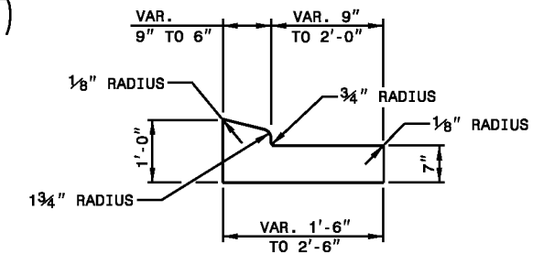

SECTION - BB

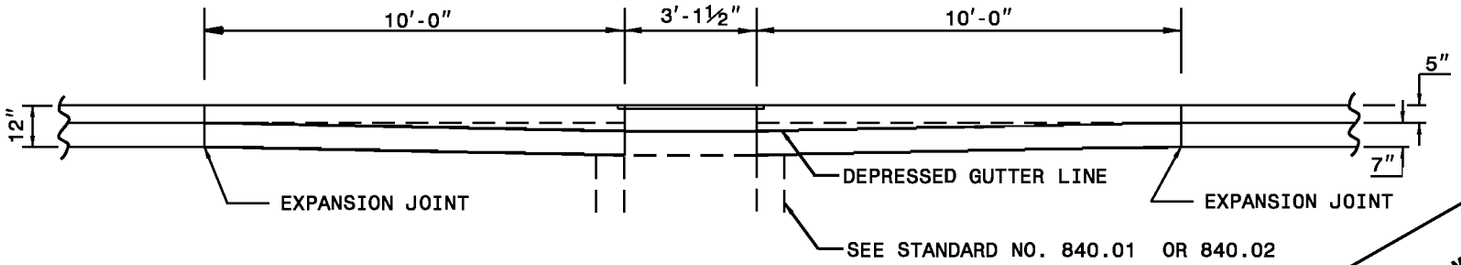

ELEVATION

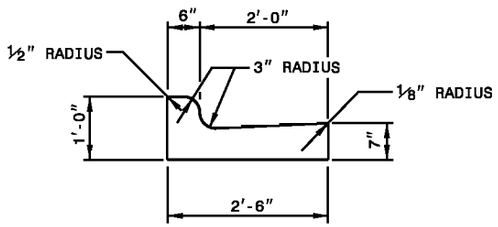

SECTION - CC

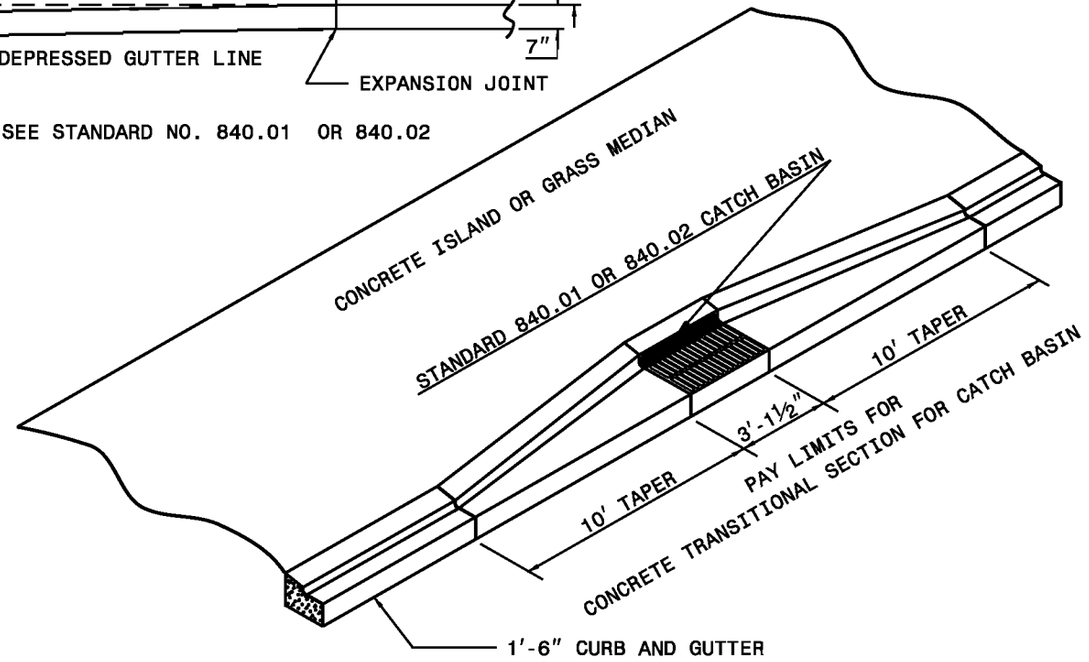

SHEET 1 OF 1

852.05

STATE OF
NORTH CAROLINA
DEPT. OF TRANSPORTATION
DIVISION OF HIGHWAYS
RALEIGH, N.C.

1-12

ENGLISH STANDARD DRAWING FOR

MEDIAN CURB FOR CATCH BASIN

(FOR USE WITH 1'-6" CURB AND GUTTER)

SHEET 1 OF 1

852.05

STATE OF
NORTH CAROLINA
DEPT. OF TRANSPORTATION
DIVISION OF HIGHWAYS
RALEIGH, N.C.

1-12

ENGLISH STANDARD DRAWING FOR

METHOD FOR PLACEMENT OF DROP INLETS IN CONCRETE ISLANDS

SHEET 1 OF 1

852.06

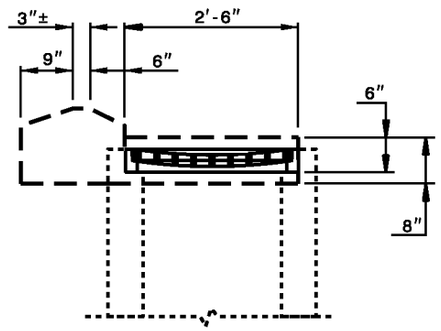

SECTION 'A-A'

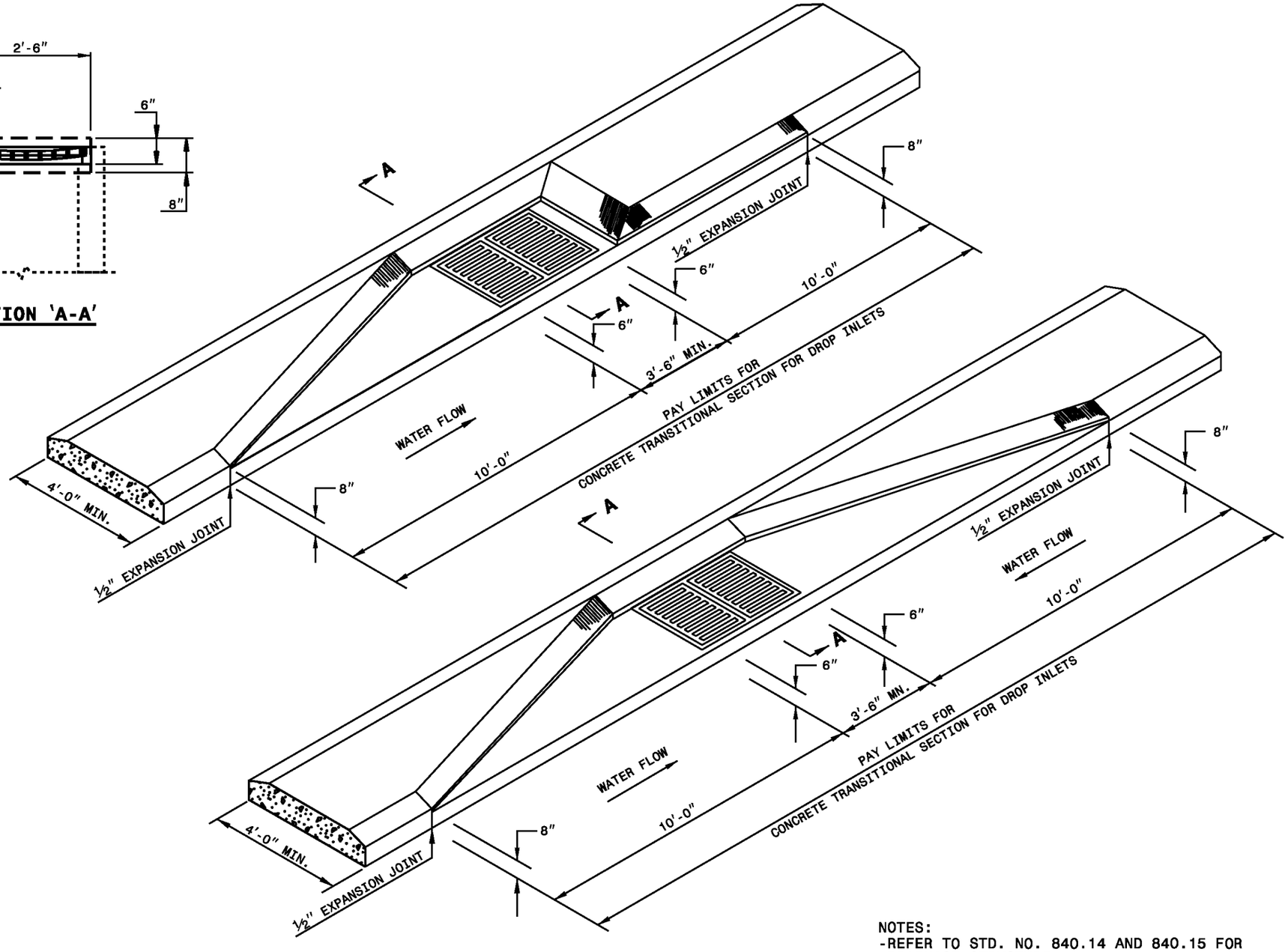

NOTES:
-REFER TO STD. NO. 840.14 AND 840.15 FOR DRAINAGE STRUCTURE.
-REFER TO STD. NO. 840.16 FOR GRATE AND FRAME.

STATE OF
NORTH CAROLINA
DEPT. OF TRANSPORTATION
DIVISION OF HIGHWAYS
RALEIGH, N.C.

1-12

ENGLISH STANDARD DRAWING FOR

METHOD FOR PLACEMENT OF DROP INLETS IN CONCRETE ISLANDS

SHEET 1 OF 1

852.06

STATE OF
NORTH CAROLINA
DEPT. OF TRANSPORTATION
DIVISION OF HIGHWAYS
RALEIGH, N.C.

1-12

ENGLISH STANDARD DRAWING FOR

MEDIAN CONSTRUCTION

WITH CURB AND GUTTER

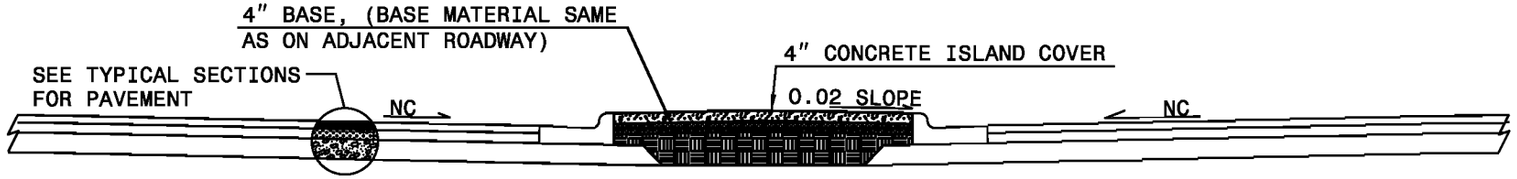

4" CONCRETE COVER

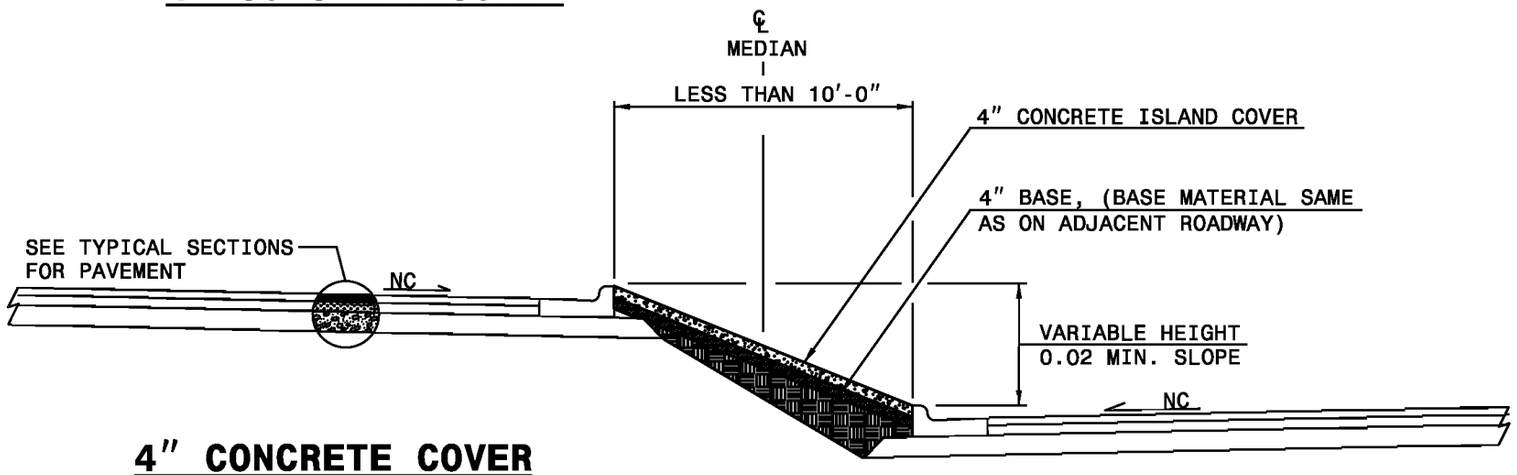

4" CONCRETE COVER
VARIABLE GRADE SEPARATIONS

NOTE: SLOPE MEDIAN WIDTHS 10'-0" AND OVER FROM CENTERLINE OF MEDIAN TO BACK OF EACH CONCRETE CURB.

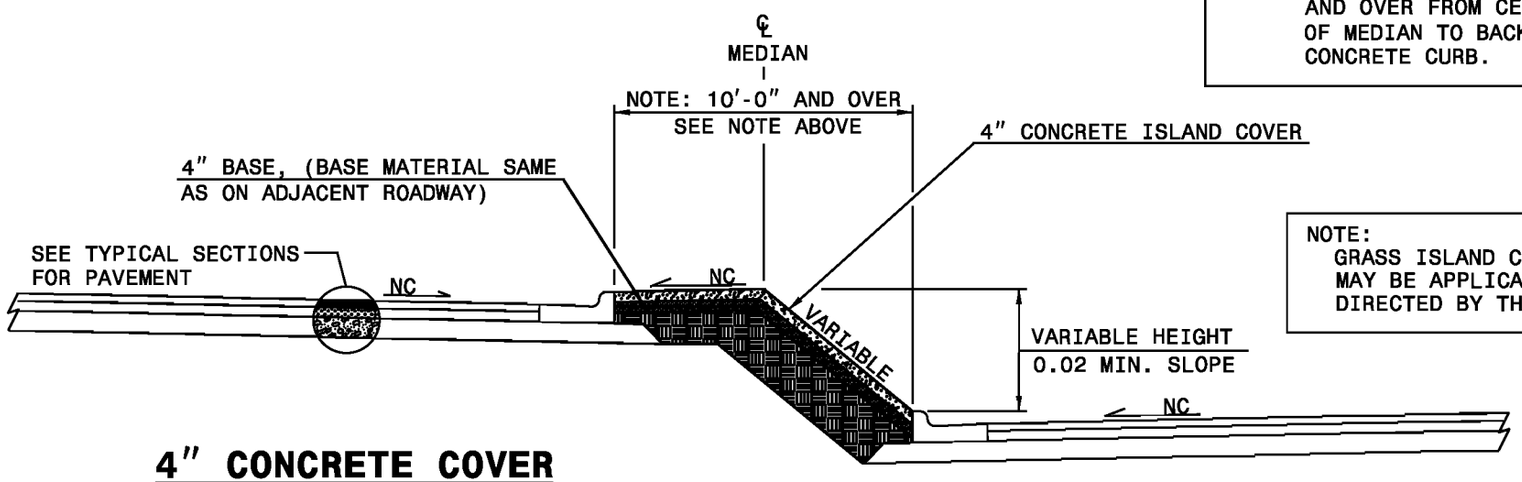

NOTE:
GRASS ISLAND CONSTRUCTION MAY BE APPLICABLE AS DIRECTED BY THE ENGINEER.

4" CONCRETE COVER
VARIABLE GRADE SEPARATION

SHEET 1 OF 1

852.10

STATE OF
NORTH CAROLINA
DEPT. OF TRANSPORTATION
DIVISION OF HIGHWAYS
RALEIGH, N.C.

1-12

ENGLISH STANDARD DRAWING FOR

MEDIAN CONSTRUCTION

WITH CURB AND GUTTER

SHEET 1 OF 1

852.10

STATE OF
NORTH CAROLINA
DEPT. OF TRANSPORTATION
DIVISION OF HIGHWAYS
RALEIGH, N.C.

1-12

ENGLISH STANDARD DRAWING FOR

DOUBLE FACED CONCRETE BARRIER

TYPES I, II, III & IV

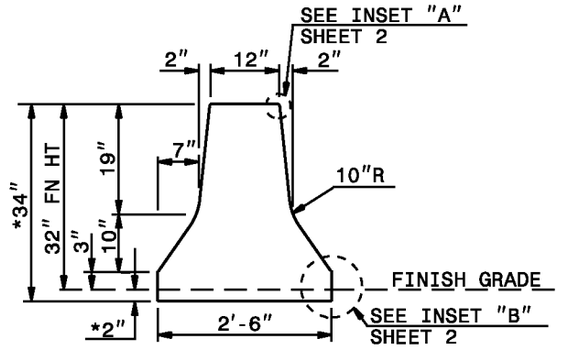

SECTION X-X

TYPE I - GLARE SCREEN PERMITTED

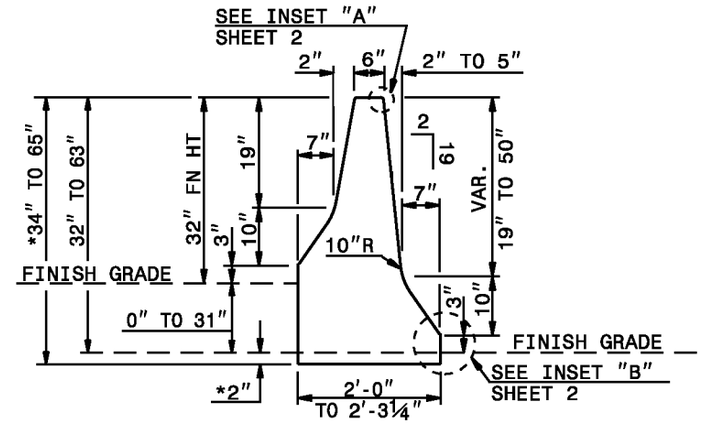

SECTION X-X

TYPE III - NO GLARE SCREEN PERMITTED

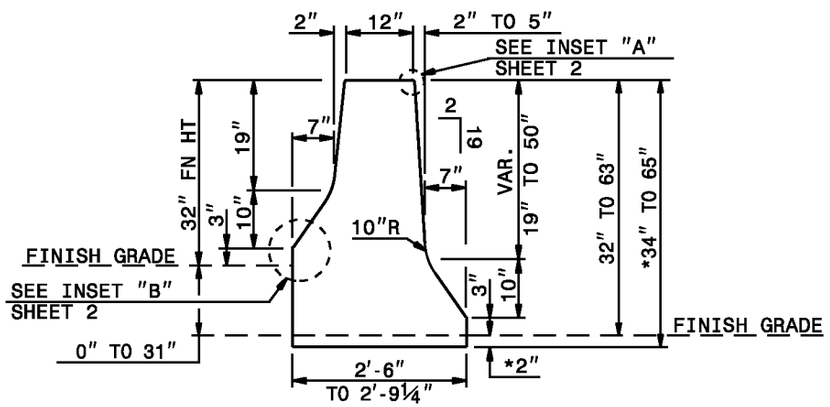

SECTION X-X

TYPE II - GLARE SCREEN PERMITTED

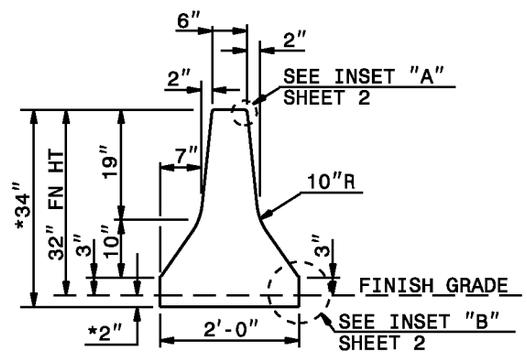

SECTION X-X

TYPE IV - NO GLARE SCREEN PERMITTED

NOTE:
REFER TO PLAN SHEET AND/OR TYPICAL SECTIONS FOR PROPER BARRIER ORIENTATION.

*THE 2" DIMENSION FROM FINSIH GRADE TO THE BASE IS A MINIMUM DIMENSION.
REFER TO PLAN TYPICAL SECTIONS AND PAVEMENT SCHEDULE TO DETERMINE KEY-IN DEPTH.

GENERAL NOTES:

CONSTRUCT CONCRETE BARRIER OF CLASS 'AA' CONCRETE. (SEE SPECIFICATIONS SECTION 854).

CONSTRUCT EXPANSION AND CONTRACTION JOINTS AS SHOWN ON SHEET 2.

SEAL EXPANSION JOINTS WITH JOINT FILLER. (SEE SECTION 1028 OF THE SPECIFICATIONS).

SUBMIT ALTERNATIVE METHODS FOR STEEL FABRICATION PLACEMENT FOR REVIEW.

STATE OF
NORTH CAROLINA
DEPT. OF TRANSPORTATION
DIVISION OF HIGHWAYS
RALEIGH, N.C.

1-12

ENGLISH STANDARD DRAWING FOR

DOUBLE FACED CONCRETE BARRIER

TYPES I, II, III & IV

SHEET 1 OF 4
854.01

STATE OF
NORTH CAROLINA
DEPT. OF TRANSPORTATION
DIVISION OF HIGHWAYS
RALEIGH, N.C.

1-12

ENGLISH STANDARD DRAWING FOR

DOUBLE FACED CONCRETE BARRIER

TYPES I, II, III & IV

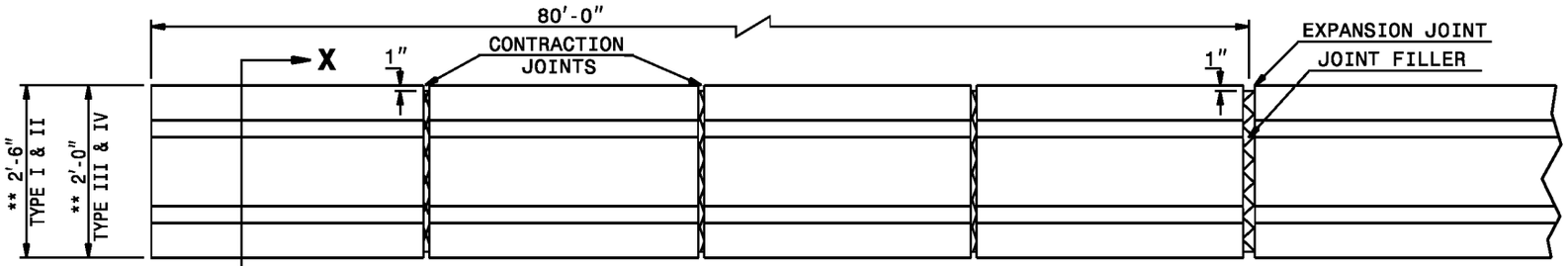

TOP PLAN VIEW

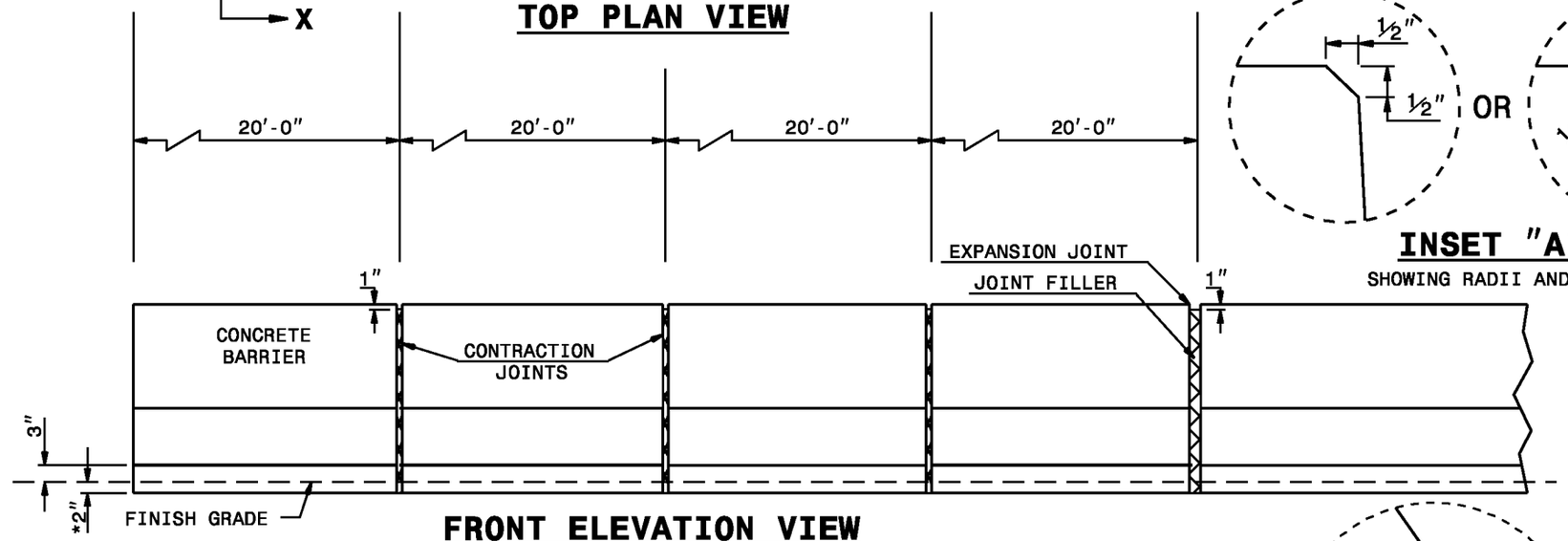

FRONT ELEVATION VIEW

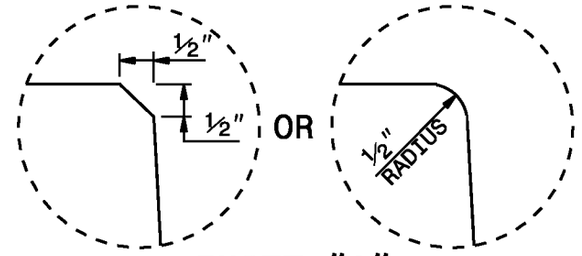

INSET "A"

SHOWING RADII AND BEVEL

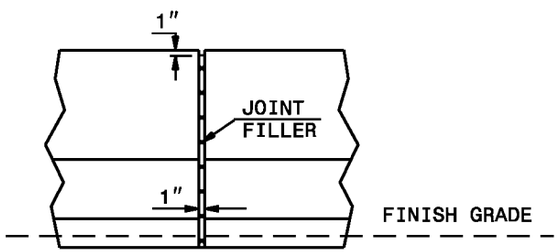

EXPANSION JOINT

PARTIAL ELEVATION VIEW

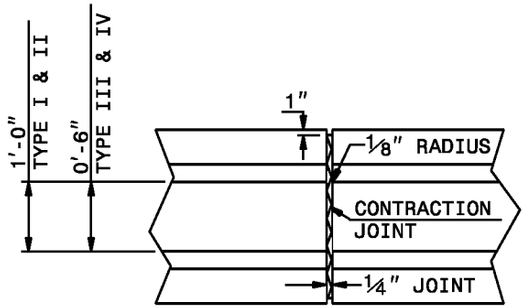

CONTRACTION JOINT

PARTIAL PLAN VIEW

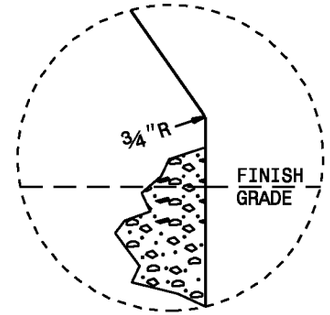

INSET "B"

SHOWING RADII

NOTES:

SEE SHEET 1 FOR GENERAL NOTES.
SEE SHEETS 3 THRU 4 FOR STEEL LAYOUT OF BARRIERS.
SEE GLARE SCREEN DETAIL FOR TYPES I & II.
NO GLARE SCREEN ALLOWED WITH TYPES III & IV.

* THE 2" DIMENSION FROM FINISH GRADE TO THE BASE IS A MINIMUM DIMENSION. REFER TO PLAN TYPICAL SECTIONS AND PAVEMENT SCHEDULE TO DETERMINE KEY-IN DEPTH.

** TYPE II AND III BARRIERS BASE MAY BE INCREASED BY A MAXIMUM OF 3¼" INCHES.

STATE OF
NORTH CAROLINA
DEPT. OF TRANSPORTATION
DIVISION OF HIGHWAYS
RALEIGH, N.C.

1-12

ENGLISH STANDARD DRAWING FOR

DOUBLE FACED CONCRETE BARRIER

TYPES I, II, III & IV

SHEET 2 OF 4

854.01

STATE OF
NORTH CAROLINA
DEPT. OF TRANSPORTATION
DIVISION OF HIGHWAYS
RALEIGH, N.C.

1-12

ENGLISH STANDARD DRAWING FOR

DOUBLE FACED CONCRETE BARRIER

TYPES I, II, III & IV

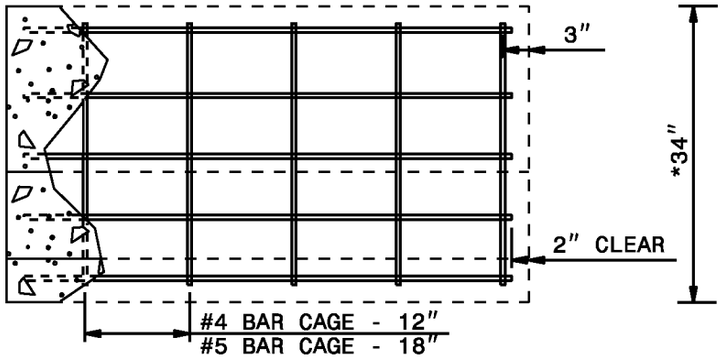

ELEVATION VIEW

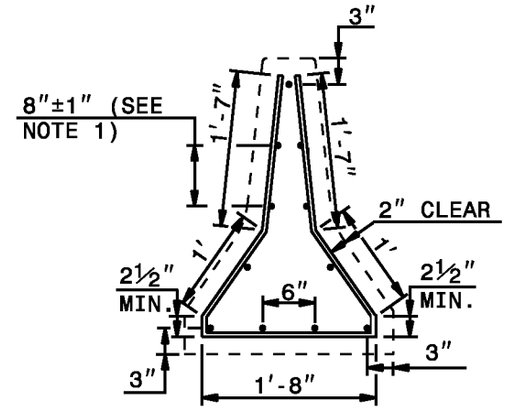

SECTION VIEW

TYPE IV
2'-0" BASE

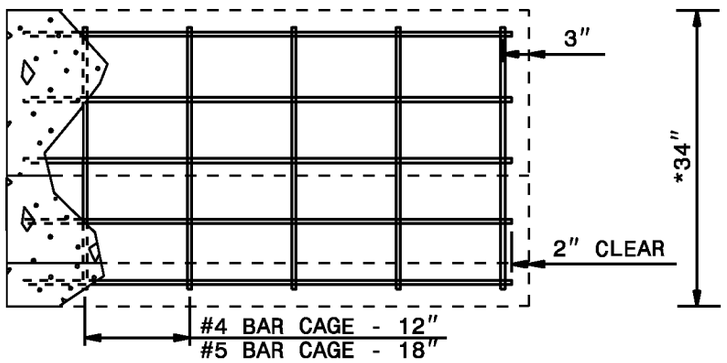

ELEVATION VIEW

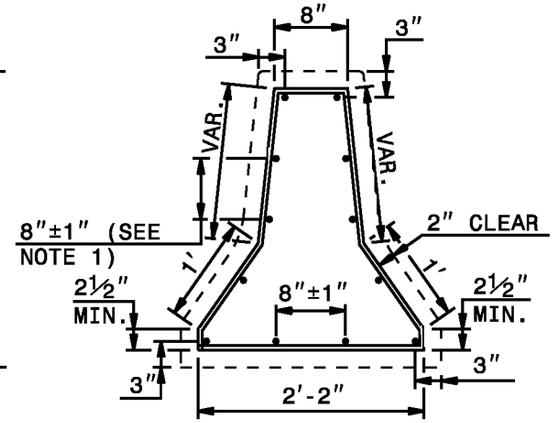

SECTION VIEW

TYPE I
2'-6" BASE

NOTES:

1. EVENLY SPACE HORIZONTAL REBAR 8"±1" UNLESS OTHERWISE NOTED.
2. USE #4 BAR FOR HORIZONTAL STEEL AND #4 OR #5 BAR FOR THE VERTICAL CAGE.
3. SUBMIT CHANGES IN STEEL PLACEMENT OR SIZE TO THE ENGINEER.
4. USE SPLICE LENGTHS EQUAL TO 20 TIMES THE DIAMETER OF THE BAR.

* REFER TO PLAN TYPICAL SECTIONS AND PAVEMENT SCHEDULE TO DETERMINE KEY-IN DEPTH. DIMENSIONS SHOWN ARE BASED ON A 2" MIN. KEY-IN DEPTH.

STEEL PLACEMENT FOR CAST-IN-PLACE OR SLIP-FORM CONCRETE BARRIER

STATE OF
NORTH CAROLINA
DEPT. OF TRANSPORTATION
DIVISION OF HIGHWAYS
RALEIGH, N.C.

1-12

ENGLISH STANDARD DRAWING FOR

DOUBLE FACED CONCRETE BARRIER

TYPES I, II, III & IV

STATE OF
NORTH CAROLINA
DEPT. OF TRANSPORTATION
DIVISION OF HIGHWAYS
RALEIGH, N.C.

1-12

ENGLISH STANDARD DRAWING FOR

DOUBLE FACED CONCRETE BARRIER

TYPES I, II, III & IV

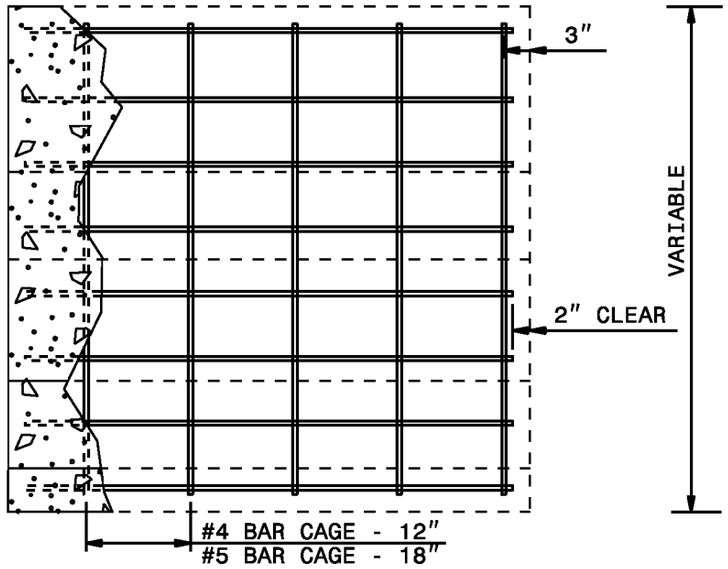

ELEVATION VIEW

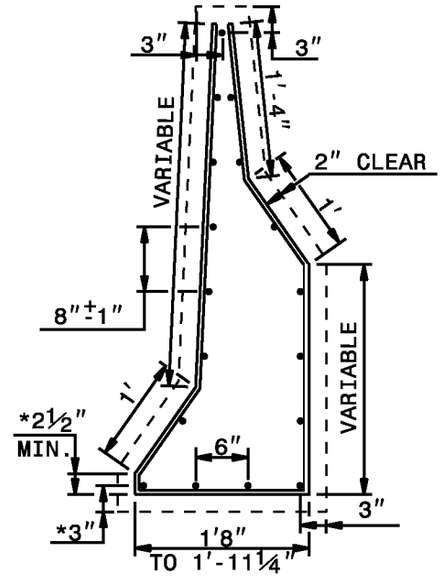

SECTION VIEW

TYPE III

MIN. 2'-0" BASE

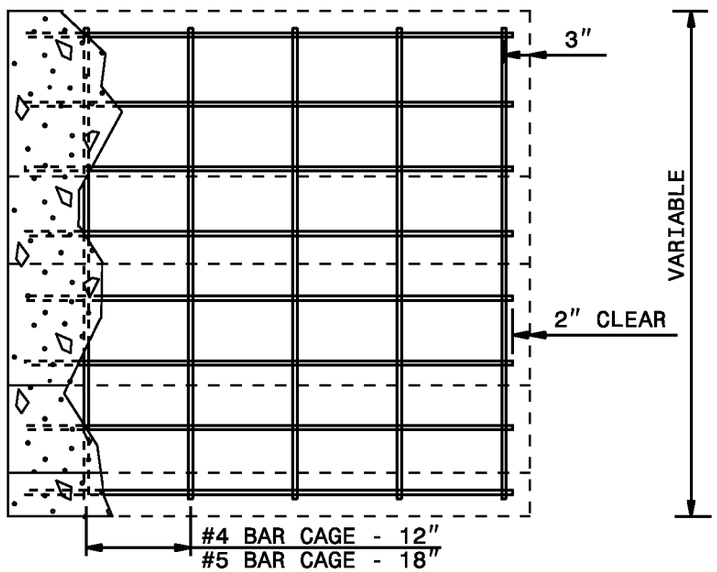

ELEVATION VIEW

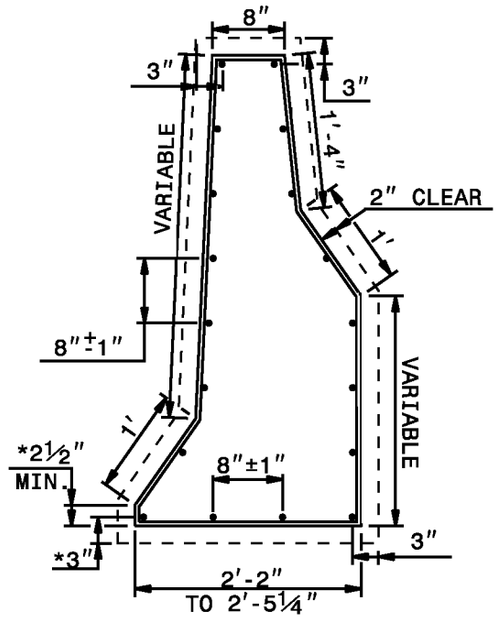

SECTION VIEW

TYPE II

MIN. 2'-6" BASE

NOTES:
1. EVENLY SPACE HORIZONTAL REBAR 8"±1" UNLESS OTHERWISE NOTED.
2. USE #4 BAR HORIZONTAL STEEL AND #4 OR #5 FOR VERTICAL CAGE.
3. SUBMIT CHANGES IN STEEL PLACEMENT OR SIZE TO THE ENGINEER.
4. USE SPLICE LENGTHS EQUAL TO 20 TIMES THE DIAMETER OF THE BAR.

* REFER TO PLAN TYPICAL SECTIONS AND PAVEMENT SCHEDULE TO DETERMINE KEY-IN DEPTH. DIMENSIONS SHOWN ARE BASED ON A 2" MIN. KEY-IN DEPTH.

STEEL PLACEMENT FOR CAST-IN-PLACE OR SLIP-FORM CONCRETE BARRIER

1-12

STATE OF
NORTH CAROLINA
DEPT. OF TRANSPORTATION
DIVISION OF HIGHWAYS
RALEIGH, N.C.

ENGLISH STANDARD DRAWING FOR

DOUBLE FACED CONCRETE BARRIER

TYPES I, II, III & IV

SHEET 4 OF 4
854.01

STATE OF
NORTH CAROLINA
DEPT. OF TRANSPORTATION
DIVISION OF HIGHWAYS
RALEIGH, N.C.

1-12

ENGLISH STANDARD DRAWING FOR

DOUBLE FACED CONCRETE BARRIER

TYPE T, T1 AND T2

SHEET 1 OF 4

854.02

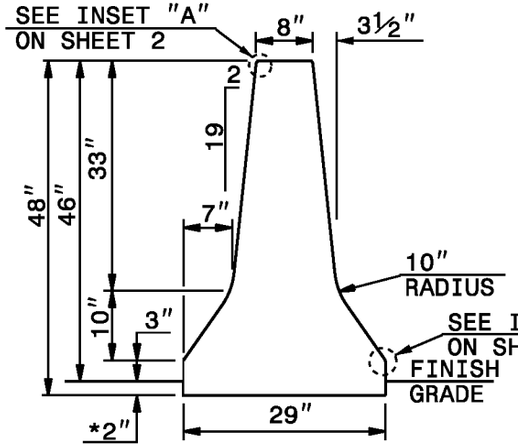

SECTION X-X

TYPE - T

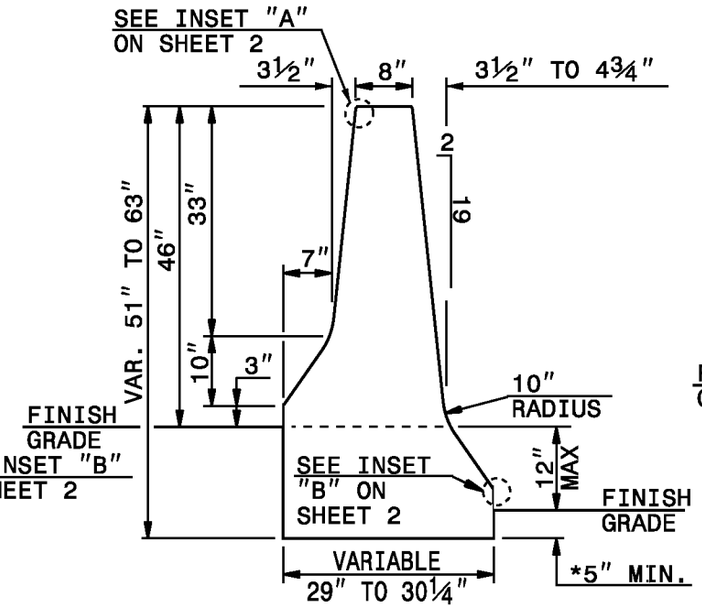

SECTION X-X

TYPE - T1

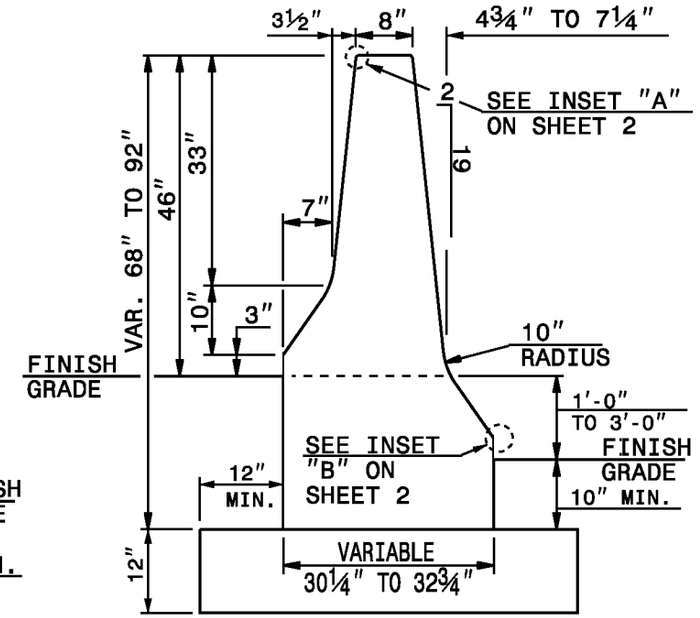

SECTION X-X

TYPE - T2

NOTE:
REFER TO PLAN SHEET AND/OR TYPICAL SECTIONS FOR PROPER BARRIER ORIENTATION.

*THE 2" OR 5" DIMENSION FROM FINSIH GRADE TO THE BASE IS A MINIMUM DIMENSION. REFER TO PLAN TYPICAL SECTIONS AND PAVEMENT SCHEDULE TO DETERMINE KEY-IN DEPTH.

GENERAL NOTES :

CONSTRUCT CONCRETE BARRIER OF CLASS 'AA' CONCRETE. (SEE SECTION 854 OF SPECIFICATIONS).
CONSTRUCT EXPANSION AND CONTRACTION JOINTS AS SHOWN ON SHEET 2.

SEAL ALL EXPANSION JOINTS WITH JOINT FILLER. (SEE SECTION 1028 OF THE SPECIFICATIONS).
SUBMIT ALTERNATIVE METHODS FOR STEEL FABRICATION TO THE ENGINEER.

STATE OF
NORTH CAROLINA
DEPT. OF TRANSPORTATION
DIVISION OF HIGHWAYS
RALEIGH, N.C.

1-12

ENGLISH STANDARD DRAWING FOR

DOUBLE FACED CONCRETE BARRIER

TYPE T, T1 AND T2

SHEET 1 OF 4

854.02

STATE OF
NORTH CAROLINA
DEPT. OF TRANSPORTATION
DIVISION OF HIGHWAYS
RALEIGH, N.C.

1-12

ENGLISH STANDARD DRAWING FOR

DOUBLE FACED CONCRETE BARRIER

TYPE T, T1 AND T2

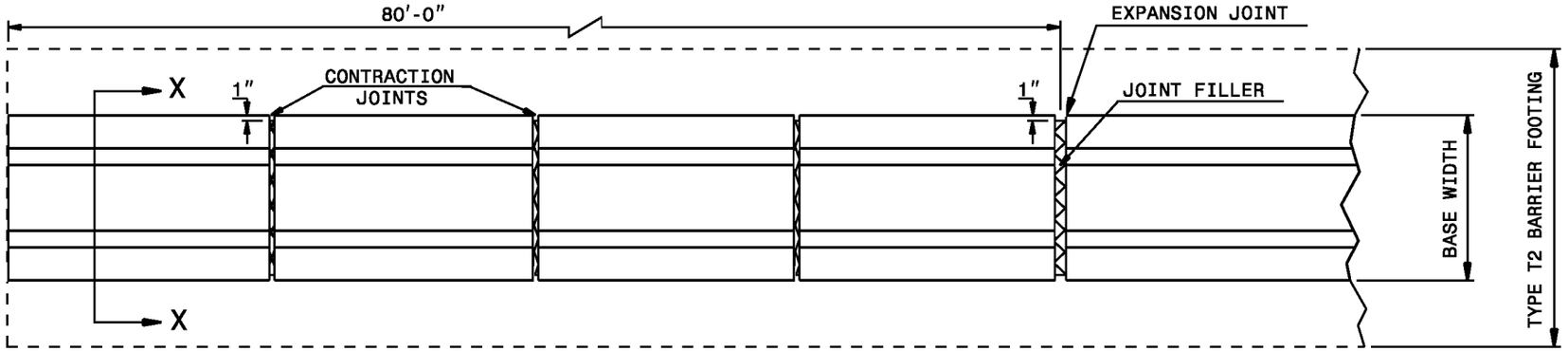

TOP PLAN VIEW

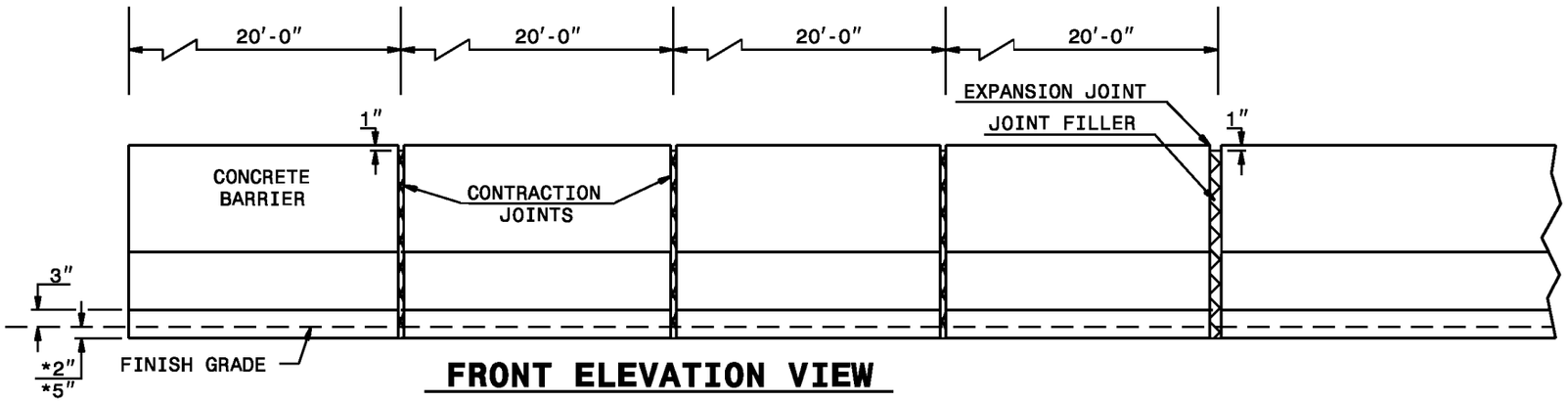

FRONT ELEVATION VIEW

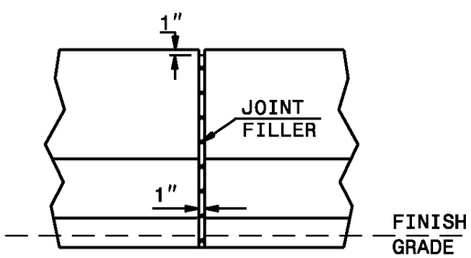

EXPANSION JOINT

PARTIAL ELEVATION VIEW

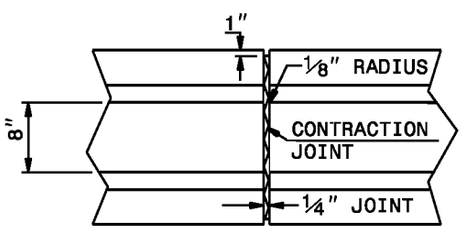

CONTRACTION JOINT

PARTIAL PLAN VIEW

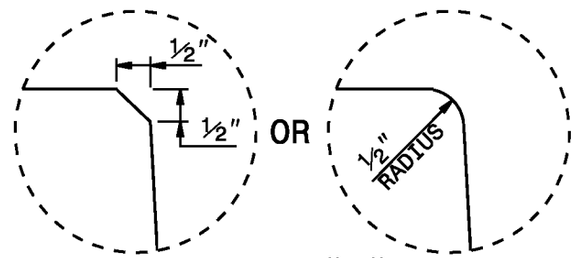

INSET "A"

SHOWING RADII AND BEVEL

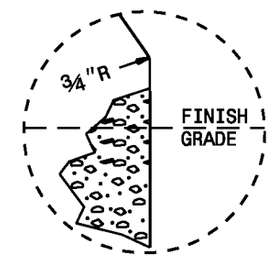

INSET "B"

SHOWING RADII

NOTES:

SEE SHEET 1 FOR GENERAL NOTES.
SEE SHEETS 3 THRU 4 FOR STEEL LAYOUT OF BARRIERS.

* THE 2" AND 5" DIMENSION FROM FINISH GRADE TO THE BASE IS A MINIMUM DIMENSION. REFER TO PLAN TYPICAL SECTIONS AND PAVEMENT SCHEDULE TO DETERMINE KEY-IN DEPTH.

STATE OF
NORTH CAROLINA
DEPT. OF TRANSPORTATION
DIVISION OF HIGHWAYS
RALEIGH, N.C.

1-12

ENGLISH STANDARD DRAWING FOR

DOUBLE FACED CONCRETE BARRIER

TYPE T, T1 AND T2

SHEET 2 OF 4

854.02

STATE OF
NORTH CAROLINA
DEPT. OF TRANSPORTATION
DIVISION OF HIGHWAYS
RALEIGH, N.C.

1-12

ENGLISH STANDARD DRAWING FOR

DOUBLE FACED CONCRETE BARRIER

TYPE T, T1 AND T2

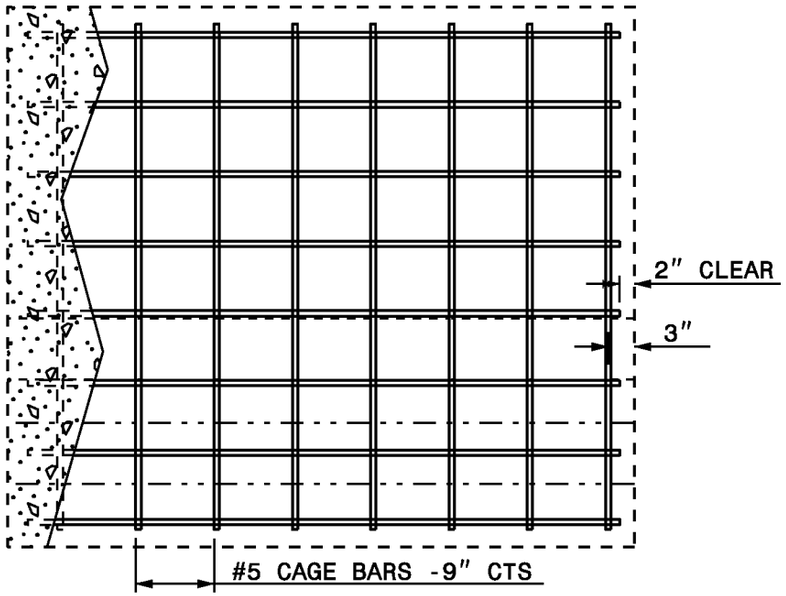

ELEVATION VIEW

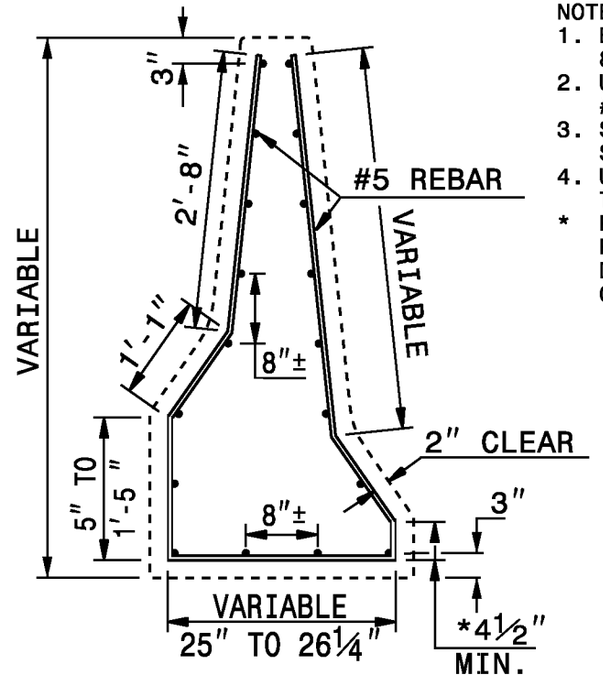

SECTION VIEW

NOTES:
1. EVENLY SPACE HORIZONTAL REBAR 8"±1" UNLESS OTHERWISE NOTED.
2. USE #5 BAR FORHORIZONTAL STEEL AND #5 BAR FOR VERTICAL CAGE.
3. SUBMIT CHANGES IN STEEL PLACEMENT OR SIZE TO THE ENGINEER.
4. USE SPLICE LENGTHS EQUAL TO 20 TIMES THE DIAMETER OF THE BAR.

* REFER TO PLAN TYPICAL SECTIONS AND PAVEMENT SCHEDULE TO DETERMINE KEY-IN DEPTH. DIMENSIONS SHOWN ARE BASED ON A MIN. KEY-IN DEPTH.

TYPE T-1

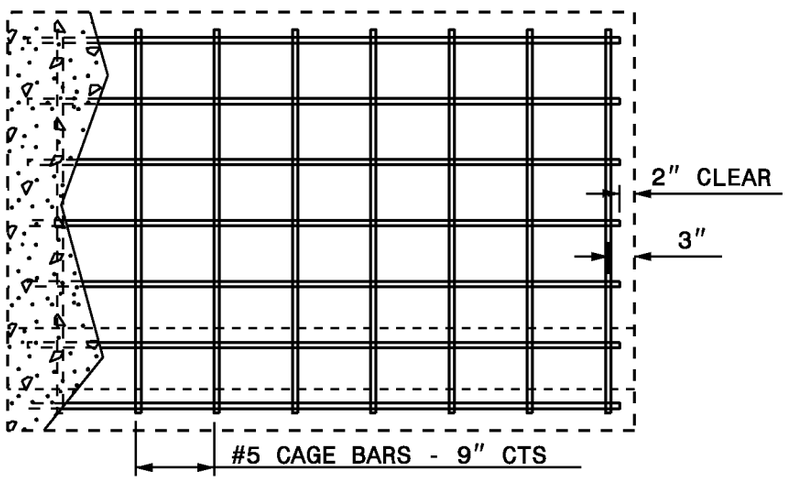

ELEVATION VIEW

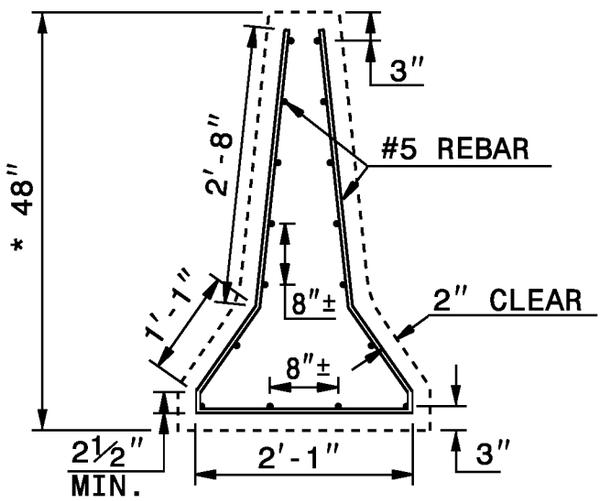

SECTION VIEW

TYPE T

STEEL PLACEMENT FOR CAST-IN-PLACE OR SLIP-FORM CONCRETE BARRIER

SHEET 3 OF 4

854.02

STATE OF
NORTH CAROLINA
DEPT. OF TRANSPORTATION
DIVISION OF HIGHWAYS
RALEIGH, N.C.

1-12

ENGLISH STANDARD DRAWING FOR

DOUBLE FACED CONCRETE BARRIER

TYPE T, T1 AND T2

SHEET 3 OF 4

854.02

STATE OF
NORTH CAROLINA
DEPT. OF TRANSPORTATION
DIVISION OF HIGHWAYS
RALEIGH, N.C.

1-12

ENGLISH STANDARD DRAWING FOR

DOUBLE FACED CONCRETE BARRIER

TYPE T, T1 AND T2

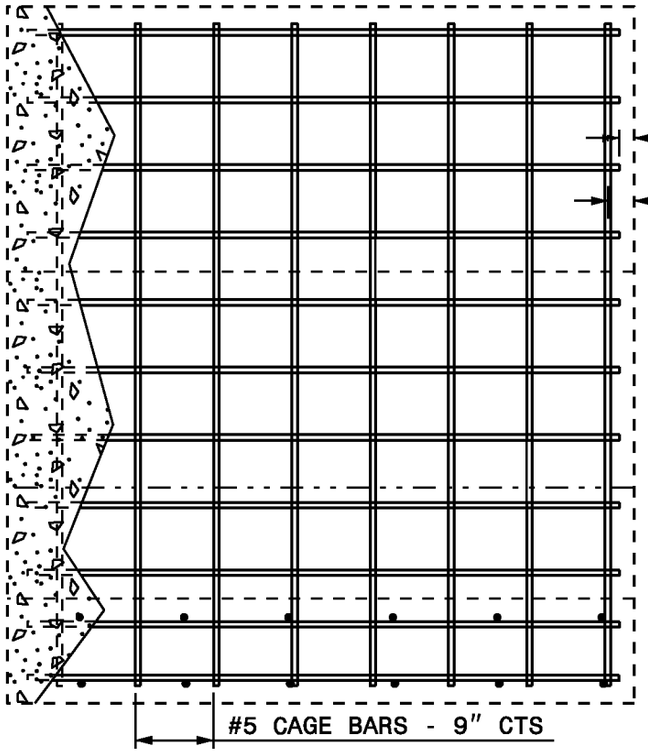

ELEVATION VIEW

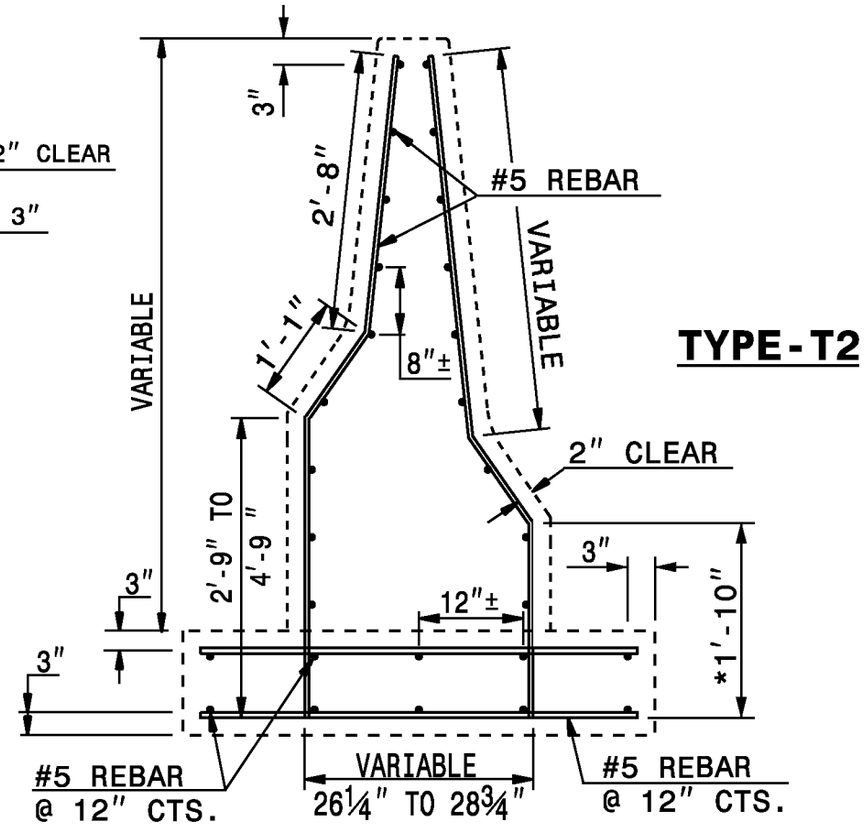

TYPE-T2

SECTION VIEW

NOTES:

1. EVENLY SPACE HORIZONTAL REBAR 8"±1" UNLESS OTHERWISE NOTED.
2. USE #5 BAR FOR HORIZONTAL STEEL AND #5 BAR FOR THE VERTICAL CAGE.
3. SUBMIT CHANGES IN STEEL PLACEMENT OR SIZE TO THE ENGINEER.
4. USE SPLICE LENGTHS EQUAL TO 20 TIMES THE DIAMETER OF THE BAR.

* REFER TO PLAN TYPICAL SECTIONS AND PAVEMENT SCHEDULE TO DETERMINE KEY-IN DEPTH. DIMENSIONS SHOWN ARE BASED ON A MIN. KEY-IN DEPTH.

STEEL PLACEMENT FOR CAST-IN-PLACE OR SLIP-FORM CONCRETE BARRIER

SHEET 4 OF 4

854.02

STATE OF
NORTH CAROLINA
DEPT. OF TRANSPORTATION
DIVISION OF HIGHWAYS
RALEIGH, N.C.

1-12

ENGLISH STANDARD DRAWING FOR

DOUBLE FACED CONCRETE BARRIER

TYPE T, T1 AND T2

SHEET 4 OF 4

854.02

STATE OF
NORTH CAROLINA
DEPT. OF TRANSPORTATION
DIVISION OF HIGHWAYS
RALEIGH, N.C.

1-12

ENGLISH STANDARD DRAWING FOR

CONCRETE MEDIAN BARRIER

PRECAST PERMANENT

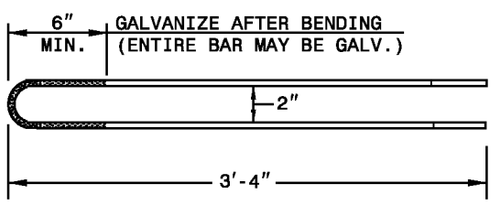

TOP VIEW

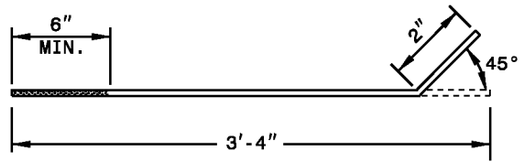

SIDE VIEW
LOOP BAR
¾" DIA. (A36M)

REINFORCEMENT DETAIL

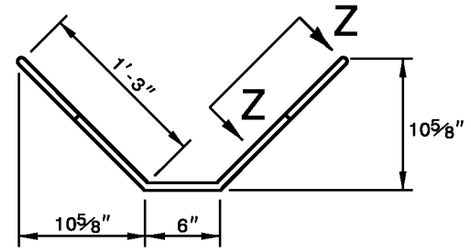

VIEW Z-Z

S1 BARS
#5 BARS

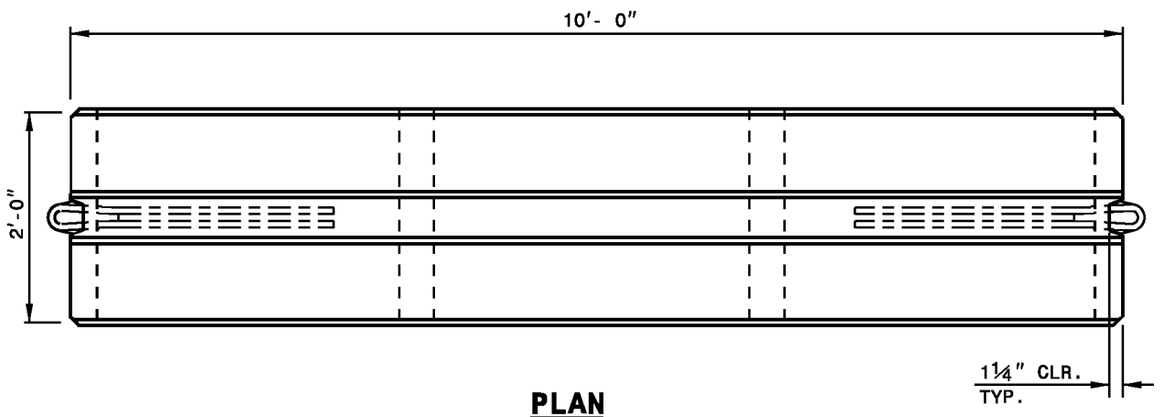

PLAN

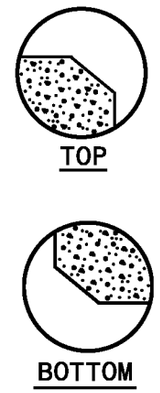

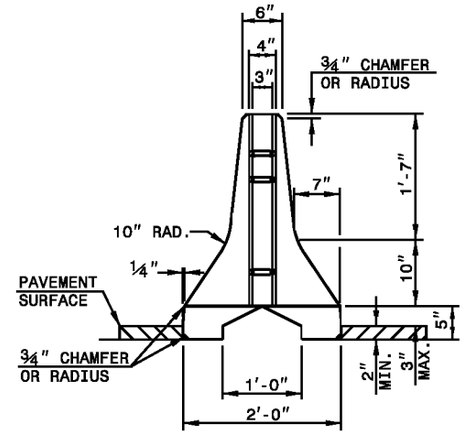

END VIEW A-A

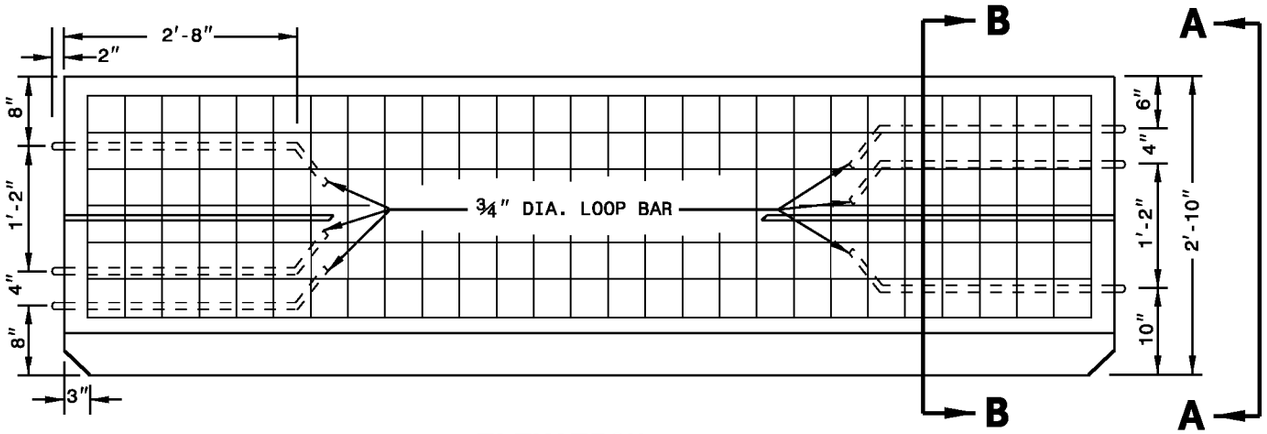

ELEVATION

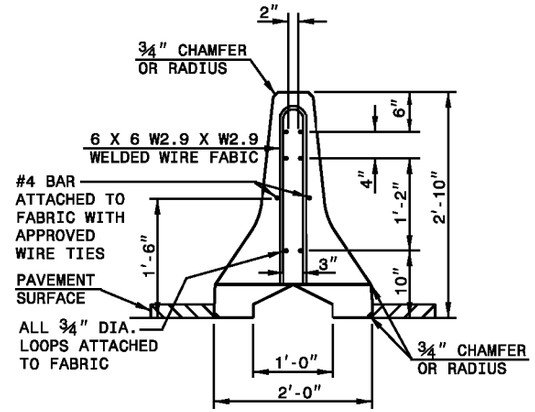

SECTION B-B

SHEET 1 OF 2
854.04

STATE OF
NORTH CAROLINA
DEPT. OF TRANSPORTATION
DIVISION OF HIGHWAYS
RALEIGH, N.C.

1-12

ENGLISH STANDARD DRAWING FOR

CONCRETE MEDIAN BARRIER

PRECAST PERMANENT

SHEET 1 OF 2
854.04

STATE OF
NORTH CAROLINA
DEPT. OF TRANSPORTATION
DIVISION OF HIGHWAYS
RALEIGH, N.C.

1-12

ENGLISH STANDARD DRAWING FOR
CONCRETE MEDIAN BARRIER
PRECAST PERMANENT

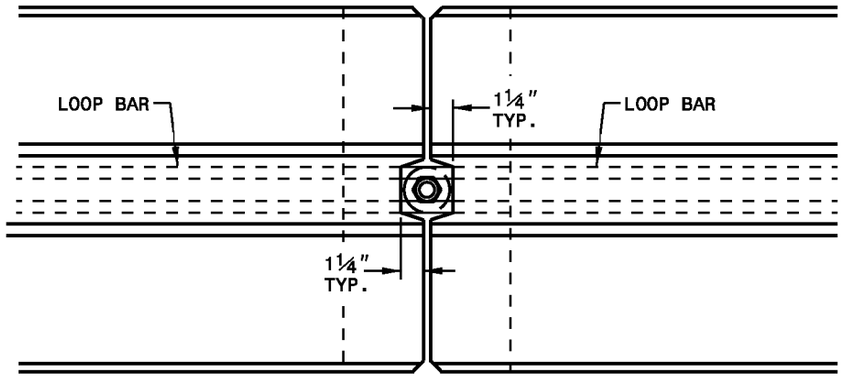

PLAN OF CONNECTION

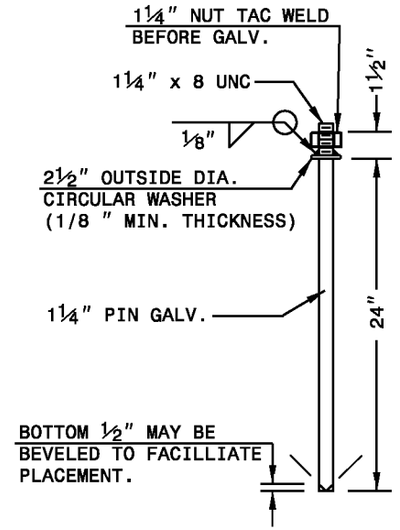

CONNECTOR PIN ASSEMBLY

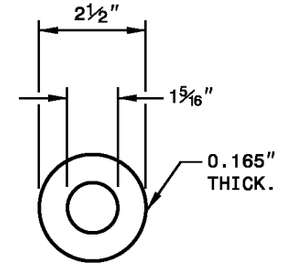

PLAIN GALVANIZED STEEL WASHER FOR 1¼" PIN

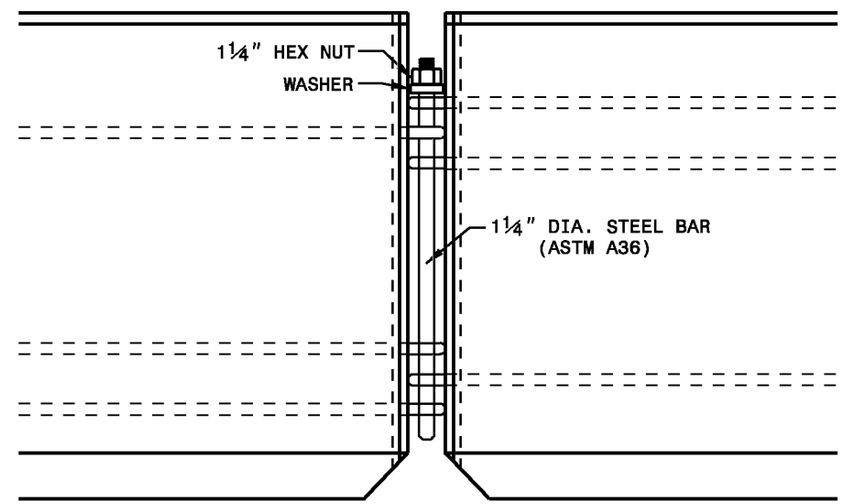

ELEVATION OF CONNECTION

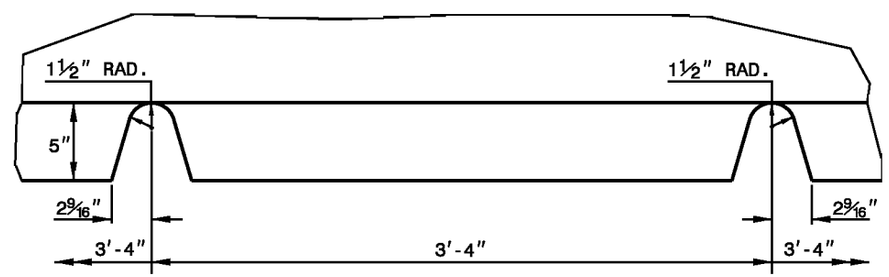

PART ELEVATION OF LIFT SLOT

SHEET 2 OF 2
854.04

STATE OF
NORTH CAROLINA
DEPT. OF TRANSPORTATION
DIVISION OF HIGHWAYS
RALEIGH, N.C.

1-12

ENGLISH STANDARD DRAWING FOR
CONCRETE MEDIAN BARRIER
PRECAST PERMANENT

SHEET 2 OF 2
854.04

STATE OF
NORTH CAROLINA
DEPT. OF TRANSPORTATION
DIVISION OF HIGHWAYS
RALEIGH, N.C.

1-12

ENGLISH STANDARD DRAWING FOR

CONCRETE MEDIAN TRANSITION BARRIER

LOCATION OF OVERHEAD ASSEMBLY

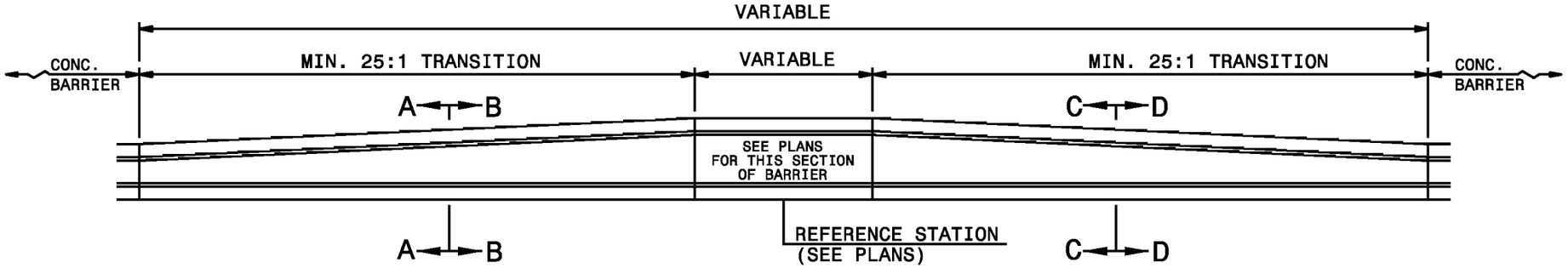

LEFT HAND TRANSITION

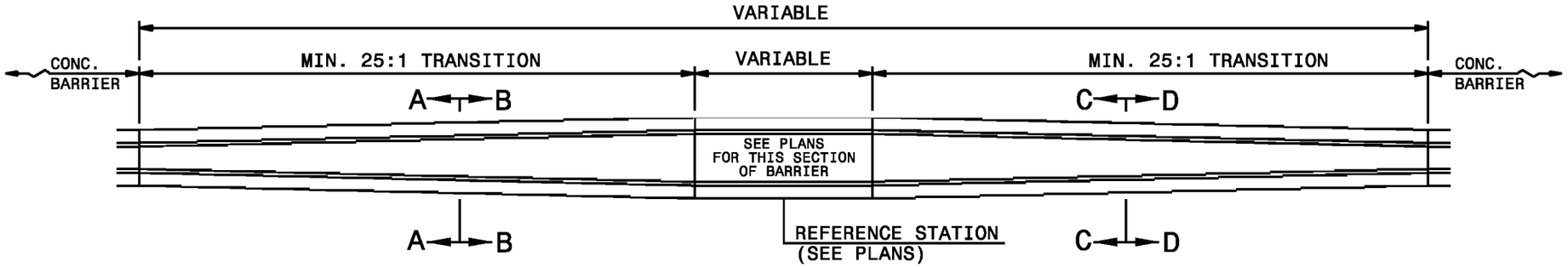

CENTER TRANSITION

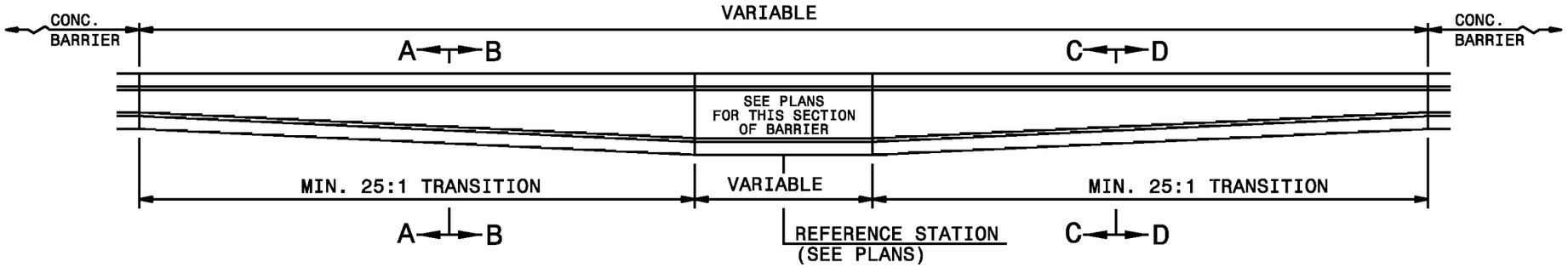

RIGHT HAND TRANSTION

NOTE:
SEE PLAN TYPICAL SECTIONS TO
DETERMINE SECTION VIEW DIRECTION.

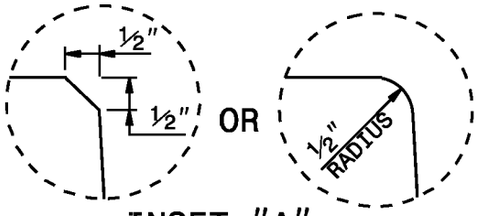

INSET "A"

SHOWING RADII AND BEVEL

STATE OF
NORTH CAROLINA
DEPT. OF TRANSPORTATION
DIVISION OF HIGHWAYS
RALEIGH, N.C.

1-12

ENGLISH STANDARD DRAWING FOR

CONCRETE MEDIAN TRANSITION BARRIER

LOCATION OF OVERHEAD ASSEMBLY

SHEET 1 OF 4
854.05

STATE OF
NORTH CAROLINA
DEPT. OF TRANSPORTATION
DIVISION OF HIGHWAYS
RALEIGH, N.C.

1-12

ENGLISH STANDARD DRAWING FOR

CONCRETE MEDIAN TRANSITION BARRIER

LOCATION OF OVERHEAD ASSEMBLY

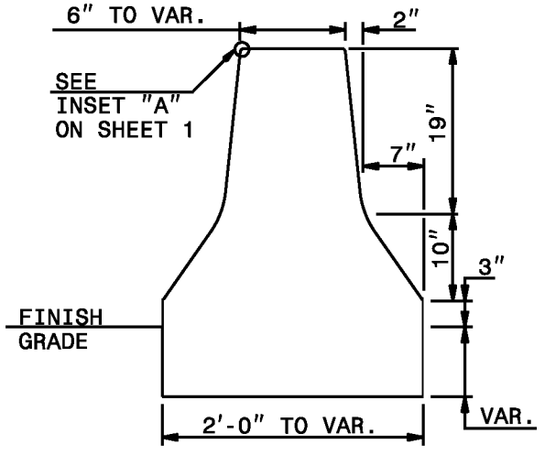

SECTION VIEW

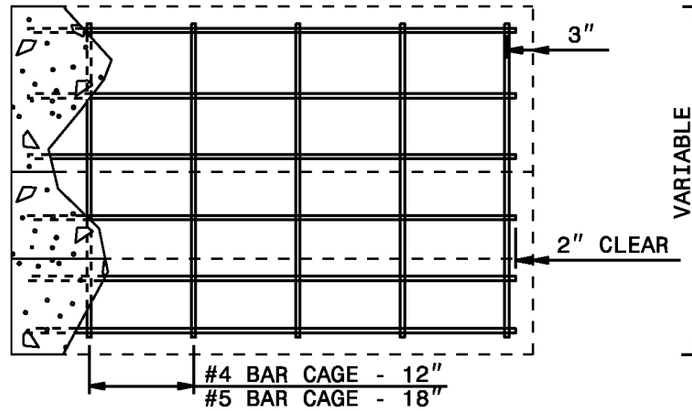

ELEVATION VIEW

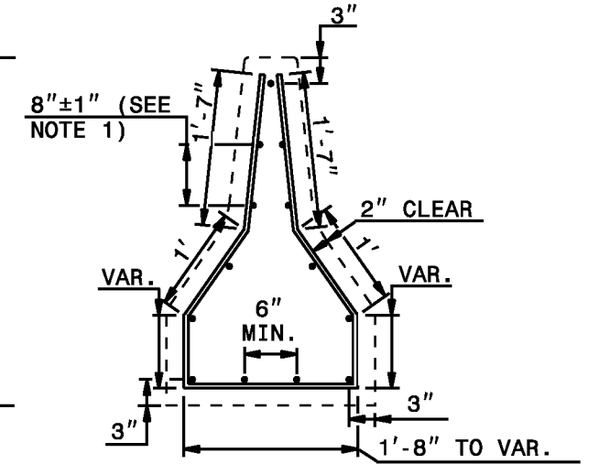

STEEL VIEW

DOUBLE FACE TRANSITION BARRIER
(NO GLARE SCREEN PERMITTED)

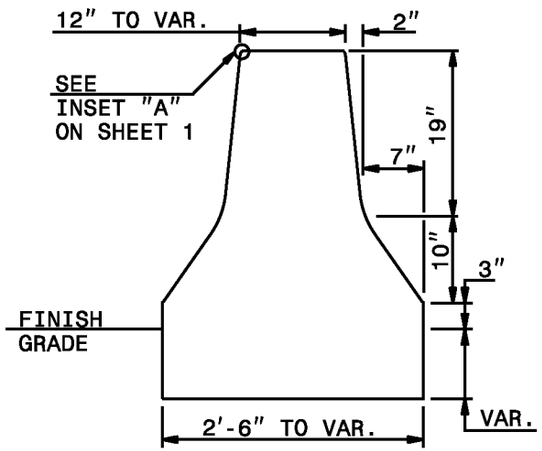

SECTION VIEW

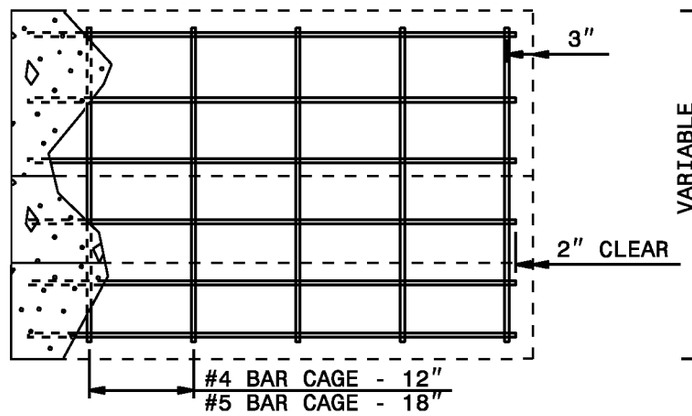

ELEVATION VIEW

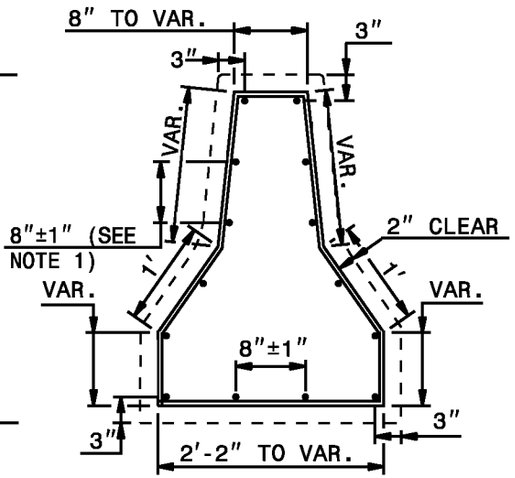

STEEL VIEW

DOUBLE FACE TRANSITION BARRIER
(GLARE SCREEN PERMITED)

NOTES:

1. EVENLY SPACE HORIZONTAL REBAR 8"±1" UNLESS OTHERWISE NOTED.
2. USE #4 BAR FOR HORIZONTAL STEEL AND #4 OR #5 BAR FOR THE VERTICAL CAGE.
3. SUBMIT CHANGES IN STEEL PLACEMENT OR SIZE TO THE ENGINEER.
4. CONSTRUCT THE TRANSITION BARRIER IN ACCORDANCE WITH SECTION 854 OF THE SPECIFICATIONS.

STATE OF
NORTH CAROLINA
DEPT. OF TRANSPORTATION
DIVISION OF HIGHWAYS
RALEIGH, N.C.

1-12

ENGLISH STANDARD DRAWING FOR

CONCRETE MEDIAN TRANSITION BARRIER

LOCATION OF OVERHEAD ASSEMBLY

SHEET 2 OF 4
854.05

STATE OF
NORTH CAROLINA
DEPT. OF TRANSPORTATION
DIVISION OF HIGHWAYS
RALEIGH, N.C.

1-12

ENGLISH STANDARD DRAWING FOR

CONCRETE MEDIAN TRANSITION BARRIER

LOCATION OF OVERHEAD ASSEMBLY

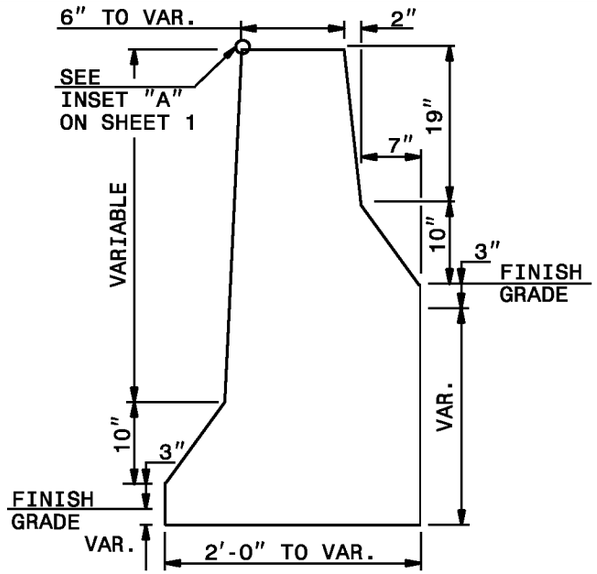

SECTION VIEW

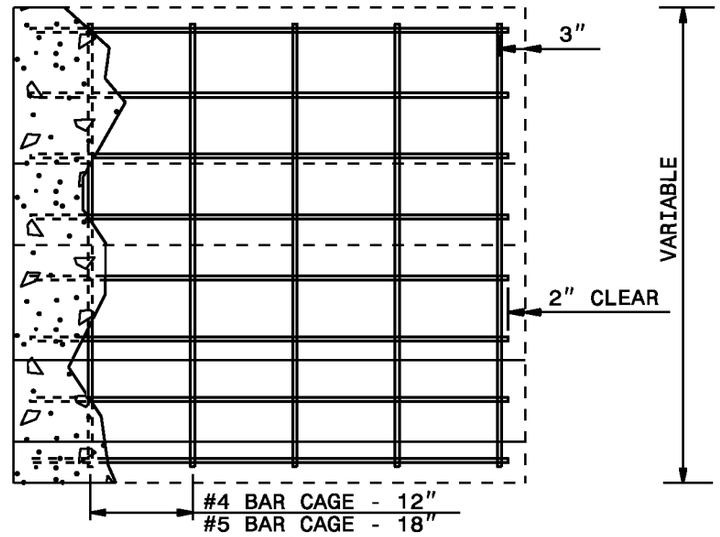

ELEVATION VIEW

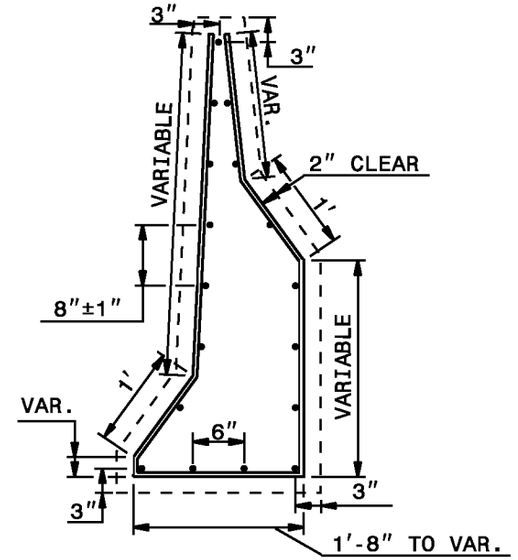

STEEL VIEW

TYPE III - 2'-0" BASE
DOUBLE FACE MEDIAN TRANSITION OFFSET BARRIER
(NO GLARE SCREEN PERMITTED)

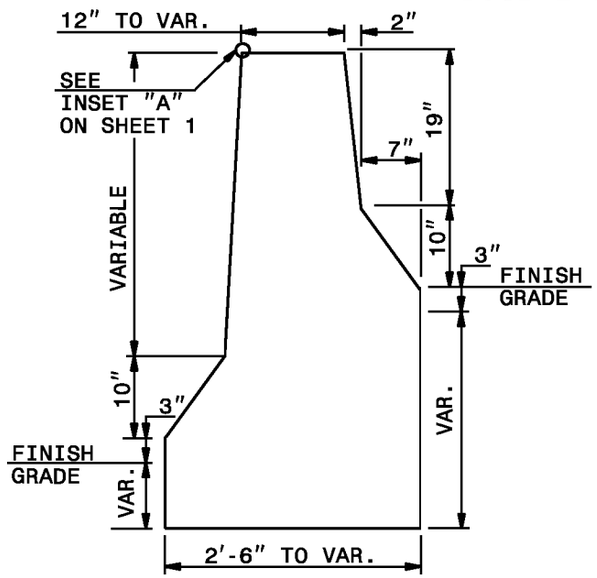

SECTION VIEW

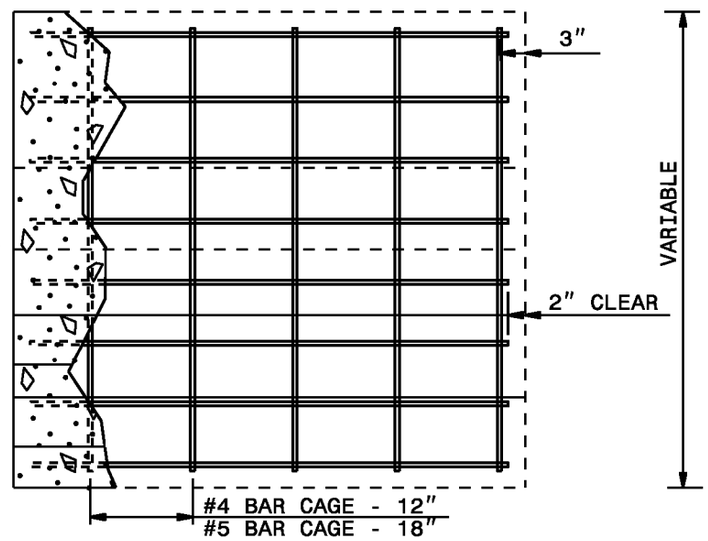

ELEVATION VIEW

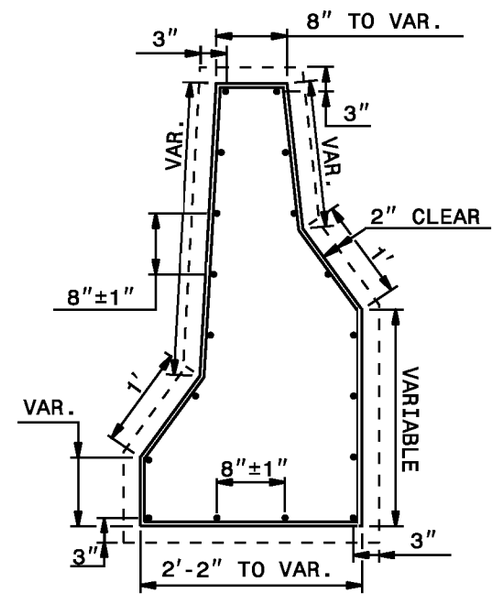

STEEL VIEW

TYPE II - 2'-6" BASE
DOUBLE FACE MEDIAN TRANSITION OFFSET BARRIER
(GLARE SCREEN PERMITTED)

NOTES: SEE SHEET 2.

STATE OF
NORTH CAROLINA
DEPT. OF TRANSPORTATION
DIVISION OF HIGHWAYS
RALEIGH, N.C.

1-12

ENGLISH STANDARD DRAWING FOR

CONCRETE MEDIAN TRANSITION BARRIER

LOCATION OF OVERHEAD ASSEMBLY

SHEET 3 OF 4
854.05

STATE OF
NORTH CAROLINA
DEPT. OF TRANSPORTATION
DIVISION OF HIGHWAYS
RALEIGH, N.C.

1-12

ENGLISH STANDARD DRAWING FOR

CONCRETE MEDIAN TRANSITION BARRIER

LOCATION OF OVERHEAD ASSEMBLY

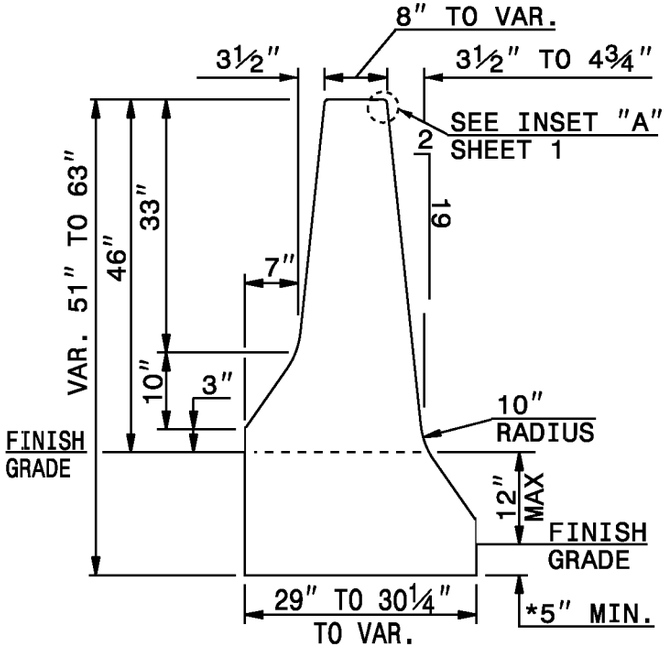

SECTION VIEW

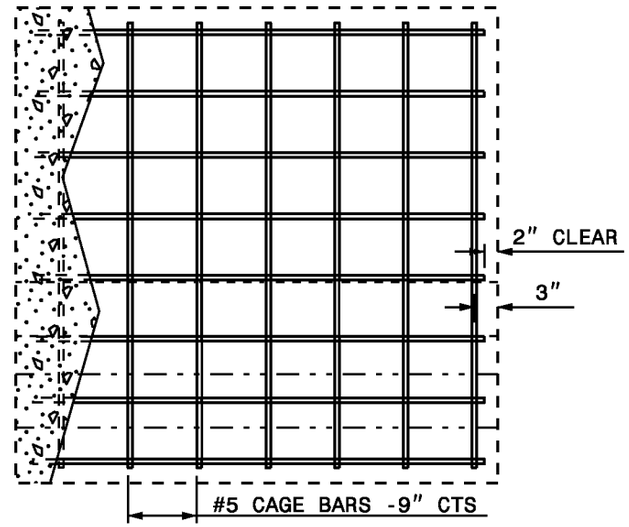

ELEVATION VIEW

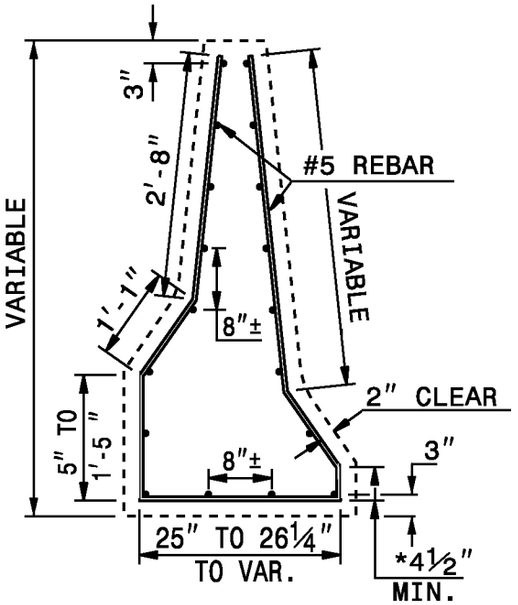

STEEL SECTION

TYPE T-1 OR T-2
DOUBLE FACE MEDIAN
TRANSITION OFFSET BARRIER

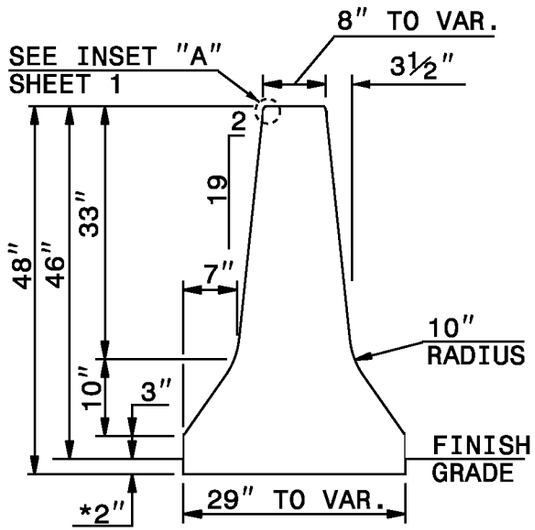

SECTION VIEW

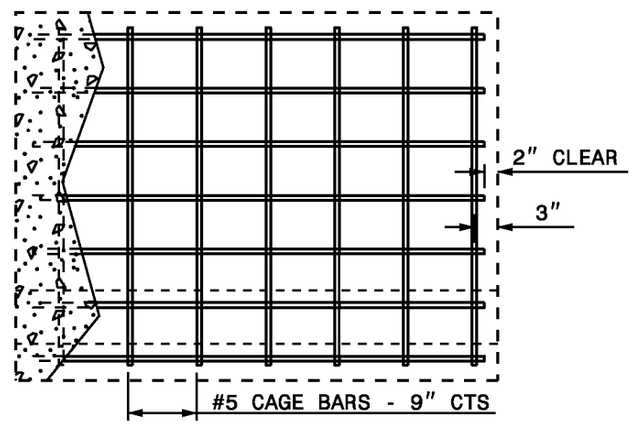

ELEVATION VIEW

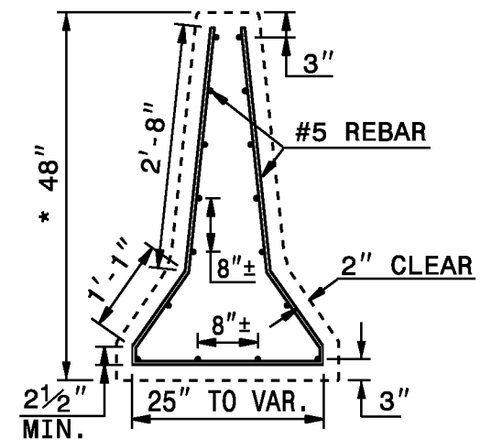

STEEL SECTION

TYPE T
DOUBLE FACE MEDIAN TRANSITION BARRIER

NOTES: SEE SHEET 2.

SHEET 4 OF 4

854.05

STATE OF
NORTH CAROLINA
DEPT. OF TRANSPORTATION
DIVISION OF HIGHWAYS
RALEIGH, N.C.

1-12

ENGLISH STANDARD DRAWING FOR

CONCRETE MEDIAN TRANSITION BARRIER

LOCATION OF OVERHEAD ASSEMBLY

SHEET 4 OF 4

854.05

STATE OF
NORTH CAROLINA
DEPT. OF TRANSPORTATION
DIVISION OF HIGHWAYS
RALEIGH, N.C.

1-12

ENGLISH STANDARD DRAWING FOR

PRECAST REINFORCED CONCRETE BARRIER

41" SINGLE FACED

SHEET 1 OF 8

857.01

NOTE:
1) THIS DRAWING IS NOT INTENDED TO SHOW TYPICAL BARRIER AND GUARDRAIL INSTALLATION.
IT DETAILS POSSIBLE BARRIER AND STRUCTURE ANCHOR COMBINATIONS FOR THIS TYPE FACILITY.

2) USE TRAILING END GUARDRAIL IF WARRANTED

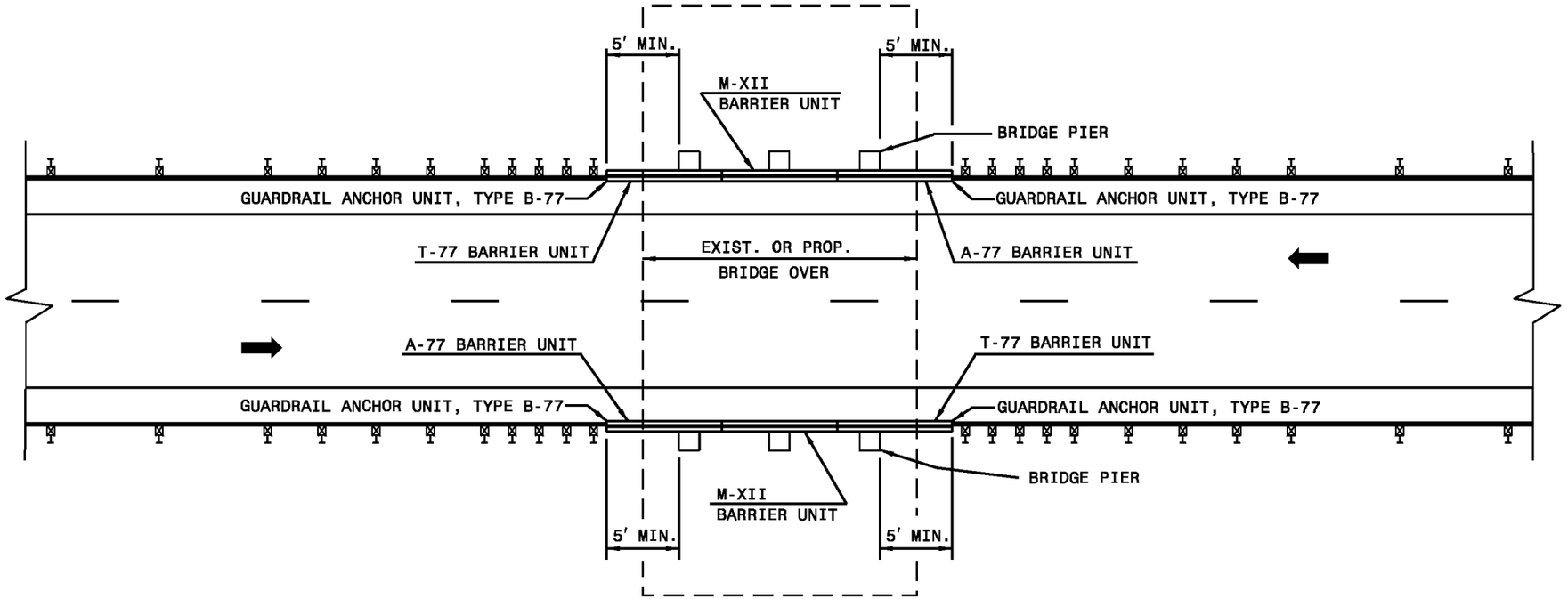

GUARDRAIL AND BARRIER AT UNDIVIDED HIGHWAY BRIDGE UNDERPASS

STATE OF
NORTH CAROLINA
DEPT. OF TRANSPORTATION
DIVISION OF HIGHWAYS
RALEIGH, N.C.

1-12

ENGLISH STANDARD DRAWING FOR

PRECAST REINFORCED CONCRETE BARRIER

41" SINGLE FACED

SHEET 1 OF 8

857.01

STATE OF
NORTH CAROLINA
DEPT. OF TRANSPORTATION
DIVISION OF HIGHWAYS
RALEIGH, N.C.

1-12

ENGLISH STANDARD DRAWING FOR

PRECAST REINFORCED CONCRETE BARRIER

41" SINGLE FACED

SHEET 2 OF 8

857.01

NOTE:
1) THIS DRAWING IS NOT INTENDED TO SHOW TYPICAL BARRIER AND GUARDRAIL INSTALLATION. IT DETAILS POSSIBLE BARRIER AND STRUCTURE ANCHOR COMBINATIONS FOR THIS TYPE FACILITY.
2) USE TRAILING END GUARDRAIL IF WARRANTED

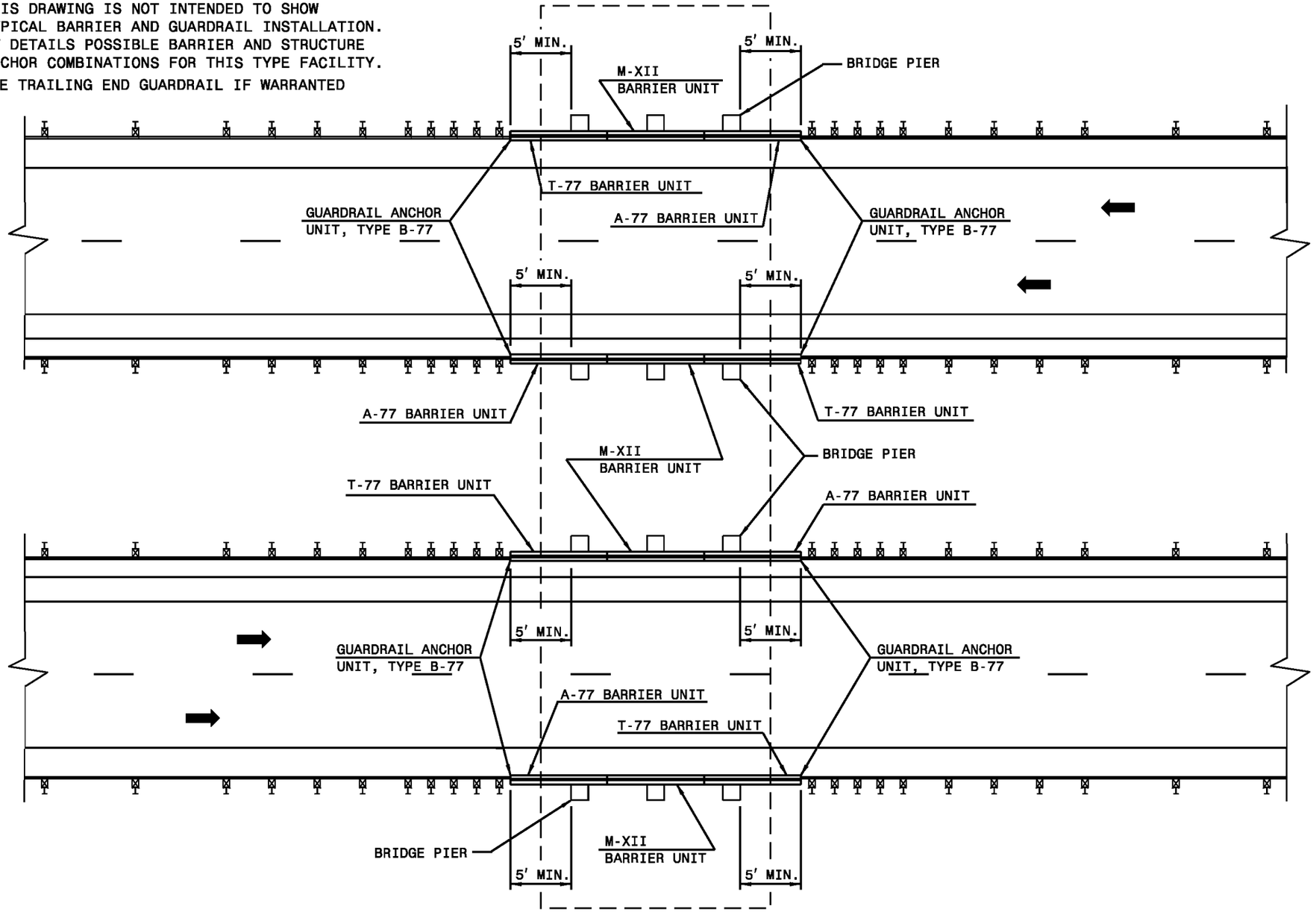

GUARDRAIL AND BARRIER AT DIVIDED HIGHWAY BRIDGE UNDERPASS

STATE OF
NORTH CAROLINA
DEPT. OF TRANSPORTATION
DIVISION OF HIGHWAYS
RALEIGH, N.C.

1-12

ENGLISH STANDARD DRAWING FOR

PRECAST REINFORCED CONCRETE BARRIER

41" SINGLE FACED

SHEET 2 OF 8

857.01

STATE OF
NORTH CAROLINA
DEPT. OF TRANSPORTATION
DIVISION OF HIGHWAYS
RALEIGH, N.C.

1-12

ENGLISH STANDARD DRAWING FOR

PRECAST REINFORCED CONCRETE BARRIER

41" SINGLE FACED

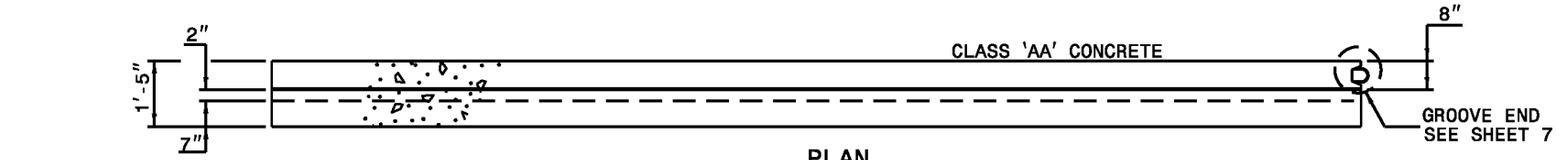

PLAN

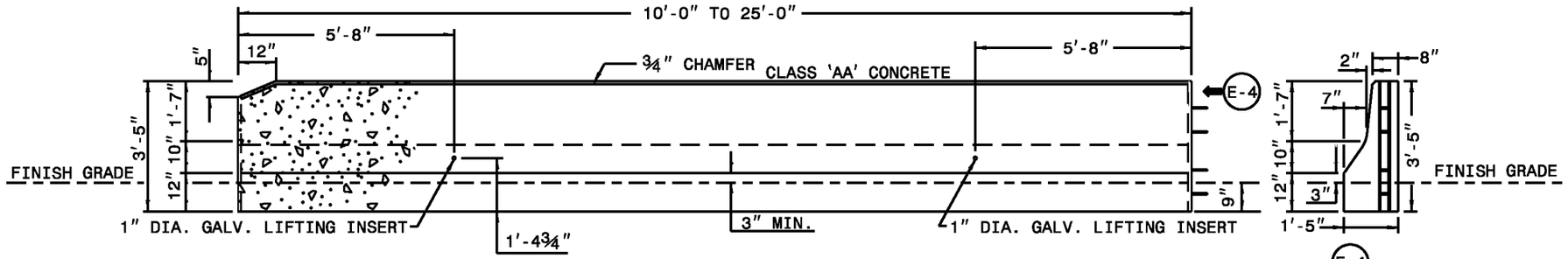

FRONT ELEVATION T-77 BARRIER UNIT
A-77 BARRIER UNIT OPPOSITE HAND

END
ELEVATION

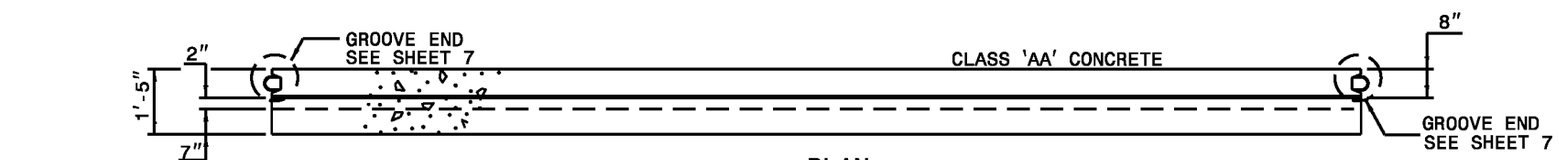

PLAN

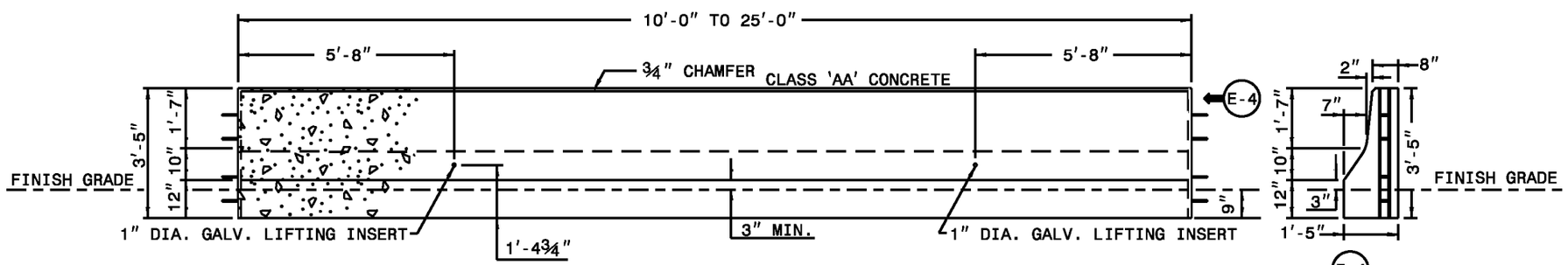

FRONT ELEVATION M-XII BARRIER UNIT

END
ELEVATION

SHEET 3 OF 8

857.01

STATE OF
NORTH CAROLINA
DEPT. OF TRANSPORTATION
DIVISION OF HIGHWAYS
RALEIGH, N.C.

1-12

ENGLISH STANDARD DRAWING FOR

PRECAST REINFORCED CONCRETE BARRIER

41" SINGLE FACED

SHEET 3 OF 8

857.01

STATE OF
NORTH CAROLINA
DEPT. OF TRANSPORTATION
DIVISION OF HIGHWAYS
RALEIGH, N.C.

1-12

ENGLISH STANDARD DRAWING FOR

PRECAST REINFORCED CONCRETE BARRIER

41" SINGLE FACED

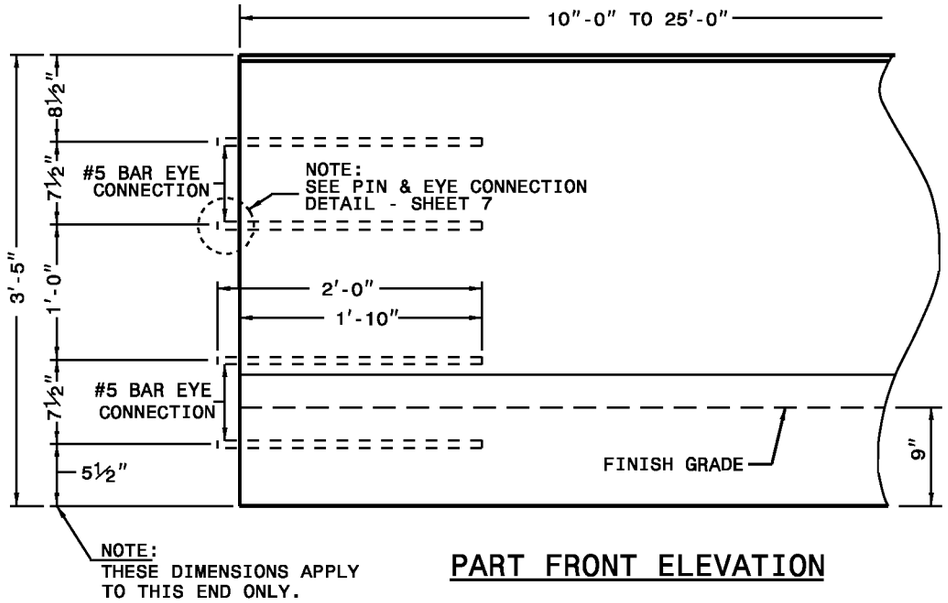

PART FRONT ELEVATION

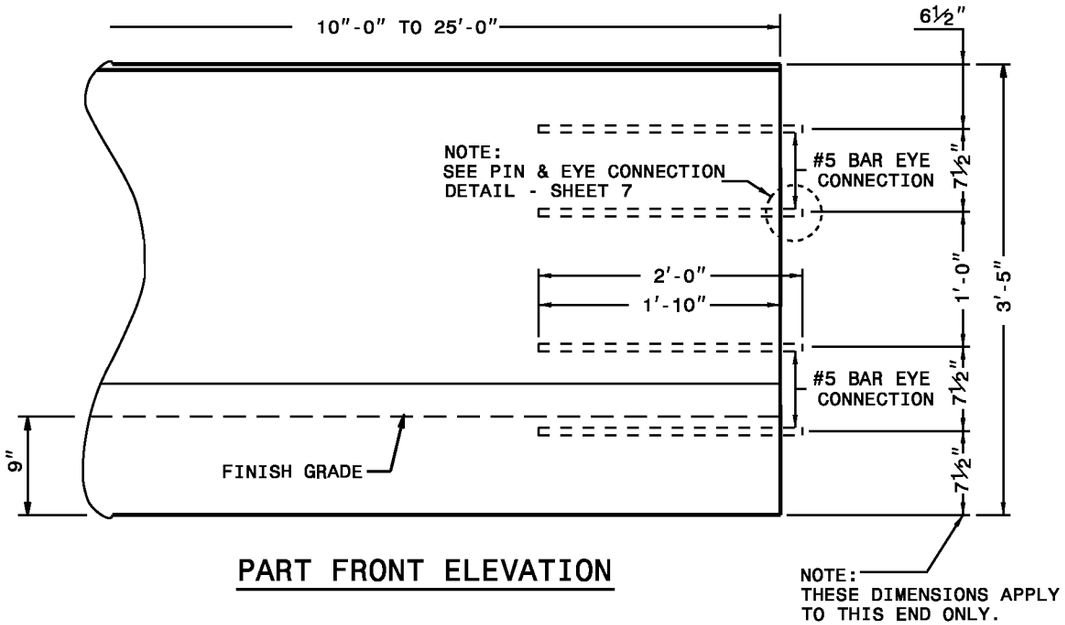

PART FRONT ELEVATION

ELEVATION VIEWS
SHOWING PLACEMENT OF EYE
BARS AT EACH END

SHEET 4 OF 8

857.01

STATE OF
NORTH CAROLINA
DEPT. OF TRANSPORTATION
DIVISION OF HIGHWAYS
RALEIGH, N.C.

1-12

ENGLISH STANDARD DRAWING FOR

PRECAST REINFORCED CONCRETE BARRIER

41" SINGLE FACED

SHEET 4 OF 8

857.01

STATE OF
NORTH CAROLINA
DEPT. OF TRANSPORTATION
DIVISION OF HIGHWAYS
RALEIGH, N.C.

1-12

ENGLISH STANDARD DRAWING FOR

PRECAST REINFORCED CONCRETE BARRIER

41" SINGLE FACED

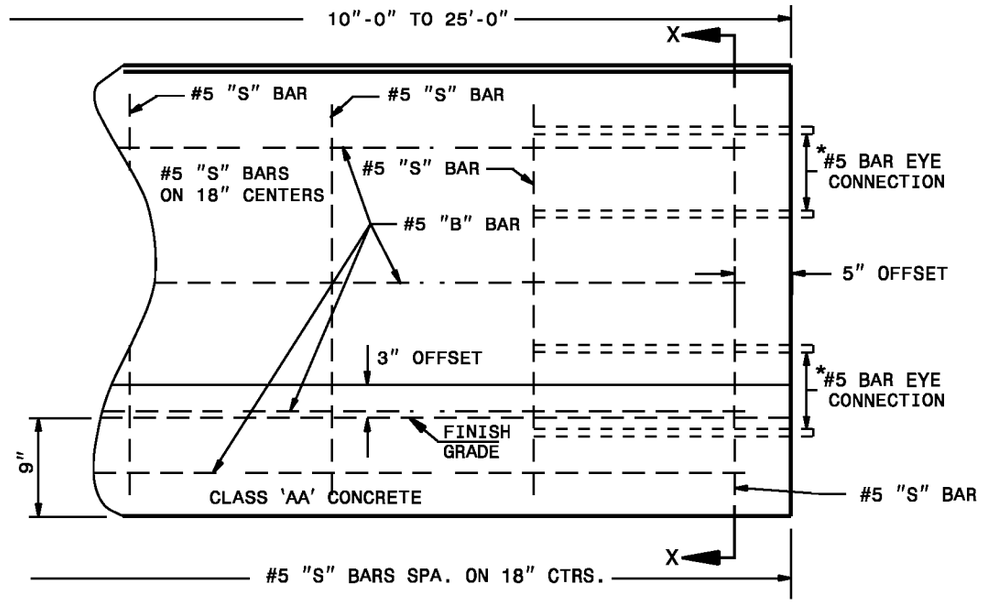

PART FRONT ELEVATION

*SEE SHEET 4
FOR DIMENSIONS

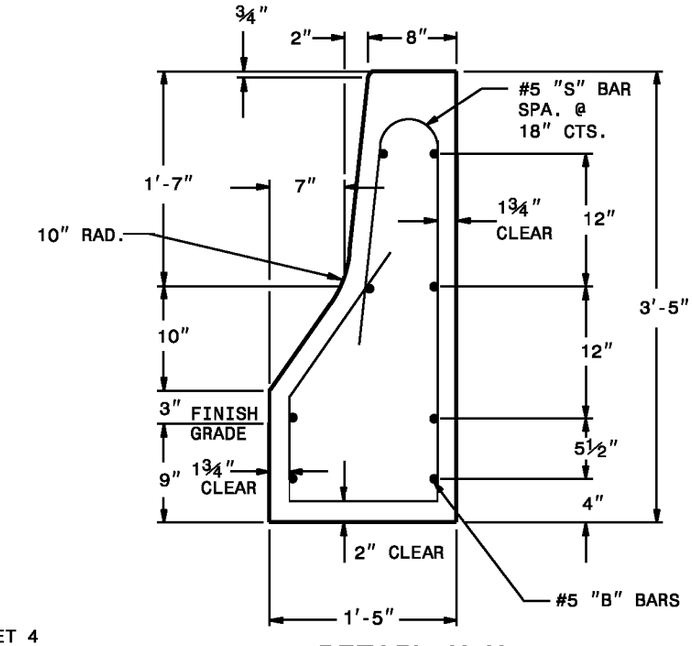

DETAIL X-X

CROSS SECTIONAL VIEW

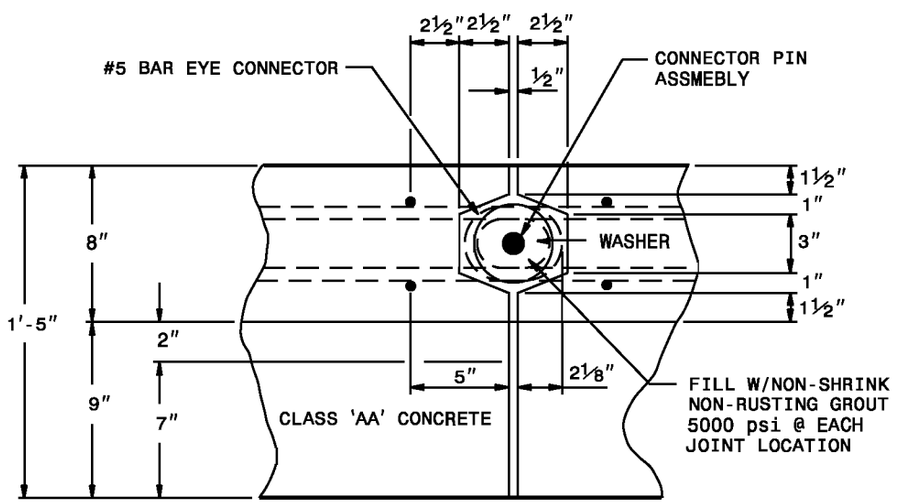

PLAN OF BONDED CONNECTION OF PRECAST UNIT

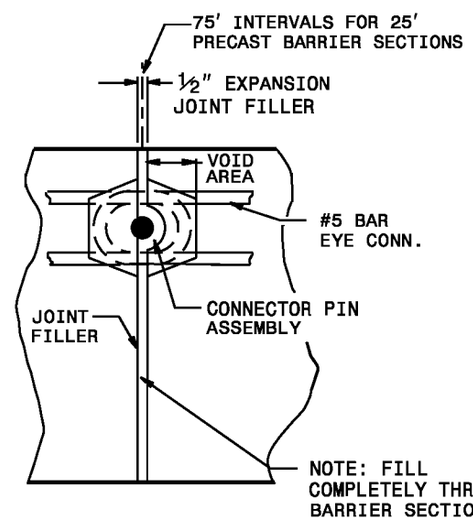

JOINT FILLER DETAIL

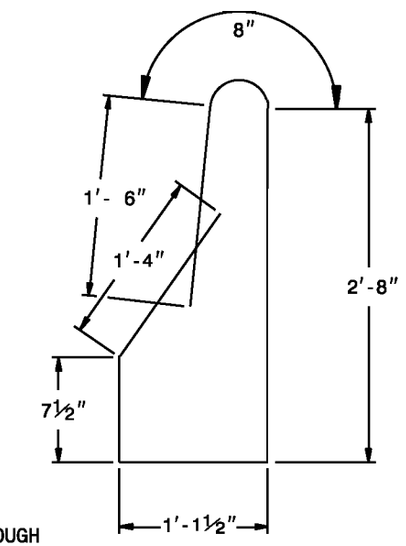

S - BARS

#5 BAR

STATE OF
NORTH CAROLINA
DEPT. OF TRANSPORTATION
DIVISION OF HIGHWAYS
RALEIGH, N.C.

1-12

ENGLISH STANDARD DRAWING FOR

PRECAST REINFORCED CONCRETE BARRIER

41" SINGLE FACED

SHEET 5 OF 8
857.01

STATE OF
NORTH CAROLINA
DEPT. OF TRANSPORTATION
DIVISION OF HIGHWAYS
RALEIGH, N.C.

1-12

ENGLISH STANDARD DRAWING FOR

PRECAST REINFORCED CONCRETE BARRIER

41" SINGLE FACED

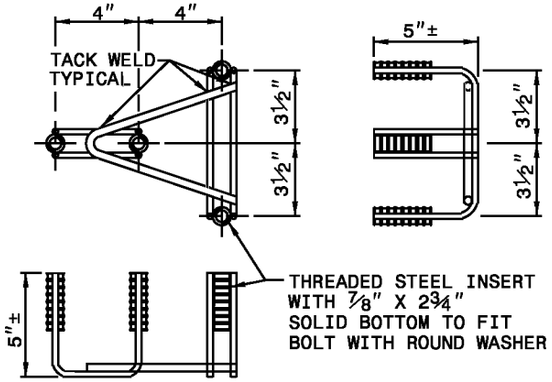

DETAIL A
4 BOLT INSERT ASSEMBLY

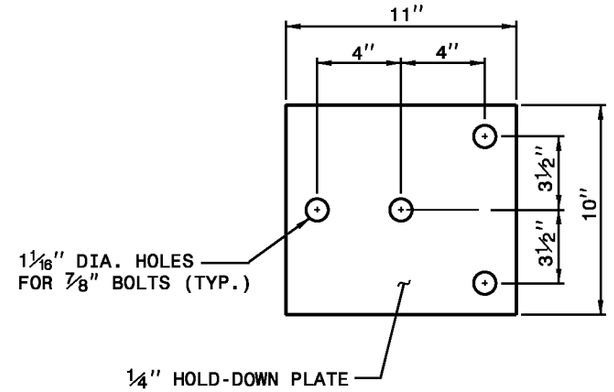

DETAIL B
4 BOLT HOLD DOWN PLATE

NOTES FOR 4 BOLT HOLD DOWN PLATE

USE A ¼" HOLD DOWN PLATE AND 4 - ⅞" DIA. BOLTS WITH NUTS AND WASHERS FOR GUARDRAIL ANCHOR ASSEMBLY.

USE HOLD-DOWN PLATE WHICH CONFORMS TO AASHTO M270 GRADE 36. AFTER FABRICATION, HOT DIP GALVANIZE THE HOLD-DOWN PLATE IN ACCORDANCE WITH AASHTO M111.

AFTER INSTALLATION, BURR THE EXPOSED THREAD OF THE BOLT.

FORM OR DRILL THE 1¼" DIA. HOLES WITH A CORE BIT. IMPACT TOOLS WILL NOT BE PERMITTED. REPAIR ANY CONCRETE DAMAGED BY THIS WORK TO THE SATISFACTION OF THE ENGINEER.

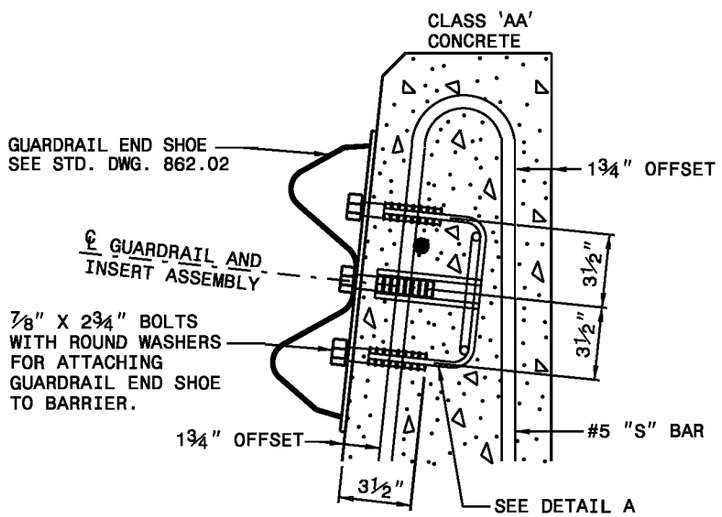

PART SECTION
OF BARRIER

THRU END SHOE SECTION AND
4 BOLT INSERT ASSEMBLY

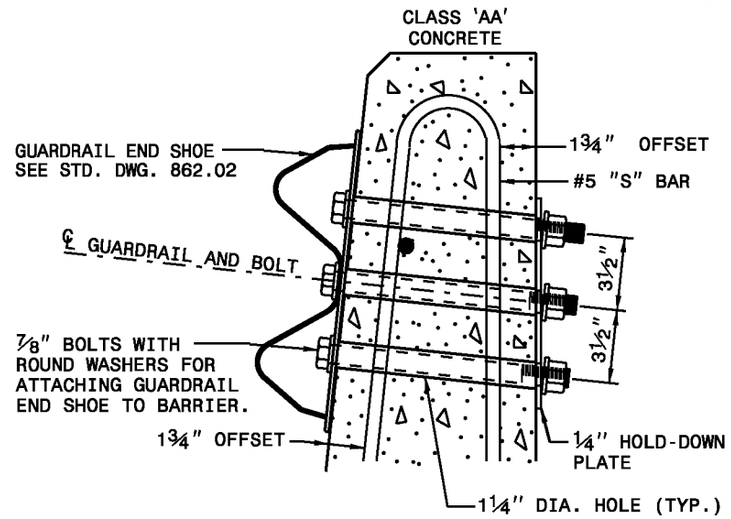

PART SECTION
OF BARRIER

THRU END SHOE SECTION AND
4 BOLT HOLD DOWN PLATE

STATE OF
NORTH CAROLINA
DEPT. OF TRANSPORTATION
DIVISION OF HIGHWAYS
RALEIGH, N.C.

1-12

ENGLISH STANDARD DRAWING FOR

PRECAST REINFORCED CONCRETE BARRIER

41" SINGLE FACED

SHEET 6 OF 8
857.01

STATE OF
NORTH CAROLINA
DEPT. OF TRANSPORTATION
DIVISION OF HIGHWAYS
RALEIGH, N.C.

1-12

ENGLISH STANDARD DRAWING FOR

PRECAST REINFORCED CONCRETE BARRIER

41" SINGLE FACED

SHEET 7 OF 8

857.01

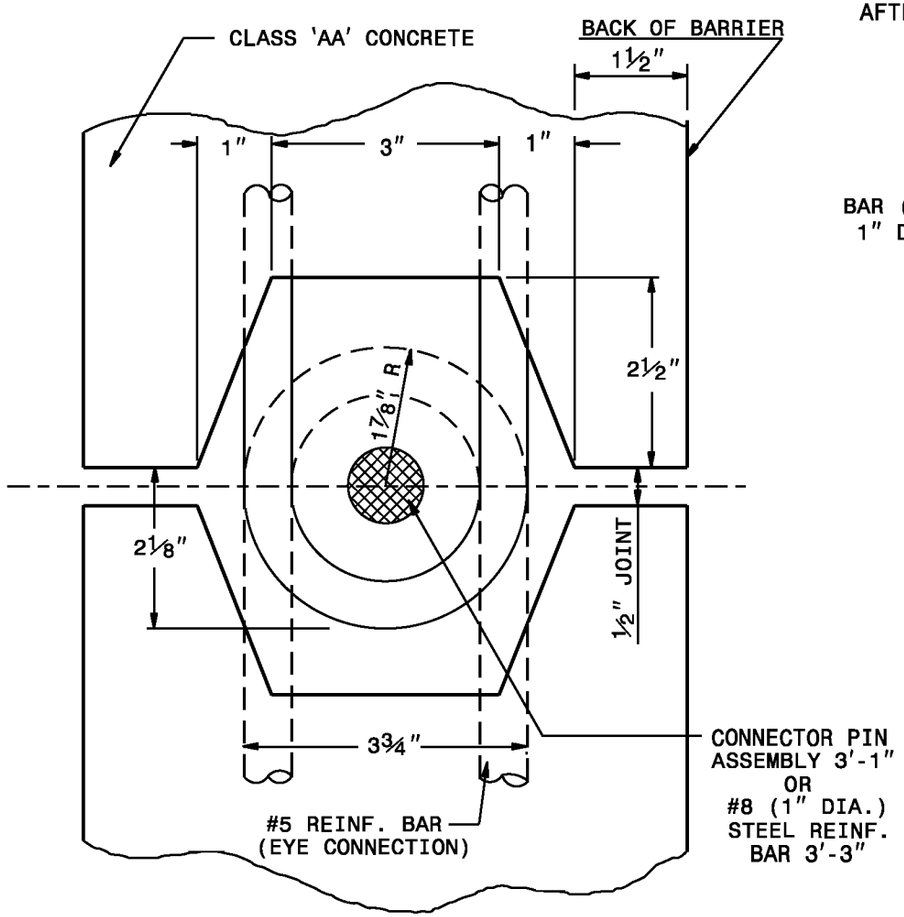

GROOVE END AND
PIN & EYE CONNECTION DETAILS

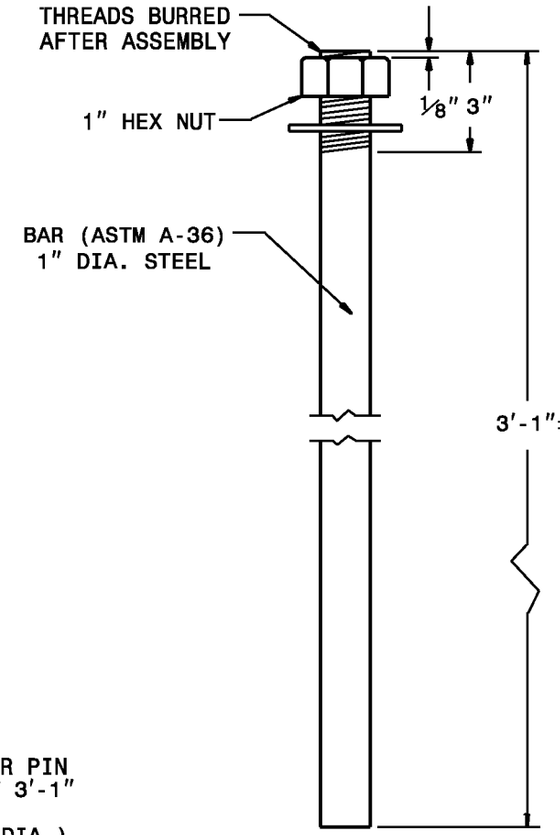

CONNECTOR PIN
ASSEMBLY

OPTION #1
GALVANIZE ALL PARTS IN ACCORDANCE
WITH ASTM A-153 SPEC.

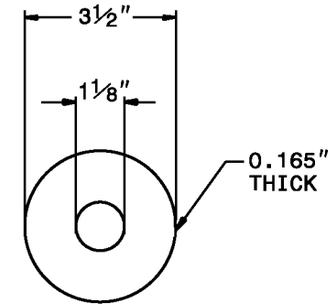

PLAIN GALVANIZED
STEEL WASHER
FOR 1" PIN

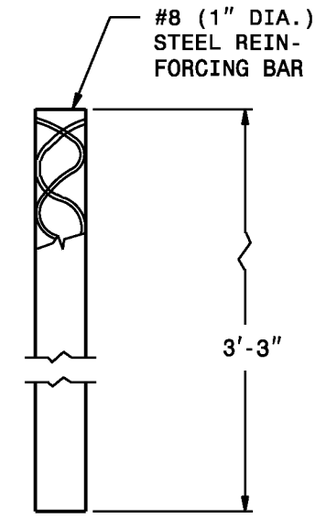

#8 REINFORCING
STEEL BAR
CONNECTOR PIN

OPTION #2
GALVANIZE ALL PARTS IN ACCORDANCE
WITH ASTM A-153 SPEC.

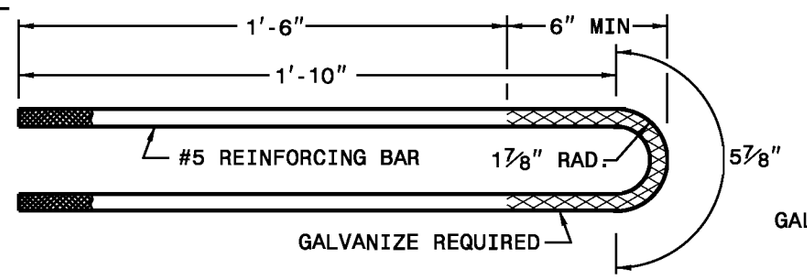

DETAIL OF REINFORCING EYE BAR

STATE OF
NORTH CAROLINA
DEPT. OF TRANSPORTATION
DIVISION OF HIGHWAYS
RALEIGH, N.C.

1-12

ENGLISH STANDARD DRAWING FOR

PRECAST REINFORCED CONCRETE BARRIER

41" SINGLE FACED

SHEET 7 OF 8

857.01

STATE OF
NORTH CAROLINA
DEPT. OF TRANSPORTATION
DIVISION OF HIGHWAYS
RALEIGH, N.C.

1-12

ENGLISH STANDARD DRAWING FOR

PRECAST REINFORCED CONCRETE BARRIER

41" SINGLE FACED

SHEET 8 OF 8

857.01

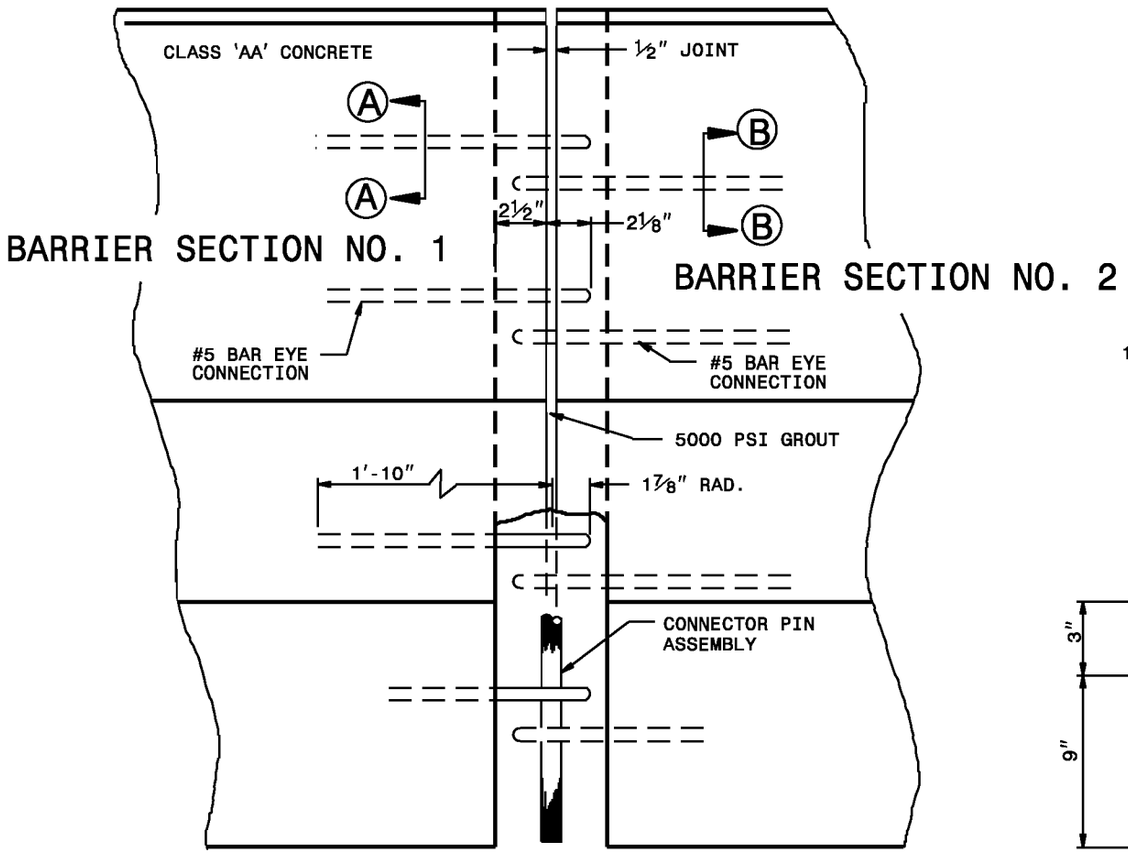

NOTE: SEE SHEET 7 FOR DETAILS OF CONNECTOR PIN ASSEMBLIES.

JOINT VIEW ELEVATION

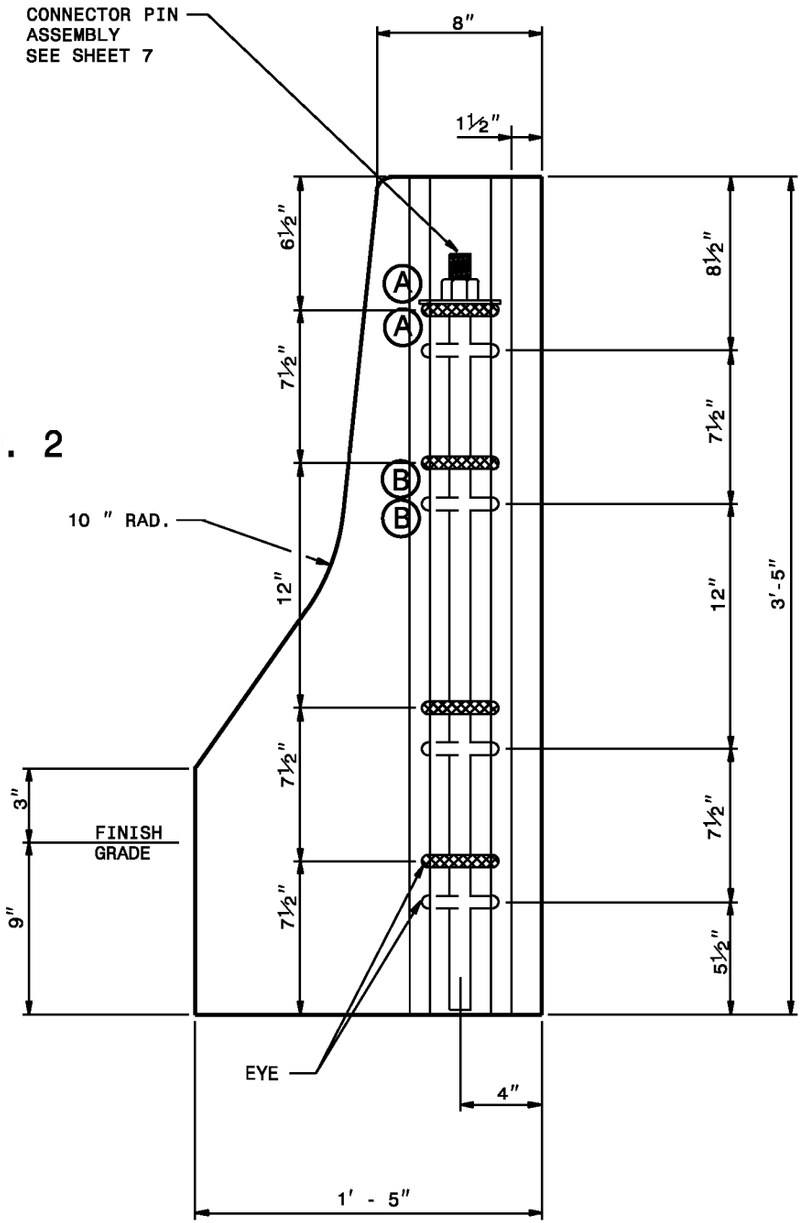

END VIEW

STATE OF
NORTH CAROLINA
DEPT. OF TRANSPORTATION
DIVISION OF HIGHWAYS
RALEIGH, N.C.

1-12

ENGLISH STANDARD DRAWING FOR

PRECAST REINFORCED CONCRETE BARRIER

41" SINGLE FACED

SHEET 8 OF 8

857.01

STATE OF
NORTH CAROLINA
DEPT. OF TRANSPORTATION
DIVISION OF HIGHWAYS
RALEIGH, N.C.

1-12

ENGLISH STANDARD DRAWING FOR

GUARDRAIL PLACEMENT

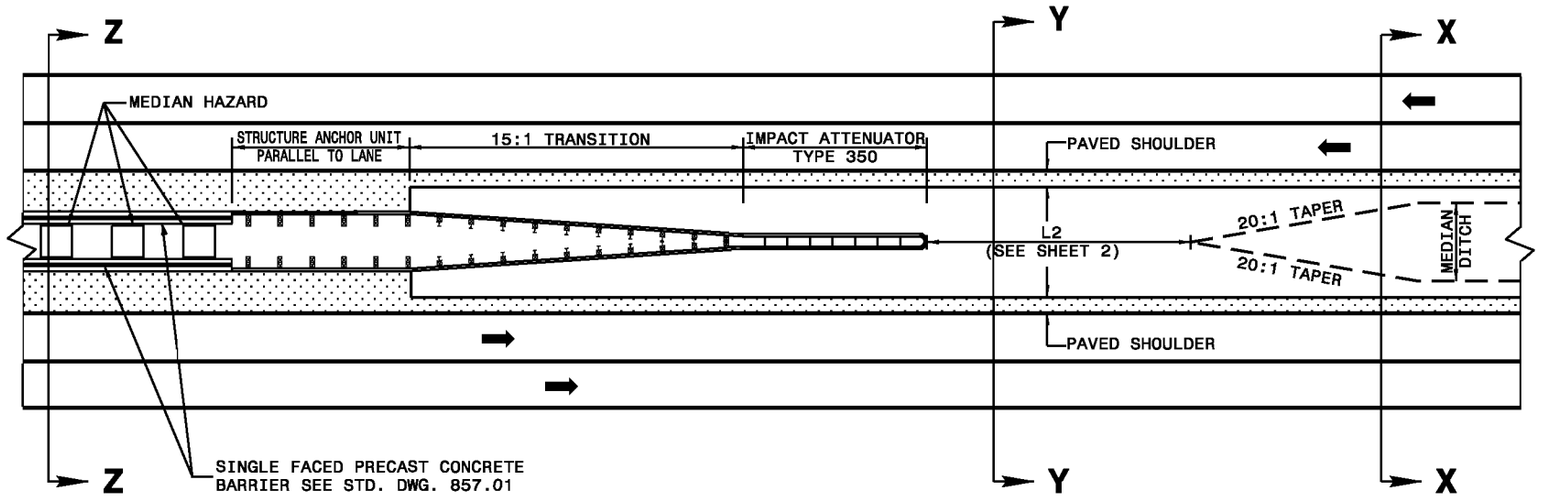

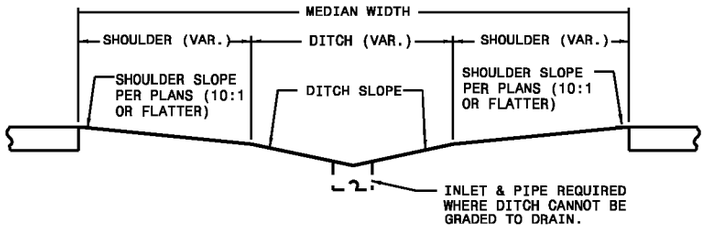

SECT. XX

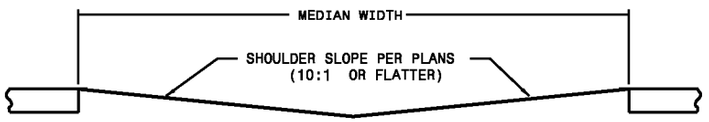

SECT. YY

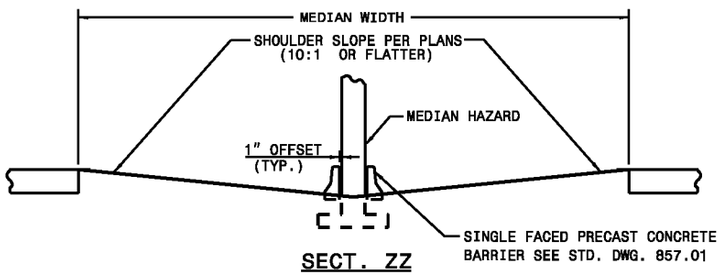

SECT. ZZ

DETAIL OF MEDIAN TREATMENT AT UNDERPASS

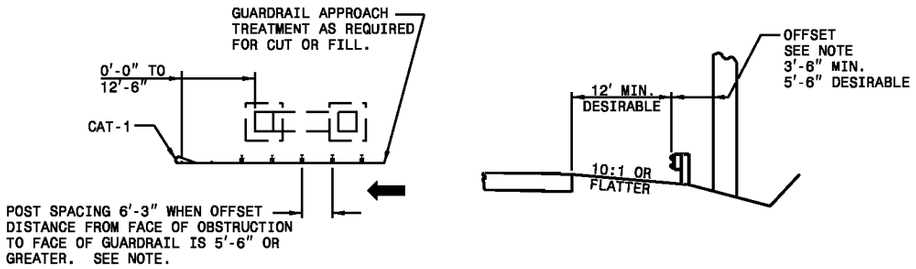

NOTE: WHEN OFFSET DISTANCE FROM FACE OF OBSTRUCTION TO FACE OF GUARDRAIL IS BETWEEN 3'-6" AND 5'-6", BEGIN 3'-1½" POST SPACING AT A POINT 25' BEFORE REACHING THE OBSTRUCTION AND CARRY THROUGHOUT ITS LENGTH. IF THE OFFSET IS LESS THAN 3'-6" USE CONCRETE BARRIER.

DETAIL OF RIGHT SIDE GUARDRAIL AT UNDERPASS

STATE OF
NORTH CAROLINA
DEPT. OF TRANSPORTATION
DIVISION OF HIGHWAYS
RALEIGH, N.C.

1-12

ENGLISH STANDARD DRAWING FOR

GUARDRAIL PLACEMENT

STATE OF
NORTH CAROLINA
DEPT. OF TRANSPORTATION
DIVISION OF HIGHWAYS
RALEIGH, N.C.

1-12

ENGLISH STANDARD DRAWING FOR
GUARDRAIL PLACEMENT

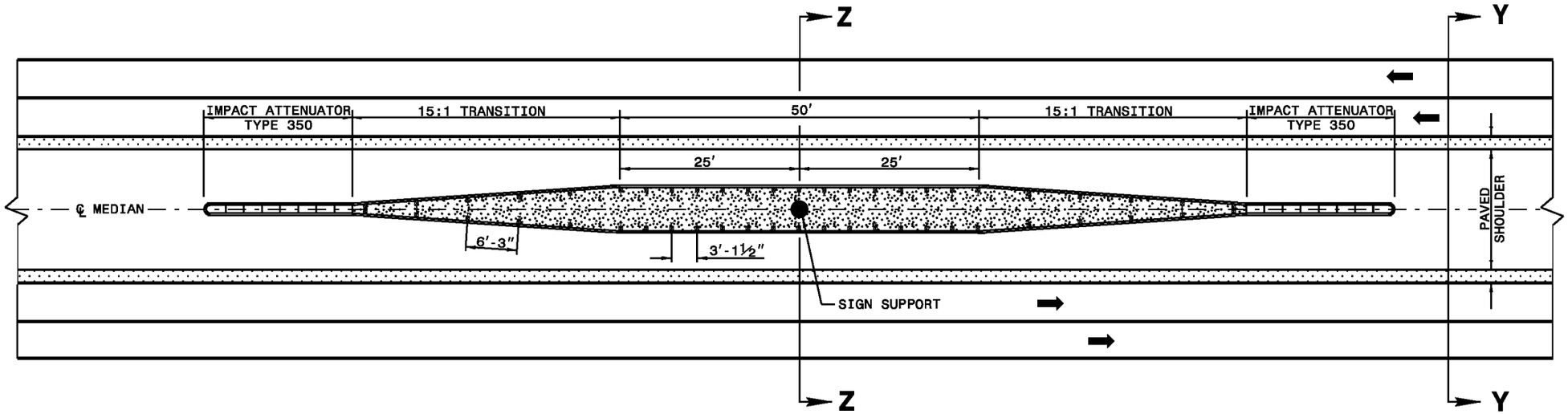

NOTE SPECIAL LAYER OF PAVEMENT .....

USE 3'-1½" POST SPACING ON THE 50' OF GUARDRAIL PARALLEL TO LANES AND 6'-3" POST SPACING ON 15:1 TRANSITION SECTIONS.

GRADE MEDIAN IN THE VICINITY OF THE SIGN SUPPORT AS ILLUSTRATED IN THE ROADWAY STANDARD DRAWINGS (STARDARD 862.01 SHEET 1 OF 11).

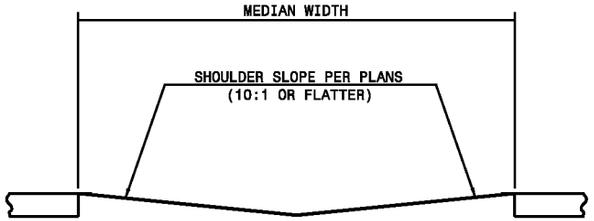

SECT. YY

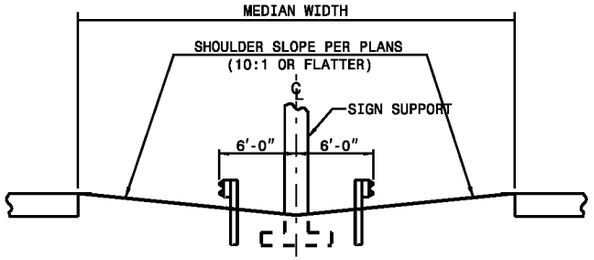

SECT. ZZ

DETAIL OF GUARDRAIL AT MEDIAN SIGN SUPPORT

SHEET 2 OF 12

862.01

STATE OF
NORTH CAROLINA
DEPT. OF TRANSPORTATION
DIVISION OF HIGHWAYS
RALEIGH, N.C.

1-12

ENGLISH STANDARD DRAWING FOR
GUARDRAIL PLACEMENT

SHEET 2 OF 12

862.01

STATE OF NORTH CAROLINA
DEPT. OF TRANSPORTATION
DIVISION OF HIGHWAYS
RALEIGH, N.C.

1-12

ENGLISH STANDARD DRAWING FOR
GUARDRAIL PLACEMENT

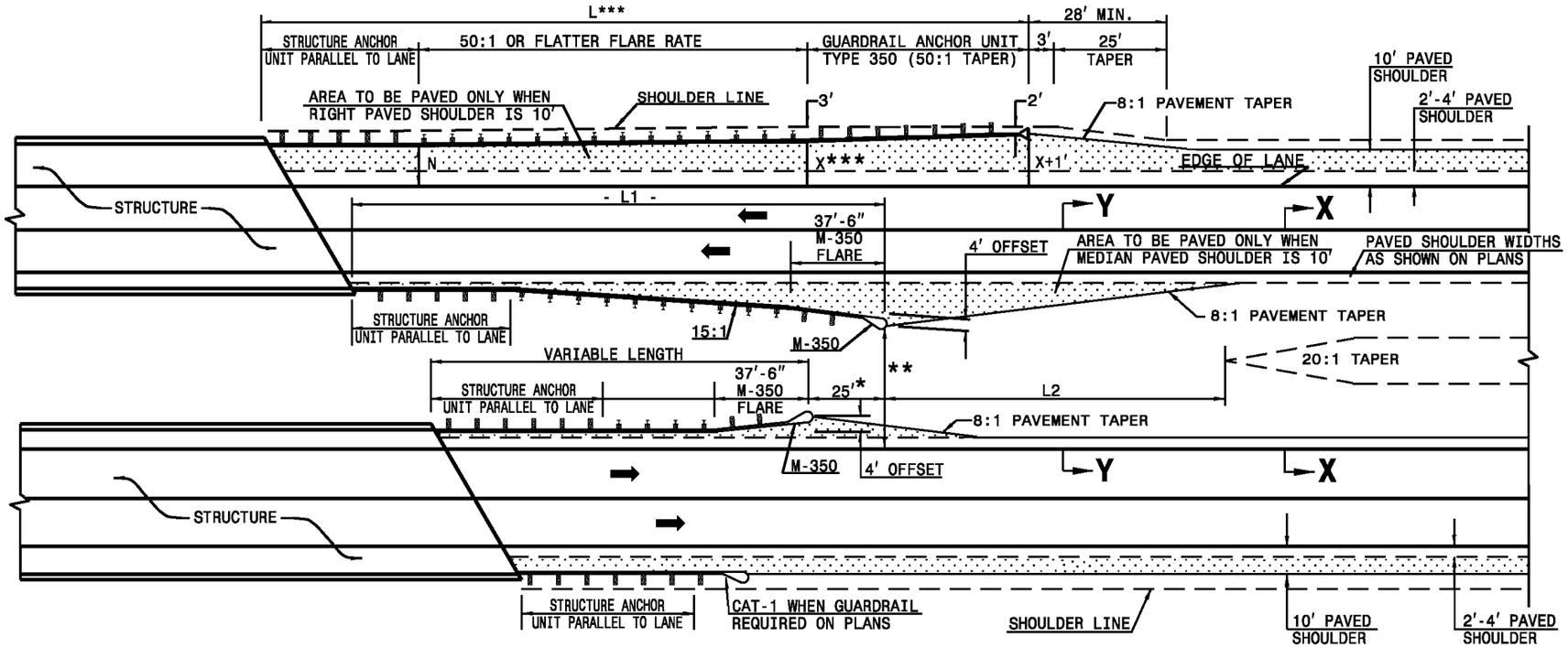

DIMENSIONS FOR LENGTH OF GUARDRAIL APPROACHING DUAL LANE BRIDGES							
MEDIAN WIDTH	-L-***			-L1-			-L2-
	70 MPH	60 MPH	50 MPH	70 MPH	60 MPH	50 MPH	DIM.
30'	300.0'	250.0'	150.0'	187.5'	162.5'	137.5'	80.0'
36'	300.0'	250.0'	150.0'	212.5'	187.5'	137.5'	60.0'
40' & ABOVE	300.0'	250.0'	150.0'	212.5'	187.5'	137.5'	40.0'

NOTES: * MINOR VARIATION TO THE 25'-0" DIMENSION IS PERMISSIBLE TO ACCOMODATE THE 12'-6" IN GUARDRAIL LENGTHS.

** NO GUARDRAIL IS REQUIRED ON THE TRAILING END WHEN THIS DISTANCE EXCEEDS CLEAR ROADSIDE RECOVERY AREA FOR THE APPROPRIATE DESIGN SPEED.

*** BASED ON "X" OF 12'
USE FLARE RATE AS THE CONTROL IF THE "X" DISTANCE IS NOT OBTAINED. ("X" IS BASED ON SHOULDER WIDTHS IN THE HIGHWAY DESIGN BRANCH MANUAL, PART 1, 1-4B, F1A).

"N"= DISTANCE FROM EDGE OF LANE TO FACE OF GUARDRAIL WHERE GUARDRAIL IS PARALLEL TO LANE.

THE DESIGN LAYOUT FOR LENGTHS SHOWN ON THIS STANDARD ARE MINIMUM DESIGN LENGTHS.

SEE SHEET 1 OF 12 FOR SECTIONS XX, YY

SEE STD. 862.03 FOR STRUCTURE ANCHOR UNITS

DETAIL OF GUARDRAIL APPROACHING DUAL LANE BRIDGES

STATE OF NORTH CAROLINA
DEPT. OF TRANSPORTATION
DIVISION OF HIGHWAYS
RALEIGH, N.C.

1-12

ENGLISH STANDARD DRAWING FOR
GUARDRAIL PLACEMENT

SHEET 3 OF 12
862.01

STATE OF
NORTH CAROLINA
DEPT. OF TRANSPORTATION
DIVISION OF HIGHWAYS
RALEIGH, N.C.

1-12

ENGLISH STANDARD DRAWING FOR
GUARDRAIL PLACEMENT

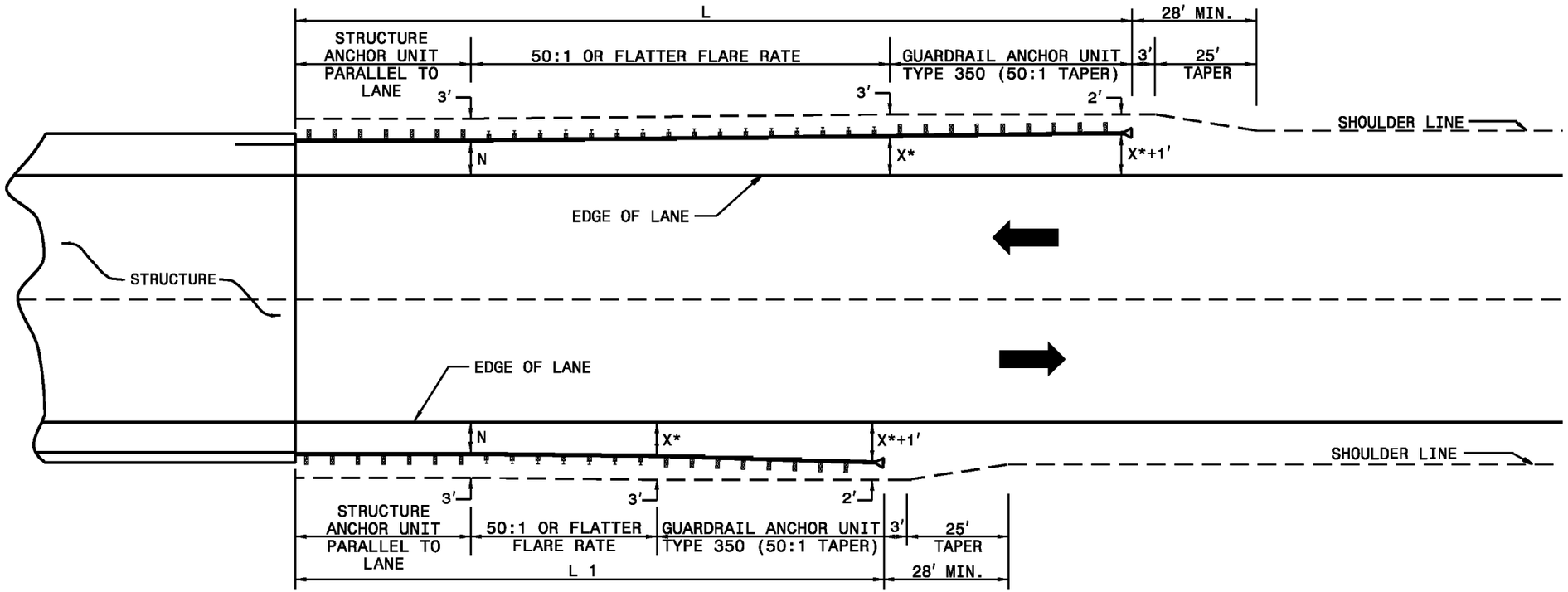

* USE FLARE RATE AS THE CONTROL IF THE "X" DISTANCE IS NOT OBTAINED. ("X" IS BASED ON SHOULDER WIDTHS IN THE HIGHWAY DESIGN BRANCH MANUAL, PART 1, 1-4B, F1).

"N"= DISTANCE FROM EDGE OF LANE TO FACE OF GUARDRAIL WHERE GUARDRAIL IS PARALLEL TO LANE.

SEE STD. 862.03 FOR STRUCTURE ANCHOR UNITS

GUARDRAIL INSTALLATION AT BRIDGE APPROACHES FOR TWO-LANE, TWO-WAY TRAFFIC

DESIGN SPEED (MPH)	"L" APPROACH LENGTH (FT.)				"L1" TRAILING LENGTH (FT.)			
	DESIGN YEAR ADT		CURRENT YEAR ADT		DESIGN YEAR ADT		CURRENT YEAR ADT	
	OVER 2000	1001-2000	400-1000	UNDER 400	OVER 2000	1001-2000	400-1000	UNDER 400
70	362.5'	362.5'	350.0'	287.5'	187.5'	187.5'	175.0'	75.0'
60	300.0'	287.5	275.0'	225.0'	137.5'	137.5'	100.0'	75.0'
50	212.5'	212.5'	200.0'	162.5'	87.5'	75.0'	75.0'	75.0'
40	175.0'	150.0'	137.5'	112.5'	75.0'	75.0'	75.0'	75.0'
X *	8'	6'	4'	4'	8'	6'	4'	4'

LENGTHS AND OFFSETS FOR PROPOSED GUARDRAIL AT TWO LANE - TWO WAY LOCATIONS

STATE OF
NORTH CAROLINA
DEPT. OF TRANSPORTATION
DIVISION OF HIGHWAYS
RALEIGH, N.C.

1-12

ENGLISH STANDARD DRAWING FOR
GUARDRAIL PLACEMENT

SHEET 4 OF 12
862.01

STATE OF NORTH CAROLINA
DEPT. OF TRANSPORTATION
DIVISION OF HIGHWAYS
RALEIGH, N.C.

1-12

ENGLISH STANDARD DRAWING FOR
GUARDRAIL PLACEMENT

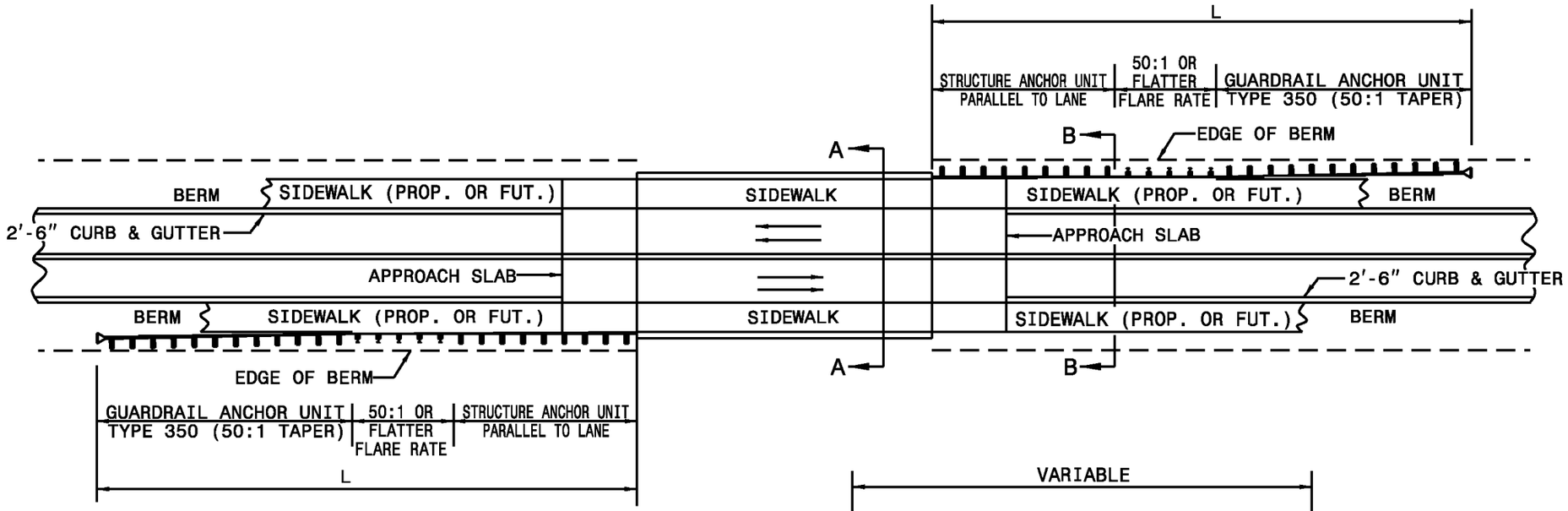

MINIMUM GUARDRAIL LENGTHS "L" REQUIRED AT BRIDGE APPROACHES ON 2'-6" CONCRETE CURB AND GUTTER ROADWAYS	
DESIGN SPEED (MPH)	"L"
40	150'
50	225'

NOTE: "L" VALUES ARE BASED ON NO HAZARDS OTHER THAN END OF BRIDGE BEING PRESENT WITHIN THE CLEAR ZONE.

SEE STD. 862.03 FOR STRUCTURE ANCHOR UNITS.

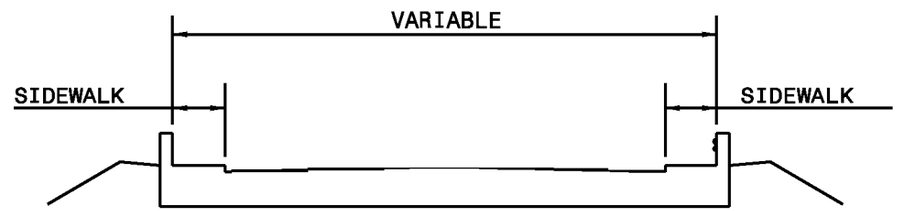

SECTION A-A

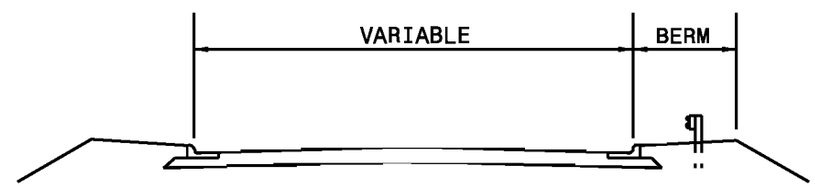

SECTION B-B

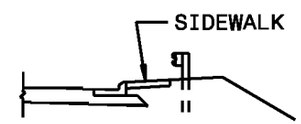

STANDARD GUARDRAIL PLACEMENT AT BRIDGES WITH 2'-6" CONCRETE CURB AND GUTTER

STATE OF NORTH CAROLINA
DEPT. OF TRANSPORTATION
DIVISION OF HIGHWAYS
RALEIGH, N.C.

1-12

ENGLISH STANDARD DRAWING FOR
GUARDRAIL PLACEMENT

STATE OF
NORTH CAROLINA
DEPT. OF TRANSPORTATION
DIVISION OF HIGHWAYS
RALEIGH, N.C.

1-12

ENGLISH STANDARD DRAWING FOR

GUARDRAIL PLACEMENT

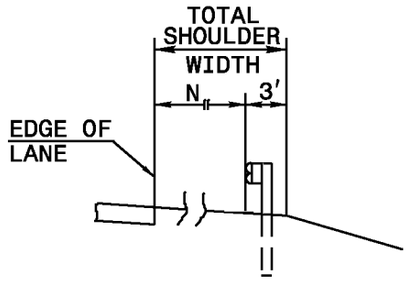

FILL SECTION

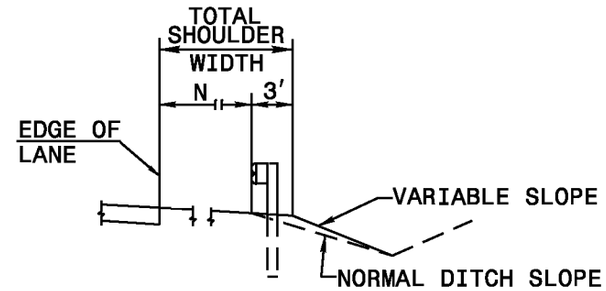

CUT SECTION

"N"= DISTANCE FROM EDGE OF LANE TO FACE OF GUARDRAIL WHERE GUARDRAIL IS PARALLEL TO LANE.

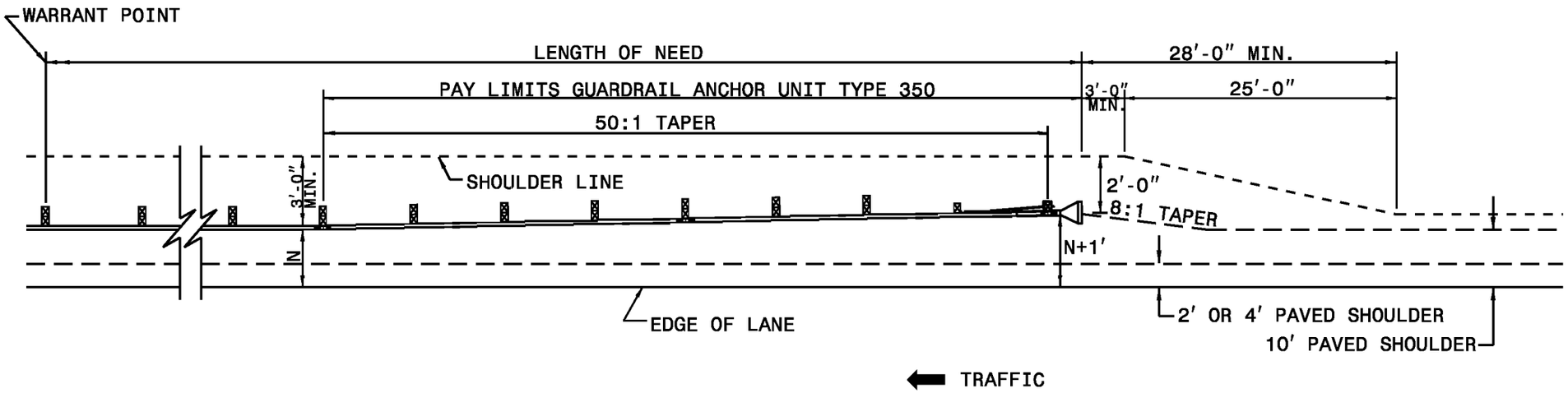

DETAIL OF BEGINNING OF GUARDRAIL IN CUT OR FILL SECTION

SHEET 6 OF 12

862.01

STATE OF
NORTH CAROLINA
DEPT. OF TRANSPORTATION
DIVISION OF HIGHWAYS
RALEIGH, N.C.

1-12

ENGLISH STANDARD DRAWING FOR

GUARDRAIL PLACEMENT

SHEET 6 OF 12

862.01

STATE OF
NORTH CAROLINA
DEPT. OF TRANSPORTATION
DIVISION OF HIGHWAYS
RALEIGH, N.C.

1-12

ENGLISH STANDARD DRAWING FOR
GUARDRAIL PLACEMENT

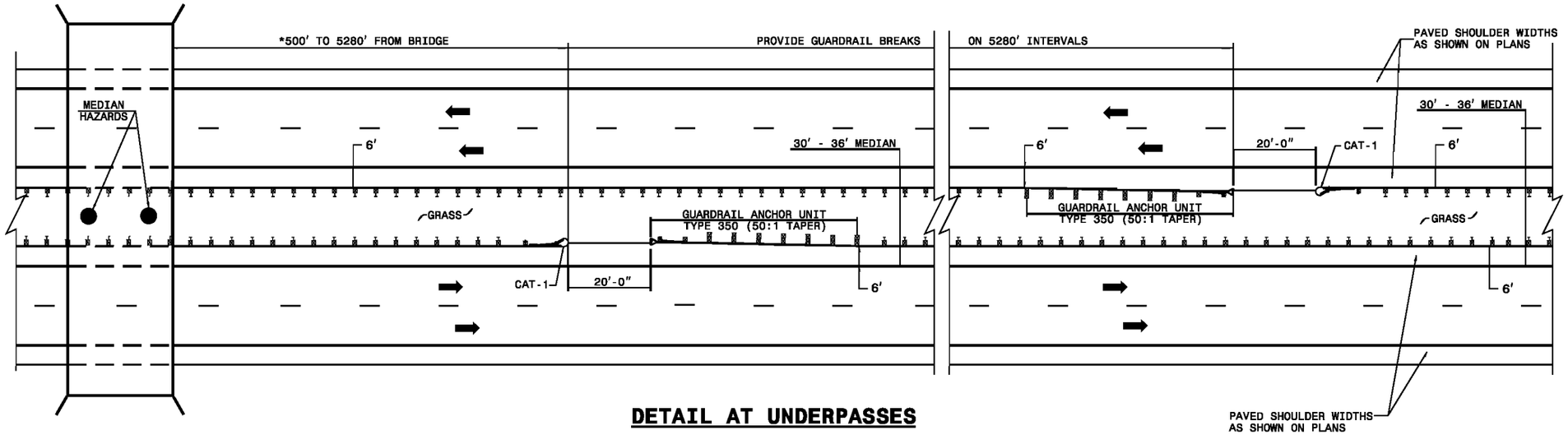

DETAIL AT UNDERPASSES

* GUARDRAIL OPENING MAY BE SPACED AS CLOSE AS 350 FT. FROM STRUCTURE IF NECCESSARY TO ALLOW MOWER ACCESS TO MEDIAN

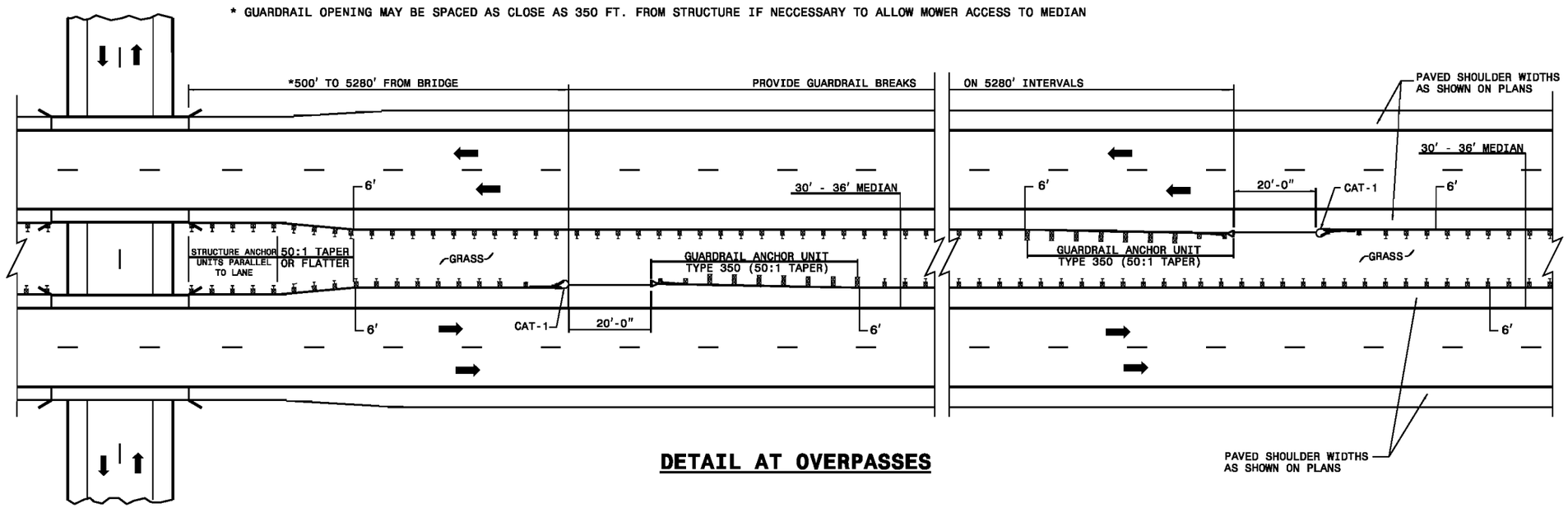

DETAIL AT OVERPASSES

GUARDRAIL BREAK INTERVALS WITH 30' - 36' MEDIANS

SHEET 7 OF 12
862.01

STATE OF
NORTH CAROLINA
DEPT. OF TRANSPORTATION
DIVISION OF HIGHWAYS
RALEIGH, N.C.

1-12

ENGLISH STANDARD DRAWING FOR
GUARDRAIL PLACEMENT

SHEET 7 OF 12
862.01

STATE OF
NORTH CAROLINA
DEPT. OF TRANSPORTATION
DIVISION OF HIGHWAYS
RALEIGH, N.C.

1-12

ENGLISH STANDARD DRAWING FOR
GUARDRAIL PLACEMENT

NOTES:

SHOP CURVED GUARDRAIL IS DEFINED AS HAVING A RADIUS OF 150′ OR LESS.

WHEN RADIUS IS LESS THAN 20′ REFER TO SHEET 8.

WHENEVER SHOP CURVED GUARDRAIL IS USED AS AN ANCHOR AND THE RADIUS IS FROM 20′ TO 75′, USE A MINIMUM LENGTH OF 50′ OF SHOP CURVED GUARDRAIL AND FLARE WITH AN AT-1 ANCHOR UNIT. REFER TO DETAIL 1.

WHENEVER SHOP CURVED GUARDRAIL RADIUS IS MORE THAN 75′, REFER TO DETAIL 2.

MAINTAIN CLEAR SIGHT DISTANCE.

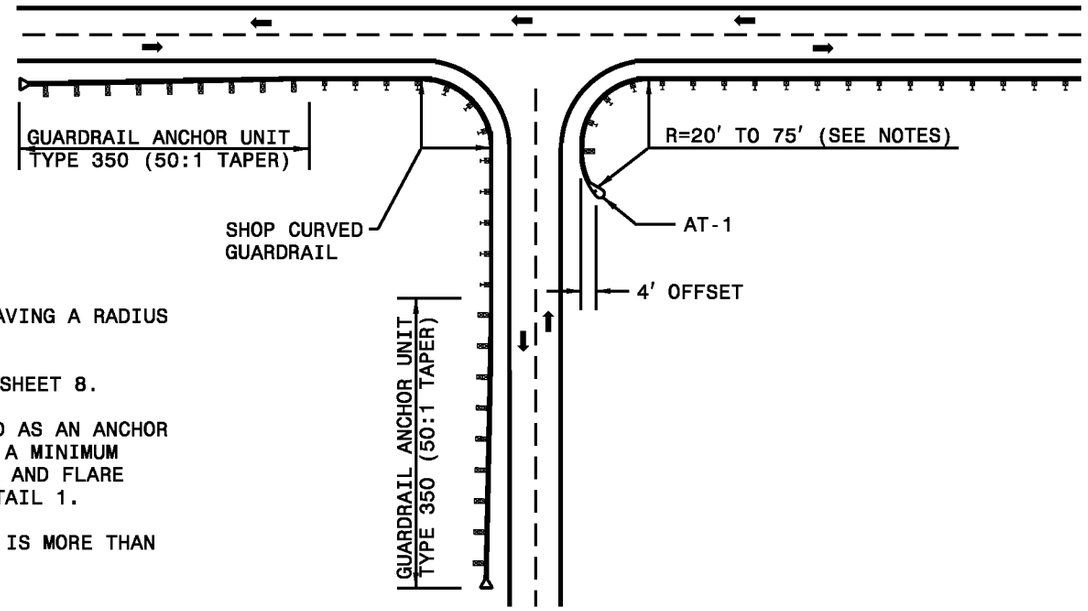

DETAIL-1

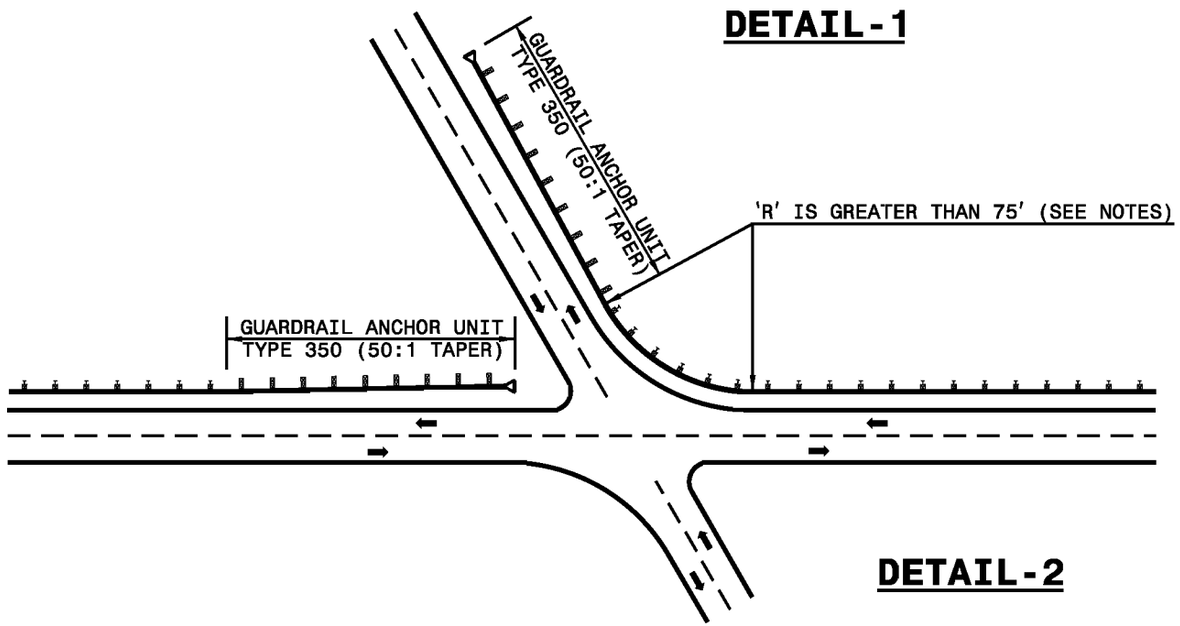

DETAIL-2

GUARDRAIL TREATMENT AT INTERSECTIONS

SHEET 8 OF 12
862.01

STATE OF
NORTH CAROLINA
DEPT. OF TRANSPORTATION
DIVISION OF HIGHWAYS
RALEIGH, N.C.

1-12

ENGLISH STANDARD DRAWING FOR
GUARDRAIL PLACEMENT

SHEET 8 OF 12
862.01

STATE OF
NORTH CAROLINA
DEPT. OF TRANSPORTATION
DIVISION OF HIGHWAYS
RALEIGH, N.C.

1-12

ENGLISH STANDARD DRAWING FOR
GUARDRAIL PLACEMENT

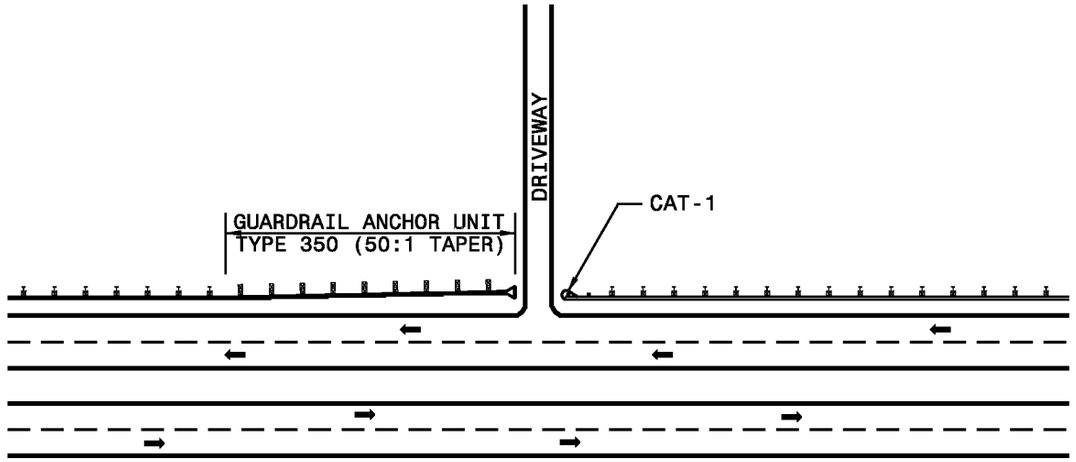

DETAIL-3

DIVIDED HIGHWAY

NOTE: USE DETAIL 3 & 4 WHENEVER 20′ OR LARGER RADIUS CANNOT BE UTILIZED.

MAINTAIN CLEAR SIGHT DISTANCE.

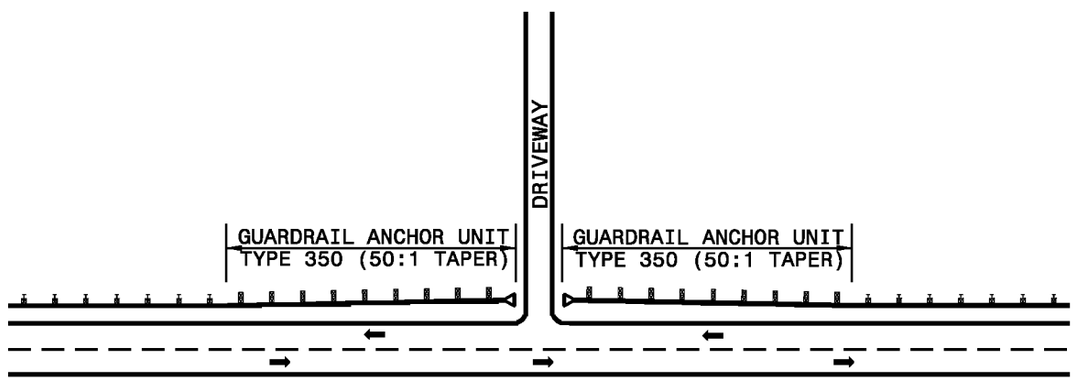

DETAIL-4

UNDIVIDED HIGHWAY

GUARDRAIL TREATMENT AT DRIVEWAYS

STATE OF
NORTH CAROLINA
DEPT. OF TRANSPORTATION
DIVISION OF HIGHWAYS
RALEIGH, N.C.

1-12

ENGLISH STANDARD DRAWING FOR
GUARDRAIL PLACEMENT

SHEET 9 OF 12
862.01

STATE OF NORTH CAROLINA
DEPT. OF TRANSPORTATION
DIVISION OF HIGHWAYS
RALEIGH, N.C.

1-12

ENGLISH STANDARD DRAWING FOR
GUARDRAIL PLACEMENT
25'-0" CLEAR SPAN
(MEETING NCHRP 350 TL-3 CRITERIA)

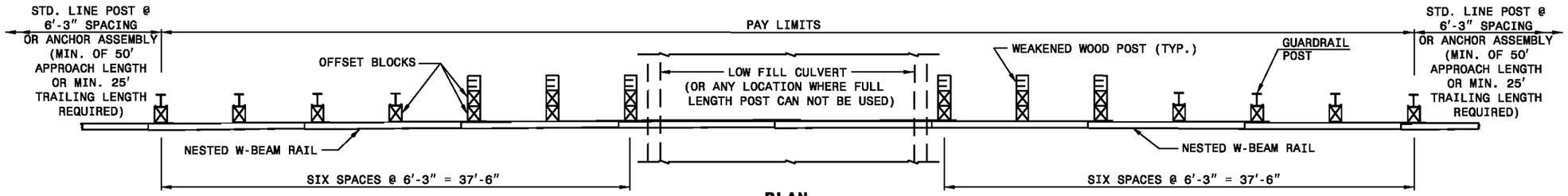

PLAN

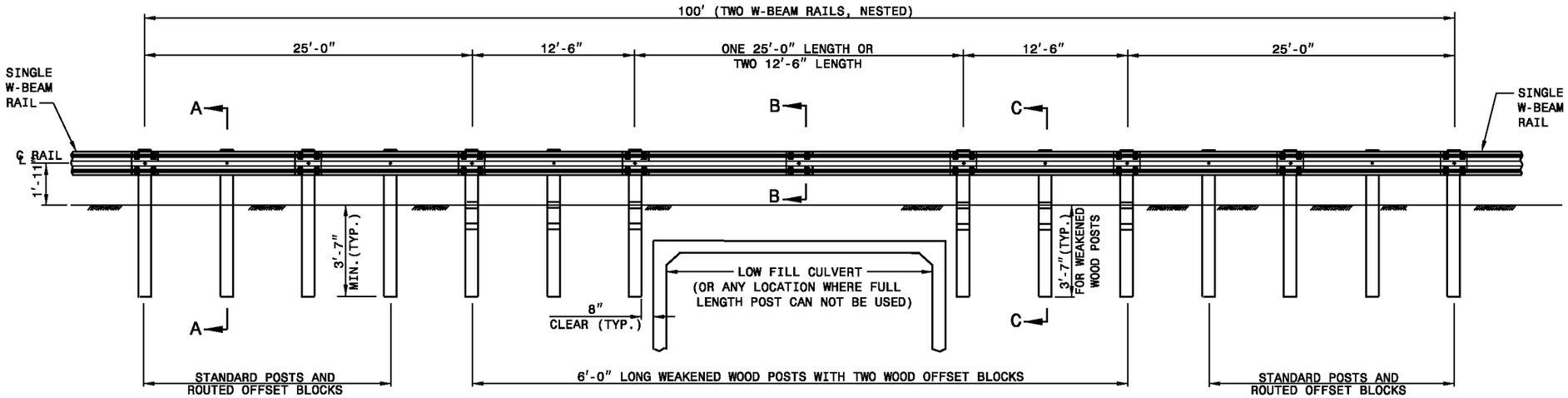

ELEVATION
25'-0" GUARDRAIL SPAN

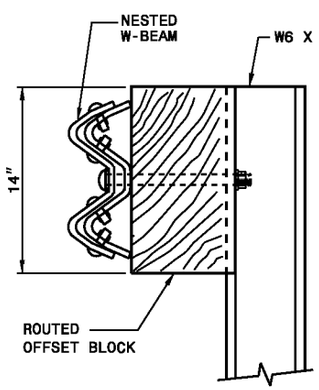

SECTION A-A

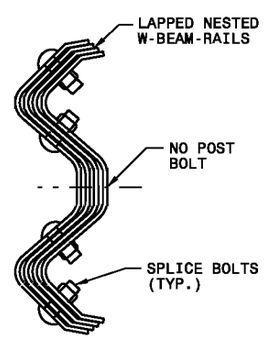

RAIL SPLICE
SECTION B-B

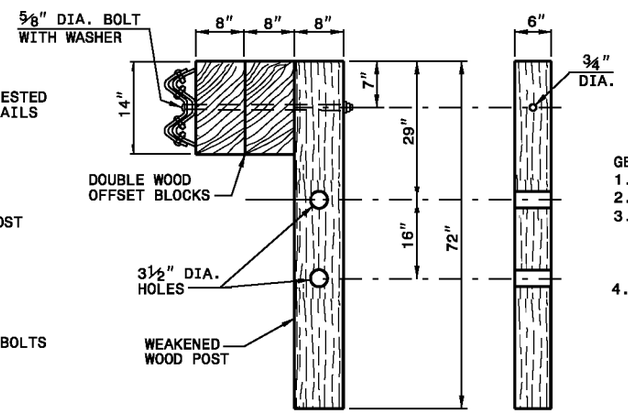

SECTION C-C **FRONT**
WEAKENED WOOD POST

GENERAL NOTES:
1. LAP RAIL IN THE DIRECTION OF TRAFFIC FLOW.
2. SEE ROADWAY PLANS FOR LOCATIONS AND CONTINUATION OF RAIL OR END SECTIONS.
3. 25'-0" SPAN: POSTS MAY BE ELIMINATED SUCH THAT A MAXIMUM OF ONE RAIL SPLICE IS LOCATED WITHIN THE UNSUPPORTED LENGTH. A 25'-0" LENGTH OF NESTED W-BEAM RAIL MAY BE USED TO ELIMINATE A SPLICE WITHIN THE 25'-0" CLEAR SPAN.
4. MINIMUM DISTANCE OF 5 FEET BEHIND THE GUARDRAIL SHOULD BE CLEAR OF ANY FIXED-OBJECT HAZARDS THAT COULD SNAG AN IMPACTING VEHICLE.

STATE OF NORTH CAROLINA
DEPT. OF TRANSPORTATION
DIVISION OF HIGHWAYS
RALEIGH, N.C.

1-12

ENGLISH STANDARD DRAWING FOR
GUARDRAIL PLACEMENT
25'-0" CLEAR SPAN
(MEETING NCHRP 350 TL-3 CRITERIA)

STATE OF
NORTH CAROLINA
DEPT. OF TRANSPORTATION
DIVISION OF HIGHWAYS
RALEIGH, N.C.

1-12

ENGLISH STANDARD DRAWING FOR

GUARDRAIL PLACEMENT

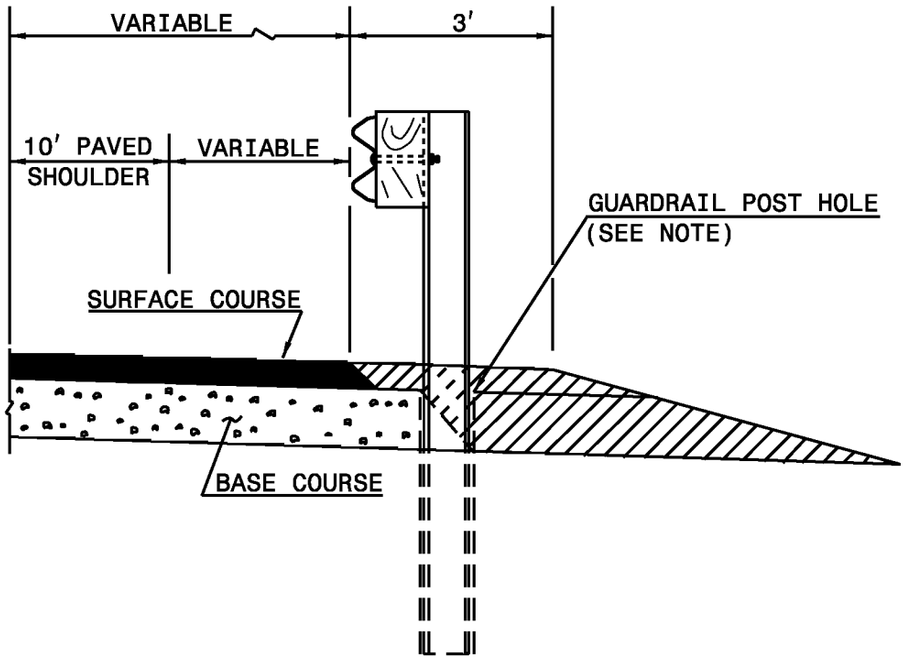

FLEXIBLE PAVED SHOULDER

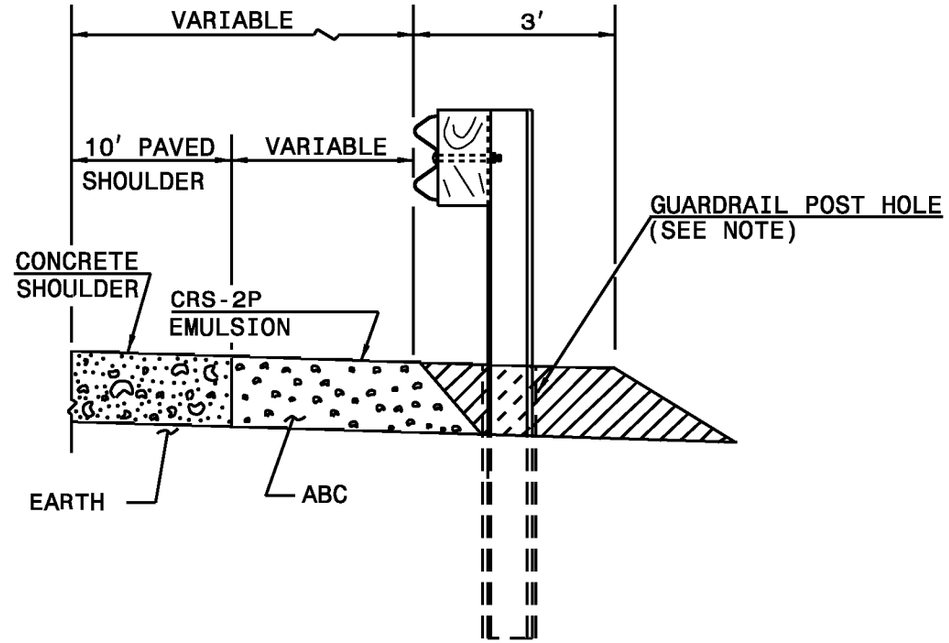

CONCRETE PAVED SHOULDER

EARTH MATERIAL

NOTE:
WHEN WOODEN GUARDRAIL POSTS ARE USED, DRILL HOLES THROUGH EARTH MATERIAL AND BASE COURSE.THE POST MAY THEN BE DRIVEN TO THE PROPER DEPTH. DRILL THE HOLE OF SUFFICIENT SIZE TO ACCOMMODATE THE PARTICULAR POST BEING USED. BACKFILL AND TAMP HOLES USING THE EXCAVATED MATERIAL.

STATE OF
NORTH CAROLINA
DEPT. OF TRANSPORTATION
DIVISION OF HIGHWAYS
RALEIGH, N.C.

1-12

ENGLISH STANDARD DRAWING FOR

GUARDRAIL PLACEMENT

SHEET 11 OF 12
862.01

STATE OF
NORTH CAROLINA
DEPT. OF TRANSPORTATION
DIVISION OF HIGHWAYS
RALEIGH, N.C.

1-12

ENGLISH STANDARD DRAWING FOR

GUARDRAIL PLACEMENT

GUARDRAIL TREATMENT AT CURB AND GUTTER

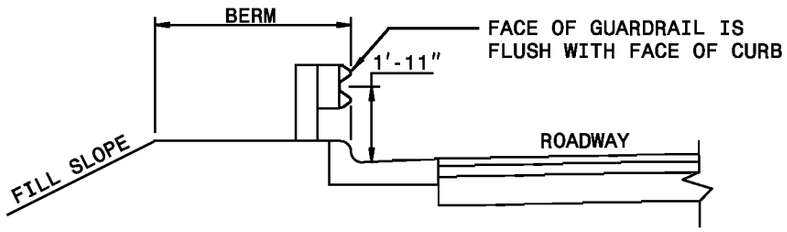

SECTION D-D

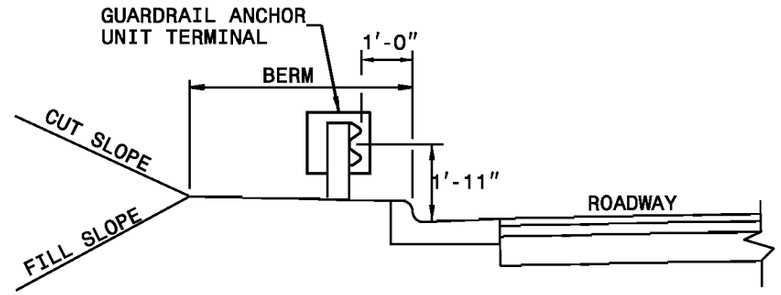

SECTION C-C

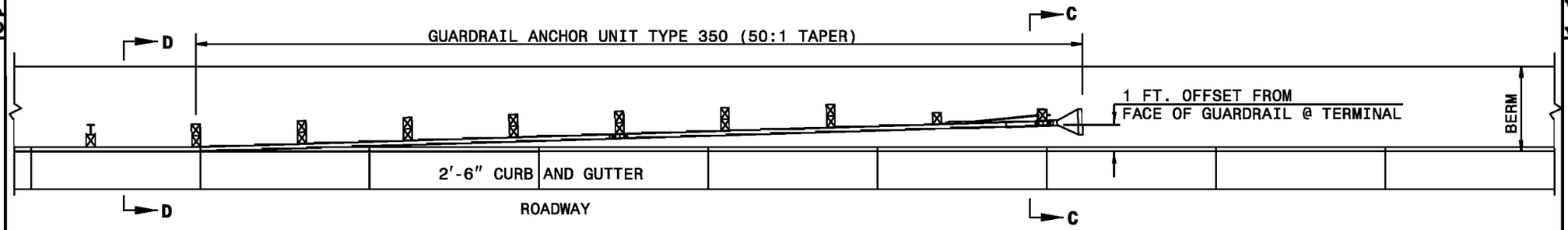

GUARDRAIL AT FACE OF CURB

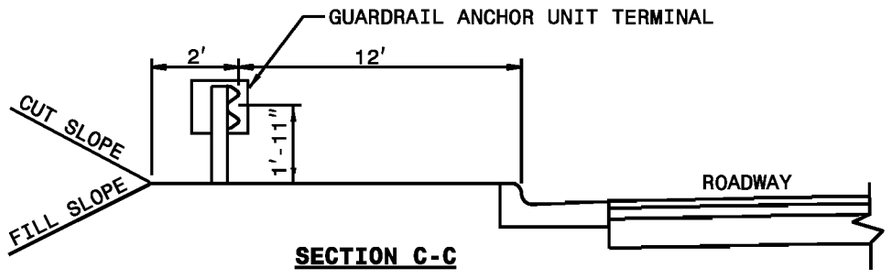

SECTION C-C

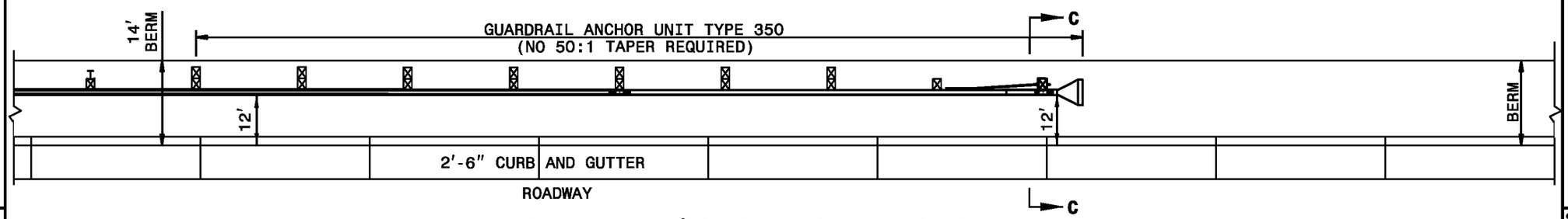

GUARDRAIL 12' OFFSET FROM FACE OF CURB

SHEET 12 OF 12

862.01

STATE OF
NORTH CAROLINA
DEPT. OF TRANSPORTATION
DIVISION OF HIGHWAYS
RALEIGH, N.C.

1-12

ENGLISH STANDARD DRAWING FOR

GUARDRAIL PLACEMENT

GUARDRAIL TREATMENT AT CURB AND GUTTER

SHEET 12 OF 12

862.01

STATE OF
NORTH CAROLINA
DEPT. OF TRANSPORTATION
DIVISION OF HIGHWAYS
RALEIGH, N.C.

1-12

ENGLISH STANDARD DRAWING FOR
GUARDRAIL INSTALLATION

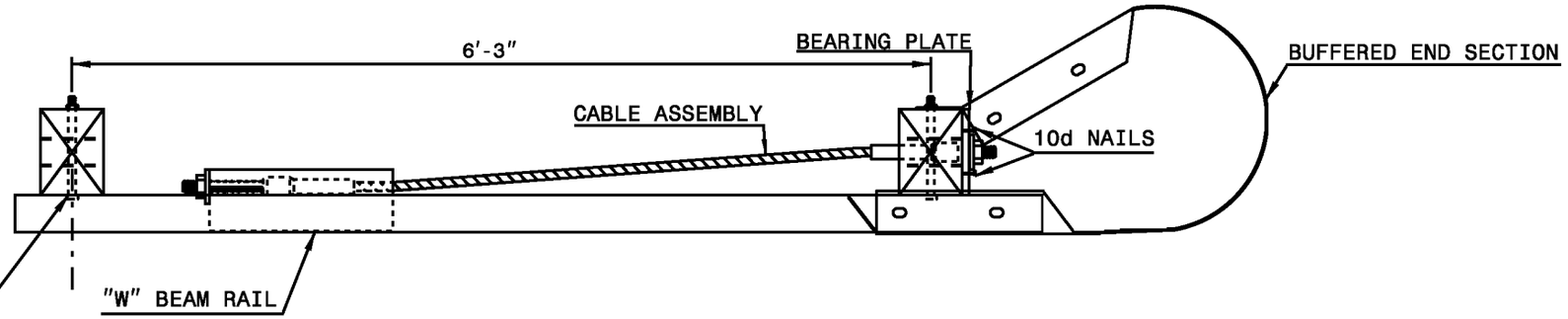

END SECTION ASSEMBLY - PLAN

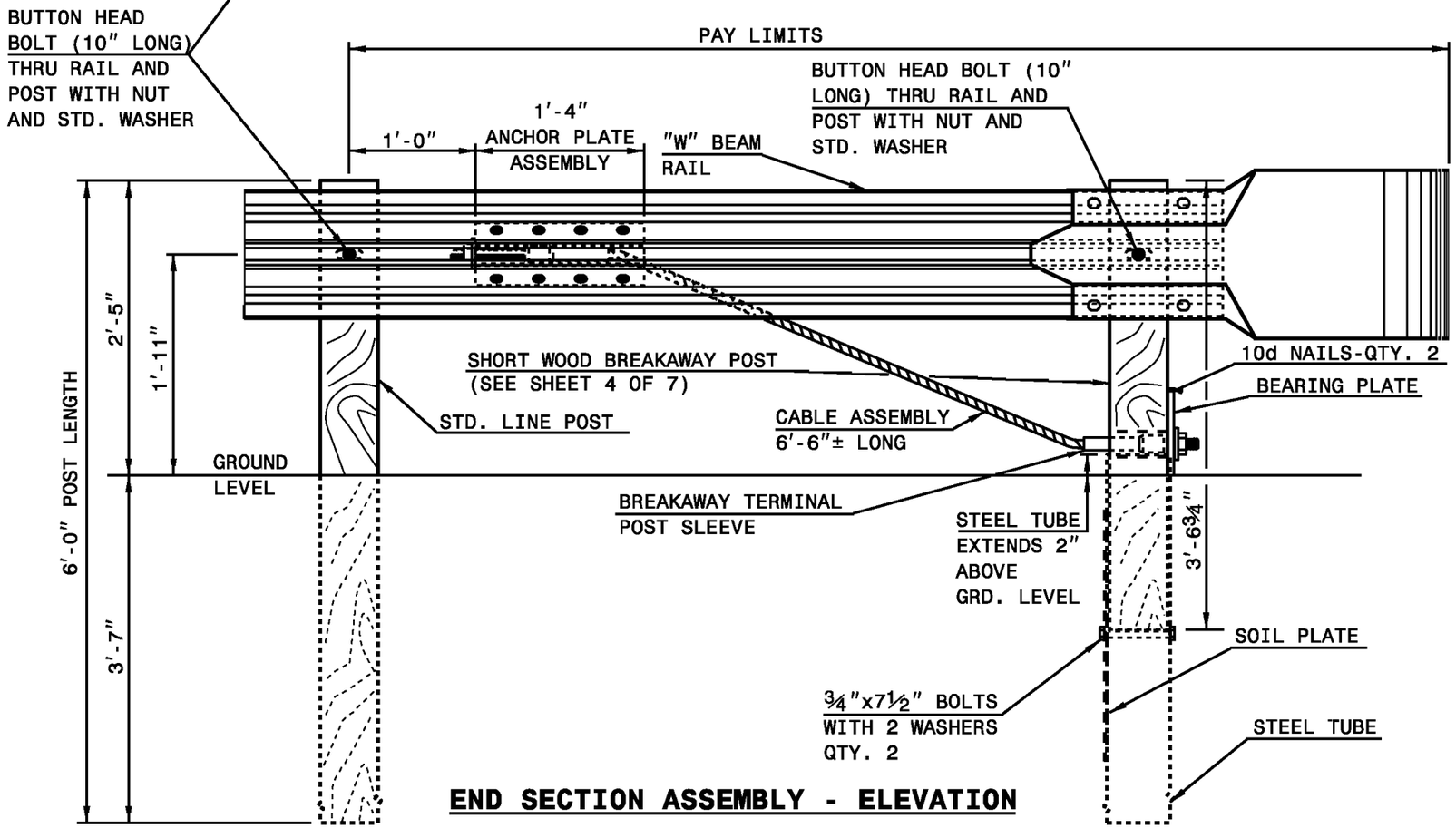

END SECTION ASSEMBLY - ELEVATION

C.A.T.-1 SYSTEM

SHEET 1 OF 7

862.02

STATE OF
NORTH CAROLINA
DEPT. OF TRANSPORTATION
DIVISION OF HIGHWAYS
RALEIGH, N.C.

1-12

ENGLISH STANDARD DRAWING FOR
GUARDRAIL INSTALLATION

SHEET 1 OF 7

862.02

STATE OF
NORTH CAROLINA
DEPT. OF TRANSPORTATION
DIVISION OF HIGHWAYS
RALEIGH, N.C.

1-12

ENGLISH STANDARD DRAWING FOR
GUARDRAIL INSTALLATION

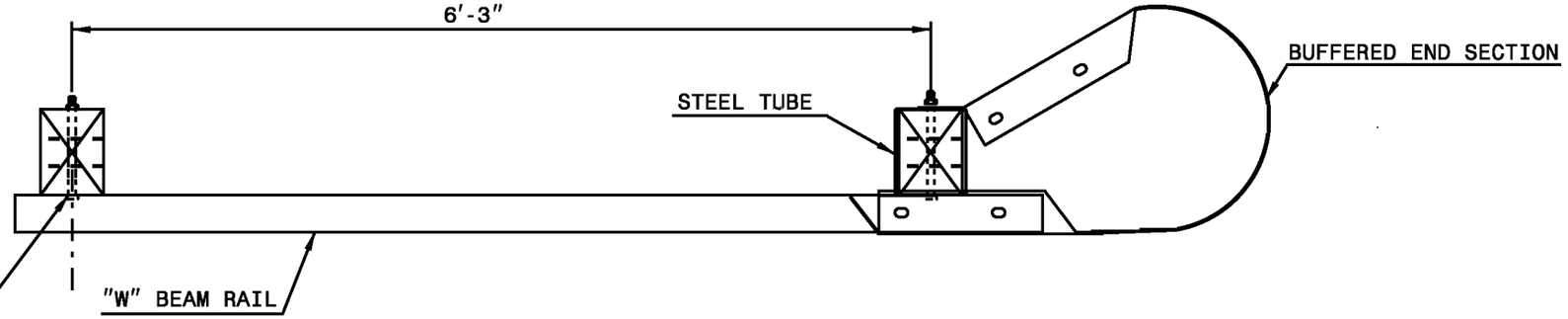

END SECTION ASSEMBLY - PLAN

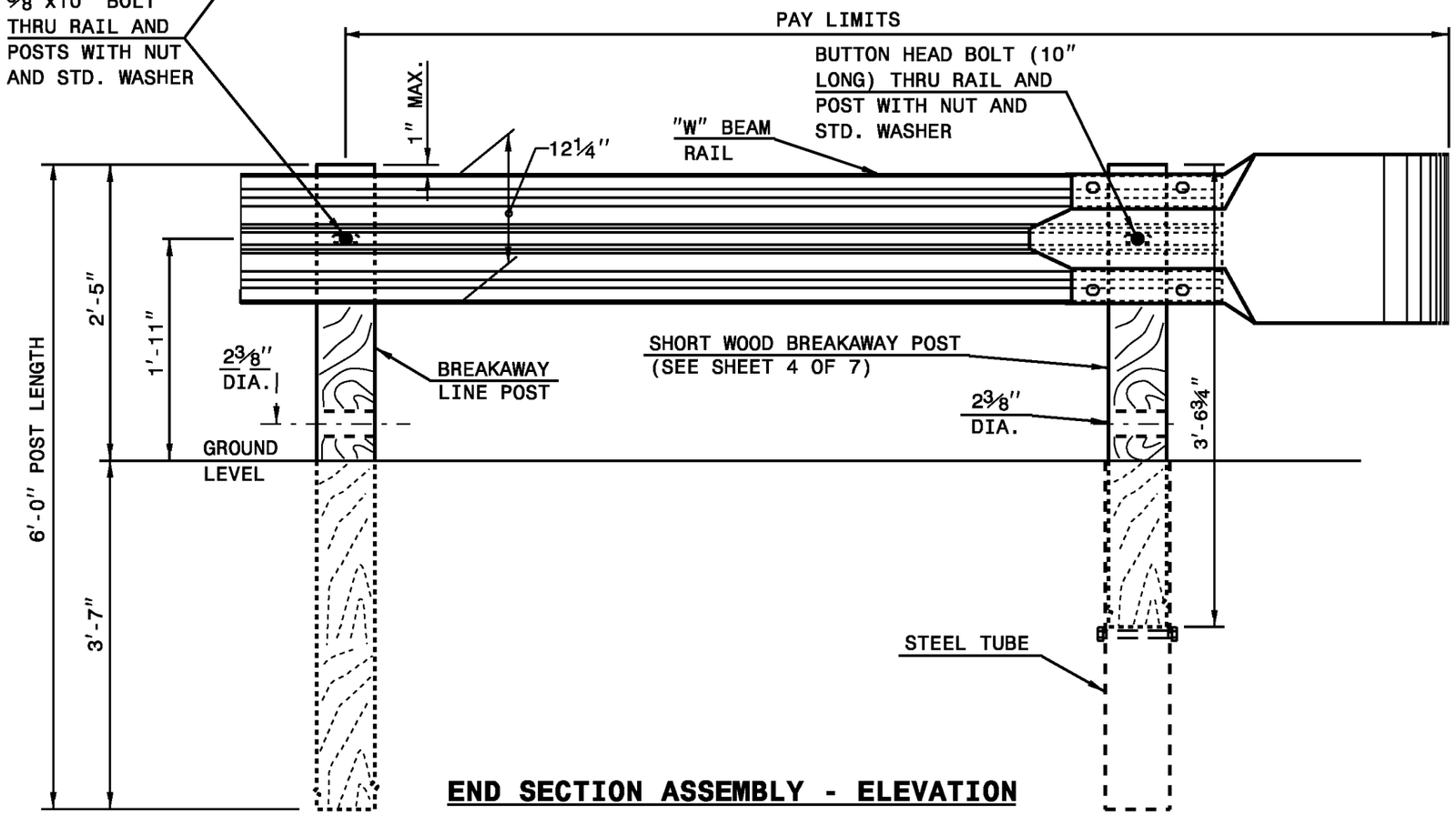

END SECTION ASSEMBLY - ELEVATION

A.T.-1 SYSTEM

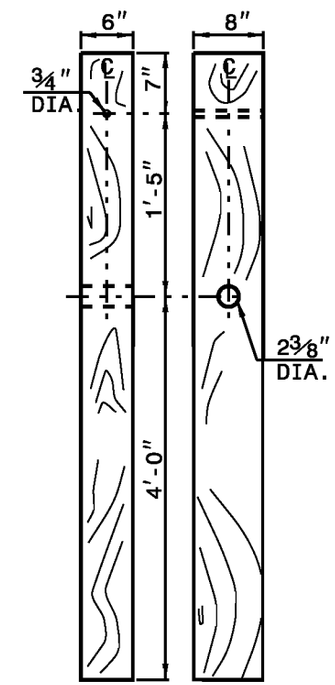

BREAKAWAY LINE POST

STATE OF
NORTH CAROLINA
DEPT. OF TRANSPORTATION
DIVISION OF HIGHWAYS
RALEIGH, N.C.

1-12

ENGLISH STANDARD DRAWING FOR
GUARDRAIL INSTALLATION

SHEET 2 OF 7
862.02

STATE OF
NORTH CAROLINA
DEPT. OF TRANSPORTATION
DIVISION OF HIGHWAYS
RALEIGH, N.C.

1-12

ENGLISH STANDARD DRAWING FOR
GUARDRAIL INSTALLATION

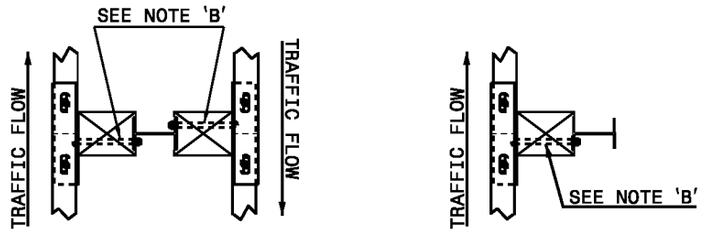

DOUBLE FACE GUARDRAIL

'W6' STEEL POST WITH
ROUTED OFFSET BLOCK

PLAN

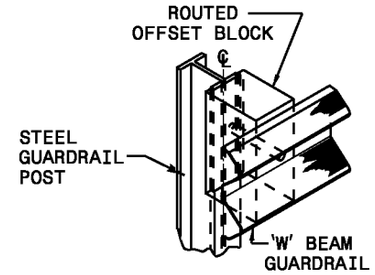

ISOMETRIC VIEW

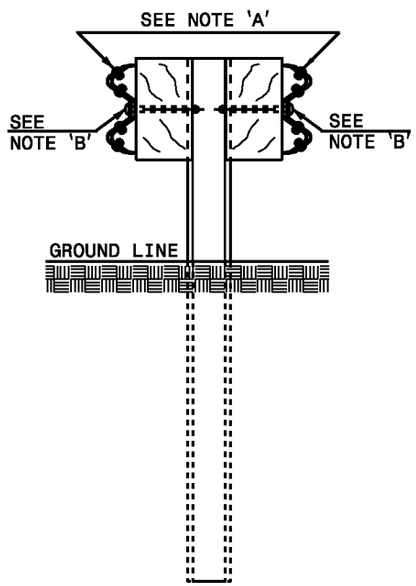

DOUBLE FACE GUARDRAIL

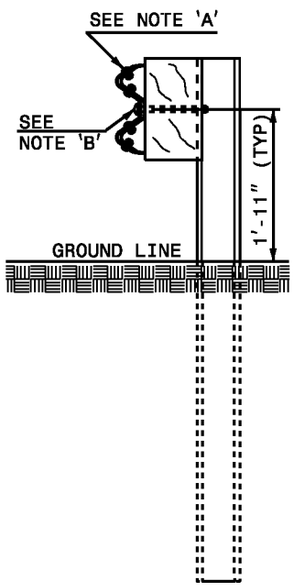

'W6' STEEL POST WITH
ROUTED OFFSET BLOCK

SIDE

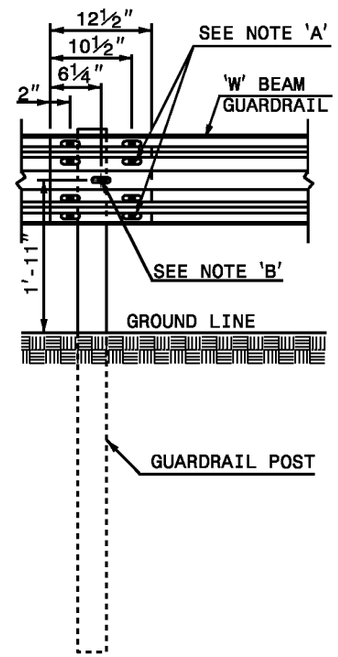

FRONT

NOTES:
A - ⅝" DIA. BUTTON HEAD SPLICE BOLT 1¼" LONG (8 REQ. PER SPLICE JOINT).
B - ⅝" DIA. BUTTON HEAD BOLT 7½"/9" LONG WITH NUT FOR BOLTING 6"/8" ROUTED OFFSET BLOCK TO STEEL POSTS.
C - FIELD PUNCHING OF HOLES INTO GUARDRAIL AS DIRECTED BY THE ENGINEER.

TYPICAL GUARDRAIL AND GUARDRAIL POST ALTERNATIVES

SHEET 3 OF 7
862.02

1-12
STATE OF
NORTH CAROLINA
DEPT. OF TRANSPORTATION
DIVISION OF HIGHWAYS
RALEIGH, N.C.

ENGLISH STANDARD DRAWING FOR
GUARDRAIL INSTALLATION

SHEET 3 OF 7
862.02

STATE OF
NORTH CAROLINA
DEPT. OF TRANSPORTATION
DIVISION OF HIGHWAYS
RALEIGH, N.C.

1-12

ENGLISH STANDARD DRAWING FOR
GUARDRAIL INSTALLATION

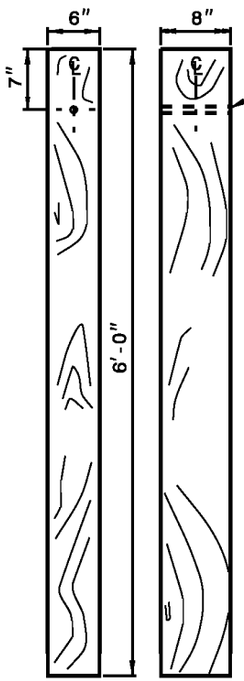

STANDARD LINE POST

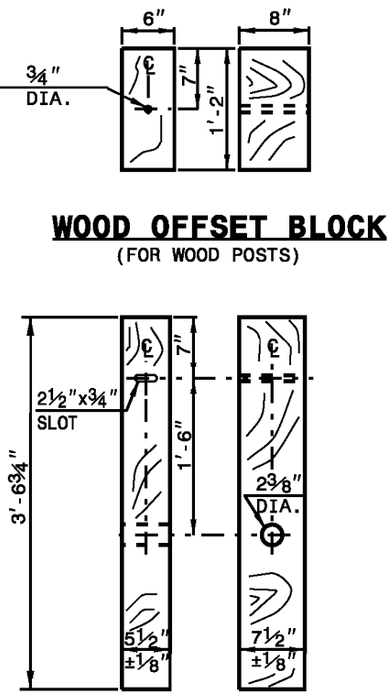

WOOD OFFSET BLOCK
(FOR WOOD POSTS)

SHORT WOOD BREAKAWAY POST

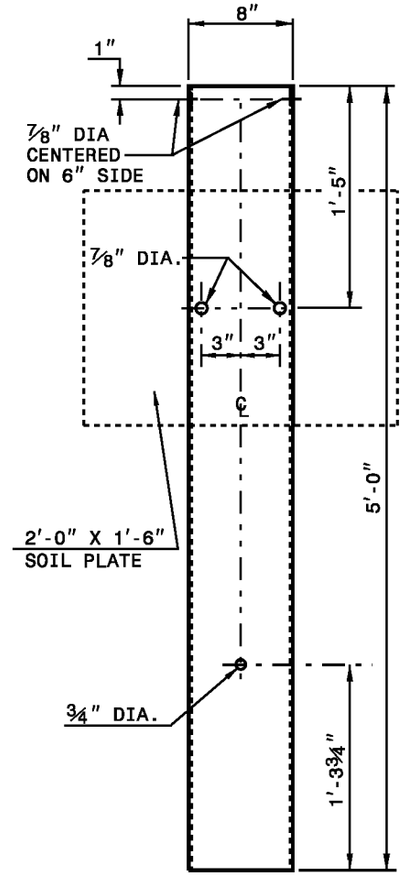

STEEL TUBE
TS 6"x8"x0.1875"

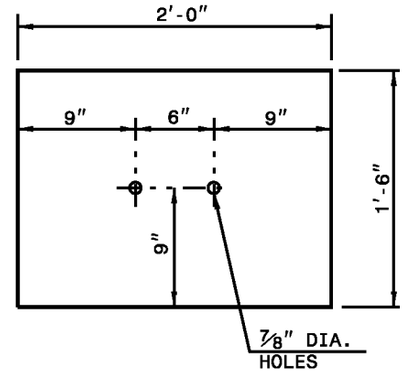

SOIL PLATE
¼" THICK PLATE

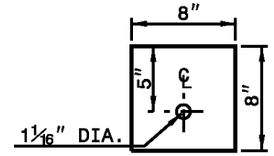

BEARING PLATE
⅝" THICK PLATE

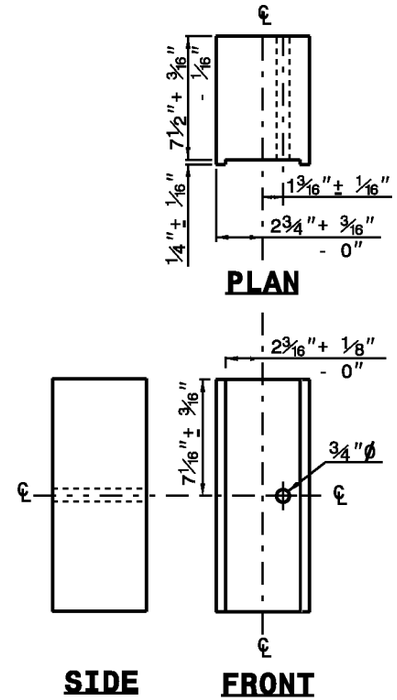

ROUTED OFFSET BLOCK

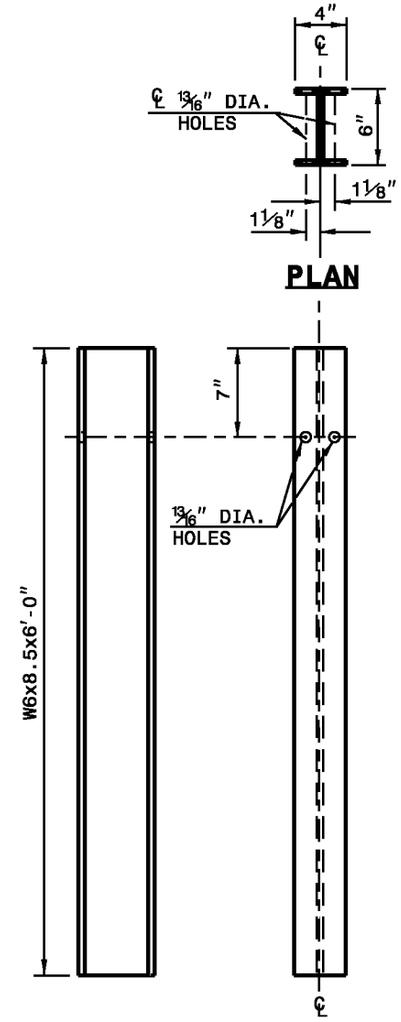

"W6" STEEL POST

SYSTEM PARTS

STATE OF
NORTH CAROLINA
DEPT. OF TRANSPORTATION
DIVISION OF HIGHWAYS
RALEIGH, N.C.

1-12

ENGLISH STANDARD DRAWING FOR
GUARDRAIL INSTALLATION

SHEET 4 OF 7
862.02

STATE OF
NORTH CAROLINA
DEPT. OF TRANSPORTATION
DIVISION OF HIGHWAYS
RALEIGH, N.C.

1-12

ENGLISH STANDARD DRAWING FOR
GUARDRAIL INSTALLATION

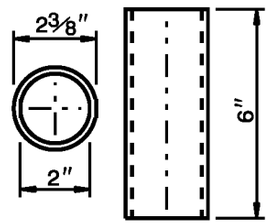

BREAKAWAY TERMINAL POST SLEEVE

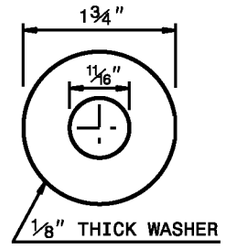

DETAIL OF STANDARD WASHER

STANDARD WASHER: TYPICAL USE UNDER NUT WITH WOOD POST

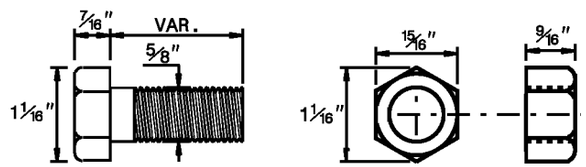

DETAIL OF STANDARD HEX BOLT AND NUT

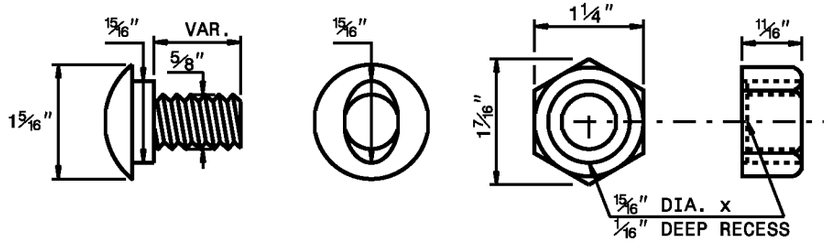

DETAIL OF BUTTON HEAD BOLT AND NUT

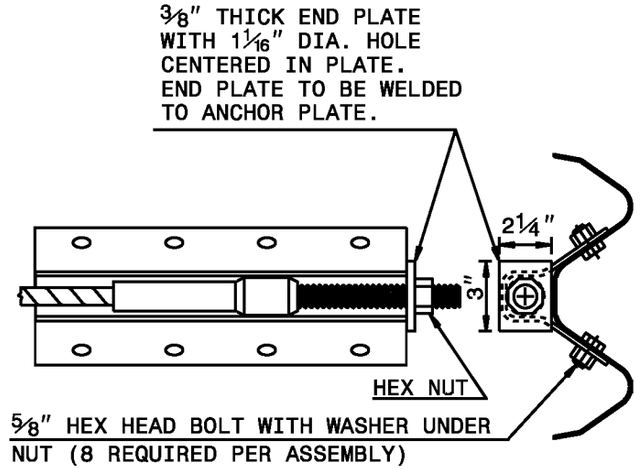

ANCHOR PLATE ASSEMBLY

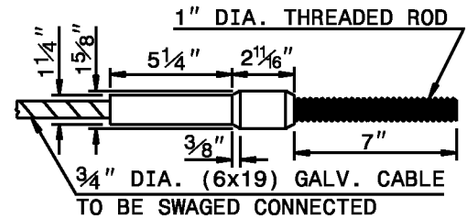

SWAGED CABLE

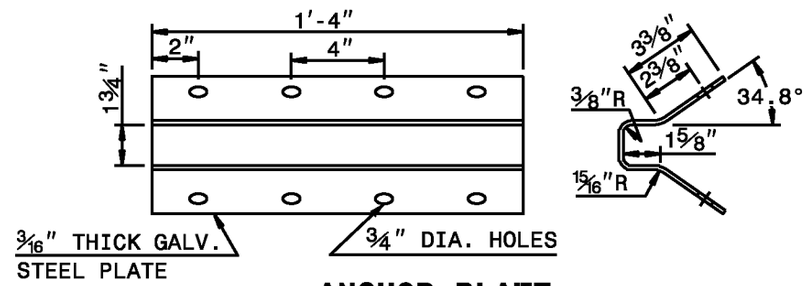

ANCHOR PLATE

CABLE ASSEMBLY

SYSTEM PARTS

SHEET 5 OF 7

862.02

STATE OF
NORTH CAROLINA
DEPT. OF TRANSPORTATION
DIVISION OF HIGHWAYS
RALEIGH, N.C.

1-12

ENGLISH STANDARD DRAWING FOR
GUARDRAIL INSTALLATION

SHEET 5 OF 7

862.02

STATE OF
NORTH CAROLINA
DEPT. OF TRANSPORTATION
DIVISION OF HIGHWAYS
RALEIGH, N.C.

1-12

ENGLISH STANDARD DRAWING FOR

GUARDRAIL INSTALLATION

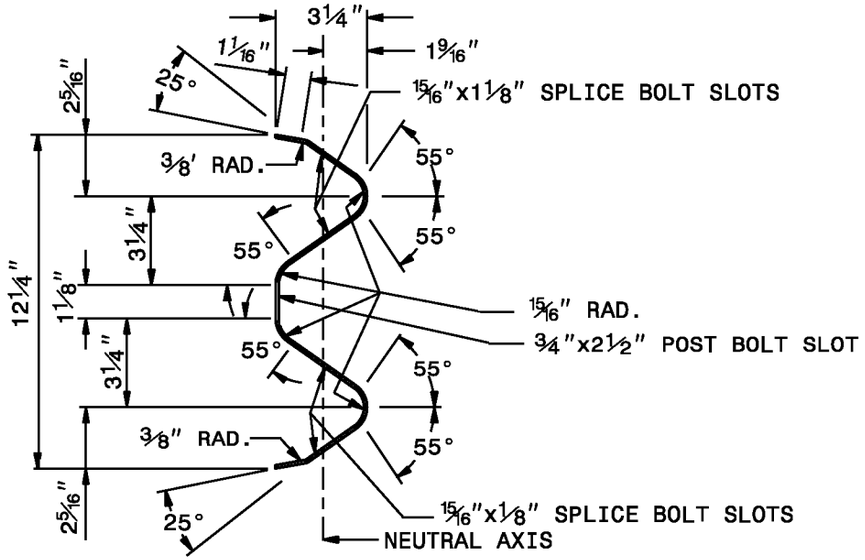

SECTION X-X

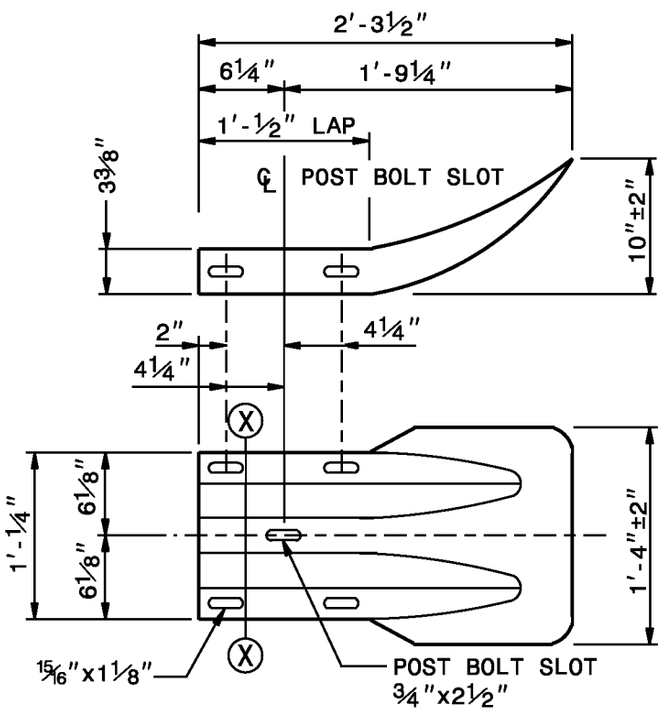

TERMINAL END SECTION

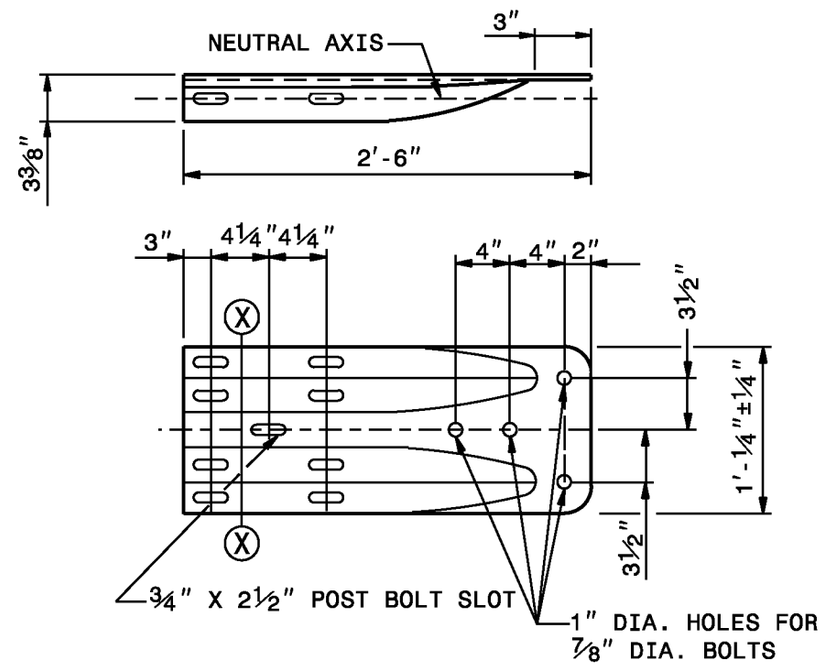

TYPICAL END SHOE

SYSTEM PARTS - GENERAL USE

SHEET 6 OF 7

862.02

STATE OF
NORTH CAROLINA
DEPT. OF TRANSPORTATION
DIVISION OF HIGHWAYS
RALEIGH, N.C.

1-12

ENGLISH STANDARD DRAWING FOR

GUARDRAIL INSTALLATION

SHEET 6 OF 7

862.02

STATE OF
NORTH CAROLINA
DEPT. OF TRANSPORTATION
DIVISION OF HIGHWAYS
RALEIGH, N.C.

1-12

ENGLISH STANDARD DRAWING FOR

GUARDRAIL INSTALLATION

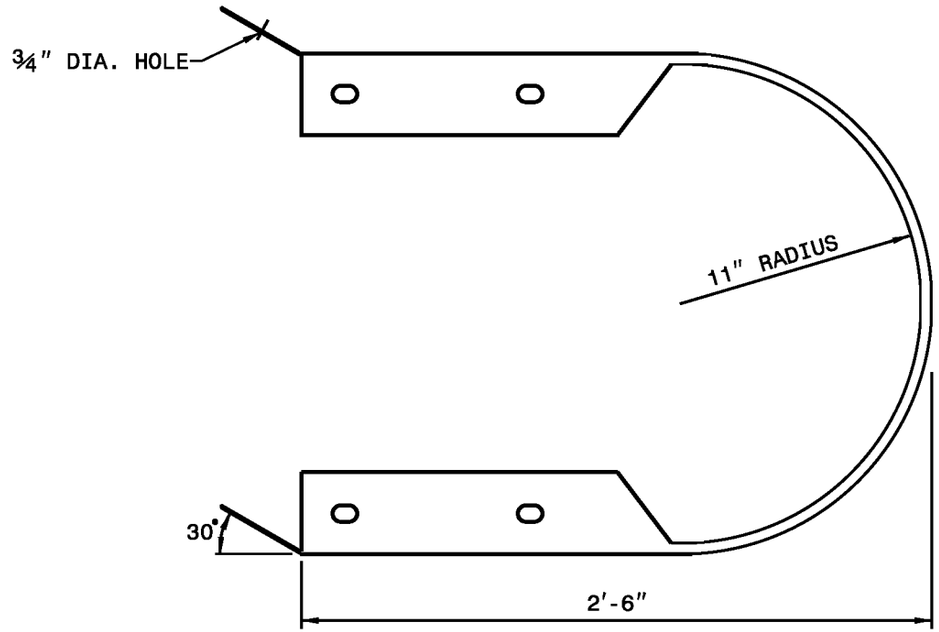

PLAN

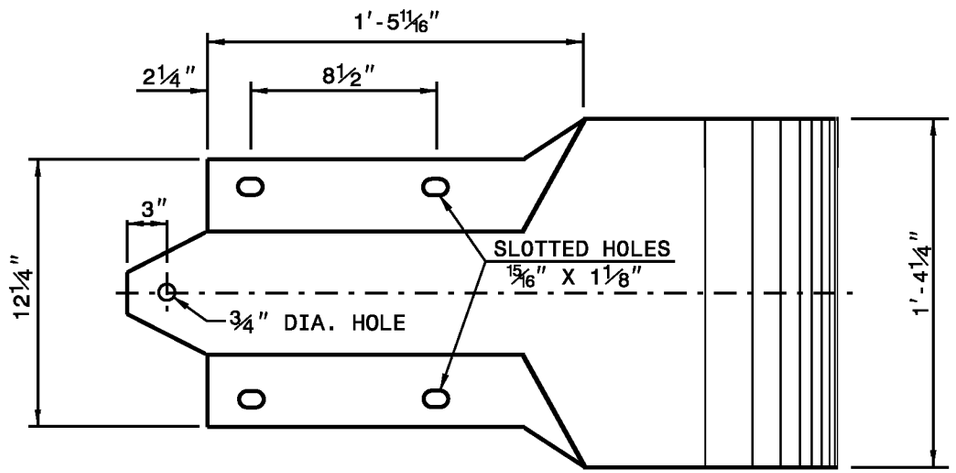

ELEVATION

BUFFERED END SECTION

SHEET 7 OF 7

862.02

STATE OF
NORTH CAROLINA
DEPT. OF TRANSPORTATION
DIVISION OF HIGHWAYS
RALEIGH, N.C.

1-12

ENGLISH STANDARD DRAWING FOR

GUARDRAIL INSTALLATION

SHEET 7 OF 7

862.02

STATE OF
NORTH CAROLINA
DEPT. OF TRANSPORTATION
DIVISION OF HIGHWAYS
RALEIGH, N.C.

1-12

ENGLISH STANDARD DRAWING FOR
STRUCTURE ANCHOR UNITS
GUARDRAIL ANCHOR UNIT, TYPE III
FOR ATTACHMENT TO RAIL ON BRIDGE

SHEET 1 OF 7

862.03

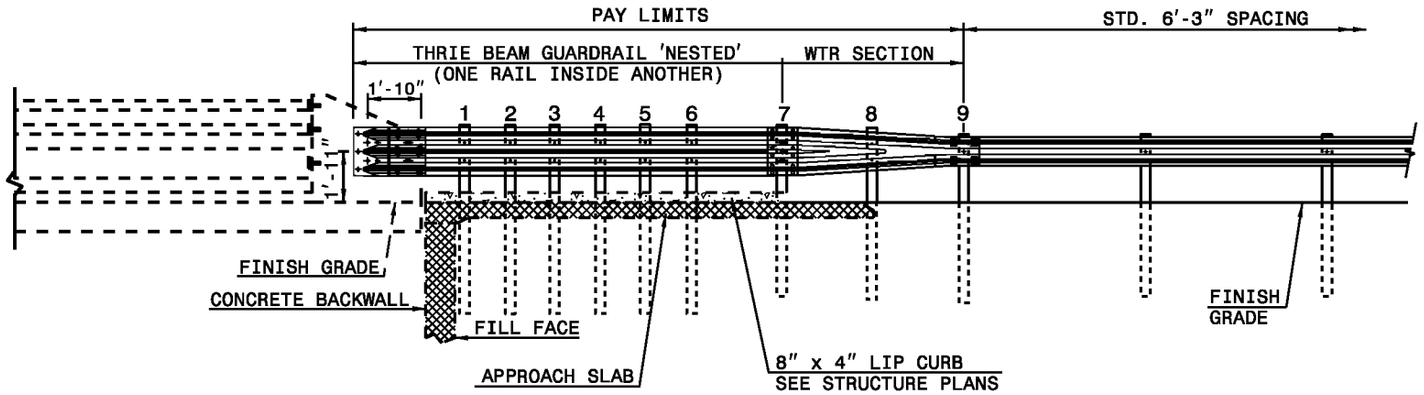

ELEVATION

NOTE:
**POST NOT REQUIRED FOR SKEW ANGLES GREATER THAN 150° OR LESS THAN 30° UNLESS OTHERWISE DIRECTED BY THE ENGINEER.
*THE DISTANCE FROM END OF BRIDGE RAIL TO CENTER LINE OF THE FIRST POST SHOULD BE 11½" IF CONCRETE BACKWALL IS NOT PRESENT.
-SHOULDER BERM GUTTER MUST BE INSTALLED TO THE LIMITS 8" x 4" LIP CURB IS SHOWN IF ANCHOR UNIT IS NOT ADJACENT TO AN APPROACH SLAB.
-MEASURE GUARDRAIL HEIGHT FROM THE TOP OF ADJACENT SURFACE (SHOULDER, BERM, OR GUTTER).
-LAP JOINTS IN THE DIRECTION OF TRAFFIC FLOW.
-SEE SHEET 5 FOR POST SECTIONS 1 THRU 9.

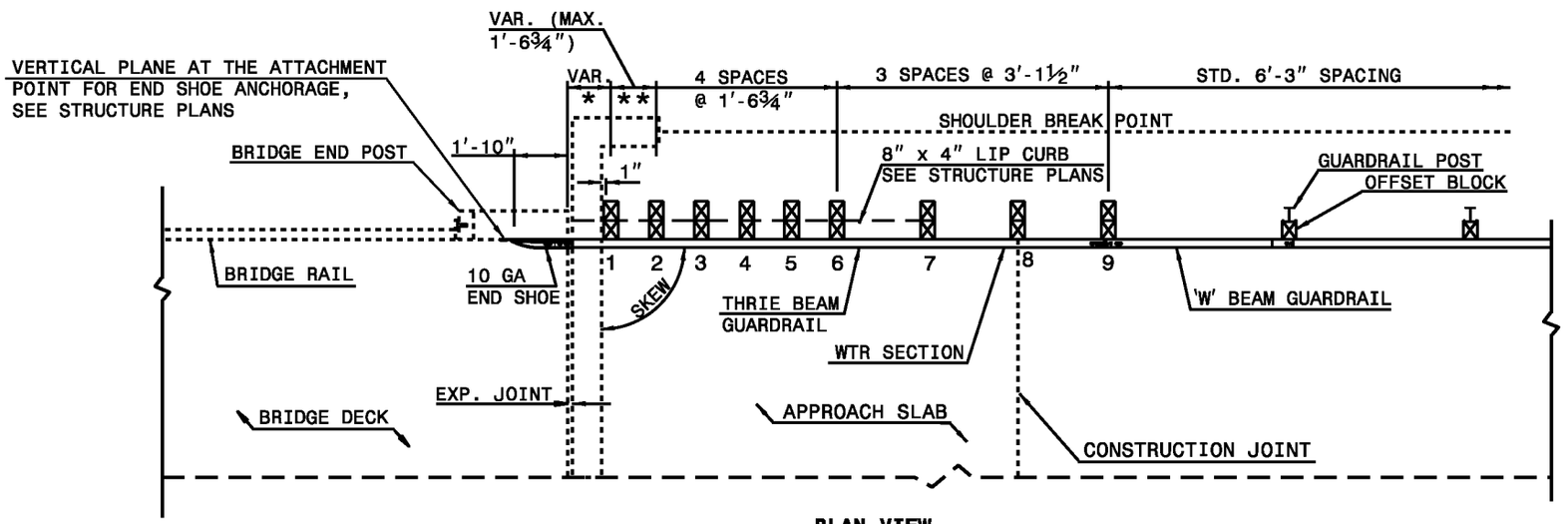

PLAN VIEW

GUARDRAIL ANCHOR UNIT, TYPE III
FOR ATTACHMENT TO RAIL ON BRIDGE

STATE OF
NORTH CAROLINA
DEPT. OF TRANSPORTATION
DIVISION OF HIGHWAYS
RALEIGH, N.C.

1-12

ENGLISH STANDARD DRAWING FOR
STRUCTURE ANCHOR UNITS
GUARDRAIL ANCHOR UNIT, TYPE III
FOR ATTACHMENT TO RAIL ON BRIDGE

SHEET 1 OF 7

862.03

STATE OF NORTH CAROLINA
DEPT. OF TRANSPORTATION
DIVISION OF HIGHWAYS
RALEIGH, N.C.

1-12

ENGLISH STANDARD DRAWING FOR
STRUCTURE ANCHOR UNITS
GUARDRAIL ANCHOR UNIT, TYPE III FOR ATTACHMENT TO
RAIL ON BRIDGE - SUB REGIONAL TIER

SHEET 2 OF 7

862.03

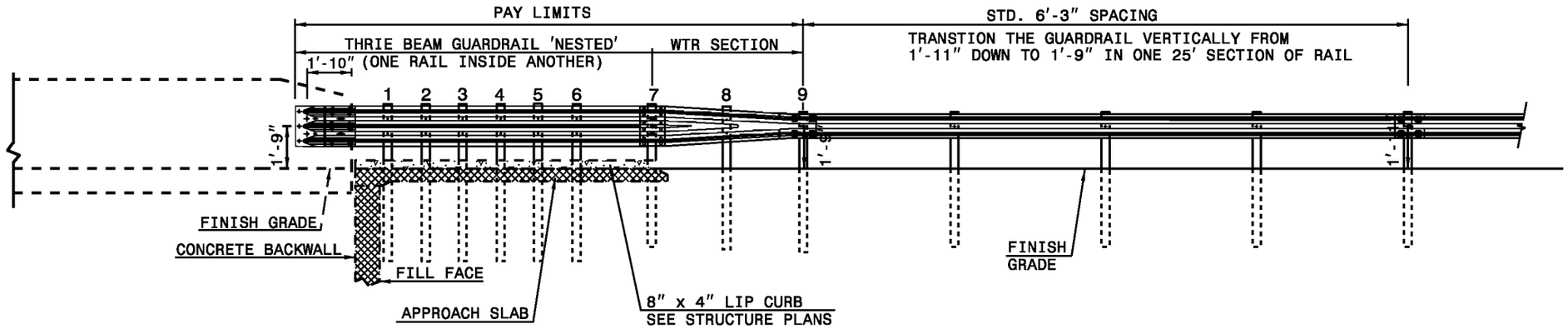

ELEVATION

NOTE:
**POST NOT REQUIRED FOR SKEW ANGLES GREATER THAN 150° OR LESS THAN 30° UNLESS OTHERWISE DIRECTED BY THE ENGINEER.
*THE DISTANCE FROM END OF BRIDGE RAIL TO CENTER LINE OF THE FIRST POST SHOULD BE 11½" IF CONCRETE BACKWALL IS NOT PRESENT.
-SHOULDER BERM GUTTER MUST BE INSTALLED TO THE LIMITS 8" x 4" LIP CURB IS SHOWN IF ANCHOR UNIT IS NOT ADJACENT TO AN APPROACH SLAB.
-MEASURE GUARDRAIL HEIGHT FROM THE TOP OF ADJACENT SURFACE (SHOULDER, BERM, OR GUTTER).
-LAP JOINTS IN THE DIRECTION OF TRAFFIC FLOW.
-SEE SHEET 5 FOR POST SECTIONS 1 THRU 9.

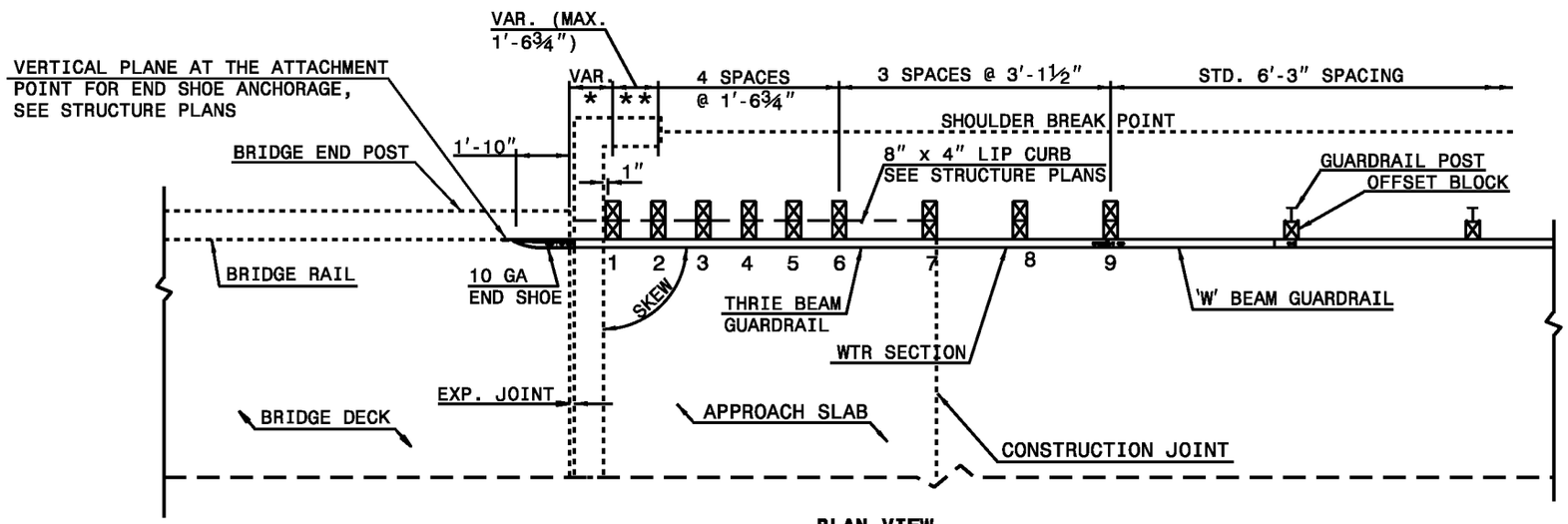

PLAN VIEW

GUARDRAIL ANCHOR UNIT, TYPE III FOR ATTACHMENT TO RAIL ON BRIDGE - SUB REGIONAL TIER

STATE OF NORTH CAROLINA
DEPT. OF TRANSPORTATION
DIVISION OF HIGHWAYS
RALEIGH, N.C.

1-12

ENGLISH STANDARD DRAWING FOR
STRUCTURE ANCHOR UNITS
GUARDRAIL ANCHOR UNIT, TYPE III FOR ATTACHMENT TO
RAIL ON BRIDGE - SUB REGIONAL TIER

SHEET 2 OF 7

862.03

STATE OF
NORTH CAROLINA
DEPT. OF TRANSPORTATION
DIVISION OF HIGHWAYS
RALEIGH, N.C.

1-12

ENGLISH STANDARD DRAWING FOR
STRUCTURE ANCHOR UNITS
GUARDRAIL ANCHOR UNIT, TYPE III

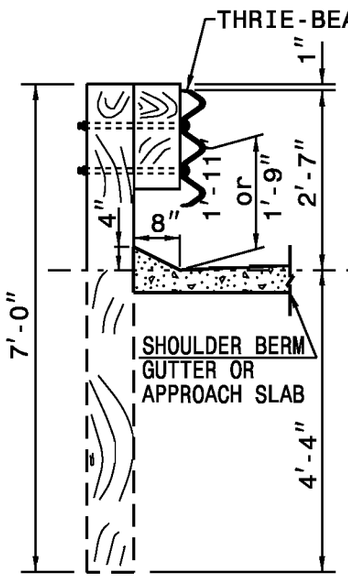

SECTION OF THRIE BEAM POSTS 1 THRU 6

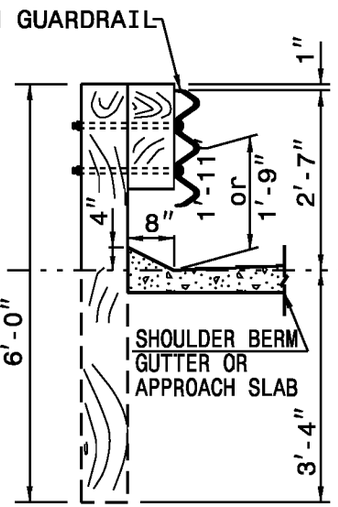

SECTION OF THRIE BEAM POST 7

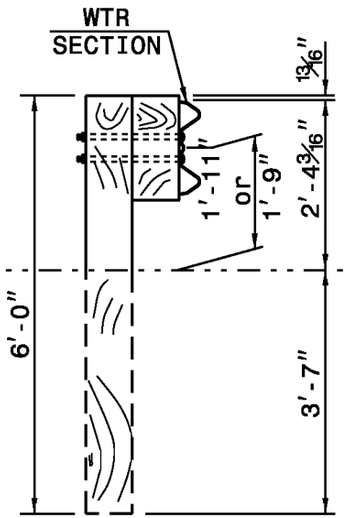

SECTION OF WTR BEAM POST 8

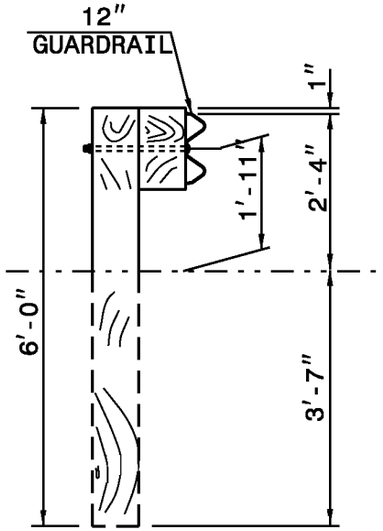

SECTION OF 'W' BEAM POST 9

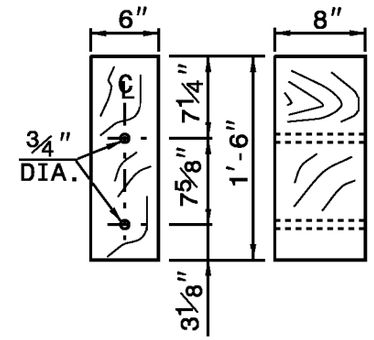

THRIE BEAM OFFSET BLOCK

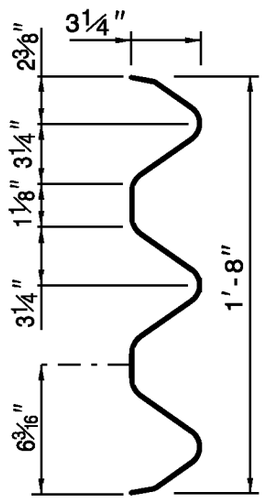

THRIE-BEAM SECTION

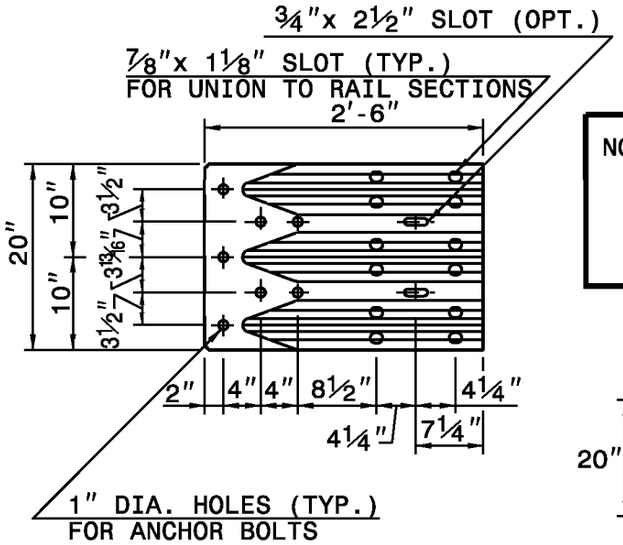

END SHOE

NOTE: THE MID POST AND OFFSET BLOCK OF THE WTR SECTION WILL REQUIRE SPECIAL BOLT HOLE DRILLING IN THE THRIE BEAM OFFSET BLOCK AND LINE POST.

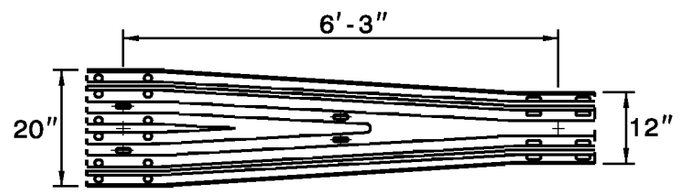

WTR SECTION
ELEVATION VIEW

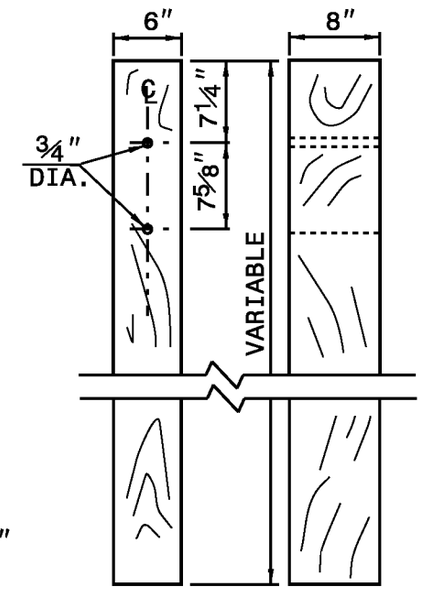

THRIE BEAM LINE POST

SHEET 3 OF 7
862.03

STATE OF
NORTH CAROLINA
DEPT. OF TRANSPORTATION
DIVISION OF HIGHWAYS
RALEIGH, N.C.

1-12

ENGLISH STANDARD DRAWING FOR
STRUCTURE ANCHOR UNITS
GUARDRAIL ANCHOR UNIT, TYPE III

SHEET 3 OF 7
862.03

STATE OF NORTH CAROLINA
DEPT. OF TRANSPORTATION
DIVISION OF HIGHWAYS
RALEIGH, N.C.

1-12

ENGLISH STANDARD DRAWING FOR
GUARDRAIL ANCHOR UNIT
GUARDRAIL ANCHOR UNIT TYPE B-77

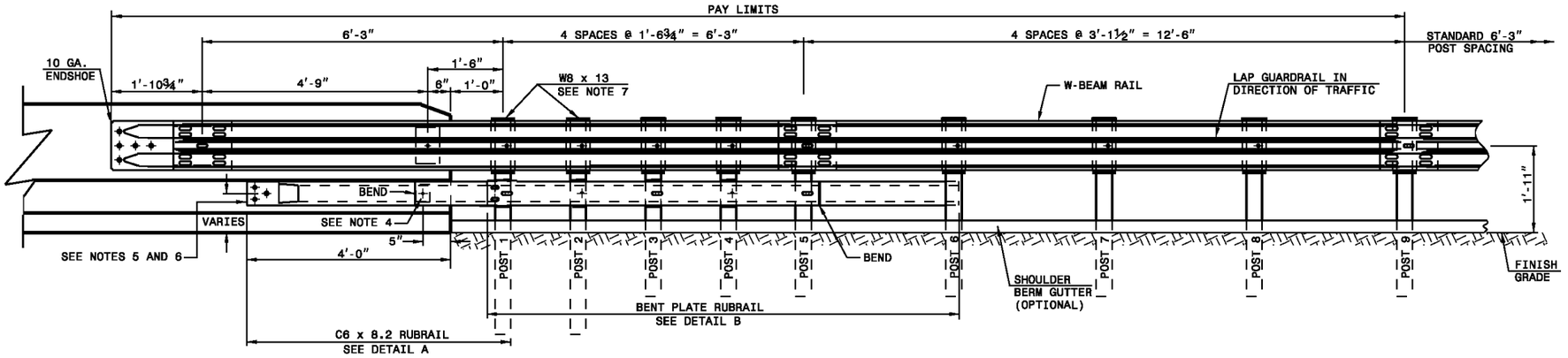

ELEVATION

GENERAL NOTES:

1) POSTS 1 THROUGH 5 REQUIRE AN ADDITIONAL HOLE TO ATTACH LOWER BLOCKOUTS AND/OR RUBRAIL.
2) RUBRAIL BLOCKOUTS LOCATED ON POSTS 1 THROUGH 4 ARE OFFSET DRILLED AND SECURED WITH ⅝" BUTTONHEAD BOLTS (SEE CHART FOR BOLT LENGTHS). SECURE BLOCKS ONLY TO POSTS 2 AND 4. SECURE RUBRAIL AND BLOCKOUTS TO POSTS 1 AND 3. RUBRAIL IS SECURED TO POST 5 WITH A ⅝" x 4½" BUTTONHEAD BOLT. RUBRAIL IS FLARED TO BACK OF POST 6 AND NOT SECURED.
3) STEEL SPACER TUBE IS A SCHEDULE 40 GALVANIZED PIPE 6" INSIDE DIAMETER x 9" LONG. ATTACH TUBE TO GUARDRAIL ONLY WITH ⅝" x 1¼" LONG BUTTONHEAD BOLT AND RECTANGULAR PLATE WASHER.
4) SEE DETAIL D FOR SLOPED RUBRAIL BLOCKOUT. BLOCKOUT IS ATTACHED TO RAIL ELEMENT ONLY. USE ⅜" x 3" LAG BOLT WITH FLAT WASHER.
5) SHOP FABRICATE THE C6 x 8.2 RUBRAIL END TO BE CONSISTENT WITH THE SLOPE OF THE JERSEY SHAPE AND ATTACH FLUSH WITH THE SLOPED TOE OF THE BARRIER OR BRIDGE RAIL.
6) ANCHORAGE:
   (a) AT EXISTING BRIDGE RAIL AND NEW OR EXISTING BARRIERS, ANCHOR RUBRAIL USING THREE ⅝" x 6" CHEMICALLY ANCHORED BOLTS WITH WASHERS. MAXIMUM PROJECTION FOR BOLTS IS ½".
   (b) AT EXISTING BRIDGE RAIL AND NEW OR EXISTING BARRIERS, ANCHOR THE W-BEAM END SHOE USING A 4 BOLT HOLD DOWN PLATE (SEE STD. DWG. 862.04). A 4 BOLT INSERT ASSEMBLY IS ALLOWED ON PRECAST REINFORCED CONCRETE BARRIER (SEE STD. DWG. 857.01). INSTALL THE W-BEAM END SHOE BEHIND THE NESTED W-BEAM ELEMENTS.
   (c) AT NEW BRIDGE RAIL, ANCHOR THE W-BEAM END SHOE AND RUBRAIL AS DETAILED ON THE STRUCTURE PLANS.
7) POSTS 1 AND 2 ARE W8 x 13, 7'-6" LONG. ALL OTHER POSTS IN THE ANCHOR UNIT ARE W6 x 8.5.

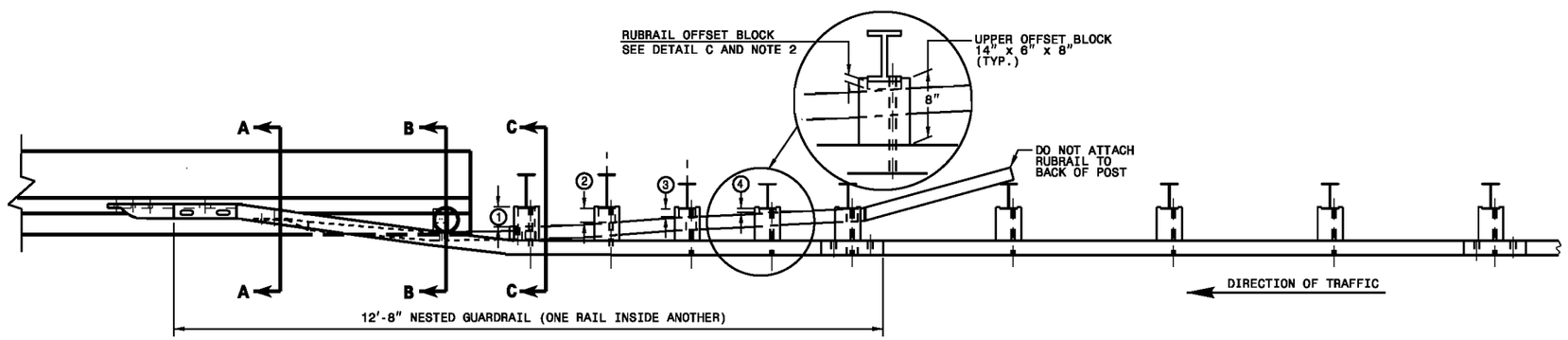

PLAN

GUARDRAIL ANCHOR UNIT TYPE B-77

SHEET 4 OF 7
862.03

STATE OF NORTH CAROLINA
DEPT. OF TRANSPORTATION
DIVISION OF HIGHWAYS
RALEIGH, N.C.

1-12

ENGLISH STANDARD DRAWING FOR
STRUCTURE ANCHOR UNIT
GUARDRAIL ANCHOR UNIT TYPE B-77

SHEET 4 OF 7
862.03

STATE OF NORTH CAROLINA
DEPT. OF TRANSPORTATION
DIVISION OF HIGHWAYS
RALEIGH, N.C.

1-12

ENGLISH STANDARD DRAWING FOR
STRUCTURE ANCHOR UNIT
GUARDRAIL ANCHOR UNIT TYPE B-77

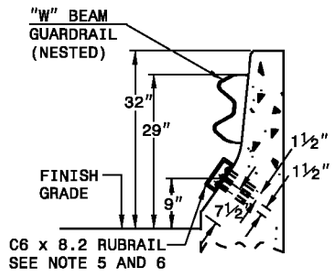

SECTION A-A

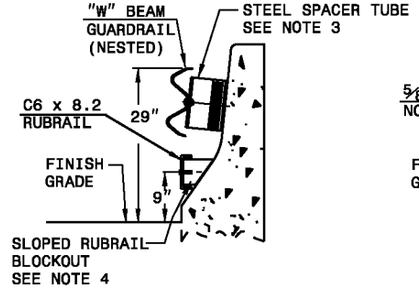

SECTION B-B

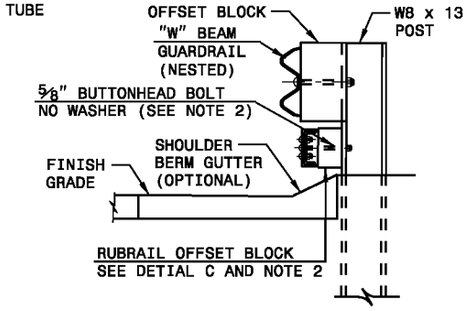

SECTION C-C

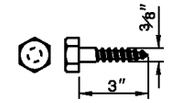

DETAIL E
LAG BOLT

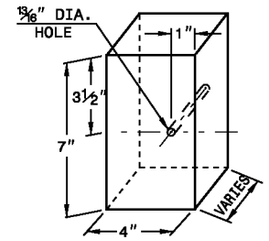

RUBRAIL BLOCKS 7" HIGH x 4" WIDE		
POST	THICKNESS	BOLT LENGTH
1	4¼"	9"
2	3¼"	5" *
3	2"	6"
4	1"	3" *

* BOLTS FOR POSTS 2 AND 4 ARE USED TO ATTACH BLOCK TO POST. RUBRAIL NOT ATTACHED TO BLOCK.

DETAIL C
RUBRAIL BLOCKOUT

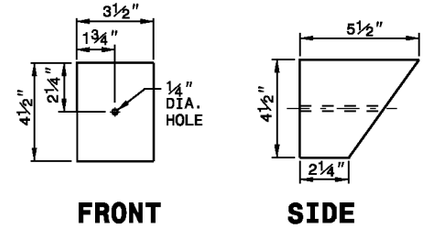

DETAIL D
SLOPED RUBRAIL BLOCKOUT

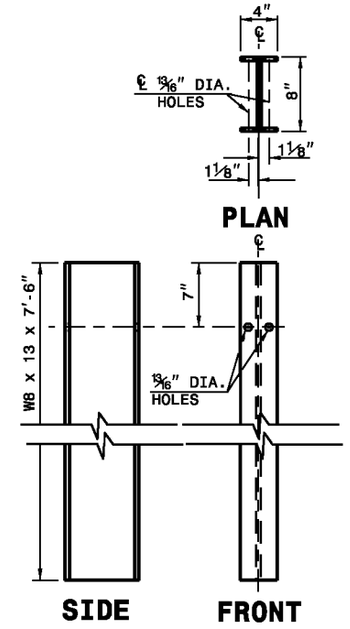

DETAIL F STEEL POST
"W8 X 13 X 7'-6"

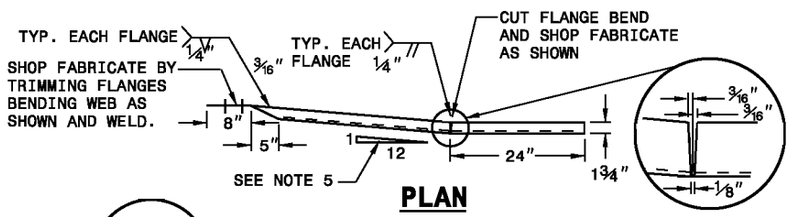

PLAN

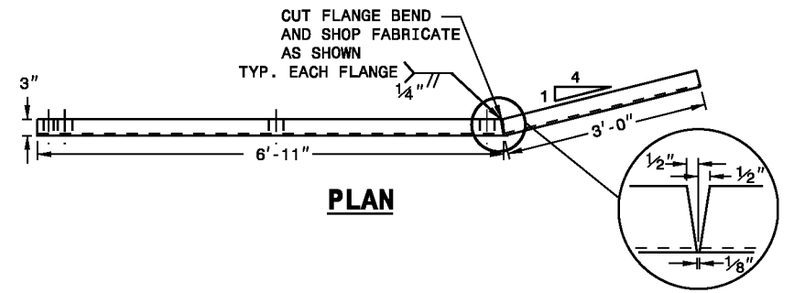

PLAN

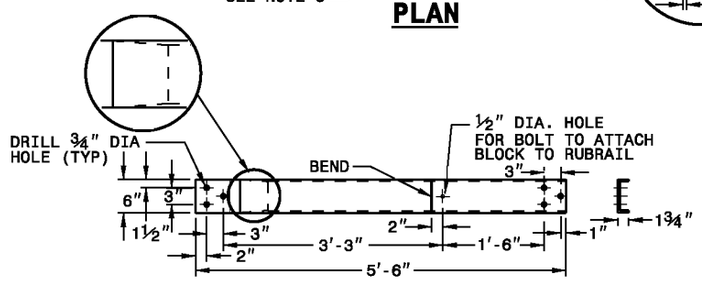

ELEVATION

DETAIL A
C6 x 8.2 RUBRAIL

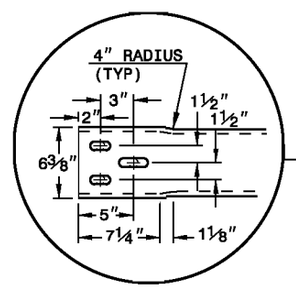

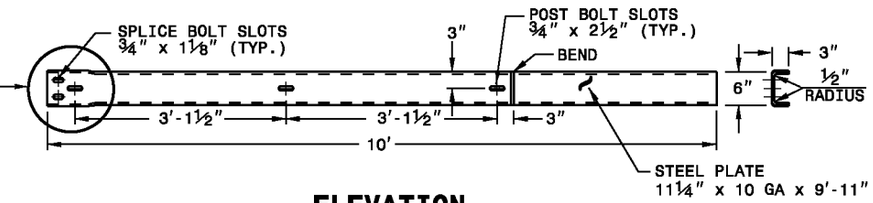

ELEVATION

DETAIL B
BENT PLATE RUBRAIL

GUARDRAIL ANCHOR UNIT TYPE B-77

SHEET 5 OF 7
862.03

STATE OF NORTH CAROLINA
DEPT. OF TRANSPORTATION
DIVISION OF HIGHWAYS
RALEIGH, N.C.

1-12

ENGLISH STANDARD DRAWING FOR
STRUCTURE ANCHOR UNIT
GUARDRAIL ANCHOR UNIT TYPE B-77

SHEET 5 OF 7
862.03

STATE OF
NORTH CAROLINA
DEPT. OF TRANSPORTATION
DIVISION OF HIGHWAYS
RALEIGH, N.C.

1-12

ENGLISH STANDARD DRAWING FOR
STRUCTURE ANCHOR UNITS
GUARDRAIL ANCHOR UNIT TYPE B-83

SHEET 6 OF 7

862.03

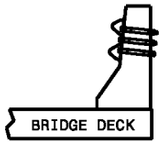

SECTION A-A

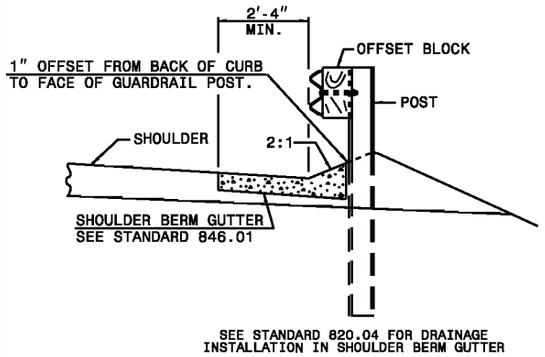

SECTION B-B

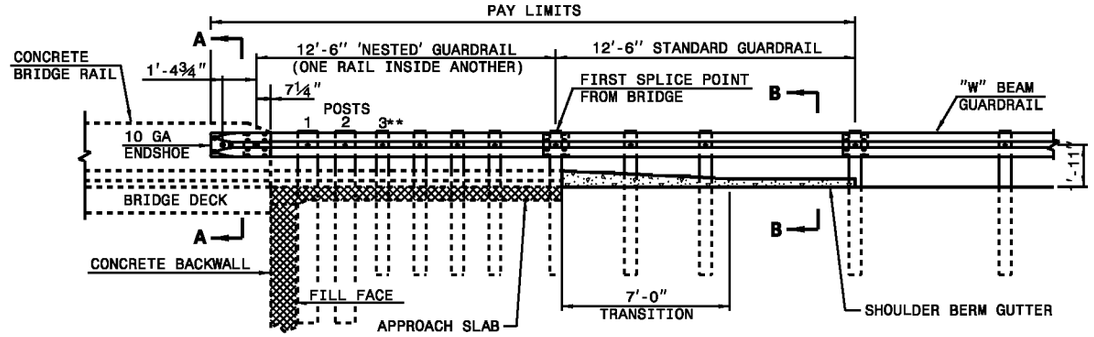

ELEVATION VIEW

NOTE:
- **ELIMINATE POST 3 AND SHIFT POSTS 1 & 2 ON SKEW ANGLES GREATER THAN 150° OR LESS THAN 30° UNLESS OTHERWISE DIRECTED BY THE ENGINEER.
- *THE DISTANCE FROM END OF BRIDGE RAIL TO CENTER LINE OF THE FIRST POST SHOULD BE 11½" IF CONCRETE BACKWALL IS NOT PRESENT.
- -MEASURE GUARDRAIL HEIGHT FROM THE TOP OF ADJACENT SURFACE (SHOULDER, BERM, OR GUTTER).
- -USE NO WOOD POSTS WITHIN THE GUARDRAIL ANCHOR UNIT LIMITS.
- -LAP JOINTS IN THE DIRECTION OF TRAFFIC FLOW.
- -POSTS 1 AND 2 TO BE W8 x 21 X 8'-0" LONG STEEL POST AND 8" X 8" X 14" WOOD ROUTED OFFSET BLOCK.
- -SHOULDER BERM GUTTER IS REQUIRED IF NO CURBING EXISTS THROUGH ANCHOR UNIT PAY LIMITS.
- -ANCHOR THE W-BEAM END SHOE USING A 4 BOLT HOLD DOWN PLATE AS SHOWN IN STANDARD 862.04

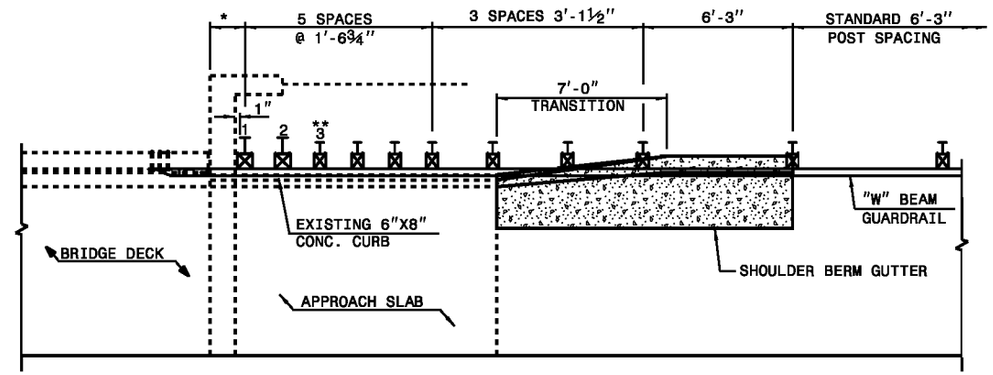

PLAN VIEW

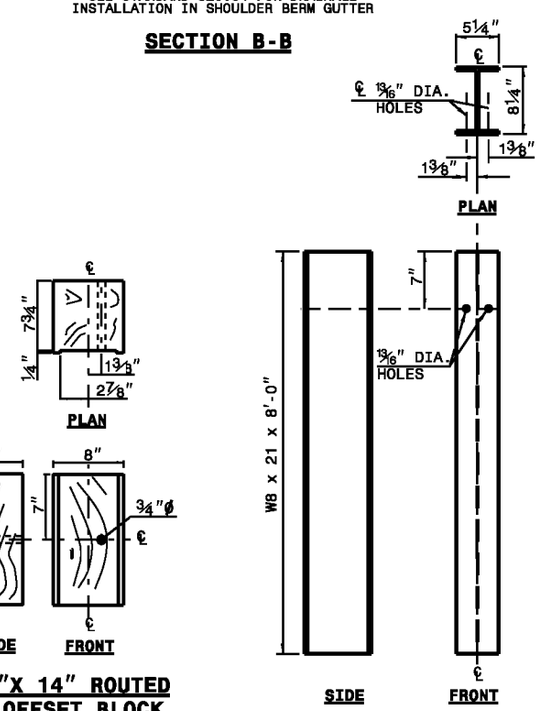

8"X 8"X 14" ROUTED WOOD OFFSET BLOCK

"W8 X 21 X 8'-0" STEEL POST

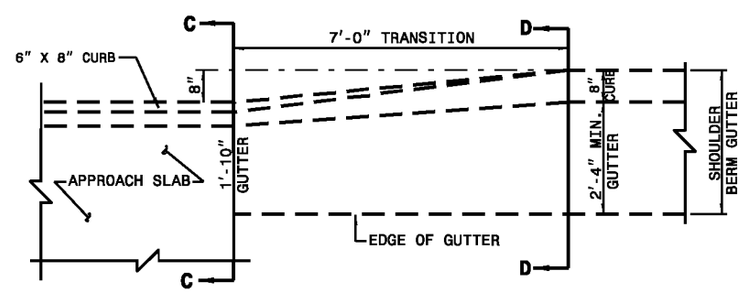

TRANSITION APPROACH SLAB CURB TO SHOULDER BERM GUTTER

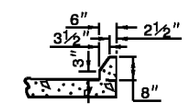

SECTION C-C
APPROACH SLAB CURB

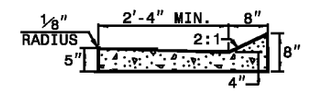

SECTION D-D
SHOULDER BERM GUTTER

GUARDRAIL ANCHOR UNIT TYPE B-83

STATE OF
NORTH CAROLINA
DEPT. OF TRANSPORTATION
DIVISION OF HIGHWAYS
RALEIGH, N.C.

1-12

ENGLISH STANDARD DRAWING FOR
STRUCTURE ANCHOR UNITS
GUARDRAIL ANCHOR UNIT TYPE B-83

SHEET 6 OF 7

862.03

STATE OF
NORTH CAROLINA
DEPT. OF TRANSPORTATION
DIVISION OF HIGHWAYS
RALEIGH, N.C.

1-12

ENGLISH STANDARD DRAWING FOR
STRUCTURE ANCHOR UNITS
ANCHORAGE FOR GUARDRAIL POST ON BOX CULVERT

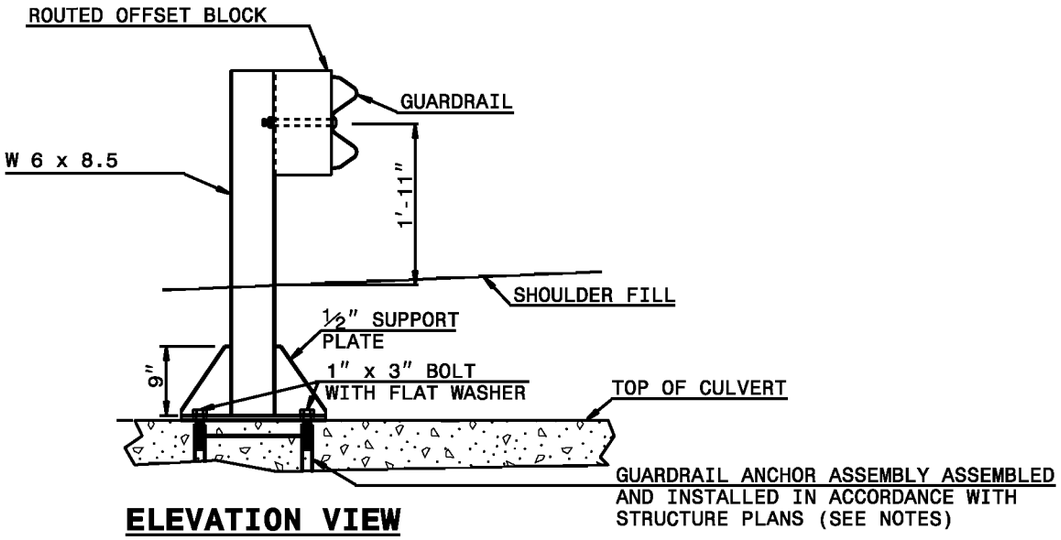

ELEVATION VIEW

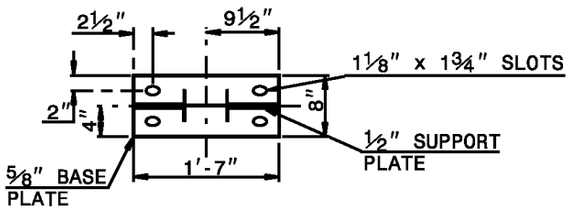

PLAN VIEW

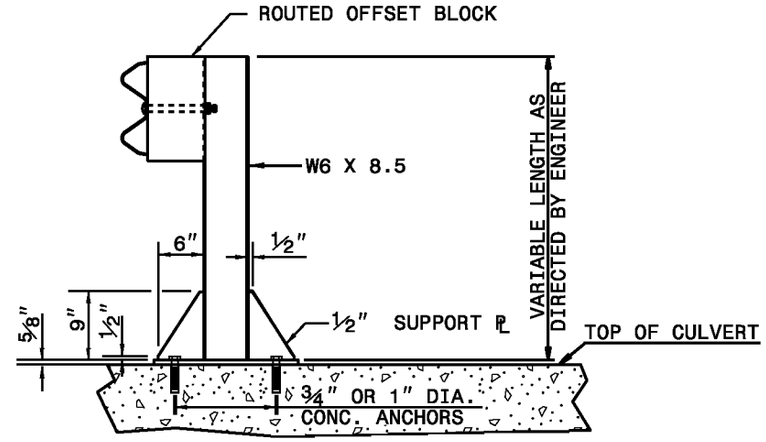

ELEVATION VIEW

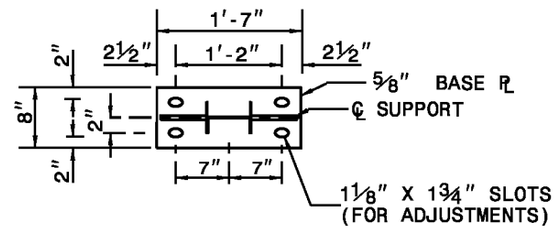

PLAN VIEW

NOTES FOR:
GUARDRAIL POST ANCHORED TO STRUCTURE:
- -USE FULL LENGTH ¼" BUTT WELDS AT ALL LOCATIONS OF CONTACT BETWEEN THE BASE PLATE, SUPPORT PLATES AND STEEL POST.
- -USE POST AND POST BASE PLATES CONFORMING TO THE REQUIREMENTS OF A.S.T.M. A-36 AND GALVANIZED AFTER FABRICATION TO CONFORM TO A.S.T.M. A-123.

NEW STRUCTURES:
- -ATTACH POST TO INSERT ASSEMBLY UNITS (USING ANCHOR BOLTS SUPPLIED WITH INSERTS) WHICH HAVE BEEN CAST INTO THE STRUCTURE DURING CONSTRUCTION.

EXISTING STRUCTURES:
- -USE CONCRETE ANCHORS CONSISTING OF A STUD BOLT WITH NUT AND WASHER. USE STUDS THREADED ON ONE END AND HAVING AN EXPANDED WEDGE ASSEMBLY POSITIONED AROUND A TAPERED AREA AT THE OTHER END. USE ANCHORS WHICH PROVIDE A MINIMUM SAFE HOLDING POWER OF 2875 LBS. FOR A ¾" OR 1" DIAMETER BOLT. CALCULATE HOLDING POWER BASED ON ¼ THE ACTUAL HOLDING POWER OF THE ANCHOR IN 3500 PSI CONCRETE AS DETERMINED BY AN APPROVED COMMERCIAL TESTING LABORATORY.

- -USE ANCHORS GALVANIZED IN ACCORDANCE WITH A.S.T.M. A-153. SIZE HOLES FOR THE CONCRETE ANCHORS IN ACCORDANCE WITH THE ANCHOR MANUFACTURER'S RECOMMENDATIONS. DRILL HOLES WITH A CARBIDE OR DIAMOND TIPPED MASONRY BIT POWERED BY A ROTARY OR ROTARY IMPACT DRILL. NO OTHER IMPACT TOOLS WILL BE PERMITTED. DRILL HOLES VERTICALLY. FURNISH DOCUMENTATION OF HOLE SIZE RECOMMENDED FOR THE SPECIFIED ANCHOR TO THE ENGINEER BEFORE DRILLING HOLES. THOROUGHLY CLEAN HOLES FOR ANCHORS OF ALL CONCRETE CHIPS, DUST, GREASE, OIL, ETC. BEFORE ANCHORS ARE INSTALLED. REPAIR ALL DAMAGE CAUSED BY THIS WORK TO THE SATISFACTION OF THE ENGINEER.

ANCHORAGE FOR GUARDRAIL POST ON BOX CULVERT

STATE OF
NORTH CAROLINA
DEPT. OF TRANSPORTATION
DIVISION OF HIGHWAYS
RALEIGH, N.C.

1-12

ENGLISH STANDARD DRAWING FOR
STRUCTURE ANCHOR UNITS
ANCHORAGE FOR GUARDRAIL POST ON BOX CULVERT

SHEET 7 OF 7
862.03

STATE OF
NORTH CAROLINA
DEPT. OF TRANSPORTATION
DIVISION OF HIGHWAYS
RALEIGH, N.C.

1-12

ENGLISH STANDARD DRAWING FOR
ANCHORING END OF GUARDRAIL
FOR B-77 AND B-83 ANCHOR UNITS

SHEET 1 OF 1
862.04

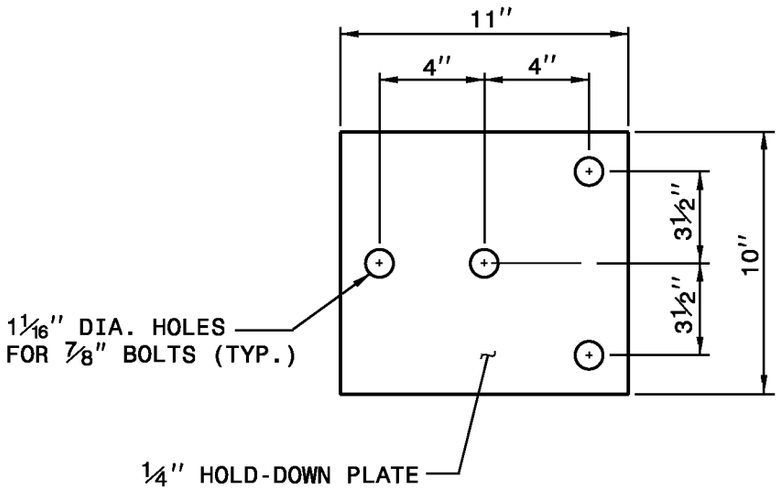

4 BOLT HOLD DOWN PLATE

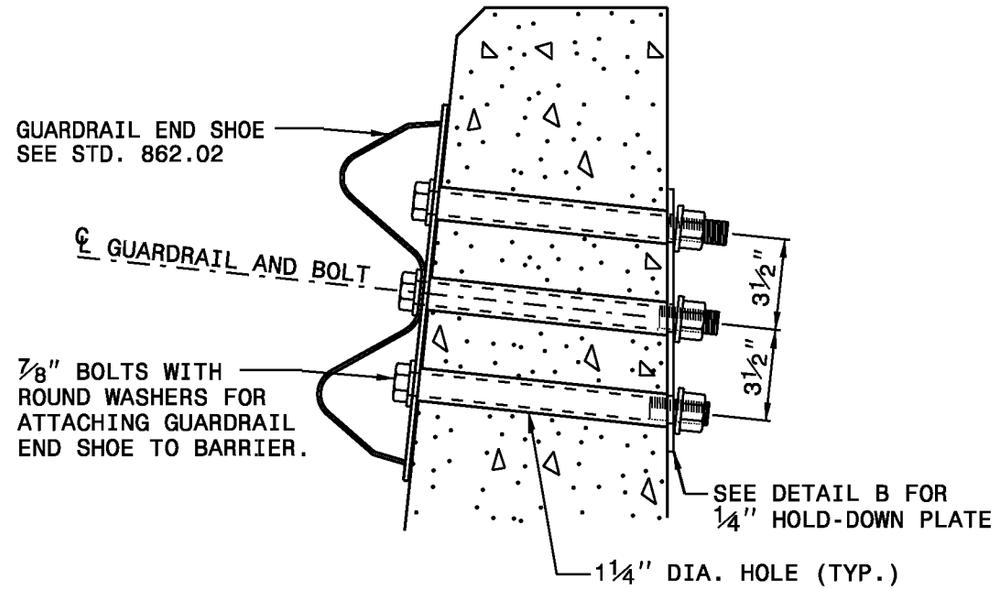

PART SECTION OF BARRIER OR RAIL

THRU END SHOE SECTION AND
4 BOLT HOLD DOWN PLATE

NOTES FOR 4 BOLT HOLD DOWN PLATE

FOR GUARDRAIL ANCHOR ASSEMBLY USE ¼" HOLD DOWN PLATE AND 4 - ⅞" DIA. BOLTS WITH NUTS AND WASHERS.

USE HOLD-DOWN PLATE THAT CONFORMS TO AASHTO M270 GRADE 36. AFTER FABRICATION, HOT-DIP GALVANIZE THE HOLD-DOWN PLATE IN ACCORDANCE WITH AASHTO M111.

AFTER INSTALLATION, BURR THE EXPOSED THREAD OF THE BOLT WITH A SHARP POINTED TOOL. FORM OR DRILL THE 1¼" DIA. HOLES WITH A CORE BIT. IMPACT TOOLS WILL NOT BE PERMITTED. REPAIR ANY CONCRETE DAMAGED BY THIS WORK TO THE SATISFACTION OF THE ENGINEER.

STATE OF
NORTH CAROLINA
DEPT. OF TRANSPORTATION
DIVISION OF HIGHWAYS
RALEIGH, N.C.

1-12

ENGLISH STANDARD DRAWING FOR
ANCHORING END OF GUARDRAIL
FOR B-77 AND B-83 ANCHOR UNITS

SHEET 1 OF 1
862.04

STATE OF
NORTH CAROLINA
DEPT. OF TRANSPORTATION
DIVISION OF HIGHWAYS
RALEIGH, N.C.

1-12

ENGLISH STANDARD DRAWING FOR

CABLE GUIDERAIL

MEDIAN HAZARD GUIDERAIL LAYOUT

SHEET 1 OF 12

865.01

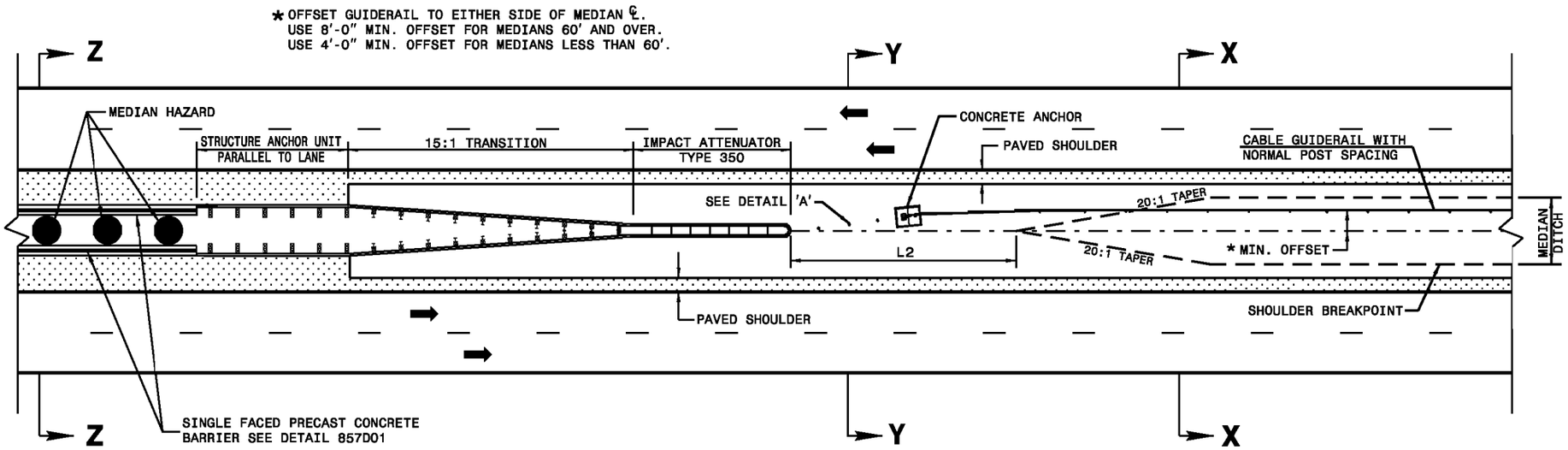

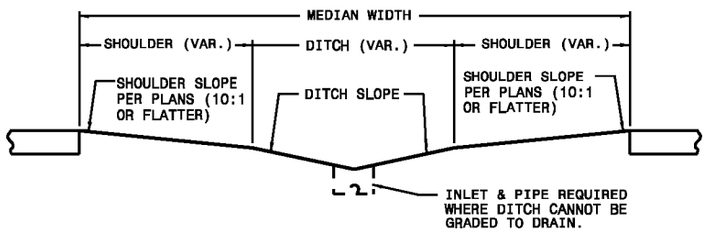

SECT. XX

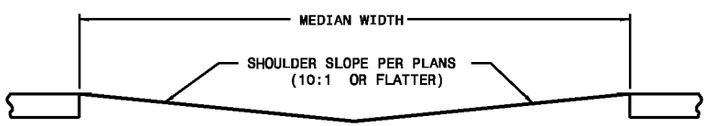

SECT. YY

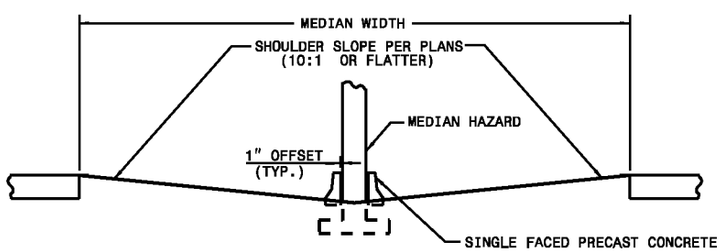

SECT. ZZ

LIMITS OF -L2-	
MEDIAN WIDTH	-L2- DIMENSION
30'	80.0'
36'	60.0'
40' & ABOVE	40.0'

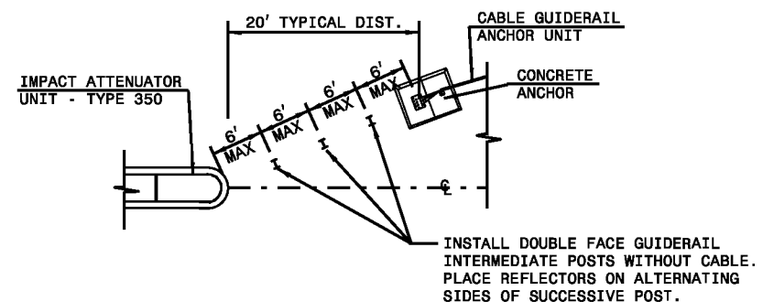

NOTE: POSTS WILL ONLY BE PLACED IN ONE OF THE TWO OPENINGS AT EACH MEDIAN HAZARD UNLESS OTHERWISE DIRECTED BY THE ENGINEER.

DETAIL 'A'

DETAIL OF TREATMENT AT MEDIAN HAZARDS

STATE OF
NORTH CAROLINA
DEPT. OF TRANSPORTATION
DIVISION OF HIGHWAYS
RALEIGH, N.C.

1-12

ENGLISH STANDARD DRAWING FOR

CABLE GUIDERAIL

MEDIAN HAZARD GUIDERAIL LAYOUT

SHEET 1 OF 12

865.01

STATE OF NORTH CAROLINA
DEPT. OF TRANSPORTATION
DIVISION OF HIGHWAYS
RALEIGH, N.C.

1-12

ENGLISH STANDARD DRAWING FOR
CABLE GUIDERAIL
DUAL LANE BRIDGES GUIDERAIL LAYOUT

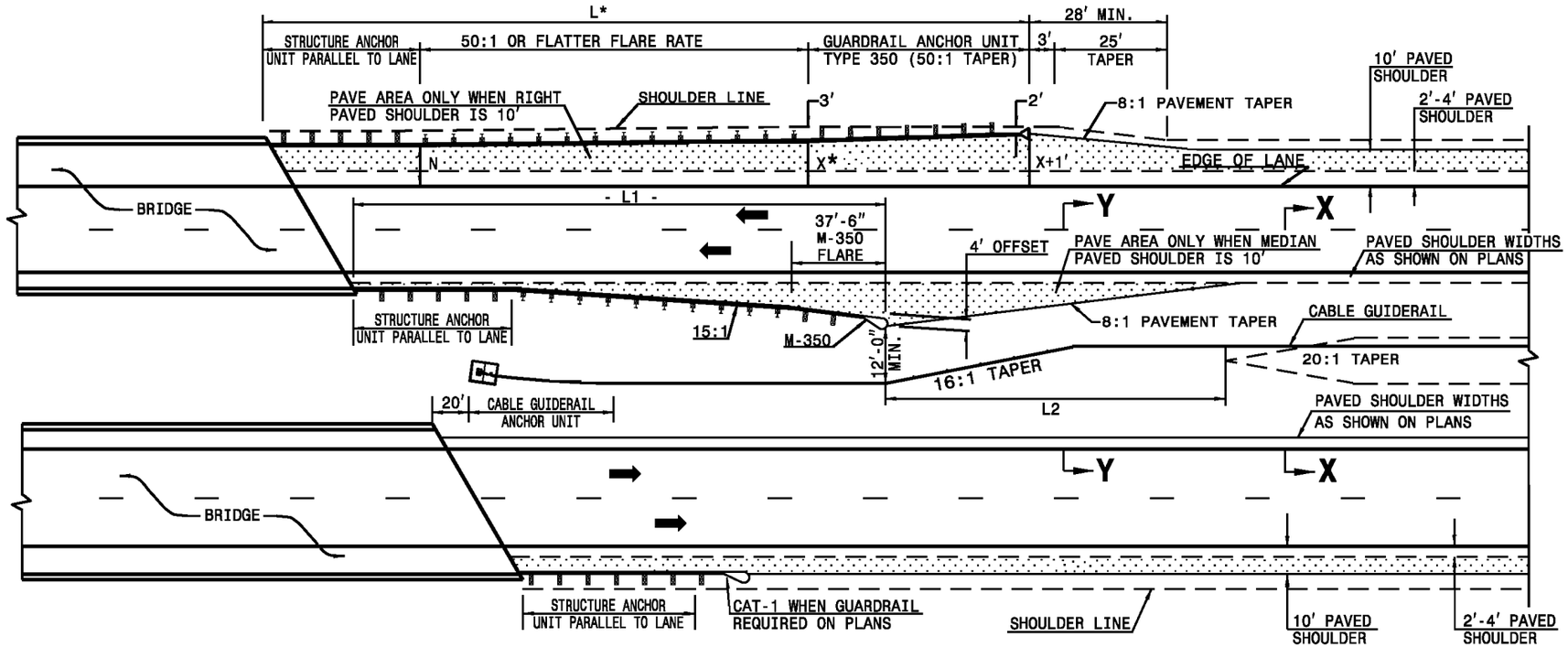

DIMENSIONS FOR LENGTH OF GUARDRAIL APPROACHING DUAL LANE BRIDGES							
MEDIAN WIDTH	-L-*			-L1-			-L2-
	70 MPH	60 MPH	50 MPH	70 MPH	60 MPH	50 MPH	DIM.
46' & ABOVE	300.0'	250.0'	150.0'	212.5'	187.5'	137.5'	40.0'

NOTES: * BASED ON "X" OF 12'
USE FLARE RATE AS THE CONTROL IF THE "X" DISTANCE IS NOT OBTAINED. ("X" IS BASED ON SHOULDER WIDTHS IN THE HIGHWAY DESIGN BRANCH MANUAL, PART 1, 1-4B, F1A).

"N"= DISTANCE FROM EDGE OF LANE TO FACE OF GUARDRAIL WHERE GUARDRAIL IS PARALLEL TO LANE.

THE DESIGN LAYOUT FOR LENGTHS SHOWN ON THIS STANDARD ARE MINIMUM DESIGN LENGTHS.

SEE STANDARD 862.01 SHEET 1 FOR SECTIONS XX, YY

SEE STD. 862.03 FOR STRUCTURE ANCHOR UNITS

DETAIL OF CABLE GUIDERAIL AT DUAL LANE BRIDGES

STATE OF NORTH CAROLINA
DEPT. OF TRANSPORTATION
DIVISION OF HIGHWAYS
RALEIGH, N.C.

1-12

ENGLISH STANDARD DRAWING FOR
CABLE GUIDERAIL
DUAL LANE BRIDGES GUIDERAIL LAYOUT

SHEET 2 OF12
865.01

STATE OF
NORTH CAROLINA
DEPT. OF TRANSPORTATION
DIVISION OF HIGHWAYS
RALEIGH, N.C.

1-12

ENGLISH STANDARD DRAWING FOR

CABLE GUIDERAIL

46′ MEDIAN GUIDERAIL TRANSITIONS WITH
SUPERELEVATION AND/OR FALSE SUMPS

SHEET 3 OF 12

865.01

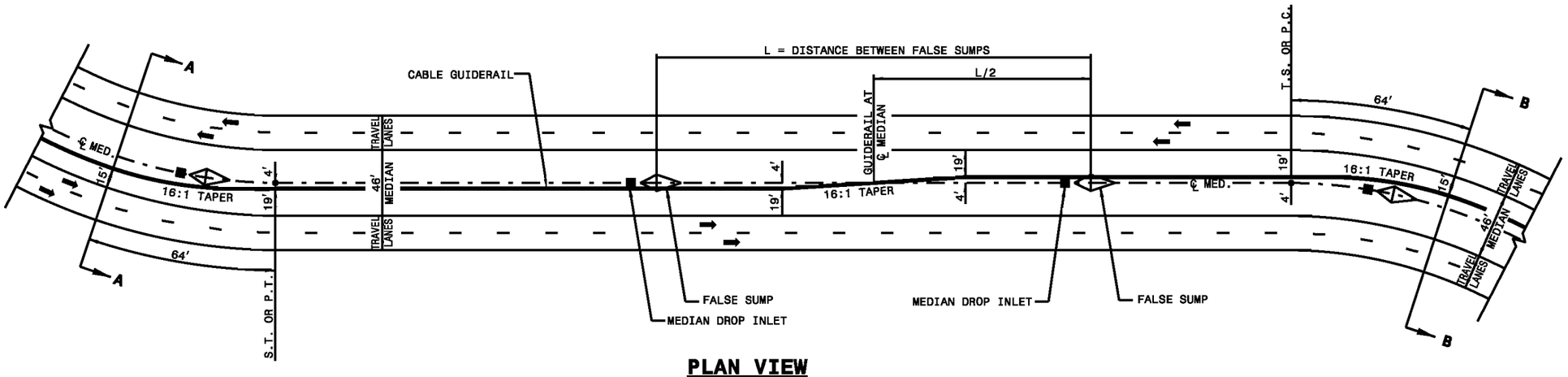

PLAN VIEW

GENERAL NOTES: 1. FALSE SUMP DETAIL IS APPLICABLE TO ALL MEDIAN WIDTHS.
2. DO NOT TRANSITION GUIDERAIL FOR SUPERELEVATION WHEN THE RATE IS 2 PERCENT OR LESS.
3. DO NOT INSTALL GUIDERAIL ON SLOPES STEEPER THAN 6:1.

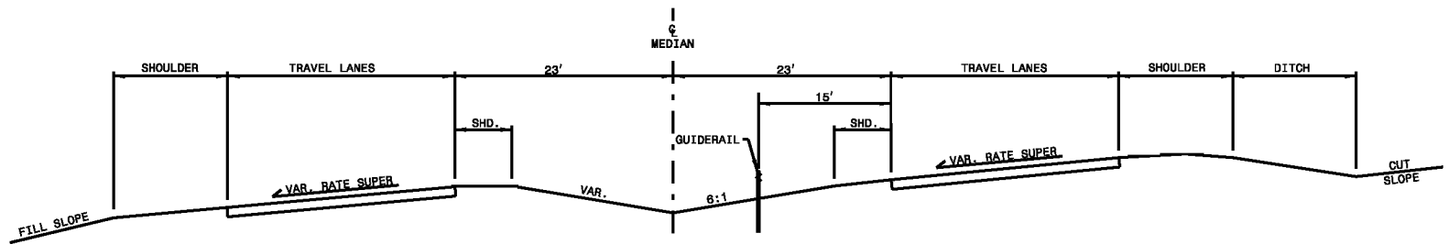

SECTION A-A

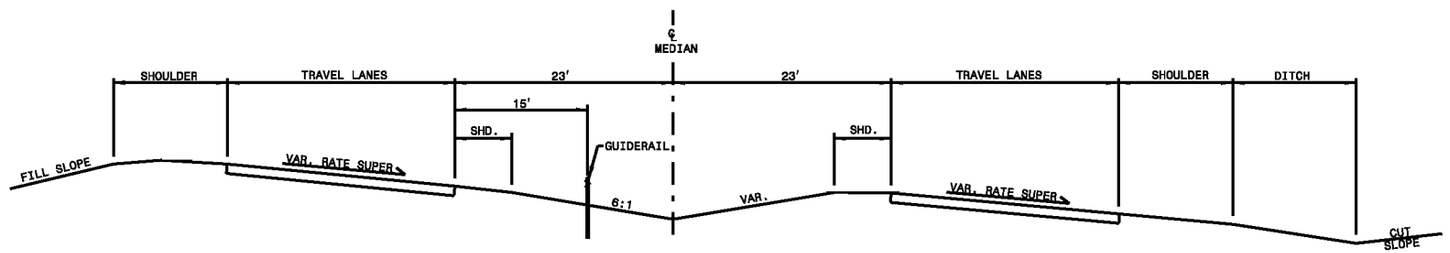

SECTION B-B

46′ MEDIAN GUIDERAIL TRANSITIONS WITH SUPERELEVATION AND/OR FALSE SUMPS

STATE OF
NORTH CAROLINA
DEPT. OF TRANSPORTATION
DIVISION OF HIGHWAYS
RALEIGH, N.C.

1-12

ENGLISH STANDARD DRAWING FOR

CABLE GUIDERAIL

46′ MEDIAN GUIDERAIL TRANSITIONS WITH
SUPERELEVATION AND/OR FALSE SUMPS

SHEET 3 OF 12

865.01

STATE OF
NORTH CAROLINA
DEPT. OF TRANSPORTATION
DIVISION OF HIGHWAYS
RALEIGH, N.C.

1-12

ENGLISH STANDARD DRAWING FOR
CABLE GUIDERAIL
DESIGN AND PLACEMENT

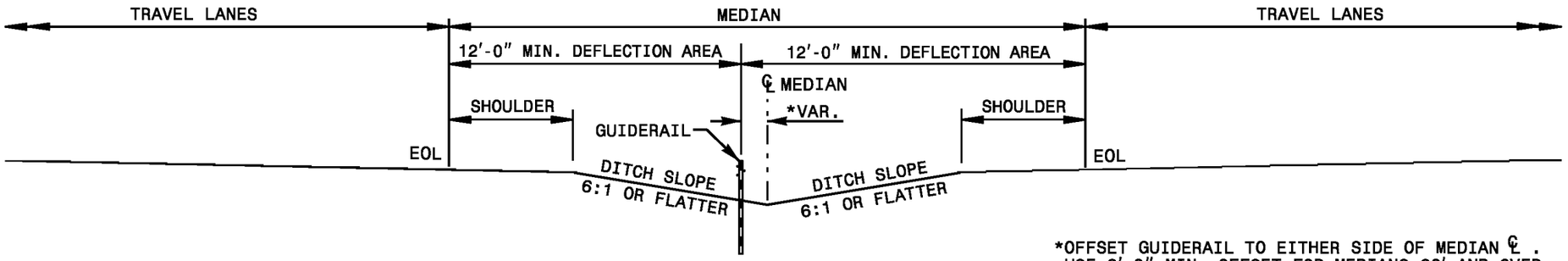

*OFFSET GUIDERAIL TO EITHER SIDE OF MEDIAN ℄ .
USE 8'-0" MIN. OFFSET FOR MEDIANS 60' AND OVER.
USE 4'-0" MIN. OFFSET FOR MEDIANS LESS THAN 60'.

TYPICAL SECTION

(DEFLECTION AREA ON MEDIAN SLOPES)

DOUBLE FACE GUIDERAIL APPLICATION

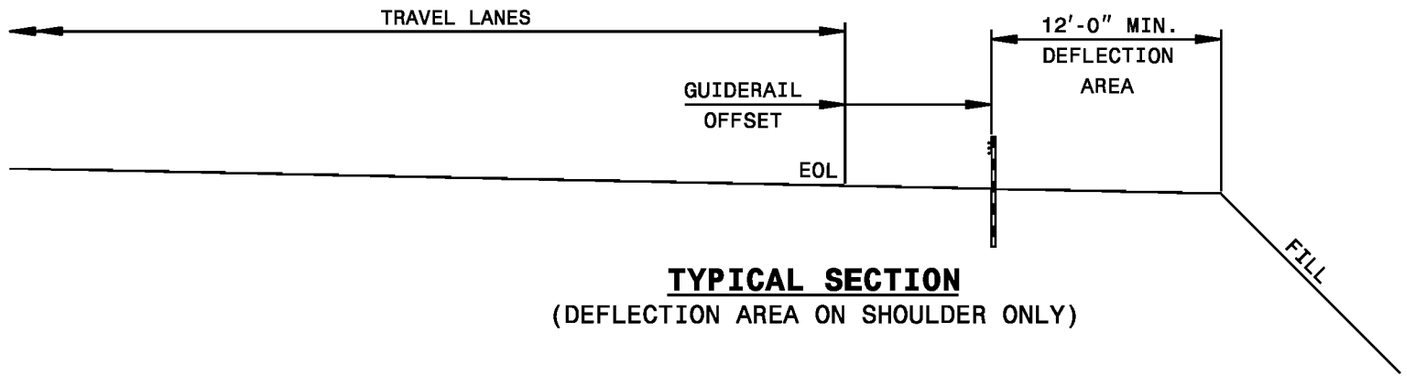

TYPICAL SECTION

(DEFLECTION AREA ON SHOULDER ONLY)

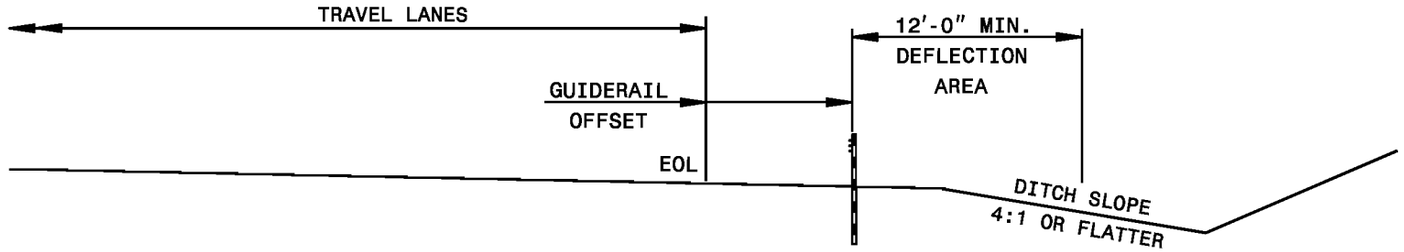

TYPICAL SECTION

(DEFLECTION AREA ON SHOULDER AND DITCH SLOPE)

SINGLE FACE GUIDERAIL APPLICATION

STATE OF
NORTH CAROLINA
DEPT. OF TRANSPORTATION
DIVISION OF HIGHWAYS
RALEIGH, N.C.

1-12

ENGLISH STANDARD DRAWING FOR
CABLE GUIDERAIL
DESIGN AND PLACEMENT

SHEET 4 OF 12
865.01

STATE OF
NORTH CAROLINA
DEPT. OF TRANSPORTATION
DIVISION OF HIGHWAYS
RALEIGH, N.C.

1-12

ENGLISH STANDARD DRAWING FOR

CABLE GUIDERAIL

GUIDERAIL LAYOUT

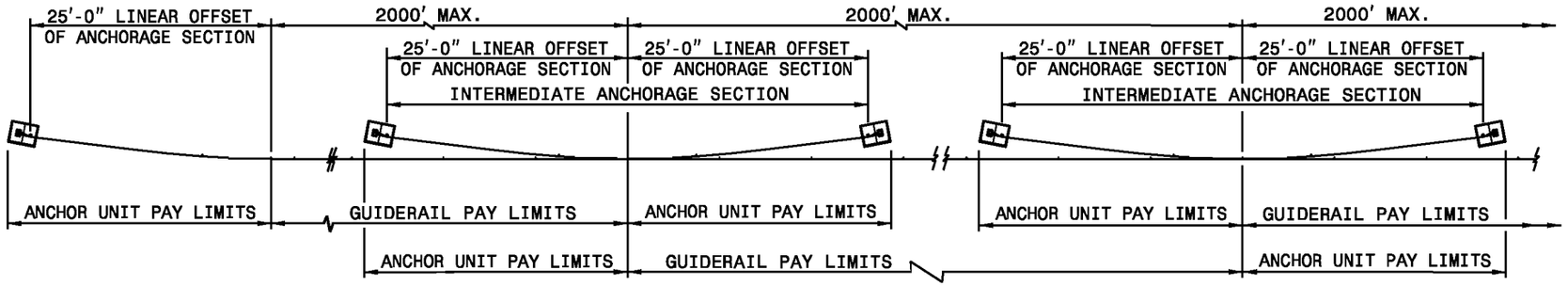

PLAN
TYPICAL LAYOUT

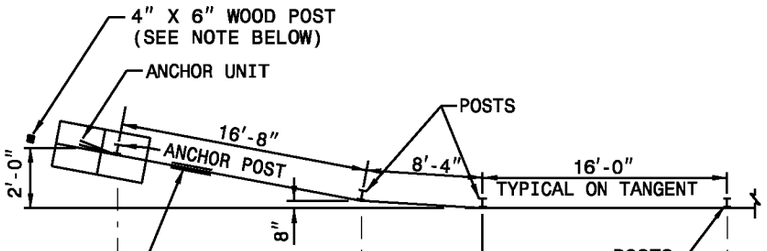

PLAN
TYPICAL APPROACH & TERMINAL SECTIONS

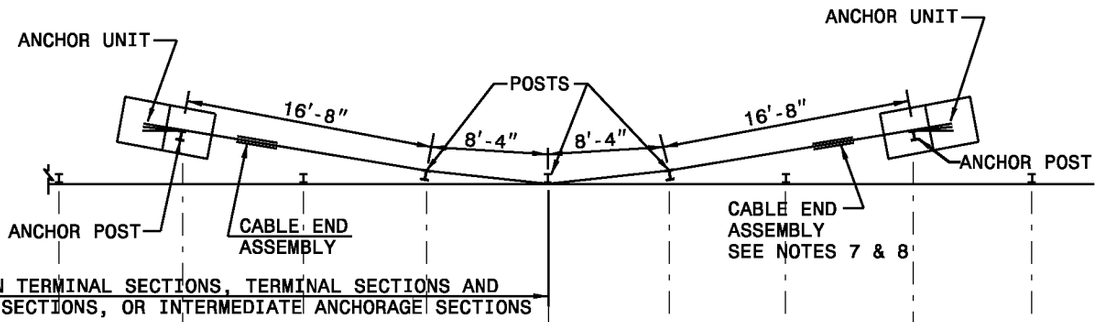

PLAN
TYPICAL INTERMEDIATE ANCHORAGE SECTION

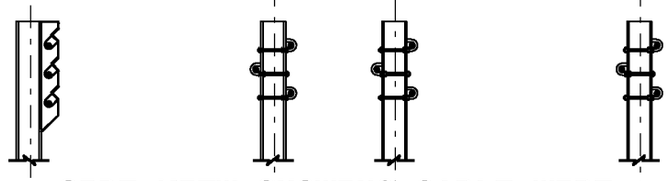

SIDE VIEW SHOWING CABLE WIRE PLACEMENT ON POST

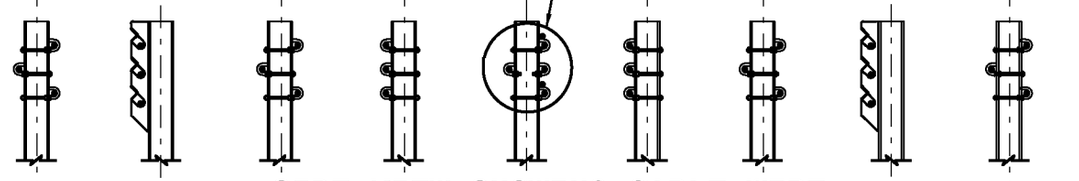

SIDE VIEW SHOWING CABLE WIRE PLACEMENT ON POST

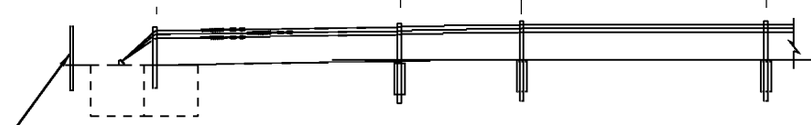

WHEN USED AT A DRIVEWAY OR VEHICLE OPENING ONLY PLACE A 4" X 6" X 5'-4" WOOD POST 30" ABOVE GROUND LINE. PLACE POST 6" AHEAD OF CONCRETE ANCHOR.
*PROVIDE OPENINGS ONLY FOR AREAS AS DESIGNATED ON ROADWAY PLAN SHEETS.

ELEVATION
TYPICAL APPROACH & TERMINAL SECTIONS

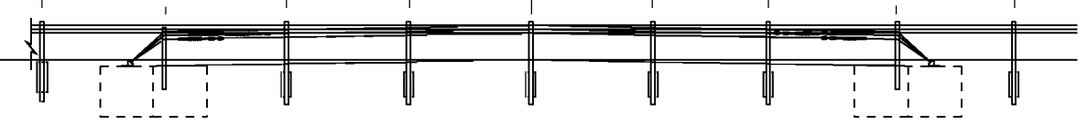

ELEVATION
TYPICAL INTERMEDIATE ANCHORAGE SECTION

STATE OF
NORTH CAROLINA
DEPT. OF TRANSPORTATION
DIVISION OF HIGHWAYS
RALEIGH, N.C.

1-12

ENGLISH STANDARD DRAWING FOR

CABLE GUIDERAIL

GUIDERAIL LAYOUT

SHEET 5 OF 12
865.01

STATE OF
NORTH CAROLINA
DEPT. OF TRANSPORTATION
DIVISION OF HIGHWAYS
RALEIGH, N.C.

1-12

ENGLISH STANDARD DRAWING FOR

CABLE GUIDERAIL

DOUBLE FACE GUIDERAIL - POST DETAILS

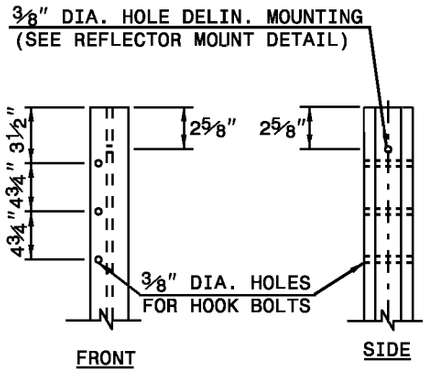

DOUBLE FACE GUIDERAIL POST
HOLE PLACEMENT DETAIL
INTERMEDIATE POST

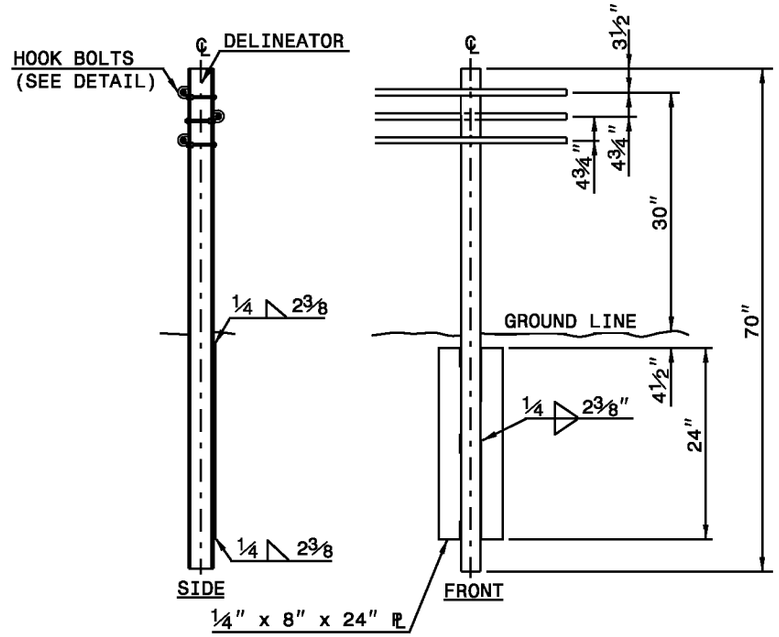

DOUBLE FACE GUIDERAIL
INTERMEDIATE POST

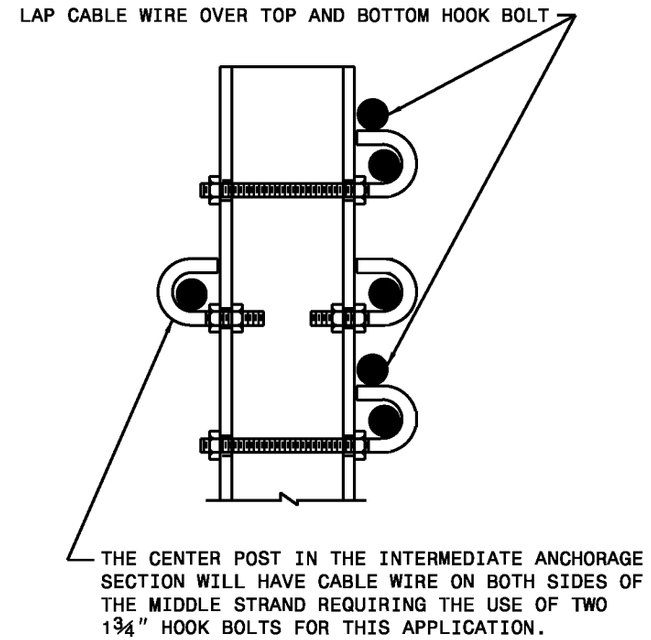

DETAIL "A" CENTER POST
INTERMEDIATE ANCHORAGE SECTION

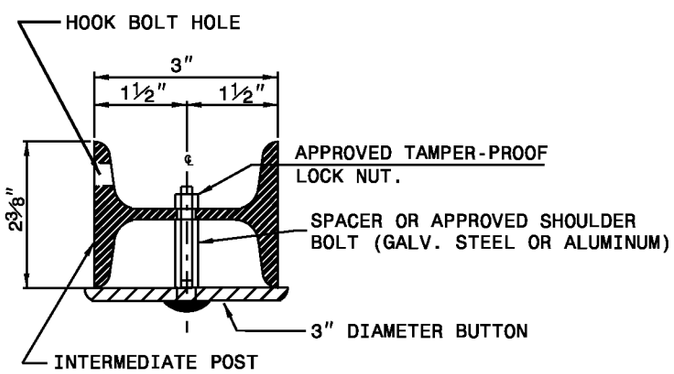

REFLECTOR MOUNT DETAIL
PLAN VIEW

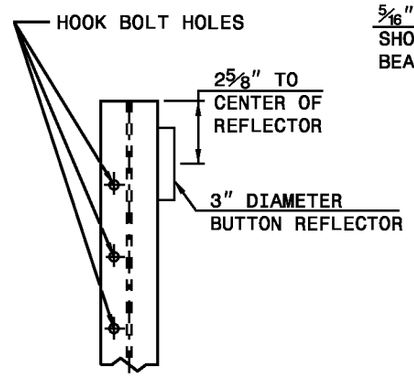

REFLECTOR MOUNT DETAIL
ELEVATION VIEW

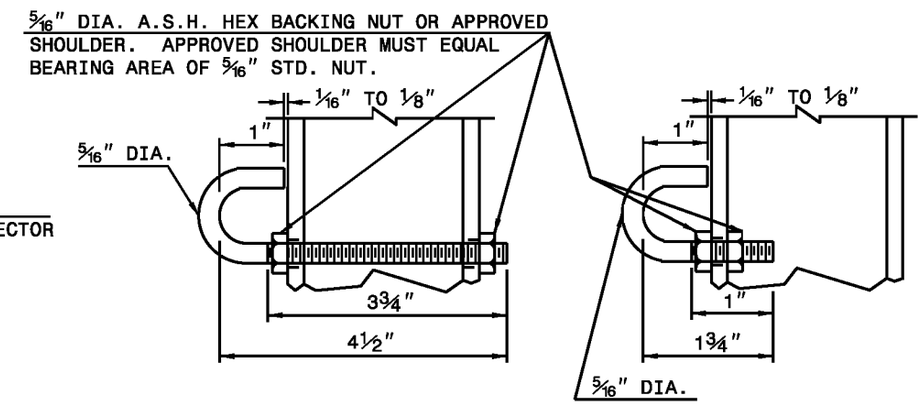

HOOK BOLT (ALTERNATES)

SHEET 6 OF 12

865.01

STATE OF
NORTH CAROLINA
DEPT. OF TRANSPORTATION
DIVISION OF HIGHWAYS
RALEIGH, N.C.

1-12

ENGLISH STANDARD DRAWING FOR

CABLE GUIDERAIL

DOUBLE FACE GUIDERAIL - POST DETAILS

SHEET 6 OF 12

865.01

STATE OF
NORTH CAROLINA
DEPT. OF TRANSPORTATION
DIVISION OF HIGHWAYS
RALEIGH, N.C.

1-12

ENGLISH STANDARD DRAWING FOR

CABLE GUIDERAIL

SINGLE FACE GUIDERAIL - POST DETAILS

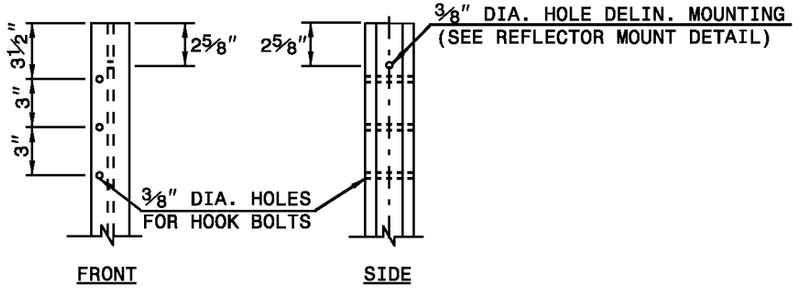

SINGLE FACE GUIDERAIL POST
HOLE PLACEMENT DETAIL

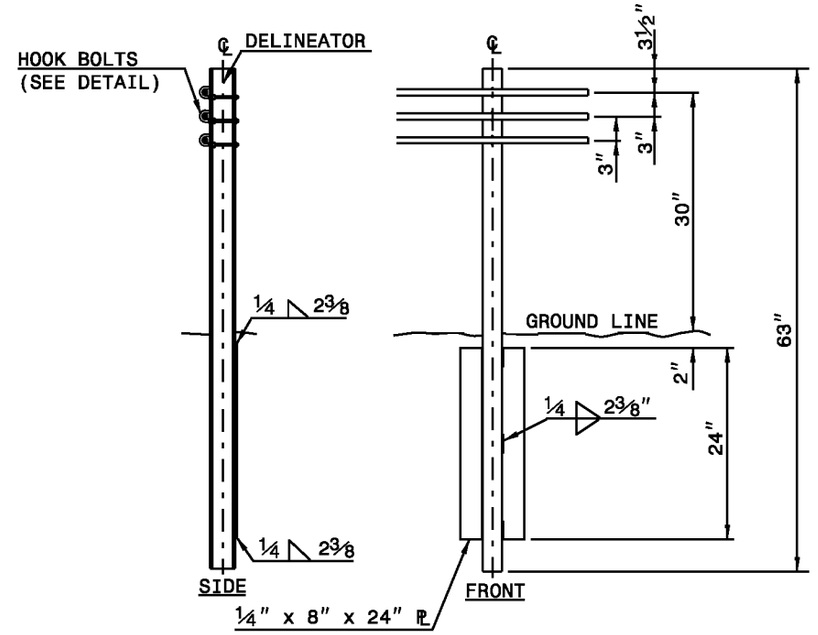

SINGLE FACE GUIDERAIL
INTERMEDIATE POST

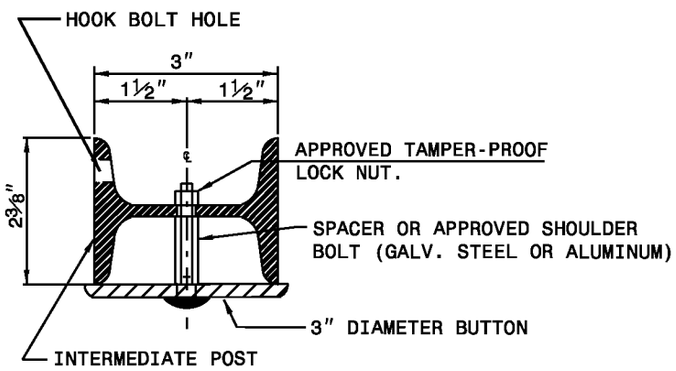

REFLECTOR MOUNT DETAIL
PLAN VIEW

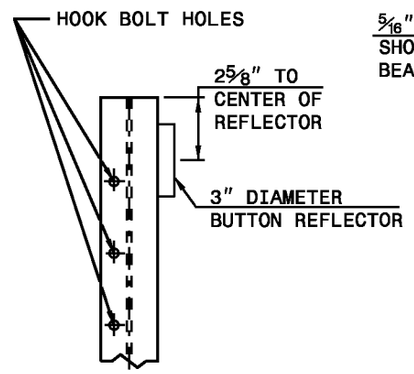

REFLECTOR MOUNT DETAIL
ELEVATION VIEW

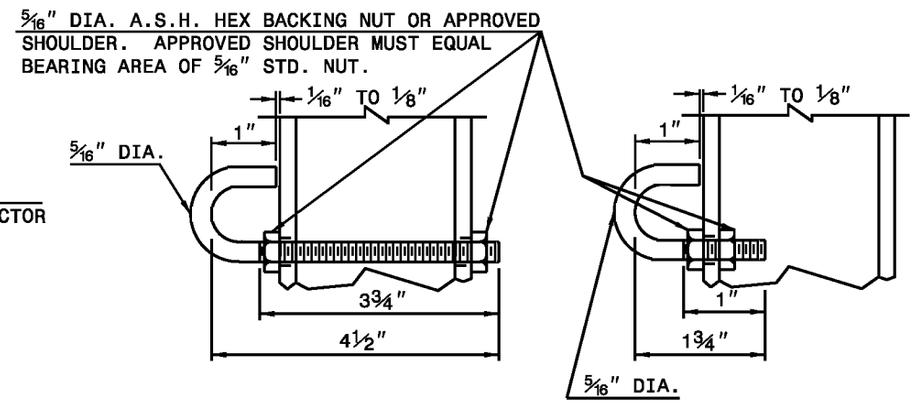

HOOK BOLT (ALTERNATES)

SHEET 7 OF 12

865.01

STATE OF
NORTH CAROLINA
DEPT. OF TRANSPORTATION
DIVISION OF HIGHWAYS
RALEIGH, N.C.

1-12

ENGLISH STANDARD DRAWING FOR

CABLE GUIDERAIL

SINGLE FACE GUIDERAIL - POST DETAILS

SHEET 7 OF 12

865.01

STATE OF
NORTH CAROLINA
DEPT. OF TRANSPORTATION
DIVISION OF HIGHWAYS
RALEIGH, N.C.

1-12

ENGLISH STANDARD DRAWING FOR

CABLE GUIDERAIL

ANCHOR POST DETAILS

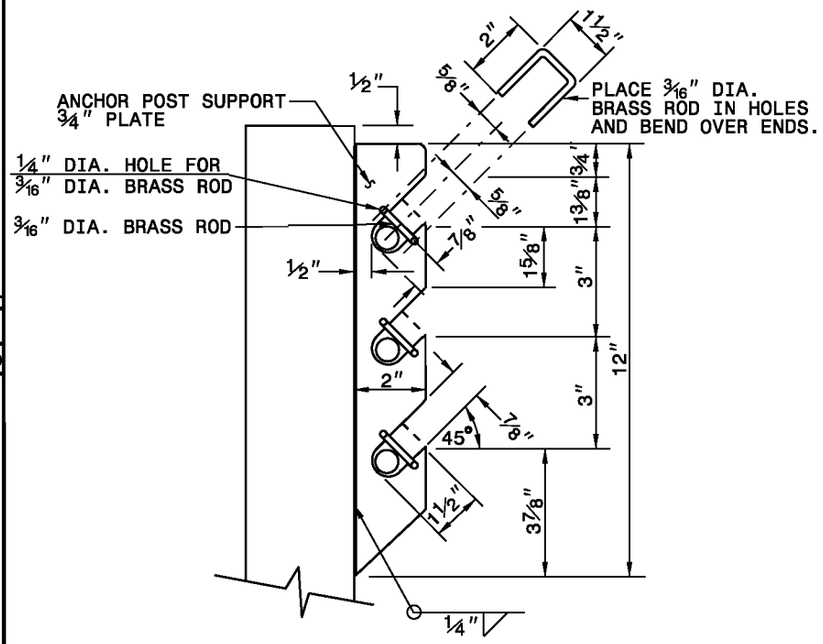

SIDE VIEW OF POST TOP

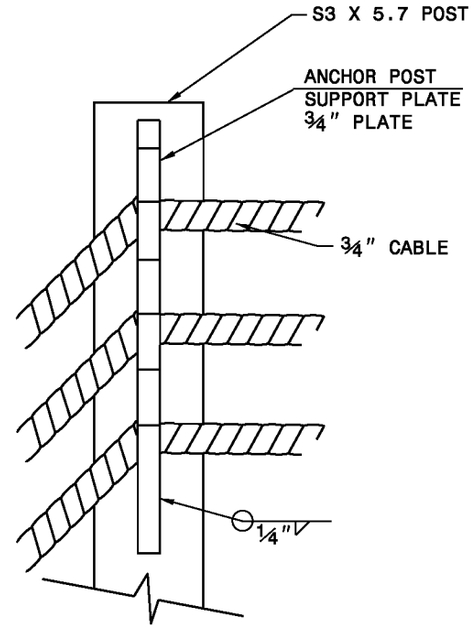

FRONT VIEW OF POST TOP

(ROAD SIDE)

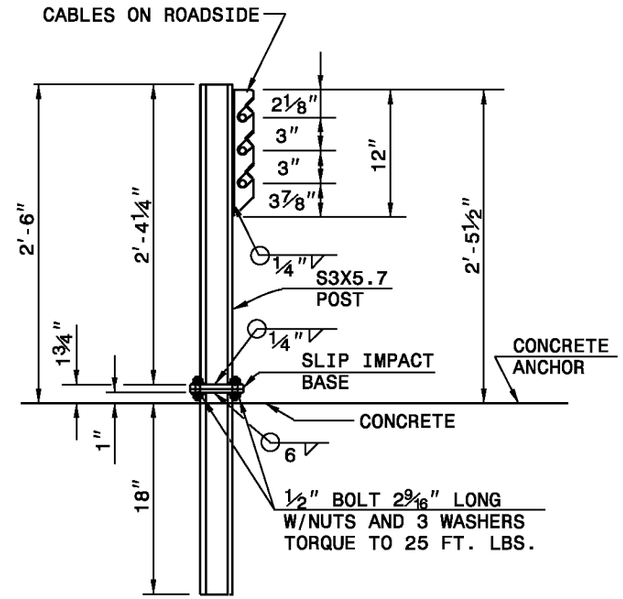

ANCHOR POST DETAIL

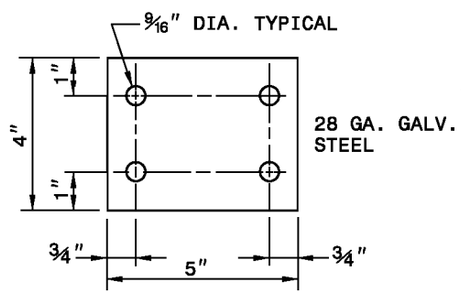

KEEPER PLATE

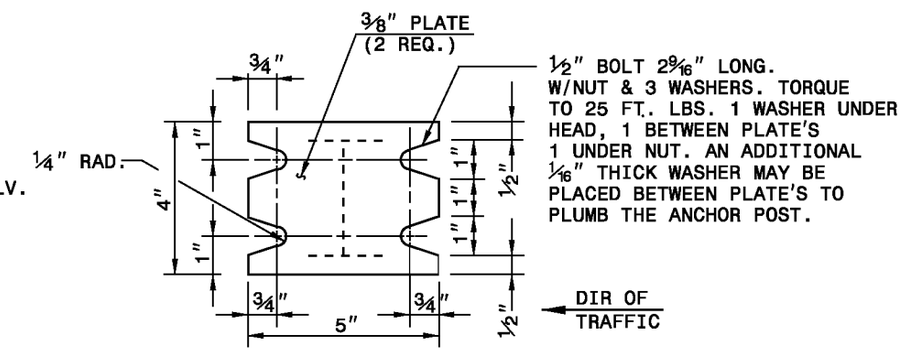

SLIP IMPACT BASE

(KEEPER PLATE NOT SHOWN)

SHEET 8 OF 12

865.01

STATE OF
NORTH CAROLINA
DEPT. OF TRANSPORTATION
DIVISION OF HIGHWAYS
RALEIGH, N.C.

1-12

ENGLISH STANDARD DRAWING FOR

CABLE GUIDERAIL

ANCHOR POST DETAILS

SHEET 8 OF 12

865.01

STATE OF
NORTH CAROLINA
DEPT. OF TRANSPORTATION
DIVISION OF HIGHWAYS
RALEIGH, N.C.

1-12

ENGLISH STANDARD DRAWING FOR
CABLE GUIDERAIL
ANCHOR DETAILS

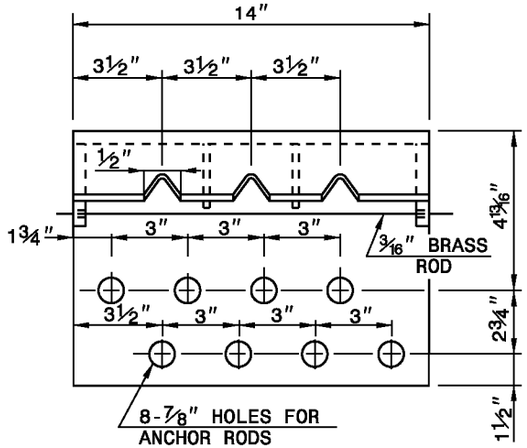

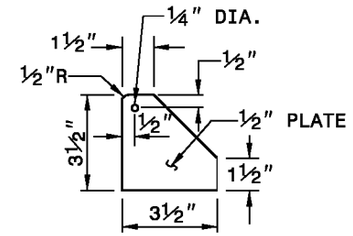

EXTERNAL STIFFENER PLATE

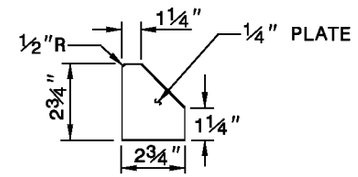

INTERNAL STIFFENER PLATE

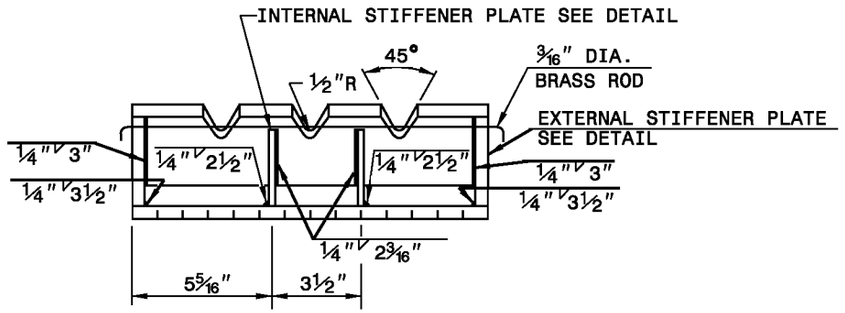

ANCHOR ANGLE DETAILS

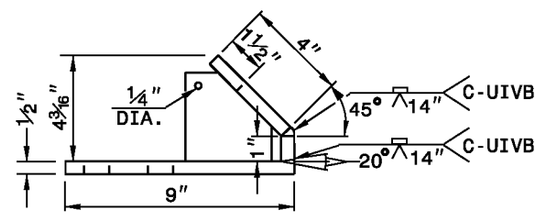

NOTE: SUBMIT ALTERNATE METHODS OF FABRICATING ANCHOR ANGLES FOR APPROVAL.

BREAKAWAY ANCHOR ANGLE

STATE OF
NORTH CAROLINA
DEPT. OF TRANSPORTATION
DIVISION OF HIGHWAYS
RALEIGH, N.C.

1-12

ENGLISH STANDARD DRAWING FOR
CABLE GUIDERAIL
ANCHOR DETAILS

SHEET 9 OF 12
865.01

STATE OF
NORTH CAROLINA
DEPT. OF TRANSPORTATION
DIVISION OF HIGHWAYS
RALEIGH, N.C.

1-12

ENGLISH STANDARD DRAWING FOR
CABLE GUIDERAIL
ANCHOR DETAILS

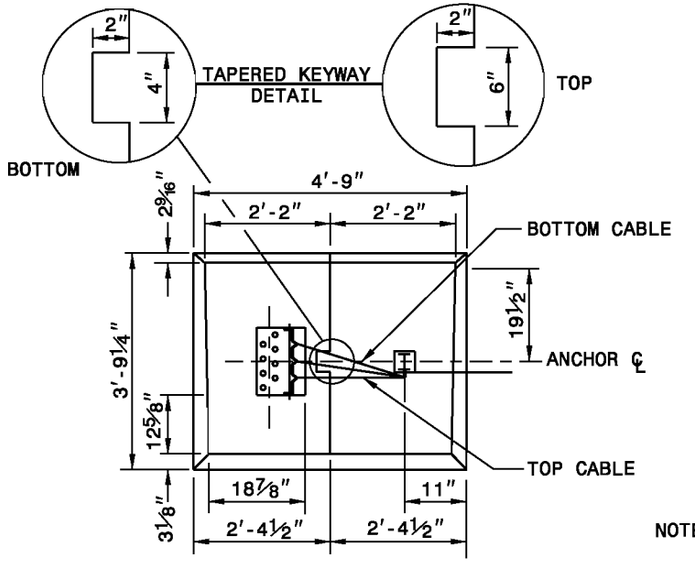

ANCHOR UNIT DETAIL
TOP VIEW LEFT HAND
(REINFORCEMENT NOT SHOWN)
TWO PIECE

NOTE: USE ONE OR TWO PIECE ANCHOR. DIMENSIONS OF TWO PIECE ANCHOR ARE SHOWN ON DRAWING. DIMENSIONS OF ONE PIECE ANCHOR ARE 5'-0" LONG BY 3'-0" WIDE BY 3'-4" HIGH.

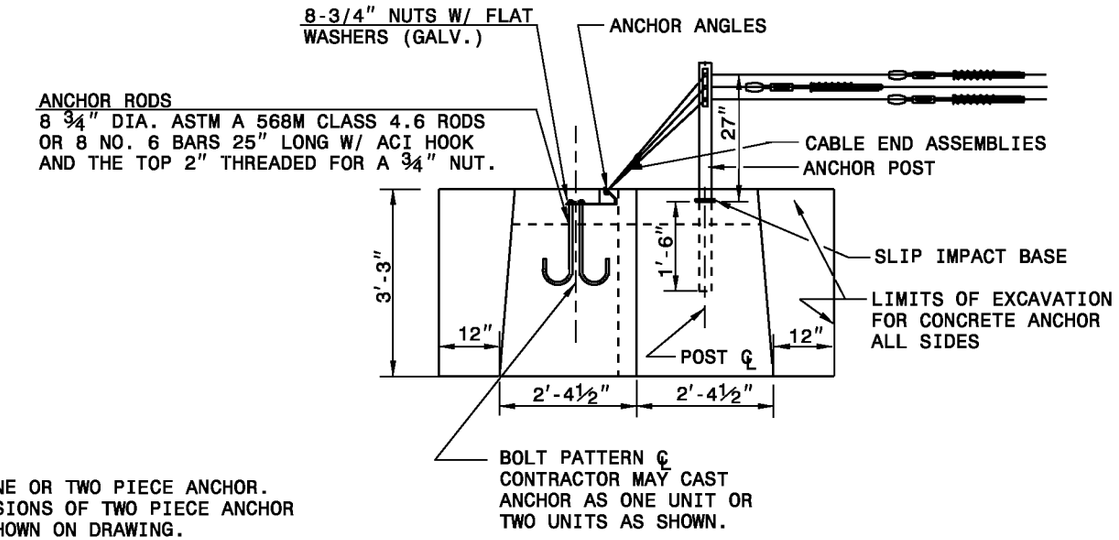

ANCHOR UNIT DETAIL
LEFT HAND
(REINFORCEMENT NOT SHOWN)

NOTE: SET THE CONCRETE ANCHOR INTO THE EXCAVATION AS DETAILED. THE BOTTOM OF THE ANCHOR MUST HAVE A FULL AND EVEN BEARING ON THE SURFACE UNDER IT SO THAT IF THE CONTRACTOR ELECTS TO PLACE THE ANCHOR IN TWO SECTIONS, THERE WILL BE LITTLE OR NO DIFFERENTIAL SETTLEMENT. IF THE CONTRACTOR ELECTS TO PLACE THE ANCHOR IN TWO SECTIONS, PLACE THE TOPS OF BOTH SECTIONS ON THE SAME PLANE. AFTER THE ANCHOR IS IN PLACE, BACKFILL THE EXCAVATION.

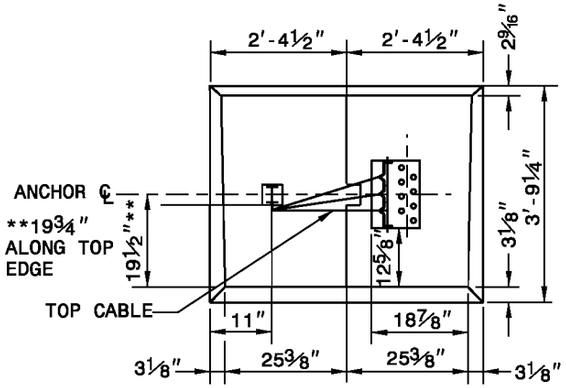

ANCHOR UNIT DETAIL
TOP VIEW RIGHT HAND
(REINFORCEMENT NOT SHOWN)
TWO PIECE

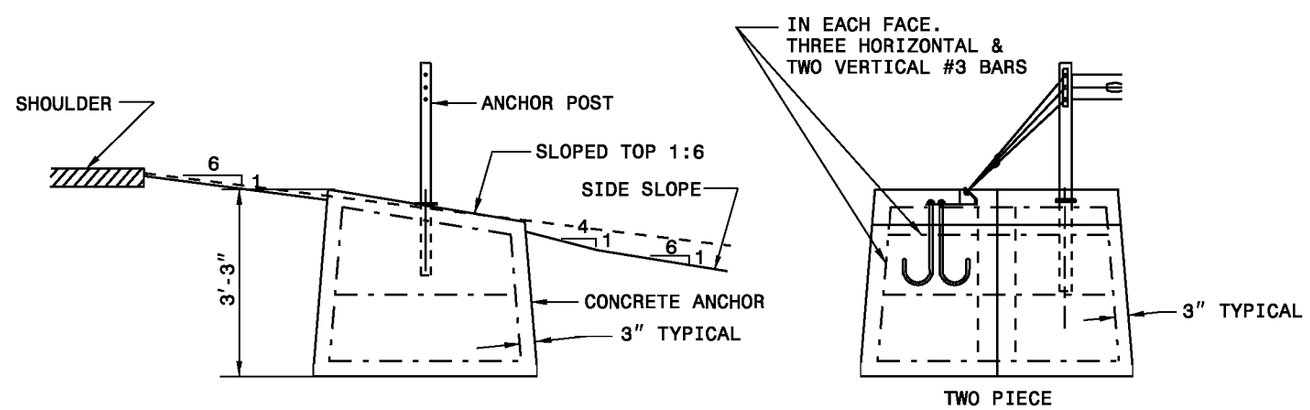

ANCHOR UNIT & RE-BAR INSTALLATION DETAIL

STATE OF
NORTH CAROLINA
DEPT. OF TRANSPORTATION
DIVISION OF HIGHWAYS
RALEIGH, N.C.

1-12

ENGLISH STANDARD DRAWING FOR
CABLE GUIDERAIL
ANCHOR DETAILS

SHEET 10 OF 12
865.01

STATE OF NORTH CAROLINA
DEPT. OF TRANSPORTATION
DIVISION OF HIGHWAYS
RALEIGH, N.C.

1-12

ENGLISH STANDARD DRAWING FOR

CABLE GUIDERAIL

ANCHOR DETAILS

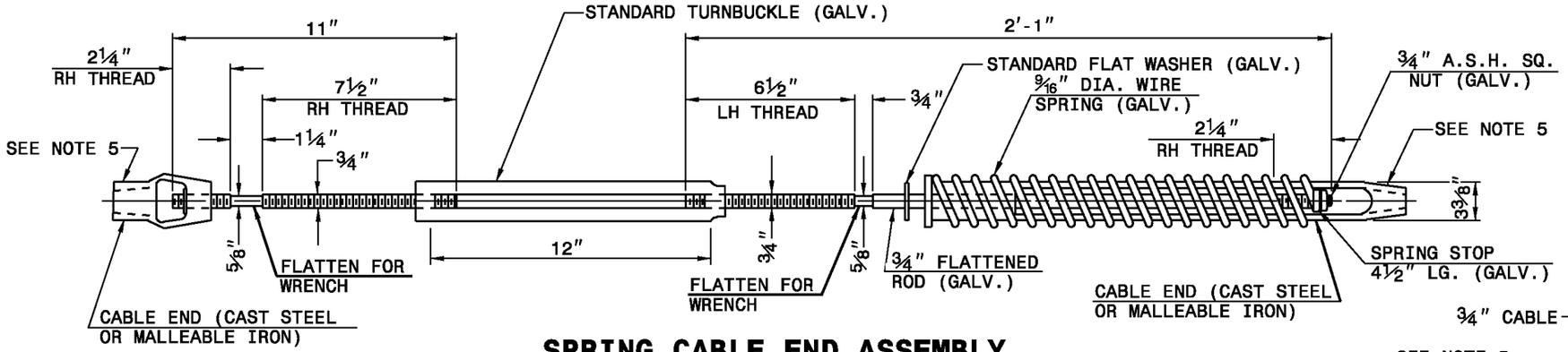

SPRING CABLE END ASSEMBLY (COMPENSATING DEVICE)

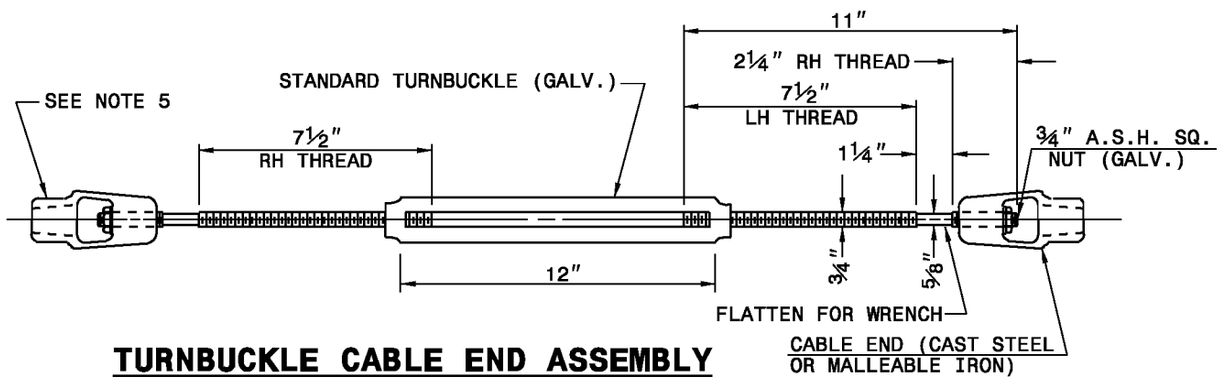

TURNBUCKLE CABLE END ASSEMBLY

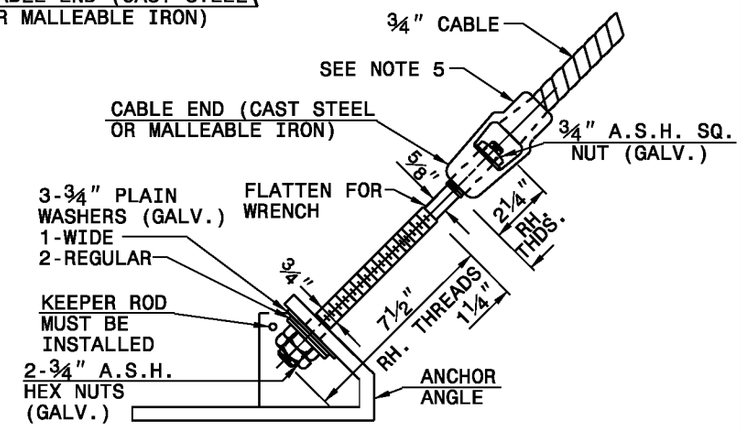

CABLE END ASSEMBLY TO ANCHOR ANGLE DETAIL

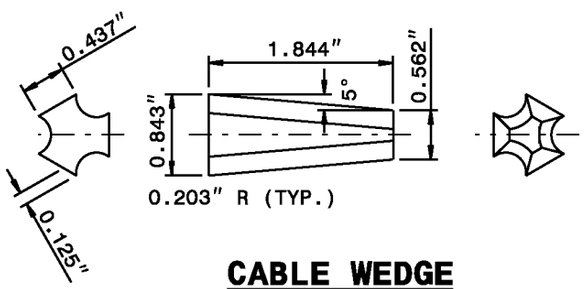

CABLE WEDGE

TYPICAL WEDGE FOR ALL SPLICES AND CABLE FITTINGS

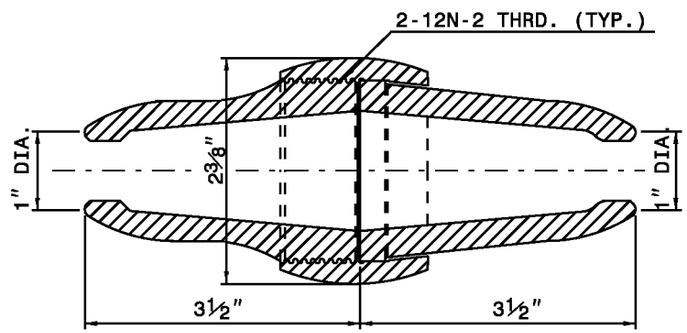

CABLE SPLICE

NOTE: USE WITH WEDGE

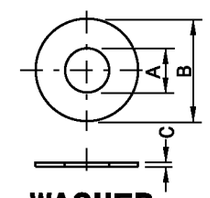

WASHER

WASHER	WASHER SERIES	A INSIDE DIA.	B OUTSIDE DIA.	C THICKNESS
¾"	REGULAR	⅞"	2"	5/32"
	WIDE	⅞"	2 9/16"	3/16"
½"	NARROW	17/32"	1"	3/32"

SHEET 11 OF 12

865.01

STATE OF NORTH CAROLINA
DEPT. OF TRANSPORTATION
DIVISION OF HIGHWAYS
RALEIGH, N.C.

1-12

ENGLISH STANDARD DRAWING FOR

CABLE GUIDERAIL

ANCHOR DETAILS

SHEET 11 OF 12

865.01

STATE OF NORTH CAROLINA
DEPT. OF TRANSPORTATION
DIVISION OF HIGHWAYS
RALEIGH, N.C.

1-12

ENGLISH STANDARD DRAWING FOR

CABLE GUIDERAIL

NOTES

GENERAL NOTES:

1. PROVIDE ALL S3x5.7 ROLLED STEEL SECTIONS IN ACCORDANCE WITH ASTM A-6. USE POSTS, PLATES AND ANCHOR ANGLES CONFORMING TO THE REQUIREMENTS OF SECTION 862 OF THE STANDARD SPECIFICATIONS. WHERE THE RAIL IS PARALLEL TO THE EDGE OF THE TRAVEL LANE, REFLECTORIZE EVERY 6th POST (96′) (SEE STANDARD 1261.02 FOR DELINEATORS). FOR DOUBLE FACE GUIDERAIL, PLACE DELINEATOR VISIBLE ON EVERY 6th POST TO TRAFFIC IN EITHER DIRECTION. DO NOT REFLECTORIZE POSTS IN THE TYPICAL INTERMEDIATE ANCHORAGE SECTION, TYPICAL APPROACH OR TERMINAL SECTIONS.

2. PROVIDE ROUND ¾″ DIAMETER ZINC COATED CABLE WIRE CONSTRUCTED OF THREE STRANDS (7 WIRES PER STRAND) HAVING A MINIMUM TENSILE STRENGTH OF 25000 LBS. IN ACCORDANCE WITH AASHTO M-30 TYPE I CABLE, CLASS 'A' COATING.

3. PROVIDE MATERIALS INDICATED AS 'CAST STEEL' WHICH CONFORM TO AASHTO M103.

4. PROVIDE INSTALLED HOOK BOLTS WHICH DEVELOP AN ULTIMATE PULL OPEN STRENGTH OF 500 LBS TO 1000 LBS. APPLIED IN A DIRECTION NORMAL TO THE LONGITUDINAL AXIS OF THE POST.

5. DESIGN ALL FITTINGS, INCLUDING SPLICES, TO USE THE CABLE WEDGE AND DEVELOP THE FULL STRENGTH OF THE ¾″ CABLE. HOT DIP GALVANIZE ALL FITTINGS, EXCEPT THE CABLE WEDGE, ACCORDANCE WITH AASHTO M-30.

6. CRIMP ONE WIRE OF THE WIRE ROPE OVER THE BASE OF THE WEDGE TO HOLD IT FIRMLY IN PLACE AT ALL LOCATIONS WHERE THE CABLE IS CONNECTED TO A CABLE SPLICE CONNECTION.

7. DESIGNS FOR A COMBINATION OR SINGLE UNIT COMPENSATING DEVICE AND TURNBUCKLE ASSEMBLY MAY BE SUMBITTED FOR APPROVAL. COMPENSATING DEVICES MUST HAVE A SPRING RATE OF 450 LBS. PLUS OR MINUS 50 LBS. PER INCH WITH A MINIMUM TOTAL 'THROW' OF 6″.

8. APPLY THE FOLLOWING CRITERIA FOR ARRANGEMENT OF SPRING CABLE END ASSEMBLIES (COMPENSATING DEVICES) AND TURNBUCKLE CABLE END ASSEMBLIES:

   LENGTH OF CABLE RUNS:

   TO 1000′ - USE COMPENSATING DEVICE ON ONE END AND TURNBUCKLE ON THE OTHER END OF EACH INDIVIDUAL CABLE.

   1000′ TO 2000′ - USE COMPENSATING DEVICE ON EACH END OF EACH CABLE.

   OVER 2000′ - START NEW STRETCH BY INTERLACING AT LAST PARALLEL POST (TYPICAL LAYOUT).

   PRIOR TO FINAL ACCEPTANCE BY THE STATE, USE THE FOLLOWING VALUES TO TIGHTEN THE TURNBUCKLES BASED ON THE TEMPERATURE AT THE TIME OF ADJUSTMENT.

TABLE "A"

PAVEMENT ℄ CURVATURE	POST SPACING
8° OR LESS	16′
MORE THAN 8° TO 13° (440 FT. RAD.)	12′

TEMPERATURE (FAHRENHEIT)	SPRING COMPRESSION FROM UNLOADED POSITION IN EACH SPRING
110° - 120°	1″
100° - 109°	1¼″
90° - 99°	1½″
80° - 89°	1¾″
70° - 79°	2″
60° - 69°	2¼″
50° - 59°	2½″
40° - 49°	2¾″
30° - 39°	3″
20° - 29°	3¼″
10° - 19°	3½″
0° - 9°	3¾″
-10° - -1°	4″
-20° - -11°	4¼″

STATE OF NORTH CAROLINA
DEPT. OF TRANSPORTATION
DIVISION OF HIGHWAYS
RALEIGH, N.C.

1-12

ENGLISH STANDARD DRAWING FOR

CABLE GUIDERAIL

NOTES

SHEET 12 OF 12

865.01

STATE OF
NORTH CAROLINA
DEPT. OF TRANSPORTATION
DIVISION OF HIGHWAYS
RALEIGH, N.C.

1-12

ENGLISH STANDARD DRAWING FOR

CHAIN LINK FENCE

4', 5' AND 6' HIGH FENCE

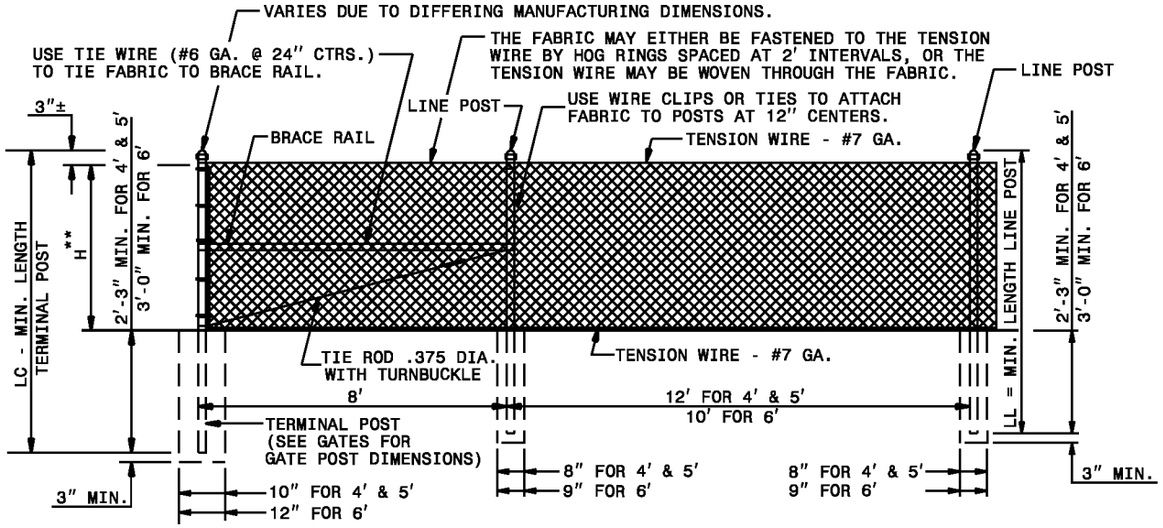

**"H" IS THE HEIGHT OF FENCE. SEE PAY ITEM DESCRIPTION FOR REQ'D HEIGHT FOR PROJECT.

NOTE: ROLL FORMED LINE POST MAY BE DRIVEN TO A MINIMUM OF 3'-0" IN LIEU OF CONCRETE ANCHOR, UNLESS OTHERWISE DIRECTED BY THE ENGINEER.

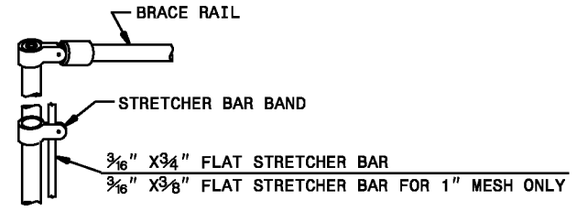

GATE OR TERMINAL POST WITH STRETCHER BAR ATTACHMENT

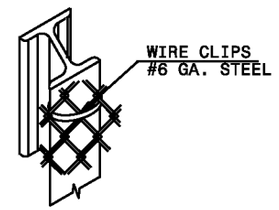

METHOD OF TYING FABRIC TO "H" POST

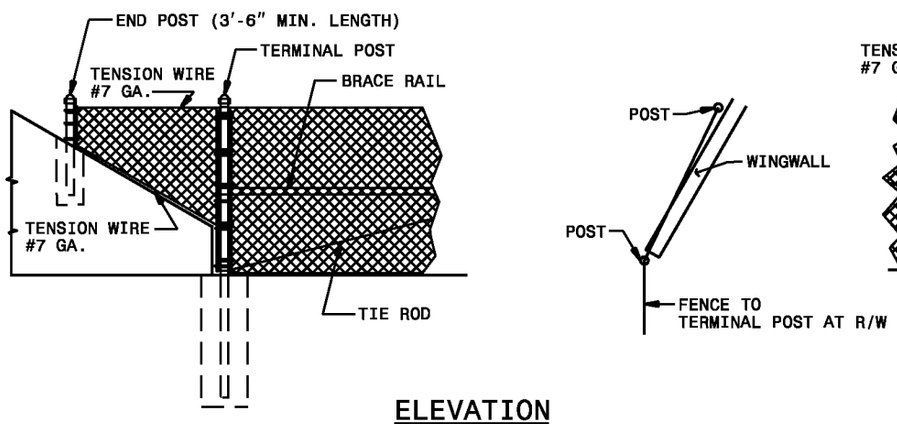

ELEVATION

METHOD OF TYING FENCE TO ENDWALL

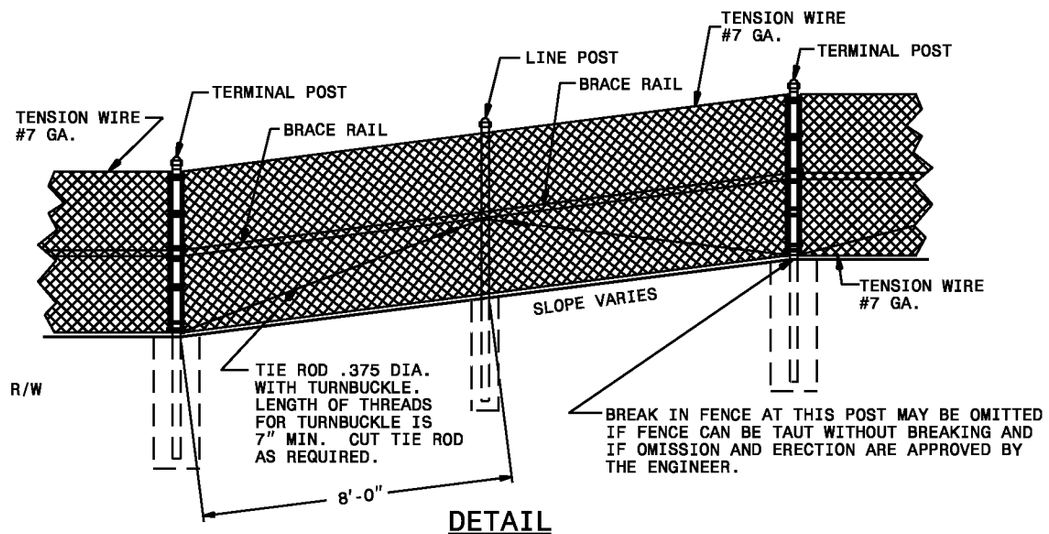

DETAIL

METHOD OF CONSTRUCTING FENCE ON SHARP BREAK IN GRADE

NOTES:
CAPS ARE REQUIRED ON PIPE POST. CAPS ARE NOT REQUIRED ON "H" POST OR ROLL FORMED POST. INSTALL FENCE FABRIC ON THE SIDE FARTHEST FROM THE HIGHWAY EXCEPT THAT ON HORIZONTAL CURVES GREATER THAN THREE DEGREES, INSTALL THE FENCE TO PULL AGAINST LINE POST. CONSIDER ALL CHANGES IN DIRECTION OF FENCE LINE OF 30° OR MORE AS CORNERS.

STATE OF
NORTH CAROLINA
DEPT. OF TRANSPORTATION
DIVISION OF HIGHWAYS
RALEIGH, N.C.

1-12

ENGLISH STANDARD DRAWING FOR

CHAIN LINK FENCE

4', 5' AND 6' HIGH FENCE

SHEET 1 OF 3
866.01

STATE OF
NORTH CAROLINA
DEPT. OF TRANSPORTATION
DIVISION OF HIGHWAYS
RALEIGH, N.C.

1-12

ENGLISH STANDARD DRAWING FOR

CHAIN LINK FENCE

4', 5' AND 6' HIGH FENCE

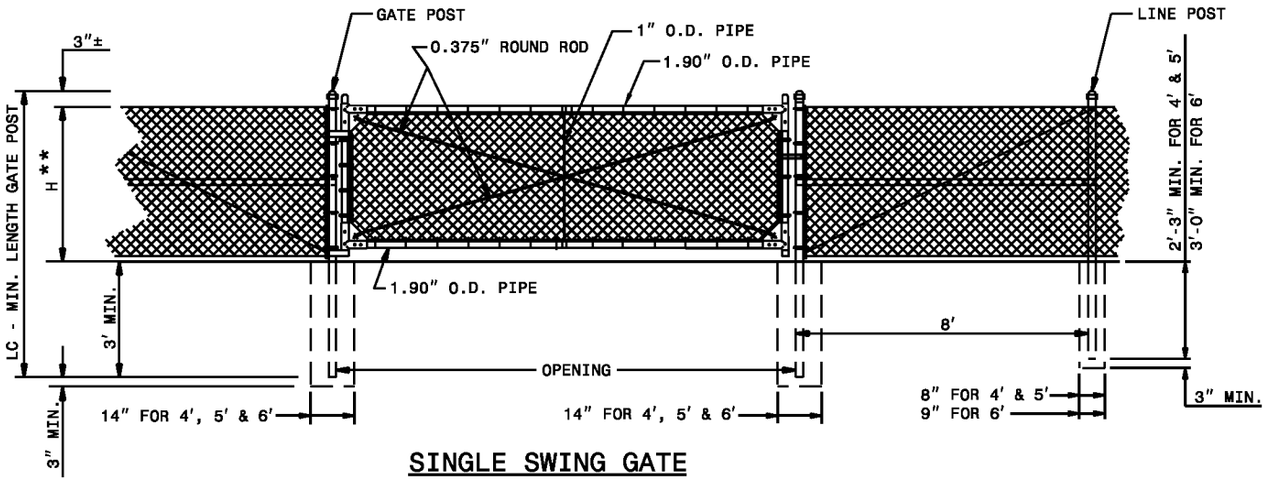

SINGLE SWING GATE

NOTE:
FENCE HARDWARE VARIES DUE TO
DIFFERING MANUFACTURES SUPPLIES.

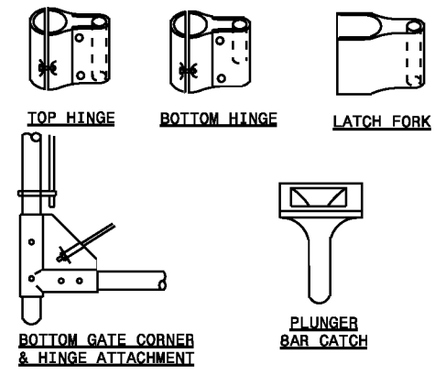

**"H" IS THE HEIGHT OF FENCE. SEE PAY ITEM DESCRIPTION FOR REQ'D HEIGHT FOR PROJECT.

NOTE: ROLL FORMED LINE POST MAY BE DRIVEN TO A MINIMUM OF 3'-0" IN LIEU OF CONCRETE ANCHOR, UNLESS OTHERWISE DIRECTED BY THE ENGINEER.

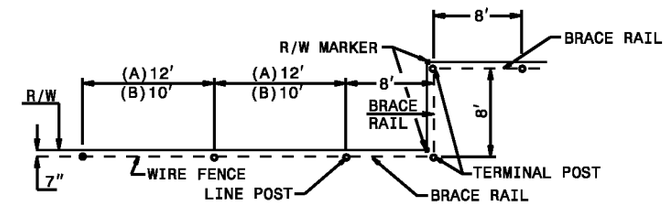

PLAN

PLACEMENT OF FENCE ALONG RIGHT OF WAY
(BRACE ALL TERMINAL POSTS AS SHOWN ABOVE)

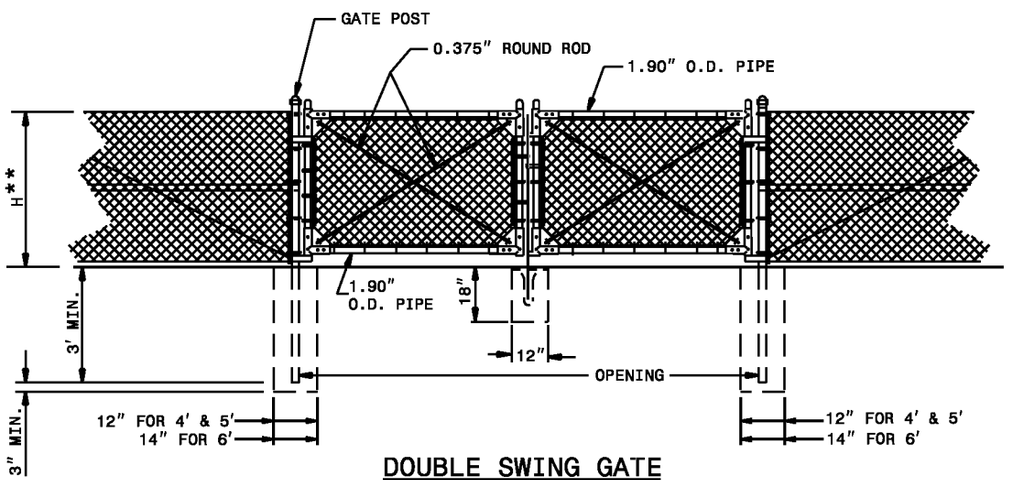

DOUBLE SWING GATE

USE WHERE SWINGING CLEARANCE IS LIMITED

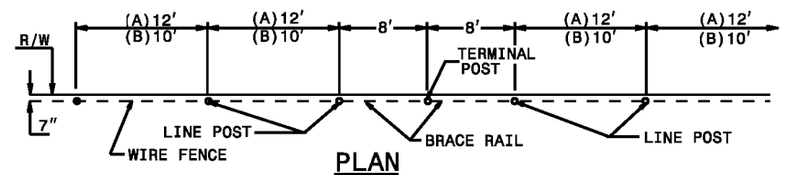

PLAN

(LINE POST/TERMINAL POST SEQUENCE)

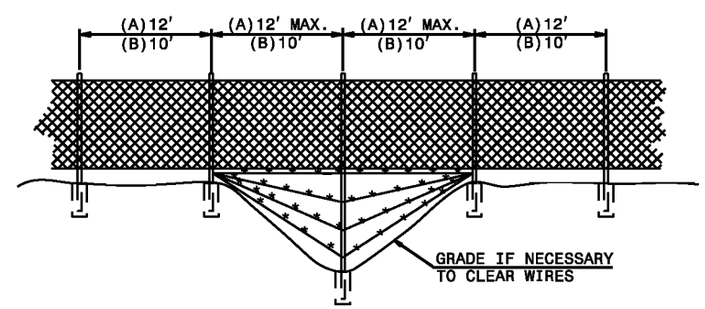

DETAIL OF DITCH CROSSING

MAXIMUM WIRE SPACING TO BE 6".
MAXIMUM CLEARANCE BETWEEN LOWEST STRAND AND GROUND TO BE 6".
ERECT BRACE RAILS BETWEEN TERMINAL OR GATE POSTS AT INTERVALS NOT EXCEEDING 700' ON TANGENTS OR 350' ON SHORT RADIUS CURVES.
ERECT ADDTIONAL TERMINAL POSTS IF DIRECTED BY THE ENGINEER.
BRACE TERMINAL POSTS FROM BOTH SIDES OF POST.

SHEET 2 OF 3

866.01

STATE OF
NORTH CAROLINA
DEPT. OF TRANSPORTATION
DIVISION OF HIGHWAYS
RALEIGH, N.C.

1-12

ENGLISH STANDARD DRAWING FOR

CHAIN LINK FENCE

4', 5' AND 6' HIGH FENCE

SHEET 2 OF 3

866.01

STATE OF
NORTH CAROLINA
DEPT. OF TRANSPORTATION
DIVISION OF HIGHWAYS
RALEIGH, N.C.

1-12

ENGLISH STANDARD DRAWING FOR

CHAIN LINK FENCE

4', 5' AND 6' HIGH FENCE

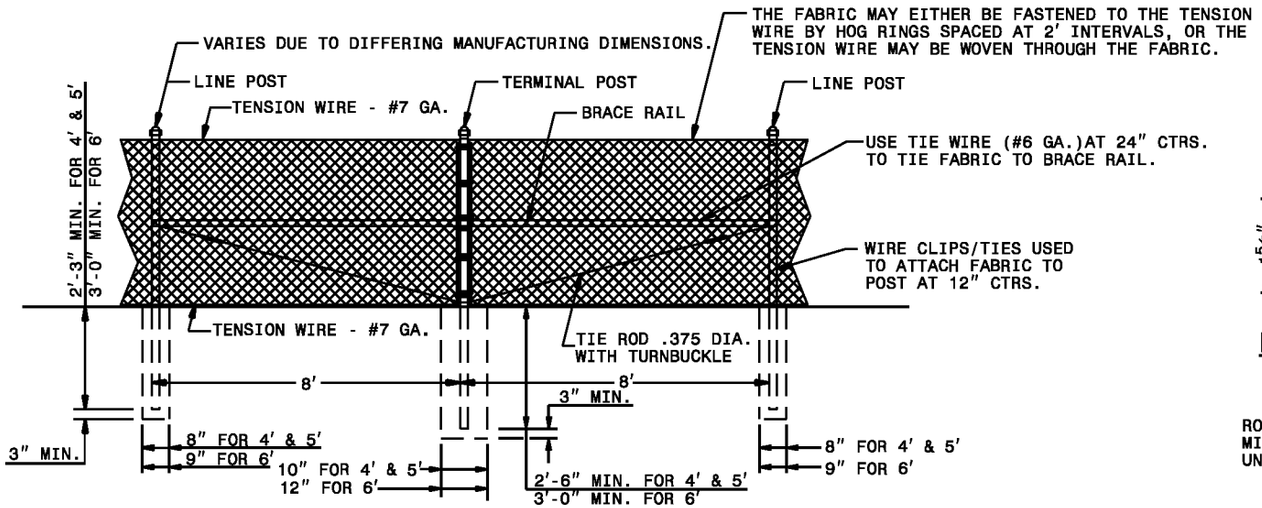

LINE BRACE DETAIL

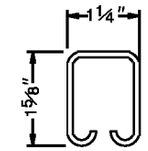

BRACE RAIL
(ROLL FORMED)

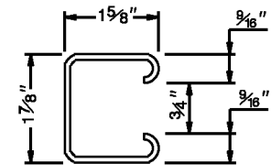

LINE POST
(ROLL FORMED)

ROLL FORMED LINE POST MAY BE DRIVEN TO A MINIMUM OF 3'-0" IN LIEU OF CONCRETE ANCHOR, UNLESS OTHERWISE DIRECTED BY THE ENGINEER.

**"H" IS THE HEIGHT OF FENCE. SEE PAY ITEM DESCRIPTION FOR REQ'D HEIGHT FOR PROJECT.

FABRIC	GALV. STEEL OR ALUMINUM COATED STEEL #11 GAGE			ALUMINUM ALLOY OR ALUMINUM COATED STEEL(#11 GAGE)	
FRAME COMPONENTS	GALVANIZED STEEL #11 GAGE			ALUMINUM ALLOY	
SYSTEM	G1	G2	G3	A1	A2
LINE POST	1.90" O.D. STEEL PIPE	1.625" X 1.875" STEEL H	1.625" X 1.875" STEEL R.F.	2.375" O.D. ALUMINUM PIPE	2.00" X 2.50" ALUMINUM PIPE
TERMINAL POST (END, CORNER, BRACES)	2.375" O.D. STEEL PIPE	2.375" O.D. STEEL PIPE	2.375" O.D. STEEL PIPE	2.875" O.D. ALUMINUM PIPE	2.875" O.D. ALUMINUM PIPE
GATE POST UP THRU 6' LEAF	2.875" O.D. STEEL PIPE	2.875" O.D. STEEL PIPE	2.875" O.D. STEEL PIPE	2.875" O.D. ALUMINUM PIPE	2.875" O.D. ALUMINUM PIPE
GATE POST 7' THRU 12' LEAF	4.000" O.D. STEEL PIPE	4.000" O.D. STEEL PIPE	4.000" O.D. STEEL PIPE	4.000" O.D. ALUMINUM PIPE	4.000" O.D. ALUMINUM PIPE
BRACE RAIL	1.660" O.D. STEEL PIPE	1.660" O.D. STEEL PIPE	1.250" X 1.625" STEEL R.F. OR 1.660" O.D. STEEL PIPE	1.660" O.D. ALUMINUM PIPE	1.660" O.D. ALUMINUM PIPE

FOR 4' AND 5' FENCE SYSTEMS

FABRIC	GALV. STEEL OR ALUMINUM COATED STEEL #11 GAGE		
FRAME COMPONENTS	GALVANIZED STEEL		
SYSTEM	G1	G2	G3
LINE POST	2.375" O.D. STEEL PIPE	1.625" X 1.875" STEEL H	1.625" X 1.875" STEEL R.F.
TERMINAL POST (END, CORNER, BRACES)	2.875" O.D. STEEL PIPE	2.875" O.D. STEEL PIPE	2.875" O.D. STEEL PIPE
GATE POST UP THRU 6' LEAF	2.875" O.D. STEEL PIPE	2.875" O.D. STEEL PIPE	2.875" O.D. STEEL PIPE
GATE POST 7' THRU 12' LEAF	4.000" O.D. STEEL PIPE	4.000" O.D. STEEL PIPE	4.000" O.D. STEEL PIPE
BRACE RAIL	1.660" O.D. STEEL PIPE	1.660" O.D. STEEL PIPE	1.250" X 1.625" STEEL R.F. OR 1.660" O.D. STEEL PIPE

FOR 6' FENCE SYSTEMS

ALLOWABLE COMPONENTS FOR FENCE SYSTEMS

STATE OF
NORTH CAROLINA
DEPT. OF TRANSPORTATION
DIVISION OF HIGHWAYS
RALEIGH, N.C.

1-12

ENGLISH STANDARD DRAWING FOR

CHAIN LINK FENCE

4', 5' AND 6' HIGH FENCE

SHEET 3 OF 3
866.01

STATE OF
NORTH CAROLINA
DEPT. OF TRANSPORTATION
DIVISION OF HIGHWAYS
RALEIGH, N.C.

1-12

ENGLISH STANDARD DRAWING FOR

WOVEN WIRE FENCE

WITH WOOD POST

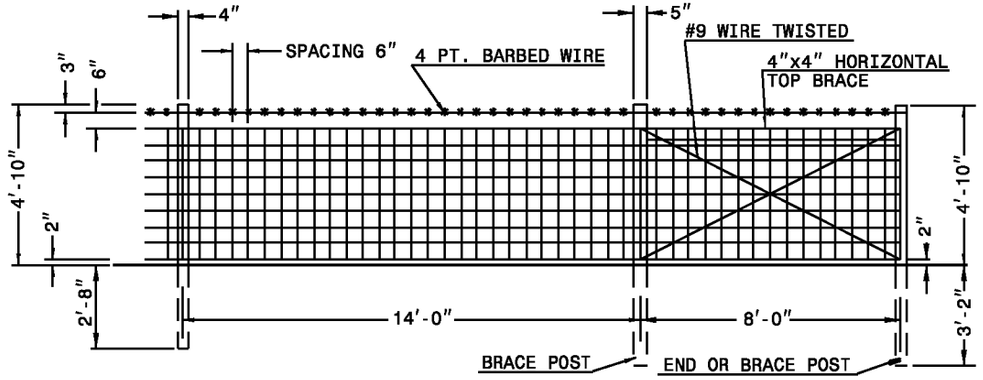

WOVEN WIRE FENCE
END OR GATE LOCATION

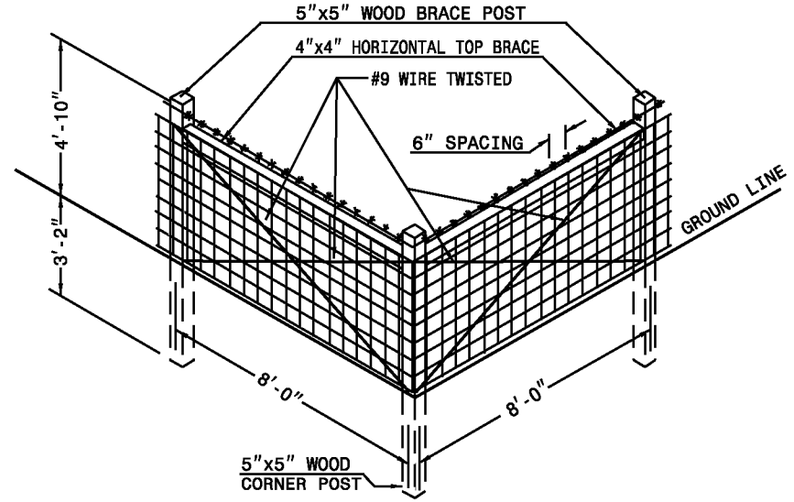

FENCE CORNER
USE WHEN CORNER ANGLE IS 15° OR GREATER

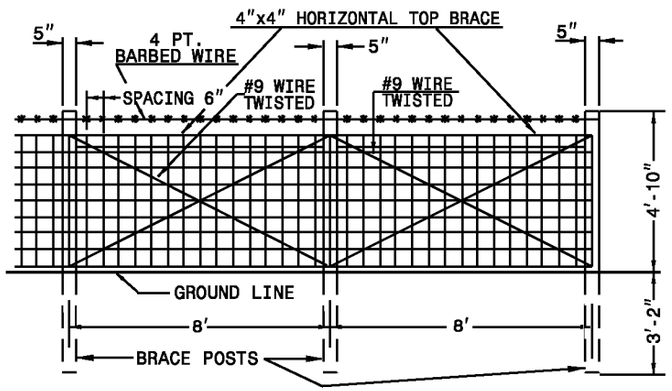

LINE BRACES
(MAXIMUM SPACING 324')

ERECT LINE BRACES BETWEEN END, CORNER OR GATE POSTS AT INTERVALS NOT EXCEEDING 324 FEET.
THIS MAXIMUM INTERVAL MAY BE REDUCED BY THE ENGINEER ON CURVES WHERE THE DEGREE OF CURVATURE IS GREATER THAN 3 DEGREES.
PLACE LINE BRACES AT THE END OF EACH ROLL OR PIECE OF WOVEN WIRE.

PLACE THE BRACE WIRE AROUND THE POST. DRAW WIRE TAUT BY TWISTING BETWEEN EACH POST. THIS APPLIES TO ALL BRACE WIRES. NOTCH POSTS FOR BRACES.
PLACE TWO GALVANIZED 12d OR THREE GALVANIZED 10d ON ALL BRACES AT EACH END.

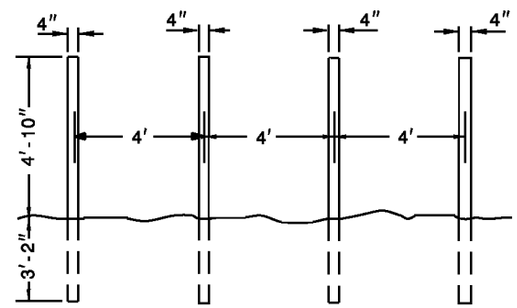

POST FOR BLOCKING DRIVEWAYS
OR OTHER ENTRANCES
INSTALL IN ADDITION TO FENCE WHERE SHOWN IN PLANS OR WHERE DIRECTED BY THE ENGINEER

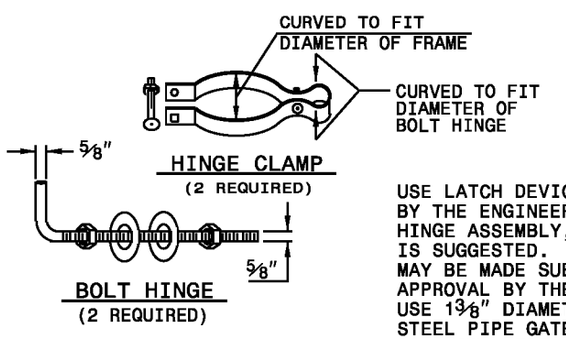

HINGE CLAMP
(2 REQUIRED)

BOLT HINGE
(2 REQUIRED)

USE LATCH DEVICE APPROVED BY THE ENGINEER.
HINGE ASSEMBLY, AS DETAILED, IS SUGGESTED. SUBSTITUTION MAY BE MADE SUBJECT TO APPROVAL BY THE ENGINEER.
USE 1 3/8" DIAMETER GALVANIZED STEEL PIPE GATE FRAME EXCEPT AS SHOWN HERE.

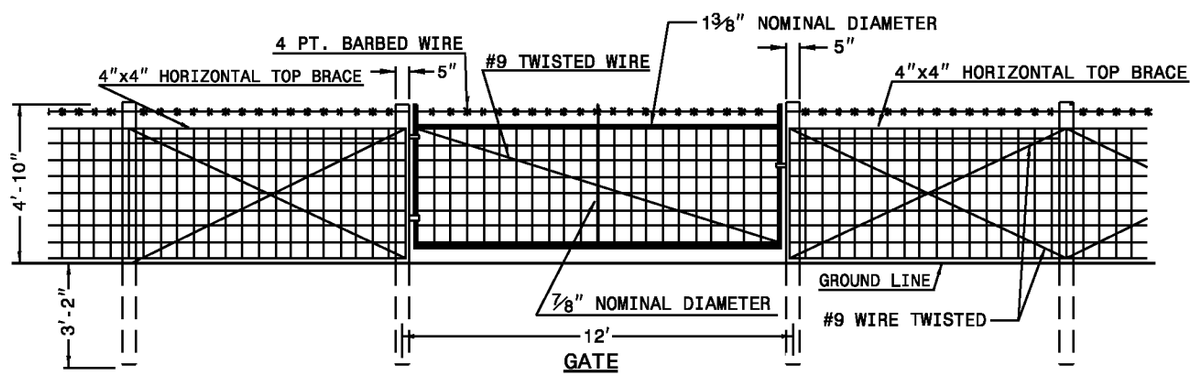

GATE

SHEET 1 OF 3

866.02

STATE OF
NORTH CAROLINA
DEPT. OF TRANSPORTATION
DIVISION OF HIGHWAYS
RALEIGH, N.C.

1-12

ENGLISH STANDARD DRAWING FOR

WOVEN WIRE FENCE

WITH WOOD POST

SHEET 1 OF 3

866.02

STATE OF
NORTH CAROLINA
DEPT. OF TRANSPORTATION
DIVISION OF HIGHWAYS
RALEIGH, N.C.

1-12

ENGLISH STANDARD DRAWING FOR

WOVEN WIRE FENCE

WITH WOOD POST

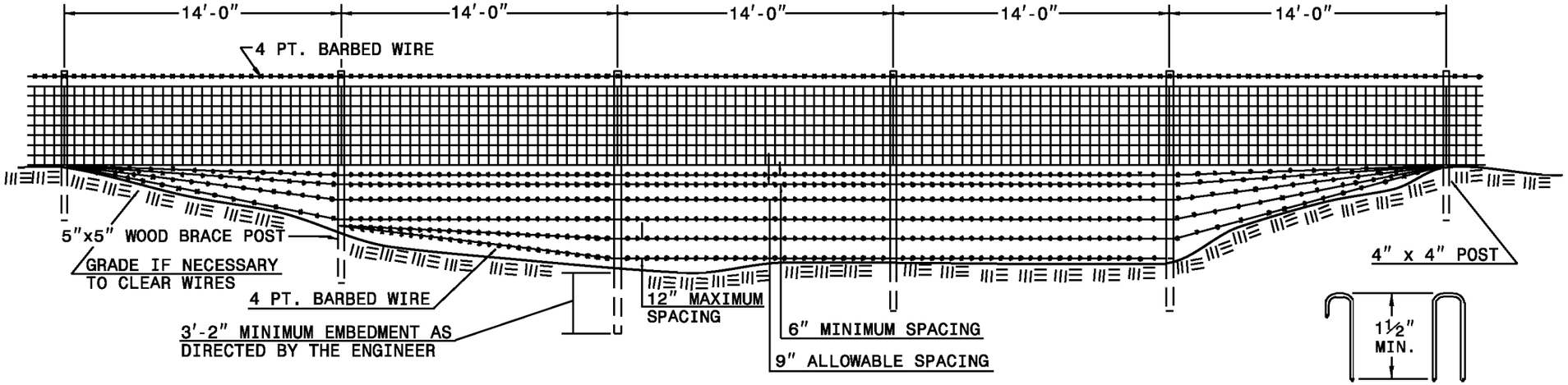

DETAIL OF DITCH CROSSING

ALTERNATE TYPES OF STAPLES

USE ONE #9 STAPLE OR TWO #16 STAPLES
AT EACH POINT OF ATTACHMENT.

WOVEN WIRE FENCE

END OF GATE LOCATION

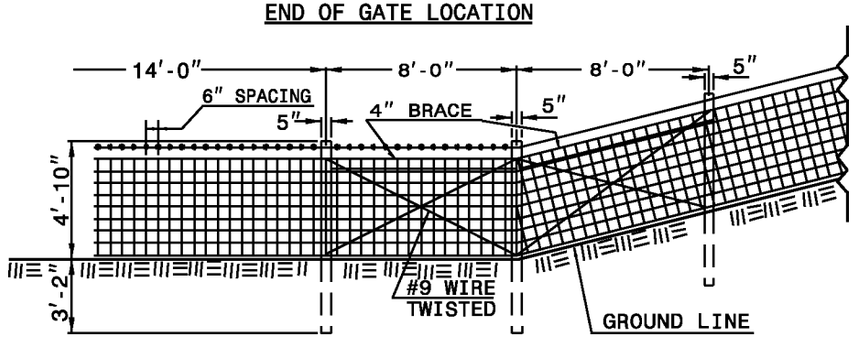

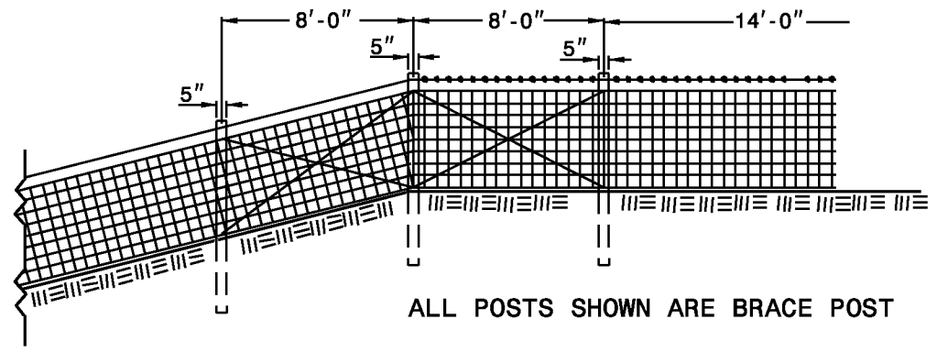

ALL POSTS SHOWN ARE BRACE POST

DETAIL SHOWING METHOD OF
CONSTRUCTING FENCE ON SHARP BREAK IN GRADE

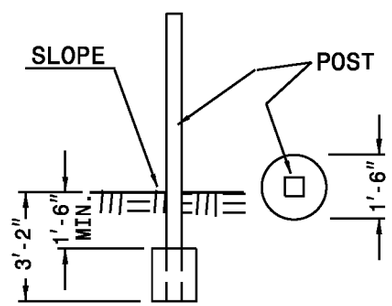

DETAIL OF POST ANCHOR

USE AT GATE POSTS OR WHERE REQUIRED
BY SOIL CONDITIONS. MAY ALSO BE USED IN LIEU
OF SETTING POSTS TO A DEPTH OF 3'-2".

SHEET 2 OF 3

866.02

STATE OF
NORTH CAROLINA
DEPT. OF TRANSPORTATION
DIVISION OF HIGHWAYS
RALEIGH, N.C.

1-12

ENGLISH STANDARD DRAWING FOR

WOVEN WIRE FENCE

WITH WOOD POST

SHEET 2 OF 3

866.02

STATE OF
NORTH CAROLINA
DEPT. OF TRANSPORTATION
DIVISION OF HIGHWAYS
RALEIGH, N.C.

1-12

ENGLISH STANDARD DRAWING FOR
WOVEN WIRE FENCE
WITH WOOD POST

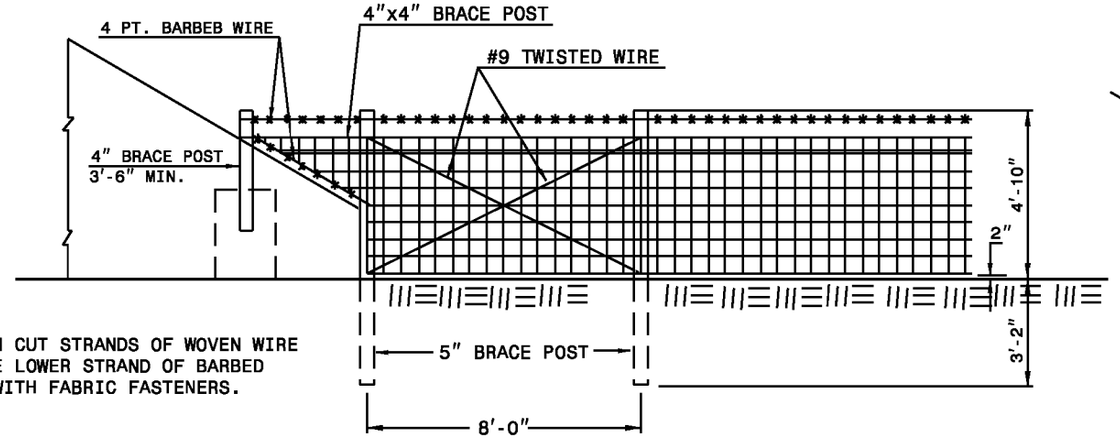

FASTEN CUT STRANDS OF WOVEN WIRE TO THE LOWER STRAND OF BARBED WIRE WITH FABRIC FASTENERS.

ELEVATION

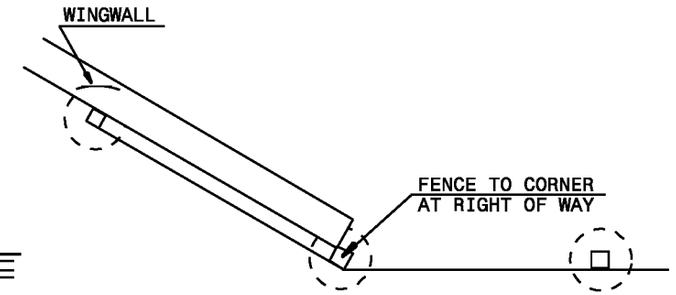

PLAN

METHOD OF TYING FENCE TO HEADWALL

GENERAL NOTES:

ALL POSTS AND BRACES MAY BE EITHER ROUND OR SQUARE AT THE OPTION OF THE CONTRACTOR, PROVIDED THE SAME TYPE IS USED THROUGHOUT THE PROJECT FOR POST AND BRACE.

DIMENSIONS SHOWN ARE THE DIAMETER OF ROUND POSTS OR EDGE DIMENSIONS OF SQUARE POSTS.

INSTALL THE FENCE FACING THE PROPERTY OWNER EXCEPT THAT ON HORIZONTAL CURVES GREATER THAN THREE DEGREES; INSTALL THE FENCE TO PULL AGAINST ALL POSTS.

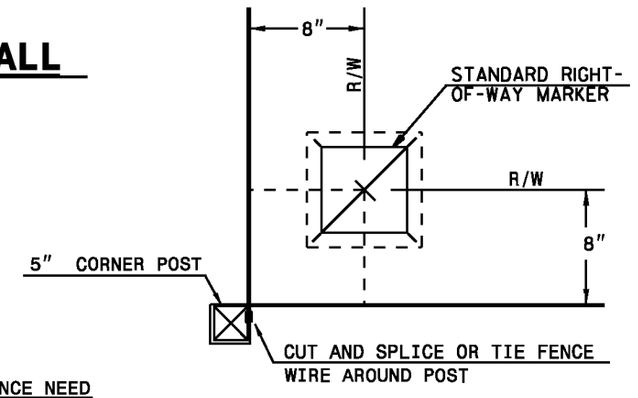

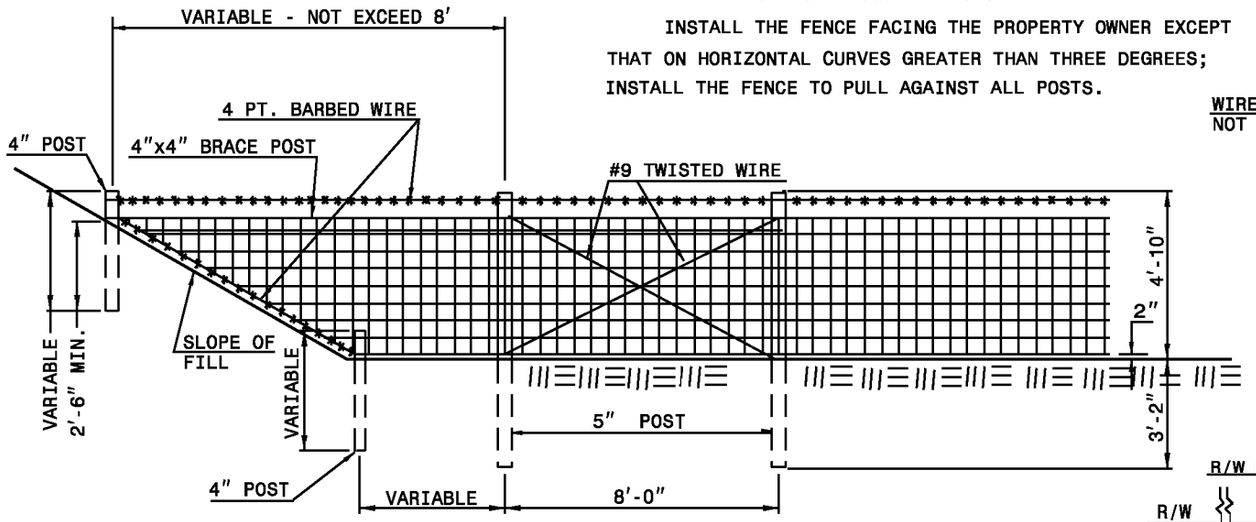

METHOD OF ERECTING FENCE FOR FILL SLOPE

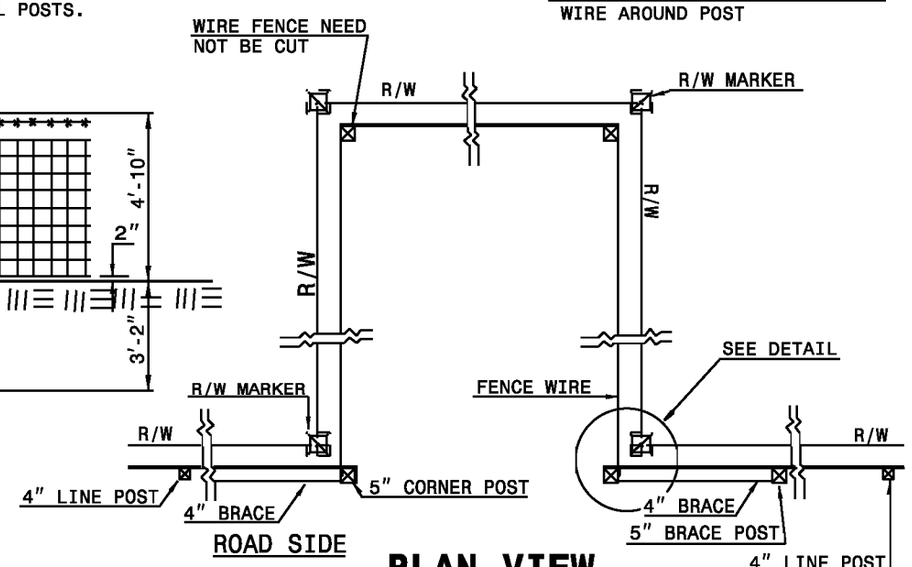

PLAN VIEW

SHEET 3 OF 3
866.02

STATE OF
NORTH CAROLINA
DEPT. OF TRANSPORTATION
DIVISION OF HIGHWAYS
RALEIGH, N.C.

1-12

ENGLISH STANDARD DRAWING FOR
WOVEN WIRE FENCE
WITH WOOD POST

SHEET 3 OF 3
866.02

STATE OF
NORTH CAROLINA
DEPT. OF TRANSPORTATION
DIVISION OF HIGHWAYS
RALEIGH, N.C.

1-12

ENGLISH STANDARD DRAWING FOR

WOVEN WIRE FENCE

WITH STEEL POST

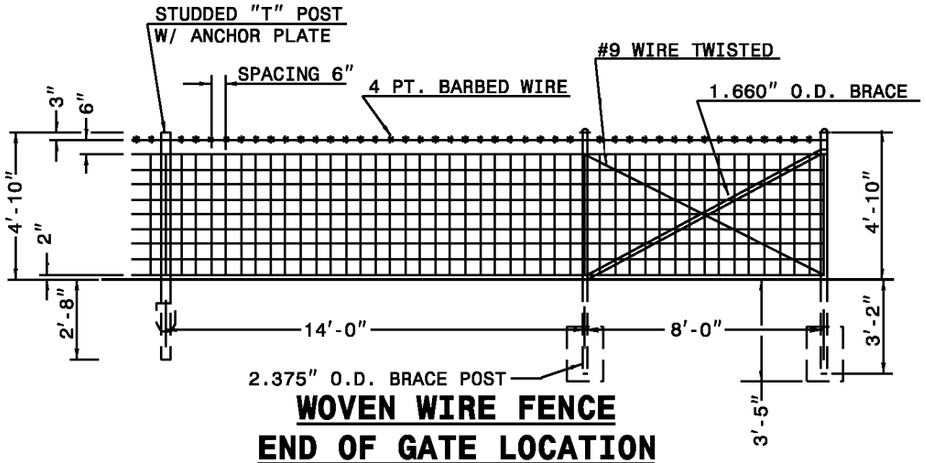

WOVEN WIRE FENCE
END OF GATE LOCATION

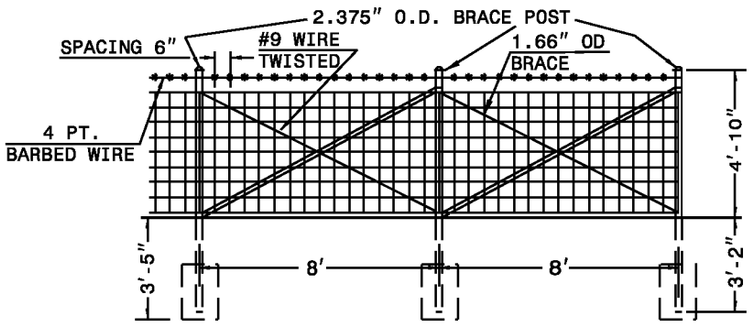

LINE BRACES

PLACE THE BRACE WIRE AROUND THE POST. DRAW THE WIRE TAUT BY TWISTING BETWEEN EACH POST. THIS APPLIES TO ALL BRACE WIRES.

ERECT LINE BRACES BETWEEN END, CORNER OR GATE POSTS AT INTERVALS NOT EXCEEDING 324 FEET.

THIS MAXIMUM INTERVAL MAY BE REDUCED BY THE ENGINEER ON CURVES WHERE THE DEGREE OF CURVATURE IS GREATER THAN 3 DEGREES. PLACE LINE BRACES AT THE END OF EACH ROLL OR PIECE OF WOVEN WIRE.

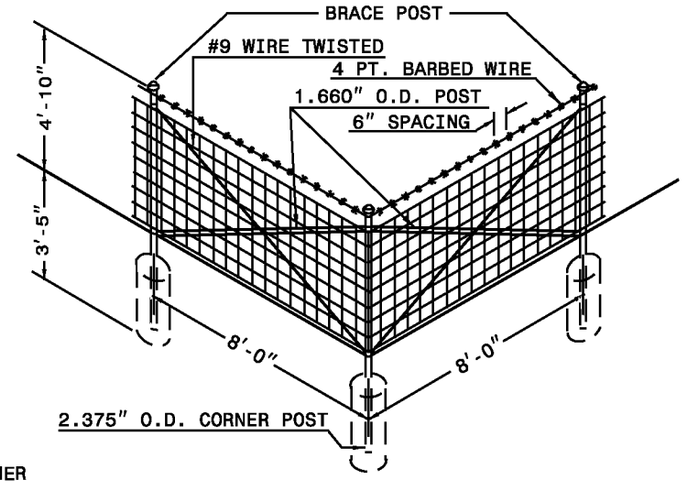

FENCE CORNER

USE WHEN CORNER ANGLE IS 15° OR GREATER

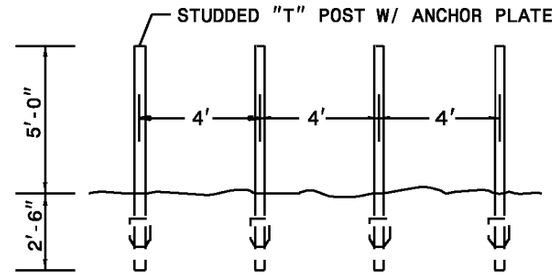

POST FOR BLOCKING
DRIVEWAYS AND OTHER ENTRANCES

INSTALL IN ADDITION TO FENCE WHERE SHOWN IN PLANS OR WHERE DIRECTED BY THE ENGINEER

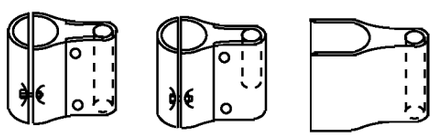

TOP HINGE BOTTOM HINGE LATCH FORK

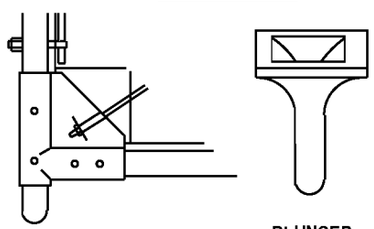

BOTTOM GATE CORNER AND HINGE ATTACHMENT

PLUNGER BAR CATCH

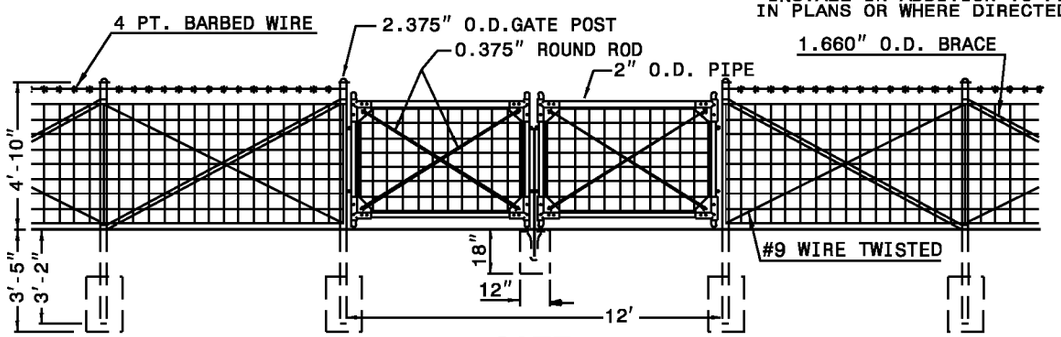

GATE

USE LATCH DEVICE APPROVED BY THE ENGINEER. HINGE ASSEMBLY, AS DETAILED, IS SUGGESTED. SUBSTITUTION MAY BE MADE SUBJECT TO THE APPROVAL OF THE ENGINEER.

SHEET 1 OF 3

866.03

STATE OF
NORTH CAROLINA
DEPT. OF TRANSPORTATION
DIVISION OF HIGHWAYS
RALEIGH, N.C.

1-12

ENGLISH STANDARD DRAWING FOR

WOVEN WIRE FENCE

WITH STEEL POST

SHEET 1 OF 3

866.03

STATE OF
NORTH CAROLINA
DEPT. OF TRANSPORTATION
DIVISION OF HIGHWAYS
RALEIGH, N.C.

1-12

ENGLISH STANDARD DRAWING FOR

WOVEN WIRE FENCE

WITH STEEL POST

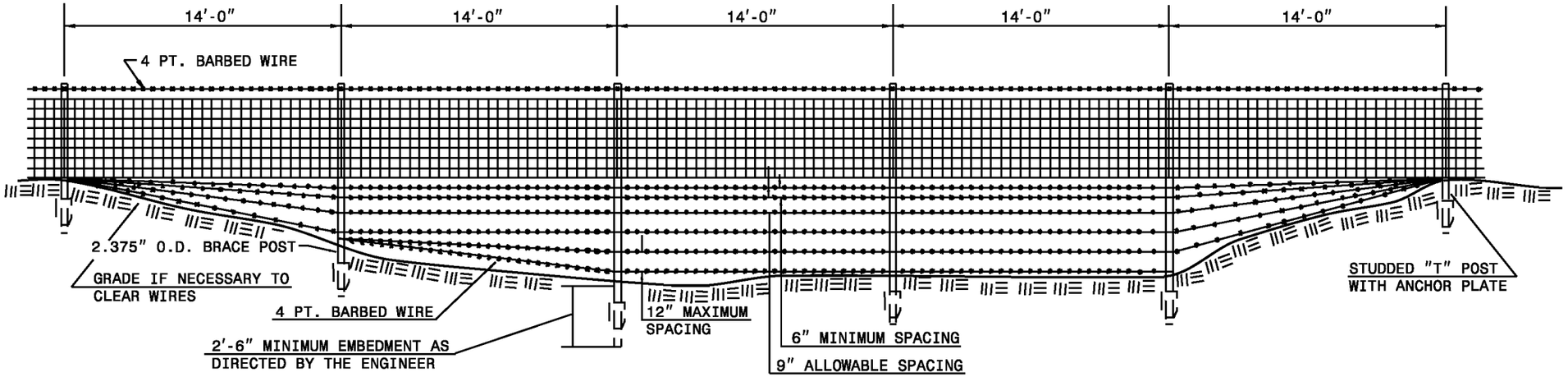

DETAIL OF DITCH CROSSING

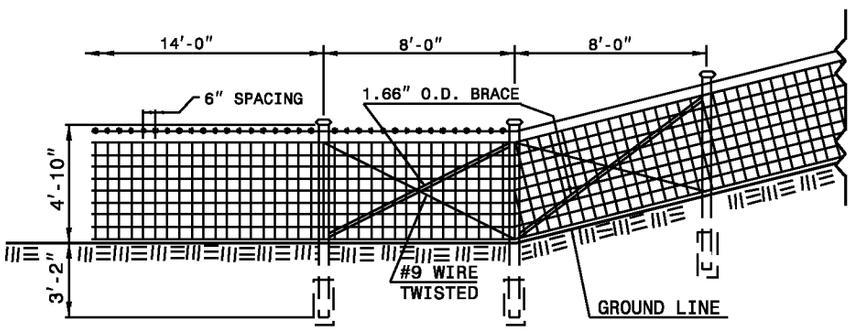

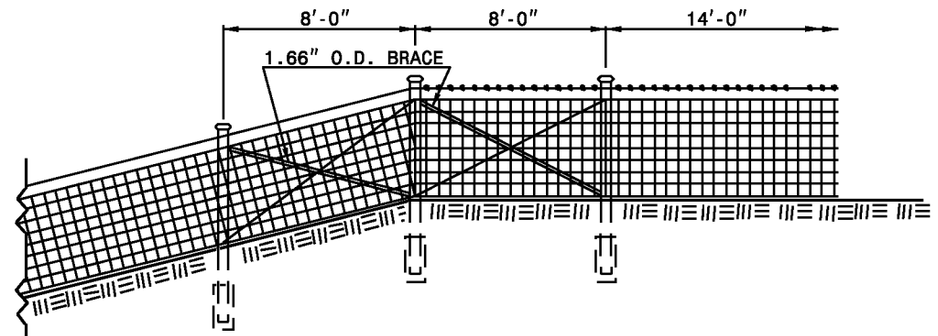

DETAIL SHOWING METHOD OF CONSTRUCTING FENCE ON SHARP BREAK IN GRADE

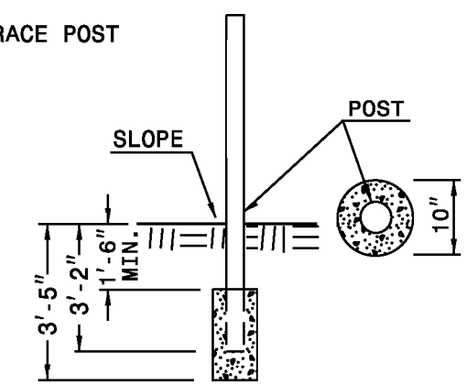

DETAIL OF POST ANCHOR

USE CONCRETE FOOTING ON ALL CORNER, END, GATE AND BRACE POSTS.

SHEET 2 OF 3

866.03

STATE OF
NORTH CAROLINA
DEPT. OF TRANSPORTATION
DIVISION OF HIGHWAYS
RALEIGH, N.C.

1-12

ENGLISH STANDARD DRAWING FOR

WOVEN WIRE FENCE

WITH STEEL POST

SHEET 2 OF 3

866.03

STATE OF
NORTH CAROLINA
DEPT. OF TRANSPORTATION
DIVISION OF HIGHWAYS
RALEIGH, N.C.

1-12

ENGLISH STANDARD DRAWING FOR
WOVEN WIRE FENCE
WITH STEEL POST

GENERAL NOTES:

ISNTALL THE FENCE FACING THE PROPERTY OWNER EXCEPT ON HORIZONTAL CURVES GREATER THAN THREE DEGREES, INSTALL THE FENCE TO PULL AGAINST ALL POSTS.

IN LIEU OF 2.375" O.D. TUBULAR POSTS 2½" x 2½" x¼" ANGLE SECTIONS MAY BE USED.

IN LIEU OF 1.660" O.D. TUBULAR BRACES 2" x 2" x¼" ANGLE SECTIONS MAY BE USED.

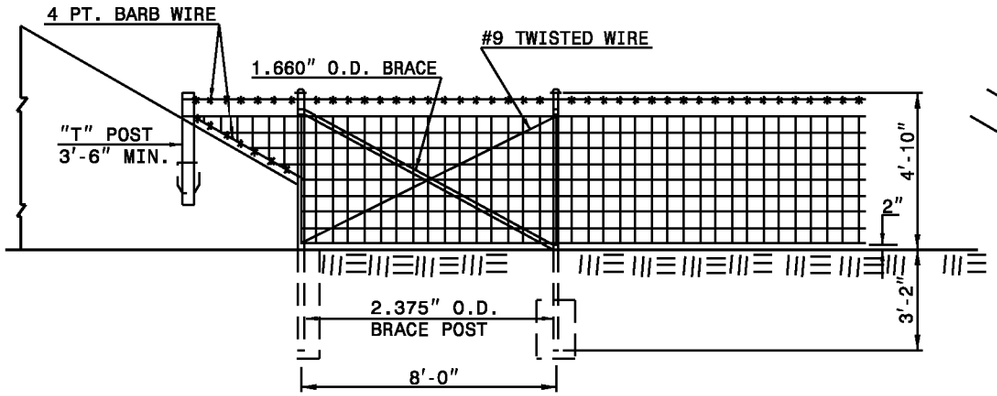

ELEVATION

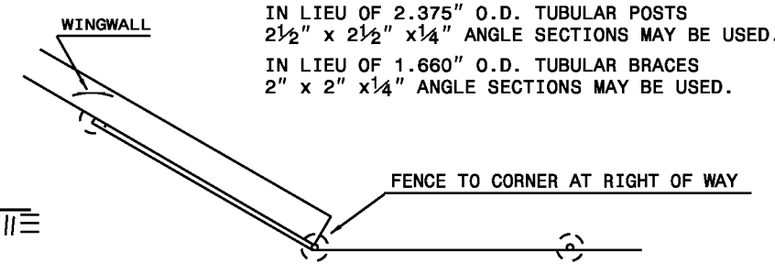

PLAN

METHOD OF TIEING FENCE TO HEADWALL

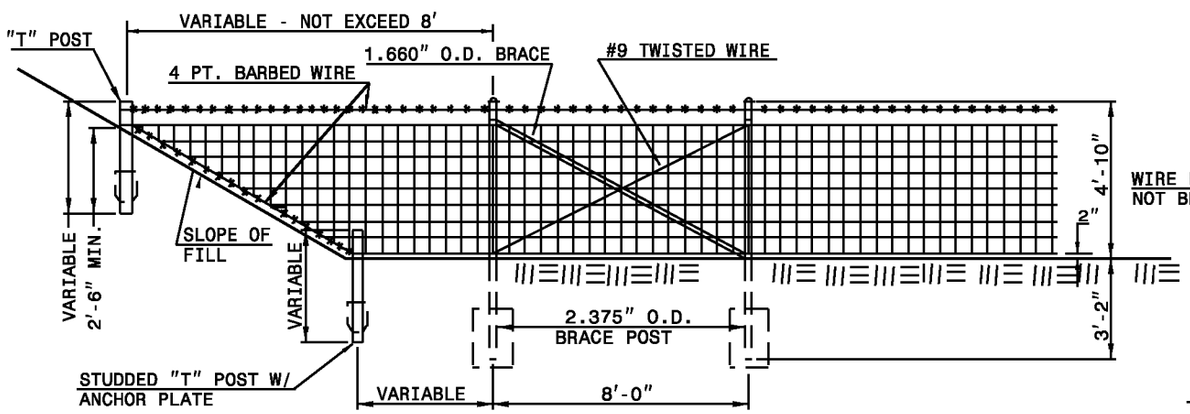

MEHTOD OF ERECTING FENCE FOR FILL SLOPE

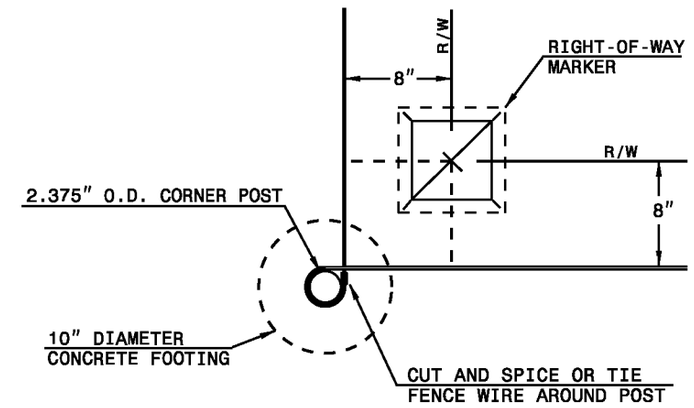

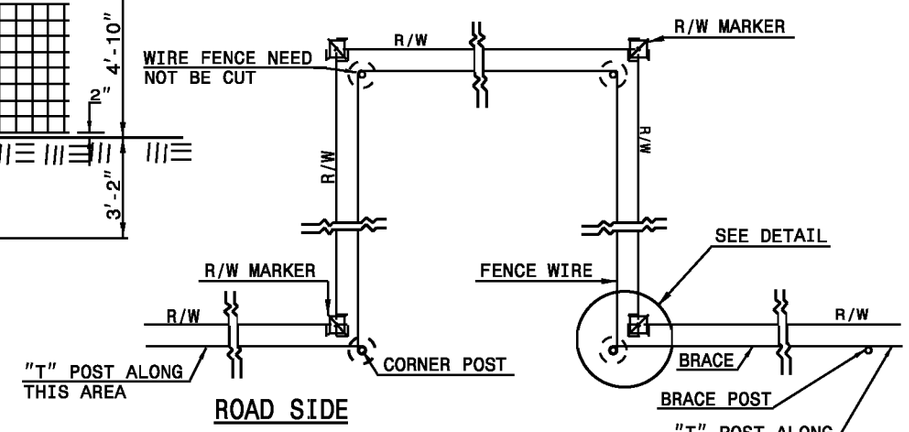

ROAD SIDE

PLAN VIEW

STATE OF
NORTH CAROLINA
DEPT. OF TRANSPORTATION
DIVISION OF HIGHWAYS
RALEIGH, N.C.

1-12

ENGLISH STANDARD DRAWING FOR
WOVEN WIRE FENCE
WITH STEEL POST

SHEET 3 OF 3
866.03

SHEET 3 OF 3
866.03

STATE OF
NORTH CAROLINA
DEPT. OF TRANSPORTATION
DIVISION OF HIGHWAYS
RALEIGH, N.C.

1-12

ENGLISH STANDARD DRAWING FOR

BARBED WIRE FENCE

WITH WOOD POSTS

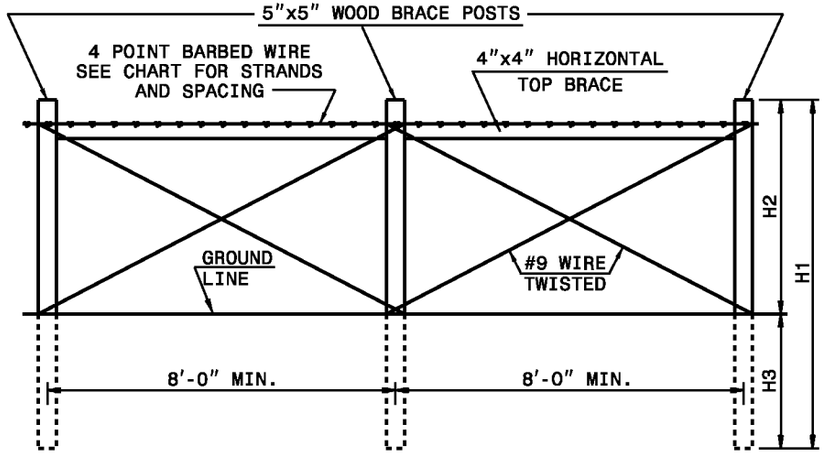

LINE BRACES

(MAXIMUM SPACING 330')

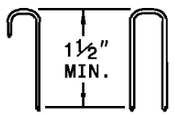

ALTERNATE TYPES OF STAPLES

USE ONE #9 STAPLE OR TWO #16 STAPLES
AT EACH POINT OF ATTACHMENT.

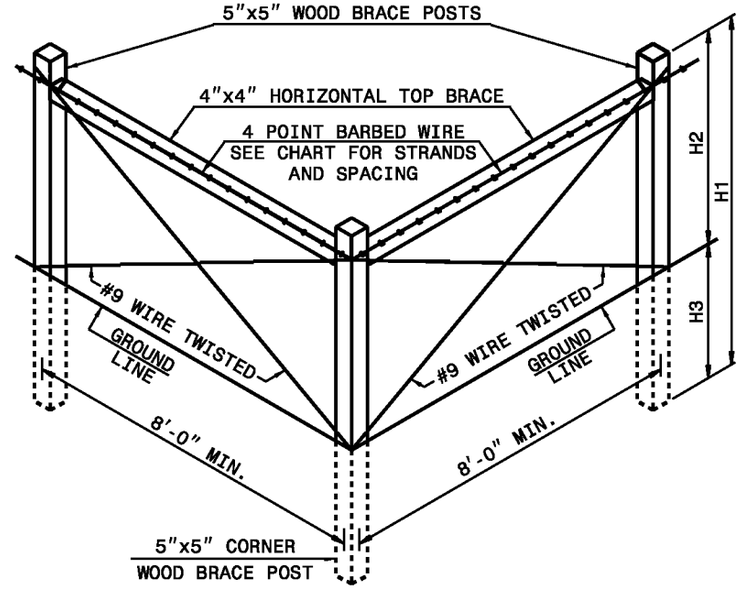

CORNER BRACE

USE WHEN CORNER ANGLE IS 15° OR GREATER

BARBED WIRE FENCE CHART

NUMBER OF BARBED WIRE STRANDS			2	3	4	5	6	7
STRAND SPACING		A	8"	4"	3"	3"	3"	3"
		B	12"	12"	15"	12"	10"	8"
		C	21"	13"	11"	8"	6"	8"
BRACE POSTS	LENGTH	H1	6'-0"	6'-0"	8'-0"	8'-0"	8'-0"	8'-0"
	EXPOSED	H2	3'-5"	3'-5"	4'-11"	4'-11"	4'-11"	4'-11"
	EMBEDMENT	H3	2'-7"	2'-7"	3'-1"	3'-1"	3'-1"	3'-1"
LINE POSTS	LENGTH	H4	6'-0"	6'-0"	7'-6"	7'-6"	7'-6"	7'-6"
	EXPOSED	H5	3'-5"	3'-5"	4'-11"	4'-11"	4'-11"	4'-11"
	EMBEDMENT	H6	2'-7"	2'-7"	2'-7"	2'-7"	2'-7"	2'-7"
HORIZONTAL BRACE		---	8'-0"	8'-0"	8'-0"	8'-0"	8'-0"	8'-0"

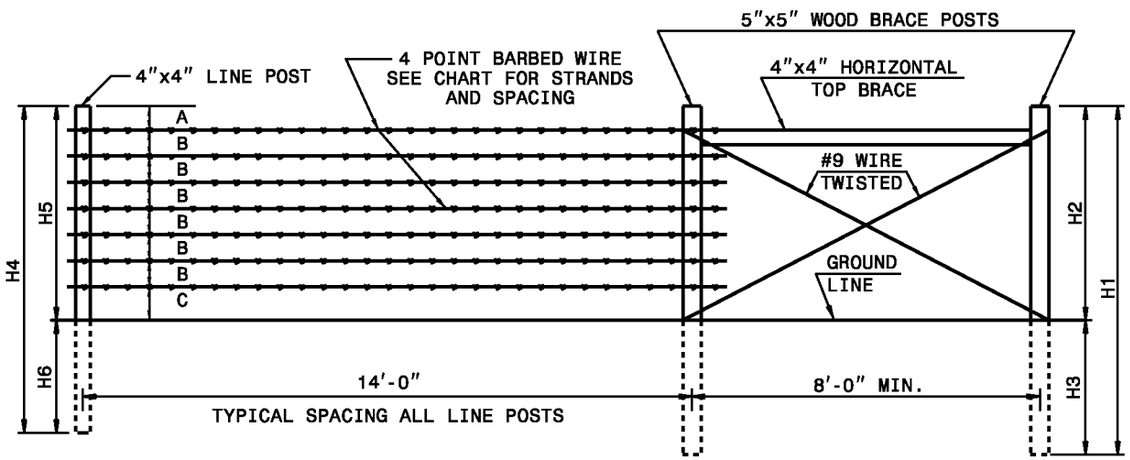

END OR GATE BRACES

SHEET 1 OF 2

866.04

STATE OF
NORTH CAROLINA
DEPT. OF TRANSPORTATION
DIVISION OF HIGHWAYS
RALEIGH, N.C.

1-12

ENGLISH STANDARD DRAWING FOR

BARBED WIRE FENCE

WITH WOOD POSTS

SHEET 1 OF 2

866.04

STATE OF
NORTH CAROLINA
DEPT. OF TRANSPORTATION
DIVISION OF HIGHWAYS
RALEIGH, N.C.

1-12

ENGLISH STANDARD DRAWING FOR

BARBED WIRE FENCE

WITH WOOD POSTS

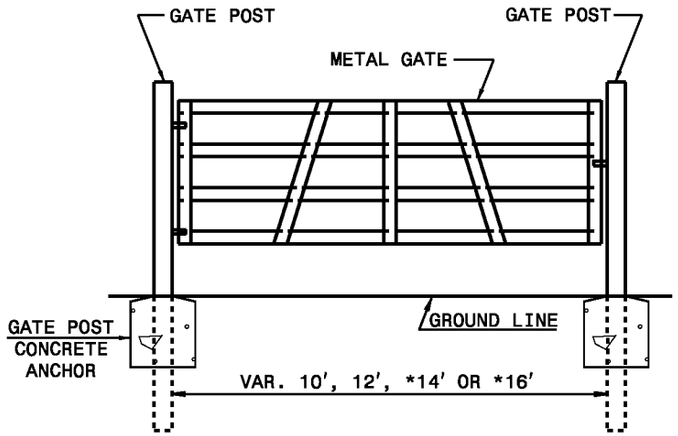

ALTERNATE CATTLE GATE

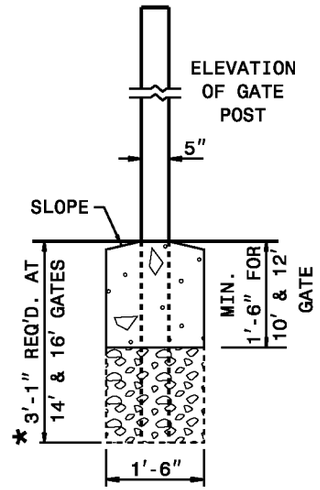

DETAIL OF GATE POST ANCHOR

USE CLASS "B" CONCRETE AT GATE POSTS OR WHERE REQUIRED BY SOIL CONDITIONS. CONCRETE MAY ALSO BE USED IN LIEU OF SETTING POSTS TO THEIR MAXIMUM DEPTH.

GENERAL NOTES:

ALL POSTS AND BRACES MAY BE EITHER ROUND OR SQUARE AT THE OPTION OF THE CONTRACTOR, PROVIDED THE SAME TYPE IS USED THROUGHOUT THE PROJECT.
DIMENSIONS SHOWN ARE THE DIAMETER OF ROUND OR EDGE DIMENSIONS OF SQUARE POSTS AND BRACES.

ERECT LINE BRACES BETWEEN END, CORNER OR GATE POSTS. PLACE LINE BRACES AT INTERVALS NOT EXCEEDING 330' AND AT THE END OF THE BARBED WIRE ROLL.

THE 330' INTERVAL MAY BE REDUCED BY THE ENGINEER ON CURVES WHERE THE DEGREE OF CURVATURE IS GREATER THAN 3 DEGREES.

NOTCH BRACE POSTS 1" MINIMUM FOR HORIZONTAL BRACES. PLACE TWO GALVANIZED 12d OR THREE GALVANIZED 10d NAILS AT EACH END OF ALL BRACES.

PLACE THE BRACE WIRE AROUND THE POST. DRAW ALL BRACE WIRE TAUT BY TWISTING BETWEEN EACH POST.

INSTALL THE FENCE FACING THE PROPERTY OWNER EXCEPT THAT ON HORIZONTAL CURVES GREATER THAN THREE DEGREES (3°) INSTALL THE FENCE TO PULL AGAINST ALL POSTS. SEE STD. 866.02 FOR FENCING AT DITCH CROSSINGS, BREAKS IN GRADES AND R/W BREAKS.

USE LATCH DEVICE APPROVED BY THE ENGINEER. HINGE ASSEMBLY AS SHOWN IS SUGGESTED. SUBSTITUTION MAY BE SUBJECT TO APPROVAL BY THE ENGINEER. USE 1⅜" DIAMETER GALVANIZED STEEL PIPE FOR GATE FRAME EXCEPT AS SHOWN HERE.

ANY COMBINATION OF GATE AND FENCE TYPE MEETING THE APPROVAL OF THE ENGINEER IS ACCEPTABLE AND IS NOT LIMITED TO THE EXAMPLES SHOWN HEREON.

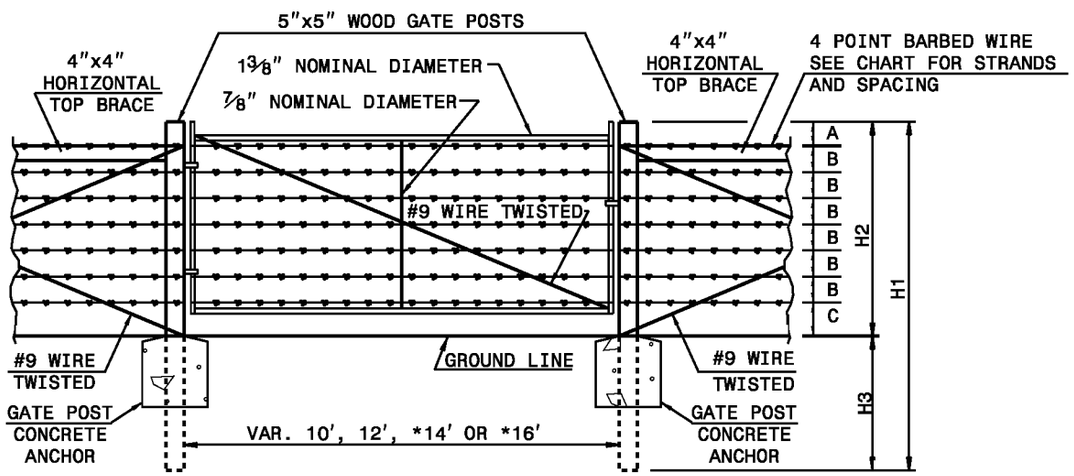

GATE

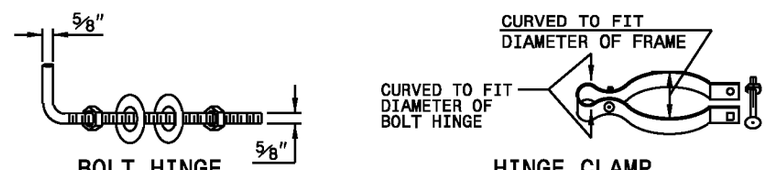

BOLT HINGE
(2 REQUIRED)

HINGE CLAMP
(2 REQUIRED)

HINGE ASSEMBLY

SHEET 2 OF 2

866.04

STATE OF
NORTH CAROLINA
DEPT. OF TRANSPORTATION
DIVISION OF HIGHWAYS
RALEIGH, N.C.

1-12

ENGLISH STANDARD DRAWING FOR

BARBED WIRE FENCE

WITH WOOD POSTS

SHEET 2 OF 2

866.04

STATE OF
NORTH CAROLINA
DEPT. OF TRANSPORTATION
DIVISION OF HIGHWAYS
RALEIGH, N.C.

1-12

ENGLISH STANDARD DRAWING FOR

GLARE SCREEN

CHAIN LINK FABRIC/GUARDRAIL MOUNTED

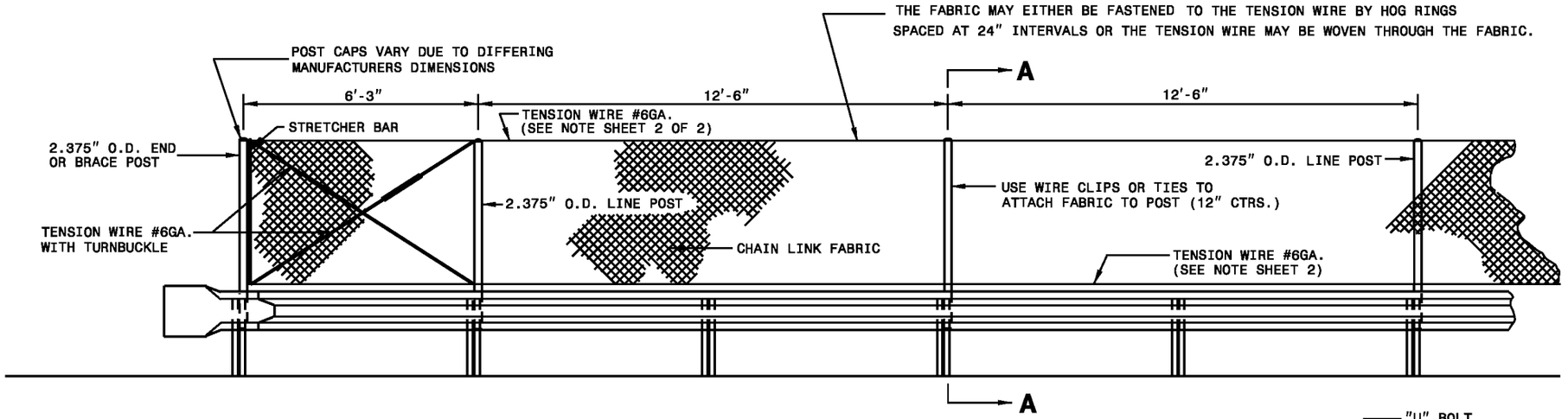

ELEVATION

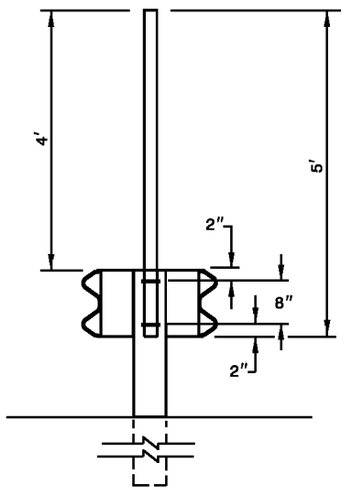

SECTION A-A

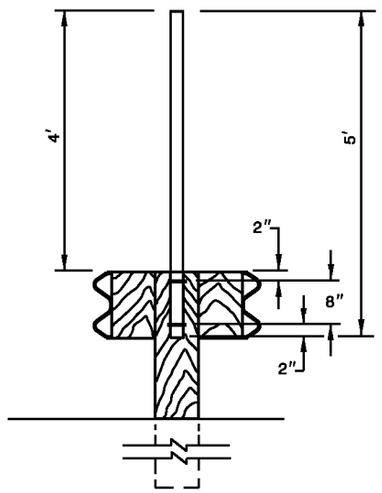

ALTERNATE SECTION A-A

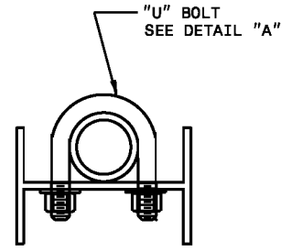

POST MOUNTING TO STEEL GUARDRAIL W6 POST

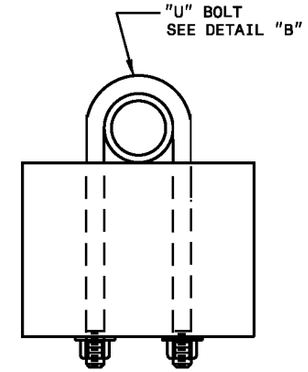

POST MOUNTING TO WOOD GUARDRAIL 6" X 8" POST

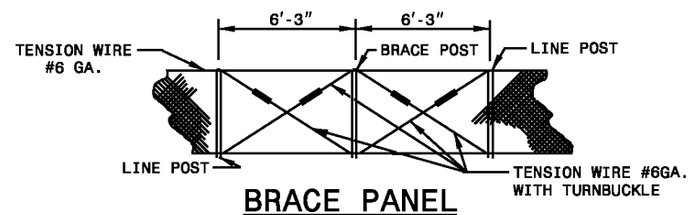

BRACE PANEL ELEVATION

NOTE:
ERECT BRACE PANEL BETWEEN ENDS AT INTERVALS NOT EXCEEDING 350 FT. ERECT ADDITIONAL BRACE POSTS IF SO DIRECTED BY THE ENGINEER. BRACE THE POSTS FROM BOTH SIDES OF POSTS.

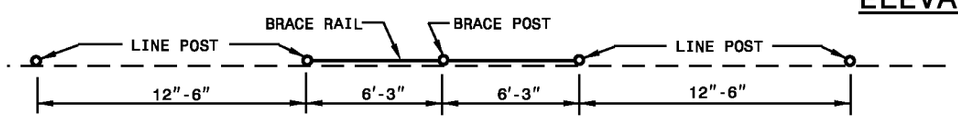

PLAN OF BRACE PANEL

SHEET 1 OF 2

866.05

STATE OF
NORTH CAROLINA
DEPT. OF TRANSPORTATION
DIVISION OF HIGHWAYS
RALEIGH, N.C.

1-12

ENGLISH STANDARD DRAWING FOR

GLARE SCREEN

CHAIN LINK FABRIC/GUARDRAIL MOUNTED

SHEET 1 OF 2

866.05

STATE OF
NORTH CAROLINA
DEPT. OF TRANSPORTATION
DIVISION OF HIGHWAYS
RALEIGH, N.C.

1-12

ENGLISH STANDARD DRAWING FOR

GLARE SCREEN

CHAIN LINK FABRIC-GUARDRAIL MOUNTED

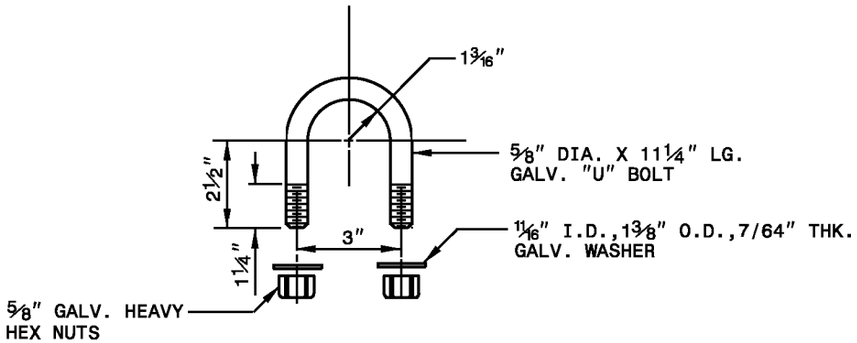

DETAIL-A

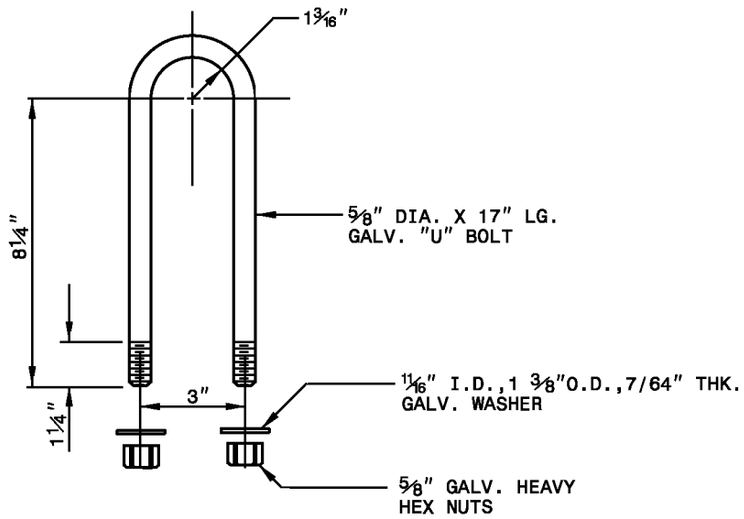

DETAIL-B

NOTES: VINYL COATED GLARE SCREEN

1. USE CHAIN LINK FABRIC 48" WIDE, 1/2" MESH, 11 1/2 GA. HOT DIPPED GALVANIZED STEEL WIRE VINYL COATED SHERWOOD GREEN.
2. USE END (BRACE) POST, LINE POST AND BRACE RAIL GALVANIZED STEEL PIPE VINYL COATED SHERWOOD GREEN.
3. USE FITTINGS AND OTHER APPURTENANCES ALUMINUM ALLOY, GALVANIZED PRESSED STEEL, MALLEABLE OR CAST STEEL VINYL COATED SHERWOOD GREEN. PAINTED FITTINGS ARE NOT ACCEPTABLE.
4. USE TENSION WIRE GALVANIZED STEEL ASTM A752 GRADE 1335 OR 5140 VINYL COATED SHERWOOD GREEN.
5. USE HOG RINGS 9 GA. AND VINYL COATED SHERWOOD GREEN.
6. USE TIRE WIRE 9 GA. GALVANIZED STEEL WIRE VINYL COATED SHERWOOD GREEN.

NOTES: GALVANIZED GLARE SCREEN

1. USE CHAIN LINK FABRIC 48" WIDE, 1/2" MESH, 11 1/2 GA. HOT DIPPED GALVANIZED STEEL WIRE.
2. USE END (BRACE) POST, LINE POST AND BRACE RAIL GALVANIZED STEEL PIPE.
3. USE FITTINGS AND OTHER APPURTENANCES GALVANIZED PRESSED STEEL, MALLEABLE OR CAST STEEL.
4. USE TENSION WIRE GALVANIZED STEEL ASTM A752 GRADE 1335 OR 5140.
5. USE HOG RINGS 9 GA.
6. USE TIRE WIRE 9 GA. GALVANIZED STEEL WIRE.

STATE OF
NORTH CAROLINA
DEPT. OF TRANSPORTATION
DIVISION OF HIGHWAYS
RALEIGH, N.C.

1-12

ENGLISH STANDARD DRAWING FOR

GLARE SCREEN

CHAIN LINK FABRIC-GUARDRAIL MOUNTED

SHEET 2 OF 2
866.05

STATE OF
NORTH CAROLINA
DEPT. OF TRANSPORTATION
DIVISION OF HIGHWAYS
RALEIGH, N.C.

1-12

ENGLISH STANDARD DRAWING FOR

RIP RAP IN CHANNELS

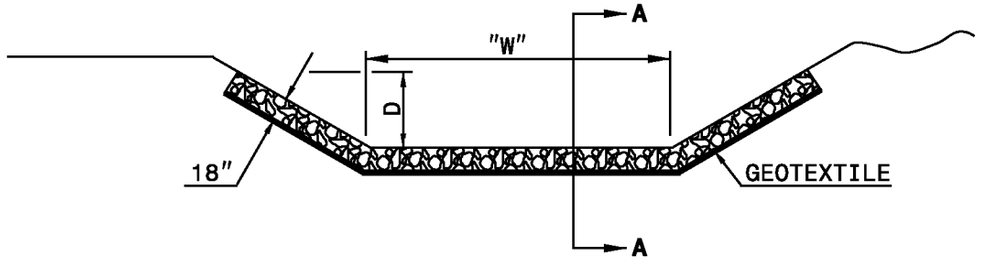

CHANNEL WITH CLASS I RIP RAP*

GENERAL NOTES:

1. USE RIP-RAP IN CHANNEL BED WHERE SHOWN ON PLANS.
2. IF BEDROCK IS ENCOUNTERED WITHIN THE LIMITS OF THE TOEWALL, BEGIN TOEWALL ON THE BEDROCK OR AS DIRECTED BY THE ENGINEER.
3. WHERE ONLY ONE SIDE REQUIRES RIP-RAP I OR 'II' LIST STATION AND SIDE OF SAME.

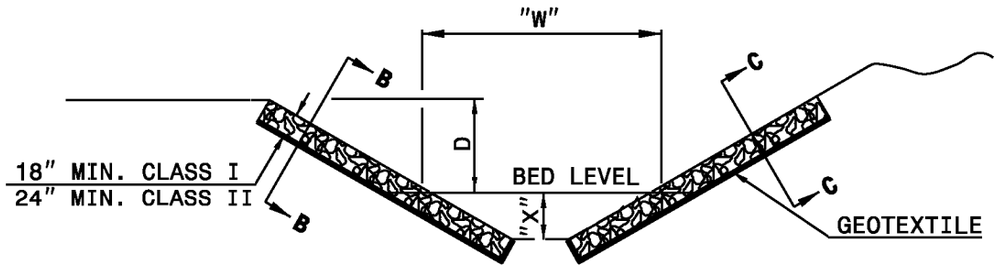

CHANNEL WITH CLASS I OR CLASS II RIP RAP

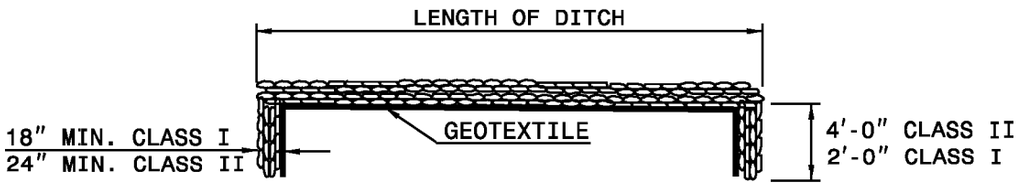

LONGITUDINAL SECTION A-A, B-B OR C-C

CLASS I	
*"W"	"X"
0'-5'	BED LEVEL
6'-10'	12"
11'-20'	18"

*FOR "V" DITCH "W" IS 0'

CLASS II	
"W"	"X"
ALL	36"

SHEET 1 OF 1

876.01

STATE OF
NORTH CAROLINA
DEPT. OF TRANSPORTATION
DIVISION OF HIGHWAYS
RALEIGH, N.C.

1-12

ENGLISH STANDARD DRAWING FOR

RIP RAP IN CHANNELS

SHEET 1 OF 1

876.01

STATE OF
NORTH CAROLINA
DEPT. OF TRANSPORTATION
DIVISION OF HIGHWAYS
RALEIGH, N.C.

1-12

ENGLISH STANDARD DRAWING FOR

GUIDE FOR RIP RAP AT PIPE OUTLETS

SHEET 1 OF 1

876.02

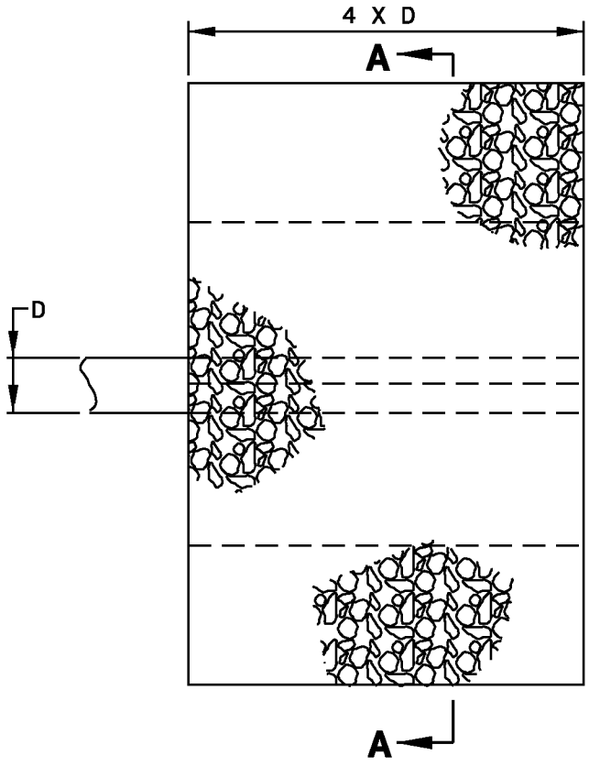

PLAN

D	OUTLET W/DITCH					OUTLET W/O DITCH				
	CLASS 'B' RIP RAP		CLASS I RIP RAP			CLASS 'B' RIP RAP		CLASS I RIP RAP		
	TONS	GEO-TEXTILE (S.Y.)	S.Y.	TONS	GEO-TEXTILE (S.Y.)	TONS	GEO-TEXTILE (S.Y.)	S.Y.	TONS	GEO-TEXTILE (S.Y.)
12"	2	5	5	2	5	1	4	2	1	4
15"	2	7	7	3	7	1	5	3	2	6
18"	3	10	9	4	10	2	7	4	2	8
24"	5	14	15	7	15	3	11	7	4	12
30"	8	21	21	11	22	5	16	11	7	17
36"	11	28	29	15	30	7	22	16	10	23
42"	15	37	39	20	39	10	28	22	13	30
48"	-	-	49	26	50	-	-	28	17	38
54"	-	-	60	33	62	-	-	36	21	47
60"	-	-	73	40	75	-	-	44	26	56
66"	-	-	87	48	89	-	-	54	32	67
72"	-	-	102	57	104	-	-	64	38	78

NOTE:
FOR CALCULATION PURPOSES
CLASS 'B' RIP RAP = 100 LBS./FT^3
CLASS I RIP RAP = 105 LBS./FT^3

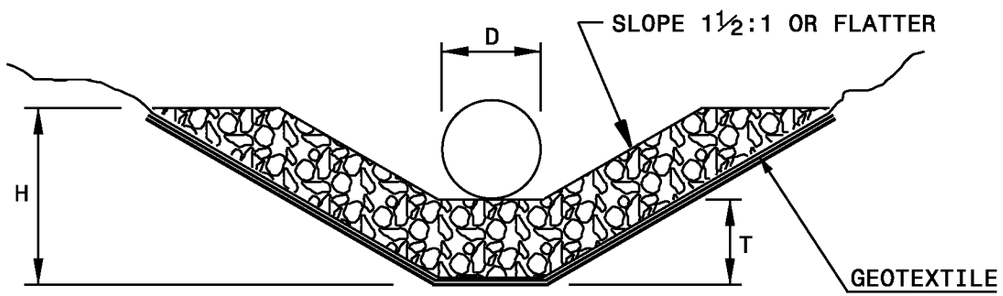

SECTION A-A

PIPE OUTLET WITH DITCH

H= RIP RAP TO TOP OF PIPE (MAX. H = D + T)
T= 15" CLASS I RIP RAP, UNLESS OTHERWISE SHOWN ON PLANS
T= 12" CLASS 'B' RIP RAP, UNLESS OTHERWISE SHOWN ON PLANS

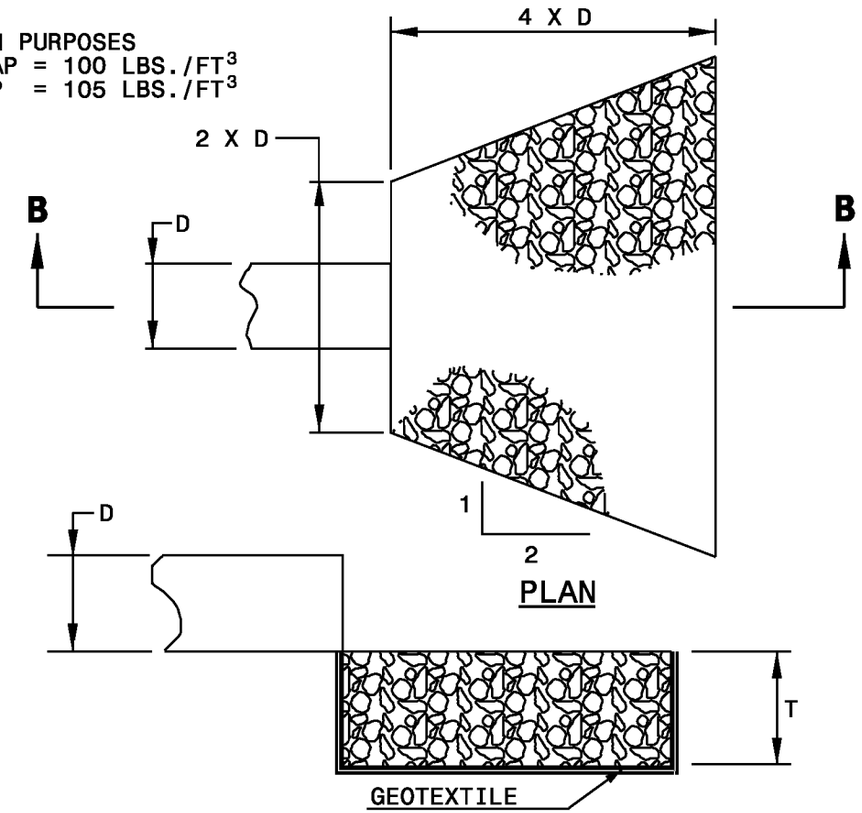

PLAN

SECTION B-B

PIPE OUTLET WITHOUT DITCH

STATE OF
NORTH CAROLINA
DEPT. OF TRANSPORTATION
DIVISION OF HIGHWAYS
RALEIGH, N.C.

1-12

ENGLISH STANDARD DRAWING FOR

GUIDE FOR RIP RAP AT PIPE OUTLETS

SHEET 1 OF 1

876.02

STATE OF
NORTH CAROLINA
DEPT. OF TRANSPORTATION
DIVISION OF HIGHWAYS
RALEIGH, N.C.

1-12

ENGLISH STANDARD DRAWING FOR

DRAINAGE DITCHES WITH CLASS 'A' RIP RAP

SHEET 1 OF 1

876.03

GENERAL NOTES:

-USE CLASS 'A' RIP RAP.

-CONSTRUCT WIDTH AND SHAPE OF THE DITCHES AS SHOWN OR DIRECTED BY THE ENGINEER.

-USE GEOTEXTILE UNDER CLASS 'A' RIP RAP IF SPECIFIED ON PLANS.

*AS SPECIFIED ON PLANS.

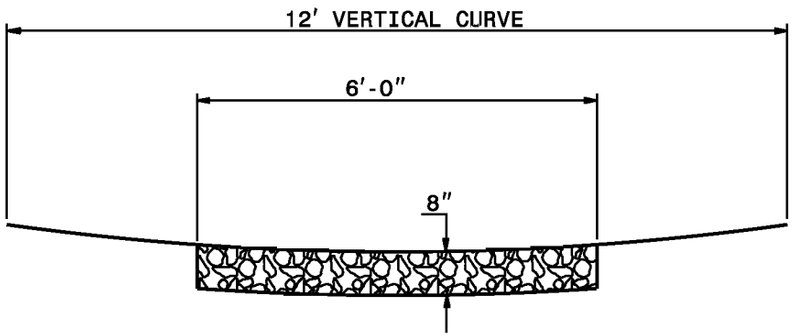

12' V.C. ROADWAY DITCH

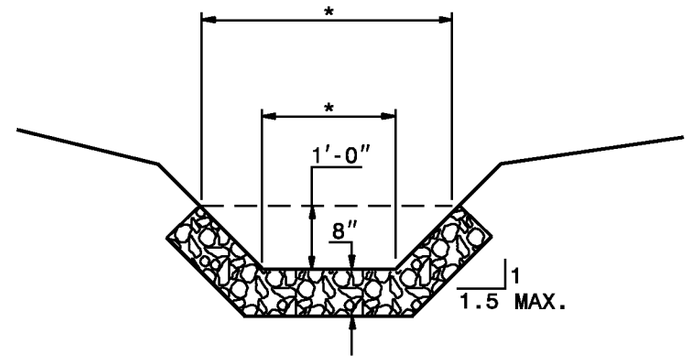

SLOPE DRAIN, BASE DITCH OR BERM DRAINAGE OUTLET DITCH

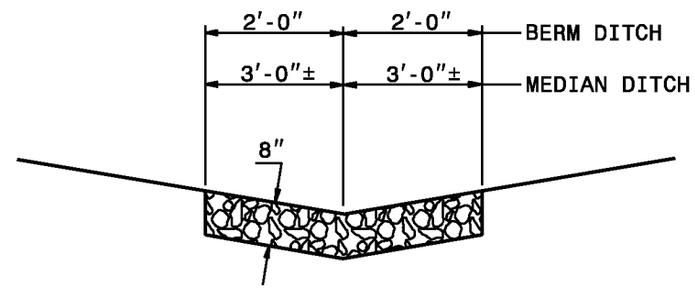

MEDIAN OR BERM DITCH

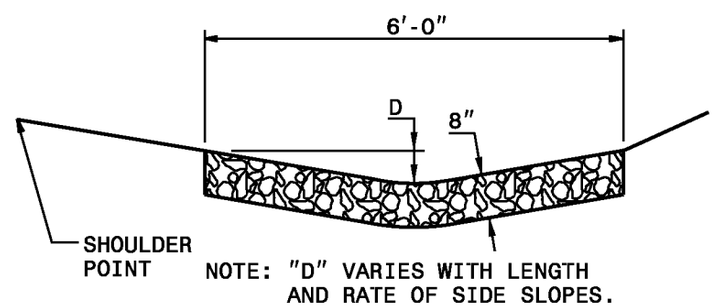

SIDE DITCH

STATE OF
NORTH CAROLINA
DEPT. OF TRANSPORTATION
DIVISION OF HIGHWAYS
RALEIGH, N.C.

1-12

ENGLISH STANDARD DRAWING FOR

DRAINAGE DITCHES WITH CLASS 'A' RIP RAP

SHEET 1 OF 1

876.03

STATE OF
NORTH CAROLINA
DEPT. OF TRANSPORTATION
DIVISION OF HIGHWAYS
RALEIGH, N.C.

1-12

ENGLISH STANDARD DRAWING FOR

DRAINAGE DITCHES WITH CLASS 'B' RIP RAP

SHEET 1 OF 1

876.04

GENERAL NOTES:

-USE CLASS 'B' RIP RAP.

-CONSTRUCT WIDTH AND SHAPE OF THE DITCHES AS SHOWN OR DIRECTED BY THE ENGINEER.

-USE GEOTEXTILE UNDER CLASS 'B' RIP RAP IF SPECIFIED ON PLANS.

*AS SPECIFIED ON PLANS.

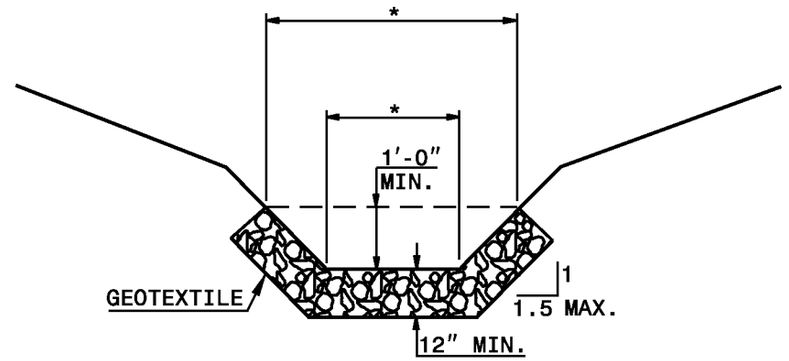

SIDE DRAINS, BASE DITCH OR OTHER OUTLET DITCHES

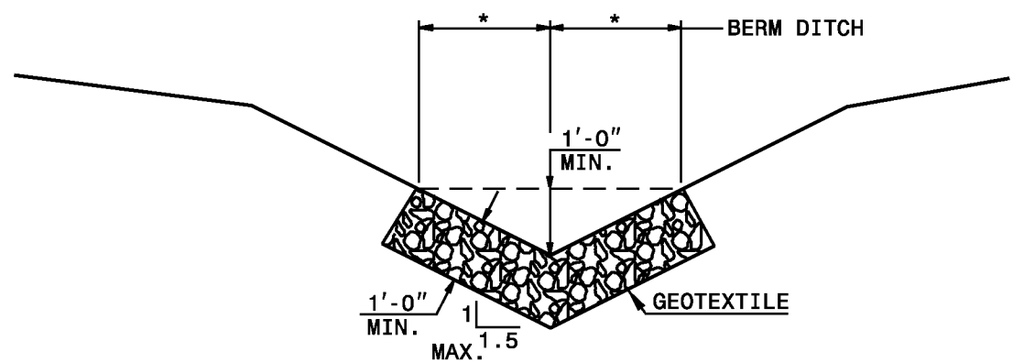

VEE DITCH

STATE OF
NORTH CAROLINA
DEPT. OF TRANSPORTATION
DIVISION OF HIGHWAYS
RALEIGH, N.C.

1-12

ENGLISH STANDARD DRAWING FOR

DRAINAGE DITCHES WITH CLASS 'B' RIP RAP

SHEET 1 OF 1

876.04