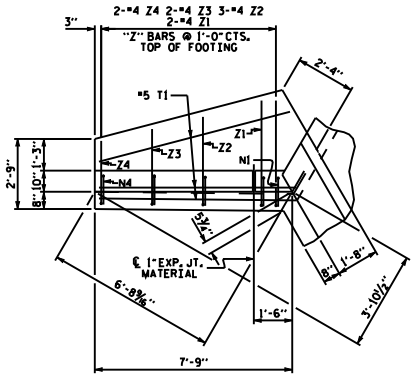

PLAN W2

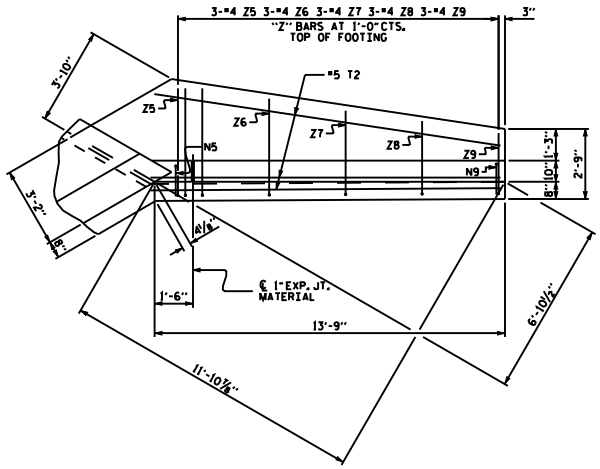

PLAN W1

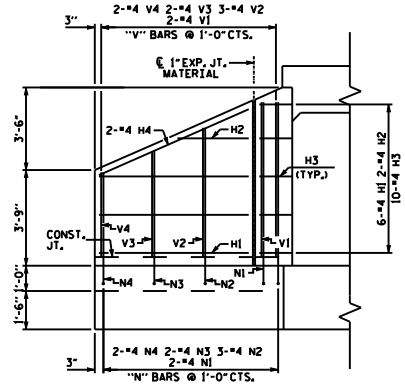

ELEVATION W2

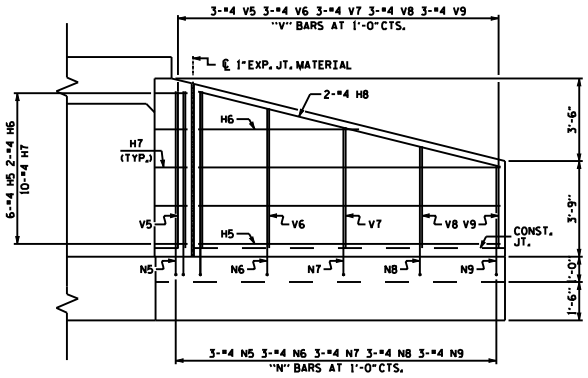

ELEVATION W1

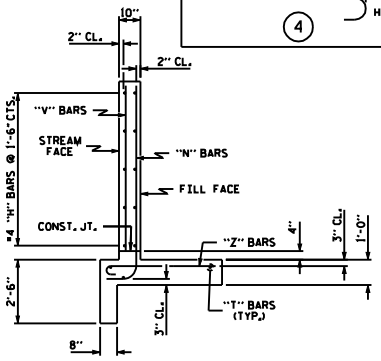

TYPICAL WING SECTION

BAR TYPES

ALL BAR DIMENSIONS ARE OUT TO OUT.

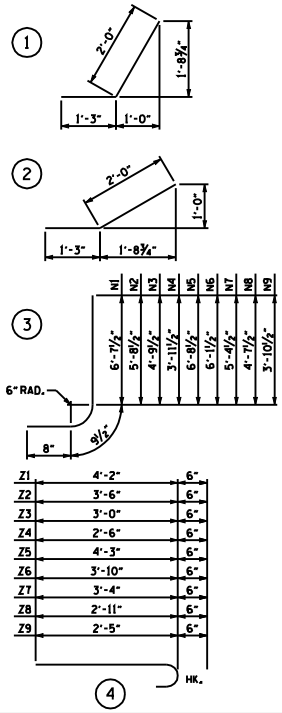

BILL OF MATERIAL

BAR	NO.	SIZE	TYPE	LENGTH	WEIGHT
H1	12	#4	STR	5'-10"	47
H2	4	#4	STR	2'-9"	7
H3	20	#4	1	3'-3"	43
H4	4	#4	STR	6'-5"	17
H5	12	#4	STR	11'-10"	95
H6	4	#4	STR	6'-3"	17
H7	20	#4	2	3'-3"	43
H8	4	#4	STR	12'-2"	33
N1	4	#4	3	8'-1"	22
N2	6	#4	3	7'-2"	29
N3	4	#4	3	6'-3"	17
N4	4	#4	3	5'-5"	14
N5	6	#4	3	8'-2"	33
N6	6	#4	3	7'-7"	30
N7	6	#4	3	6'-10"	27
N8	6	#4	3	6'-1"	24
N9	6	#4	3	5'-4"	21
T1	6	#5	STR	7'-9"	48
T2	6	#5	STR	13'-9"	86
V1	4	#4	STR	6'-1"	16
V2	6	#4	STR	5'-1"	20
V3	4	#4	STR	4'-2"	11
V4	4	#4	STR	3'-4"	9
V5	6	#4	STR	6'-2"	25
V6	6	#4	STR	5'-6"	22
V7	6	#4	STR	4'-9"	19
V8	6	#4	STR	4'-0"	16
V9	6	#4	STR	3'-3"	13
Z1	4	#4	4	4'-8"	12
Z2	6	#4	4	4'-0"	16
Z3	4	#4	4	3'-6"	9
Z4	4	#4	4	3'-0"	8
Z5	6	#4	4	4'-9"	19
Z6	6	#4	4	4'-4"	17
Z7	6	#4	4	3'-10"	15
Z8	6	#4	4	3'-5"	14
Z9	6	#4	4	2'-11"	12

REINFORCING STEEL FOR 4 WINGS 926 LBS

CLASS A CONCRETE
4 WINGS 14.4 CY
2 HEADWALLS 0.8 CY
2 END CURTAIN WALLS 1.0 CY
TOTAL 16.2 CY

PROJECT NO. EXAMPLE

_____ COUNTY

STATION: _____

SHEET 3 OF 3

STATE OF NORTH CAROLINA
DEPARTMENT OF TRANSPORTATION
RALEIGH

STANDARD WINGS
FOR
CONCRETE BOX CULVERT
H = 6'-0" SLOPE = 2:1
60° SKEW

REVISIONS						SHEET NO.
NO.	BY:	DATE:	NO.	BY:	DATE:	
1			3			TOTAL SHEETS
2			4			

ASSEMBLED BY : DATE :
CHECKED BY : DATE :

DRAWN BY : CCJ 11/99
CHECKED BY : RWW 03/00

STD. NO. CW6006

FIGURE 9 - 6

FIGURE 9 - 6 M

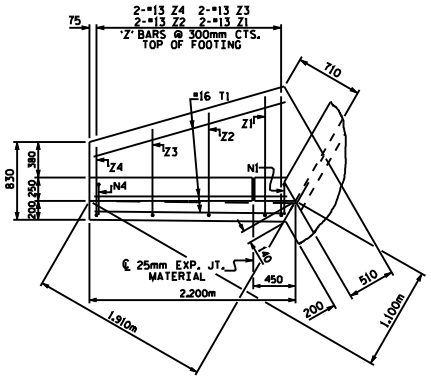

PLAN W2

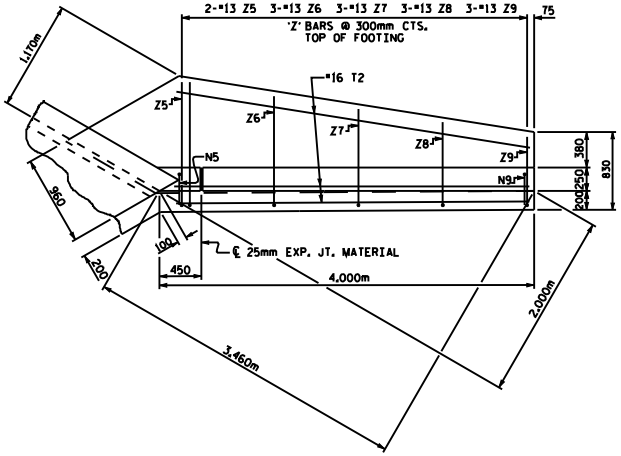

PLAN W1

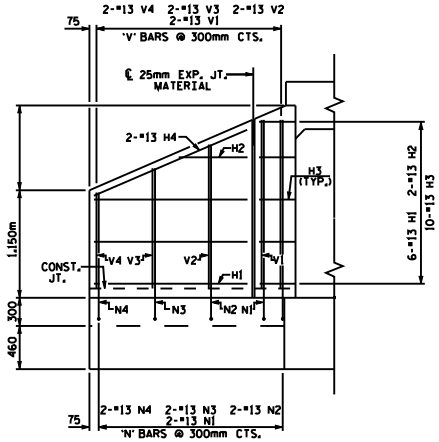

ELEVATION W2

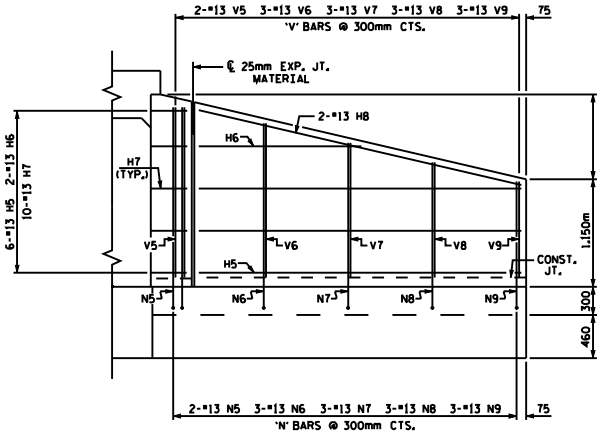

ELEVATION W1

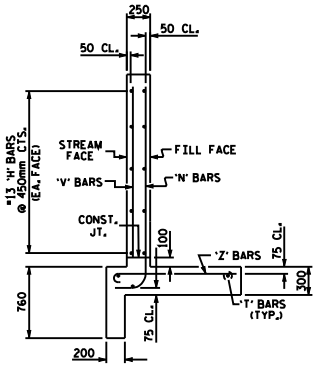

TYPICAL WING SECTION

BAR TYPES

ALL BAR DIMENSIONS ARE OUT TO OUT.

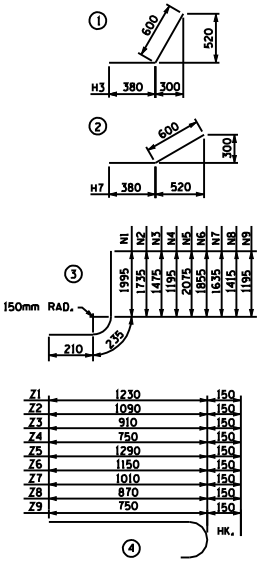

BILL OF MATERIAL

BAR	NO.	SIZE	TYPE	LENGTH	WEIGHT
H1	12	13	STR	1640	20
H2	4	13	STR	780	3
H3	20	13	1	980	19
H4	4	13	STR	1780	7
H5	12	13	STR	3440	41
H6	4	13	STR	1940	8
H7	20	13	2	980	19
H8	4	13	STR	3520	14
N1	4	13	3	2440	10
N2	4	13	3	2180	9
N3	4	13	3	1920	8
N4	4	13	3	1640	7
N5	4	13	3	2520	10
N6	6	13	3	2300	14
N7	6	13	3	2080	12
N8	6	13	3	1860	11
N9	6	13	3	1640	10
T1	6	16	STR	2200	20
T2	6	16	STR	4000	37
V1	4	13	STR	1820	7
V2	4	13	STR	1560	6
V3	4	13	STR	1300	5
V4	4	13	STR	1020	4
V5	4	13	STR	1900	8
V6	6	13	STR	1680	10
V7	6	13	STR	1460	9
V8	6	13	STR	1240	7
V9	6	13	STR	1020	6
Z1	4	13	4	1380	5
Z2	4	13	4	1240	5
Z3	4	13	4	1060	4
Z4	4	13	4	900	4
Z5	4	13	4	1440	6
Z6	6	13	4	1300	8
Z7	6	13	4	1160	7
Z8	6	13	4	1020	6
Z9	6	13	4	900	5

REINFORCING STEEL FOR 4 WING WALLS 391 kg

CLASS A CONCRETE

4 WINGS	10.6	m^3
2 HEADWALLS	0.7	m^3
2 END CURTAIN WALLS	0.7	m^3
TOTAL	12.0	m^3

FOR WING ORIENTATION, SEE BARREL STANDARD SHEET.

PROJECT NO. EXAMPLE

COUNTY

STATION:

SHEET 3 OF 3

STATE OF NORTH CAROLINA
DEPARTMENT OF TRANSPORTATION
RALEIGH

STANDARD WINGS FOR CONCRETE BOX CULVERT
H=1.800m SLOPE=2:1
60° OR 120° SKEW

ASSEMBLED BY :	DATE :
CHECKED BY :	DATE :
DRAWN BY : JLR 6/97	
CHECKED BY : VAP 6/97	

REVISIONS						SHEET NO.
NO.	BY:	DATE:	NO.	BY:	DATE:	TOTAL SHEETS
1			3			
2			4			

STD. NO. CW6018