F.A. PROJECT NO. I-85-4 ( 49 ) 174

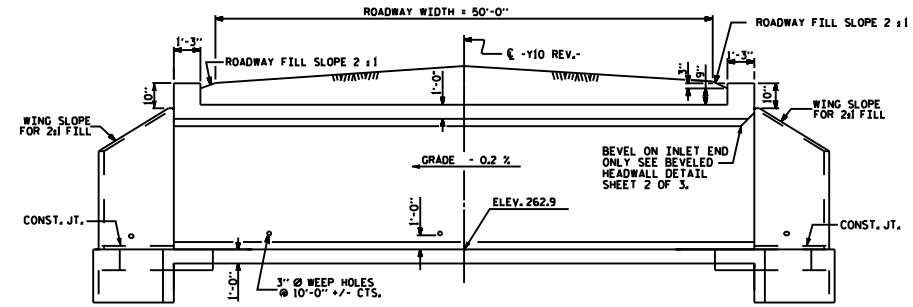


CULVERT SECTION NORMAL TO ROADWAY

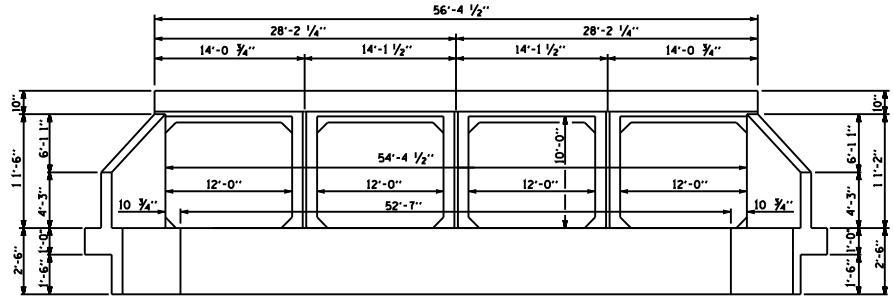


END ELEVATION NORMAL TO SKEW

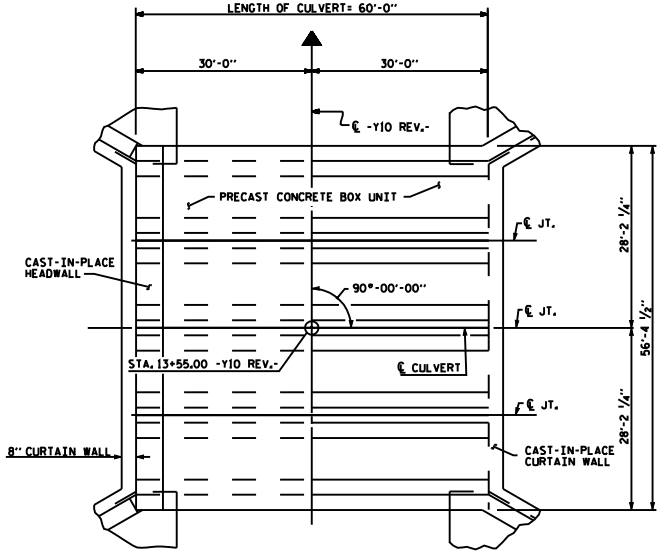


PLAN - ROOF SLAB PLAN - FLOOR SLAB

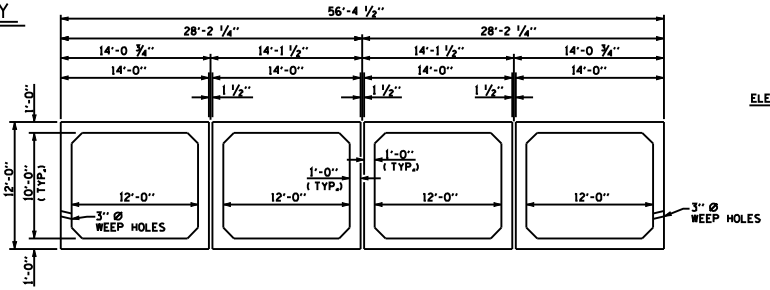


RIGHT ANGLE SECTION OF CULVERT PRECAST CONCRETE BOXES

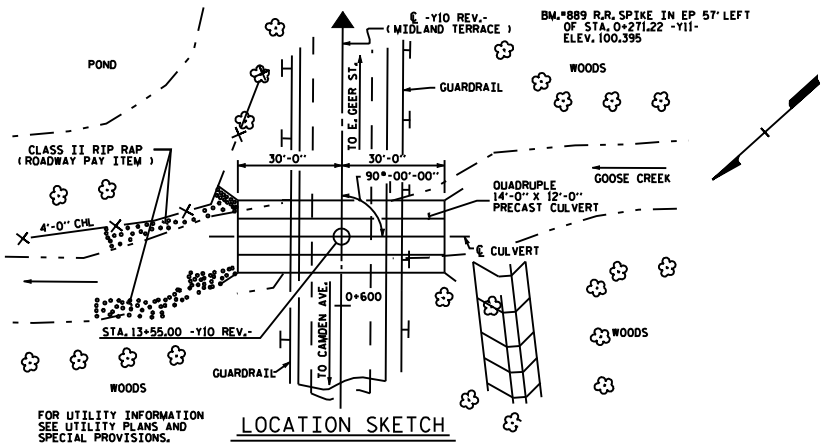


FOR UTILITY INFORMATION SEE UTILITY PLANS AND SPECIAL PROVISIONS.

LOCATION SKETCH

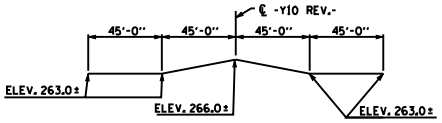


PROFILE ALONG ℄ CULVERT

## HYDROGRAPHIC DATA

GRADE POINT ELEV @ STA. 13+55.00 -Y10 REV.- = 94.132
BED ELEV. @ STA. 13+55.00 -Y10 REV.- = 88.83
ROADWAY SLOPES = 2 :1
DESIGN DISCHARGE = 2900 C.F.S.
FREQUENCY OF DESIGN FLOOD = 50 yrs.
DESIGN HIGH WATER ELEVATION = 92.20
DRAINAGE AREA = 6.4 SQ. MILES
BASIC DISCHARGE (Q100) = 3130 C.F.S.
BASIC HIGH WATER ELEVATION = 92.83

## OVERTOPPING FLOOD DATA

OVERTOPPING DISCHARGE = 2000 C.F.S.
FREQUENCY OF OVERTOPPING FLOOD = 100 yrs.
OVERTOPPING FLOOD ELEVATION = 92.8

PROJECT NO. EXAMPLE
_____ COUNTY
STATION: _____
SHEET OF

STATE OF NORTH CAROLINA
DEPARTMENT OF TRANSPORTATION
RALEIGH

PRECAST REINFORCED CONCRETE BOX CULVERT QUAD. 14 FT. X 12 FT. 90° SKEW

| REVISIONS | | | | | | SHEET NO. |
|---|---|---|---|---|---|---|
| NO. | BY: | DATE: | NO. | BY: | DATE: | |
| 1 | | | 3 | | | TOTAL SHEETS |
| 2 | | | 4 | | | |

DRAWN BY : _____ DATE : _____
CHECKED BY : _____ DATE : _____

FIGURE 9 - 8

F.A. PROJECT NO. I-85-4 ( 49 ) 174

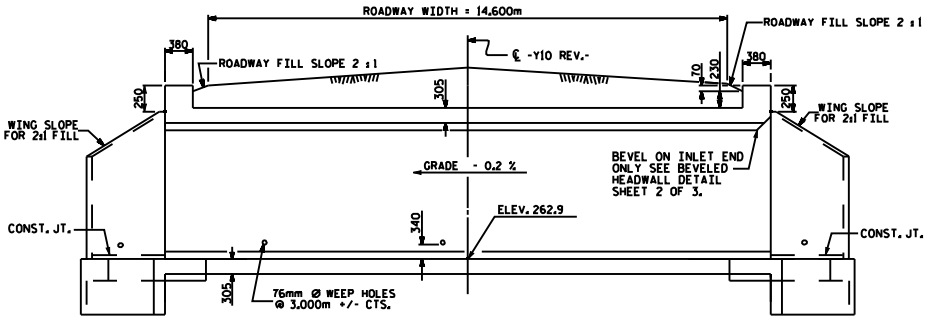


CULVERT SECTION NORMAL TO ROADWAY

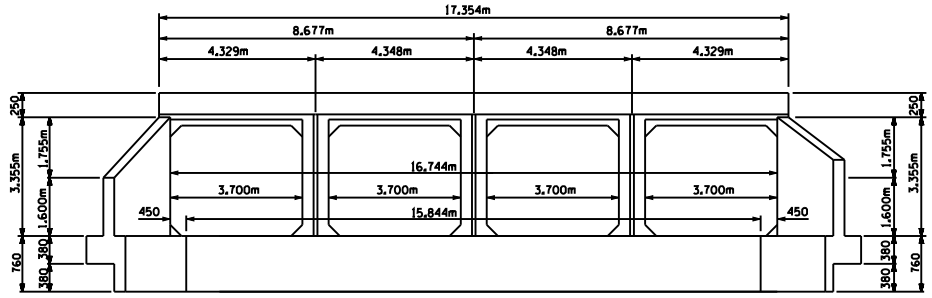


END ELEVATION NORMAL TO SKEW

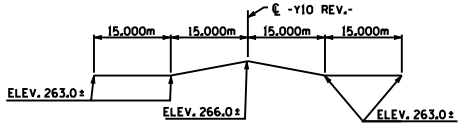


PROFILE ALONG ℄ CULVERT

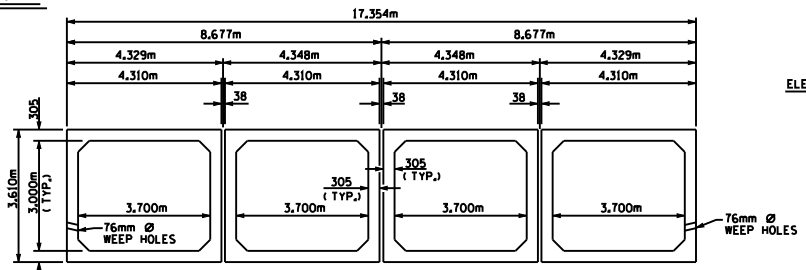


RIGHT ANGLE SECTION OF CULVERT PRECAST CONCRETE BOXES

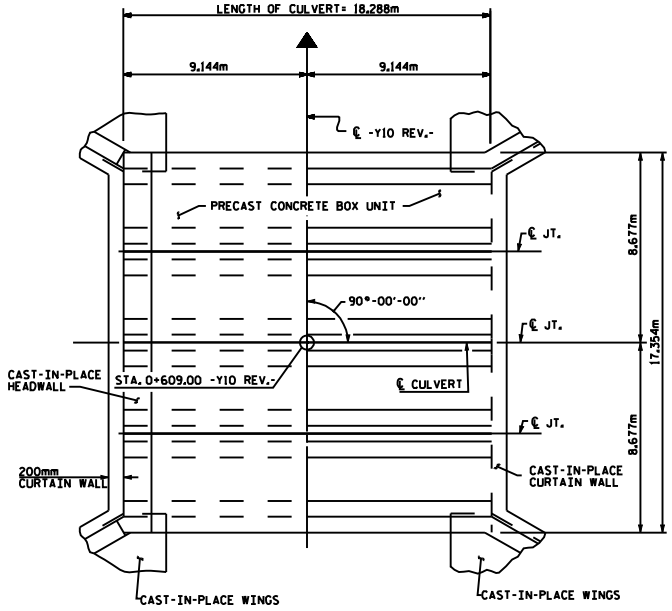


PLAN - ROOF SLAB PLAN - FLOOR SLAB

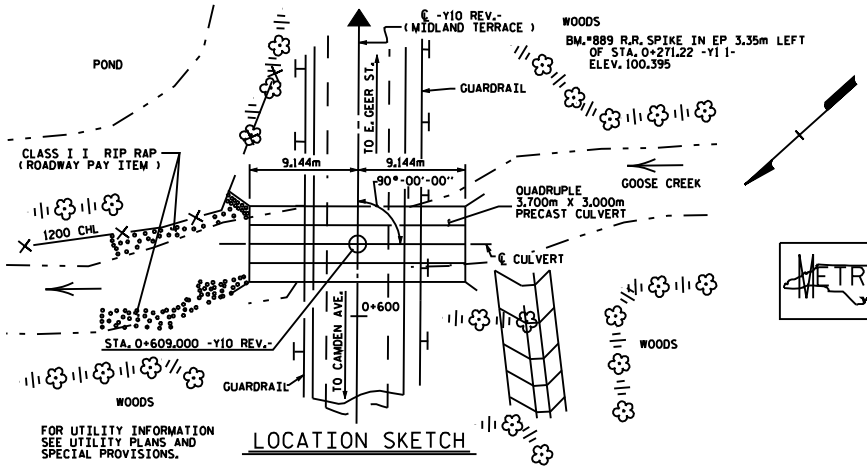


FOR UTILITY INFORMATION SEE UTILITY PLANS AND SPECIAL PROVISIONS.

LOCATION SKETCH

## HYDROGRAPHIC DATA

GRADE POINT ELEV @ STA. 0+609.000 -Y10 REV.- = 94.132
BED ELEV. @ STA. 0+609.000 -Y10 REV.- = 88.83
ROADWAY SLOPES = 2 : 1
DESIGN DISCHARGE = 72 $m^3/s$.
FREQUENCY OF DESIGN FLOOD = 50 yrs.
DESIGN HIGH WATER ELEVATION = 92.20
DRAINAGE AREA = 12.15 sq. Km
BASIC DISCHARGE (0100) = 88 $m^3/s$.
BASIC HIGH WATER ELEVATION = 92.83

## OVERTOPPING FLOOD DATA

OVERTOPPING DISCHARGE = 88 $m^3/s$.
FREQUENCY OF OVERTOPPING FLOOD = 100 yrs.
OVERTOPPING FLOOD ELEVATION = 92.8

PROJECT NO. EXAMPLE
COUNTY
STATION:

SHEET 1 OF 3

STATE OF NORTH CAROLINA
DEPARTMENT OF TRANSPORTATION
RALEIGH

PRECAST REINFORCED CONCRETE BOX CULVERT QUAD. 3.700m X 3.000m 90° SKEW

| REVISIONS | | | | | | SHEET NO. |
|---|---|---|---|---|---|---|
| NO. | BY: | DATE: | NO. | BY: | DATE: | TOTAL SHEETS |
| 1 | | | 3 | | | |
| 2 | | | 4 | | | |

DRAWN BY : DATE :
CHECKED BY : DATE :

FIGURE 9 - 8 M