BAR TYPES

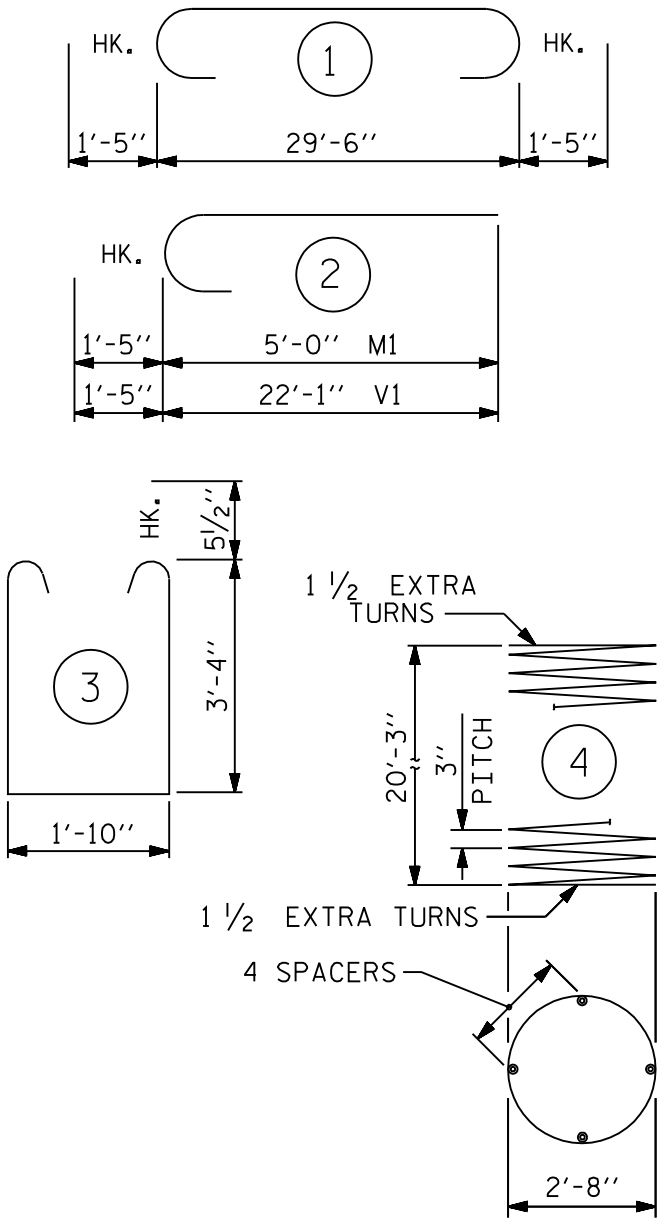

ALL BAR DIMENSIONS ARE OUT TO OUT.

BILL OF MATERIAL

BENT NO. 1

BAR	NO.	SIZE	TYPE	LENGTH	WEIGHT
B1	6	10	1	32'-4''	835
B2	12	11	STR	29'-6''	1881
B3	4	4	STR	29'-6''	79
B4	6	4	STR	2'-10''	11
M1	16	10	2	6'-5''	442
S1	86	5	3	9'-5''	845
T1	68	10	STR	9'-10''	2877
V1	16	10	2	23'-6''	1618
REINFORCING STEEL				LBS.	8588
SP-1	2	*	4	693'-1''	926
SPIRAL COLUMN					
REINFORCING STEEL				LBS.	926
CLASS "A" CONCRETE BREAKDOWN					
POUR #1	FOOTINGS			C.Y.	18.4
POUR #2	COLUMNS			C.Y.	10.0
POUR #3	CAP			C.Y.	13.3
CLASS "A" CONCRETE				C.Y.	41.7
FOUNDATION EXCAVATION					LUMP SUM

* THE SP-1 SPIRAL REINFORCING STEEL SHALL BE W20 OR D-20 COLD DRAWN WIRE OR #4 PLAIN OR DEFORMED BAR.

SPIRAL COLUMN REINFORCING STEEL QUANTITIES FOR 3'-0'' X 20' COLUMN

SPIRAL HEIGHT = 20'-0'' + 3'' EXTENSION INTO CAP = 20'-3''

SPIRAL TURNS = 20.25' X 12'' ÷ 3'' = 81 TURNS

TOTAL TURNS = 81 TURNS + 2 (1 1/2) TURNS = 84 TURNS

$$\text{SPIRAL LENGTH} = \frac{84 \times \sqrt{[(36'' - 4\tfrac{1}{2}'')\pi]^2 + (3'')^2}}{12''} = 693'\text{-}1''$$

SPIRAL WEIGHT = (693.08 X 0.668 LBS./FT.) X 2 COLS. = 926 LBS.

EXAMPLE - BILL OF MATERIAL

FIGURE 10 – 9

BAR TYPES

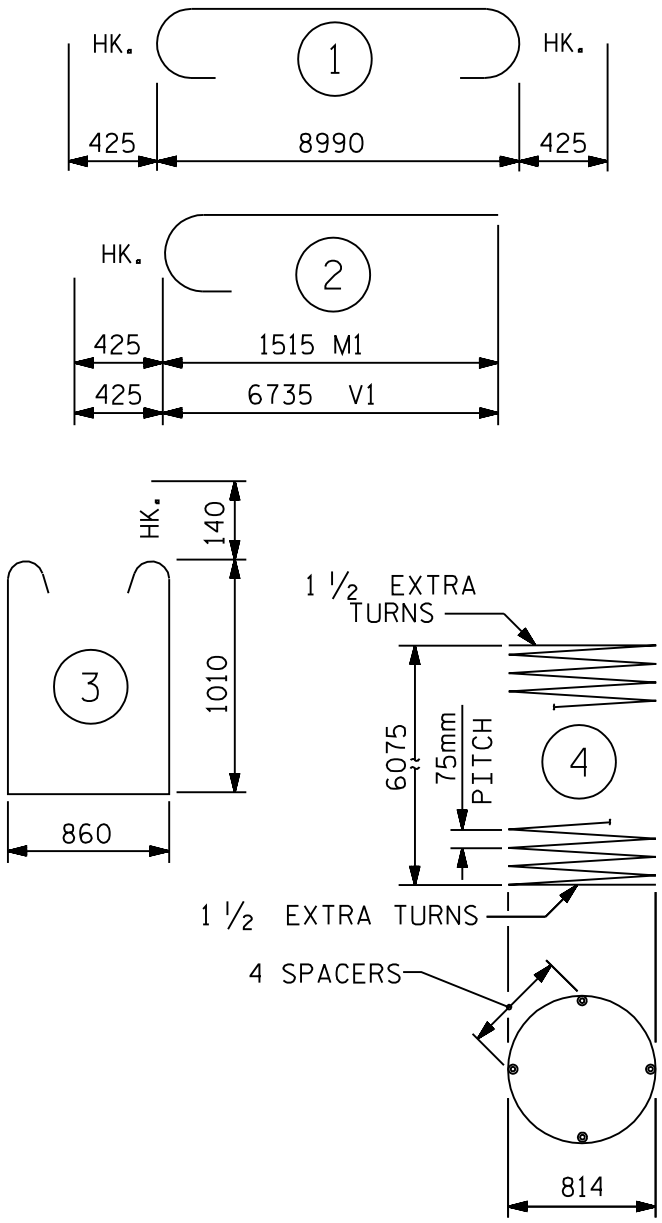

ALL BAR DIMENSIONS ARE OUT TO OUT.

BILL OF MATERIAL

BENT NO. 1

BAR	NO.	SIZE	TYPE	LENGTH	WEIGHT
B1	6	32	1	9840	328
B2	12	36	STR	9000	854
B3	4	13	STR	9000	36
B4	6	13	STR	860	5
M1	16	32	2	1940	199
S1	86	16	3	3160	422
T1	68	32	STR	3000	1306
V1	16	32	2	7160	734
REINFORCING STEEL				kg	3934
SP-1	2	**	4	211,220	420
SPIRAL COLUMN					
REINFORCING STEEL				kg	420
CLASS "A" CONCRETE BREAKDOWN					
POUR #1 FOOTINGS				m^3	14.1
POUR #2 COLUMNS				m^3	7.6
POUR #3 CAP				m^3	10.2
CLASS "A" CONCRETE				m^3	31.9
FOUNDATION EXCAVATION					LUMP SUM

** THE SP-1 SPIRAL REINFORCING STEEL SHALL BE W20 OR D-20 COLD DRAWN WIRE OR #13 PLAIN OR DEFORMED BAR.

SPIRAL COLUMN REINFORCING STEEL QUANTITIES FOR 914mm X 6.000m COLUMN

SPIRAL HEIGHT = 6000mm + 75mm EXTENSION INTO CAP = 6075mm

SPIRAL TURNS = 6075mm ÷ 75mm = 81 TURNS

TOTAL TURNS = 81 TURNS + 2 (1 1/2) TURNS = 84 TURNS

$$\text{SPIRAL LENGTH} = 84 \times \sqrt{[(914\text{mm} - 113\text{mm})\pi]^2 + (75\text{mm})^2} = 211{,}473\text{mm}$$

SPIRAL WEIGHT = (211,473mm X 0.994 kg/m) X 2 COLS. = 420 kg

EXAMPLE - BILL OF MATERIAL

FIGURE 10 – 9 M