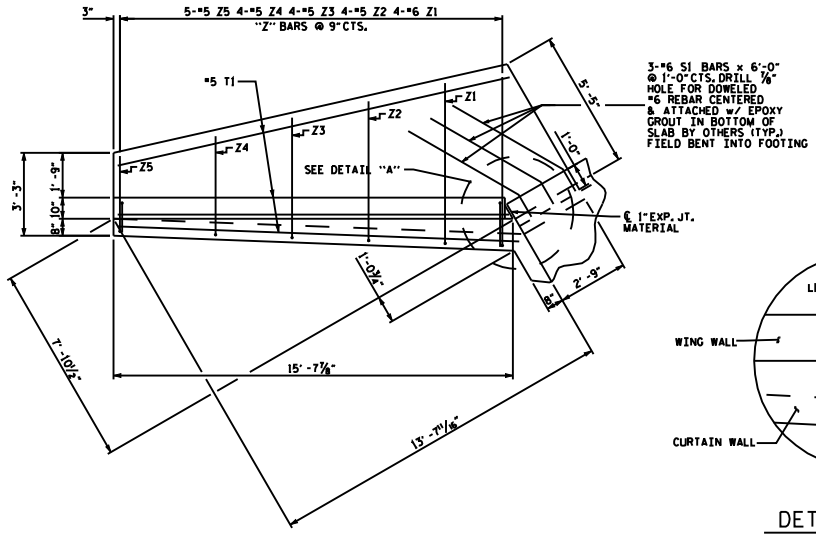

PLAN

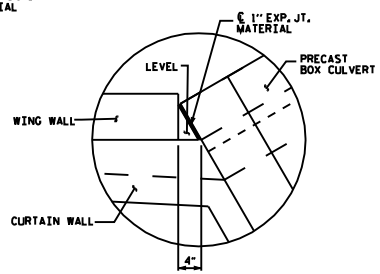

DETAIL "A"

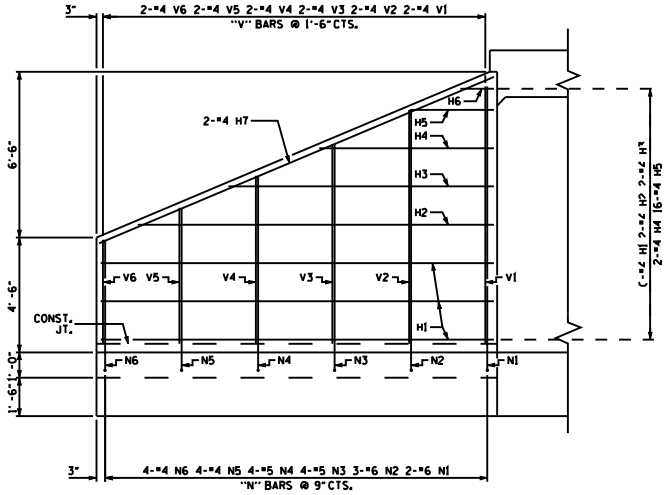

ELEVATION

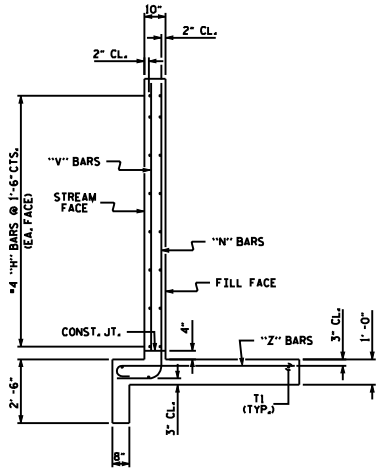

TYPICAL WING SECTION

BAR TYPES

ALL BAR DIMENSIONS ARE OUT TO OUT.

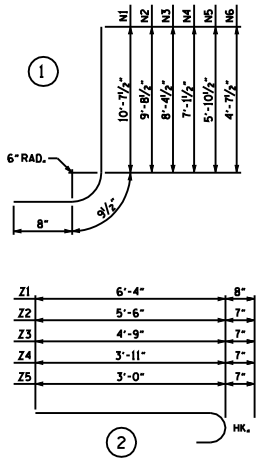

BILL OF MATERIAL

BAR	NO.	SIZE	TYPE	LENGTH	WEIGHT
H1	24	#4	STR	15'-5"	247
H2	8	#4	STR	13'-11"	74
H3	8	#4	STR	10'-4"	55
H4	8	#4	STR	6'-10"	37
H5	8	#4	STR	3'-3"	17
H6	8	#4	STR	1'-3"	7
H7	8	#4	STR	16'-9"	90
N1	8	#6	1	12'-1"	145
N2	12	#6	1	11'-2"	201
N3	16	#5	1	9'-10"	164
N4	16	#5	1	8'-7"	143
N5	16	#4	1	7'-4"	78
N6	16	#4	1	6'-1"	65
S1	12	#6	STR	6'-0"	108
T1	12	#5	STR	15'-9"	197
V1	8	#4	STR	10'-1"	54
V2	8	#4	STR	9'-2"	49
V3	8	#4	STR	7'-10"	42
V4	8	#4	STR	6'-7"	35
V5	8	#4	STR	5'-4"	29
V6	8	#4	STR	4'-1"	22
Z1	16	#6	2	7'-0"	168
Z2	16	#5	2	6'-1"	102
Z3	16	#5	2	5'-4"	89
Z4	16	#5	2	4'-6"	75
Z5	20	#5	2	3'-7"	75

REINFORCING STEEL FOR 4 WINGS 2368 LBS

CLASS A CONCRETE
4 WINGS 31.2 CY
2 HEADWALLS CY
END CURTAIN WALLS CY
TOTAL CY

PROJECT NO. _____

_____ COUNTY

STATION: _____

STATE OF NORTH CAROLINA
DEPARTMENT OF TRANSPORTATION
RALEIGH

STANDARD WINGS
FOR
CONCRETE BOX CULVERT

H = 10'-0" SLOPE = 2:1
90° SKEW

REVISIONS						SHEET NO.
NO.	BY:	DATE:	NO.	BY:	DATE:	TOTAL SHEETS
1			3			
2			4			

ASSEMBLED BY :	DATE :
CHECKED BY :	DATE :
DRAWN BY : CCJ 10/99	
CHECKED BY : RWW 03/00	

FIGURE 9 – 10

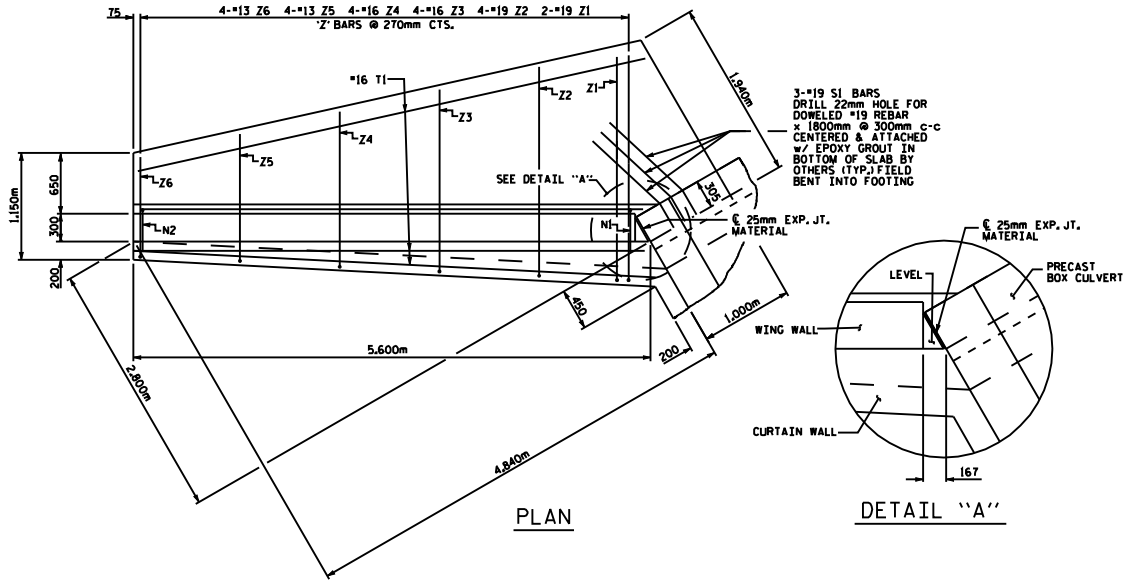

PLAN

DETAIL "A"

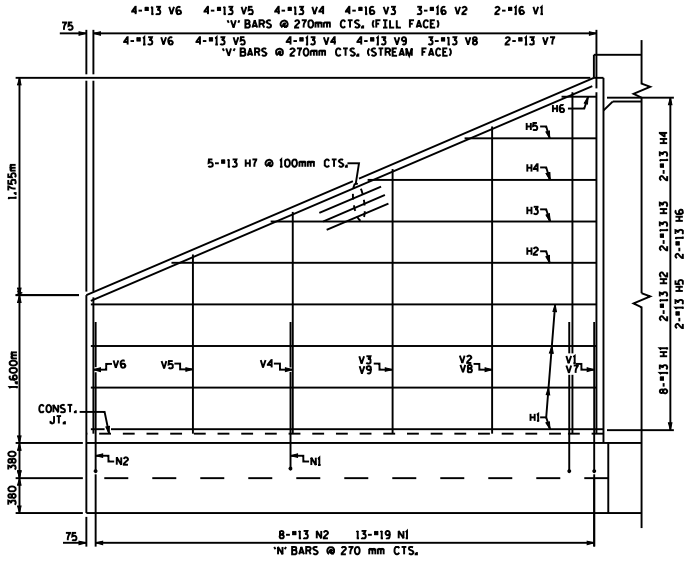

ELEVATION

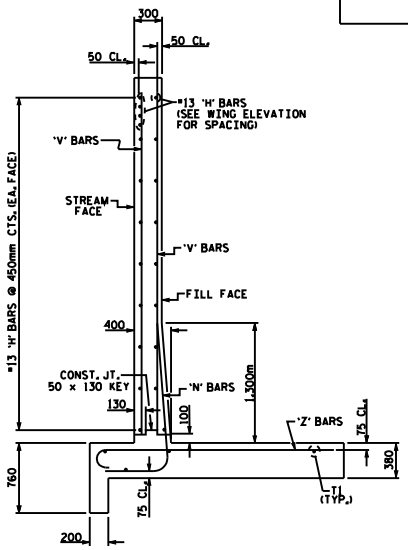

TYPICAL WING SECTION

BAR TYPES

ALL BAR DIMENSIONS ARE OUT TO OUT.

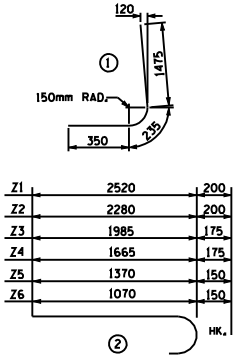

BILL OF MATERIAL

BAR	NO.	SIZE	TYPE	LENGTH	WEIGHT
H1	32	13	STR	5500	175
H2	8	13	STR	4620	37
H3	8	13	STR	3580	28
H4	8	13	STR	2540	20
H5	8	13	STR	1520	12
H6	8	13	STR	380	3
H7	20	13	STR	5480	109
N1	32	19	1	2060	147
N2	52	13	1	2060	106
S1	12	19	STR	1800	48
T1	16	16	STR	5600	139
V1	8	16	STR	3720	46
V2	12	16	STR	3360	63
V3	16	16	STR	2880	72
V4	32	13	STR	2420	77
V5	32	13	STR	1940	62
V6	32	13	STR	1480	47
V7	8	13	STR	3720	30
V8	12	13	STR	3360	40
V9	16	13	STR	2880	46
Z1	8	19	2	2720	49
Z2	16	19	2	2480	89
Z3	16	16	2	2160	54
Z4	16	16	2	1840	46
Z5	16	13	2	1520	24
Z6	16	13	2	1220	19

REINFORCING STEEL FOR 4 WINGS 1588 kg

CLASS A CONCRETE

4	WINGS	39.5	m^3
2	HEADWALLS	4.0	m^3
2	END CURTAIN WALLS	4.8	m^3
	TOTAL	48.3	m^3

PROJECT NO. EXAMPLE

_____ COUNTY

STATION: _____

SHEET 3 OF 3

STATE OF NORTH CAROLINA
DEPARTMENT OF TRANSPORTATION
RALEIGH

WINGS FOR PRECAST REINFORCED CONCRETE BOX CULVERT
H= 3.700m SLOPE= 2 : 1
90° SKEW

REVISIONS						SHEET NO.
NO.	BY:	DATE:	NO.	BY:	DATE:	TOTAL SHEETS
1			3			
2			4			

ASSEMBLED BY : DATE :
CHECKED BY : DATE :

FIGURE 9 - 10 M