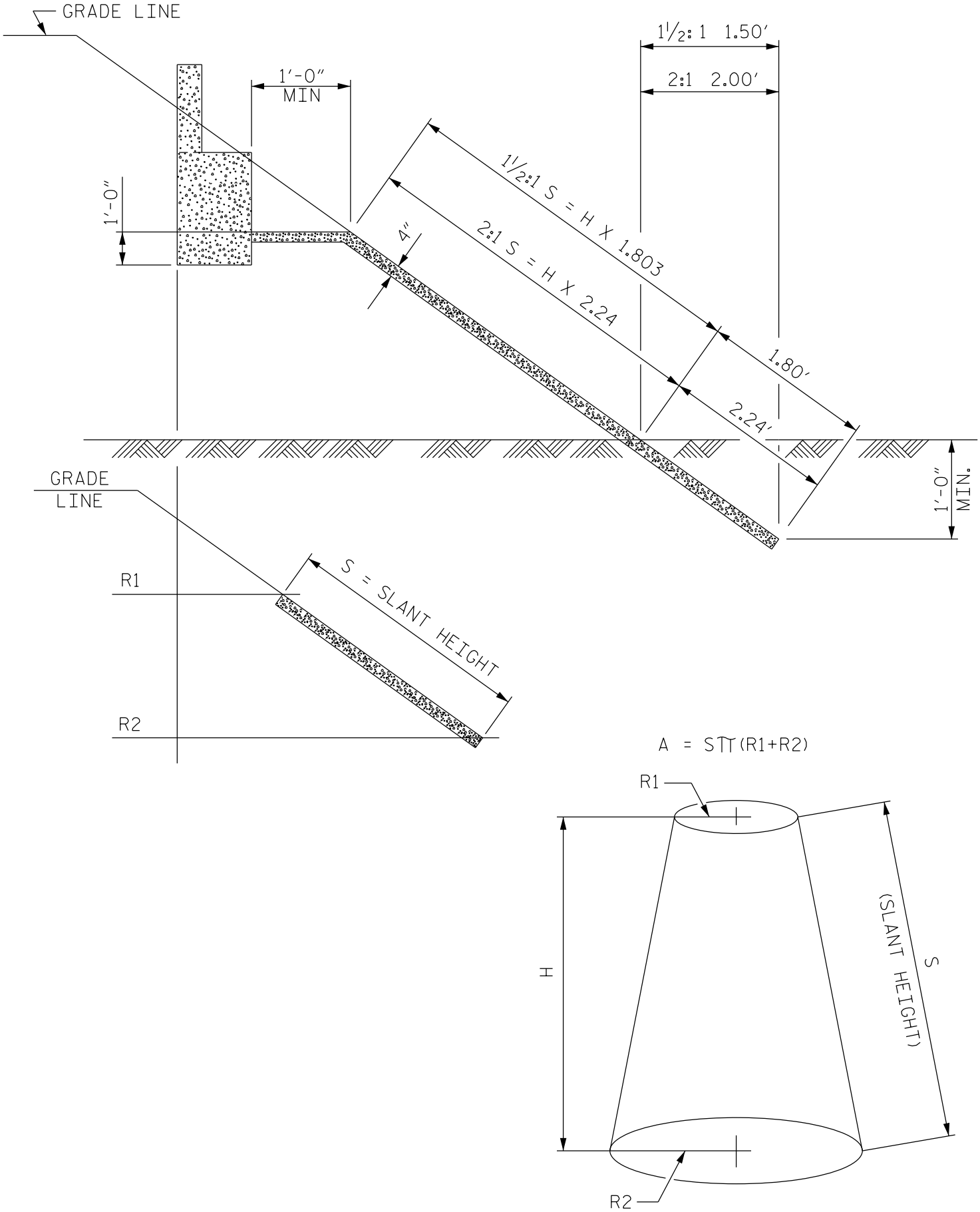

CONCRETE SLOPE PROTECTION
(4'-0" DEEP END BENT CAPS)

FIGURE 12 – 23a

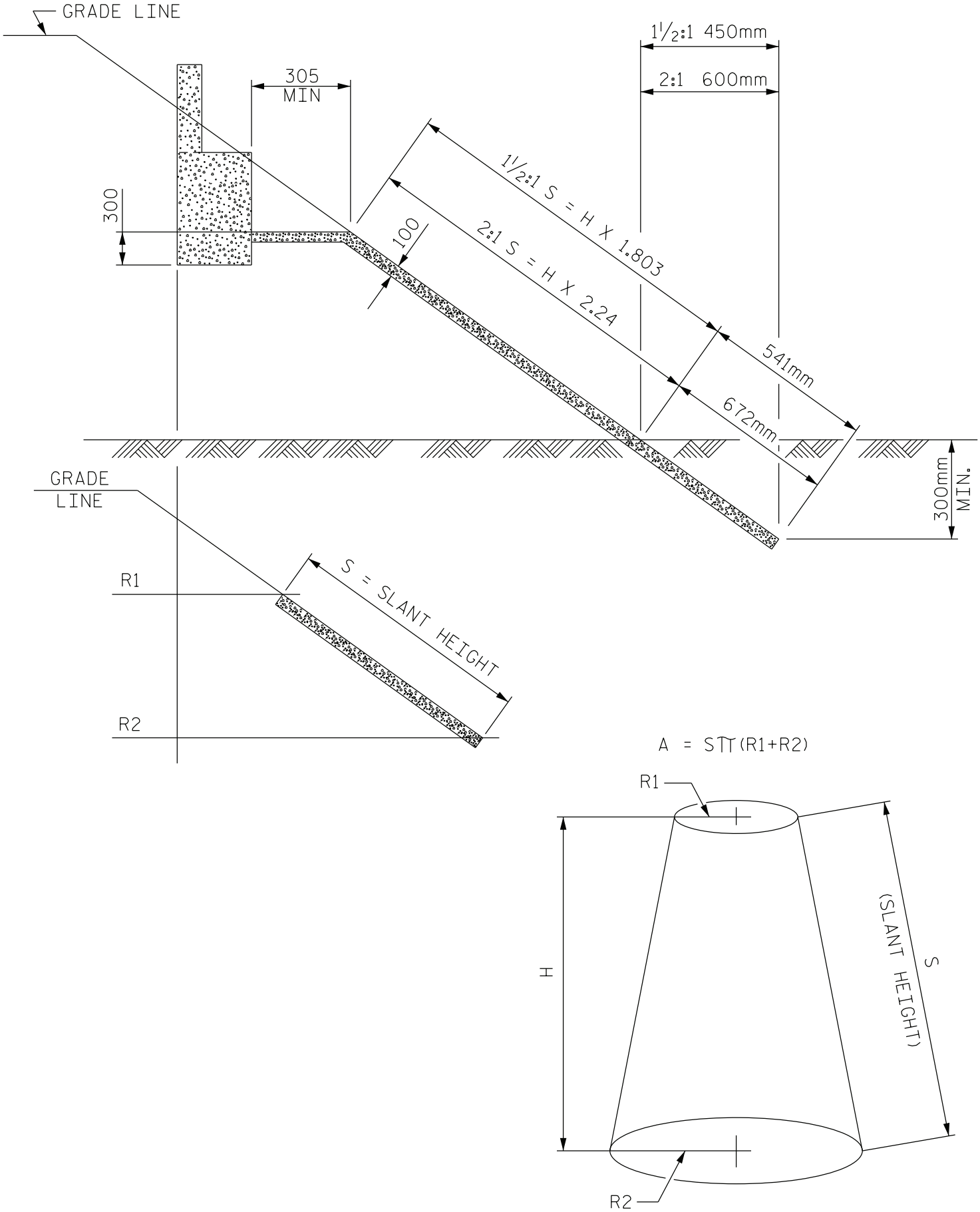

CONCRETE SLOPE PROTECTION
(1.220m DEEP END BENT CAPS)

FIGURE 12 – 23a M