FIGURE 9 - 6

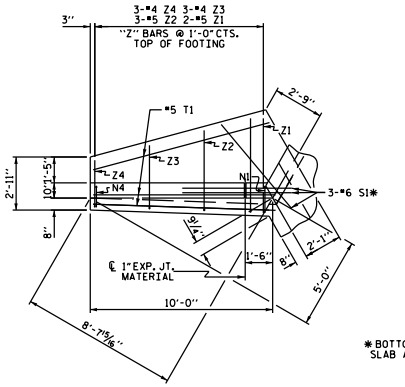

PLAN W2

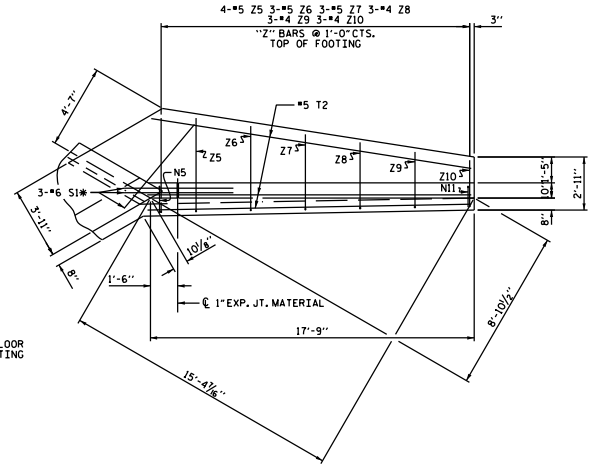

PLAN W1

* BOTTOM OF FLOOR SLAB AND FOOTING

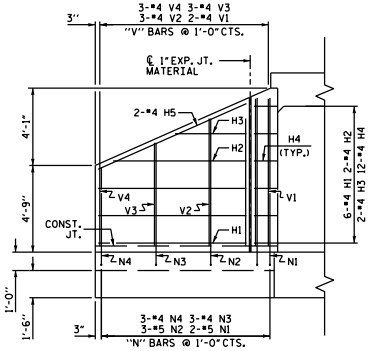

ELEVATION W2

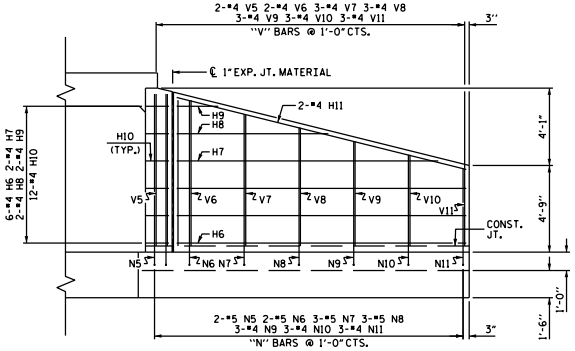

ELEVATION W1

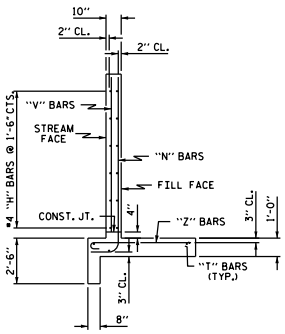

TYPICAL WING SECTION

BAR TYPES

ALL BAR DIMENSIONS ARE OUT TO OUT.

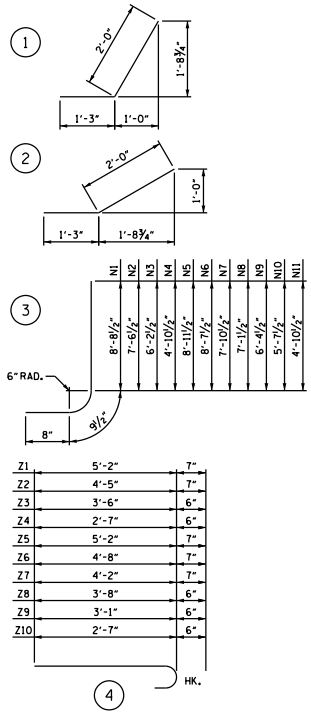

BILL OF MATERIAL

BAR	NO.	SIZE	TYPE	LENGTH	WEIGHT
H1	12	#4	STR	8'-1"	65
H2	4	#4	STR	7'-3"	19
H3	4	#4	STR	3'-11"	10
H4	24	#4	1	3'-3"	52
H5	4	#4	STR	8'-10"	24
H6	12	#4	STR	15'-10"	127
H7	4	#4	STR	14'-4"	38
H8	4	#4	STR	8'-3"	22
H9	4	#4	STR	2'-3"	6
H10	24	#4	2	3'-3"	52
H11	4	#4	STR	16'-4"	44
N1	4	#5	3	10'-2"	42
N2	6	#5	3	9'-0"	56
N3	6	#4	3	7'-8"	31
N4	6	#4	3	6'-4"	25
N5	4	#5	3	10'-5"	43
N6	4	#5	3	10'-1"	42
N7	6	#5	3	9'-4"	58
N8	6	#5	3	8'-7"	54
N9	6	#4	3	7'-10"	31
N10	6	#4	3	7'-1"	28
N11	6	#4	3	6'-4"	25
S1	12	#6	STR	6'-0"	108
T1	6	#5	STR	10'-0"	63
T2	6	#5	STR	17'-9"	111
V1	4	#4	STR	8'-1"	22
V2	6	#4	STR	7'-0"	28
V3	6	#4	STR	5'-8"	23
V4	6	#4	STR	4'-4"	17
V5	4	#4	STR	8'-4"	22
V6	4	#4	STR	8'-0"	21
V7	6	#4	STR	7'-3"	29
V8	6	#4	STR	6'-6"	26
V9	6	#4	STR	5'-9"	23
V10	6	#4	STR	5'-0"	20
V11	6	#4	STR	4'-3"	17
Z1	4	#5	4	5'-9"	24
Z2	6	#5	4	5'-0"	31
Z3	6	#4	4	4'-0"	16
Z4	6	#4	4	3'-1"	12
Z5	8	#5	4	5'-9"	48
Z6	6	#5	4	5'-3"	33
Z7	6	#5	4	4'-9"	30
Z8	6	#4	4	4'-2"	17
Z9	6	#4	4	3'-7"	14
Z10	6	#4	4	3'-1"	12

REINFORCING STEEL FOR 4 WINGS 1661 LBS

CLASS A CONCRETE

4 WINGS	24.3	CY
2 HEADWALLS	0.90	CY
2 END CURTAIN WALLS	0.80	CY
TOTAL	26.0	CY

PROJECT NO. EXAMPLE

_____ COUNTY

STATION: _____

STATE OF NORTH CAROLINA
DEPARTMENT OF TRANSPORTATION
RALEIGH

STANDARD WINGS
FOR
CONCRETE BOX CULVERT

H = 8'-0" SLOPE = 2:1
60° OR 120° SKEW

ASSEMBLED BY :	DATE :
CHECKED BY :	DATE :
DRAWN BY : CCJ 11/99	
CHECKED BY : RWW 03/00	

REVISIONS						SHEET NO.
NO.	BY:	DATE:	NO.	BY:	DATE:	TOTAL SHEETS
1			3			
2			4			

STD. NO. CW6008