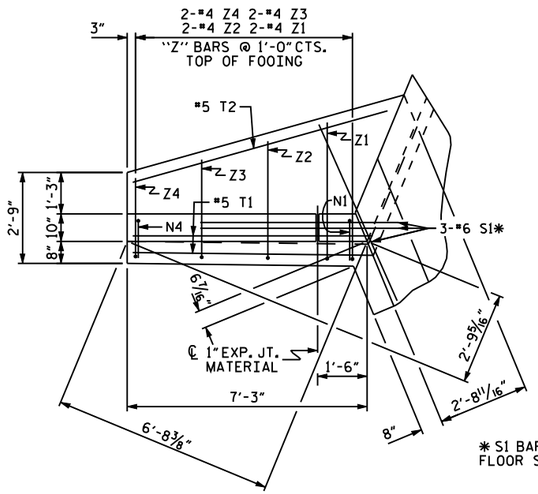

* S1 BARS @ BOTTOM OF FLOOR SLAB & FOOTING

PLAN W2

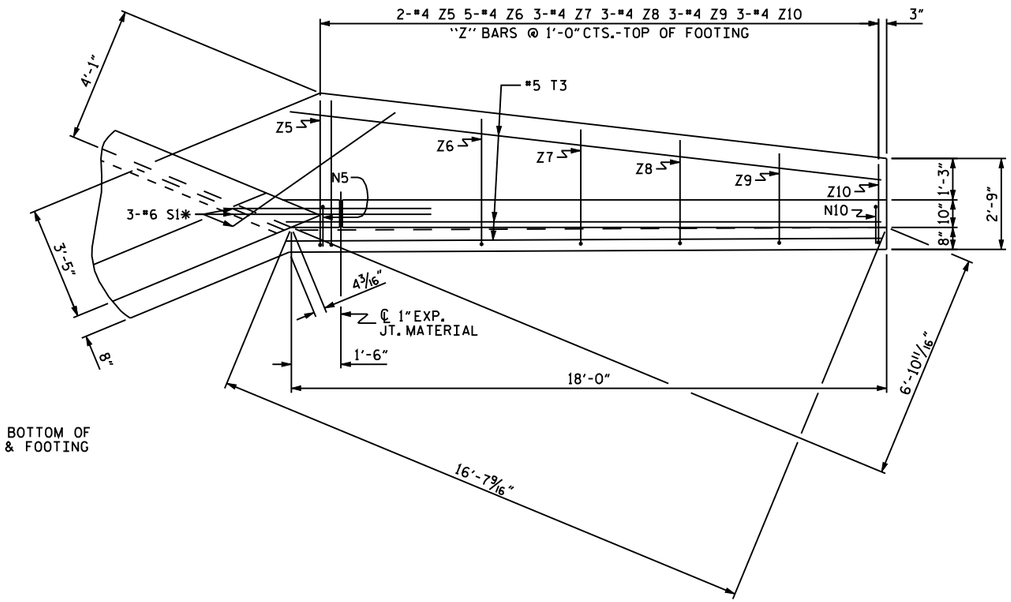

PLAN W1

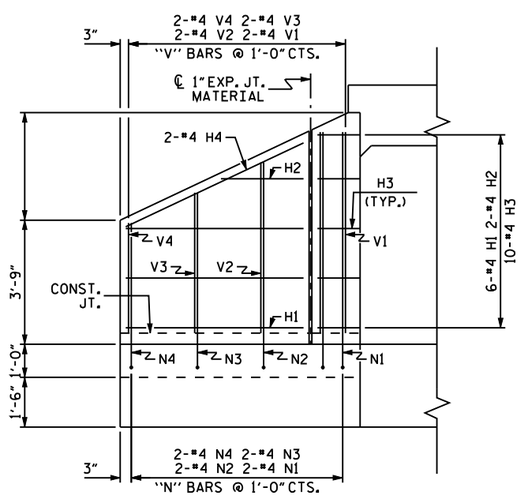

ELEVATION W2

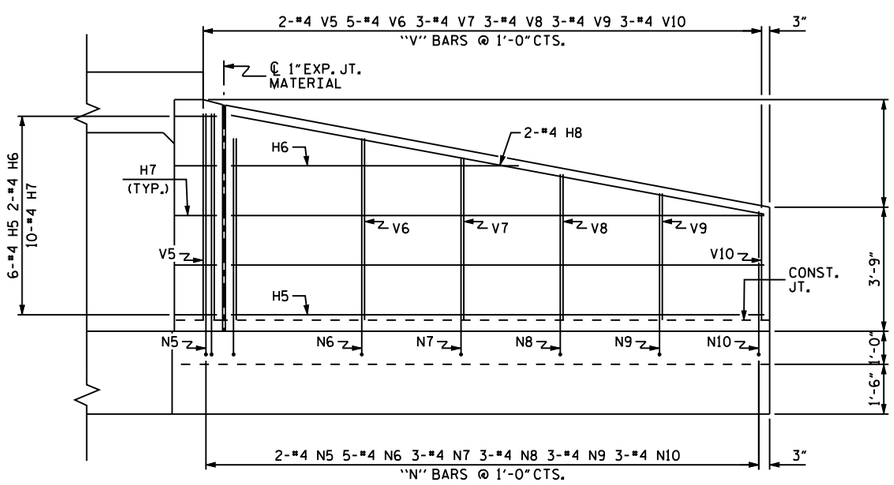

ELEVATION W1

BAR TYPES

ALL BAR DIMENSIONS ARE OUT TO OUT.

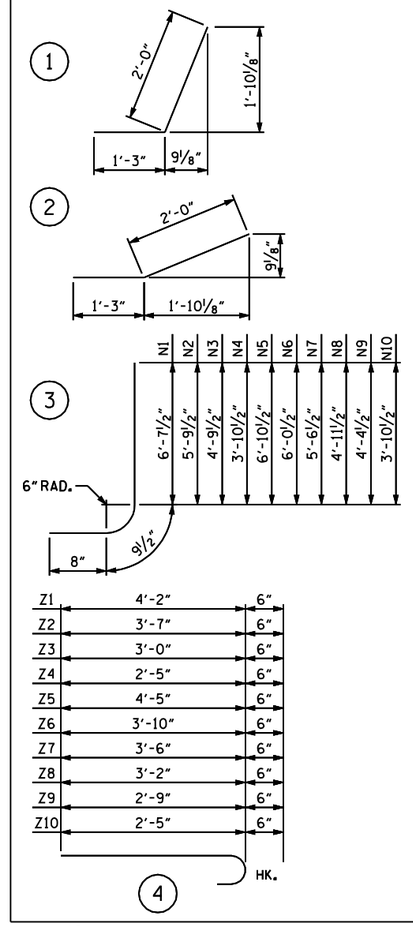

BILL OF MATERIAL

BAR	NO.	SIZE	TYPE	LENGTH	WEIGHT
H1	12	#4	STR	5'-4"	43
H2	4	#4	STR	2'-6"	7
H3	20	#4	1	3'-3"	43
H4	4	#4	STR	5'-11"	16
H5	12	#4	STR	16'-1"	129
H6	4	#4	STR	8'-8"	23
H7	20	#4	2	3'-3"	43
H8	4	#4	STR	16'-4"	44
N1	4	#4	3	8'-1"	22
N2	4	#4	3	7'-3"	19
N3	4	#4	3	6'-3"	17
N4	4	#4	3	5'-4"	14
N5	4	#4	3	8'-4"	22
N6	10	#4	3	7'-6"	50
N7	6	#4	3	7'-0"	28
N8	6	#4	3	6'-5"	26
N9	6	#4	3	5'-10"	23
N10	6	#4	3	5'-4"	21
S1	12	#6	STR	6'-0"	108
T1	4	#5	STR	7'-3"	30
T2	2	#5	STR	8'-0"	17
T3	6	#5	STR	18'-0"	113
V1	4	#4	STR	6'-1"	16
V2	4	#4	STR	5'-2"	14
V3	4	#4	STR	4'-3"	11
V4	4	#4	STR	3'-4"	9
V5	4	#4	STR	6'-3"	17
V6	10	#4	STR	5'-6"	37
V7	6	#4	STR	4'-11"	20
V8	6	#4	STR	4'-5"	18
V9	6	#4	STR	3'-10"	15
V10	6	#4	STR	3'-3"	13
Z1	4	#4	4	4'-8"	12
Z2	4	#4	4	4'-1"	11
Z3	4	#4	4	3'-6"	9
Z4	4	#4	4	2'-11"	8
Z5	4	#4	4	4'-11"	13
Z6	10	#4	4	4'-4"	29
Z7	6	#4	4	4'-0"	16
Z8	6	#4	4	3'-8"	15
Z9	6	#4	4	3'-3"	13
Z10	6	#4	4	2'-11"	12

REINFORCING STEEL FOR 4 WINGS 1166 LBS

CLASS A CONCRETE

4 WINGS	18.5	CY
2 HEADWALLS		CY
2 END CURTAIN WALLS		CY
TOTAL		CY

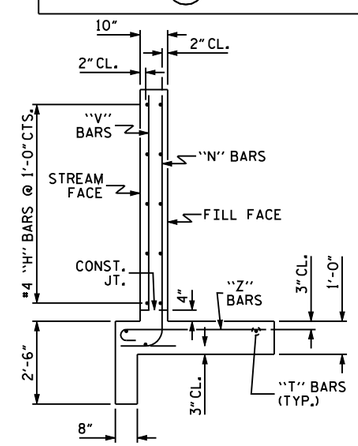

TYPICAL WING SECTION

PROJECT NO. _____

_____ COUNTY

STATION: _____

STATE OF NORTH CAROLINA
DEPARTMENT OF TRANSPORTATION
RALEIGH

STANDARD WINGS FOR CONCRETE BOX CULVERT

H = 6'-0" SLOPE = 2:1
45° OR 135° SKEW

REVISIONS						SHEET NO.
NO.	BY:	DATE:	NO.	BY:	DATE:	TOTAL SHEETS
1			3			
2			4			

ASSEMBLED BY : DATE :
CHECKED BY : DATE :

DRAWN BY : CCJ 01/00
CHECKED BY : RWW 03/00

STD. NO. CW4506