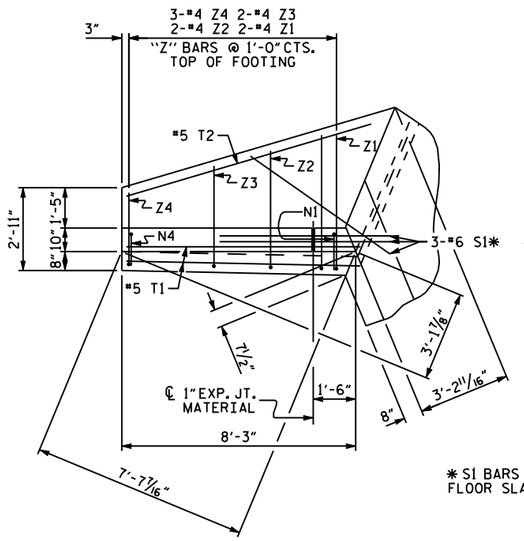

PLAN W2

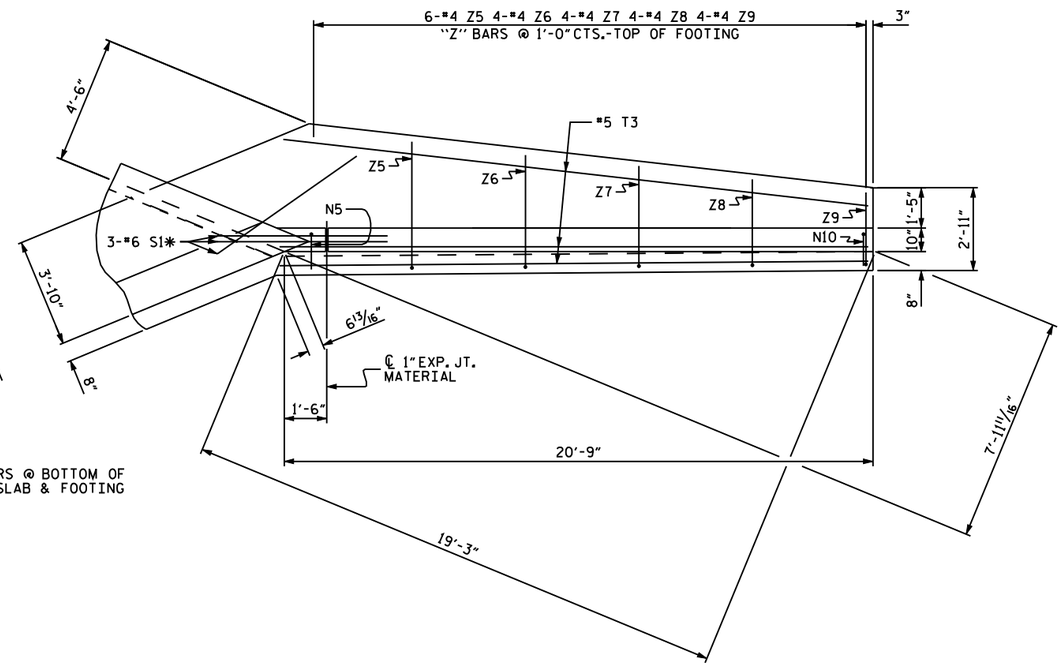

PLAN W1

* S1 BARS @ BOTTOM OF FLOOR SLAB & FOOTING

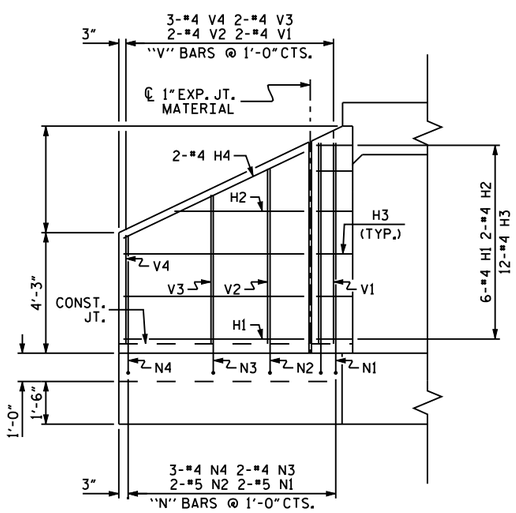

ELEVATION W2

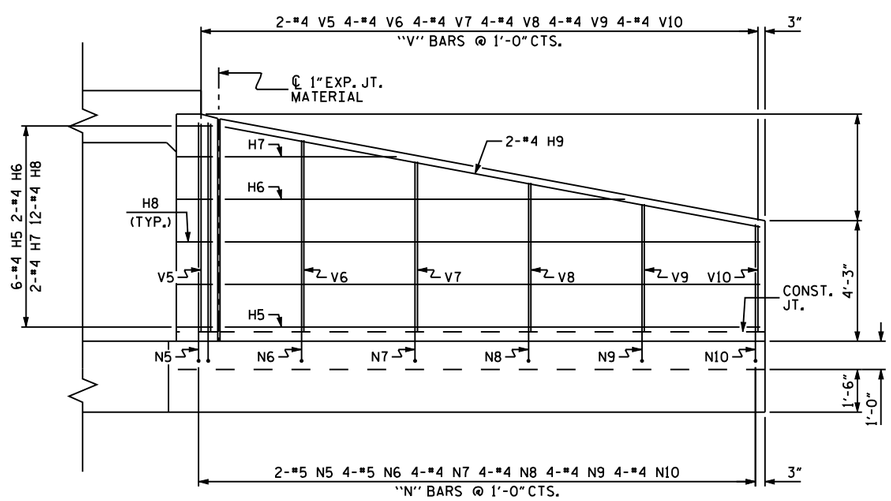

ELEVATION W1

BAR TYPES

ALL BAR DIMENSIONS ARE OUT TO OUT.

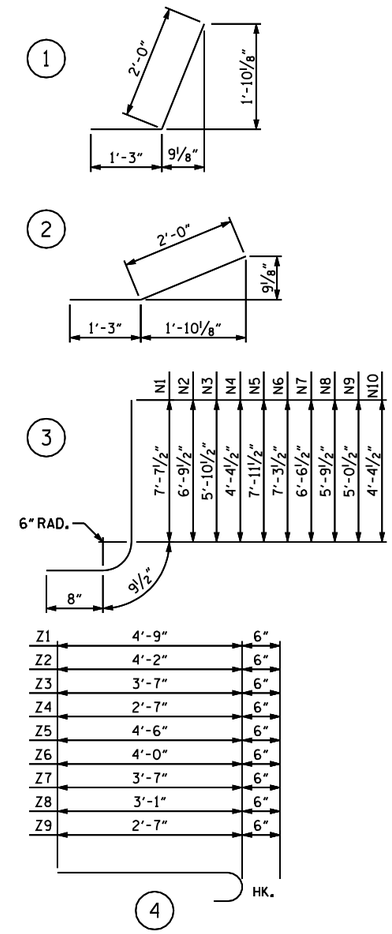

BILL OF MATERIAL

BAR	NO.	SIZE	TYPE	LENGTH	WEIGHT
H1	12	#4	STR	6'-4"	51
H2	4	#4	STR	4'-6"	12
H3	24	#4	1	3'-3"	52
H4	4	#4	STR	7'-0"	19
H5	12	#4	STR	18'-10"	151
H6	4	#4	STR	14'-1"	38
H7	4	#4	STR	6'-0"	16
H8	24	#4	2	3'-3"	52
H9	4	#4	STR	19'-2"	51
N1	4	#5	3	9'-1"	38
N2	4	#5	3	8'-3"	34
N3	4	#4	3	7'-4"	20
N4	6	#4	3	5'-7"	22
N5	4	#5	3	9'-5"	39
N6	8	#5	3	8'-9"	73
N7	8	#4	3	8'-0"	43
N8	8	#4	3	7'-3"	39
N9	8	#4	3	6'-6"	35
N10	8	#4	3	5'-10"	31
S1	12	#6	STR	6'-0"	108
T1	4	#5	STR	8'-3"	34
T2	2	#5	STR	9'-0"	19
T3	6	#5	STR	20'-9"	130
V1	4	#4	STR	7'-1"	19
V2	4	#4	STR	6'-2"	16
V3	4	#4	STR	5'-3"	14
V4	6	#4	STR	3'-9"	15
V5	4	#4	STR	7'-4"	20
V6	8	#4	STR	6'-9"	36
V7	8	#4	STR	6'-0"	32
V8	8	#4	STR	5'-3"	28
V9	8	#4	STR	4'-6"	24
V10	8	#4	STR	3'-9"	20
Z1	4	#4	4	5'-3"	14
Z2	4	#4	4	4'-8"	12
Z3	4	#4	4	4'-1"	11
Z4	6	#4	4	3'-1"	12
Z5	12	#4	4	5'-0"	40
Z6	8	#4	4	4'-6"	24
Z7	8	#4	4	4'-1"	22
Z8	8	#4	4	3'-7"	19
Z9	8	#4	4	3'-1"	16

REINFORCING STEEL FOR 4 WINGS 1501 LBS

CLASS A CONCRETE
4 WINGS 23.6 CY
2 HEADWALLS CY
2 END CURTAIN WALLS CY
TOTAL CY

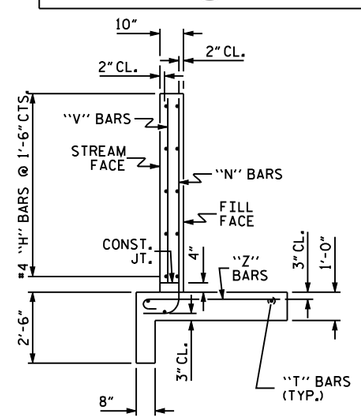

TYPICAL WING SECTION

PROJECT NO. _____

_____ COUNTY

STATION: _____

STATE OF NORTH CAROLINA
DEPARTMENT OF TRANSPORTATION
RALEIGH

STANDARD WINGS FOR CONCRETE BOX CULVERT

H = 7'-0" SLOPE = 2:1
45° OR 135° SKEW

REVISIONS						SHEET NO.
NO.	BY:	DATE:	NO.	BY:	DATE:	
1			3			TOTAL SHEETS
2			4			

ASSEMBLED BY : DATE :
CHECKED BY : DATE :

DRAWN BY : CCJ 01/00
CHECKED BY : RWW 03/00

STD. NO. CW4507