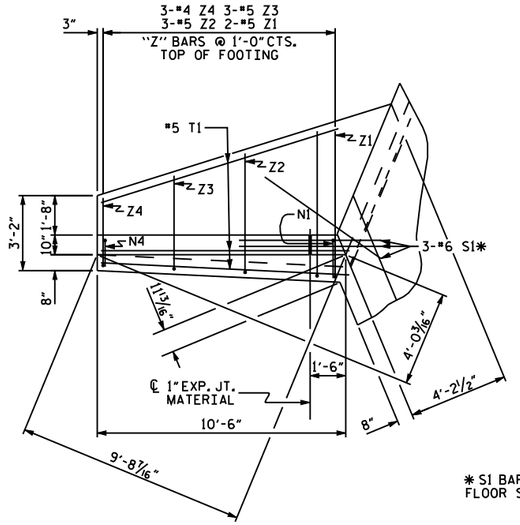

PLAN W2

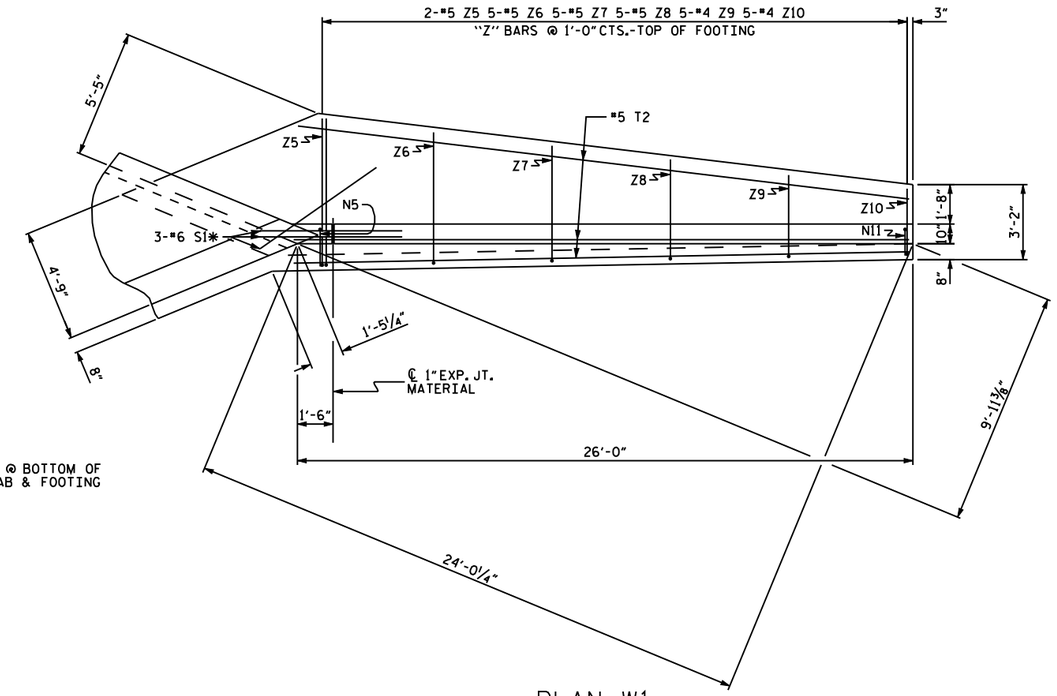

* S1 BARS @ BOTTOM OF FLOOR SLAB & FOOTING

PLAN W1

BAR TYPES

ALL BAR DIMENSIONS ARE OUT TO OUT.

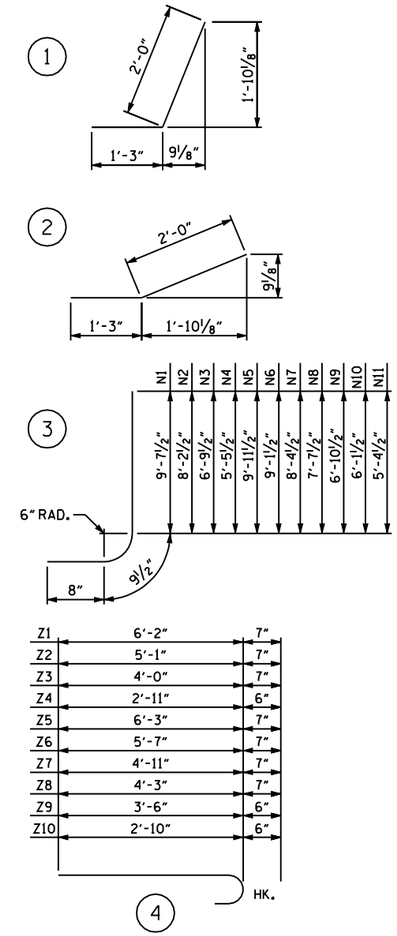

BILL OF MATERIAL

BAR	NO.	SIZE	TYPE	LENGTH	WEIGHT
H1	16	#4	STR	8'-7"	92
H2	4	#4	STR	5'-8"	15
H3	4	#4	STR	2'-6"	7
H4	28	#4	1	3'-3"	61
H5	4	#4	STR	9'-6"	25
H6	16	#4	STR	24'-1"	257
H7	4	#4	STR	16'-9"	45
H8	4	#4	STR	8'-10"	24
H9	28	#4	2	3'-3"	61
H10	4	#4	STR	24'-6"	65
N1	4	#6	3	11'-1"	67
N2	6	#6	3	9'-8"	87
N3	6	#5	3	8'-3"	52
N4	6	#4	3	6'-11"	28
N5	4	#6	3	11'-5"	69
N6	10	#6	3	10'-7"	159
N7	8	#6	3	9'-10"	118
N8	8	#5	3	9'-1"	76
N9	8	#5	3	8'-4"	70
N10	8	#5	3	7'-7"	63
N11	8	#4	3	6'-10"	37
S1	12	#6	STR	6'-0"	108
T1	6	#5	STR	10'-6"	66
T2	6	#5	STR	26'-0"	163
V1	4	#4	STR	9'-1"	24
V2	6	#4	STR	7'-8"	31
V3	6	#4	STR	6'-3"	25
V4	6	#4	STR	4'-10"	19
V5	4	#4	STR	9'-5"	25
V6	10	#4	STR	8'-6"	57
V7	8	#4	STR	7'-9"	41
V8	8	#4	STR	7'-0"	37
V9	8	#4	STR	6'-3"	33
V10	8	#4	STR	5'-6"	29
V11	8	#4	STR	4'-9"	25
Z1	4	#5	4	6'-9"	28
Z2	6	#5	4	5'-8"	35
Z3	6	#5	4	4'-7"	29
Z4	6	#4	4	3'-5"	14
Z5	4	#5	4	6'-10"	29
Z6	10	#5	4	6'-2"	64
Z7	10	#5	4	5'-6"	57
Z8	10	#5	4	4'-10"	50
Z9	10	#4	4	4'-0"	27
Z10	10	#4	4	3'-4"	22

REINFORCING STEEL FOR 4 WINGS 2516 LBS

CLASS A CONCRETE
4 WINGS 36.1 CY
2 HEADWALLS CY
2 END CURTAIN WALLS CY
TOTAL CY

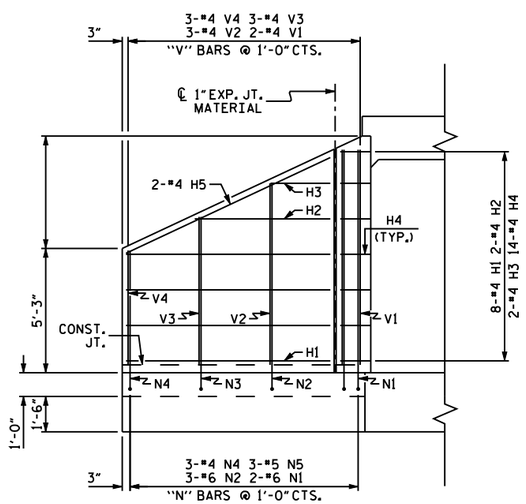

ELEVATION W2

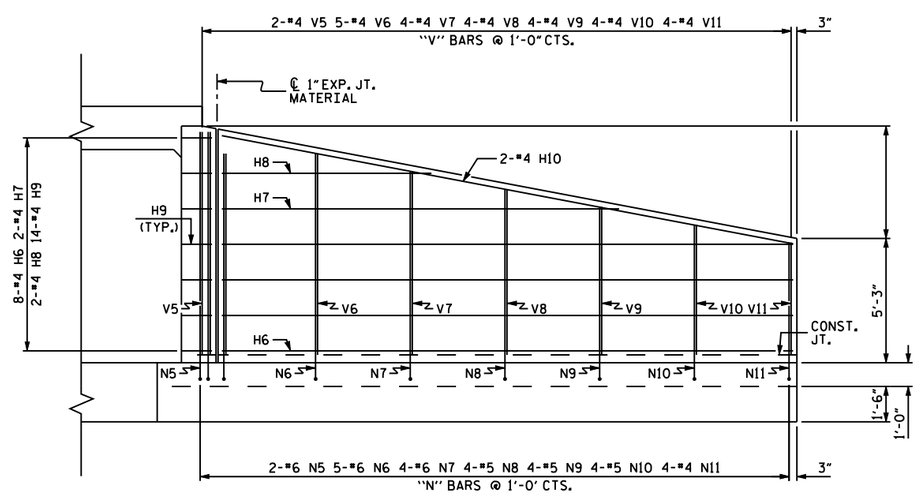

ELEVATION W1

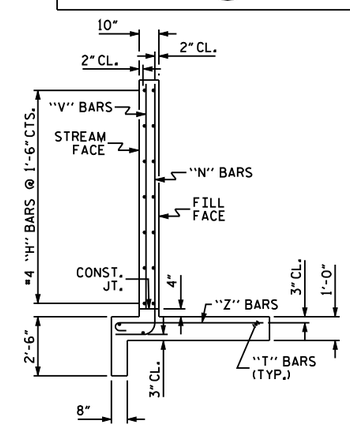

TYPICAL WING SECTION

PROJECT NO. _____

_____ COUNTY

STATION: _____

STATE OF NORTH CAROLINA
DEPARTMENT OF TRANSPORTATION
RALEIGH

STANDARD WINGS FOR CONCRETE BOX CULVERT

H = 9'-0" SLOPE = 2:1
45° OR 135° SKEW

ASSEMBLED BY :	DATE :
CHECKED BY :	DATE :
DRAWN BY : CCJ 01/00	
CHECKED BY : RWW 03/00	

REVISIONS						SHEET NO.
NO.	BY:	DATE:	NO.	BY:	DATE:	TOTAL SHEETS
1			3			
2			4			

STD. NO. CW4509