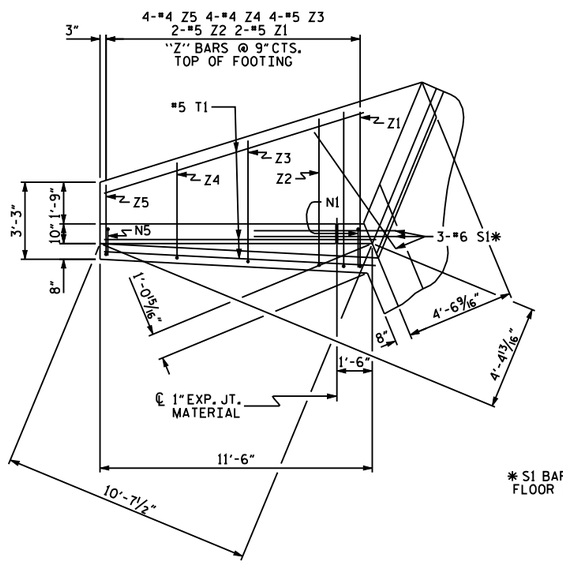

PLAN W2

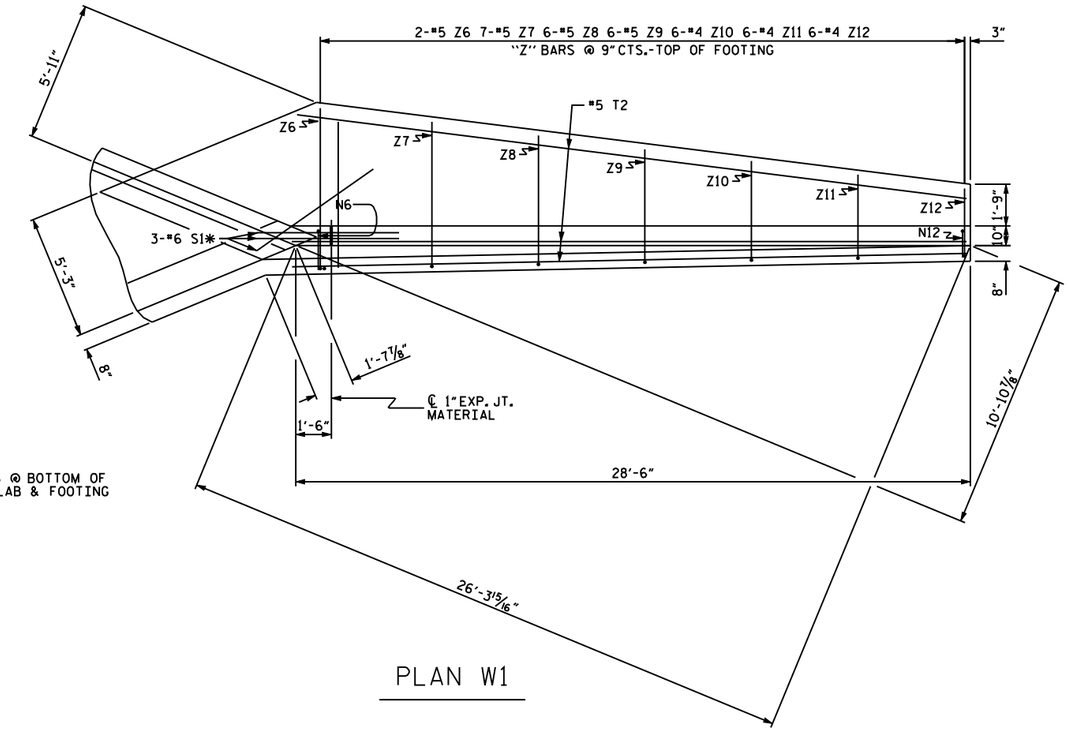

* S1 BARS @ BOTTOM OF FLOOR SLAB & FOOTING

PLAN W1

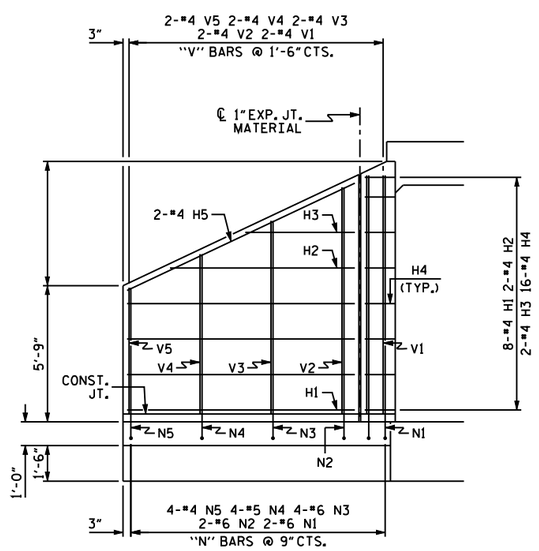

ELEVATION W2

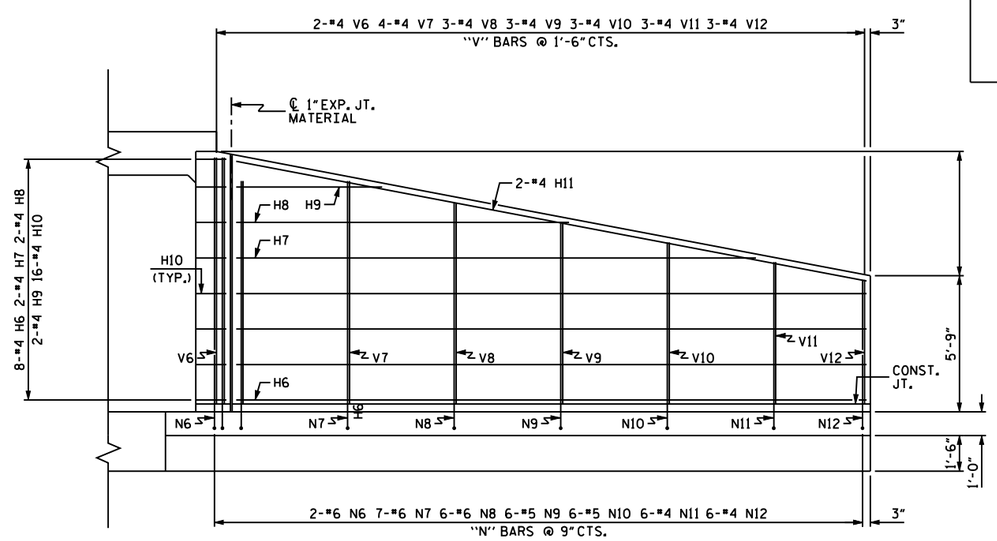

ELEVATION W1

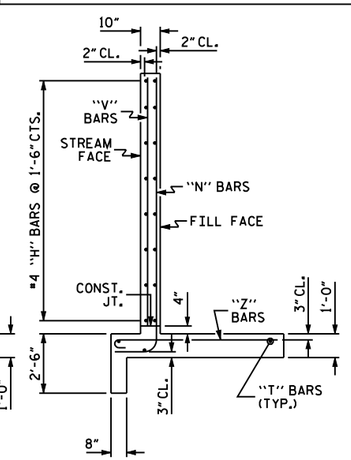

TYPICAL WING SECTION

BAR TYPES

ALL BAR DIMENSIONS ARE OUT TO OUT.

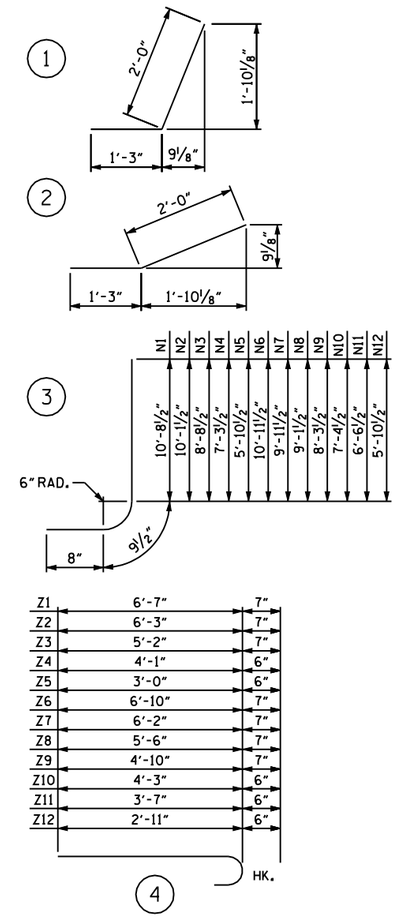

BILL OF MATERIAL

BAR	NO.	SIZE	TYPE	LENGTH	WEIGHT
H1	16	#4	STR	9'-7"	102
H2	4	#4	STR	7'-9"	21
H3	4	#4	STR	4'-7"	12
H4	32	#4	1	3'-3"	69
H5	4	#4	STR	10'-7"	28
H6	16	#4	STR	26'-7"	284
H7	4	#4	STR	21'-11"	59
H8	4	#4	STR	14'-0"	37
H9	4	#4	STR	6'-2"	16
H10	32	#4	2	3'-3"	69
H11	4	#4	STR	27'-11"	75
N1	4	#6	3	12'-2"	73
N2	4	#6	3	11'-7"	70
N3	8	#6	3	10'-2"	122
N4	8	#5	3	8'-9"	73
N5	8	#4	3	7'-4"	39
N6	4	#6	3	12'-5"	75
N7	14	#6	3	11'-5"	240
N8	12	#6	3	10'-7"	191
N9	12	#5	3	9'-9"	122
N10	12	#5	3	8'-10"	111
N11	12	#4	3	8'-0"	64
N12	12	#4	3	7'-4"	59
S1	12	#6	STR	6'-0"	108
T1	6	#5	STR	11'-6"	72
T2	6	#5	STR	28'-6"	178
V1	4	#4	STR	10'-1"	27
V2	4	#4	STR	9'-7"	26
V3	4	#4	STR	8'-2"	22
V4	4	#4	STR	6'-9"	18
V5	4	#4	STR	5'-4"	14
V6	4	#4	STR	10'-5"	28
V7	8	#4	STR	9'-5"	50
V8	6	#4	STR	8'-6"	34
V9	6	#4	STR	7'-8"	31
V10	6	#4	STR	6'-10"	27
V11	6	#4	STR	6'-0"	24
V12	6	#4	STR	5'-3"	21
Z1	4	#5	4	7'-2"	30
Z2	4	#5	4	6'-10"	29
Z3	8	#5	4	5'-9"	48
Z4	8	#4	4	4'-7"	24
Z5	8	#4	4	3'-6"	19
Z6	4	#5	4	7'-5"	31
Z7	14	#5	4	6'-9"	99
Z8	12	#5	4	6'-1"	76
Z9	12	#5	4	5'-5"	68
Z10	12	#4	4	4'-9"	38
Z11	12	#4	4	4'-1"	33
Z12	12	#4	4	3'-5"	27
REINFORCING STEEL FOR 4 WINGS					3213 LBS

CLASS A CONCRETE
4 WINGS 42.7 CY
2 HEADWALLS CY
2 END CURTAIN WALLS CY
TOTAL CY

PROJECT NO. _____

_____ COUNTY

STATION: _____

STATE OF NORTH CAROLINA
DEPARTMENT OF TRANSPORTATION
RALEIGH

STANDARD WINGS FOR CONCRETE BOX CULVERT

H = 10'-0" SLOPE = 2:1
45° OR 135° SKEW

REVISIONS						SHEET NO.
NO.	BY:	DATE:	NO.	BY:	DATE:	
1			3			TOTAL SHEETS
2			4			

ASSEMBLED BY : DATE :
CHECKED BY : DATE :

DRAWN BY : CCJ 01/00
CHECKED BY : RWW 03/00

STD. NO. CW4510