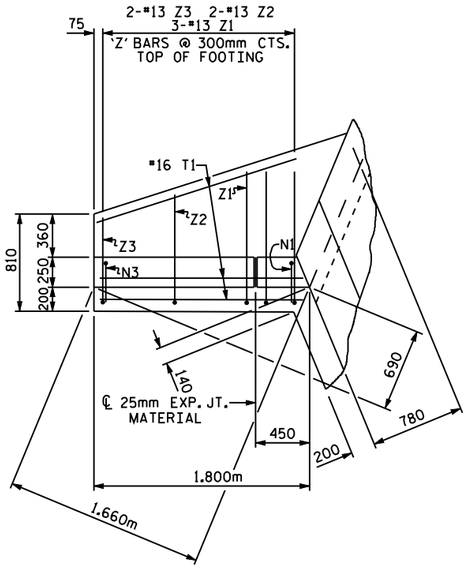

PLAN W2

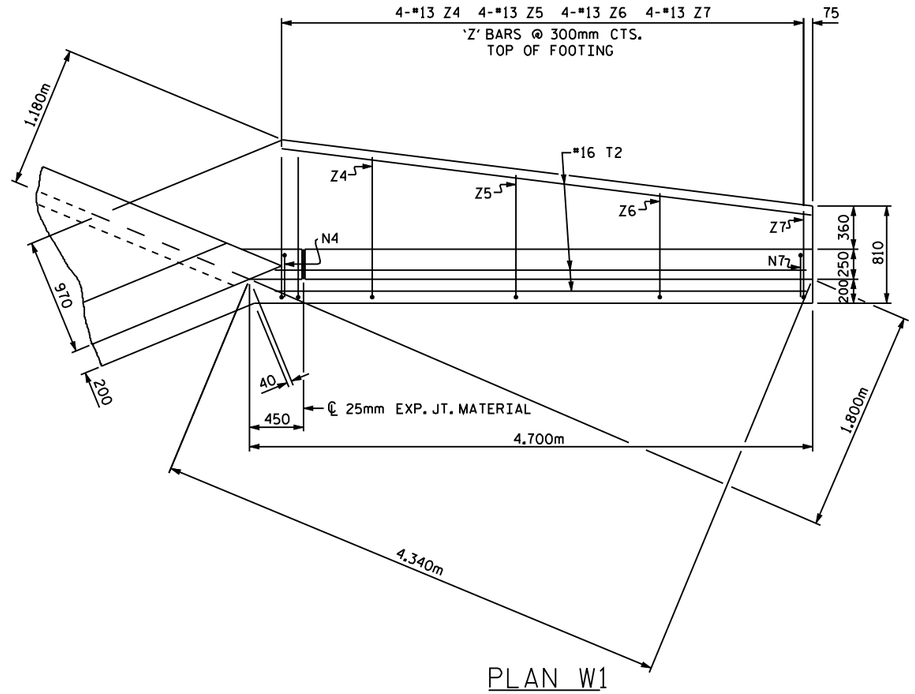

PLAN W1

BAR TYPES

ALL BAR DIMENSIONS ARE OUT TO OUT.

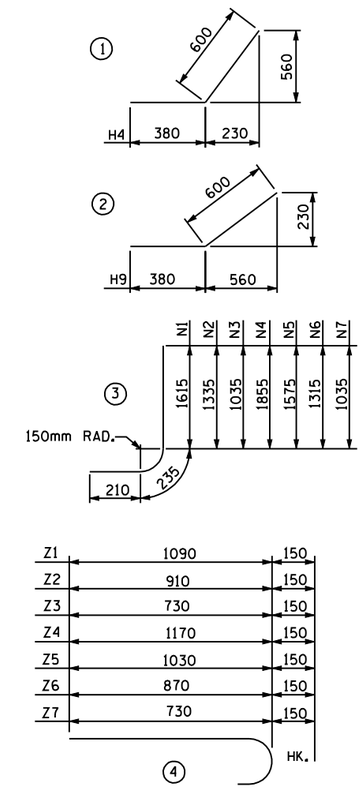

BILL OF MATERIAL

BAR	NO.	SIZE	TYPE	LENGTH	WEIGHT
H1	12	13	STR	1240	15
H2	4	13	STR	1060	4
H3	4	13	STR	400	2
H4	24	13	1	980	23
H5	4	13	STR	1360	5
H6	12	13	STR	4140	49
H7	4	13	STR	3780	15
H8	4	13	STR	2100	8
H9	24	13	2	980	23
H10	4	13	STR	4200	17
N1	6	13	3	2060	12
N2	4	13	3	1780	7
N3	4	13	3	1480	6
N4	4	13	3	2300	9
N5	8	13	3	2020	16
N6	10	13	3	1760	17
N7	10	13	3	1480	15
T1	6	16	STR	1800	17
T2	6	16	STR	4700	44
V1	6	13	STR	1440	9
V2	4	13	STR	1160	5
V3	4	13	STR	860	3
V4	4	13	STR	1680	7
V5	8	13	STR	1400	11
V6	10	13	STR	1140	11
V7	10	13	STR	860	9
Z1	6	13	4	1240	7
Z2	4	13	4	1060	4
Z3	4	13	4	880	3
Z4	8	13	4	1320	10
Z5	8	13	4	1180	9
Z6	8	13	4	1020	8
Z7	8	13	4	880	7

REINFORCING STEEL
FOR 4 WING WALLS 407 kg

CLASS A CONCRETE
4 WINGS 10.3 m^3
2 HEADWALLS _____ m^3
2 END CURTAIN WALLS _____ m^3
TOTAL _____ m^3

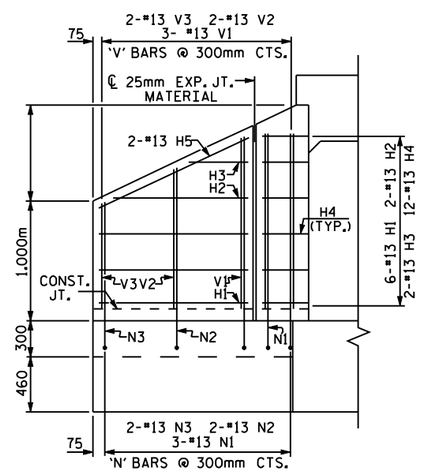

ELEVATION W2

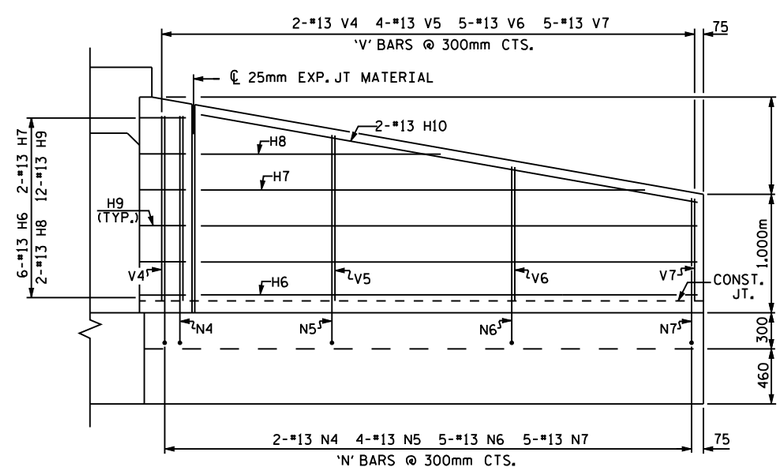

ELEVATION W1

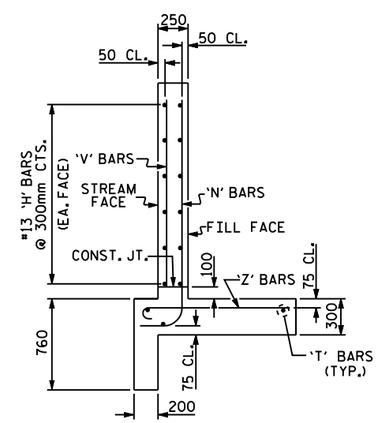

TYPICAL WING SECTION

FOR WING ORIENTATION, SEE BARREL STANDARD SHEET.

PROJECT NO. _____
_____ COUNTY
STATION: _____
SHEET OF

STATE OF NORTH CAROLINA
DEPARTMENT OF TRANSPORTATION
RALEIGH

STANDARD WINGS FOR CONCRETE BOX CULVERT

H=1.500m SLOPE=2:1
45° OR 135° SKEW

ASSEMBLED BY :	DATE :
CHECKED BY :	DATE :
DRAWN BY : KJA 7/97	
CHECKED BY : VAP 7/97	

REVISIONS						SHEET NO.
NO.	BY:	DATE:	NO.	BY:	DATE:	
1			3			TOTAL SHEETS
2			4			

STD. NO. CW4515