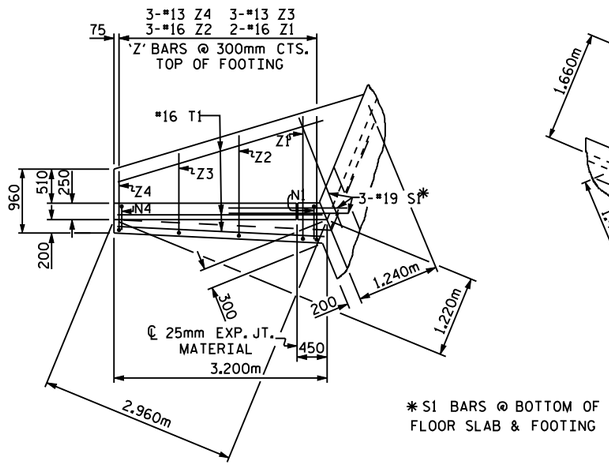

PLAN W2

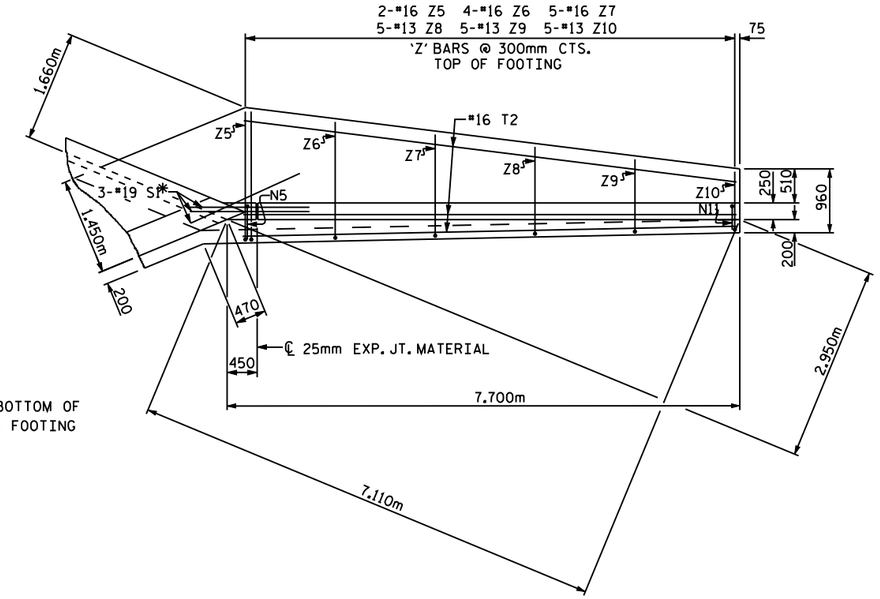

PLAN W1

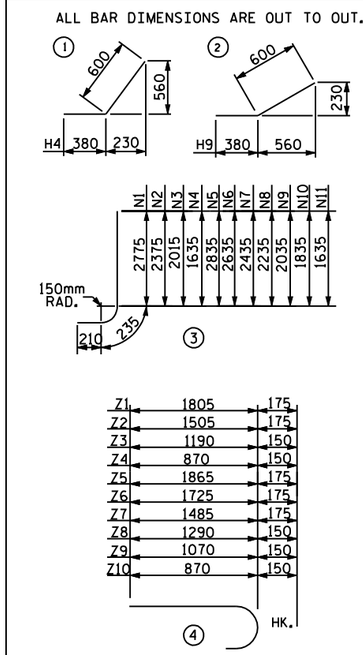

BAR TYPES

BILL OF MATERIAL

BAR	NO.	SIZE	TYPE	LENGTH	WEIGHT
H1	16	13	STR	2640	42
H2	4	13	STR	1840	7
H3	4	13	STR	780	3
H4	28	13	1	980	27
H5	4	13	STR	2860	11
H6	16	13	STR	7140	114
H7	4	13	STR	5140	20
H8	4	13	STR	2480	10
H9	28	13	2	980	27
H10	4	13	STR	7240	29
N1	4	19	3	3220	29
N2	6	19	3	2820	38
N3	6	16	3	2460	23
N4	6	13	3	2080	12
N5	4	19	3	3280	29
N6	8	19	3	3080	55
N7	8	19	3	2880	51
N8	8	16	3	2680	33
N9	8	16	3	2480	31
N10	8	16	3	2280	28
N11	8	13	3	2080	17
S1	12	19	STR	1800	48
T1	6	16	STR	3200	30
T2	6	16	STR	7700	72
V1	4	16	STR	2600	16
V2	6	16	STR	2200	20
V3	6	13	STR	1840	11
V4	6	13	STR	1460	9
V5	4	16	STR	2660	17
V6	8	16	STR	2460	31
V7	8	13	STR	2260	18
V8	8	13	STR	2060	16
V9	8	13	STR	1860	15
V10	8	13	STR	1660	13
V11	8	13	STR	1460	12
Z1	4	16	4	1980	12
Z2	6	16	4	1680	16
Z3	6	13	4	1340	8
Z4	6	13	4	1020	6
Z5	4	16	4	2040	13
Z6	8	16	4	1900	24
Z7	10	16	4	1660	26
Z8	10	13	4	1440	14
Z9	10	13	4	1220	12
Z10	10	13	4	1020	10

REINFORCING STEEL 1105 kg
FOR 4 WINGS
CLASS A CONCRETE
4 WINGS 25.5 m^3
2 HEADWALLS ____ m^3
2 END CURTAIN WALLS ____ m^3
TOTAL ____ m^3

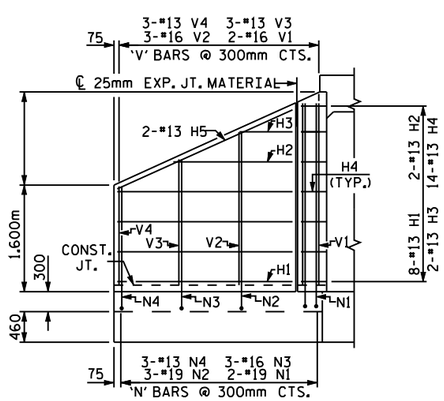

ELEVATION W2

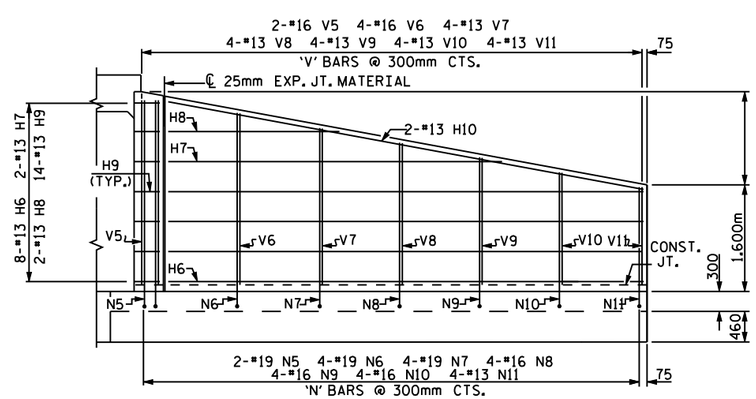

ELEVATION W1

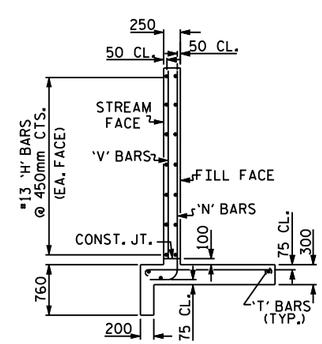

TYPICAL WING SECTION

FOR WING ORIENTATION, SEE BARREL STANDARD SHEET.

PROJECT NO. _____

_____ COUNTY

STATION: _____

SHEET OF

STATE OF NORTH CAROLINA
DEPARTMENT OF TRANSPORTATION
RALEIGH

STANDARD WINGS FOR CONCRETE BOX CULVERT H = 2.700m SLOPE 2:1 45° OR 135° SKEW

ASSEMBLED BY :	DATE :
CHECKED BY :	DATE :
DRAWN BY : KJA 7/97	
CHECKED BY : RH 11/98	

REVISIONS						SHEET NO.
NO.	BY:	DATE:	NO.	BY:	DATE:	
1			3			TOTAL SHEETS
2			4			

STD. NO. CW 4527