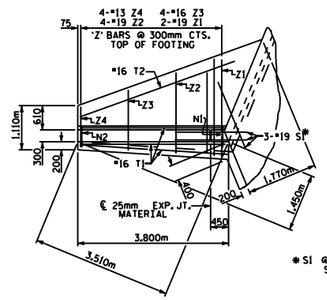

PLAN W2

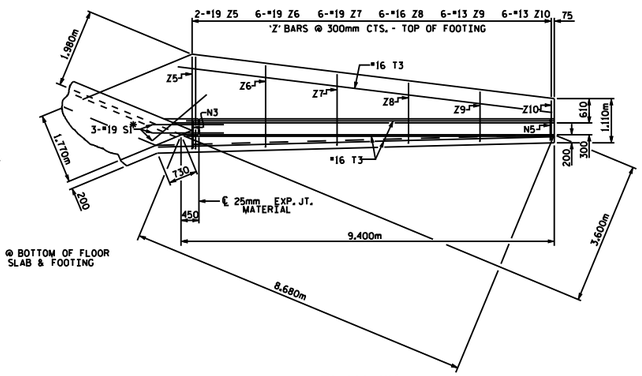

PLAN W1

* S1 @ BOTTOM OF FLOOR SLAB & FOOTING

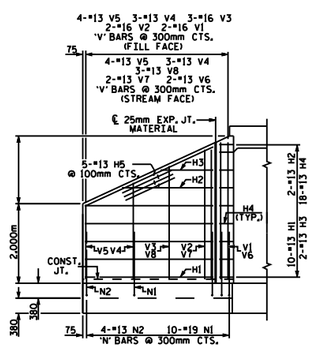

ELEVATION W2

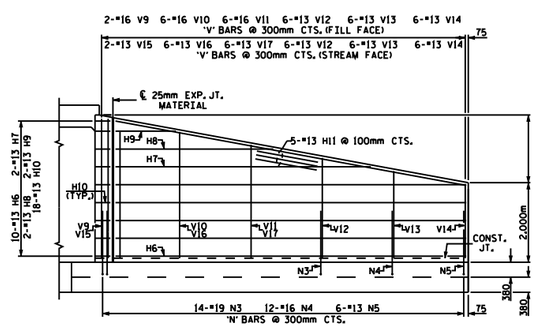

ELEVATION W1

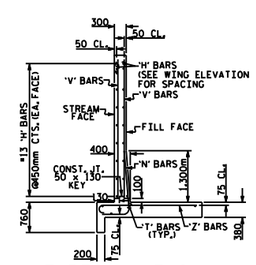

TYPICAL WING SECTION

FOR WING ORIENTATION, SEE BARREL STANDARD SHEET.

BAR TYPES

ALL BAR DIMENSIONS ARE OUT TO OUT.

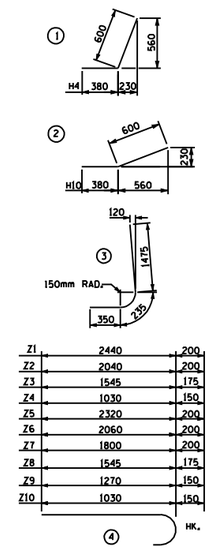

Z1	2440	200		
Z2	2040	200		
Z3	1545	175		
Z4	1030	150		
Z5	2320	200		
Z6	2060	200		
Z7	1800	200		
Z8	1545	175		
Z9	1270	150		
Z10	1030	150		

BILL OF MATERIAL

BAR	NO.	SIZE	TYPE	LENGTH	WEIGHT
H1	20	13	STR	3240	64
H2	4	13	STR	2280	9
H3	4	13	STR	1300	5
H4	36	13	1	980	35
H5	10	13	STR	3540	35
H6	20	13	STR	8840	176
H7	4	13	STR	6600	26
H8	4	13	STR	4160	17
H9	4	13	STR	1760	7
H10	36	13	2	980	35
H11	10	13	STR	8980	89
N1	20	19	3	2060	92
N2	8	13	3	2060	16
N3	28	19	3	2060	129
N4	24	16	3	2060	77
N5	12	13	3	2060	25
S1	12	19	STR	1800	48
T1	6	16	STR	3800	35
T2	2	16	STR	4160	13
T3	8	16	STR	9400	117
V1	4	16	STR	3420	21
V2	4	16	STR	3260	20
V3	6	16	STR	2840	26
V4	12	13	STR	2420	29
V5	16	13	STR	1880	30
V6	4	13	STR	3420	14
V7	4	13	STR	3260	13
V8	6	13	STR	2840	17
V9	4	16	STR	3520	22
V10	12	16	STR	3200	60
V11	12	16	STR	2860	53
V12	24	13	STR	2520	60
V13	24	13	STR	2200	52
V14	24	13	STR	1860	44
V15	4	13	STR	3520	14
V16	12	13	STR	3200	38
V17	12	13	STR	2860	34
Z1	4	19	4	2640	24
Z2	8	19	4	2240	40
Z3	8	16	4	1720	21
Z4	8	13	4	1180	9
Z5	4	19	4	2520	23
Z6	12	19	4	2260	61
Z7	12	19	4	2000	54
Z8	12	16	4	1720	32
Z9	12	13	4	1420	17
Z10	12	13	4	1180	14

REINFORCING STEEL FOR 4 WING WALLS 1892 kg

CLASS A CONCRETE

4 WINGS 47.0 m^3

2 HEADWALLS ____ m^3

2 END CURTAIN WALLS ____ m^3

TOTAL ____ m^3

PROJECT NO. ____

____ COUNTY

STATION: ____

SHEET OF

STATE OF NORTH CAROLINA
DEPARTMENT OF TRANSPORTATION
RALEIGH

STANDARD WINGS
FOR
CONCRETE BOX CULVERT
H = 3.400m SLOPE= 2 : 1
45° OR 135° SKEW

REVISIONS						SHEET NO.
NO.	BY:	DATE:	NO.	BY:	DATE:	TOTAL SHEETS
1			3			
2			4			

ASSEMBLED BY :		DATE :
CHECKED BY :		DATE :
DRAWN BY : FPP	07/97	
CHECKED BY : VAP	07/97	

STD. NO. CW4534