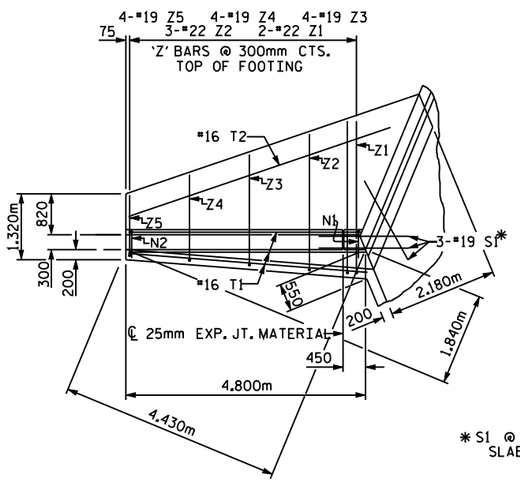

PLAN W2

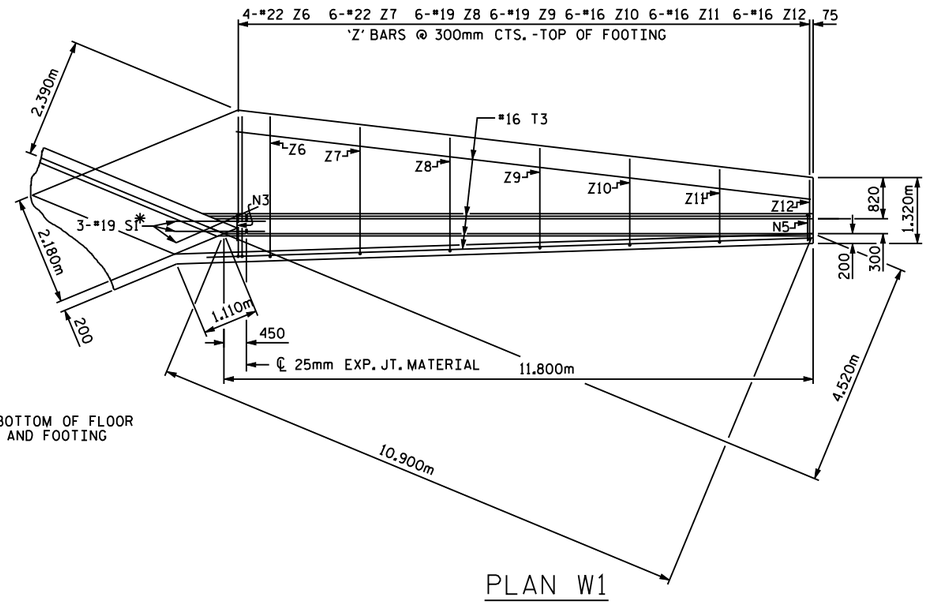

PLAN W1

* S1 @ BOTTOM OF FLOOR SLAB AND FOOTING

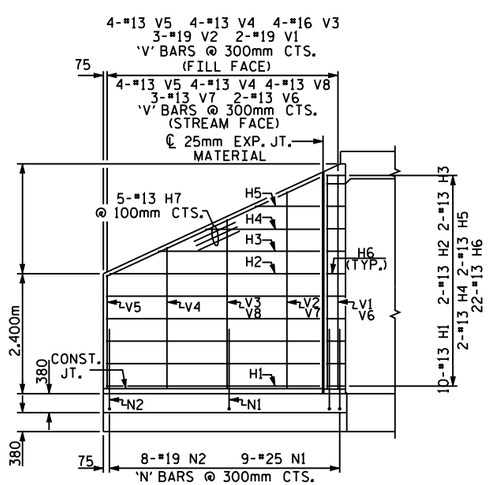

ELEVATION W2

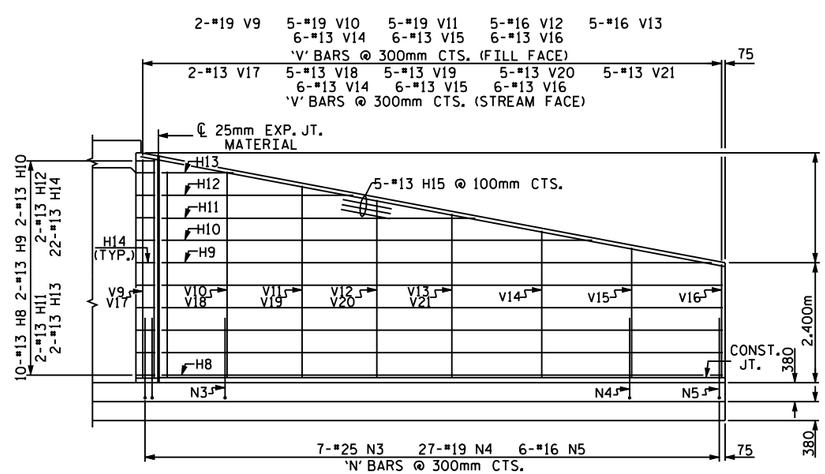

ELEVATION W1

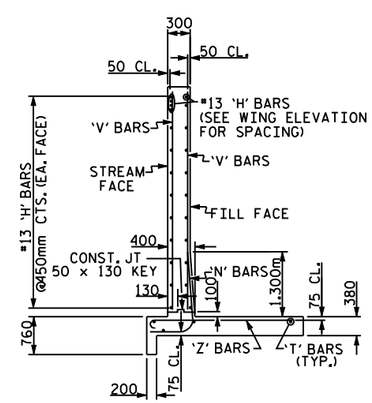

TYPICAL WING SECTION

FOR WING ORIENTATION, SEE BARREL STANDARD SHEET.

BAR TYPES

ALL BAR DIMENSIONS ARE OUT TO OUT.

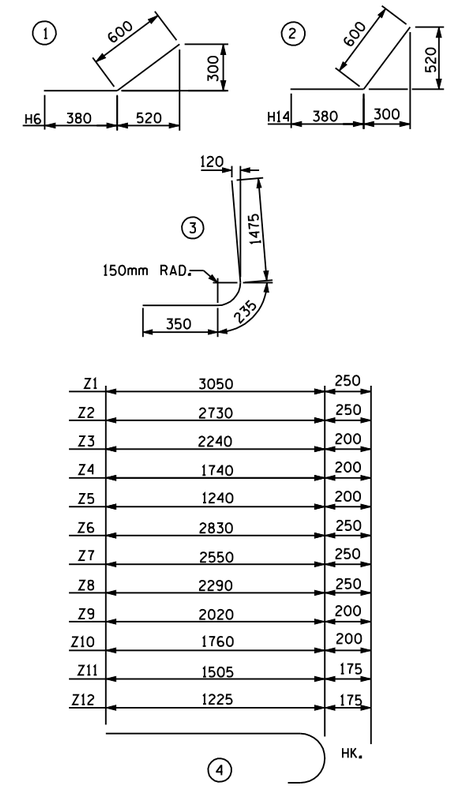

BILL OF MATERIAL

BAR	NO.	SIZE	TYPE	LENGTH	WEIGHT
H1	20	13	STR	4240	84
H2	4	13	STR	4160	17
H3	4	13	STR	3200	13
H4	4	13	STR	2220	9
H5	4	13	STR	1260	5
H6	44	13	1	980	43
H7	10	13	STR	4660	46
H8	20	13	STR	11240	223
H9	4	13	STR	11160	44
H10	4	13	STR	8780	35
H11	4	13	STR	6420	26
H12	4	13	STR	4040	16
H13	4	13	STR	1680	7
H14	44	13	2	980	43
H15	10	13	STR	11420	114
N1	18	25	3	2060	147
N2	16	19	3	2060	74
N3	14	25	3	2060	115
N4	54	19	3	2060	249
N5	12	16	3	2060	38
S1	12	19	STR	1800	48
T1	6	16	STR	4800	45
T2	2	16	STR	5540	17
T3	8	16	STR	11800	147
V1	4	19	STR	4320	39
V2	6	19	STR	3960	53
V3	8	16	STR	3400	42
V4	16	13	STR	2840	45
V5	16	13	STR	2280	36
V6	4	13	STR	4320	17
V7	6	13	STR	3960	24
V8	8	13	STR	3400	27
V9	4	19	STR	4420	40
V10	10	19	STR	4140	93
V11	10	19	STR	3860	86
V12	10	16	STR	3580	55
V13	10	16	STR	3280	51
V14	24	13	STR	2940	70
V15	24	13	STR	2600	62
V16	24	13	STR	2260	54
V17	4	13	STR	4420	18
V18	10	13	STR	4140	41
V19	10	13	STR	3860	38
V20	10	13	STR	3580	36
V21	10	13	STR	3280	33
Z1	4	22	4	3300	40
Z2	6	22	4	2980	54
Z3	8	19	4	2440	44
Z4	8	19	4	1940	35
Z5	8	19	4	1440	26
Z6	8	22	4	3080	75
Z7	12	22	4	2800	102
Z8	12	22	4	2540	93
Z9	12	19	4	2220	60
Z10	12	19	4	1960	53
Z11	12	16	4	1680	31
Z12	12	16	4	1400	26

REINFORCING STEEL
FOR 4 WINGS 3204 kg

CLASS A CONCRETE

4	WINGS	71.4 m^3
2	HEADWALLS	____ m^3
2	END CURTAIN WALLS	____ m^3
	TOTAL	____ m^3

PROJECT NO. _____

_____ COUNTY

STATION: _____

SHEET OF

STATE OF NORTH CAROLINA
DEPARTMENT OF TRANSPORTATION
RALEIGH

STANDARD WINGS FOR CONCRETE BOX CULVERT
H = 4.300m SLOPE = 2:1
45° OR 135° SKEW

REVISIONS						SHEET NO.
NO.	BY:	DATE:	NO.	BY:	DATE:	
1			3			TOTAL SHEETS
2			4			

ASSEMBLED BY : DATE :
CHECKED BY : DATE :

DRAWN BY : FPP 07/97
CHECKED BY : VAP 07/97

STD. NO. CW4543