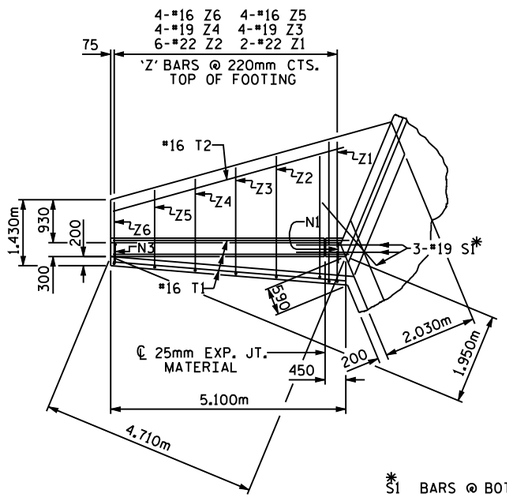

PLAN W2

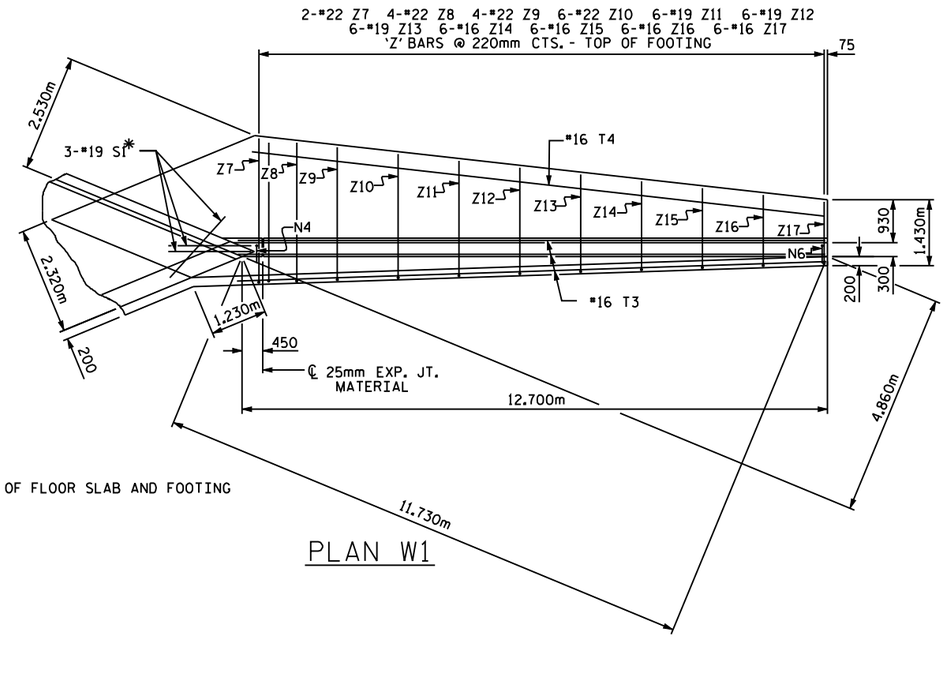

PLAN W1

* S1 BARS @ BOTTOM OF FLOOR SLAB AND FOOTING

BAR TYPES

ALL BAR DIMENSIONS ARE OUT TO OUT.

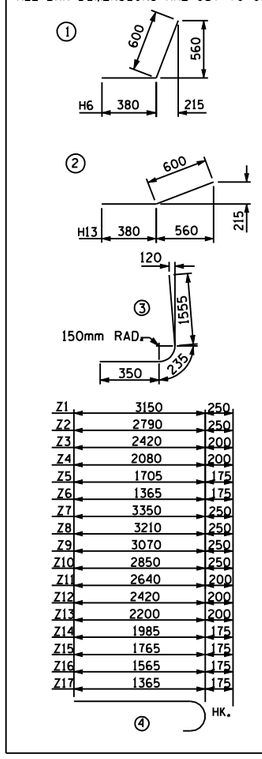

BILL OF MATERIAL

BAR	NO.	SIZE	TYPE	LENGTH	WEIGHT
H1	24	13	STR	4540	108
H2	4	13	STR	3920	16
H3	4	13	STR	2940	12
H4	4	13	STR	1960	8
H5	4	13	STR	980	4
H6	44	13	1	980	43
H7	10	13	STR	4980	50
H8	24	13	STR	12140	290
H9	4	13	STR	10700	43
H10	4	13	STR	8260	33
H11	4	13	STR	8260	33
H12	4	13	STR	5820	23
H13	44	13	2	980	43
H14	10	13	STR	12320	122
N1	16	25	3	2140	136
N2	16	22	3	2140	104
N3	16	16	3	2140	53
N4	34	25	3	2140	289
N5	36	22	3	2140	234
N6	48	16	3	2140	159
S1	12	19	STR	1800	48
T1	6	16	STR	5100	47
T2	2	16	STR	5260	16
T3	6	16	STR	12700	118
T4	2	16	STR	5260	16
V1	2	13	STR	4620	9
V2	6	13	STR	4100	24
V3	4	13	STR	3700	15
V4	4	13	STR	3280	13
V5	12	13	STR	2880	34
V6	12	13	STR	2480	30
V7	4	19	STR	4620	41
V8	12	19	STR	4100	110
V9	8	16	STR	3700	46
V10	8	16	STR	3280	41
V11	4	13	STR	4720	19
V12	4	13	STR	4580	18
V13	4	13	STR	4400	17
V14	6	13	STR	4160	25
V15	6	13	STR	3920	23
V16	6	13	STR	3680	22
V17	6	13	STR	3440	21
V18	18	13	STR	3200	57
V19	18	13	STR	2940	53
V20	18	13	STR	2700	48
V21	18	13	STR	2460	44
V22	4	19	STR	4720	42
V23	8	19	STR	4580	82
V24	8	19	STR	4400	79
V25	12	19	STR	4160	112
V26	12	16	STR	3920	73
V27	12	16	STR	3680	69
V28	12	16	STR	3440	64
Z1	6	22	4	3400	62
Z2	8	22	4	3040	74
Z3	8	19	4	2620	47
Z4	8	19	4	2280	41
Z5	8	16	4	1880	23
Z6	8	16	4	1540	19
Z7	4	22	4	3600	44
Z8	8	22	4	3460	84
Z9	8	22	4	3320	81
Z10	12	22	4	3100	113
Z11	12	19	4	2840	76
Z12	12	19	4	2620	70
Z13	12	19	4	2400	64
Z14	12	16	4	2160	40
Z15	12	16	4	1940	36
Z16	12	16	4	1740	32
Z17	12	16	4	1540	29

REINFORCING STEEL FOR 4 WING WALLS 4214 kg

CLASS A CONCRETE

4	WINGS	87.5 m^3
2	HEADWALLS	____ m^3
2	END CURTAIN WALLS	____ m^3
	TOTAL	____ m^3

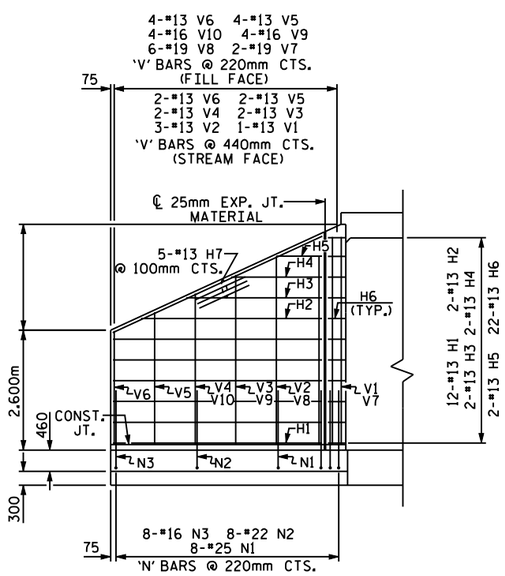

ELEVATION W2

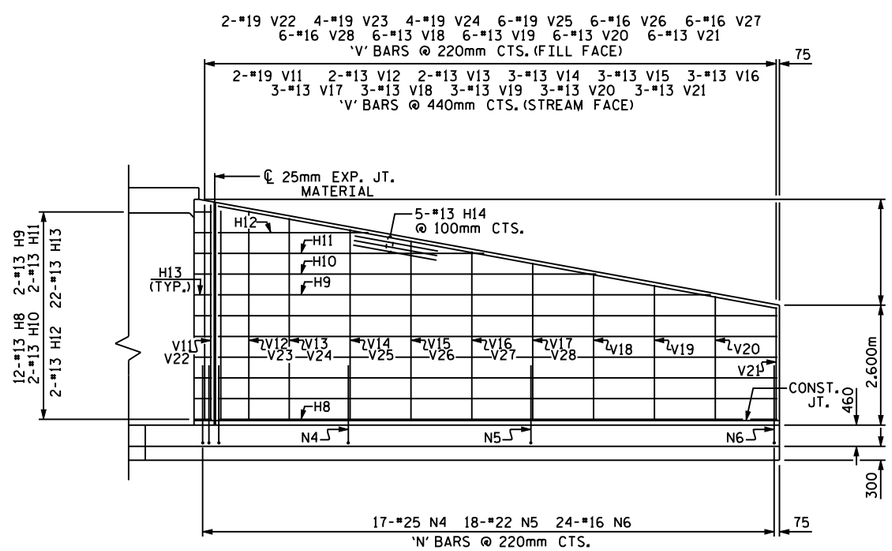

ELEVATION W1

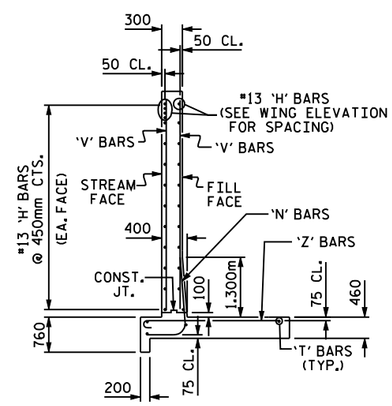

TYPICAL WING SECTION

FOR WING ORIENTATION, SEE BARREL STANDARD SHEET.

PROJECT NO. _____

_____ COUNTY

STATION: _____

SHEET OF

STATE OF NORTH CAROLINA
DEPARTMENT OF TRANSPORTATION
RALEIGH

STANDARD WINGS FOR CONCRETE BOX CULVERT

H=4.600m SLOPE=2:1
45° OR 135° SKEW

ASSEMBLED BY :	DATE :
CHECKED BY :	DATE :
DRAWN BY : JLR 7/97	
CHECKED BY : VAP 7/97	

REVISIONS						SHEET NO.
NO.	BY:	DATE:	NO.	BY:	DATE:	
1			3			TOTAL SHEETS
2			4			

STD. NO. CW4546