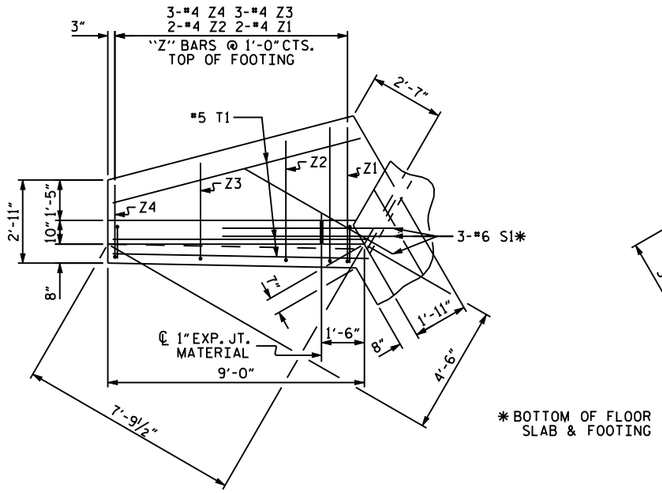

PLAN W2

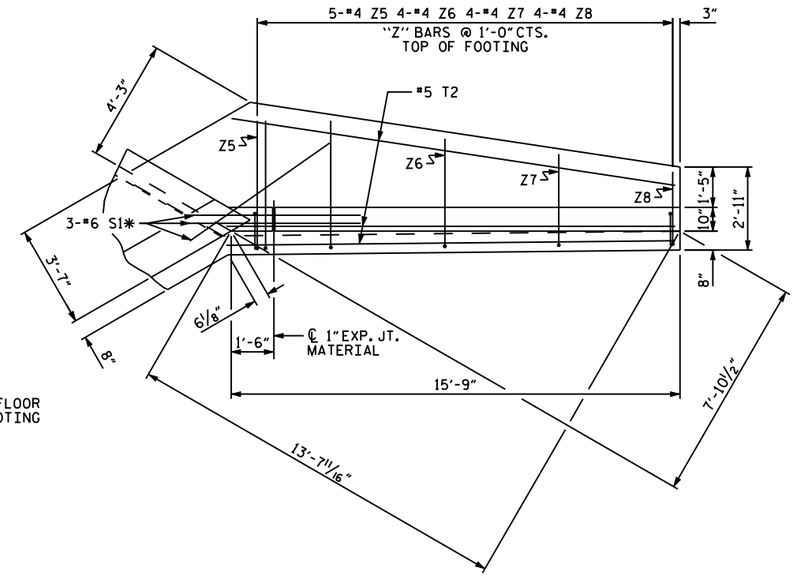

PLAN W1

* BOTTOM OF FLOOR SLAB & FOOTING

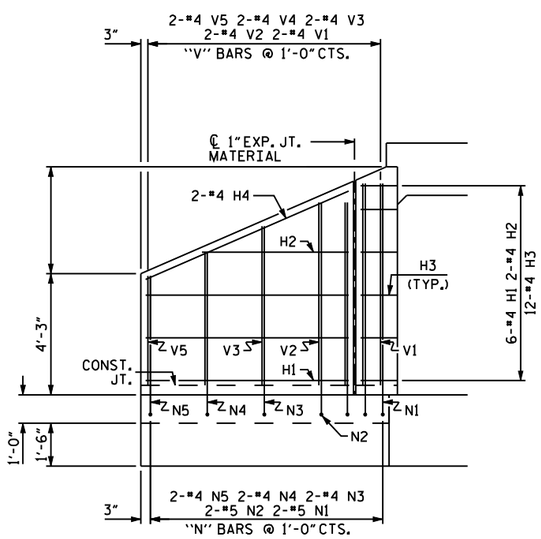

ELEVATION W2

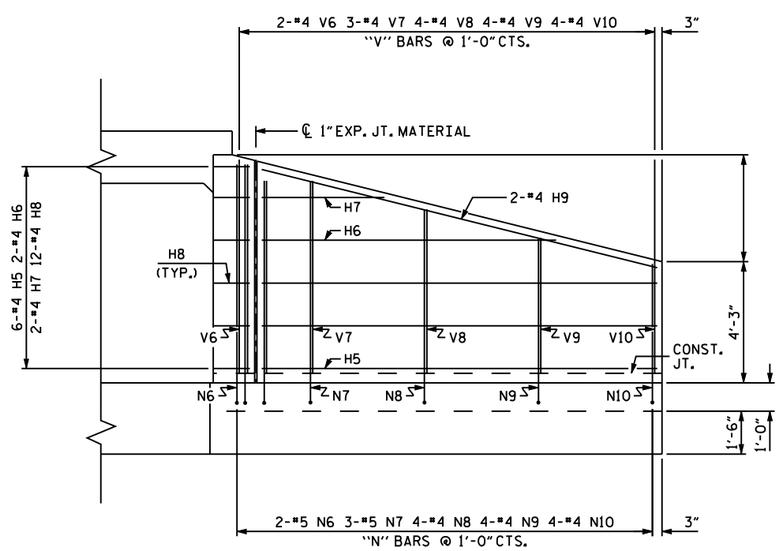

ELEVATION W1

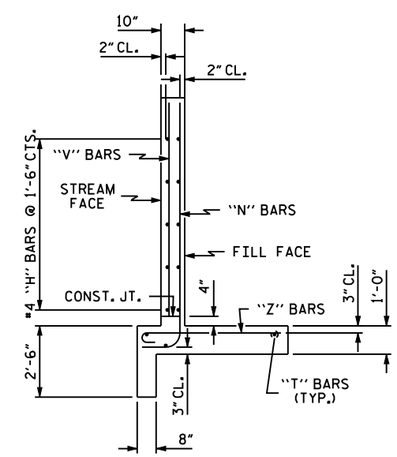

TYPICAL WING SECTION

BAR TYPES

ALL BAR DIMENSIONS ARE OUT TO OUT.

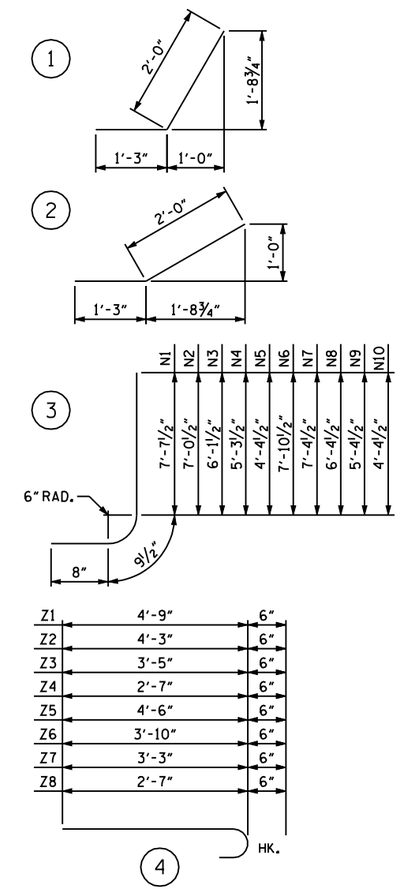

BILL OF MATERIAL

BAR	NO.	SIZE	TYPE	LENGTH	WEIGHT
H1	12	#4	STR	7'-1"	57
H2	4	#4	STR	5'-2"	14
H3	24	#4	1	3'-3"	52
H4	4	#4	STR	7'-9"	21
H5	12	#4	STR	13'-10"	111
H6	4	#4	STR	10'-4"	28
H7	4	#4	STR	4'-3"	11
H8	24	#4	2	3'-3"	52
H9	4	#4	STR	14'-3"	38
N1	4	#5	3	9'-1"	38
N2	4	#5	3	8'-6"	35
N3	4	#4	3	7'-7"	20
N4	4	#4	3	6'-9"	18
N5	4	#4	3	5'-10"	16
N6	4	#5	3	9'-4"	39
N7	6	#5	3	8'-10"	55
N8	8	#4	3	7'-10"	42
N9	8	#4	3	6'-10"	37
N10	8	#4	3	5'-10"	31
S1	12	#6	STR	6'-0"	108
T1	6	#5	STR	9'-0"	56
T2	6	#5	STR	15'-9"	99
V1	4	#4	STR	7'-1"	19
V2	4	#4	STR	6'-5"	17
V3	4	#4	STR	5'-7"	15
V4	4	#4	STR	4'-8"	12
V5	4	#4	STR	3'-10"	10
V6	4	#4	STR	7'-4"	20
V7	6	#4	STR	6'-9"	27
V8	8	#4	STR	5'-9"	31
V9	8	#4	STR	4'-9"	25
V10	8	#4	STR	3'-10"	20
Z1	4	#4	4	5'-3"	14
Z2	4	#4	4	4'-9"	13
Z3	6	#4	4	3'-11"	16
Z4	6	#4	4	3'-1"	12
Z5	10	#4	4	5'-0"	33
Z6	8	#4	4	4'-4"	23
Z7	8	#4	4	3'-9"	20
Z8	8	#4	4	3'-1"	16

REINFORCING STEEL FOR 4 WINGS 1321 LBS

CLASS A CONCRETE
4 WINGS 19.8 CY
2 HEADWALLS CY
2 END CURTAIN WALLS CY
TOTAL CY

PROJECT NO. _____

_____ COUNTY

STATION: _____

STATE OF NORTH CAROLINA
DEPARTMENT OF TRANSPORTATION
RALEIGH

STANDARD WINGS FOR CONCRETE BOX CULVERT

H = 7'-0" SLOPE = 2:1
60° OR 120° SKEW

REVISIONS						SHEET NO.
NO.	BY:	DATE:	NO.	BY:	DATE:	
1			3			TOTAL SHEETS
2			4			

ASSEMBLED BY : DATE :
CHECKED BY : DATE :

DRAWN BY : CCJ 11/99
CHECKED BY : RWW 03/00

STD. NO. CW6007