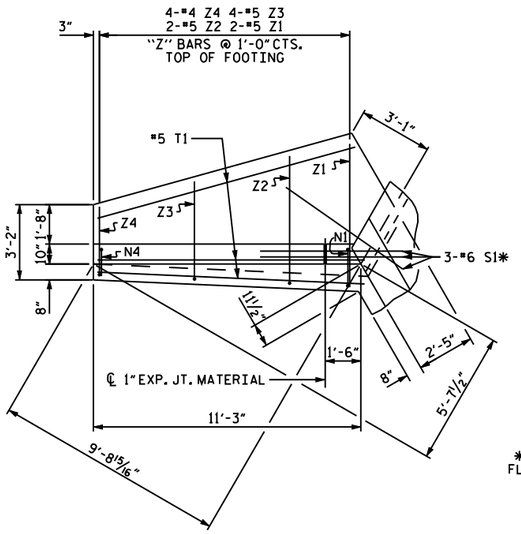

PLAN W2

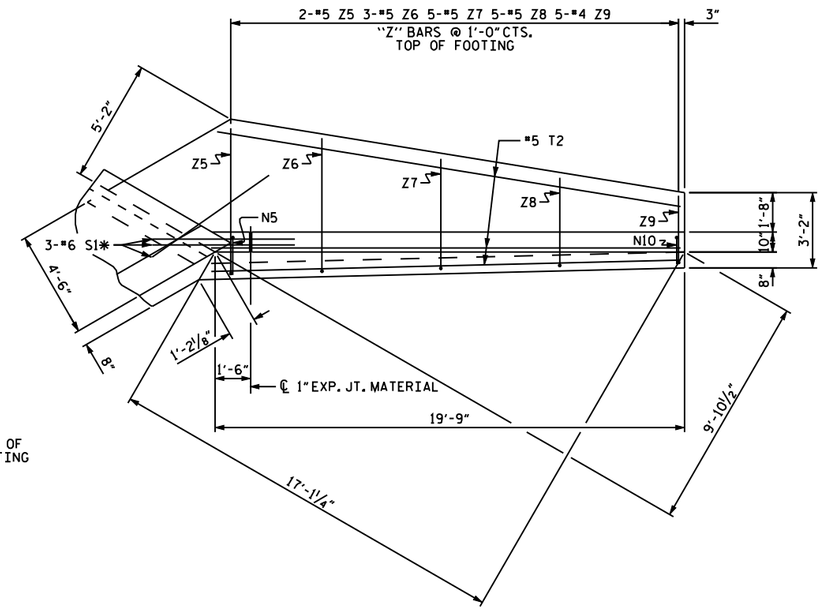

PLAN W1

* S1 BARS @ BOTTOM OF FLOOR SLAB AND FOOTING

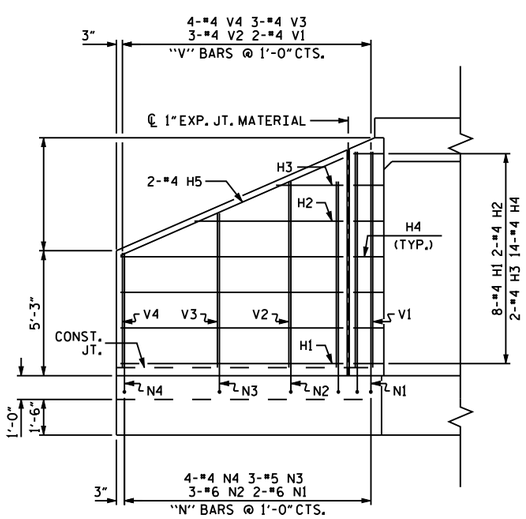

ELEVATION W2

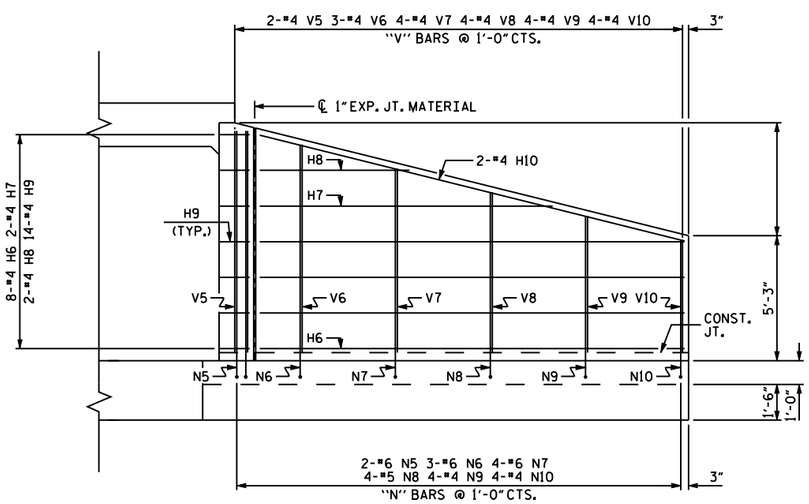

ELEVATION W1

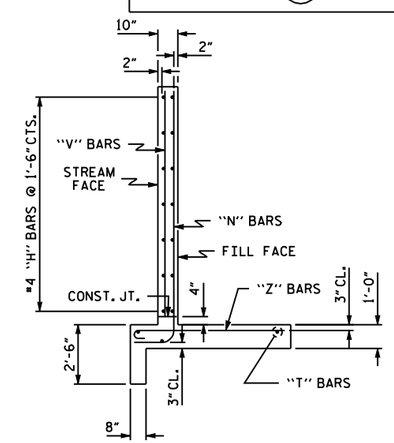

TYPICAL WING SECTION

BAR TYPES

ALL BAR DIMENSIONS ARE OUT TO OUT.

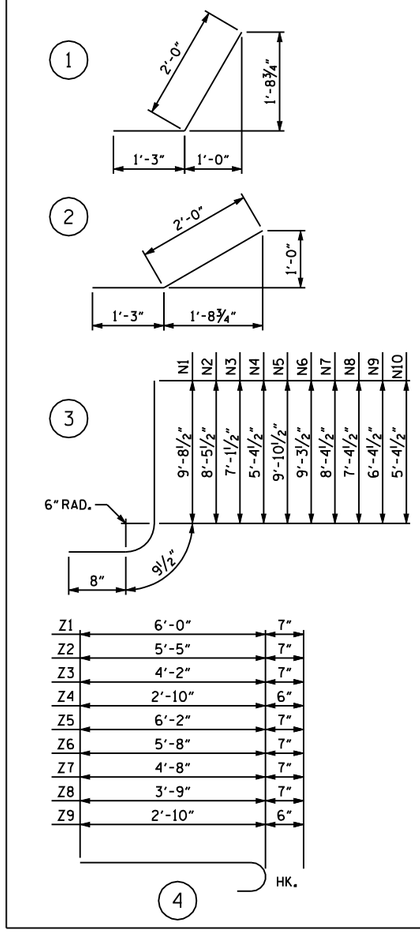

BILL OF MATERIAL

BAR	NO.	SIZE	TYPE	LENGTH	WEIGHT
H1	16	#4	STR	9'-4"	100
H2	4	#4	STR	6'-3"	17
H3	4	#4	STR	2'-10"	8
H4	28	#4	1	3'-3"	61
H5	4	#4	STR	10'-2"	27
H6	16	#4	STR	17'-10"	191
H7	4	#4	STR	12'-4"	33
H8	4	#4	STR	6'-3"	17
H9	28	#4	2	3'-3"	61
H10	4	#4	STR	18'-5"	49
N1	4	#6	3	11'-2"	67
N2	6	#6	3	9'-11"	89
N3	6	#5	3	8'-7"	54
N4	8	#4	3	6'-10"	37
N5	4	#6	3	11'-4"	68
N6	6	#6	3	10'-9"	97
N7	8	#6	3	9'-10"	118
N8	8	#5	3	8'-10"	74
N9	8	#4	3	7'-10"	42
N10	8	#4	3	6'-10"	37
S1	12	#6	STR	6'-0"	108
T1	6	#5	STR	11'-3"	70
T2	6	#5	STR	19'-9"	124
V1	4	#4	STR	9'-1"	24
V2	6	#4	STR	7'-10"	31
V3	6	#4	STR	6'-6"	26
V4	8	#4	STR	4'-10"	26
V5	4	#4	STR	9'-4"	25
V6	6	#4	STR	8'-9"	35
V7	8	#4	STR	7'-9"	41
V8	8	#4	STR	6'-9"	36
V9	8	#4	STR	5'-9"	31
V10	8	#4	STR	4'-9"	25
Z1	4	#5	4	6'-7"	27
Z2	4	#5	4	6'-0"	25
Z3	8	#5	4	4'-9"	40
Z4	8	#4	4	3'-4"	18
Z5	4	#5	4	6'-9"	28
Z6	6	#5	4	6'-3"	39
Z7	10	#5	4	5'-3"	55
Z8	10	#5	4	4'-4"	45
Z9	10	#4	4	3'-4"	22

REINFORCING STEEL FOR 4 WINGS 2148 LBS

CLASS A CONCRETE
4 WINGS 30.2 CY
2 HEADWALLS CY
2 END CURTAIN WALLS CY
TOTAL CY

PROJECT NO. _____

_____ COUNTY

STATION: _____

STATE OF NORTH CAROLINA
DEPARTMENT OF TRANSPORTATION
RALEIGH

STANDARD WINGS FOR CONCRETE BOX CULVERT

H = 9'-0" SLOPE = 2:1
60° OR 120° SKEW

REVISIONS						SHEET NO.
NO.	BY:	DATE:	NO.	BY:	DATE:	
1			3			TOTAL SHEETS
2			4			

STD. NO. CW6009

ASSEMBLED BY :	DATE :
CHECKED BY :	DATE :
DRAWN BY : CCJ 12/99	
CHECKED BY : RWW 03/00	